BIRLA

Call No. 622.7
T125
1954
v.1

Accession No. 114026

HANDBOOK OF MINERAL DRESSING

ORES AND INDUSTRIAL MINERALS

WILEY ENGINEERING HANDBOOK SERIES

HANDBOOK OF ENGINEERING MATERIALS. Edited by DOUGLAS F. MINER and JOHN B. SEASTONE.

HANDBOOK OF ENGINEERING FUNDAMENTALS. Second Edition. Edited by OVID W. ESHBACH.

KENT'S MECHANICAL ENGINEERS' HANDBOOK. Twelfth Edition.

DESIGN AND PRODUCTION. Edited by COLIN CARMICHAEL.

POWER. Edited by J. K. SALISBURY.

ELECTRICAL ENGINEERS' HANDBOOK. Fourth Edition.

ELECTRIC POWER. Edited by HAROLD PENDER and WILLIAM A. DEL MAR.

ELECTRIC COMMUNICATION AND ELECTRONICS. Edited by HAROLD PENDER and KNOX MCILWAIN.

MINING ENGINEERS' HANDBOOK. Third Edition. Edited by the late ROBERT PEELE.

HANDBOOK OF MINERAL DRESSING.

ORES AND INDUSTRIAL MINERALS. Edited by ARTHUR F. TAGGART.

ELEMENTS OF ORE DRESSING. ARTHUR F. TAGGART.

HANDBOOK
OF
MINERAL DRESSING

ORES AND INDUSTRIAL MINERALS

BY

ARTHUR F. TAGGART

VINTON PROFESSOR EMERITUS OF MINING, SCHOOL OF MINES
COLUMBIA UNIVERSITY

CONTRIBUTORS

HENRY A. BEHRE
CHARLES H. BREERWOOD
JOHN M. CALLOW
DORR CO. ENGINEERING STAFF
FRANCIS E. FINCH
T. A. FRANKISH
HARLOWE HARDINGE
MENELAOS D. HASSIALIS
DONALD F. IRVIN
EDWARD K. JUDD
PERCEY F. SMITH
E. J. TOURNIER
PAUL M. TYLER

JOHN WILEY & SONS, INC.
NEW YORK · LONDON · SYDNEY

COPYRIGHT, 1927
BY
ARTHUR F. TAGGART
(under the title of *Handbook of Ore Dressing*)

1927 COPYRIGHT RENEWED 1954
BY
ARTHUR F. TAGGART

COPYRIGHT, 1945
BY
ARTHUR F. TAGGART

All Rights Reserved

This book or any part thereof must not be reproduced in any form without the written permission of the publisher.

20 19 18 17 16 15 14 13 12

PRINTED IN THE UNITED STATES OF AMERICA

PREFACE

This is Volume I of a *Handbook of Mineral Dressing*. As such it deals with the processes, largely mechanical, involved in the concentration of metalliferous ores and the beneficiation of industrial minerals. Volume II is planned to treat of the preparation of fuels and of the methods, mostly chemical, by which metalliferous and nonmetallic concentrates are rendered into primary-consumer products. The two volumes are planned thus to constitute a compendium of the arts by means of which the mineral crust of the earth is converted into the forms that are utilized by manufacturers and, in some cases, by ultimate consumers.

The predecessor volume, *Handbook of Ore Dressing*, suffered the usual fate of technical handbooks. It appeared at the beginning of several revolutionary changes in practice, *e.g.*, the general adoption of the cone-type crusher; the substitution of subaeration and matless flotation cells for agitation-froth and mat-type machines; and the almost universal change-over to soluble collectors in floating sulphide ores. Hence it was out of date in important particulars almost as soon as it appeared. Possibly—probably—the present volume will meet the same fate. Perhaps that is what the engineer should wish for, since it is a concomitant of progress.

Revision has involved complete or substantial rewriting of somewhat more than half of the first edition, comprising the sections on Metallic Minerals, Grinding, Flotation, and Sampling and Testing. Upward of 30 to 50 per cent. of the material of the sections on Crushing, Screening, Washing, Gravity Concentration, Electrical Concentration, Miscellaneous Methods of Concentration, and Storage and Transport of Materials has been rewritten. New sections have been added dealing with Industrial Minerals, Cement, Dust Collection and Air Sizing, and Dry Grinding. The remaining technical sections have been revised sufficiently to bring them up to date. The general sections, with the exception of that on Mathematics, have been omitted in view of the publication of the *Handbook of Engineering Fundamentals*, by O. W. Eshbach.

The general plan of presentation is the same as was followed in the predecessor volume, with the theme carried in larger type, and supplementary text, examples, operating data, and the like in small type. References, printed in italics in the running text, are in the form adopted in legal writing, with volume number, abbreviation of the periodical, and page number set down in the named order. Table 4S, Sec. 22, gives the interpretations of the reference abbreviations in those cases where these are not apparent on the face.

In engineering, practice is the best index of expectable performance. Established laws enable the informed scientist to predict with reasonable accuracy what will occur in a physical system that can be defined completely. But such systems are, of necessity, simple. Technical operations, even the least complex, involve numerous components and conditions that are not only indefinable but are frequently not even recognized as present. Under such circumstances prediction is possible only by study of similar technology, in which there are present essential controlling conditions that parallel those in the case in question. It is the function of an engineering handbook to record such illustrative practices and to point out what appear to be the controlling conditions. It is the task of the editors to make such selection from the mass of data available that reasonably representative coverage is effected; to be fairly critical to the end that experiment unverified by field performance is not given the same weight as established tonnage-producing operation, nor is record of such experiment denied a place because it runs counter to personal predilection; to have the courage both to hazard new generalization when conditions seem to warrant such action, and to criticize generally accepted practice if such action seems indicated. These are the principles which underlie the present volume.

Costs as given in the text are specifically dated or the date indicated by the context. They may usually be related to present time by a multiplier representing the ratio of combined labor and commodity index figures for the published date and the present.

The editor records with regret the deaths, since publication of the earlier work, of four of his associate editors: Frederick E. Beach, John M. Callow, R. C. Canby, and Percey F. Smith. Mr. Callow's death occurred after he had completed the revision of his manuscript for the present volume.

Much of the source material for the flowsheets in Section 2 and for many of the operating data in the other sections was in the form of answers to elaborate questionnaires sent out by the editor and graciously filled in and returned by busy men in the field. Acknowledgment has been made by name in Section 2 wherever possible. But the editor wishes here to express thanks not only to those named but to the many not named who, through formal questionnaires, through letters, as courteous guides in their mills, in conversations in divers places, and by publication in the technical press, have made their experiences available and thereby made this book possible. No one who has not tried to write a technical handbook, or a part thereof, realizes how little he or any other one person knows about the subject that he considers his specialty. Hence this work is dedicated

To My Colleagues Everywhere

In Appreciation

Of Their Generous Help

Arthur F. Taggart

Columbia University
New York
September 1944

TABLE OF CONTENTS

PAGES

Sec. 1. INTRODUCTION 01–04

Sec. 2. METALLIC MINERALS 01–267
Uses. Ores. Production. Treatment schemes. Selling.

Sec. 3. INDUSTRIAL MINERALS 01–124
Properties. Uses. Crudes. Production. Treatment schemes. Selling.

Sec. 3A. CEMENT 01–42
Chemistry. Specifications. Production. Preparation of raw materials. Burning. Grinding. Handling. Selling. Flowsheets.

Sec. 4. CRUSHING 01–101
Jaw and gyratory crushers. Sledging rolls. Gyratory-type secondary crushers. Rolls. Hammer mills. Stamps. Crushing plants. Operation. Performances.

Sec. 5. WET GRINDING 01–133
Mechanism of tumbling. Construction of tumbling mills. Rod mills. Ball mills. Tube mills. Operation of tumbling mills. Chilean mills. Huntington mills. Grinding pans. Operation. Performances.

Sec. 6. DRY GRINDING 01–54
Buhr and attrition mills. Impact mills. Jet pulverizer. Roller mills. Ball-bearing mills. Rod mills. Ball mills. Tube mills. Compartment mills. Operation. Performances.

Sec. 7. SCREEN SIZING 01–72
Screening surfaces. Grizzlies and fixed screens. Revolving screens. Shaking screens. Vibrating screens. Screening efficiency. Capacity.

Sec. 8. CLASSIFICATION WITH WATER 01–61
Principles of classification. Mechanical classifiers. Sand and slime tanks. Hydraulic classifiers. Operation. Performances.

Sec. 9. AIR SIZING AND DUST COLLECTION 01–37
Principles of suspension in air. Gravitational separators. Inertial separators. Filters. Washers. Electrical precipitation. Dust-collecting systems. Pneumatic conveying.

Sec. 10. WASHING AND SCRUBBING 01–16
Jet, tumbling, and stirring scrubbers. Sand scrubbing. Screening and classifier washers.

Sec. 11. GRAVITY CONCENTRATION 01–140
Principles. Jigs. Shaking tables. Vanners. Sluice. Sink-float separation. Film sizing. Pneumatic concentration.

Sec. 12. FLOTATION 01–130
History. Collection. Conditioning. Levitation. Machines and processes. Operation. Flowsheets. Performances.

Sec. 13. ELECTRICAL CONCENTRATION 01–47
Principles of magnetic separation. Drum separators. Pulley separators. Belt separators. Wet magnetic separation. Roasting to magnetize. Guard magnets. Magnetic flocculation and deflocculation. Principles of electrostatic separation. Electrostatic separators.

PAGES

Sec. 14. MISCELLANEOUS METHODS OF CONCENTRATION 01–24
Hand sorting. Mechanical pickers. Amalgamation. Differential disintegration. Differential phase change.

Sec. 15. DEWATERING 01–26
Principles. Draining. Intermittent and continuous gravitational thickeners. Filter thickeners. Washing in thickeners.

Sec. 16. FILTRATION 01–22
Principles. Filter medium. Vacuum filters. Pressure filters. Sand filters. Centrifugal filters.

Sec. 17. DRYING 01–19
Principles. Hearth drier. Shaft driers. Operation. Design of driers.

Sec. 18. STORAGE AND MILL TRANSPORT 01–107
Bins. Gates. Ground storage. Conveyors. Elevators. Chutes. Launders. Pumps. Feeders. Distributors.

Sec. 19. SAMPLING AND TESTING 01–208
Principles of sampling. Hand sampling. Sampling machines. Tonnage and moisture determination. Mill sampling. Custom-sampling mills. Microscopy. Photography. Grindability. Sizing. Sink-float separation. Testing for a flowsheet. Ore-testing apparatus and procedures. Amalgamation and cyanidation. Milling calculations.

Sec. 20. DESIGN AND CONSTRUCTION OF ORE-TREATMENT PLANTS 01–96
Location of mill. Water supply. Tailing disposal. Topography of millsite. Mill construction. Power. Lighting. Heating. Fire protection. Dust collection. Shops. Cost estimating.

Sec. 21. MATHEMATICS 01–62
Arithmetic. Algebra. Elementary geometry. Trigonometry. Analytic geometry. Calculus. Derivation of empirical formulas.

Sec. 22. MATHEMATICAL AND MISCELLANEOUS TABLES 01–76
Powers and roots. Reciprocals. Areas and volumes. Angle measurement. Trigonometric functions. Logarithms. Interest, discount, and annuities. Equivalents. Composition and specific gravity of minerals. Abbreviations.

INDEX 1–47

SECTION 1

INTRODUCTION

Mineral dressing is the art of treating the crude crust of the earth to produce therefrom the primary-consumer derivatives. The essential operation in all such processes is separation of one or more valuable desired constituents of the crude from the undesired contaminants with which it occurs associated. Mineral dressing has three principal branches, *viz.*: ORE DRESSING, which comprises the methods of separation of solid inorganic crudes by means which do not effect substantial chemical change; EXTRACTIVE METALLURGY, which utilizes chemical reaction for separation of the constituents of solid inorganic crudes; and FUEL TECHNOLOGY, which employs both physical and chemical methods for separation and rearrangement of liquid and solid carbonaceous crudes. The magnitude and expanse of the art may be judged by reference to Fig. 1, this section, and Figs. 6 and 7, Sec. 2.

Mineral dressing is to be looked upon primarily as a manufacturing process for which the raw material is the crude, and the finished product is that derivative thereof which best supplies the demand of the primary consumer. From such a viewpoint a plant manager should be conversant equally with the technology of production, the product potentialities of his crude, the geographical distribution of his markets, their demand potentialities, the specifications prevailing, and the expectable trend of prices. This means that, as of the past, he should know the ultimate uses of present and potential products, the ability of the markets to absorb new production, the possibility and availability of substitutes, production and price histories, and the economic significance of quality. As of the late thirties, in the United States, however, the demands imposed on executive time by bureaucratic inquisition, and in bargaining with labor, were so great that study of even broad questions of technical policy were, of necessity, largely delegated, primary markets only could be followed, and expansion lagged not only from nonrecognition of possibilities, but also from lack of incentive to search for them.

Definitions. A CRUDE is any mixture of minerals in the form in which it occurs as a part of the earth's crust. An ORE is a solid crude containing a valuable constituent in such amounts as to constitute a promise of possible profit in extraction, treatment, and sale. The valuable constituent of an ore is ordinarily called VALUABLE MINERAL, or often just MINERAL; the associated worthless material is called GANGUE. In some ores the mineral is in the chemical state in which it is desired by primary consumers, *e.g.*, graphite, sulphur, asbestos, talc, garnet; in fact this is true of the majority of nonmetallic minerals; in metallic ores, however, the valuable mineral is rarely the product desired by the consumer, and chemical treatment of such mineral is a necessary step in the process of beneficiation. In such cases the sales product is usually the result of concentration by the methods of ore dressing, followed by further concentration by the chemical methods of metallurgy. The valuable product of the ore-dressing treatment is called CONCENTRATE; the discarded waste is TAILING.

Concentrate is, in most cases, the feed to the metallurgical plant. If the metallurgical process is one in which separation is effected in a melt, the process is called SMELTING; if the separation is effected by differential or selective solution, the process is LEACHING or LIXIVIATION; where the process is one of selective vaporization, it is called RETORTING. The valuable metal product of smelting is usually differently named according to the metal involved, *e.g.*, BLISTER (copper), BASE BULLION (lead), PIG (iron), etc.; the waste is SLAG.

The crudes of fuel technology are RAW COAL and CRUDE PETROLEUM; treated coal is CLEANED COAL, and the reject is SLATE or ROCK. The primary derivatives of crude petroleum are the familiar natural and refinery gases, gasolines, kerosene, the various fuels of increasing gravity, down to coke, and refinery asphalts, pitches, and the like. There is, in general, no reject or tailing, barring occasional unsalable coke and the gas flares and nightly burned residuum of the hot-oil plants.

Fundamental operations of mineral dressing are SEVERANCE, or breaking apart of the associated minerals or constituents of the crude, and SEPARATION of the severed con-

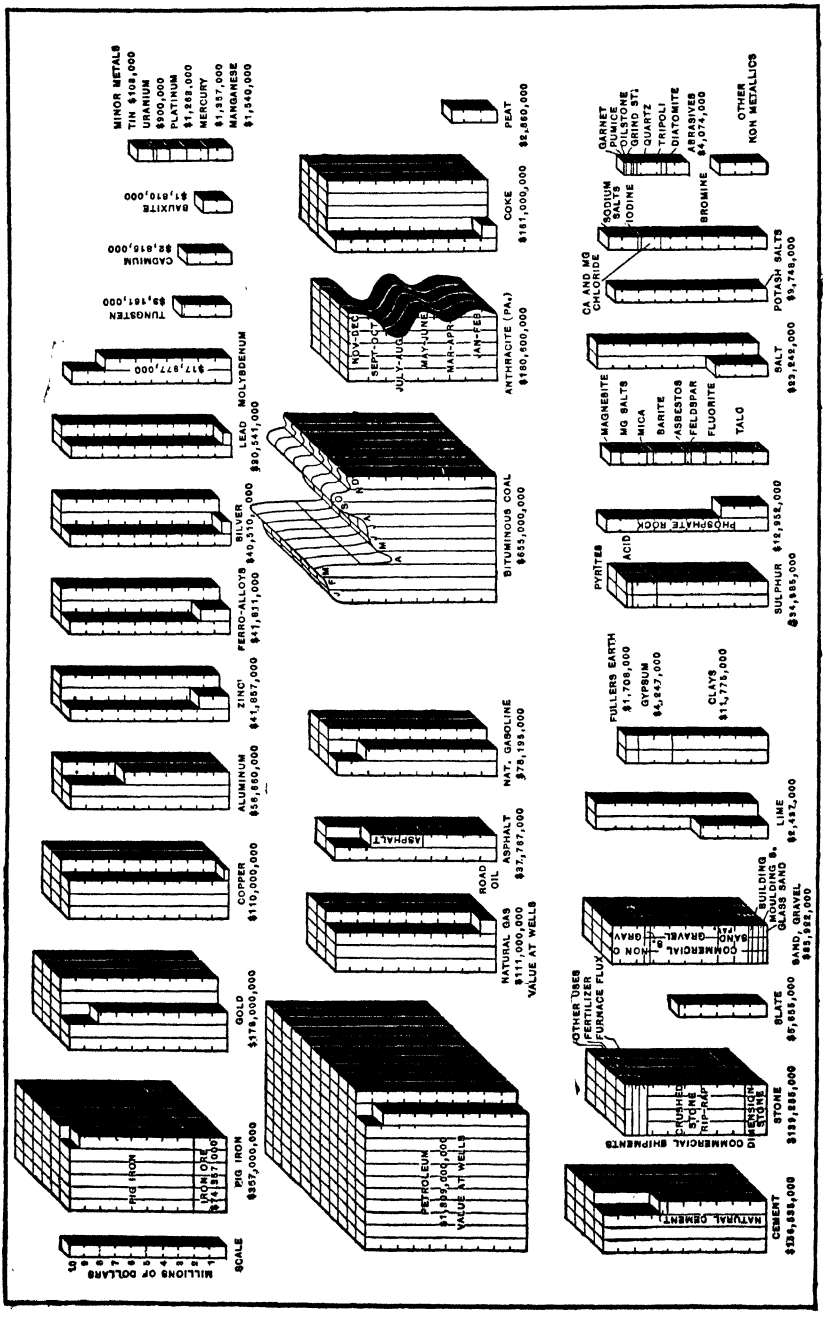

FIG. 1. Mineral production of the United States in 1938 (*after Raiz, ## MMI 169*).

stituents, which normally involves causing them to take different paths through a given apparatus. The processes differ according to the means required or used to effect these two ends.

Severance. The means differ according to the crude. With solid crudes, which are to be separated without essential chemical change, the almost universal method is some form of breaking or comminution. Chemical severance with solids usually involves either dissolution in aqueous solutions or decompositions of the oxidation-reduction type at high temperatures, with or without a selective phase change. Severance of petroleum crudes invariably involves selective phase changes, which may be accompanied by more or less profound chemical reaction.

Separation methods are much more diversified than those of severance. In ore dressing they are based upon utilization of some property in which the intermingled severed minerals differ either in kind or degree, to effect a differential response to some impulsive force. Thus magnetite, which is highly permeable to magnetic forces, moves readily toward a field of concentrated magnetic force which has no appreciable effect on the motion of a quartz grain similarly exposed; galena, with a specific gravity of 7.5, sinks under the influence of gravity in a fluid medium in which quartz (sp. gr. 2.6) rises; or again galena, by reason of the contained lead ion, may be caused to attach air bubbles to its surface in sufficient volume to cause it to float in water, while quartz, lacking the essential lead ion, does not attach air bubbles under the same conditions, and sinks. In metallurgy differences in the specific gravities or in the mobilities of the phases into which the constituents have been changed in the process of severance are made use of to produce differential movement; thus gold dissolved in certain aqueous solutions is drained away from solid gangue; liquid slag floats on molten iron in the blast furnace and the two are drawn off through separate ports; sulphur combined with oxygen in gaseous phase flows away from a solid metal-bearing residue in zinc roasters, copper reverberatories, and lead blast furnaces. In petroleum refining, vaporized low-boiling products flow away from higher-boiling fractions which are liquid under the same conditions of temperature and pressure.

The technological practice of mineral dressing involves both the design of plants and their operation. The former involves decision as to location, capacity, character of finished product, and type of flowsheet; the latter, with the details of performance and the techniques involved in their control.

Location of a mineral-dressing plant involves a balance between the source or sources of crude, the point or points of consumption, the amount of bulk concentration effected in treatment, the sources and quantities of power, water, and supplies, the labor market, the facilities for disposal of waste, transportation facilities and rates, etc. Ore-dressing plants are usually located at or near the mine, because they normally serve only one source of crude, beneficiation usually involves a relatively high degree of concentration, and transportation becomes a prevailing element of cost. The reverse is normally true in petroleum refining; the bulk of refined products is not substantially less than that of the crude, the principal markets are at the centers of population rather than at the centers of production, and transportation charges per unit of weight (or volume) are materially lower for crude than for finished products. Furthermore, sources of supply are relatively scattered by comparison with those for solid crudes. Hence Midcontinent and South and East Texas crudes are refined in Chicago and on the Atlantic seaboard, while Pennsylvania lubricating-oil crudes are refined near the wells, and the small bulk of lubricating-oil concentrate is shipped countrywide, the lighter products being sold locally. The smelter requires supplies, primarily fuel and fluxes, which may bulk as large as the concentrate feed or larger; the tendency is, therefore, to locate the smelter nearer and nearer to the source of fuel, or to the points of metal consumption, the more scattered the sources of metallic-concentrate supply. Thus tin concentrates from Malay and from Bolivia were shipped to England; Australian zinc concentrate went formerly to Belgium and now goes to the United States; African copper concentrate has been shipped to U. S. Atlantic seaboard; Lake Superior iron ore goes to Cleveland and Pittsburg, etc. On the other hand, with an exceptionally large source of feed, the smelter tends to go to the source; thus there is a smelter at Garfield, Utah, 1 to 2 mi. from its principal supplier, the UTAH COPPER mills; one at Miami, near MIAMI COPPER CO. and INSPIRATION; one at CHINO, one at RAY, one at ANACONDA, and one at McGill (NEVADA CONSOLIDATED).

Capacity of a mineral-dressing plant depends upon the potential yield of the source of supply, the size and character of the market, the competitive position, and the funds available. The incidence of the various factors approaches the obvious, although the details of incidence are infinitely varied. The best plant is one comprised of parallel units of such capacity that at least one may be kept going at full efficient rate in times of minimum market demand, and others can be thrown in, one at a time, as demand increases.

When processes are not necessarily continuous from start to finish, as, for example, is the case as between crushing and subsequent treatment in ore-dressing and hydrometallurgical plants, or topping and cracking in oil refineries, the economic advantages of large units in the preliminary treatment may be retained by providing storage between these and later processing units, and operating the large-capacity units on a part-time schedule.

Analyses of most profitable exhaustion rates under conditions of a free economy and uncontrolled interest rates have been made (see Hoover, *Principles of mining*, McGraw-Hill, 1909). Under the conditions postulated they are helpful in deciding plant capacity for plants serving a known, limited source of crude. Under modern conditions they are worse than useless, except as a tool of the politically omniscient.

Character of finished product is determined by co-consideration of the character of the crude and of the dressing processes available, and variations in marketability with quality. If metalliferous products are to be shipped long distances at high freight rates, ore dressing must aim at maximum elimination of every substance physically rejectable (including water); on the other hand the impurities in blister copper, low-grade lead bullion, and the like weigh so little that no economy would result from refining them before shipment, under conditions that penalized the process otherwise. In the face of high freight and smelter charges it will frequently pay to run arsenical gold concentrate down to bullion by roasting and cyanidation; on the other hand, when iron is desired as flux and the distance from the smelter is not too great, it will usually pay to make, say, a low-grade copper concentrate in which the bulk of the diluent is iron and sulphur. Premium gasolines will usually pay better than straight-run in a refinery near a large city even though a certain amount of straight-run is decomposed and degraded in reforming, but at the field topping off straight-run is usually economical.

A contrary situation arises in the case of Lake iron ores, most coal shipments, and certain limes, crushed stones, building sands, and the like, which are sold on the basis of specifications that fix certain minimum requirements as to purity, but give no bonuses for greater purity. Under such circumstances all weight dressed out in excess of that needed to make specification represents loss of material salable at full price. Obvious methods of avoiding such loss, going to the extent of mixing back tailing, are common practice.

Type of flowsheet to be provided depends upon the characteristics of the crude and the decisions that have been made as to location, capacity, and grade of product. The essential elements of the flowsheet must be such as take advantage of the differences in physical and/or chemical properties of the constituents of the crude; the details will vary according to the rule that, in general, high recovery of a low-grade product and low recovery of a high-grade product are equally easy and cheap to attain; and that high recovery of a high-grade product verges on prohibitive expense, approaching that barrier more or less closely according to the degree of technologic advance that has been made in the particular field. Thus copper can be run down to 0.04% or less in tailing or up to 40 to 45% in concentrate in a chalcocite ore without extreme expense, but to run a copper tailing down to 0.04 oz. per ton, which grade is relatively easy to attain with a gold ore, or to run a gold concentrate up to 40 to 45% would, even if possible, raise expenses to a prohibitive figure. Similarly 100-octane aviation gasoline produced by alkylation is profitable when the yield on original crude is low, but to attempt to produce it on a high-yield basis with present-day processes would be financial suicide.

SECTION 2

METALLIC MINERALS

USES, ORES, PRODUCTION, TREATMENT SCHEMES, SELLING

ART.		PAGE
1.	Introduction	01
2.	Flowsheets	02
3.	Aluminum	18
4.	Antimony	19
5.	Arsenic	20
6.	Beryllium	21
7.	Bismuth	21
8.	Cadmium	22
9.	Caesium	22
10.	Cerium	22
11.	Chromium	23
12.	Cobalt	25
13.	Columbium	26
14.	Copper	27
15.	Native-copper mills	30
16.	Mills for sulphide-copper ores	34
17.	Gallium	69
18.	Germanium	70
19.	Gold and silver	70
20.	Milling of placer gold	75
21.	Dredging	85
22.	Concentration of lode-gold ores	97
23.	Small gold mills	123
24.	Silver	128
25.	Custom mills	130
26.	Indium	133
27.	Iridium	133
28.	Iron	134
29.	Lead and zinc	151
30.	Magnesium	198
31.	Manganese	198
32.	Mercury	206
33.	Molybdenum	209
34.	Nickel	213
35.	Osmiridium	217
36.	Palladium	217
37.	Platinum	218
38.	Radium	219
39.	Rubidium	220
40.	Selenium	220
41.	Tantalum	220
42.	Tellurium	222
43.	Thorium	222
44.	Tin	223
45.	Titanium	241
46.	Tungsten	243
47.	Uranium	250
48.	Vanadium	252
49.	Zirconium	253
50.	Selling metallic ores and concentrates. REVISED BY P. M. TYLER	254

1. INTRODUCTION

Metals occur in ores either in the native state (*e.g.*, Au, Ag, Pt, Cu) or as salts or oxides (CuS, Fe_2O_3, $PbCO_3$, etc.). But no matter what the chemical form, the metal or metallic mineral is invariably associated with more or less—usually more—barren rock. The form in which the metal is required by the primary consumers is as relatively pure substance. Hence a more or less extended campaign of purification, usually involving, in order, ore dressing, metallurgical extraction, and chemical refining, intervenes between delivery of ore at the mine exit and delivery of the metal to the purchaser.

This section presents selected records of ore-dressing methods as practiced in operating plants. These methods are grouped according to the principal metal or metals sought, and are presented, in general, in the form of annotated flowsheets. Subsequent treatment of concentrate is indicated briefly. Data as to uses of the metal and production statistics are given; price histories and selling methods are summarized in Art. 50.

Selection of an ore-dressing treatment scheme that is the best available, or a close approximation thereto, is an essential step in profitable exploitation of a given ore deposit. In order to effect such a selection it is necessary to know what methods of concentration are applicable, what their performance limitations are, and what it costs to operate them. Flowsheets give such information, if properly analyzed. But the bases upon which selection of a flowsheet depends are not solely technical, *i.e.*, the flowsheet selected is not necessarily the one that yields maximum recovery of high-grade concentrate. MAGMA COPPER Co. (Fig. 16) makes a concentrate assaying 13% Cu when 30% Cu is possible, because the smelter is at the plant and freight on concentrate is not an expense, and further because the pyrite left in the concentrate is an asset at a smelter receiving siliceous gold ores. ANACONDA makes a similar low-grade pyritic concentrate because again the smelter is at the mill and sulphuric acid is wanted in other processes in the plant. On the other hand, MOUNT ISA, shipping zinc concentrate 10,000 mi., runs the grade up to 53% on a high-iron

sphalerite despite high tailing loss, in order to save freight. Consequently, in studying flowsheets, all pertinent factors should be considered, else the records will present a picture of bewildering and apparently senseless difference and complexity.

2. FLOWSHEETS

The plant for separating metalliferous mineral from gangue is called a CONCENTRATOR, or, less definitively, a MILL, and the process is CONCENTRATION or MILLING. A mill flowsheet is an economic compromise, within the limits of technical possibility, between the market schedule for concentrate and the cost of concentration. Smelter schedules, either by definite specification or, in conjunction with transportation tariffs, by economic penalties, usually impose a minimum grade of concentrate; while smelter bonuses and the economic advantage that lies in reduction of the tonnage transported offer reward for increase in concentrate grade. At the other end of the scale, the lithological character of the ore imposes more or less definite and controlling limitations on the method of concentration available and, thereby, correlatively on grade of concentrate, recovery, and cost.

Principles. There are, perhaps, half a dozen generalizations applicable to the technology of concentrating plants, which are of such universal incidence that failure to find them followed in any given flowsheet should immediately raise questions as to the suitability of the flowsheet or as to the considerations other than technical that have prevailed in the design. These generalizations follow:

(1) Concentrate and/or tailing should be taken out of the mill stream at as coarse a size as is consonant with maintenance of the desired grades of concentrate. Tailing taken out at coarse sizes should be credited with the cost of further size reduction and (usually) with the increase in cost of concentration at fine as opposed to coarse sizes. When concentrate is taken out at coarse size, recovery with respect to the contained mineral will be higher than if separation is deferred, for the reason that comminution of valuable mineral invariably produces some very fine particles that are extremely difficult to save.

(2) Concentrating processes other than flotation all depend upon the existence of an appreciable difference in some physical property of valuable mineral and gangue, *e.g.*, size, hardness, specific gravity, permeability, appearance, etc. If no such difference exists, flotation, which depends upon chemical rather than physical differences, must, perforce, be used, if concentration is to be effected by physical means.

(3) Concentration by physical means can, in general, be performed at any size at which the constituent minerals are sufficiently severed to justify designation of individual pieces as concentrate and/or tailing. Flotation normally requires comminution to at least 35- or 48-m.

(4) Time is an essential factor in all concentrating operations. In general the amount of time required per unit of weight for separation increases markedly with decrease in size of particle. It follows that the capacity of a concentrating machine or operation increases with increase in size of the feed particles.

(5) The cost of any concentrating operation involving either special preparation of feed or special handling of products should be charged with the cost of these special accessories.

(6) If, as is usually the case, maximum profit is the aim of a concentrating operation, this end is normally served best by some combination of recovery and grade of concentrate that does not include the technical maximum of either quantity.

(7) All other things being equal, a large unit, be it a crusher or a grinding mill, a concentrating machine, or some piece of accessory apparatus, will do its appointed job more efficiently and more cheaply than a small unit, provided only that it is equally well designed and that it is kept working at or near full capacity.

There are, similarly, a small number of economic facts and principles, common to industries generally, and not specific to concentration, which should, nevertheless, be ever in the mind of the student and the designer of flowsheets. Perhaps the one most commonly ignored is that listed first below:

(1) The most efficient plant possible cannot make money unless there is ore to work on, and a sufficient quantity to permit work to continue long enough to allow amortization of plant and equipment at a reasonable percentage rate.

(2) Estimates both as to production cost and selling price may be made with much more assurance for the common metals than for the rare metals. Neither demand for nor supply of the former will change to the same extent or with the same percentage rapidity as is possible with the latter.

(3) If the margin between selling price and production cost is small, it is foolhardy to build a plant on the basis of assumptions either as to price improvement or cost reduction. This is especially true when the technology of production is well established and the cost already relatively low. In this connection it should be borne in mind that an increase in

[Text continued on p. 6.]

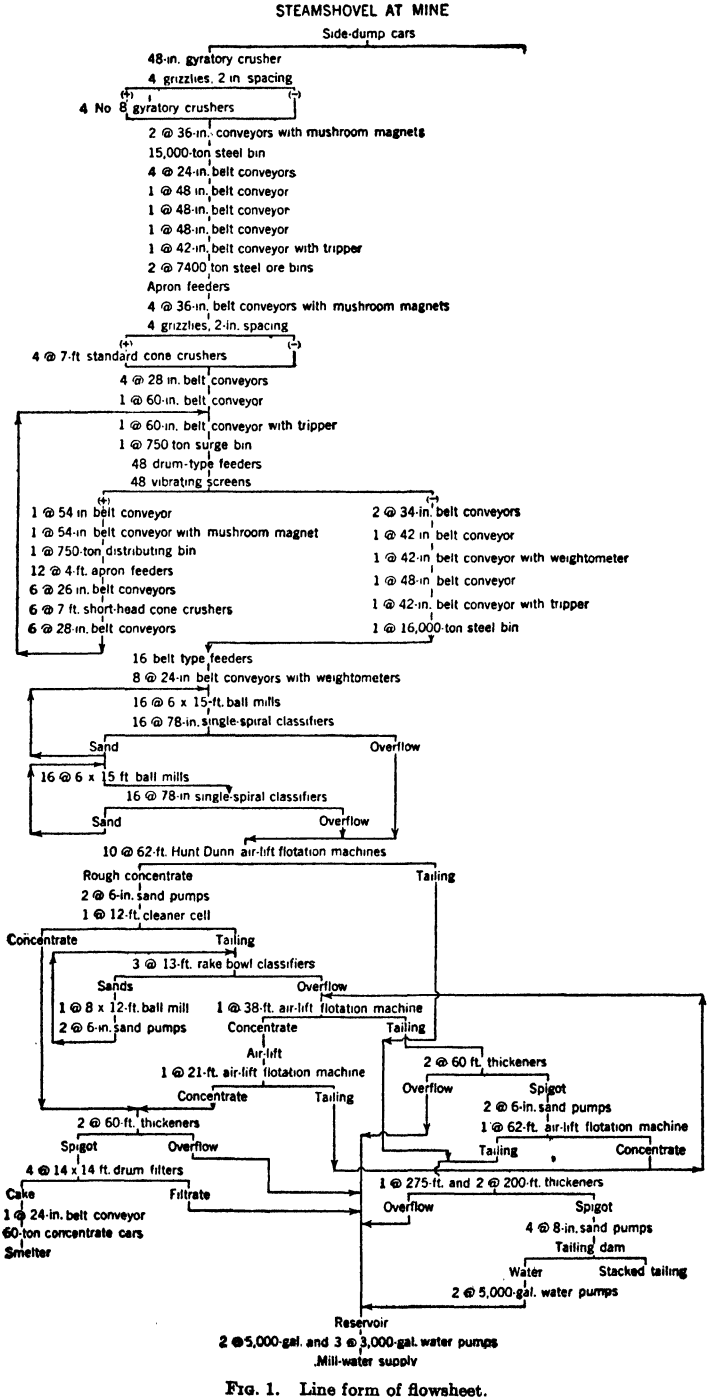

FIG. 1. Line form of flowsheet.

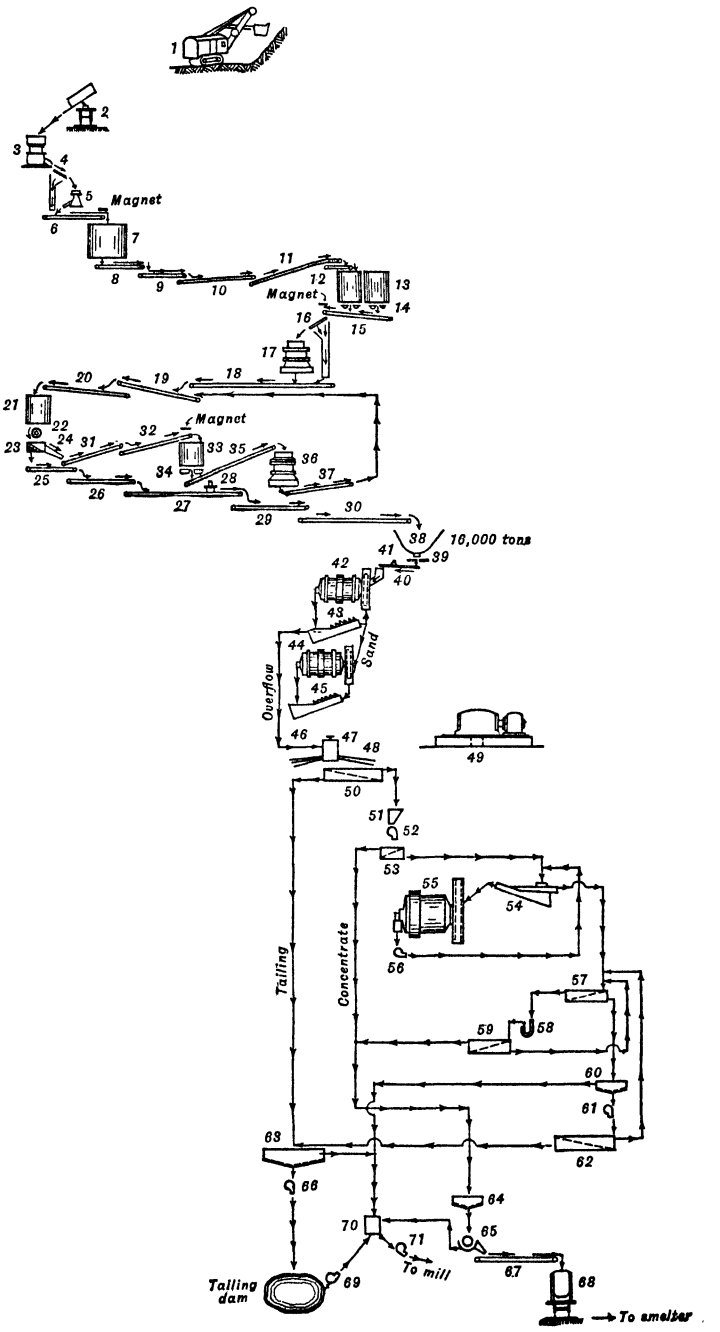

FIG. 2. Pictorial form of flowsheet.

Legend for Fig. 2:

1. Full-revolving electric shovel, 4 1/2-yd. dipper.

2. 20 and 30-yd. side-dumping cars, standard-gage track.

3. One 48-in. gyratory crusher. Driven by 200-hp. motor through belt drive to pinion.

4. Four grizzlies. 70-lb. rails spaced 2-in. spaces.

5. Four No. 8 Gates gyratory crushers. Driven by 75-hp. motors through Texrope to pinion.

6. Two conveyors. No. 1A and 1B, 36-in. belt, 1130 ft. long, 290 ft. per min. Lift 51 ft. Driven by 75-hp. motor through speed reducer. Belt-propelled, clutch-type, tripper car. Over bin. Each conveyor has magnet.

7. One 15,000-ton steel ore bin. With manganese-steel gates on bottom to discharge into tripper cars.

8. Four conveyors, Nos. 2E, F, G, H, 24-in. belt, 225 ft. long, speed 450 ft. per min. Driven by 10-hp. motor through speed reducer. Self-propelled reversible tripper cars. Belt independent of tripper. Tripper feeds belt from floor of bin above.

9. One conveyor, No. C4, 48-in. belt, 415 ft. long, 450 ft. per minute. Driven by 100-hp. motor through gear and pinion reduction. Fed by 16.

10. One conveyor, No. C5, 48-in. belt, 418 ft. long, 440 ft. per min. Lift 46 ft. Fed by 17. Driven by 100-hp. motor through gear and pinion reduction.

11. One conveyor, No. C6, 48-in. belt, 480 ft. long, 440 ft. per min. Lift 54 ft. 0 in. Fed by 18. Driven by 100-hp. motor through gear and pinion reduction.

12. One No. 3A conveyor, 42-in. belt, 314 ft. long, 450 ft. per min. Driven by 30-hp. motor through gear and pinion reduction. Self-propelled and reversible tripper car. Conveyor over bin.

13. Two 7400-ton steel ore bins. Sliding gates feeding into apron feeders.

14. Four units of four 4-ft. 0-in. manganese-steel apron feeders. Driven from pulley on conveyor pulley through gear and pinion reduction. Speed 12 ft. per minute.

15. Four belts, No. 4, 36-in. belt. 170 ft. long, 272 ft. per min. 10-ft. lift. Driven by 10-hp. motor through gear and pinion reduction. Each belt has magnet over grizzlies.

16. Four grizzlies. Bars 2-in. spaces.

17. Four 7-ft. 0-in. standard cones. Driven by 300-hp., synchronous motors, direct connected.

18. Four conveyors. 28-in. belts, 355 ft. 0 in. long, 400 ft. per min. Lift 18 ft. 0 in. Driven by 20-hp. motor through speed reducer.

19. One conveyor, No. 5A, 60-in. belt, 632 ft. long, 650 ft. 0 in. per min. Lift 30 ft. 0 in. Driven by 200-hp. motor through speed reducer.

20. One conveyor, No. 5B, 60-in. belt, 717 ft. long, 650 ft. per min. Lift 26 ft. 0 in. Driven by 200-hp. motor through speed reducer. Self-propelled reversible tripper car over screen-feed bins

21. One 750-ton steel bin for screen feed.

22. Forty-eight drum feeders to screens. 18-in. dia. and 46 in. long.

23. Forty-eight electric vibrating screens.

24. Twenty-four screen oversize-discharge chutes.

25. Two conveyors, No. 8A1, No. 8A2, 34-in. belts, 228 ft. 0 in. long, 440 ft. per min. Feed from screens. Driven by 25-hp. motor through gear and pinion reduction.

26. One conveyor, No. 8B, 42-in. belt, 158 ft long, speed 420 ft. per min. Driven by 15-hp. motor through gear and pinion reduction.

27. One conveyor, No. 8, 42-in. belt, 521 ft. long, speed 470 ft. per minute. Lift 58 ft. 0 in. Driven by 100-hp. motor through gear and pinion reduction.

28. One weightometer.

29. One conveyor, No. 9, 48-in. belt, 820 ft. long, speed 490 ft. per min. Driven by 250-hp. motor through gear and pinion reduction. Lift 100 ft. 9 in.

30. One conveyor, No. 10, 42-in. belt, 1,347 ft. long, speed 450 ft. per min. Driven by 100-hp. motor through gear and pinion reduction. Self-propelled reversible tripper car over 16,000-ton bin. Lift 39 ft. 0 in.

31. One conveyor, No. 5C, 54-in. belt, 658 ft. 0 in. long, speed 570 ft. per min. Lift 30 ft. 0 in. Driven by 150-hp. motor through gear and pinion reduction.

32. One conveyor, No. 5D, 54-in. belt, 717 ft. 0 in. long, speed 570 ft. per min. Lift 26 ft. 0 in. Driven by 150-hp. motor through gear and pinion reduction. Self-propelled reversible tripper car. Has magnet before entering tripper car.

33. One 750-ton steel ore bin. Feeds 7-ft. short-head cones.

34. Six units, two per unit, 4-ft. 0-in. apron feeders. Manganese steel. Each unit driven by 15-hp. motor through right-angled drive-speed reducer, thence through gear and pinion reduction.

35. Six conveyors, No. 6A, 26-in. belt, 80 ft. 0 in. long, speed 540 ft. per min. Driven direct by 10-hp. geared motor.

36. Six 7-ft. short-head cones. Driven by 250-hp synchronous motors through pulleys and Texrope drive.

37. Six conveyors, No. 7, 28-in. belt, 150 ft. long, speed 480 ft. per min. Lift 16 ft. 0 in. Driven by 20-hp. motor through speed reducer.

38. One 16,000-ton mill ore bin. Suspended type.

39. Sixteen feeders, conveyor. 42-in. belts, 54 ft. long, speed 32 ft. per min. Driven by 2-hp. motor through reducer.

40. Eight conveyors, No. 11, 24-in. belt, 92 ft. long, speed 150 ft per min., lift 9 ft. 0 in. Driven by 5-hp. motor through gear and pinion reduction.

41. Eight weightometers.

42. Sixteen 6 by 15-ft. primary ball mills. Driven by 300-hp. synchronous motors. Magnetic clutch. Speed of mills, 23.1 r.p.m. Two mills per unit.

43. Sixteen 78-in. single spiral classifiers. Driven at 3 1/2 r.p.m. by 7 1/2-hp. MotoReducers.

Legend for Fig. 2—Continued:

44. Sixteen 6 by 15-ft. secondary ball mills. Driven by 300-hp. synchronous motors. Magnetic clutch. Speed of mills, 23.1 r.p.m. Two mills per unit.
45. Sixteen 78-in. single spiral classifiers. Driven at 3 1/2 r.p.m. by 7 1/2-hp. MotoReducers.
46. Eight main 12-in. headers, from primary and secondary classifier overflow. One mill per unit.
47. Two pulp distributors to flotation machines.
48. Ten launders; five launders from each pulp distributor to flotation machines.
49. (Air production. All air at 2-lb. pressure.)
Two 20,000-cu. ft. per min. centrifugal blowers. Driven direct by 650-hp. synchronous motors at 3600 r.p.m.
One 30,000-cu. ft. per min. centrifugal blower. Driven direct by 650-hp. synchronous motor at 3600 r.p.m.
Two No. 8 cycloidal blowers, 8000 cu. ft. per min. each. Driven by 200-hp. motors through belt and pulleys.
50. Ten 62-ft. 0-in. Hunt-Dunn type flotation machines.
51. One sump.
52. Two 6-in. sand pumps.
53. One 12-ft. Hunt type re-treatment cell.
54. Three 13-ft. 0-in. bowl-type classifiers. Speed bowl rakes 6 r.p.m. Sand rakes 18 s.p.m.
55. One 8 by 12-ft. ball mill. Regrind, 12 r.p.m. Driven by 300-hp. synchronous motor.
56. Two 6-in. sand pumps.
57. One 38-ft. 0-in. Hunt-Dunn type flotation cell.
58. One air lift, 25-lb. pressure.
59. One 21-ft. Hunt-Dunn type flotation cell.
60. Two 60-ft. thickeners.
61. Two 6-in. sand pumps.
62. One 62-ft. 0-in. Hunt-Dunn scavenger flotation cell.
63. One 275-ft. slime traction thickener. Two 200-ft. slime traction thickeners.
64. Two 60-ft. thickeners.
65. Four 14 by 14-ft. drum-type filters. Two 8-ft. 6-in. 7-disk filters.
66. Four 8-in. sand pumps.
67. One conveyor, No. 12, 24-in. belt, 744 ft. long, belt speed 110 ft. per min. Drop 11 ft. 0 in. Driven by 7 1/2-hp. motor through reducer.
68. 60-ton concentrate cars to smelter.
69. Two 5000-gal. per min. fresh-water pumps. Direct driven by 250-hp. induction motor.
70. One reservoir, receiving all reclaimed water.
71. Five return-water pumps: two 5000 gal. per min.; three 3000 gal. per minute.

the price of any particular metal improves the competitive position of substitute metals and alloys; that price no longer fluctuates freely in response to demand; that profits are taboo; and that future profits estimated on the basis of a rise in selling price are, probably, in the chimerical class.

Improvement in production technique may, in general, be prognosticated with safety; but further prognosis that such improvement can be translated into profit is to ignore recent evidence. This is that as technological advance decreases the expenditure of labor and supplies, the price of labor, and the costs of insurance and taxes may be expected to advance at least proportionately.

Presentation of flowsheets. Flowsheets are shorthand methods of telling the story of the routing of a mineral product in a dressing plant. They are varied greatly in form according to the information sought to be conveyed. The simplest form to write and, therefore, the one most commonly used, is that shown in Fig. 1. The same flowsheet, in the graphical form which is the draftsman's delight, and is commonly used in periodicals for its pictorial value, is shown in Fig. 2. The same flowsheet in the abbreviated segregated form used herein is Fig. 3. It was devised to make apparent at a glance the principal operations employed in the treatment scheme, the extent of each operation, the products made, and the points at which they are removed. As applied herein the accessory apparatus of transport, storage, weighing, sampling, and the like are suppressed, in so far as the pictorial scheme goes, but are denoted by numbered arrows which indicate relative location and refer to details in the accompanying parts list.

Condensed flowsheets are useful for study and comparison of practices followed in different parts of mills. A form found useful for crushing is shown in Fig. 4; one for grinding in Fig. 5 and others for grinding in Figs. 73 and 76; one for flotation in Sec. 12, Fig. 58.

Field notes. A flowsheet can be made in the field by any one who has plenty of time, good wind, strong leg muscles, and a reasonable supply of patience and persistence. The normal busy visitor to a plant lacks the time, however; he certainly, in some cases, has passed the age when wind and muscle are expendable; and he is normally accompanied on his round by an official who, though invariably courteous, has work of his own to do on a schedule that does not include step-by-step following of the flow of pulp. Field notes should accommodate to this situation and yet provide a record from which an accurate flowsheet can be drawn at a later date. One scheme that solves the problem is shown in Table 1. The underlying idea is to record each piece of apparatus as it is reached in the

[Text continued on p. 10.]

Legend for Fig. 3:

1. 20- and 30-cyd. side-dump standard-gage cars from mine.
2. 1 @ 48-in. gyratory, 200-hp. motor, belt drive.
3. 4 grizzlies, 2-in. spaces, 70-lb. rail.
4. 4 @ No. 8 gyratories, 75-hp. motors, Tex-rope drives.
5. 2 @ 36-in.×1,130-ft. conveyors in parallel, 51-ft. rise, 290 f.p.m., 75-hp. motor with speed reducer, magnet, self-propelled clutch-type trippers.
6. 1 @ 15,000-ton circular steel bin; manganese-steel gates to tripper cars.
7. 4 @ 24-in.×225-ft. gathering belt conveyors in parallel, 450 f.p.m., 10-hp. motors with speed reducers, fed by tripper cars from floor of bin; conveyors C4, C5, C6, 3A in series.
8. 2 @ 7,400-ton circular steel bins, sliding gates, apron feeders; conveyors 4.
9. 4 bar-type grizzlies, 2-in. spaces.
10. 4 @ 7-ft. standard cone crushers, 300-hp. synchronous motors, direct-connected.
11. 4 @ 28-in. conveyors, 750-ton circular steel screen surge bin.
12. 48 vibrating screens.
13. Conveyors, 750-ton circular steel surge bin.
14. 6 @ 7-ft. short-head cone crushers, 250-hp. synchronous motors, Tex-rope drive.
15. Conveyors, 16,000-ton suspended-steel bin.
16. Conveyor.
17. 8 conveyors.
18. 16 @ 6×15-ft. ball mills, 23.1 r.p.m., 300-hp. synchronous motors direct-connected through magnetic clutch.
19. 16 @ 78-in. simplex spiral classifiers (one to each mill), 3 1/2 r.p.m., 7 1/2-hp. motors with speed reducers.
20. 16 @ 6×15-ft. ball mills, 23.1 r.p.m., driven as (18).
21. 16 classifiers as (19).
22. 2 @ 5-launder tub distributors.

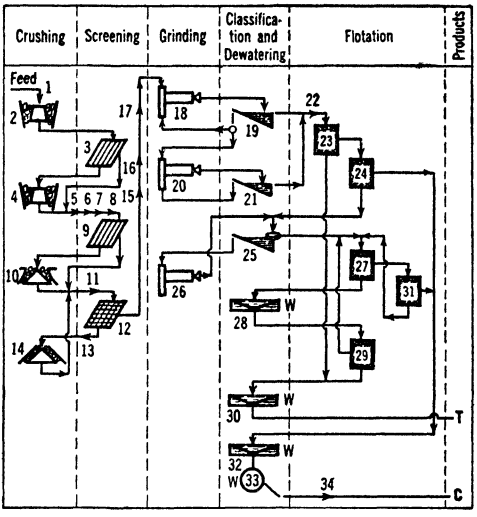

23. 10 @ 62-ft. Hunt-Dunn air-lift flotation machines.
24. 1 @ 12-ft. Hunt-Dunn machine.
25. 3 @ 13-ft. bowl-rake classifiers, 6 r.p.m., 18 s.p.m.
26. 1 @ 8×12-ft. ball mill, 12 r.p.m., 300-hp. synchronous motor.
27. 1 @ 38-ft. Hunt-Dunn machine
28. 2 @ 60-ft. thickeners in parallel.
29. 1 @ 62-ft. Hunt-Dunn machine.
30. 1 @ 275-ft. and 2 @ 200-ft. traction thickeners in parallel.
31. 1 @ 21-ft. Hunt-Dunn machine.
32. 2 @ 60-ft. thickeners in parallel.
33. 4 @ 14×14-ft. drum filters, 2 @ 8 1/2-ft. 7-disk filters, in parallel.
34. Conveyor to railroad cars to smelter.

FIG. 3. Segregated form of flowsheet.

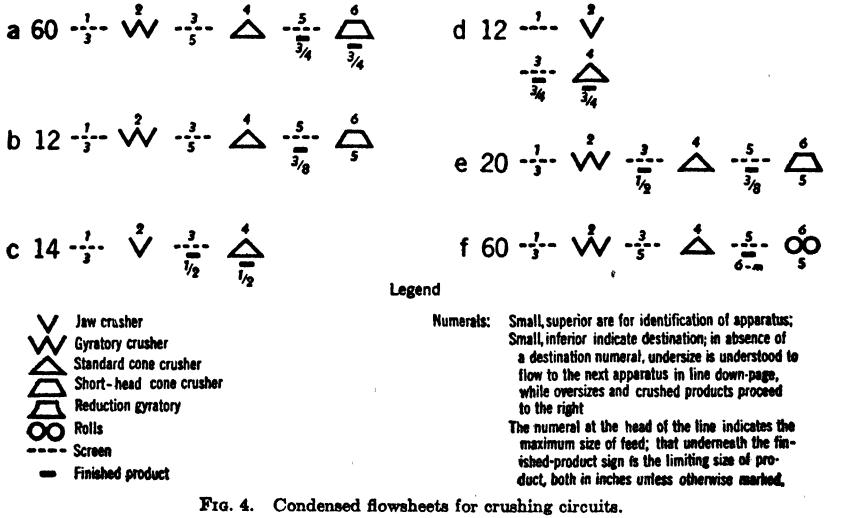

FIG. 4. Condensed flowsheets for crushing circuits.

Table 1. Flowsheet field notes

3/17/44. New Cornelia. L. M. Barker.

My No. of machine	Plant name of machine	Descriptive matter	Source of feed: Plant name	Source of feed: My No.	Products: Kind	Products: Destination: Plant name	Products: Destination: My No.
		(1)	*Crushers*				
14	S.H. cones	6 @ 7-ft. 250-hp. syn. & Tex-rope	S.H. surge	13	<	Conv 7 etc. to screen surge bin	11
10	Std. cones	4 @ 7-ft. 300-hp. syn. dir. conn.	2-in. sec. griz >	9	<	4 @ 28-in. conv. to scr. surge	11
4	Sec. gyr.	4 @ No. 8, 75-hp. Tex-rope	2-in. prim. griz.	3	<	Conv. 1 A & B & 15,000 t. bin.	5
2	Prim. gyr.	1 @ 48-in. 200-hp. belt dr.	Dump cars	1	<	Prim. griz.	3
		(2)	*Screens*				
12	Vib. screens	48	Drum feeders on screen surge	11	>	Conv. 5c & SH surge	13
✓		✓		✓	<	Conv. 8A etc. & Mill bin.	15
9	2-in. sec. griz.	4, bar-type	Conv. S 4	8	>	Std. cones	10
✓		✓		✓	<	28-in. conv. & scr. surge	11
3	2-in. prim. griz.	4, 70% rail, 2-in. spaces	Prim. gyr.	2	>	Sec. gyr.	4
✓		✓		✓	<	Convs. 1 + 15,000-T. bin.	6
✓		(3)	*Grinding mills*				
18	Primary B.M.	16 @ 6×15, 2 per unit, 23.1 rpm. 300-hp. syn., mag. clutch	Mill bins	17	<	Primary classifier	19
			Prim. Cl.	19			✓
20	Sec. B.M.	16 @ 6×15, 2 per unit as above	Prim. B M Cl	19		Sec. b.m. class	21
			Sec. Cl.	21	<		
26	Regrind mill	1 @ 8×12-ft. 12 rpm 300-hp. syn.	Bowl sand	✓	<	Bowl via pumps	✓
		(4)	*Classifiers, Dewatering*				
19	Primary-mill Cl.	16 @ 78-in. spiral simplex 3 1/2 r.p.m.	Prim. bm.	18	>	{ Prim. bm.	18
21		7 1/2-hp. motoreducers				{ Sec. b.m.	20
				✓	<	Flot'n. distrib.	22
	Sec.-mill Cl.	16 as above	Sec. BM	20	>	Sec BM	20
✓		✓	✓	✓	<	Flotn. distrib	22
32	Conc. thick	2 @ 60-ft. in ‖	Retreat. & recleaner cells	24			
				31	>	Filters	33
✓		✓	✓	✓	<	W	..

25	Bowl Cl	3 @ 13-ft., 6 rpm., 18 s.p.m.	Retreat cell	24	>			
			T & regrind b.m.	26		Regrind B.M.	26	
	√	√		√	<	Regrind cleaner	27	
28	Intermed. thick	2 @ 60-ft.	Regr. Cl. T	27	>	Regr. scav.	29	
	√	√		√	<	Recl. W	.....	
30	T. thick	1 @ 275-ft. Trac. 2 @ 200 ft. trae.	Primary & regr. scav.	23	>	Tail pond	.....	
	√	√		29	<	W	.....	
33	Filter	4 @ 14×14-ft. drum; 2 @ 8 1/2-ft.	Con thick	32	>	Con. 12 & R.R	34	
	√	7-disk	√	√	<	W	.....	
			(5)	*Flotation*				
24	Retreatment cells	1 @ 12-ft. Hunt type	Prim. rg. C	23	C	C thick	32	
	√	√	√	√	T	Bowl cl.	25	
31	Regrind recl.	1 @ 21-ft. Hunt Dunn	Regr. Cl.	27	C	Con. thick	32	
	√	√		√	T	Regr. cl.	27	
29	Regr. scav.	1 @ 62-ft. Hunt Dunn	Int. thick	28	C	Regr. Cl.	27	
	√	√		√	T	T thick	30	
23	Rougher	10 @ 62-ft. Hunt-Dunn	Distrib.	22	C	Retreat cell	24	
	√	√	√	√	T	T thick	30	
27	Regrind Cl.	1 @ 38-ft. HD	Bowl <	25	C	Regr. recl.	31	
	√	√	Scav T	29	T	Int. thick	28	
			Regr. recl. T	31				
			(6)	*Transport and Storage.*				
17	Conv. 11	8 @ 24-in.×92 ft. (+9 ft.) 150 f.p.m. 5 hp. gear & pinion	Bin feeders & bin conv.	16	.....	Prim. B.M.	18	
				√			√	
16	Bin convs.	42-in.×54 ft., 32 f p.m. 2 hp. motor with reducer	Mill bins	15	.....	Conv. 11	17	
				√				
22	Flot Distrib.	2 @ 5-launder tub distrib.	Prim. & sec. b m. class of.	19	.....	Prim. flot. rg.	√	
				21			23	
15	Mill bins	16 000-ton, stl. susp. bunker	Conv. 10	12	.....	Bin conv.	16	
13	S.H. & surge	750-ton circ. stl.	" 5 D	12	.....	Convs. 6A to SH	14	
8	7400-t. bins	2 circ., stl., sliding gates, apron feeders, conveyors 4	{ Conv. 3A { X-over conv.	7	.....	sec. griz.	9	
6	15 000-t. bin	1, circ. stl. Mn gates to trip cars	Sec. gyr. Conv 1A & 1B &	5	.....	Convs. # 2	7	
1	Dump cars	20- & 30-cyd. side, std. ga.	Mine	.....	.....	Prim. gyr.	2	
5	Convs. 1	2 (A & B) 36-in. × 1130-ft. (+51), 290 f.p.m., 75-hp. reducer. Magnet, tripper, belt-propelled, clutch.	Sec. gyr	4		15 000 T bin	6	
	√		< Prim. griz.	√			√	
				√			√	
7	Convs. 2 etc.	4 (E, F, G, H) 24-in. × 225-ft., 450 f.p.m., 10-hp. reducer, fed by tripper cars from bin, C4, C5, C6, 3A	15 000 t. bin	6			8	
				√			√	
				√		7400-t. bins	√	
11	Screen surge	750-t. circ. stl.	Std. cones & conv.	10		Vib. scr.	12	
			SH cones	14				

tour, regardless of its place in the general order of flow, and to note at the place of record the plant name of the machine, the source or sources of its feed, and the destinations of its products. The amount of detail to be recorded at the time depends on circumstances. For ease in working up the notes it is best to group all notes concerning individuals of a given type of machine, *e.g.*, crushers, or classifiers, together. It is convenient to have the notebook suitably ruled as in Table 1 before starting, and to give each class of machine a separate page. Table 1 is built on an imaginary trip through the NEW CORNELIA mill (Figs. 1 and 2) with Mr. Barker, the courteous but somewhat hurried guide; table and trip started with the primary ball mills, and the field record comprised the entries in all columns of the table except those for numbers, which are filled during office work-up. A field check of all items except transport is readily available by queried verification of the totals in the "Description" columns for the different classes of machines, *e.g.*, 14 flotation cells, 15 crushers, etc.

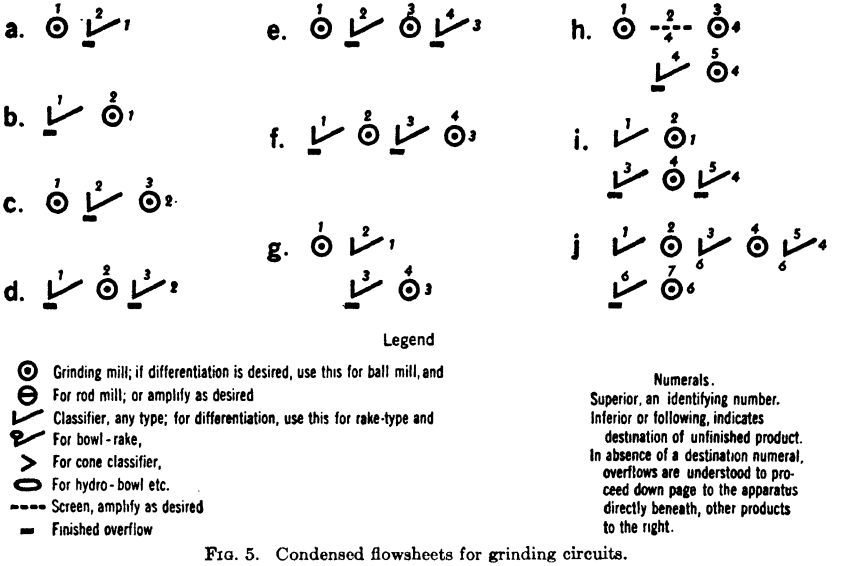

FIG. 5. Condensed flowsheets for grinding circuits.

Work-up starts, assuming that it is made by a different person than the field man, by searching the column "Source of feed" for the entry "Mine." In the present case this is found on page 6 of the notes ("Transport") and the corresponding machine ("Dump cars") is numbered 1 in the left-hand column; the destination of the product is at the same time numbered 2 in the right-hand column. Turning to p. 1, the primary gyratory is now given the number 2 assigned to it on p. 6, the destination of its product is numbered 3, and its source 1.

Subsequent numbering may be done most easily if construction of the flowsheet is carried along simultaneously. Taking as an example the form of flowsheet used in this book (Fig. 3), the sheet is ruled with vertical columns for segregation of the symbols designating the principal classes of machines, in the present case Crushing, Screening, Grinding, Classification and Dewatering, and Flotation, and a final column for Products. No column is provided for transport or storage; these are indicated by numbered arrowhead marks at the places where they appear in the flow.

Referring now to p. 6 of the field notes, item 1 is the dump cars and is indicated on the flowsheet by the correspondingly numbered arrowhead on the flow line starting from the word "Feed." At the same time, item 1 of the Legend is entered. Item 2 of the flowsheet is next drawn and the corresponding entry made in the Legend. The primary grizzly is now numbered 3 on p. 2 of the field notes, is indicated as shown on the flowsheet, its description entered in the Legend, and the destination of the oversize ("Secondary gyratory") is numbered 4 in the last column of p. 2 of the field notes, the source number being filled in at the same time. The destination of the undersize of the grizzly is left unnumbered for the present. The secondary gyratory (p. 1 of field notes) is now numbered 4 (destination 5 and source 3), and the corresponding entries of item 4 made on the flowsheet and Legend, with the proper connecting lines drawn in. Items 5, 6, 7, 8, and 9 are next handled successively as indicated. At this time the line indicating the undersize of item 3 can be drawn in by reference to item 3 undersize (<) on p. 2 of the field notes, Conveyor 1 having, by this time, been identified as item 5. Continuing with the oversize of item 9 through 10 and 11 to 12 now permits the line for undersize of 9 to be drawn. When the path of the oversize ends with the delivery of the product of the short-head crushers (item 14) to the screen surge bin (item 11), the undersize of item 12 is picked up, and its destination is assigned the next number (15). From item 15 to item 23 the procedure is as before. The flotation cells (items 23, 24, 27, 29, and 31) are arranged on the plan that successive floats of a given stream are pictured successively along a vertical line on the flowsheet, while refloat operations are pictured along lines moving to the right. Thus the diagram in the Flotation column shows at a glance one float only on the primary stream, three successive floats on the rougher concentrate with regrinding and thickening

intervening, and one recleaning. The choice, at each flotation stage, of the stream to follow is a matter of convenience in drawing the diagram, that item being chosen for the next number which best lends itself to shortest flow lines on the drawing. Water returned to circulation is indicated by W in order to eliminate flow lines.

A final check should be made by comparing field-book entries with the completed flowsheet, when all source and destination numbers in the field book should appear on the flowsheet, and all source-number and destination-number places in the field book should show filled.

Check list. Notes should start with the date, location, and name of informant. These are the three items apparently most easily forgotten by any busy man. General items of importance are: LOCATION of dressing plant with respect to supply, market for product, and waste disposal; ORE: Mineralogical composition, assay, hardness, size, special characteristics affecting milling; WATER: Source, composition (if any chemical operations are involved in dressing), quantity available and consumed, transport, methods of reclamation; POWER: Source, nature, consumption, reliability; LABOR: Source, nature, consumption; TRANSPORTATION OF FEED AND PRODUCTS: Distances and methods; MILL BUILDING: Site, type, material; PERFORMANCES: Assays of products, recovery; COSTS: Detailed, over-all. For specific machines and processes the details wanted vary. The following list is suggestive.

CRUSHER: Maker, type, size, set, throw, speed, tons new feed per hr., circuit, % circulating load, power installed and consumed, method of drive, size of feed and product (screen tests or limiting apertures), method of feeding, material and life of wearing parts, miscellaneous technical or operating data, costs.

The essential subject matters for any machine are: Identification, conditions of operation, performance, and cost.

Condensed mill flowsheet, without detail, is useful for purposes of record. It should present only the primary data. Such a flowsheet for the mill of Figs. 1, 2, and 3 is given in Fig. 5*A*, using the conventions of Figs. 4, 5, and Sec. 12, Fig. 58.

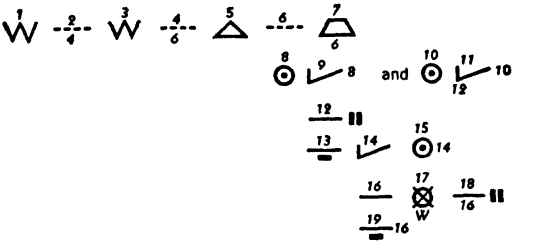

FIG. 5*A*. Condensed flowsheet corresponding to Fig. 3.

Production; prices; uses. District, state, national and world production are obtainable from publications of the U. S. Geol. Survey, the U. S. Bureau of Mines, the U. S. Department of Commerce, and various technical publications. Summaries of such data for 1938 are shown in Figs. 6 and 7. Study of these, together with average prices over a period of years, obtainable from the same sources, furnishes a basis for judgment as to the market for dressed products, possible competition, etc. Knowledge of uses will tell something as to the probable stability of demand, wide and varied use tending toward stable, increasing demand.

The early increase in the use of closed bodies for automobiles resulted in a great increase in the demand for aluminum, which the shift to pressed-steel and the possibility of the use of plastic bodies in turn decreased. Centralization of power production together with the electrification of long stretches of railroad resulted in increased demand for copper and aluminum. On the other hand, the enormous and relatively high grade copper deposits of Central Africa are a definite damper on any great increase in copper prices, barring political manipulation. The tremendous increase in knowledge of alloys in the last decade has jumped demands for the rare metals, demands which may be expected to increase.

The grade or physical character of certain concentrates, such, for instance, as zinc, molybdenite, and lead, is highly important in determining price. The smelter is the direct buyer of concentrating-mill products. Its charges for treatment, and its scale of payment for metals, while based ostensibly on its own costs and upon market prices for metals respectively, actually are the result of bargaining with the producer on the fundamental basis of what the traffic will stand. Hence the actual return to the producer in a particular case is not to be estimated safely until at least a preliminary skirmish with the smelter has been concluded. (See Art. 50.)

General bibliography for metals and metallic minerals follows:

1. *Mineral resources of the U. S.*, Annual, U. S. Bur. Mines.
2. *Mineral industry*, Annual, McGraw-Hill Book Co., N. Y.
3. *The marketing of metals and minerals*, J. E. Spurr and F. E. Wormser, McGraw-Hill Book Co., N. Y., 1925.
4. *Minerals yearbook*, U. S. Bureau of Mines Annual.
5. *Engineering and mining journal*, annual review numbers and weekly price lists.
6. *Metals handbook*, American Society of Metals (1939).
7. *World minerals and world peace*, C. K. Leith, J. W. Furness, C. Lewis, Brookings Institution (1943)
8. *Metal statistics*, American Metal Market, N. Y., Annual.
9. *Minerals in world affairs*, T. S. Lovering, Prentice-Hall, Inc. (1943).

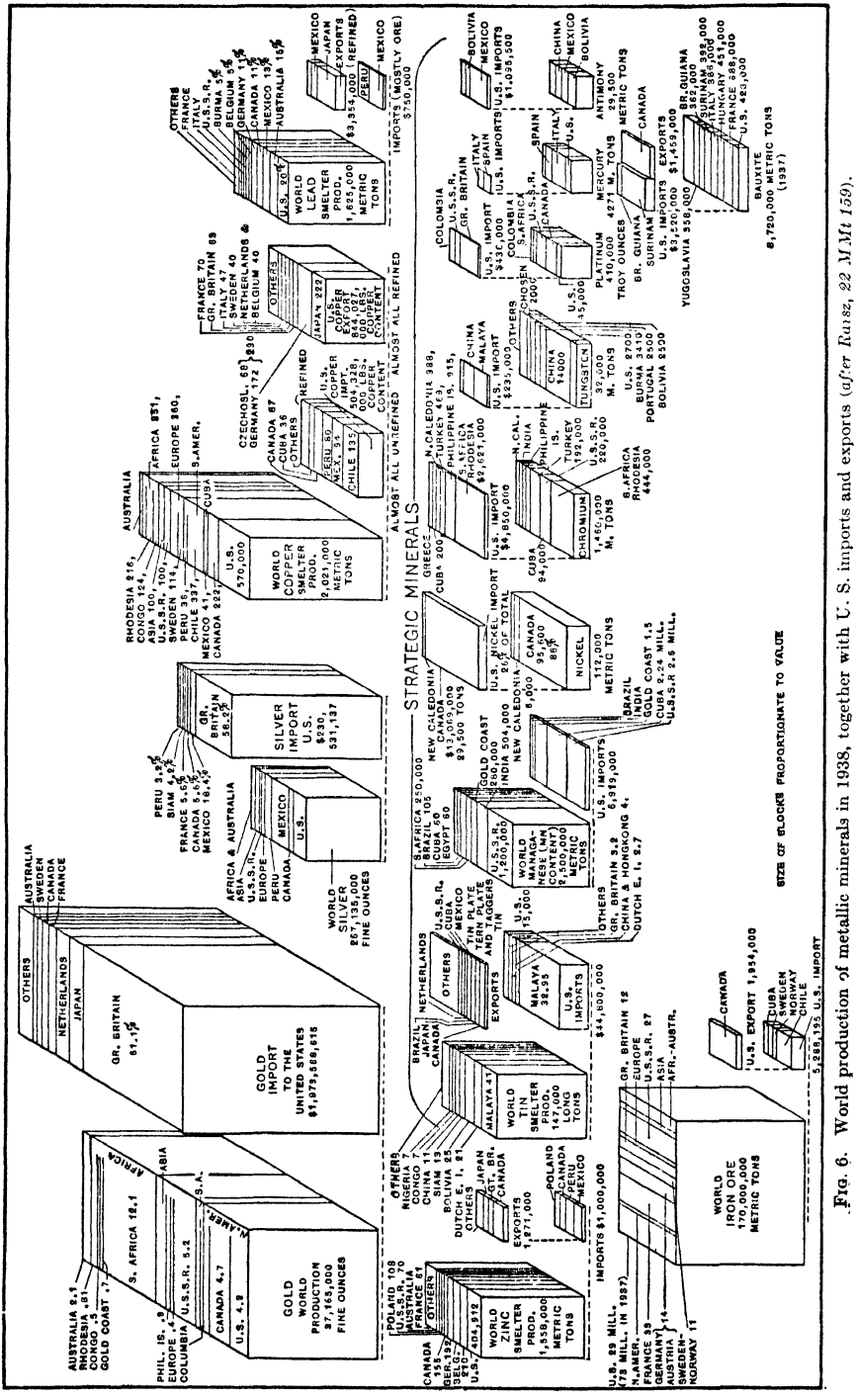

FIG. 6. World production of metallic minerals in 1938, together with U. S. imports and exports (*after Bureau, 22 MM 159*).

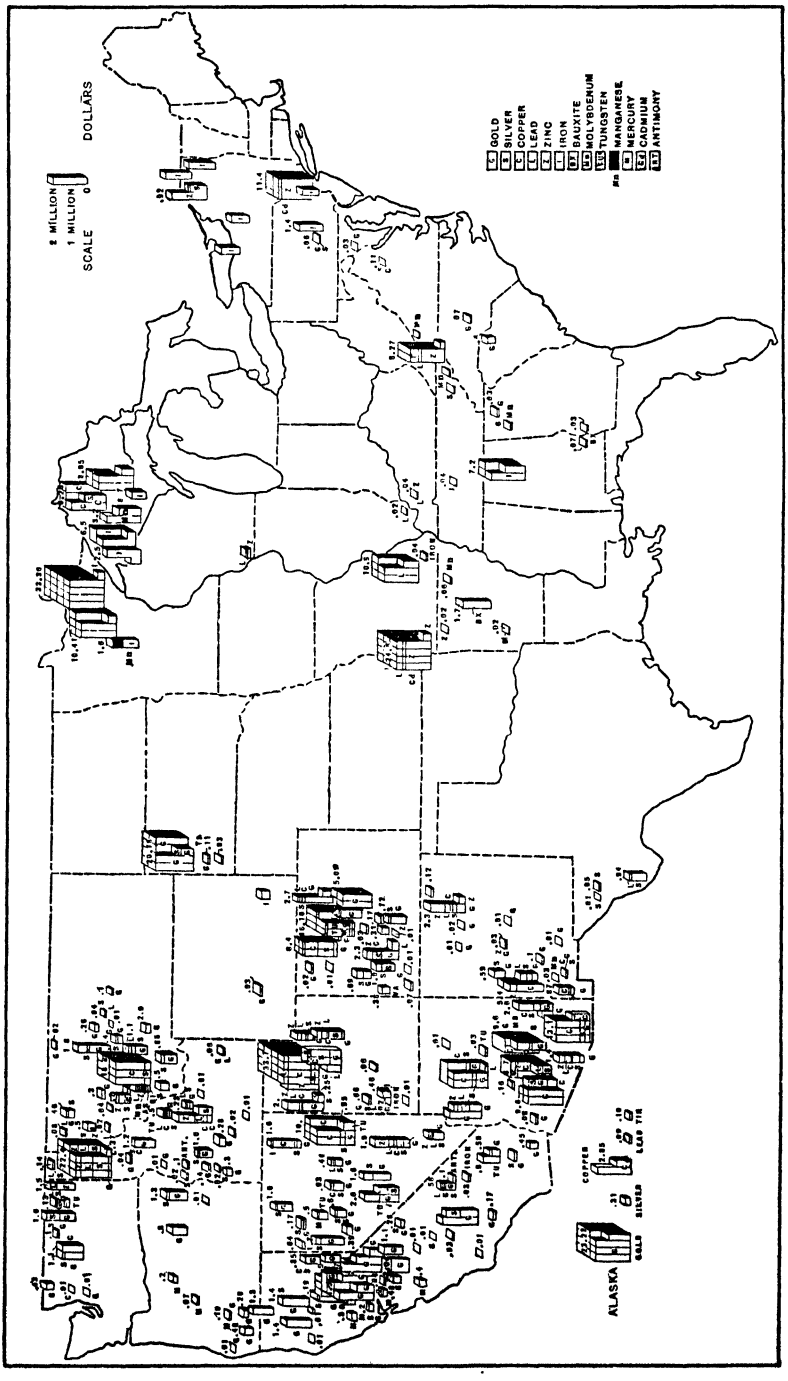

Figures indicate recovered values in millions of dollars.

FIG. 7. Production of metallic minerals in U. S. in 1938 (*after Raisz, 22 MMt 159*).

Ore. The quantity and quality of ore available, either actually blocked out in the mine or positively indicated by geologic data, determine not only whether a mill should be built but are also important factors in the problems of capacity and type of construction. The mineralogical character of the ore is controlling as to the treatment scheme. Capacity is determined by potential mine capacity, first cost of construction, and demand for the product. Type of construction is determined by kind and size of machinery, probable life of mine, and relative costs of different materials. See also Sec. 20.

Mineralogical character is important from the standpoints of distribution of the different minerals and relative quantities, as well as from their actual chemical nature and physical characteristics. It not only limits the number and kinds of processes available, but it determines at what grain sizes they may be applied and is an important element in determining whether or not they should be applied at one size and not another. For example, sphalerite cannot be recovered from a barite gangue economically by gravity or magnetic concentration, but flotation will make a ready separation. If, however, the sphalerite is coarsely disseminated, so that a considerable quantity of barite is free at, say, 3- or 4-in. size, it will almost certainly pay to hand-pick barite, even though such coarse tailing may be somewhat higher grade than would be made by flotation. The reason is that crushing and grinding from this size to flotation size and floating will cost 20 to 25 cents per ton at the best, and there would be further savings due to the increase in mill capacity thus effected.

Many similar but less clear-cut instances are to be found in the following flowsheets. The most interesting are those such as galena in lead-zinc ores and pyrite-chalcopyrite in copper ores substantially free of precious metals, where the aggregation of the galena and of the pyrite-chalcopyrite is coarse enough to permit gravity separations, and where, of course, separation by flotation is also possible. The decision has been, almost universally, against stage concentration; jigs and tables have been removed from many mills which had them installed originally, on the ground that the tonnage of concentrate removed was so small that not enough increase in grinding-mill and flotation capacity was effected to justify the expense of step concentration. But the question is now being reviewed in many mills and has been resolved in favor of early removal of concentrate in some of them. In gold mills such a decision has been almost universal.

The important physical characteristics of the ore minerals are specific gravity, magnetic permeability, and hardness.

Specific gravity. The important consideration is the CONCENTRATION CRITERION, *i.e.*, the ratio of the specific gravity of the heavy mineral, decreased by the gravity of the fluid in which separation is attempted, to that of the light mineral similarly decreased (*e.g.*, for galena and quartz in water $\frac{7.6 - 1}{2.6 - 1} = 4.1$). If this criterion is greater than two, reasonable separation can be effected without difficulty; if the ratio is less than 1.5, it is difficult, and, if less than 1.25, substantially impossible. With a criterion of 2.5, it is possible to get clean concentrate, but difficult to get low-grade tailing, and the tonnage of middling is large. With a criterion of 3 or more, gravity concentration is easy in all sizes down to the finest sands. No difference in specific gravity that exists between minerals is sufficient to make clean gravity separation of slime possible; with such fine particles the relation of surface to volume (and weight) is so large that the surface forces resisting settlement of the particles in fluids are sufficient to mask or completely nullify the effect of specific gravity. (See Sec. 15, Art. 3.) See Sec. 11.

Magnetic concentration is employed under two general conditions, *viz.*, (1) when the valuable mineral is magnetite, (2) when the valuable and waste minerals are close together in specific gravity, not amenable to sharp separation by flotation, and one is sensibly permeable to magnetic lines of force and differently permeable from the others. Magnetic concentration of highly permeable minerals can be practiced at all sizes below 2-in.; if the minerals are of low permeability, fine crushing is necessary. See Sec. 13.

Hardness. Differences in hardness as between valuable mineral and gangue are not utilized to any appreciable extent today in metal concentration, with the one exception of residual ores, where a clay-sand matrix is selectively disintegrated by water plus a little mechanical action, and separation is subsequently effected on a size basis. But see Sec. 14, Art. 11.

Hardness differences are important in many nonmetallic separations (Sec. 3).

Chemical composition is important from the concentrating standpoint for the reason that the selective effect in flotation is dependent (with minor exceptions, for which see Sec. 12, Art. 3) upon selective chemical reactions between the ore minerals and the flotation reagents in water. Hence the mineral to be floated must have a definite but relatively slight solubility in water, or be capable of chemical surface change to a soluble form, while the less soluble the gangue is the better. Water solubility of the necessary magnitude, either as natural mineral or as a spontaneously oxidized product thereof, is a property of

most nonsilicate minerals and of a few silicates. The relatively insoluble silicates and quartz are the most abundant gangues. See Sec. 12.

Other mineral characteristics occasionally utilized in concentration are COLOR and LUSTER, in hand sorting (Sec. 14, Art. 2); FRACTURE, in mechanical picking (Sec. 14, Art. 4), and in certain tabling and jigging operations (Sec. 11); ELECTRICAL CONDUCTIVITY, in electrostatic separation (Sec. 13, Art. 9); natural SIZE, in placer gravels; DECREPITATIVE PROPERTY; INTERFACIAL ENERGIES, as in diamond saving on greased tables (Sec. 12, Art. 17), or preferential partial SOLUBILITY in organic liquids, as in the Trent process (Sec. 12, Art. 15), or in inorganic liquids, as in amalgamation (Sec. 14, Art. 5).

Ratio of concentration. If the ratio of concentration (Sec. 19, Art. 24) of an ore is high, the flowsheet should be of such character that concentration is effected at one size, in order to reduce the variety of concentrating machines and to permit use of large units with correspondingly low capital and operating charges. Under such circumstances the crushing plant may be greatly simplified, a minimum number of screens and classifiers is necessary, and expensive elevation and horizontal transport of pulp are greatly lessened. The all-flotation porphyry-copper mills are typical of this type of flowsheet. If coarse tailing can be discarded and ultimate fine grinding is necessary, as, for instance, is the case at the MESABI IRON CO. (Fig. 90), ALASKA GASTINEAU (*Ed. 1, p. 124*), and AMERICAN ZINC (Fig. 102), some elaboration of flowsheet is justified in order to save the cost of grinding low-grade material. If the ratio of concentration is low and, as usually follows, the valuable mineral occurs in coarse aggregates, a complicated flowsheet with a multiplicity of screens, classifiers, and concentrating machines of varied types may be justified, on the grounds that coarse concentrate is usually of higher grade than fine, is more cheaply and efficiently smelted, that an appreciable tonnage is diverted from the grinding machines, and over-all recovery is bettered. The basis of the final statement is that a particle of, say, a size that would go into coarse-jig concentrate will, if broken, form some slime particles, and, since the recovery of slime particles is never perfect, a part of this broken particle is discarded as tailing, with resultant lowering of recovery. If slime recovery is efficient, this argument has but little weight, and inclusion of a coarse-concentrating machine must be justified on the first three grounds mentioned. Flotation is so efficient, and the size that can be handled on shaking tables has increased so greatly in recent years, that jigs have been eliminated from many mills Such elimination, in addition to simplification of flowsheet, permits removal of several screens and saves water, labor, considerable maintenance, floor space, headroom and may even lessen the total power consumption. Tables are almost always used with ores of low ratio of concentration, if gravity concentration is feasible, even when flotation is most efficient; the flotation machines can make a lower-grade tailing with low-grade than with high-grade feed, some burden is taken off the grinding machines, and the cost of dewatering granular table concentrate is much less than that for flotation concentrate.

Rich ores both require and can stand the cost of more elaborate treatment than poor ores; large ore bodies justify not only larger but more elaborate mills than small; and valuable substances such as gold, silver, and tin can, economically, be pursued further, *i.e.*, according to a more elaborate flowsheet, than lead, zinc, or iron. When freight rates are high or smelter penalties for impurities great, extensive (and expensive) treatment designed to raise the grade of concentrate is justified, or high-grade concentrate may be made at the expense of a low recovery, while with low concentrate-treatment and transportation charges, the flowsheet should be designed for high recovery, with less attention to the grade of the final product.

Tonnage is an important factor in flowsheet design. If tonnage is small, say less than 500 tons per 24 hr., the simplest type of flowsheet, only, should be considered, even when a resulting low ratio of concentration might indicate an elaborate mill. Multiplication of machines under such circumstances makes for small and relatively inefficient units and increases capital and operating costs out of proportion to the savings otherwise effected. When tonnage is large, a mill is designed in independent sections, the flowsheets of which are substantially the same, the tonnage going to each section being determined usually as that of the largest-tonnage unit or convenient group of units. The advantages of such design are: (1) that it permits one or more sections to be shut down for repairs, curtailment, or the like without affecting the efficient operation of the remainder of the plant, and (2) that responsibility for efficient operation of machines can be localized and a competitive spirit engendered among the workmen. Capacity is readily increased by adding sections without materially affecting current operations. Within any given section, experience indicates that operating and overhead costs decrease with increase in size (and capacity) of machine units up to the point where efficiency of the machine, operating or mechanical, begins to fall with further size increase. This follows from the fact that volume of machine working space tends to increase as the cube of linear machine dimensions, while first cost

increases in proportion to a figure between the first power and the square; that attendance is in almost direct proportion to the number of units rather than to their size; and that power consumption, while theoretically dependent only on the tonnage of material acted upon, actually increases for a given tonnage with decrease in size of the treatment units because of corresponding multiplication of seats of friction losses. Multiple sections permit study of new equipment and operation without too serious interference with the operation of the plant as a whole.

Water supply. Scarcity of water may dictate dry treatment when otherwise wet treatment is indicated; it may make it necessary to plan for a smaller daily tonnage than otherwise; and it usually requires inclusion in the flowsheet of a more or less elaborate water-reclamation system.

Essential elements of a flowsheet are crushing, grinding, concentrating, concentrate handling, sampling and weighing, storage, transportation of pulp, and tailing disposal. The first three of these elements, in any flowsheet, are primarily dependent upon the ore as delivered from the mine; concentrate handling depends upon the method of concentration and upon the after-treatment of the concentrate; sampling and weighing are matters of efficient mill control; storage and pulp transport are solely mechanical features, substantially independent of the character of the ore and of the process of concentration, but of supreme importance from the standpoint of smooth and efficient operation; tailing disposal may mean simply extending the tailing launder far enough away from the building so that it will not under-cut foundations, or it may involve elaborate water reclamation, sand-slime separation, dam-building, etc., to the extent of a sizable cost element. Prevailing trends, as indicated by the flowsheets, are presented in the following paragraphs.

Crushing is normally done in two or three stages, depending primarily upon the reduction necessary from run-of-mine maximum to grinding-mill feed-size, but secondarily upon capacity, additional machines being provided in series rather than in parallel in the majority of mills. Departures from the 2- or 3-stage norm are unusual and correspond to unusual conditions; low capacity is the ordinary explanation for a 1-stage plant, step concentration by gravity or magnetic methods or carry-over of an old crushing plant in a mill where such methods were formerly practiced explains the 4- and 5-stage mills.

Jaw and gyratory crushers are the usual primaries; metallic ores are, in general, too hard for other types. Gyratories with widely flaring heads, of reduction-gyratory or cone types, are almost universally found as secondaries. In 3-stage plants the final stage is about equally divided between rolls and high-speed flared-head gyratories, with the more recent choices probably leaning toward the gyratory type, but with the question of superiority far from settled when the last stage is in closed circuit to produce 1/4-in. maximum or finer.

Screening. In plants where no concentration precedes the grinding circuit the question of screens in the crushing plant is solely one of crushing and grinding efficiencies. It seems to be fairly well established that the maximum capacity of a crusher to crush particles coarser than its discharge opening is decreased by the presence of fines in the crusher feed, and that steel consumption is also higher with fines present. If crushers are oversize, the additional capacity is not needed, and headroom loss and screen operation may easily cost more than the saving in crusher steel. Most large plants scalp the feed to both primaries and secondaries; the trend in the smaller plants is not pronounced.

Closing circuit on the final crusher with a screen is the predominant practice, indicating almost universal recognition of the fact that tramp oversize in grinding-mill feed disturbs uniform operation, and that uniformity of operation is an essential prerequisite to efficiency; departures are almost all found in the small plants, where operating efficiency may not be as important as first cost, or in plants using large ball mills and feeding at relatively coarse sizes. The closing screen almost invariably serves to scalp the feed.

Use of screens in the grinding circuit is rare, but recent experimentation (Sec. 5, Art. 12) indicates possible economies where finished size is not too fine and differential grinding of heavy minerals is not desirable.

Grinding of the primary pulp stream is one- or two-stage, with choice definitely favoring one-stage work. Two stages are found where open-circuit rod mills are called upon to do the end of the crushing job and the beginning of grinding. Two-stage closed-circuit work is difficult to balance, and is rare, except when a very fine product or exceptionally hard ore seem to require it. See Sec. 5, Art. 12.

Regrind of middling is common, and may be carried out in several stages, depending in part upon requirements as to concentrate grade and in part upon the difficulty in making satisfactory tailing.

Concentration. There is less concentration at coarse sizes than simple considerations of technology and economy would seem to dictate. Where it is applicable, the entire job is generally done by flotation, and very cogent considerations seem to be necessary to cause departure from the custom. The reason seems to be that this makes for a simpler mill, less specialized knowledge is required of the labor crew, hence more machines can be put under a given man, and the small sacrifice in metallurgical efficiency is more than compensated for by reduction in pay-roll.

The usual scheme of concentration, whatever the specific method, is roughing out a middling on the primary pulp stream, and cleaning, with or without regrinding as necessary, to the grade desired. The extent to which the roughing treatment on the primary stream is carried is proportional, in general, to the unit value of the metal sought.

Storage. More or less adequate storage is provided in most plants, the degree increasing, in general, with the size of the mill. The important points are: (1) between mine and mill, to smooth out

Table 2. Physical constants of the economic metals *b*

Metal	Density, gm. per cc.	Relative hardness (diamond 10)	Melting point, deg. C.	Boiling point, deg. C.	Modulus of elasticity, tension, million lb. per sq. in.	Specific heat at room temperature, cal. per g. per °C.	Thermal conductivity, cal. per cm.^{2} per °C. per sec. at room temperature	Latent heat of fusion, cal. per gm.	Linear coefficient of thermal expansion per °C. at room temperature × 10^{-6}	Electrical resistivity, microhms per cc. at room temperature
Aluminum	2.70	2–2.9	660	1,800	10	0.2259	0.50	93	23.8	2.669
Antimony	6.62	3.0–3.3	630	1,380	11.3	0.0493	0.044	38.26	11.29	39
Arsenic	5.73	3.5	81 *a*	615	.....	0.0822	.....	.....	3.86	35
Beryllium	1.82	.....	1,350	1,500	42.7	0.0137	0.385	345.5	12.3	18.5
Bismuth	9.80	2.5	271	1,450	4.6	0.0290	0.0200	12.46	13.45	115
Cadmium	8.65	2.0	321	767	10.1	0.0547	0.217	13.17	29.8	7.59
Chromium	7.14	9.0	1,615	2,200	.....	0.12	0.65	31.75	8.4	13.1
Cobalt	8.92	5.5	1,480	2,900	.....	0.0989	0.165	58.38	12.08	9.7
Copper	8.94	2.5–3	1,083	2,300	16	0.0919	0.923	50.5	16.7	1.682
Gold	19.30	2.5–3	1,063	2,600	11.3	0.0308	0.707	16.11	14.4	2.42
Iridium	22.4	6–6.5	2,350	>4,800	7 5	0.0311	0.14	.....	6.7	6
Iron	7.87	4–5	1,535	3,000	30	0.1045	0.19	5.65	11.9	9.8
Lead	11.35	1.5	327.5	1,620	2.56	0.030	0.083	6.26	29.5	20.65
Magnesium	1.74	2.0	651	1,110	6.25	0.249	0.37	70	25.7	4.46
Manganese	7.2	5.0	1,260	1,900	.....	0.107	.....	36.6	23.0	5
Mercury	13.55	Liq.	39	357	.....	0.0332	0.0200	2.76	.....	95.8
Molybdenum	10.2	.....	2,620	3,700	50.2	0.0647	0.350	.....	5.49	4.77
Nickel	8.85	.....	1,452	2,900	30	0.112	0.140	73	13.2	10.9
Osmium	22.48	7.0	2,700	>5,300	.....	0.0312	.....	.....	6.1	9.5
Palladium	12.0	4.8	1,555	2,200	17.07	0.0587	0.161	35.8	12.0	10.8
Platinum	21.45	4.3	1,755	4,300	23.8	0.0319	0.166	26.9	9.1	10.6
Selenium	4.81	2.0	220	688	.....	0.084	.....	.....	37.0	12
Silver	10.5	2.6	960.5	1,950	10.3	0.0558	0.974	24.3	18.9	1.62
Tin	7.30	1.7	232	2,260	5.7–7.8	0.054	0.157	14.4	20.0	11.5
Titanium	4.5	.....	1,800	>3,000	.....	0.142	.....	.....	7.14	3
Tungsten	19.3	.....	3,370	5,900	60	0.034	0.476	44	4.0	5.48
Uranium	18.7	.....	<1,850	.....	.....	0.0276	.....	.....	.....	60
Vanadium	5.68	.....	1,710	3,000	.....	0.1153	.....	.....	.....	26
Zinc	7.14	2.5	419	907	12.4	0.0892	0.268	24.09	33.0	6.0

a 36 atm.; sublimes from solid state at 500° C. *b* Modified from *Metals Handbook*.

irregularities in mine-production rates; (2) between the crushing and grinding plant, to permit independent operation on an entirely different time schedule, if desired; (3) in the crushing plant to eliminate surging in the feeds to secondary crushers and fine screens; (4) directly ahead of the grinding mills, to permit constant feed thereto (this is effected by the provision noted under 2 above); (5) ahead of gravity and magnetic separators, to eliminate feed surges; (6) in flotation circuits, to give time for conditioning and promoting reactions, to smooth out rates of variation in feed assay, and to maintain reasonable constancy in the bulk feed rate to the cells and consequently in the treatment times.

Transportation of dry pulp is almost invariably by means of conveyors of the belt or articulated-plate type (pan or apron), the latter being used for very coarse material or where the conveyor must resist dumping impacts. Fine wet pulps are just as invariably pumped. In the coarse wet range, *e.g.*, for heavy circulating loads in primary grinding-mill circuits, bucket elevators of the wheel or belt type are favored over pumps, owing to smaller tendency to clog, and greater accessibility when a clog-up occurs.

Concentrate handling in flotation plants is almost standardized, comprising thickening in tanks by sedimentation and filtration of thickened pulp, with discharge of cake either directly into railroad cars or into bins. In a few smaller plants the thickener is eliminated. Granular concentrate is almost invariably dewatered initially by some form of mechanical classifier, usually of the drag or spiral type, with the sand product discharged into a draining bin suitably lined and otherwise guarded to prevent loss of fine concentrate with the drainings.

Tailing disposal, when this involves impounding and water reclamation, follows the pattern of preliminary dewatering, at as high an elevation as possible to minimize the cost of pumping back water; and transporting the thickened pulp by pipe (usually wood-stave) or launder to the impounding site, where a rough sand-slime separation is made, the sand is deposited so as to form a dam with minimum rehandling, and the slime is carried back into the pond. Additional water may be collected here by overflow weirs and seepage tunnels.

Properties of metals are given in Table 2. For properties of minerals see Sec. 22, Table 46.

3. ALUMINUM

Uses. Aluminum alloys are used for plates, structural shapes, and castings where lightness is essential, principally in airplane, automobile, and railway car construction. Aluminum foil has wide use in packaging butter, tea, cigarettes, etc., electrical transmission, cooking utensils, corrosion resisting vessels, and in crumpled form for heat insulation. The metal is also used in scientific instruments, alloys, lithographic work as a substitute for stone or zinc, deoxidation of steel in casting, Thermit welding, as a coating for steel plate, in explosives, as powder for paints and printing inks, etc. Bauxite, besides its use as a source of metallic aluminum, is used for manufacturing aluminum chemicals, for filtering and decolorizing petroleum fractions, for making abrasives such as Alundum, and for refractories.

Ores. Aluminum is widely distributed as a large constituent of many different minerals, but extraction is commercially possible at present only from bauxite and cryolite. Bauxite occurs as pisolites and claylike masses in pockets or lenses in residual clays. Cryolite occurs as lenses or veins in metamorphic rocks. At present bauxite ores form practically the only commercial source of aluminum. Principal economic occurrences of bauxite in the United States are in Georgia, Alabama, and Arkansas. Principal foreign localities are France, Italy, Dalmatia, Surinam, and British Guiana. Analyses range from 50 to 60% Al_2O_3, 2 to 20% SiO_2, 1 to 25% Fe_2O_3, and 1 to 3% TiO_2.

Production statistics are given in Tables 3, 4, and 5.

Selling. See Art. 50. PRICES (N. Y.) for 99% + virgin ingot metal over the period 1930–1942 have dropped steadily from 23.79¢ to 15¢ per lb.

Table 3. World production of aluminum (thousands of metric tons) (*MI*)

	1913	1918	1919	1921	1929	1933	1936	1937	1938
United States	29.5	102.0	90.0	28.8	102.3	38.7	102.0	133.0	130.4
Germany	0.8	25	15.0	10.0	31.5 *a*	18.9 *a*	97.2 *a*	127.5 *a*	180.0 *a*
Canada	5.9	15.0	15.0	6.0	36.0 *a*	16.2 *a*	26.9 *a*	42.5 *a*	55.0 *a*
U.S.S.R.	.....	.....	.....	.....	.....	4.4	36.0	45.0 *a*	49.0
France	13.5	12.0	2.2	10.0	29.1 *b*	14.5 *b*	28.3 *b*	34.5 *b*	43.0 *b*
Switzerland	10.0	15.0	15.0	10.0	20.7 *a*	7.5 *a*	15.7 *a*	24.0 *a*	28.0 *a*
Norway	2.5	7.5	4.0	4.0	29.1 *b*	15.4 *b*	15.4	22.9 *b*	26.0 *b*
Italy	0.9	1.7	1.7	0.7	7.4 *b*	12.1 *b*	15.9 *b*	22.9 *b*	25.8 *b*
United Kingdom	10.0	14.0	10.0	5.0	10.0 *a*	11.0 *a*	16.3 *a*	19.4 *a*	25.0 *a*
Japan	.....	.....	.....	.....	.....	.....	5.0	10.5	20.0
Austria *a*	5.0	8.0	5.0	2.0	2.7	0.9	1.9	4.0	5.0
Others *c*	.....	.....	.....	.....	.....	.....	3.3	3.2	4.1
Total	78.1	200.3	167.9	76.5	270.0	141.8	363.9	489.5	588.0

a Estimated.
b Official Statistics.
c Includes Hungary, Spain, Yugoslavia, and Sweden.

Table 4. World production of bauxite (in thousands of metric tons) (*MI*)

	1913	1918	1919	1921	1929	1933	1936	1937	1938 *a*
France	309.2	145.0 *c*	159.0	84.9	666.3	490.5	649.5	688.2	682.2
Hungary	*d*	*d*	*d*	*d*	389.2	72.4	329.1	451.6	540.7
Surinam	.....	.....	.....	.....	219.6	106.4	234.8	392.4	371.6
Yugoslavia	.....	164.6 *fb*	*d*	51.0 *g*	103.4	86.5	292.2	354.2	396.4
Italy	7.0	7.8	3.0	49.1	192.8	94.8	262.2	386.5	383.0
British Guiana	.....	4.3	2.0	20.0 *a*	220.0	42.0	212.7	366.7	350.0
United States	213.6	615.4	382.6	141.8	371.6	156.7	378.0	427.0	317.0
Netherlands E. Indies	.....	.....	.....	.....	.....	.....	133.7	199.0	300.0
U.S.S.R. *a*	.....	.....	.....	.....	.....	50.0	203.2	230.0	200.0
Greece	.....	.....	.....	.....	.....	.....	129.9	137.4	150.0
Germany	.....	14.4	9.4	2.0 *c*	6.9	1.7	12.4	18.2	100.0
Others *e*	9.6	11.4	12.9	9.3	13.5	5.8	24.5	37.9	25.5
Total	530.8	962.9	568.9	360.7	2,185.0	1,063.0	2,865.0	3,725.0	3,810.0

a Partly estimated.
b Unofficial.
c Estimated.
d Figure not available.
e Austria, Brazil, India, Rumania, Spain, Ireland, United Kingdom.
f Austria.
g Exports.

Table 5. Production of bauxite in United States (thousands of long tons) (*USBM*)

	1913	1918	1919	1921	1929	1932	1936	1937	1938
Arkansas	182.8	562.9	333.5	124.8	351.1	89.8	354.9	402.2	293.3
Georgia, Alabama	27.4 *a*	42.8 *a*	43.1 *a*	14.7 *a*	14.7	6.6	17.1	18.0	18.1
Total	210.2	605.7	376.6	139.6	365.8	96.3	372.0	420.2	311.4

a Includes Tennessee if any.

Treatment. Practically all the bauxite now mined is of sufficiently high grade so that no mechanical separation from associated minerals is necessary. In the past, loose mixtures of bauxite and clay have been concentrated in log washers, but the low-grade deposits cannot compete at present. Treatment at one large plant consists in coarse breaking, the hard rock in gyratories, the soft in Fairmount crushers; followed by drying in coal-burning rotary kilns, about 7×50-ft., at a temperature near 1,100° F.; thence to a cooling conveyor and shipping bins. Residual mechanically held moisture is from 0.5 to 1%. The bauxite also contains from 15 to 33% combined water, which, if the ore is to be used for abrasives and refractories, is driven out by heating at about 2,000° F. in 6×60-ft. kilns, leaving a total moisture content of about 0.5%. Simpler methods of the same general character are followed at smaller plants. Some mines ship the ore as mined, but this is extremely uneconomical, if the haul is long, on account of the high water content.

Aluminum metal is obtained from high-grade bauxite by leaching with aqueous alkali, precipitating $Al(OH)_3$ from the extract, and calcining to Al_2O_3, which is electrolyzed. Metal grades range from 94 to 99.9% Al, according, principally, to the amounts of Fe and Si carried into the electrolytic cell.

A method of producing Al from low-grade siliceous iron-bearing bauxites and from certain clays is proposed by Klein (*PhD thesis, CU, 1941*). It makes use of the fact that ferric chloride is selectively abstracted from aqueous HCl solutions of Fe^{+++} and Al high in chlorides by water-immiscible organic solvents such as *n*-butyl acetate. Evaporation of the residual aqueous solution and calcination of the resulting $AlCl_3 \cdot 6H_2O$ produces Al_2O_3 of sufficient purity for electrolysis.

4. ANTIMONY

Uses. Antimony metal has little or no use as such. The principal use is in alloys such as Babbitt metal, Britannia metal, shrapnel lead, hard lead for plumbing and similar purposes, type metal, white metal, pewter, storage-battery plates, solder and various other soft metals used in making foil, metal tubes, etc. Antimony persulphide is used in vulcanising rubber, the trisulphide for safety matches, and the powdered metal, trioxide, and trisulphide are all used for pigments.

Ores. The economic minerals are STIBNITE, SENARMONTITE, VALENTINITE, and CERVANTITE. Ores are found in most countries, but China and Mexico produce two-thirds of the world supply. The Chinese deposits consist of stibnite of remarkable purity, occurring as pockets and bunches in dolomitic limestone.

Production. See Table 6.

Table 6. World production of antimony (metric tons) (*MI*)

	1913	1918	1919	1921	1928	1932	1936	1937	1938
China *b*	13,032	15,635	7,767	14,752	22,988	12,962	17,088	15,146	7,983
Mexico *a*	2,340	3,269	628	45	3,578	1,338	7,303	10,638	8,034
Bolivia *a*	30	4,770	105	336	3,543	1,470	3,860	4,230	9,436
United States		45	0	0	42	380	685	1,148	589
Algeria *a*	186	2,218	723	103	26	267	1,330	1,088	1,026
Czechoslovakia *a*					1,200	600	1,037		
Peru *a*		160	33	7	184	19	785	920	673
Turkey *a*	240 *e*	400 *e*	400 *e*	400 *e*	100		570	750	498
Yugoslavia *a*					320		740	723	3,424
Italy *c*	360	404	10	40	206	288	532		925
Australia	970	696	613	190	50	61	179	266	585
France *a*	5,170	1,634	990	1,118	1,155	640			
Others *f*	2,188	179	132	601	280	470	199	197	
Total	24,516	29,400	11,391	17,592	33,800	18,500	34,500	37,000	34,500

a Metal content of ore produced.
b Total exports, regulus, crude, and oxide.
c Metal, sulphide, and oxide produced.
e Asia Minor.
f Includes Greece, Morocco (Sp.), Canada, Spain and Portugal, Union of S. Africa, Japan, Hungary, Austria, Bulgaria, India.

Prices. Average prices per lb. f.o.b. New York from 1930 to 1942 have ranged: 7.67¢ (1930), 5.62¢ (1932), 15.35¢ (1937), 12.35¢ (1938), 15.55¢ (1942).

Treatment (*8 AIM 196*). Only high-grade ore is mined, most of which is sufficiently concentrated by crude hand picking. If further concentration is necessary, it may be effected readily by liquation at a low temperature. Both methods are extremely wasteful (liquation losses may run as high as 30% antimony) but only high-grade material can be shipped from isolated districts to the smelters, and even in the period of high prices during 1914–1918 it was considered more economical to bear the losses attendant upon these crude methods than to practice more refined (and hence more costly) concentration methods.

Antimonial or hard lead containing 10 to 20% Sb is obtained as a by-product in smelting and refining antimonial-lead concentrate.

Bolivian antimony mines (*2 #4 FMQ 39*) are small; the sulphides occur in small quartz veins in black slate; gold is frequently present. The MALLIRI mill, near Challapata, concentrates by hand sorting, crushing in a quimbelete, hand jigging and buddling, in order, making 75 tons per mo. of 65%-Sb concentrate. At COBIJA near Oro Ingenio, the treatment comprises, in order, a sorting floor with hand jigs and buddles, a Krupp ball mill for middling, jigs and tables. In general losses are high owing to the attempt to make high-grade concentrate (60 to 65% Sb) and costs (1939) ranged from $20 to $30 per ton of concentrate, of which about 40% was for labor.

Methods used to recover metal from concentrate comprise roasting to oxide and subsequent smelting of the oxide in crucibles or small reverberatory furnaces with soda ash and charcoal (see *Bray; Hayward; Liddell*).

5. ARSENIC

Uses. The principal uses are for insecticides such as Paris green and lead arsenate for plant sprays, and calcium arsenate for boll-weevil extermination. Sodium arsenite is used in considerable quantities on railroads and highways as a liquid weed killer. The white oxide is used in glass making to mask the coloring effect of metallic oxides and impart brilliancy. It is also used in making sheep and cattle dips. The red and yellow sulphides are used for pigments in paints, calico printing, dyeing, and tanning. Small amounts of the element are used for certain alloys, principally lead shot.

Ores. Arsenic occurs as a constituent of 30 or more minerals (Hess, *MR, 1914, p. 957*) but the principal sources are arsenopyrite, arsenides, and sulpharsenides associated with ores of lead, copper, and the precious metals, the arsenic being a by-product. Arsenopyrite is mined for the arsenic content in a few places. Realgar and orpiment occur as vein minerals associated with barite, stibnite, quartz, pyrite, and precious metals, but there is little or no mining of such deposits for arsenic content.

Production. See Table 7.

Treatment. Arsenical fumes and dust from bag houses and Cottrell precipitators in lead and copper smelters are calcined or roasted in reverberatory or special furnaces and the fume condensed in an ordinary flue system. This fume is known as black dust and contains about 90% As_2O_3. It is refined to >99% As_2O_3.

Table 7. World production of white arsenic (thousands of metric tons) (*MI*)

	1913	1918	1919	1921	1929	1933	1936	1937	1938
United States *a*	2.3	5.7	5.5	4.3	13.2	9.8	14.1	16.0	11.9
Japan *c*	.....	0.2	0.8	1.4	2.0	2.7	2.9	.....	.....
Sweden	.....	.....	.....	.....	.....	0.9	8.6	.....	.....
Mexico	.....	1.9	2.2	0.8	12.8	4.7	8.5	10.8	8.9
Belgium *b*	.....	.....	0.1	0.5	3.7	2.6	2.7	3.0	2.7
Germany *b*	1.9	3.6	1.5	2.0	2.6	2.7	2.7	2.9	2.8
Australia	.....	.....	0.1	0.2	0.3	1.8	3.7	3.4	.....
France	4.4	1.0	0.7	0.3	3.4	8.6	9.8	.....	.....
Canada	1.5	3.2	3.1	1.4	1.7	0.6	0.6	0.6	1.0
United Kingdom	1.7	2.4	2.6	1.0	1.0	0.1	0.2	0.1	0.1
Others *d*	1.5	0.4	1.7	1.8	4.1	2.2	1.0	0.8	0.5
Total	13.3	18.4	18.3	13.7	44.8	36.7	54.8	.....	.....

a Sales. *c* Includes Chosen.
b Exports. *d* Includes Brazil, China, Greece, Portugal, Rhodesia, Spain, Union of S. Africa.

6. BERYLLIUM

Uses. Metallic beryllium and most of the alloys in which it is a major component are brittle. A Cu-Be alloy (*ca.* 2.25% Be in which the Be acts as a precipitation hardener) is being used where the properties of the alloy will justify its high price. The alloy can be manipulated untreated, and when heat-treated possesses great strength, high resistance to fatigue, wear, and corrosion, combined with good electrical conductivity and nonsparking characteristics. The principal uses so far developed are for springs, high temperature valves, motor-brush holders and collector rings, and tools. Alloys with aluminum, nickel, and other metals are also available. The first are becoming important in the airplane industry. Beryllium oxide and other compounds are used in small quantities in glass and ceramic glazes, in super-refractories, and as high-duty abrasives.

Ores. The total amount of beryllium in the earth's crust is probably equal to the total of copper, lead, and zinc combined. Commercial minerals are beryl, $3BeO \cdot Al_2O_3 \cdot 6SiO_2$ (one variety of which is the gem emerald) and phenacite, both of which are found in many pegmatite dikes, but the minerals contain low percentages of Be, and few pegmatites contain over 1% of the metal.

Production comes from U.S.S.R., Germany, France, and Brazil. Scattered deposits are found in S. Dak., Pa., N. Y., N. H., Mass., and Conn. The U. S. Bureau of Mines estimates 1937 production of metallic beryllium at not over 15,000 lb.

Prices (1941): $47 (lump) and $50 (cast bars) for metal 96%+ Be. Also sold as alloys with Cu, Fe, Ni, or Al at substantially the prices of the contained Be plus the price of the alloy metals.

Treatment. No method of concentration other than cobbing and hand sorting of relatively coarse crystalline beryl has been practiced, but flotation of beryllium mineral experimentally has been described (Sec. 12, Art. 53). Present methods of treatment of concentrate comprise reaction with acid to form a water-soluble salt, *e.g.*, $BeSO_4$ or Na_2BeF_4; concentration of this salt as by fractional crystallization or preferential precipitation; reduction from salt to metal by carbon or by electrolysis. For detail see *Hayward; Bray.*

114026

7. BISMUTH

Uses. Metallic bismuth is used almost exclusively in making low melting-point alloys with tin, lead, cadmium, and mercury. Bismuth compounds are used extensively in medicine. They find some use also in porcelain and glass making, and in pigments.

Ores. The principal minerals are the native metal and bismuthinite, bismite, and bismutite. The principal deposit of the world is in Bolivia, where bismuthinite occurs in veins associated with tin and silver minerals. Native bismuth and bismuthinite commonly occur in veins associated with pyrrhotite, pyrite, molybdenite, wolframite, and precious metals. Native bismuth is sometimes found in sluice boxes. Carbonates and oxides of bismuth occur as residual deposits from leaching of rocks containing primary bismuth minerals. In such occurrences the bismuth is often associated with clays.

Production. Domestic production is never reported. In 1937 it was probably substantially increased owing to increase in lead-smelting activity. Imports of metal were 56.7 short tons in 1936 and 51 tons in 1935 as against a range in the preceding 8 years of 3.5 to 23.8 tons. The principal foreign producer is Peru, 381 metric tons in 1936 as compared with about 165 tons each from Canada and Mexico. Other scattered production is reported from Bolivia, Japan, Spain, and Australia.

Treatment. Domestic sources are lead- and tin-refinery slimes. These are fused with caustic soda and soda ash (also sodium sulphide if Cu is present); cast into slabs and electrolyzed in an acid solution of $BiCl_2$ with Bi or graphite cathodes. If the crude is a sulphide concentrate, this is roasted to drive off As, Sb, and most of the S and then smelted in a small reverberatory in a reducing atmosphere with carbon (and iron, if much S is present). See *Bray; Hayward; Liddell.*

8. CADMIUM

Uses. Principal uses are in making alloys of low-fusing temperature; as an alloy with Cu for use in transmission lines and other places where added strength and hardness are important; in type metal; as a deoxidizer in some nonferrous alloys; in electroplating hardware, automobile parts, and the like by the Udylite process, to resist rusting; in the standard Weston cell; in accumulator cells; as a constituent of Cd-Ni bearing metals; in photography; and, in the form of sulphide, as a yellow or orange pigment.

Ores. Cadmium is obtained both in this country and abroad exclusively as a by-product from zinc smelting and refining, or from baghouse dust at lead smelters where zinc is a constituent of the ores treated. Siebenthal (*MR*, 1921) states that cadmium occurs in all zinc ores in the proportion of about 1 of cadmium to 200 of zinc.

Treatment. Fractional distillation of blue powder and refractionation of the distillate; or solution of the oxide in acids and precipitation of the metal chemically or electrolytically. For detail see *Liddell.*

Production. See Table 8.

Prices (per lb.): 1932, 55¢; 1938, 80¢; high in 1937, $1.60.

Table 8. World production of cadmium (thousands of pounds) (*MI*)

	1929	1932	1935	1936	1937	1938
United States; metal	2,841	800	3,477	3,364	3,996	3,750
in compounds	433	260	507	627	828	430
Mexico	1,413	190	1,317	1,180	1,366	1,681
S. W. Africa	*b*	*b*	320	210	961	1,481
Germany	*b*	*b*	364	668	800	1,000
Canada	774	65	580	786	745	699
Belgium	*c* 5	274	333	450	750	570
Poland	8	76	266	310	274	538
Australia	446	354	490	555	464	408
Norway	.....	251	260	224	340	458
United Kingdom	5	8	*b*	501	274	275
France	130	108	267	187	217	256
U.S.S.R.	*b*	*b*	26	250	250	250
Others *a*	14	.....	42	172	200	182
Total	4,700	2,300	6,600	7,800	9,300	9,000

a Includes Italy, Japan, Netherlands. *b* Not available.
c Exports of domestic product.

9. CAESIUM

Uses. No commercial uses are recorded; it has some use in scientific laboratories.

Occurrence. The only mineral containing a large proportion of Cs is pollucite (35% Cs_2O), a rare constituent of granite on the island of Elba, and at Hebron, Me. Cs is a fairly common but minor associate of the other alkali metals in salt beds, brines, ashes, cement flue dust, etc.

Treatment. Analytically, Cs, Rb, and K can be separated from Li and Na by differences in their chloroplatinates, or alums; Cs from Rb by the same means, by oxalates or tartrates, or by the slightly soluble double salts of Cs with Pb, Sb, or Sn (*II Mellor, 451; Liddell*).

10. CERIUM

Uses. Cerium metal added to molten cast iron is said to aid oxidation of impurities, increase fluidity, and increase hardness of the casting. Ferrocerium (63% Ce, 35% Fe) is a pyrophoric alloy. Ce-Al and Ce-Mg alloys cast well and are hard. Cerium acetate has mildew- and moth-proofing properties; the fluoride protects textiles against acids and corrosive vapors; the nitrate is used in gas mantles and in tanning, and in dyeing and printing textiles; the oxide is used in special ceramics and optical glasses, and in nail polishes; the sulphate is a useful catalyzer, and is also used in photography; the tungstate is a catalyst for organic reaction, and improves the brilliancy of carbon lights (flaming electrode).

Occurrence. In monazite sands, Art. 43.

Treatment. Chemical treatment of the sand concentrate. See *Liddell.*

11. CHROMIUM

Uses. The rapid growth in the use of chromium plating and of "stainless" steels (usually carrying 14 to 18% Cr) has greatly increased the demand. Ferrochrome, an alloy composed chiefly of iron and chromium, with small amounts of carbon, silicon, and other impurities, notably manganese, is widely used for hardening steel for railway wheel tires, wearing parts in crushing machinery, and other steels where toughness and hardness are essential. Chromite bricks are highly refractory and are used for furnace linings. Chromates and bichromates are largely used as red, yellow, and green pigments for dyeing, calico and wall-paper printing, painting, and pottery. Chromium compounds are largely used in tanning and to some extent in medicine. Use of stainless steel and rustless iron, both containing 12 to 14% Cr, is increasing rapidly. Chromizing by a process similar to zinc sherardizing and aluminum calorizing has been accomplished, and chromium plating is well established. Both chromized and chrome-plated iron and steel resist atmospheric and sulphur corrosion; the latter resists acid and ammonia fumes but not electrolytic corrosion in mineral acids.

Ores. Chromite ($FeO \cdot Cr_2O_3$) in highly basic igneous rocks or in serpentine is the only ore. The natural mineral is rarely pure chromite, Cr_2O_3 being replaced by Al_2O_3 or Fe_2O_3. As a consequence, the highest grade of ore contains only about 55% Cr_2O_3 and the Cr_2O_3 content in salable ores runs down from this figure to 38 to 40%. American chromite concentrate is usually picotite $(MgFe)O \cdot (AlCr)_2O_3$ instead of chromite; it is not suitable for making ferrochrome. There is a possibility, however, of displacing ferrochrome by the electrolytic metal; this would tend to keep down the carbon content of the alloy, which would be especially desirable with Cr alloys.

Production by countries is given in Table 9. Normal domestic production has been negligible on account of import competition from high-grade deposits, but considerable low-grade ore is available, and war-time plants have been built (1943). Russia, Rhodesia, Turkey, and the Union of South Africa are the major producers.

Selling. See Art. 50. Prices of ferrochrome (60–72% Cr), per long ton: 1932, $154 (low, $120); 1939, $156.

Table 9. World production of crude chromite (thousands of metric tons) (*MI*)

	1913	1919	1921	1929	1932	1935	1936	1937	1938
U.S.S.R. *g*	15.0	*d*	2.2	52.9	62.1	184.4	217.0	.....	.....
Rhodesia	63.4	32.0	45.5	265.9	15.7	105.9	183.4	275.6	186.0
Turkey	26.4	3.5	*e* 10.0	16.2	55.2	150.5	163.9	192.5	213.6
Union of S. Africa	.....	.....	1.1	64.0	19.4	90.4	175.7	168.6	176.6
Cuba	.....	14.7	0.6	*c* 53.8	0.5	*c* 48.5	*c* 71.1	*c* 94.6	*c* 40.1
Philippine Islands	.....	.....	.....	.....	.....	1.3	11.9	69.9	66.9
Yugoslavia	.....	.....	.....	43.0	43.9	52.4	54.0	59.9	58.5
India	5.7	37.0	35.3	50.4	18.2	39.8	50.3	63.3	44.8
Greece	6.3	4.2	8.0	24.2	1.6	29.8	47.3	52.6	42.4
New Caledonia	63.4	23.5	29.5	52.6	69.4	55.3	47.8	48.0	52.2
Japan	1.3	6.0	3.4	9.2	12.5	36.3	38.5	.....	.....
Brazil *a*	.....	4.9	.....	0.1	.....	.....	3.9	3.0	0.9
Canada *b*	.....	8.7	2.5	0.1	0.1	1.0	0.8	3.9	.....
Cyprus	.....	.....	.....	2.5	0.5	1.2	0.5	1.6	7.5
United States *b*	0.3	5.2	0.3	0.3	0.2	0.5	0.3	2.4	0.8
Australia	.....	.....	.....	0.1	0.1	0.6	0.4	0.5	1.0
Others *f*	0.3	2.2	0.4	.....	0.7	0.3	0.3	2.5	.....
Total	182.1	141.9	138.8	635.2	298.5	798.2	1,067.7	1,300.0	1,100.3

a Exports.
b Shipments.
c Imports into U. S.
d Not available.
e Estimated.
f Includes Bulgaria, Guatemala, Norway, Rumania, Bosnia, Indo-China.
g Year ending Sept. 30.

Treatment. The foreign ores are mostly from high-grade deposits that require no concentration other than hand sorting. Chromium ores respond to simple gravity concentration, and some such concentration is necessary with many of the domestic ores. A typical flowsheet involves crushing and rod milling to 20 *mog*, followed by close hydraulic classification and tabling. A 50% Cr_2O_3 concentrate can be obtained readily unless the chromite itself is of too low grade. Concentrate is sintered with soda ash to form sodium chromate, which is leached out with hot water, evaporated to a concentrated solution, oxidized to dichromate with sulphuric acid, and separated from Na_2SO_4 by fractional crystallization. Dichromate is decomposed to Cr_2O_3 by fusion with S and the oxide reduced to metal by charcoal, Al, or H, or the metal may be deposited electrolytically from a solution of the chloride. See *Hayward; Liddell; Bray.*

Krome Corp.—D.P.C. plants, Fig. 8 (*144 #9 J 63*).

Location: Coos County, Oregon.

Capacity: 2,000 t.p.d. roughing plant; 400 t.p.d. finishing plant.

Ore: Black sands containing chromite, magnetite, ilmenite, zircon, garnet, and other heavy silicates.

Assays: Feed, 3 to 20% Cr_2O_3, average 6%; rough concentrate, 25% Cr_2O_3, Cr/Fe = 1.65; finished concentrate, 40% Cr_2O_3.

Recovery: 85% in gravity mill.

Ratio of concentration: 5 : 1 in gravity mill.

Water: Principally from a nearby creek; 1,500 g.p.m. pump from tide-water 6,000 ft. against 460-ft. head and thence by gravity for standby.

Power: Purchased; comes at 23,000 volts.

Buildings: Two, separated 9 mi.; sites, gently sloping.

Transport: Mine to mill, 500 ft. max., by 12-cyd. Carryalls; gravity mill to magnetic mill, 9 mi. by 10-ton trucks.

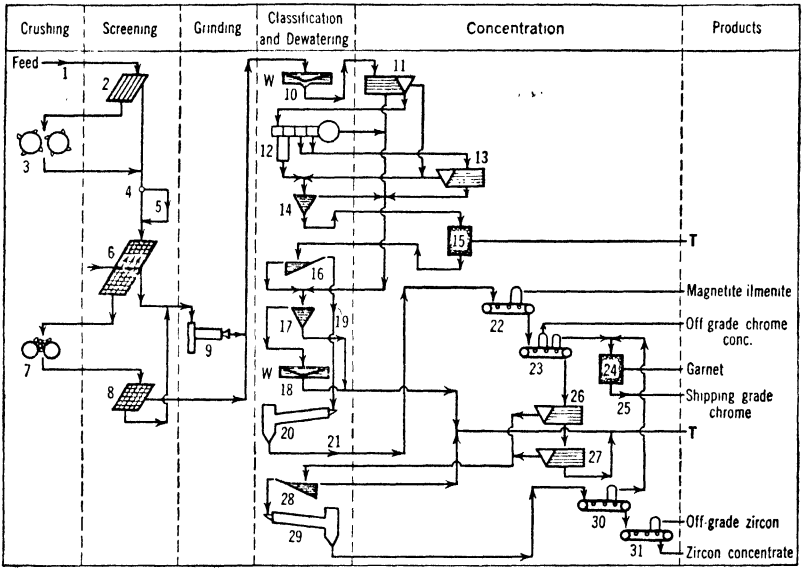

Legend for Fig. 8:

1. 12-cyd. Carryalls used for mining.
2. Steel-rail grizzly.
3. 1 @ 30×48-in. slugger rolls.
4. Conveyor with double-discharge tripper to divert part, all, or none of material to a stockpile.
5. Stockpile; tunnel conveyor with traveling-belt feeder.
6. 1 @ 3 × 16-ft. revolving-screen scrubber, alloy-steel plates, 1-in. aperture.
7. 1 @ 24×20-in. rolls.
8. 6 @ 4×10-ft. vibrating screens, 20-m.
9. 1 @ 5×10-ft. rod mill.
10. 1 @ 16-ft. hydro-bowl classifier.
11. 14 @ 8×30-ft. Overstrom shaking tables in parallel.
12. Fahrenwald classifier, 6-pocket.
13. 2 @ No. 6 Diagonal-deck tables.
14. 1 @ 8-ft. Allen cone.
15. 4 @ 56-in. Fagergren flotation cells used as scrubbers.
16. 1 @ 4×20-ft. rake classifier.
17. 2 as (14).
18. 1 @ 8×30-ft. thickener.
19. 10-ton trucks; storage bins.
20. 1 @ 5×26-ft. rotary drier.
21. Screw conveyors; elevators; surge bins.
22. 5 @ 30-in. Stearns IMR magnetic separators.
23. 3 @ 40-in. Stearns KST magnetic separators.
24. 1 @ 6-cell No. 21 Denver Sub-A machine; reagents, AM Coco C, Emulsol 607-L, cresylic acid, coal-tar creosote; 22% solids.
25. 1 @ 3×20-ft. rake classifier for dewatering; stockpile.
26. 3 as (13).
27. 1 as (13).
28. 1 @ 1 1/2×18-ft. rake classifier.
29. 1 @ 3×26-ft. rotary drier.
30. 1 as (23).
31. 2 Stearns belt-type magnetic separators.

FIG. 8. KROME CORP.—D.P.C. plants.

Summary. Disintegration and scrubbing to separate granular material for tabling; table concentrate enriched by dry magnetic separation and flotation to skim out garnet. Zircon-bearing material tabled and concentrate enriched by skimming out magnetic content.

12. COBALT

Uses are as metal, oxide, and salts. Metal is used for STELLITE (an alloy with iron and chromium), high-speed tool steels, cobalt-steel and cobalt-alloy magnets, age-hardening alloys, HARD-FACING alloys for building up worn parts, anodes, and as a bonding material in the manufacture of tungsten-carbide products. Powdered cobalt metal alone or in combination with other metals is used extensively in Europe as a catalyst in the synthetic production of gasoline from coal. As oxide, cobalt finds extensive use in the ceramic industries for imparting a blue color to porcelain and enamels and to neutralize the yellow color due to iron silicates in enamel coatings. The silicate of cobalt, produced from the oxide, possesses a blue color, the depth of which varies with the cobalt content. Cobalt oxide is an efficient catalyst for the oxidation of ammonia. Cobalt salts, principally sulphate, resinate, and lineoleate, are used as driers in the linoleum, paint, and varnish industries; they are also mixed with soil dressings in sheep pastures to combat anaemic diseases. They are useful for electroplating because the metal plates rapidly, and in combination with other metals, especially nickel and chromium, yields deposits unusually bright, hard and durable.

Ores. The principal ore minerals are sulphides and arsenides. Usually the nature and extent of the associated minerals determine the economic value of a cobalt deposit. In the complex cobalt ores at Cobalt, Canada, the cobalt minerals identified are: smaltite, erythrite, and cobaltite, associated with minerals of silver, nickel, arsenic, bismuth, antimony, copper, lead, and iron. The ores carried 2 to 11% cobalt, and from 10 to 10,000 oz. silver per ton. Concentrate shipments from 1930 to 1938 averaged 8 to 10% cobalt; silver content fell from about 2,000 to 50 oz. per ton. In 1941 the concentrates averaged 10 to 15% Co and 25 to 50 oz. of silver. The ores in Northern Rhodesia and Belgian Congo contain copper sulphides; cobalt content ranges from 2 to 4%. Flotation, permitting the mining of lower-grade ores, has increased ore reserves. Each of the African companies is reported as capable of producing at least 2,500 tons of cobalt metal annually should the market demand that quantity.

The ores of French Morocco have not as yet been fully developed beyond about 1,000 tons per year. The ore ranges from 20 to 55% arsenic, 10 to 15% cobalt, 0.5 to 6% nickel, traces of copper, and considerable gold.

Production was 4,800 tons in 1939 (calculated on cobalt element). Northern Rhodesia produced 30%, Belgian Congo 30%, French Morocco 20%, Canada 15%, Burma 5%, and smaller quantities from Finland, Sweden, and New Caledonia. In 1940 only about 10 to 15% of all cobalt produced was in the form of oxides. In 1941 cobalt was produced in the United States from African ores concentrated in smelting to a copper-cobalt-iron metallic residue containing 40% cobalt. Canadian concentrate is mostly shipped to refineries in the United States.

Selling. The cobalt products of Cobalt, Canada, are offered for sale at prices ranging from 70¢ per lb. of cobalt in 8% cobalt ores to $1.10 per lb. in 14% cobalt concentrate. The copper-cobalt-iron alloy produced from the ores of Africa until the end of 1939 was shipped to Belgium, but recently shipments of the alloy have been made to the United States and Canada for recovery of the cobalt. The ores of Morocco were until 1940 shipped to Belgium for preliminary treatment, and the final treatment of refining was completed in France.

The selling price for cobalt metal (98% Co) in the form of rondelles and shot has been quite steady at $1.50 per lb. In 1929 cobalt metal sold at $2.50 per lb. Black cobalt oxide (70 to 71% Co) has ranged from $2.10 (1929) to $1.10 (1932) to $1.84 (1940), with gray oxide (75% Co) about 10¢ higher. Cobalt in the form of organic salts sells at: resinate, 3 1/2% Co, 17 1/2¢; lineoleate, 8.5% Co, 33¢; and sulphate, 20% Co, 65¢ per lb.

Treatment. Standard metallurgical treatment for arsenical cobalt ores of Canada was to roast to remove arsenic, then smelt the roasted product in a blast furnace to produce high-silver cobalt-nickel-iron speiss, and additionally metallic silver buttons, from high-grade ores. Roasted speiss was dissolved in acid and the various metals precipitated separately, leaving cobalt oxides, which were later reduced to metal.

The copper-cobalt sulphide ores of Northern Rhodesia and Belgian Congo are concentrated and smelted, producing a high cobalt-copper-iron converter slag. The slag is reduced in electric furnaces, giving a metal alloy, containing about 40% Co, 40% Cu, and 20% iron and a slag free from cobalt and copper. The alloy is treated with acid, the copper and iron removed, and the cobalt finally precipitated.

The arsenical cobalt ores of French Morocco are subjected to the standard treatment for arsenical ores, and the gold contained is recovered from the acid-treated residues.

Cobalt Products Co., Fig. 9 (C. W. Drury, *PC*).

Location: Cobalt, Ontario.

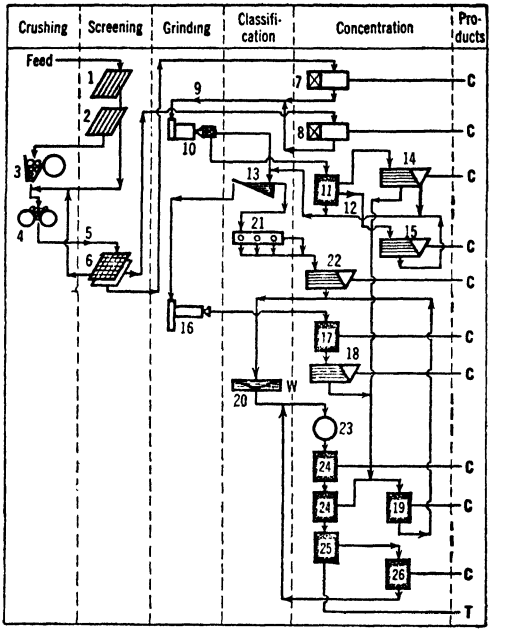

Legend for Fig. 9:

1. Sledging grizzly, 8-in. aperture, over ore bin.
2. Grizzly, 1-in. aperture.
3. Jaw crusher.
4. Rolls, 24×14-in.
5. Bucket elevator.
6. 2-deck screen, 1/2-in. and 8-m. aperture.
7. Jigs.
8. Pulsator jig.
9. Bin.
10. 3×6-ft. Hardinge mill with trunnion screen.
11. Denver unit cell.
12. Spigot product.
13. Rake classifier.
14, 15. Shaking tables.
16. Ball mill.
17. Rougher flotation.
18. Shaking table.
19. Cleaner cell.
20. Thickener.
21. Hydraulic classifier.
22. Separate shaking tables for products.
23. Conditioner.
24. Southwestern matless cell.
25. K. and K. flotation machine.
26. Deep air cell.

FIG. 9 COBALT PRODUCTS CO.

13. COLUMBIUM

Uses. There is no extensive use for the pure metal; it has been patented as a "getter" in radio-tube manufacture; it is chiefly employed, in the form of ferrocolumbium (55 to 60% Cb), as an addition to chrome and chrome-nickel steels, in which columbium restrains the loss of corrosion resistance, due to intergranular precipitation of carbides, upon continuous exposure to high temperature. For full effect, about 10 times as much Cb as C should be present (*113 A 126, 143*). The presence (usually unavoidable) of tantalum in a ferrocolumbium employed for this purpose is not essentially objectionable, but since tantalum is only about one-fourth as effective as the same weight of columbium (Ta should be 30 to 40 times C) and is about 5 times more valuable, producers of the ferro-alloy naturally prefer high-Cb, low-Ta concentrates.

Ores. Columbium and tantalum (Art. 41) almost always occur together, varying proportions of their oxides combining, as acids, with such bases as Ca, the rare earths, U, Mn, and Fe. The minerals most nearly free from tantalum are samarskite, wöhlerite, pyrochlore, euxenite, fergusonite, and columbites from Greenland and Nigeria; in other columbo-tantalum minerals, tantalum usually predominates. Ti, Zr, Ge, Sn, and W are frequent impurities. The columbite-tantalite group—(Fe, Mn) $(Cb, Ta)_2O_6$—is the commercial source of both metals; these minerals form a continuous and isomorphous series from columbite (theoretically 21% FeO + MnO; 79% Cb_2O_5; sp. gr., 5.36) to tantalite

(13.9% FeO + MnO; 86.1% Ta_2O_5; sp. gr., 7.03). Certain species of the group possess magnetic susceptibility. These minerals are normally associated with granites and pegmatites. For the electric-furnace production of ferrocolumbium, a columbite should contain at least 60% Cb_2O_5, and not more than the following percentages of other oxides: Ta_2O_5, 10; TiO_2, 5; FeO, 15; SiO_2, 5; MnO, 5; SnO_2, 0.20.

Production. World's supply of low-Ta columbite now comes from Nigeria, where it is recovered concurrently with alluvial tin; a considerable part of the output has been extracted from the waste dumps of earlier tin operations. Nigerian output, in long tons: 1937, 707; 1938, 530; 1939, 431. A tin producer at Manono, Katanga, Belgian Congo, follows a similar procedure, and reported 105 tons of Cb-Ta ore shipped in the year ending June 30, 1939. Imports of columbium ore by United States, in short tons: 1937, 461.3; 1938, 322.5; 1939, 54.5; average value, $685 per short ton.

Prices of ore are subject to negotiation. In 1939, ferrocolumbium (50 to 55% Cb) sold for $2.25 to $2.35 per lb.

Treatment. Ordinary processes as applied to alluvial tin ore (Art. 44). Columbite from lode mining could be treated by the same method as is applied to tantalite, at Tinton, S. Dak. At Kailo, Belgian Congo, mixed tantalo-columbites (sp. gr. 5.5 ~ 7) are separated from a cassiterite gravity concentrate by lifting out first the garnet and then the Ta-Cb minerals with high-intensity magnets. (*PC*, N. A. de Kun.)

14. COPPER

Uses of copper are multitudinous. It is, under most circumstances, the most economical conductor of electricity and hence is used widely for electrical machinery and transmission; its resistance to corrosion by air, water, and weak acids makes it valuable for certain parts of structures such as roofing, gutters, window screens, ship bottoms, for cooking utensils, and for pipes and containers in chemical and manufacturing plants. It is the main constituent of many alloys, notably brass and bronze which, like copper, can be drawn, and, unlike copper, can be successfully cast and, being harder than copper, can be worked in a lathe. Copper chemicals such as the sulphate, carbonate, cyanide, etc., find wide use in the arts, and as germicides and fungicides.

Ores. The economic minerals are atacamite, azurite, bornite, bournonite, brochantite, chalcanthite, chalcocite, chalcopyrite, chrysocolla, native copper, covellite, enargite, cuprite, malachite, melaconite (tenorite), and tetrahedrite. Copper is found in practically every type of ore deposit and associated, in one place or another, with practically every metallic and rock-forming mineral. The largest and best-known deposits are the sulphide-vein deposits of Montana, the native-copper deposits of the Lake Superior region, the "oxidized" and "porphyry" deposits of the southwestern United States, and the oxide and sulphide deposits of Belgian Congo and Northern Rhodesia. At Butte, Mont., the ore-bearing veins occur in granite, the chief copper minerals are chalcocite, enargite, bornite, and chalcopyrite, and the principal associated vein minerals are quartz and pyrite; minor minerals are covellite, tetrahedrite, tennantite, sphalerite, argentite, gold, and minerals containing bismuth, tellurium, selenium, nickel, and manganese. In the Lake Superior region the native copper, associated with native silver, occurs as part of the cementing matter in a conglomerate, as a cavity filling in lava beds, and in veins cutting both igneous and sedimentary rocks. The usual gangue minerals are calcite and zeolites. The "oxidized" deposits of the southwest carry large amounts of the oxidized copper minerals, malachite, azurite, and cuprite, and directly below or closely associated with these, bonanzas of massive secondary chalcocite. Both classes of minerals are derived from the primary copper sulphides, largely chalcopyrite and cupriferous pyrite, which are found unaltered in greater depths. The deposits occur in limestone or at limestone-porphyry contacts. There are also numerous granitic intrusions associated with the ore-bodies which have caused the formation of characteristic contact minerals. These deposits are characteristic of the Bisbee and Clifton districts. The deposits of the Jerome district differ markedly. Here bornite and chalcopyrite occur in fissures and as impregnations in slate country rock near intruded igneous dikes. The "porphyry coppers" are mineralized zones in granitic porphyries and schists. The principal copper mineral is chalcocite, which occurs as grains and veinlets in the country rock. Pyrite, chalcopyrite, and magnetite are the principal metallic associates; quartz and the rock-forming silicates form the nonmetallic gangue. An enormous disseminated deposit containing soluble sulphates of copper occurs at Chuquicamata, Chile. Enormous deposits of high-grade oxidized and sulphide copper occur on both sides of the border between Belgian Congo and Northern Rhodesia in the Katanga district; the oxidized deposits are surface residuals; the sulphides are finely disseminated in more or less metamorphosed and silicified sedimentary rocks, shale, quartzite, and dolomite, the principal copper mineral near the top of the sulphide zone being chalcocite, changing gradually to chalcopyrite and bornite with depth.

Production statistics are shown in Tables 10 and 11.

Table 10. Smelter production of copper in the United States (millions of pounds) (*USBM*)

	1913 *b*	1918	1919	1921	1929	1933	1936	1937	1938
Arizona	399.8	787.3	531.8	155.2	829.2	122.7	414.1	580.5	420.4
Utah	146.7	236.0	123.1	45.8	326.0	65.6	261.2	404.2	229.9
Montana	285.3	323.4	153.9	49.5	299.9	94.3	215.4	280.7	156.2
Nevada	84.7	115.8	63.2	15.1	139.0	42.5	146.2	150.0	93.7
Michigan	159.4	236.2	163.0	100.9	185.3	72.3	91.1	84.8	75.3
New Mexico	47.0	92.8	54.8	18.1	100.2	24.9	7.0	63.6	43.9
Alaska	24.5	64.3	53.6	76.8	39.9	1.6	30.4	42.2	33.5
Colorado	7.7	5.9	13.3	6.6	10.5	8.9	19.2	21.8	30.6
Washington	*c*	*c*	*c*	*c*	*c*	*c*	0.2	0.1	12.5
California	32.4	43.6	21.7	15.9	33.1	0.6	10.3	10.6	1.7
Idaho	8.4	5.1	2.7	2.0	6.3	2.2	2.9	4.8	5.6
Others *a*	28.9	27.8	28.5	19.6	33.6	14.3	24.8	.....	.....
Total	1,225.7	1,937.9	1,209.6	505.6	2,002.9	450.0	1,222.8	.....	.....

a Alabama, Wyoming and others. *b* Eng. and Mng. Jl. *c* Included in Others.

Table 11. World production of copper (thousands of metric tons) (*ABMS*)

	1913 *c*	1918	1919	1921	1929	1932	1936	1937	1938
United States	557.4	865.7	583.5	229.3	931.1	231.8	557.9	757.4	502.1
Chile	40.2	85.8	63.9	55.7	316.8	103.2	256.2	412.9	351.4
Africa	25.4	31.1	31.4	38.6	156.5	140.8	246.9	377.6	358.7
Canada	34.6	52.7	36.1	20.5	109.9	113.7	191.3	238.1	263.3
U.S.S.R.	*b* 43.0	*e* 5.0	.....	.....	25.8	30.7	83.0	92.5	98.0
Japan	73.2	95.8	81.9	54.1	75.5	71.9	*e* 73.8	*e* 75.9	*e* 77.0
Other Asia	0.5	.....	.....	.....	8.0	9.5	29.8	42.9	53.7
Mexico	52.8	75.5	60.5	12.3	78.7	34.1	32.6	46.8	41.4
Yugoslavia	.....	.....	.....	.....	20.7	30.2	39.1	39.4	42.0
Peru	25.7	44.8	39.2	33.8	54.4	21.4	33.4	35.7	36.3
Spain and Portugal	54.7	*e* 41.0	35.0	33.2	48.6	29.6	28.2	31.3	34.4
Germany	25.3	15.1	15.8	19.0	29.1	30.9	31.0	32.8	31.8
Australasia	47.3	33.8	16.4	18.9	14.5	15.0	18.4	20.0	19.9
Norway	11.8	2.9	1.8	1.3	14.8	15.3	20.2	20.2	19.7
Cuba	3.5	12.3	10.0	7.8	14.3	5.9	11.6	12.5	13.4
Finland	.....	.....	.....	.....	4.5	6.4	10.5	12.5	13.1
Sweden	6.9	3.0	3.6	1.1	3.2	3.7	7.6	7.0	8.0
Newfoundland	.....	.....	.....	.....	.....	.....	0.1	6.5	5.4
Bolivia	3.7	*e* 4.0	7.0	9.7	7.0	2.7	1.8	3.7	2.9
Austria-Hungary	4.1	.....	0.6	4.2	3.9	1.5	1.8	2.1	*e* 2.1
Others *a*	2.0	12.3	7.5	9.1	4.4	*e* 7.7	2.9	3.8	7.1
Total	1,002.3	1,380.9	994.3	548.7	1,921.6	905.5	1,677.0	2,271.6	1,981.6

a Includes Italy, Serbia, United Kingdom, Venezuela, and others. *c* *Mineral Industry*.
b Russia. *e* Estimated.

Selling. See Art. 50. Average prices, electrolytic copper, ¢ per lb.: 1929, 18.35; 1932, 5.79; 1936, 9.71; 1937, 13.39; 1938, 10.22.

Treatment of copper ore depends upon the nature of the ore itself. There are three general methods, *viz.*, (1) direct smelting for high-grade ores, containing upward of 6% copper; (2) leaching followed by electrolytic precipitation or precipitation by iron, for oxidized ores; (3) concentration followed by smelting of concentrate, for low-grade sulphide and native-metal ores. Concentrate is smelted in reverberatory furnaces, with or without prior roasting, forming a mixture of copper and iron sulphides (MATTE), which is drawn off molten and sent to a converter; here it is blown with air, which first oxidizes the iron, causing it to slag off as a silicate, and thereafter oxidizes the copper sulphide to crude metallic copper; this is then refined electrolytically. For details of treatment see *Metallurgy of Copper*, Newton and Wilson, John Wiley & Sons (1942); *Copper Metallurgy*, by various authors, Vol. 106, A.I.M.M.E. (1933); *Bray; Hayward; Liddell.*

Copper-Ore Concentrators

All copper ores except those containing the metal in sulphate or silicate form are amenable to concentration by methods presently known. The native-copper ores respond read-

ily to water-gravity concentration in the gravel and sand sizes and to flotation of slimes; sulphides are almost invariably treated by flotation; the oxides and carbonates can be floated or oil-air tabled in the sand sizes without much difficulty, but the slimes tend to be refractory. The sulphates and silicates and the slime oxides and carbonates respond best to leaching. Reduction of the oxidized mineral to metallic copper, either by a reducing roast or by solution in water and subsequent precipitation, followed by flotation, is readily done in the laboratory and has been done in a few mills (Fig. 39).

Flowsheets of copper concentrators are, on the whole, remarkably similar, when the wide variety of ores, of smelter and freight schedules, and of available treatment methods are considered. Thus copper ores may contain native copper, or either of the three sulphides, chalcocite, bornite or chalcopyrite, as the principal value-bearing constituent; in which case a given weight of copper-bearing mineral will carry respectively 100, 80, 56, or 35 parts of copper per 100 parts of pure concentrate, with corresponding limitation on the highest possible grade of concentrate that can be made. Workable ores normally range from 0.8% copper upward, although few run higher than 6 to 7% and the new MORENCI plans to send 0.5% ore to the mill. More or less oxidized copper mineral, cuprite, tenorite, malachite, azurite, brochantite and chrysocolla, usually accompanies the sulphides. Gangues range from pure quartz to substantially pure massive iron sulphides. Gold in more or less important quantities is a relatively common metallic associate. The valuable minerals occur in all sizes of grain from submicroscopic to masses of many pounds. Each of these variable conditions would, considered from a purely technological standpoint, determine a more or less unique treatment for a given ore, and act as a natural limitation to the result attainable. Additionally, some mills are adjacent to smelters while others must ship concentrate several hundred miles; each smelter offers a different schedule of net payments made up of a complex of varied charges and allowances. As a consequence, a set of entirely extraneous economic limitations is imposed on concentration technology. Yet despite the multitude of combinations of controlling conditions thus made possible, copper concentrators may not only be correctly described generally as comprising crushing, grinding, and flotation, but, more specifically, as employing 2- or 3-stage crushing, 1- or 2-stage grinding, and a rougher-scavenger float with 1- or 2-step cleaning. Few plants fall outside this specific description. The exceptions are those treating ores containing native metal, copper or gold, which plants usually include more or less gravity concentration, to remove the coarser metal particles; the plants treating ores in which intergrown sulphides of copper and iron occur in relatively coarse grains, wherein slightly greater complexity is found in the flotation treatment, and an extra, later grinding stage may be added; and the plants in which gold occurs in both copper and iron sulphides, in which case separate flotation sections may be employed to make separate concentrates.

Crushing is predominantly 3-stage, comprising almost universally a jaw or gyratory as the primary machine, a standard cone as the secondary, and the third stage rolls or short-head cones in substantially equal numbers of cases, with a few mills using rod mills. Scalping by grizzly ahead of the primary crusher and by vibrating screen ahead of the secondary is usual (substantially universal with wet ores); the final stage is closed or open circuit depending on the size of grinding-mill feed and whether the grinding circuit has ample capacity; closure is normally by a vibrating screen which precedes the final crusher and scalps its feed. With soft ores and relatively coarse dissemination of sulphides, 2-stage crushing is practiced when the run-of-mine is not too coarse. At RAY the open-stage rod mill is, in effect, a third crushing stage; at MOUNTAIN CITY and MAGMA the sulphides are coarse-grained and present in considerable bulk, rendering the feed relatively friable, and low-grade concentrate is acceptable. Power consumption for crushing averages about 3.5 hp-hr. per ton. Cost of crushing from run-of-mine to 1/4-in. averages from 6 to 8¢ per ton, and to 10-m. from 9 to 12¢.

Grinding. Primary grinding is 2-stage at 8 out of 15 mills, 1-stage at 6 and 3-stage at one; present trend is toward one stage. Of the multistage circuits, the first stage is open in 5 mills; the final stage is closed in all. In general, closed-circuit multistage grinding corresponds to the harder ores and finer disseminations, but MIAMI is an exception on both counts. Arrangement of mills and classifiers is highly variable; no generalizations are justified. The *mog* of the primary grind ranges from 48 to 65, with most of the work near the finer end. Sizing-assay tests and microscopic examination of tailings show that most sulphide-copper losses are in the very fine sizes and that much of this is free copper mineral (Sec. 12, Art. 35). Whatever the reason for this loss, one remedy lies in so arranging the grinding circuit that overgrind of sulphides is minimized. Clean classification of sands, high circulating loads in the grinding circuit, a primary desliming classifier with high-density overflow, the use of gravity concentration in the grinding circuit, and the addition of small amounts of collector and frother to the grinding circuit are all expedients directed to this end.

Power consumption averages from 11 to 12 hp-hr. per ton.

Cost of grinding and classification from 1/4-in. to 48 or 65 *mog* ranges from about 8 to 30¢ per ton and averages between 15 and 18¢.

Flotation. Roughing is predominantly rougher-scavenger flow, with middling recirculated to the rougher, in several cases through the final primary-grinding unit. Cleaning practice varies somewhat. With simple ores sufficiently coarsely disseminated to permit copper-iron severance in the primary grind, or when copper-iron separation is unnecessary, one cleaning is the rule. When bulk floats are

made in the rougher, two cleanings are usual, one of which may precede iron depression, in which case the tailing of the final cleaner is an iron concentrate. If bulk float is reground before separation, primary cleaning is normally multistage, and regrinding may either precede or follow the first stage of such cleaning. Counterflow of cleaner middling is normally one-stage. Ethyl xanthate is the usual collector, pine oil the usual frother, lime the principal depressant for iron, with cyanide used when chalcocite is an important copper mineral. Power consumption averages 4 to 5 hp-hr. per ton. Cost ranges from 5 to 25¢ per ton and averages between 10 and 12¢.

Concentrate handling is almost universally thickening followed by filtration of thickened product on drum or disk filters. Cake moistures range from 6 to 10%. Cost per ton of original feed varies, of course, with ratio of concentration, and ranges about 1/2¢ to 6¢ per ton.

Tailing disposal ranges in elaborateness from simple gravity discharge through a short launder as at BRITANNIA to elaborate thickening, pumping, and dam building as at MIAMI. Costs range from substantially nothing to 8 or 10¢ per ton.

Recoveries range from 85 to 90% of the sulphide copper with the low-grade ores when iron is depressed, and from 90 to 97% for the higher-grade feeds, reaching the higher figures when iron is acceptable in concentrate. Sulphide tailing on low-grade feeds ranges from 0.05 to 0.1%; it will run to 0.2 to 0.3% with high-grade feed.

Grade of concentrate ranges from 35 to 50% Cu when chalcocite is the principal copper mineral and iron elimination is desirable; corresponding grades for chalcopyrite are 25 to 30%. When iron is not eliminated, either because of its salability or because of gold content, grades run down to 10 to 15% Cu (MAGMA, MT. MORGAN).

Power consumption ranges from 13.5 hp-hr. per ton at RAY and 13.9 at ANDES, with relatively soft ores and large daily tonnages, to the high twenties at MOUNTAIN CITY and MAGMA, with low tonnages, and at MT. MORGAN and MT. LYELL, where gold recovery requires more persistent chasing of values. The two native-copper mills reported, using both gravity concentration and flotation, consume upward of 30 hp-hr. per ton.

Water consumption in the sulphide mills is 2.5 to 4 tons per ton of ore without water recovery; it can be held down easily to about 1.25 tons with a moderate recovery installation.

Labor duty varies widely, ranging from about 20 to 100 tons per man-shift operating. The lower figures are for the smaller mills, while the higher figures represent about the best that can be done today (1942) when treating large tonnages with well-trained labor. Average duty is about 35 tons.

Costs average (1935–1940) about 50¢ per ton milled, dropping to 30¢ at United States mills treating large daily tonnages of simple ores and rising to $1 to $1.50 at smaller mills with difficult ores. Average for 15 mills in United States in 1930's (some at reduced tonnages) was 60¢ per ton, of which labor constituted about 30% and power 25%.

15. NATIVE-COPPER MILLS

Native copper ores are milled in the Michigan peninsula and at a few localities in Bolivia, notably Coro Coro. The ores present problems unique in concentration practice on account of the size and toughness of the metallic particles. Special crushing equipment must be employed, and, although metallic copper is readily floatable, the coarse copper must be removed as it is freed. Hence hand picking, coarse and fine jigging, and tabling are employed, with grinding and flotation in the scavenging role. Recoveries are about the same as those at sulphide-copper mills treating ore of the same grade; costs are somewhat higher.

Copper Range Co. Fig. 10 (*Q* by A. L. Engels, Sup't).

Location: Freda, Mich.

Ore: Amygdaloid containing native copper in relatively coarse aggregation together with native silver; also some cuprite, malachite, azurite, and chrysocolla; gangue minerals principally quartz, calcite, and epidote.

Capacity: 1,320 tons per 24 hr.

Assays: Feed, 2.73% Cu; concentrate, 61.7%; tailing, 0.066%.

Recovery: 96.5%.

Ratio of concentration: 23.4 : 1.

Labor: American and foreign. Tons per man per 24 hr.: Operating, 35; repairs, 265.

Running time, principal causes of loss: Replacement of wear plates.

Water: Pumped 1,600 ft. from Lake Superior; 125 hp. installed. Consumption, 7 tons per ton of ore milled. None reused.

Building: Steel and concrete. Concrete floors slope 1/4 to 5/8 in. per ft. in wet parts. Sloping site. Heated.

Machinery handling. Manual crane, chain blocks on mono-rails. Air hoist.

Power: Purchased. Comes 45 mi. at 66,000 volts and 15 mi. at 28,500 volts. Motors 2,200-, 440-, and 220-volt, 60-cycle. Consumption, 34.2 hp-hr. per ton of ore milled.

Transport: Railroad at property. Ore comes 14 mi.; concentrate shipped 19 mi., both by rail.

Tailing by gravity through launders to Lake Superior.

Summary. Crushing from 6-in. grizzly undersize to $<7/32$-in. ball-mill feed in 3 stages, comprising two special impact mills in series in closed circuit with an $11/16$-in. screen, followed by a short-head cone in closed circuit with a $7/32$-in. screen. A bleed-off of native

copper is provided for in the cone circuit. One-stage primary grinding to 28 *mog* in a simple ball mill-classifier circuit. Concentration starts with the above-mentioned scalping operation on $^{11}/_{16}$~$^{7}/_{32}$-in. material in jigs; all $<^{7}/_{32}$-in. sands are scalped on tables. The flotation circuit comprises 4 successive stages with slime-tailing discard and sand-tailing regrind between stages 2 and 3; each pair of stages is rougher-scavenger routing with finished concentrate from the rougher and one-stage counterflow of middling.

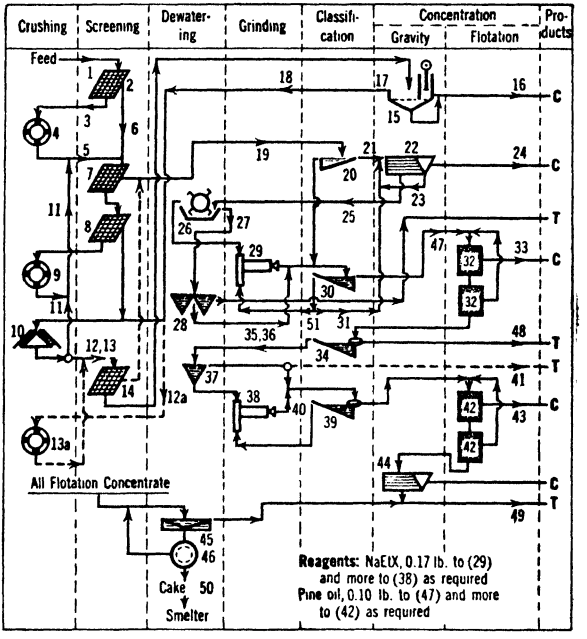

Legend for Fig. 10:

1. In order: 3,000-ton run-of-mine bin; traveling feeder; belt conveyor. Rock size: max. thickness, 6 in., length up to 24 in.

2. 1 @ 4×8-ft. Link-Belt vibrating screen, 1-in. aperture.

3. 54-in. apron picking conveyor, 40 f.p.m. Two men per shift pick mass copper, steel, and wood. About 6% of copper content of rock removed at 2×4-in. up to 18-in. masses.

4. 2 cage-type impact crushers.

5. 30-in. inclined belt conveyor.

6. 20-in. belt conveyor.

7. 2 @ 5×10-ft. Link-Belt vibrating screens, $^{7}/_{32}$-in. aperture.

8. 1 @ 4×10-ft. Link-Belt vibrating screen, $^{11}/_{16}$-in. aperture.

9. 1 cage-type impact crusher.

10. 1 @ 5 1/2-ft. short-head cone crusher, set 1/4-in.

11. 20-in. inclined belt conveyor.

12. Alternatively up to 25% of feed is bled off here to jigs (15) to prevent circuit from building up with copper.

12*a*. Alternatively.

13. 20-in. inclined belt conveyor.

13*a*. 1 cage-type impact crusher.

14. 1 @ 4×10-ft. Link-Belt vibrating screen, $^{7}/_{32}$-in. aperture.

15. 4 @ 24×48-in. Woodbury jigs.

16. Cup and hutch combined, 90 to 92% metal.

17. Overflow, 1% metal.

18. 20-in. inclined belt conveyor.

19. Alternative flows here are: (*a*) via 20-in. inclined belt conveyor to a 48 (diam.)×42-ft. 5,000-ton steel storage bin, thence by 2 @ 20-in. inclined belt conveyors in series to a 30-in. distributing conveyor to 4 @ 90-ton circular surge bins, each feeding one grinding-concentration unit; or (*b*) directly to the second of the 2 @ 20-in. inclined belt conveyors above mentioned, thus by-passing storage. Rotary feeders from the 90-ton bins.

20. 1 @ 3×18 1/2-ft. simplex rake classifier (Sec. 8, Table 6) for each section.

21. Distributor; assay of feed, 3 to 5% metal.

22. 6 Wilfley tables for each section.

23. 2 1/2-in. pump for 6 tables; assay of middling 2.5 to 3.5% metal.

24. 60 to 63% metal.

25. 0.4 to 0.7% metal.

26. Dewatering wheel.

27. Overflow.

28. W-settling tank.

29. 1 @ 8-ft.×54-in. semiconical ball mill (Sec. 5, Table 30) for each section.

30. 1 @ 8×26 2/3-ft. duplex rake classifier.

31. 9-in. "bleed."

32. 1 @ 12-cell No. 24 Fahrenwald flotation machine.

33. From first 2 or 3 cells; 45 to 50% metal.

34. 6(diam.)×3×26 2/3-ft. bowl-rake classifier for each section.

35. By 2 1/2-in. pump in each section.

36. Sand stream from 4 sections.

37. Settling cone.

38. 1 @ 8×3 1/2-ft. semiconical ball mill (Sec. 5, Table 30) for four sections.

39. 1 @ 12(diam.)×6×30-ft. bowl-rake classifier.

40. 5-in. pump.

41. A variable part.

42. 1 @ 8-cell No. 18 Fahrenwald flotation machine.

43. From first 2 cells; 45 to 50% metal.

44. Pilot table (Wilfley).

45. 1 @ 30×10-ft. thickener.

46. 1 @ 6(diam.)×4-ft. Dorreo filter.

47. 2 @ 3-in. pumps.

48. 0.1% metal.

49. 0.05% metal.

50. 8 to 10% moisture.

51. Split stream.

FIG. 10. COPPER RANGE CO., Freda mill.

Calumet & Hecla Mining Co. Conglomerate mill. Fig. 11 (*Q* by C. H. Benedict, Metallurgist; *IC 6364*).

Location: Torch Lake, Mich.

Ore: Native copper with a little native silver in an extremely hard rhyolitic conglomerate. Gangue minerals are quartz, feldspar, calcite, epidote, barite, and chlorite. The rock is tough, hard, and highly abrasive.

Capacity: 3,850 tons per 24 hr.

Assays, %Cu: Feed (original mine ore), 3.0; concentrate, 60 to 62.

Recovery: 95%.

Ratio of concentration: 20 : 1.

Percentage possible running time: 98, approx.

Labor: American; 19.5 tons per man-shift, total.

Power: Boiler steam for stamps. Stamp exhaust to turbines generating electrical power for other mill units. Motors 440- and 2,300-volt, 25-cycle. Consumption, 30 to 36 hp-hr. per ton milled.

Water: 28 tons per ton milled (not including leaching and flotation). No reclamation.

Tailing: Elevated by centrifugal pump to launder emptying into Torch Lake.

Building: Steel frame, wood sheathing, painted corrugated-iron cover. Level millsite. Heated by exhaust steam.

Distances: Mines to mill, 5 mi., max.; mill to smelter, 0.5 mi.; water at mill; power transmitted 0.5 mi. at 13,500 volts.

Costs: See flowsheet notes (35), (36), and (48) and Table 12.

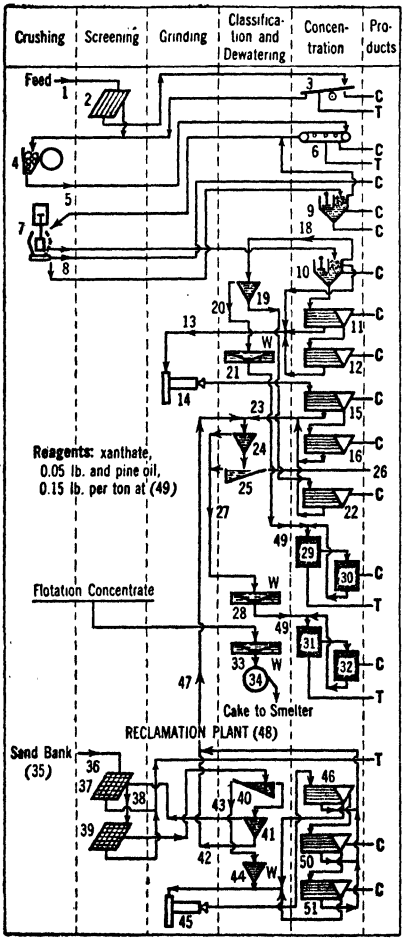

Legend for Fig. 11:

1. By 7-ton skips in shaft.

2. Grizzly, 4-in. spaces.

3. Tilting pan, 9 ft. wide at upper end and 4 ft. wide at lower; bottom 3/4-in. plate, sides 1/2-in., all lined with 3/8-in. sheet; set at low slope to receive grizzly oversize from a skip load and hold it for picking, then tilted to dump; 2 men per shift, one picking and one on tilting winch.

4. 1 @ 24×48-in. jaw crusher, set 3-in.

5. Bin; railroad cars; bin, 400-ton live capacity, one for each stamp.

6. Picking table.

7. Steam stamp, 3/16-in. screen; 11 of these, each with a mortar jig (Sec. 4, Art. 10). Capacity on conglomerate 335 to 350 tons each per 24 hr. 3 tons water per ton of ore. Air hoist for handling shoes, etc.

8. Mortar-jig discharges. Each mortar has 4 with 4×12-in. sieve compartments, 1-in. screens, 190 to 200 @ 2-in. s.p.m.

9. Bull jig.

10. 2 @ 5-sieve Woodbury jigs (see Sec. 11, Table 20); first sieve 36×48-in., others 30×48-in. Tailing, 140 tons per 24 hr.

11. 2 Wilfley tables.

12. 1 Wilfley table.

13. 50-ft. sand wheel; for 17 units. 2,640 tons per 24 hr.

14. 24 @ 8×72-in. conical pebble mills.

15. 128 Wilfley tables.

16. 8 Wilfley tables.

17. 50-ft. sand wheel.

18. Slime, 160 tons per 24 hr. 1 @ 4-in. slime pump.

19. 2-spigot hydraulic classifier.

20. 110 tons per 24 hr.

21. 1 @ 25-ft. 3-tray thickener. Clear overflow.

22. 1 to 8 Wilfley tables.

23. 50-ft. sand wheel.

24. 16 settling tanks.

25. 8 quadruplex rake classifiers.

26. Leaching plant.

27. 10-in. pump.

28. 12 @ 40-ft. 3-tray thickeners. Overflow clear.

29. Cells 3 to 16 of 4 @ 16-cell 24-in. standard M-S flotation machines; 226 r.p.m. Cells 3 and 4 for preagitation only. Feed: 25% solids; *p*H 7.0 to 7.5. Time-factor, 16 min. Conc., 15% Cu. See Table 12.

FIG. 11. CALUMET & HECLA MINING CO.

Legend for Fig. 11—Continued:

30. Cells 1 and 2 of (29); 20-min. treatment time. Conc., 30% Cu; tailing, 1% Cu.

31. Cells 3 to 16 of 4 @ 16-cell 24-in. standard M-S flotation machines. Cells 3 and 4 for preagitation only. Feed, 25% solids. See Table 12.

32. Cells 1 and 2 of (31).

33. Thickener. Overflow clear.

34. Oliver filter.

35. Old mill tailing, 0.5 to 1.0% Cu. Total cost 1937 per ton of sand treated, including mine and mill administration, was:

General administration and miscellaneous	$0.021
Dredge (note 36)	0.067
Shore plant (notes 37, 38)	0.018
Regrinding plant (notes 39 to 46 and 50, 51)	0.198
Leaching	0.133
Flotation	0.020
Total	$0.437

Tons treated, 1,697,000. Assays, % Cu: feed, 0.560; tailing, 0.097. Recovery, 82.5%

36. Suction-type, 10,000-ton daily capacity. Can dredge to 113 ft. below water level. 20-in. pump with 1,250-hp. motor discharges through 3,000 ft. of 20-in. pipe on pontoons to receiving pool on shore. COST (1937) for dredge operation with discharge through average length of 3,000 ft. was $0.067 per ton of solid dredged. Distribution was: labor, 26%; power, 32%; pump and pipeline renewals, 32%; other supplies, 10%.

37. Stationary screen on shore, 16×20-ft., 1-in. round holes.

38. Pool, capacity, 20,000 tons sand; 12-in. sand pump, swinging suction of constant length giving uniform feed to plant. Casing is split horizontally and lined throughout. Impeller, 40-in. diam., direct-connected to 200-hp. motor. Receiving box; overflow back to pool.

39. 4 stationary screens, 3/8-in. aperture.

40. 2 double-drag classifiers, each with 2 @ 20-in. belts carrying 6×4×24-in. angles.

41. Settling tanks.

42. 8-in. pump.

43. 22-in.×275-ft. belt conveyor; slope, 2 1/2 in. per ft.; speed, 500 f.p.m. Receiving bin, about 30 min. storage capacity, discharged through gates by means of water jets.

44. Dewatering boxes, clear overflow.

45. 64 @ 8-ft.×18-in. conical pebble mills; total capacity about 3,000 tons per 24 hr. 40-hp. motor on each mill with a flexible coupling and herringbone gears. Mills are served by a 15-ton crane that can pick up a full mill; time to change, about 1 hr.

46. 160 Wilfley tables.

47. 16-in. pump.

48. Cost (1937) from pool to regrinding plant was $0.018 per ton of sand, of which cost 58% was labor, 24% power, and 18% supplies. Cost per ton in regrinding plant in 1937 was:

General expense		$0.0158
Sand conveying and distribution		0.0176
Grinding:		
Labor	$0.0133	
Power	0.0859	
Pebbles and lining	0.0641	
Other supplies	0.0010	
		0.1643
Table treatment		0.0338
Total		$0.2315

Metallurgical results (1937): tons treated, 903,325. Assays, % Cu: Feed, 0.559; tailing, 0.365; concentrate, 40.57. Recovery, 35%. Cost per lb. of copper, excluding smelting and selling, $0.608.

49. 0.05 lb. per ton of sodium xanthate and 0.15 lb. pine oil fed on each stream.

50. 6 Wilfley tables.

51. 4 Wilfley tables.

Table 12. Performance of flotation machines in Calumet & Hecla reclamation plant

	Feed		Tailing, Cu, %	Recovery, %
	Weight, %	Cu, %		
>200-m.	4.0	0.280	0.243	13.2
<200-m.	96.0	0.520	0.097	81.3
Totals	100.0	0.510	0.103	80.

Averages and totals, 1937

Feed, % Cu	0.520
Tailing, % Cu	0.102
Concentrate, % Cu	42
Recovery, %	80

Costs, 1937, per ton of slime treated

General expense	$0.017
Slime conveying and distribution	0.025
Flotation	0.042
Royalty	0.010
Total	$0.094
Cost per pound of copper produced, excluding smelting and selling	$0.0115

Summary. No receiving bin. CRUSHING: Jaw crusher, 24- to 3-in.; steam stamp, 4- to 3/16-in.; pebble mills, 3/16-in. to 35-*mog*. CONCENTRATION: Hand-picking on sizes to <3-in.; jigging in stamp mortar and on natural product through 3/16-in. screen, with cleaning of jig-hutch product on shaking tables. Fine sands tabled without classification.

Gravity-concentration residues divided into sands and slimes, the former leached and the latter floated.

Compare with the COPPER RANGE flowsheet. The copper in conglomerate ores is more finely disseminated than that in amygdaloid ores. Leaching eliminates the necessity of regrinding all gravity-concentration tailing to flotation size and makes better extraction of coarse copper than flotation does.

16. MILLS FOR COPPER-SULPHIDE ORES

The methods of concentration applied to sulphide ores of copper depend on the associated metals, and upon smelter contracts and freight rates available, rather than upon limitations imposed by concentration technology. Flotation is the basic method in all cases, and can make a substantially clean copper-sulphide concentrate in the presence of any associated sulphide minerals but galena. But separation from iron is frequently not economically indicated, especially if the smelter is close to the mill, if much siliceous gold ore or concentrate is coming to the smelter, or if the pyrite as well as the copper mineral carries precious-metal values.

Flowsheets range in complexity from the simple 2-stage crushing, one-stage grinding, and essentially one-stage flotation at ANDES to the highly complicated step-grind and re-grind, three-sulphide differentiation at NORANDA. MAGMA is unique in retaining tabling in the ball-mill circuit despite substantial lack of precious metal, but the Magma smelter, at the mill, receives much low-iron siliceous gold ore, and the high-iron copper concentrate carries a premium with no freight charge to offset it. On the other hand, MATAHAMBRE, with a smelter 1,200 mi. distant, discards pyrite as completely as possible and makes a concentrate that is close to the theoretical copper content of chalcopyrite, which is the principal copper carrier. UTAH and RAY free pyrite in the original grind and depress it in the roughing operation. At MIAMI and BRITANNIA the sulphides free from gangue at relatively coarse sizes (48 *mog*), but finer grinding is required to effect separation of pyrite from copper sulphides; hence a bulk float is made at the coarse size and tailing is rejected, while rough concentrate is reground and selective separation of copper and iron made thereon. OUTOKUMPO first depresses and then floats free pyrite in the primary run, and depresses locked Cu-Fe sulphides in cleaning, returning them as middling through the grinding circuit to primary flotation. At NEW CORNELIA rough concentrate is reground before cleaning to drop gangue locked in middling grains therein; in general the practice of regrinding before cleaning is growing where high-grade concentrate is economically desirable. Primary slime is separately floated at MT. MORGAN and BRITANNIA; this practice is desirable wherever acidic clayey slimes are present in the ore, as tailing is thus improved with little additional cost in equipment or operation. The sand-slime separation should be made before grinding in order to reduce slime reactions as much as possible.

Andes Copper Mining Co. Fig. 12 (*Q* by O. M. Kuchs, Gen'l M'g'r).

Location: Portrerillos, Chile, S. A.

Ore: Chalcocite, chalcopyrite, tennantite, and pyrite in quartz-diorite porphyry.

Capacity: 16,000 to 17,000 tons per 24 hr.

Assays: See Table 13.

Recovery: Total Cu, 75.2%; sulphide Cu, 94.5.

Ratio of concentration: 29.1 : 1.

Labor: Chilean.

Water: From Ola River, 32 mi. gravity flow. CONSUMPTION: 3.76 tons per ton of ore milled. Re-use ranges from nil to all available. Analysis of mill water, parts per million: Ca, 127; Mg, 32; Na, 634; SiO_2, 250; FeO, 10; NO_3, 8; Cl, 1,015; SO_4, 253; HCO_3, 162.

Labor distribution

Operation	Tons per man shift	
	Operating	Repairs
Coarse crushing..	419	1,481
Fine crushing....	582	1,407
Concentration....	107	255
Total.....	102.5	246

Building: Steel frame, corrugated-iron enclosure, plate-steel and concrete floors sloping 3/4 in. per ft. in wet part of mill. Site averages 10-deg. slope. See Fig. 13. Unheated.

Machinery handling: Power cranes throughout. See Fig. 13.

Table 13. Average assays for 1937, Andes Copper Co.

Material	Per cent.				
	Copper		Fe	S	Insol.
	Total	Sulphide			
Feed.....	1.619	1.266	2.313	1.123	.....
Concentrate....	35.44	.....	16.53	27.14	15.33
Tailing.....	0.415	0.072	.....	0.219	.....

[General data continued on p. 37.]

Table 14. Power consumption at Andes Copper Co.

	Kw-hr. per ton ore milled
COARSE CRUSHING	
Feeders	0.012
Crushers	0.131
Conveyors (4, 5, 6, 8)	0.016
Crane	0.001
Magnets	0.038
Lighting	0.028
Total	0.226
FINE CRUSHING	
Conveyors (9, 10, 11, 12)	0.135
Feeders	0.052
Crushers	0.333
Cranes	0.003
Lighting	0.021
Total	0.544
CONCENTRATOR	
Conveyors (13, 14)	0.135
Ore feeders, incl. 18-in. feeder belts	0.040
Marcy mills	9.107
Classifiers	0.200
Flotation (excluding blower air)	0.883
Blowers	2.374
Concentrate thickeners and filters	0.140
Miscellaneous	0.030
Lighting	0.195
Total	13.104
CRUSHING AND CONCENTRATING—Total	13.874

Legend for Fig. 12:

1. Electric railroad, 6.2 mi.; 3 @ 4,200-ton bins, 40(diam.)×60-ft., flat bottom, steel, 2,200 tons ea. live capacity; 3 @ 54-in. apron feeders, 12.5 f.p.m., 500 tons max. per hr. ea.

2. 3 grizzlies, 3 1/2-in. spaces, Mn.

3. 3 @ No. 9-K Gates gyratories, 3 1/2-in. open setting, direct connected to motors by flexible coupling.

4, 5, 6. 3 conveyors (4), Table 15; 1 conveyor (5), Table 15; with magnets following each loading point, 45-in. diam., 250-volt, suspended on hand-operated crawls; 1 conveyor (6), Table 15, with traveling trippers; 1,590-ton rectangular steel bin (640-ton live capac.); 10 pulley feeders, 15 f.p.m., max. capacity 165 t.p.h.

7. 10 stationary screens, 1 1/2-in. rd. holes.

8. 10 @ 48-in. vertical-type Symons disk crushers, set 3/4 in., direct connected by flexible coupling. Product, 9% >3/4-in., 65 to 70 t.p.h. ea.

9, 10, 11, 12. 2 conveyors (9), Table 15, and 1 conveyor (10) delivering to 1 conveyor (11), thence to conveyor (12); traveling tripper; 8,350-ton steel catenary bin with 20 pulley-type feeders; 20 @ 18-in. conveyors.

Table 15. Belt conveyors at Andes Copper Co.

Reference No.	Width, in.	Length, ft.	Speed, f.p.m.	Idlers
4	30	40	340	Plain grease-tube
5	42	105	460	Roller-bearing
6	42	410	460	Roller-bearing
9	30	124	415	Plain grease-tube
10	30	45	415	Plain grease-tube
11	42	110	450	Roller-bearing
12	42	732	450	Roller-bearing *a*

a 10-ply belt, 36-oz. duck, 3/16-in. rubber on carrier face and 1/16-in. on back. Driven by 200-hp. 450-r.p.m. motor through 18.2 : 1 Mittal speed-reducer unit.

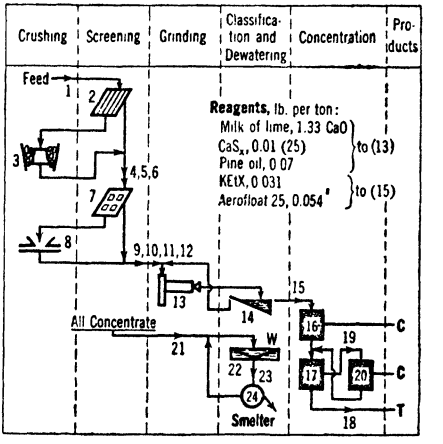

13. 20 @ 9×9-ft. Marcy ball mills.

14. 20 @ 11×20-ft. quadruplex rake classifiers.

15. Automatic feed samplers.

16. 20 @ 4×10-ft. shallow-type Callow cells, wood, 3 @ 3×3-ft. 3-ply woven blankets ea., life 35 da. Air: pressure, 2.6 lb. per sq. in.; consumption, 11.5 c.f.m. per sq. ft. blanket area; power, 3.2 hp-hr. per ton. Pulp: temperature, 45 to 62° F.; 18% solids, 0.065 lb. CaO per ton of water. Time factor, 4 min.

17. 40 @ 4×60-ft. shallow-type Callow cells, wood, 14 @ 4×4-ft. 3-ply woven blankets ea.

18. Section- and general-tailing samplers.

19. 10 @ 6(diam.)×8-ft. redwood tanks; 15 @ 6-in. Wilfley pumps (one spare at each tank).

20. 20 @ 4×10-ft. Callow cells, like (16).

21. 5 @ 6(diam.)×8-ft. redwood tanks; 10 @ 6-in. Wilfley pumps (one spare at each tank).

22. 4 @ 100-ft. thickeners, concrete tanks, center drive, 1/12 r.p.m., 7 1/2-hp. motor. Overflow to mill-water system.

23. 75% solids. 4 belt-bucket elevators.

24. 4 @ 14(diam.)×12-ft. Oliver filters. Cake 10 to 11% water. By two conveyors to roaster bins.

25. S equivalent.

FIG. 12. ANDES COPPER MINING CO.

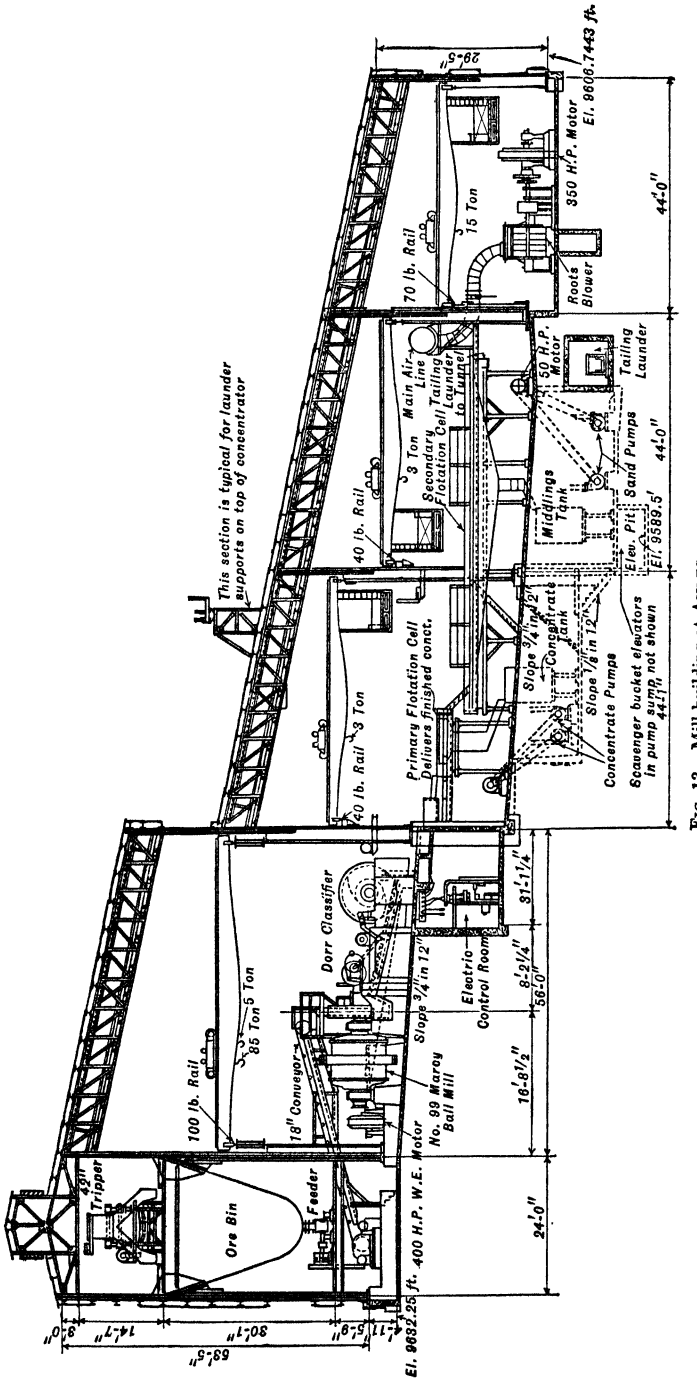

FIG. 13. Mill building at ANDES.

Power: Three sources: Steam-power station at Barquito, transmitted 79 mi. at 88,000 volts; hydroelectric station at Montandon, transmitted 9.6 mi. at 13,000 volts; waste-heat steam plant at smelter. Motors 50-hp. and up, 2,200-volt, 60-cycle; below 50-hp., 440-volt, 60-cycle. CONSUMPTION: See Table 14.

Transportation: Railroad trackage serves entire plant. Ore, 6.2 mi.; concentrate, 270 ft. by conveyor to roaster plant.

Tailing disposal: 7,500 ft. by launder to pond. Dam is built up in terraces by sand spigot product from dewatering cones carried on a bolted wooden trestle of standard sections. Trestle is dismantled and moved for each 16-ft. lift of dam crest. Cone overflow is deposited behind dam, the coarser delta deposit adding thereto. Water drains through a tunnel at far end of pond. When water reclamation is desirable, tailing on the way to the pond is passed through a 200-ft. thickener, traction-type, located alongside the tailing launder about 1,750 ft. from the concentrator.

Summary. Run-of-mine (<16-in.) to <1 1/2-in. ball-mill feed in two steps by three relatively small gyratories in parallel and 48 vertical disk crushers in parallel in open circuit; grinding to 48-*mog* (54% <200-m.) flotation feed in one stage; all-flotation concentration by a rougher-scavenger flow with one-stage cleaning of scavenger concentrate and counterflow of cleaner tailing to the scavenger cell.

This plant was built just prior to the appearance of the cone crusher, and represents a crushing-grinding flowsheet that was hotly supported by one school at that time. There can be no doubt but that present-day design would replace the disk crushers with a much smaller number of cones or similar crushers; many designers would interpose fine crushers to perform much of the size reduction from 1 1/2-in. to 1/8- or 3/8-in., with corresponding relief of the ball mills.

Recovery of sulphide copper is surprisingly high considering the coarse feed to flotation. This is due to the relatively high insoluble and iron contents permitted in the concentrate.

Minas de Matahambre, S. A. Fig. 14 (*Q* by D. D. Homer, Gen'l M'g'r; John M. Brooks, Jr., Ass't Gen'l M'g'r; H. D. Bemis, Concentrator Sup't; *IC 6544*).

Location: Matahambre, Piñar del Rio, Cuba.

Ore: Chalcopyrite and pyrite in shale and quartzite.

Capacity: 1,200 tons per 24 hr.

Assays: See Table 16.

Recovery: 95.8%.

Ratio of concentration: 6.3 : 1.

Labor: Cuban, foreign. Tons per man-shift, total, 18.

Running time: 81%. Principal loss due to holidays and social laws.

Water: Sources, river and mine. Pumped 500 ft. at consumption of 70 hp. About 10% re-used. Net consumption, 2 tons per ton of ore.

Building: Wood, with wood and concrete floors sloping 1/16 in. per ft. in wet part of mill. Unheated. Sloping site.

Machinery handling: Power crane and chain blocks in crushing and grinding sections; hand chain blocks in concentrator.

Power: Steam-turbine generators at Santa Lucia. Transmitted 5 mi. at 110,000 volts. Motors 110-, 440-, and 2,200-volt, 60-cycle. Consumption, 23.4 hp-hr. per ton milled.

Transportation: 25 mi. to nearest railroad, 9 mi. to seaport at Santa Lucia. Crushing plant at shaft; 800 ft. to mill bins by rope tram. 1,200 mi. to smelter.

Tailing: See flowsheet, note (19).

Costs: (1936) Crushing, $0.11 per ton; total, $0.48 per ton milled.

Table 16. Flotation machines at Matahambre *b*

Function	Tons solid per machine per hr.	Air		Power consumed, hp.	Time-factor, min.	Pulp			Assays, % Cu			
		Pressure, lb. per sq. in.	Consumption, cu. ft. free air per min. per machine			Solids, %	Temp., deg. F.	pH	Feed	Concentrate	Middling	Tailing
Rougher *a*..	16.7	1.6	1,600	23	10.7	23	85	7.5	4.95	21 to 22	.....	0.22
Cleaner....	10.5	1.6	1,300	19	16 to 17	23	85	7.5	21 to 22	29.5	2.26	.....
Recleaner..	10.4	1.6	1,300	19	16 to 17	23	85	7.5	29.5	31	3.8	.....

a 1 primary and 2 scavengers in series. *b* 48 (wide) ×44 in. ×21 to 24 ft.

Summary. Gyratory and 2-stage cone crushing (second stage in closed circuit) from large head-size to <3/8-in. ball-mill feed. Grinding single-stage to 28 *mog*. All-flotation

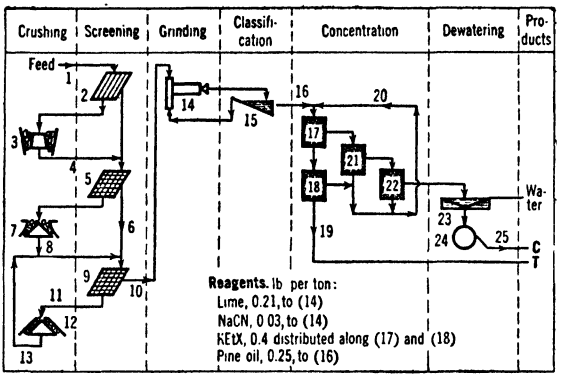

Legend for Fig. 14:

1. 275-ton ore bin.

2. Sheridan grizzly feeder, 10-hp., 2-speed, 3-in. aperture.

3. 1 @ 14-in. Traylor gyratory.

4. Belt conveyor No. 1 (see Table 17); 2 Cutler-Hammer suspended magnets.

5. 1 @ 4×10-ft. 2-deck Niagara screen, 3/8-in. aperture.

6. Belt conveyor No. 2 (see Table 17).

7. 1 @ 4-ft. Symons standard cone crusher. Fitted with dust-collector hoods connected to a 5,000-c.f.m. Claridge exhauster discharging to a cyclone collector at bin.

8. Belt conveyors No. 3 and No. 4 (Table 17) in series; latter, with 2 Cutler-Hammer suspended magnets, delivers to 28-ton surge bin.

9. 2 @ 4×8-ft. 2-deck Niagara screens, 3/8-in. aperture.

10. Belt conveyor No. 6 (Table 17) with weightometer; 1,500-ton concrete bin. Head sampling is to be installed at this point. From bin, ore taken by belt conveyor No. 7 to a 55-ton bin, from which it is fed to a tramway with an 806-ft. span; tramway delivers to a 10-ton hopper, thence by No. 8 conveyor to a distributor over a 1,600-ton mill bin. 5 @ 20-in. belt feeders.

11. Belt conveyor No. 9 (Table 17).

12. 5 1/2-ft. Symons short-head crusher.

13. Belt conveyor No. 10 (Table 17).

14. 4 @ 6×6-ft. Dewco and 1 @ 6×4 1/2-ft. Marcy ball mills.

15. 5 @ 5×25 1/2-ft. heavy-duty rake classifiers.

16. Distributor.

17. 3 @ 21-ft. Forrester cells.

18. 6 @ 21-ft. Forrester cells (3 sets of 2 in series).

19. Tailing sample taken here. Tailing run to a pneumatic "pyrite box" to remove sulphides before sending it underground.

20. 6-in. Wilfley pumps.

21. 1 @ 18-ft. Forrester cell.

22. 1 @ 18-ft. Forrester cell.

23. 30×10-ft. thickener.

24. 2 @ 8×12-ft. Oliver filters.

25. Concentrate bin; 6-mi. tramline.

Table 17. Belt conveyors at Matahambre

No.	Width, in.	Speed, f.p.m.	Capacity, t.p.h.	Motor hp. *a*
1	30	110	150	15
2	20	300	.....	.....
3	20	300	.....	5
4	26	300	.....	25
5	20	300	.....	15
6	20	300	.....	7.5
7	20	300	.....	15
8	20	300	.....	7 1/2
9	20	300	.....	5
10	20	300	.....	5

a All motors geared.

FIG. 14. MINAS DE MATAHAMBRE, S. A.

concentration, with pyrite rejection; rougher-scavenger routing with two cleanings, and counterflow of all middling to the rougher.

Mountain City Copper Co. Fig. 15 (*Q* by John C. Lokken, Concentrator Sup't).

Location: Rio Tinto, Nev.

Ore: Chalcocite, 3.5 to 3.6%; chalcopyrite, 15 to 16.5; pyrite, 15 to 20.5; quartz and carbonaceous shale, 53 to 58%.

Capacity: 475 tons per 24 hr. max.

Assays: Feed: Cu total, 8.6%; Cu oxide, 0.37; Fe, 12.8; insol., 57.7; Au, 0.005 oz. per ton; Ag, 0.20 oz.; concentrate; 25.9% Cu; tailing, 0.58% Cu.

Recovery: 95.7% Cu.

Ratio of concentration: 3.2 : 1.

Labor: American. Tons per man-shift: operating, 30; repairs, 150.

Running time: 98.8%. Inspection and repairs principal causes of delay.

Water: Mine water pumped 1/10 mi. at consumption of 7.5 hp., 78% of water re-used. Net CONSUMPTION, 1.25 tons per ton of ore.

Building: Steel frame; roof insulated and copper covered; sides, corrugated galvanized iron; floors, concrete, steel, and wood sloping 1 1/4 in. per ft. in ball-mill section and 1/4 in. per ft. under flotation slat floor. Heated. Sloping site.

Machinery handling: Hand chain-block hoists.

Power: Purchased; comes 100 mi. at 44,000 volts; motors, 2,200- and 440-volt, 60-cycle. 28.7 hp-hr. per ton milled.

Transportation: Nearest railroad, 90 mi. Ore by conveyor 300 ft. from mine to mill after primary crushing; concentrate shipped to railroad by motor truck, thence 230 mi. by rail to smelter.
Tailing: To pond behind earth dam. Overflow clear.

Legend for Fig. 15:

1. 500-ton bin.
2. 30-in.×120-ft. inclined conveyor.
3. 2 1/2-in. grizzly.
4. 15×24-in. Blake crusher.
5. 1 @ 4×6-ft. Niagara screen, 1/2-in. aperture.
6. 1 @ 4-ft. Symons cone crusher.
7. 1 @ 20-in.×184-ft. inclined conveyor to fine ore bin; Schaffer Poidometer
8. 1 @ 8×6-ft. Marcy ball mill. Magnetic clutch; 2,200-volt @ 250-hp. motor, 300 r.p.m.
9. 1 @ 8×28-ft. 4-in. quadruplex rake classifier, 10-hp. geared motor, 430 r.p.m., 440-volt.
10. Three No. 56 Fagergren rougher cells, 580 r.p.m. *a*

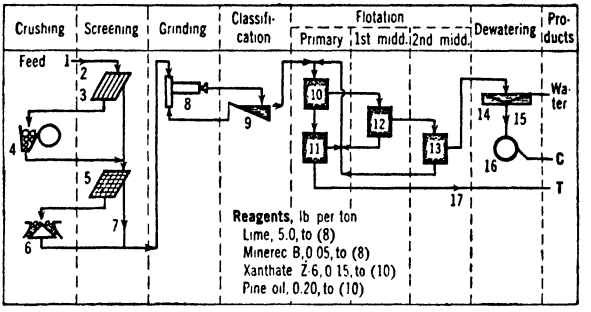

11. Three No. 56 Fagergren rougher cells. *a*
12. One No. 56 Fagergren cleaner cell. *a*
13. One No. 56 Fagergren recleaner cell. *a*
14. 1 @ 50-ft. thickener.
15. Elevator.
16. 8 @ 5-ft. American filters.

a

	Assays, % Cu							
Cell No..	1	2	3	4	5	6	Cleaner	Recleaner
Conc't...	20.8	13.5	8.0	5.1	4.8	3.3	19.8	23.8
Tailing..	4.1	2.6	1.4	1.0	0.7	0.6	6.7	11.5

FIG. 15. MOUNTAIN CITY COPPER CO.

Summary. Crushing from <14-in. to <1/2-in. in two stages (jaw crusher and cone). One-stage ball-mill grinding in closed circuit to flotation feed. All-flotation concentration, rougher-scavenger routing, two-stage cleaning, counterflow of all middling to the rougher.

Magma Copper Co. Fig. 16 (*Q* by J. C. McNabb, Ass't Mill Sup't).

Location: Superior, Ariz.
Ore: Chalcopyrite, bornite, and pyrite in quartz and diabase.
Capacity: 750 tons per 24 hr.
Assays: See Table 18.
Recovery: 96.6%.
Ratio of concentration: 2.64 : 1.
Labor: American, 2/3; Mexican, 1/3. Tons per man-shift: Operating, 50; repairs, 55.4; total, 15.6.
Running time: 83.5%. Principal causes of loss: Grinding-mill repairs, elevator repairs and inspection, summer shutdown of one month to 6 weeks.
Water: Mine water, 1/2 mi. by gravity. 75% re-used. Gross CONSUMPTION, 4 to 5 tons per ton of ore; net, 1.25 tons.
Building: Timber frame, corrugated-iron covering, wood and concrete floors. Unheated. Sloping site.
Machinery handling: Chain blocks.
Power: Smelter waste-heat boilers supplemented by purchased power coming over 70-mi. line at 110,000 volts. Motors: 2,300-, 440-, and 110-volt, 25-cycle. Consumption: 27.5 hp-hr. per ton milled.
Transportation: Spur on property. Ore hauled 1/2 mi. in trains of 12 @ 3 1/2-ton side-dump cars; concentrate pumped (30% moisture) 1/2 mi. to filter plant at smelter.
Tailing: Lifted by pump to 10×12-in. launder on high bents running around 3 sides of tailing pond; 3×4-in. distributing launders spaced 10 ft., fed from holes in bottom of main launder, carry pulp to building dam. Two men required.
Cost (1929): 93¢ per ton total, of which crushing was 8¢, grinding 30¢, and flotation 17¢. (*IC 6319.*)

Table 18. Assays, Magma Copper Co.

Material	Percentages					
	Cu	Fe	CaO	SiO_2	Al_2O_3	S
Feed	5.1	.....	.....	.....	.....	.....
Conc. (combined)	12.9	.....	.....	.....	.....	.....
Conc. (flotation)	15.4	32.1	0.5	9.8	2.4	34.2
Tailing	0.28	7.7	0.9	68.7	9.4	2.9

Legend for Fig. 16:

1. 1,000-ton bin; 8 @ 30-in. apron feeders; 1 @ 30-in. belt conveyor.
2. Grizzly, 4-in. spaces.
3. 24×12-in. Blake crusher.
4. Grizzly, 3/4-in. spaces.
5. 1 @ 4-ft. standard cone crusher.
6. 1 @ 30-in. belt conveyor; 1 @ 18-in. belt conveyor; 1 hand tripper; 1 @ 600-ton and 1 @ 1,500-ton bin; 3 @ 24-in. apron feeders.
7. 3 @ 6×4 1/2-ft. Marcy ball mills.
8. 3 @ 7×14-in. bucket elevators.
9. 3 @ 24-in. duplex Callow screens, 14-m. cloth.
10. 18 @ No. 6 Wilfley tables, 240 @ 7/8-in. s.p.m., concentrate end elevated 1/2 to 3/4 in. make 40% of total recovery of Cu with ratio of concentration = 5.5. Life of 1/8-in. linoleum, 18 mo. (*IC* 6319).
11. 3 @ 7×14-in. bucket elevators.
12. 3 @ 16-in. drag classifiers.
13. 3 @ 5×10-ft. ball mills.
14. 1 @ 3-way distributor.
15. 3 @ 12-cell 3×3-ft. Agitair machines in parallel, 335 r.p.m. Impeller fingers chilled white iron, life 27 to 28 mo. Air consumption, 2,100 c.f.m. for 36 cells. Blower power, 0.63 hp. per cell; impeller power, 2.44 hp. per cell; total, 3.07 hp. per cell, 4.0 hp-hr. per ton of flotation feed. Pulp, 21% solids; *p*H 10.5; time-factor, 10 min.
16. Cells 1 to 6 incl. See Table 18 for assay.
17. Cells 7 to 12 incl. See Table 18 for tailing assay.

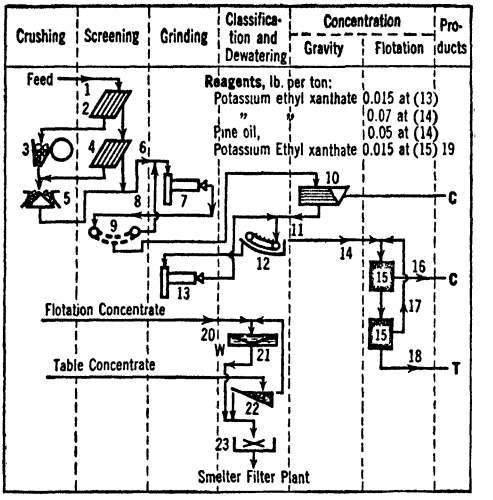

18. 1 @ 4-in. Hydroseal pump.
19. Into fifth cells of each machine.
20. Sump; 2 @ 4-in. Wilfley pumps.
21. 2 @ 46×10-ft. thickeners.
22. 2 @ 8×20-ft. Goldfield agitators.
23. Sump; 1 @ 4-in. Wilfley pump.

FIG. 16. MAGMA COPPER CO.

Summary. Crushing from run-of-mine (head-size) to <3/4-in. ball-mill feed in two stages by jaw crusher and cone in open circuit. Grinding to 65 *mog*, 57% <200-m., in two ball-mill stages, the primary closed with traveling-belt screens, the second by drag classifiers. Concentration comprises gravity scalping of concentrate from primary ball-mill discharge, and bulk flotation of a high-iron low-silica concentrate by a simple rougher-scavenger flow.

The simplicity of this flowsheet is justified by the fact that the smelter receives much siliceous gold ore and needs iron for fluxing. Hence low-grade table concentrate is acceptable and nearly 20% of the mill feed can thus be taken out of the secondary ball-mill and flotation circuits.

Mufulira Copper Mines, Ltd. Fig. 17 (*Q* by Frank Ayer, Gen'l M'g'r, and Jack Ong, Concentrator Sup't).

Location: Mufulira, No. Rhodesia.

Ore: Copper sulphides (chalcocite, bornite, chalcopyrite) and oxides (malachite, azurite, chrysocolla, tenorite, cuprite, native copper) in a highly silicified quartzite containing some weathered feldspar.

Capacity: 8,000 tons per 24 hr.

Assays: See Table 19.

Recovery: Sulphide, 93.8%; total, 86.2%.

Ratio of concentration: 14 : 1.

Labor: 180 tons per man-shift (European), 28 (native), operating; 599 tons per man-shift (European), 178 (native), repairs.

Water: 1.5 to 2 tons per ton of ore net CONSUMPTION; about 80% re-used. Sources are mine and river, distant 1/4 and 3 mi. respectively.

Percentage possible running time: 60 to 80; principal cause of lost time is quota restriction.

Building: Steel, level site; wood and concrete floors, 1/2 in. per ft. slope in concentrator. Unheated.

Machinery handling: Power cranes throughout.

Power: Local station generating at 3,300 volts, 50 cycles; transmission, 1/2 mi. at 3,300 volts; motors, 3,300- and 550-volt; CONSUMPTION, 19.8 kw-hr. per ton ore milled.

Summary. Crushing from <20-in. r.o.m. to <3/8-in. ball-mill feed by gyratory and a 2-stage cone series; grinding to 65-*mog* flotation feed in a simple one-stage ball mill-classifier circuit; all-flotation concentration, comprising a primary rougher and 2-stage scavenger circuit with intermediate dewatering, and 2-step cleaning; regrind of all middling with a scalping cell in the circuit preceding the classifier and sending concentrate to

Table 19. Monthly report on Mufulira concentrator, January, 1939. Composites, wet-screened

Mesh	Solids		Total copper			Copper as oxide			Sulphide copper		
	% Wgt.	Cum. % Wgt.	Assay, % Cu	% total Cu	Cum. % Cu	Assay, % CuO	% total CuO	Cum. % CuO	Assay, % Cu	% total Cu	Cum. % Cu
Feed											
65	3.25	3.25	0.59	0.43	0.43	0.10	0.66	0.66	0.49	0.40	0.40
100	12.50	15.75	0.77	2.14	2.57	0.13	3.30	3.96	0.64	2.00	2.40
150	14.50	30.25	1.28	4.12	6.69	0.24	7.07	11.03	1.04	3.76	6.16
200	12.75	43.00	3.56	10.08	16.77	0.35	9.07	20.10	3.21	10.21	16.37
325	19.50	62.50	6.12	26.51	43.28	0.44	17.43	37.53	5.66	27.62	43.99
<325	37.50	.....	6.81	56.72	.....	0.82	62.47	.....	5.99	56.01	.....
Total....	100.00	100.00	4.50	100.00	100.00	0.49	100.00	100.00	4.01	100.00	100.00
Tailing											
65	3.75	3.75	0.63	3.75	3.75	0.10	0.99	0.99	0.53	7.90	7.90
100	13.25	17.00	0.54	11.34	15.09	0.13	4.54	5.53	0.41	21.59	29.49
150	15.75	32.75	0.47	11.74	26.83	0.20	8.31	13.84	0.27	16.90	46.39
200	15.50	48.25	0.44	10.81	37.64	0.26	10.63	24.47	0.18	11.09	57.48
325	17.25	65.50	0.46	12.58	50.22	0.34	15.47	39.94	0.12	8.23	65.71
<325	34.50	.....	0.91	49.78	.....	0.66	60.06	.....	0.25	34.29	.....
Total....	100.00	100.00	0.63	100.00	100.00	0.38	100.00	100.00	0.25	100.00	100.00
Concentrate *a*											
150	3.50	3.50	32.51	2.06	2.06	0.83	1.65	1.65	31.68	2.07	2.07
200	10.75	14.25	48.73	9.48	11.54	0.88	5.36	7.01	47.85	9.62	11.69
325	29.25	43.50	57.76	30.59	42.13	0.99	16.42	23.43	56.77	31.05	42.74
<325	56.50	.....	56.58	57.87	.....	2.39	76.57	.....	54.19	57.26	.....
Total.....	100.00	100.00	55.24	100.00	100.00	1.76	100.00	100.00	53.48	100.00	100.00

a SiO_2, 10%.

Legend for Fig. 17:

1. 20-in. grizzly on bin.
2. 400-ton bin; two @ 6-ft. Ross feeders.
3. 2 grizzlies, 5-in. opening.
4. 2 @ 30-in. McCully gyratories.
5. 42-in. conveyors to 2,400-ton bin; 4 roll-type feeders; 4 @ 28-in. conveyors.
6. 4 @ 48×102-in. Gyrex, 2-deck screens, 2 1/2-in. and 1/2-in., oversizes combined.
7. 4 @ 5 1/2-ft. Symons cones, set 1 1/4-in.
8. 42-in. conveyors, 1,600-ton bin, 8 roll-type feeders.
9. 8 @ 60×102-in. Gyrex 2-deck screens 1-in. and 3/8-in., oversizes combined.
10. 4 @ 5 1/2-ft. Symons short-head cones, set 5/16-in.
11. To 1,600-ton surge bin.
12. Conveyors and weightometer; 7,000-ton fine ore bin; 29 roll-type feeders; conveyors; 9 Merrick weightometers.
13. 9 @ 10×6-ft. Hardinge ball mills.
14. 9 @ 8×30-ft. heavy-duty duplex rake classifiers.
15. 5 @ 8-in. Wilfley pumps to a 24-point distributor.
16. 93-ft. Agitair rougher and 240 linear ft. of Welsch-type machines.
17. 177-ft. Agitair and 312 ft. of Welsch-type machines.
18. 250-ft. thickener.
19. 2 @ 6-ft. Wilfley pumps.
20. 168-ft. of Welsch-type machines.
21. 2 @ 8-in. Wilfley pumps.
22. 2 @ 6-in. Wilfley pumps.
23. 80 ft. of MacIntosh cleaners.
24. 48 ft. of MacIntosh recleaners.
25. 2 @ 8-in. Wilfley pumps.
26. 1 @ 70-ft. Geco and 1 @ 90-ft. tank thickener in parallel.
27. 4 @ 4-in. Wilfley pumps.
28. 7×10-ft. Allis-Chalmers ball mill.

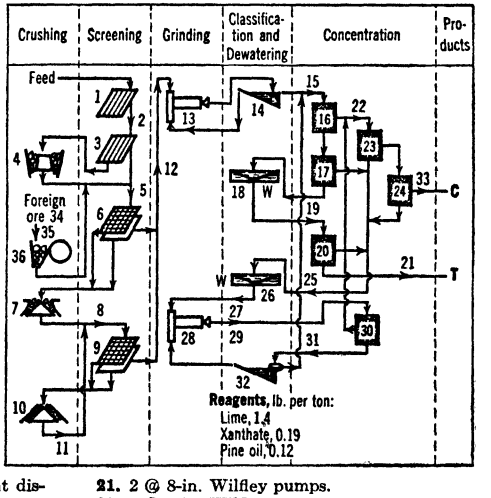

FIG. 17. MUFULIRA COPPER MINES, LTD.

Legend for Fig. 17—Continued:

29. 2 @ 6-in. Wilfley pumps.
30. 40-ft. MacIntosh cells.
31. 2 @ 6-in. Wilfley pumps.
32. 2 @ 12×31-ft. 8-in. bowl-rake classifiers.
33. 2 @ 35-ft. thickeners; 1 @ 2-in. Wilfley pump to 2 @ 10×14-ft. stock tanks; 1 @ 2-in. Wilfley pump; 2 @ 14×12-ft. Dorreo filters; 2 @ 180-ton bins, thence by conveyors to Dennison weigh hopper to smelter.
34. 800-ton bin.
35. Traveling feeder and conveyor.
36. 36×24-in. jaw crusher.

the primary cleaner; return of scalped reground middling to the rougher. No special attempt is made to recover the relatively high percentage of oxide copper (0.5%) and the extraction thereon is less than 25%.

Utah Copper Co. Fig. 18 (*Q* by Staff).

Location: Garfield, Utah.

Ore: Chalcopyrite, bornite, chalcocite, covellite, malachite, azurite, chrysocolla, 2.5% (the chalcopyrite comprising about 75% of the total of copper minerals), pyrite, 2.5% (pyrite is barren of copper, if fine enough); feldspar, 35%; quartz, 30; micas, 20 to 25; chlorite, talc, rutile, apatite, etc., 5 to 10; molybdenite, trace. Fine dissemination.

Capacity: Magna plant, 33,766 tons per 24 hr. (aver. 1937); Arthur plant, 30,815 tons per 24 hr. (aver. 1937). These two plants are treating 100,000 t.p.d. in 1944 without increase in equipment and with little sacrifice in recovery.

Assays: (Magna plant, 1937; Arthur plant substantially the same.) Feed, 0.9761% Cu; concentrate, 34.772; tailing, 0.096.

Recovery: 90.45%.

Ratio of concentration: 39.4 : 1.

Water: By canal 35 mi. from Utah Lake; also from local wells and drainage canals. CONSUMPTION, 2.54 tons per ton milled; 33% of total reclaimed.

Power: Purchased; comes 140 mi. at 130,000 volts; motors 440- and 230-volt, 60-cycle. CONSUMPTION, 16.9 hp-hr. per ton milled.

Mill building: Sloping site. Steel frame, corrugated galvanized-iron covering; concrete floors. Unheated. Machinery handled by power cranes.

Transport: Mine to mill, 17 mi. by standard-gage gondola cars; mill to smelter, 3 1/2 mi. by standard-gage gondola cars; 9.65% moisture in concentrate.

Costs (1930): Crushing to 8-m., 6¢ per ton; grinding to 48-*mog*, 9¢; flotation, 9¢. Total operating cost, about 30¢ per ton, divided: labor 8¢, power 11¢, supplies about 10¢ (*IC 6479*).

Legend for Fig. 18:

1. Gondola cars; 2-car rotary car dump (has dumped 590 cars per 24 hr.); ore pocket.
2. 1 grizzly, 6-in. spaces.
3. 1 @ No. 27 gyratory crusher, 6-in. open setting, 250-hp. motor, 300 r.p.m., direct-connected; speed of spindle, 104 gyrations per min.
4. Storage bin.
5. 2 ore hoppers.
6. 4 @ 60-in apron feeders; 2 @ 54-in. conveyors, with electromagnetic iron detectors which stop the belt when tramp iron passes through the field; 1 hopper.
7. 4 grizzlies, 2 1/2-in. spacing.
8. 4 impact screens, 1-in. aperture.
9. 4 @ 7-ft. standard cone crushers, 3/4-in. set, 237 gyrations per min.; 250-hp. motor.
10. 1 bin; 2 @ 54-in. conveyors with weightometers; 2 @ 30-in. conveyors; 2 @ 42-in. conveyors; 4 @ 30-in. tripper conveyors; 2 fine ore bins; 12 @ 5-ft. vibrating feeders; 12 @ 36-in. elevators.

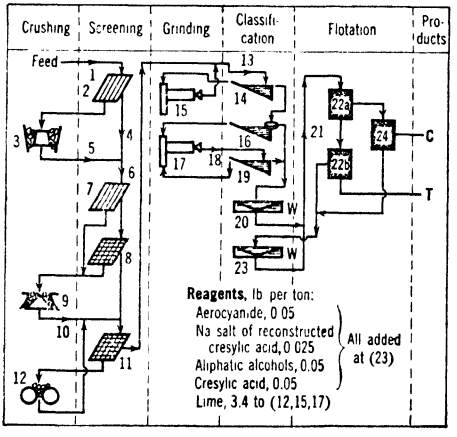

11. 72 @ 4×5-ft. Utah electric vibrating screens to <6- or <10-m., wet.
12. 36 @ 44×16-in. rolls, set close.
13. 12 @ 36-in. elevators.
14. 18 @ 8×14-ft. and 6 @ 12×14-ft. rake classifiers.
15. 24 @ 7×10-ft. ball mills.
16. 12 @ 22-ft. bowl-rake classifiers.
17. 36 @ 7×10-ft. ball mills.
18. 12 @ 36-in. elevators; 12 mechanical distributors.
19. 36 @ 6×17 1/2-ft. and 36 @ 8×17 1/2-ft. rake classifiers.
20. 1 @ 225-ft. and 1 @ 250-ft. thickeners.
21. Sump; 5 @ 12-in. Hydroseal pumps; 2 samplers; 2 @ 5-way distributors; 2 @ 6-way distributors.
22. 59 rows of 10-cell 56-in. oblong Fagergren cells (Sec. 12, Fig. 31) in parallel; 570 to 600 r.p.m., 5.6 hp. per cell; impellers rubber-covered; life: upper, 982 da.; lower, 815 da. Pulp: 28.5% solids, *p*H about 9, time-factor 10 min. (*a*) = cells 1 to 5; (*b*) = cells 6 to 10.
23. 5 @ 75-ft. thickeners.
24. 54 @ 56-in. 1-cell Fagergren machines.

FIG. 18. UTAH COPPER CO.

Summary. Three-stage crushing from steam-shovel size to 6-m. ball-mill feed 2-stage grinding to 65 *mog* for flotation. All-flotation concentration with rougher-scavenger flow on the primary stream and one-stage cleaning.

Nevada Consolidated Copper Corp., Hayden division, Fig. 19 (*Q, IC 6241*).

Location: Ray, Ariz.
Ore: Chalcocite and pyrite in quartz-sericite schist.
Capacity: 12,000 tons per 24 hr.
Assays, % Cu: Feed, 1.5; concentrate, 20.0; tailing, 0.16 to 0.18.
Recovery: 85 to 90%.
Ratio of concentration: 15 or 16 : 1.
Water pumped 1.5 mi. from Gila River with a consumption of 700 to 800 hp. Net CONSUMPTION, 2.5 to 3.0 tons per ton of ore; water from concentrate only re-used.
Power is company generated, using coal or oil for fuel; transmitted 1/4 mi. at 6,600 volts. Motors, 440-volt, 60-cycle. CONSUMPTION, 13.5 hp-hr. per ton milled.
Mill building: Sloping site. Steel frame, galvanized-iron covering. Concrete floors: slope in wet part, 1/2 in. per ft. Unheated.
Machinery handling: Power cranes throughout.
Transport: 26-mi. mine to mill via standard-gage railroad and 60-ton cars. Concentrate shipped 1/2 mi. in railroad cars at 12% moisture.
Running time: 99%. Lost time due to charging rods.
Cost (1928): 40¢ per ton total, of which 11¢ was crushing, 8¢ grinding, and 9¢ flotation; distribution was labor 10¢, supplies 14¢, power 10¢, miscellaneous 5¢ (*IC 6241*).

Legend for Fig. 19:

1. 12 1/2-ton skips; 400-ton receiving bin.
2. Stationary screens, 3-in. sq. aperture, 1 1/4-in. rods.
3. 2 @ No. 8 gyratory crushers, 3-in. open setting.
4. Stationary screens, 1 1/4-in. sq. openings, 1/4-in. rods.
5. 2 @ 4×5-ft. Hum-mer screens, 1-in. sq. openings, 1/4-in. rods.
6. 1 @ 4×5-ft. Hum-mer screen, 1-in. sq. opening, 1/4-in. sq. rods.
7. As (4).
8. 2 @ 36-in.×49-ft. bucket elevators, 18×9×9-in. buckets spaced 12 in., 432 f.p.m.
9. As (4)
10. 2 @ 73×20-in. rolls, 93 r.p.m., set 3/8-in.
11. 2 @ 4×7-ft. Hum-mer screens, 1-in. sq. aperture, 5/16-in. rods.
12. As (4).
13. 1 @ 42-in.×72-ft. inclined belt conveyor, 320 f.p.m.; 1 @ 42-in.×195-ft. inclined belt conveyor, 320 f.p.m.; 1 @ 42-in.×103-ft. shuttle conveyor, 332 f.p.m.; 1 @ 12,000-ton ore bin; 60-ton cars; 2 @ 3,200-ton ore bins; 8 @ 22-in. apron feeders, 8 f.p.m.; 2 @ 24-in. belt conveyors, 220 f.p.m.; 1 @ 30-in.×45-ft. belt-bucket elevator, 15×9×9-in. buckets spaced 19 in., 396 f.p.m.
14. 1 @ 9×12-ft. rod mill per 3,000-ton section, 14 r.p.m., 3-in. rods. Sec. 5, Table 24.
15. 2 @ 18(diam.)×8×28 1/3-ft. bowl classifiers, 2 r.p.m., 21.3 s.p.m.
16. 4 @ 7×10-ft. ball mills, 16 2/3 r.p.m., 2-in. balls.
17. 4 @ 16-in.×24 1/3-ft. belt elevators, 16×8×8-in. buckets spaced 18 in.
18. 4 @ 8×28 1/3-ft. drag classifiers, 17.7 s.p.m.

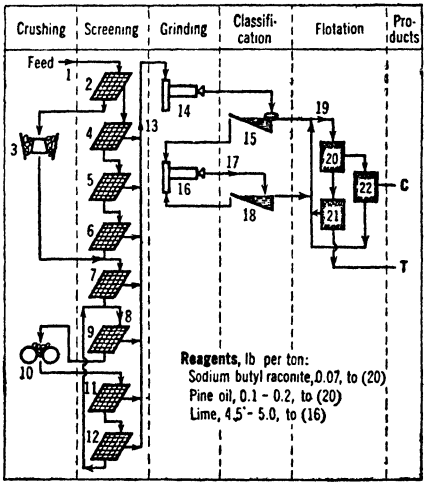

19. Distributor, 8-in. Wilfley pump; 3.4% >65-m., 73 <200-m.
20. 2 @ 30-in.×24-in.(deep)×15-ft. pneumatic cells in series per 2,000-ton section, 26 sq. ft. blanket area, 1/2 in. per ft. slope. Baker 4-ply blankets, life 50 da.; air pressure 4 3/4 lb. per sq. in., pulp, 33% solids, *p*H 11 to 12; time-factor, 1 1/2 min.
21. 6 cells as (20) in series, 78 sq. ft. blanket area; time-factor, 4 1/2 min.
22. 1 as (20), 13 sq. ft. blanket area; concentrate, 5% >100, 74% <200-m.; time-factor, 4 min.; 25% solids.

FIG. 19. NEVADA CONSOLIDATED COPPER CO., Hayden division (RAY).

Summary. Two-stage crushing from <16- or 18-in. r.o.m. to <1-in.; open-circuit rod mill to 19% >14-m.; 1-stage closed-circuit ball mills to 48 *mog* for flotation feed; all-flotation concentration with rougher-scavenger flow on the primary stream and one cleaning.

Phelps Dodge Corp., New Cornelia plant. Fig. 20 (*Q* by H. M. Lavender, Gen'l M'g'r; *141 #9 J44; 134 A 434*).

Location: Ajo, Ariz.

Ore: Chalcocite, bornite, and chalcopyrite in siliceous monzonite porphyry; traces of hematite, magnetite, molybdenite, pyrite, sphalerite, and tennantite.

Capacity: 20,000 tons per 24 hr.

Assays: Feed, 0.93% Cu, including 0.01% oxide Cu; Ag, 0.074 oz., Au, 0.0057 oz.; concentrate, 31.3% Cu, 2.19 oz. Ag, 0.16 oz. Au, 24.5% Fe, 28% S, 13% SiO_2, 2.3% Al_2O_3; tailing, 0.08% sulphide Cu, 0.01% oxide Cu, 3.0% Fe, 0.24% S, 67% SiO_2, 16% Al_2O_3.

Recovery: 92% sulphide copper, 85% Ag, 80% Au.

Ratio of concentration: 37 : 1.

Labor: Mostly American, some Mexican and Indian; 98 tons per man-shift, operating; 144 tons per man-shift, repairs.

Water: 4 tons per ton milled; 0.92 ton per ton net CONSUMPTION. Source, wells 7 mi. distant; pumped to mill through 20-in. steel line; lift 1,160 ft., 6,500,000-gal. storage reservoirs at plant.

Table 20. Power consumption at New Cornelia

	Kw-hr. per ton
Crushing plant	2.79
Grinding	7.58
Flotation	1.42
Concentrate handling	0.12
Tailing disposal	0.28
Reclaimed water	0.89
Concentrate regrinding	0.44
Lighting (mill)	0.07
Miscellaneous (mill)	0.06
Total, exclusive of new water	13.65

Percentage possible running time: 98; general repairs principal cause of lost time.

Building: Steel and concrete, sloping site; concrete floors sloping 1/8 in. per ft. in wet part of mill. Unheated.

Dust control: Ore sprayed at shovel and during loading, dumping, and at numerous points in circuit. A low-pressure exhaust system with wet collection connects with housed-in conveyor-loading and transfer points, screen feeders, screens, screen-feed, and short-head feed bins. Conveyor belts are vacuum cleaned before starting the return run and dust accumulations on the crushing-plant structure are removed by vacuum as a routine procedure.

Machinery handling: Power cranes throughout.

Power: Local steam power plant generating at 2,300 volts, 60 cycles; transmission, 2,000 ft. at 2,300 volts; motors, 2,300- (25-hp. and up) and 440-volt; extensive use of synchronous-type to maintain high power factor; CONSUMPTION, see Table 20.

Transportation: Spur into plant; ore, 1 mi. in 40- to 65-ton side-dump cars; concentrate, 295 mi., 7.3% moisture.

Steel consumption: Crushing plant, total, 0.081 lb. per ton.

Costs: Crushing, $0.088 per ton of mill feed; grinding, 0.098; flotation, 0.042, concentrate retreatment, 0.006; concentrate handling, 0.009; tailing disposal, 0.013; mill water, 0.029; miscellaneous, 0.023; total, $0.308; distributed as follows: labor, $0.088 per ton of feed; supplies, 0.116; power, 0.074; fresh water, 0.013; miscellaneous, 0.017.

Legend for Fig. 20:

1. Steam-shovel mining. Maximum feed size passes through dipper of 4 1/2-cyd. shovels.

2. Trains of 6 @ 40- or 5 @ 65-ton side-dump cars, alternatively to

3. 54-in. gyratory, 7- to 8-in. open setting, via 1 @ 600-ton concrete hopper and 1 @ 8×72-ft. manganese-steel apron feeder; lift 19 ft.; 11 f.p.m.; 75-hp. motor or

3a. 1 @ 5×12-ft. manganese-steel apron feeder, 30 f.p.m., 15-hp. motor with speed reducer; 1 @ 48-in.×662-ft. belt conveyor, 79-ft. lift, 487 f.p.m., 100-hp. motor; 1 @ 42-in.×318-ft. conveyor, 550 f.p.m., 50-hp. motor, suspended magnet, self-propelled reversible tripper delivering to (8).

4. 48-in. gyratory, 6-in. open setting. Tracks pass over crusher bowl. Crusher clogs frequently when ore is blocky. Cranes used to clear.

5. 4 grizzlies, 70-lb. rails spaced 2 in.

6. 4 @ No. 8 Gates gyratories, 3 1/2-in. open setting, 75-hp. motors, Tex-rope drives.

7. 2 @ 36-in.×1,130-ft. belt conveyors, lift 51 ft., 290 f.p.m., 75-hp. motors with speed reducers, suspended magnets, belt-propelled clutch-type tripper car; 2 @ 15,000-ton bins, 11,000 tons available storage ea., one only in use; 4 @ 24-in.×

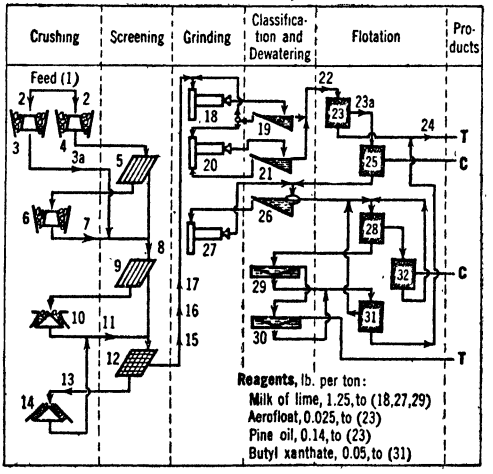

FIG. 20. PHELPS DODGE CORP., New Cornelia plant.

Legend for Fig. 20—Continued:

225-ft. conveyors, 450 f.p.m., 10-hp. motors, fed by self-propelled reversible tripper cars; 1 @ 48-in. ×415-ft. conveyor, 450 f.p.m., 100-hp. motor; 1 @ 48-in. ×418-ft. conveyor, 440 f.p.m., lift 46 ft., 100-hp. motor; 1 @ 48-in. ×480-ft. conveyor, lift 54 ft., 440 f.p.m., 100-hp. motor; 1 @ 42-in. × 314-ft. conveyor, 450 f.p.m., 30-hp. motor, self-propelled and reversible tripper delivering to (8).

8. 2 @ 7,400-ton bins, 4,400 tons available storage each; 16 @ 4-ft. manganese-steel apron feeders, 12 f.p.m.; 4 @ 36-in. ×170-ft. belt conveyors, 10-ft. lift, 272 f.p.m., 10-hp. motors.

9. 4 grizzlies, 2-in. spaces.

10. 4 @ 7-ft. standard cones, 5/8-in. closed set, 325 tons per hr. each, 300-hp. synchronous motors, direct-connected. See Table 21.

11. 4 @ 28-in. ×355-ft. belt conveyors, 18-ft. lift, 400 f.p.m. 20-hp. motors; 1 @ 60-in. ×632-ft. belt conveyor, 30-ft. lift, 650 f.p.m., 200-hp. motor with speed reducer; 1 @ 60-in. ×717-ft. belt conveyor, 26-ft. lift, 650 f.p.m., 200-hp. motor with speed reducer, self-propelled reversible tripper; 1 @ 750-ton surge bin; 48 @ 18(diam.) ×46-in. drum feeders.

12. 48 electric-type vibrating screens, 5/16 × 3/4-in. Ton-Cap. See Table 21.

13. 1 @ 54-in. ×658-ft. belt conveyor, 30-ft. lift, 570 f.p.m., 150-hp. motor; 1 @ 54-in. ×717-ft. belt conveyor, 26-ft. lift, 570 f.p.m., 150-hp. motor, 1 suspended magnet, 1 self-propelled reversible tripper.

14. 6 @ 7-ft. short-head cones, 5/16-in. set. Circulating load 200 to 250%; 166 tons per hr. ea. Crushing to this point is on a 2-shift basis. Steel CONSUMPTION, 0.08 lb. per ton total for primary and secondary crushing.

14*a*. 6 @ 28-in. ×150-ft. belt conveyors, 16-ft. lift, 480 f.p.m., 20-hp. motors with speed reducers.

15. Merrick weightometer; 1 @ 16,000-ton suspended-bunker steel bin (12,000 tons available) extends the full length of the fine-grinding plant.

16. 8 grinding and flotation units, each as follows:

17. 1 @ 24-in. ×92-ft. belt conveyor, 9-ft. lift, 150 f.p.m., 5-hp. motor; Merrick weightometer.

18. 2 @ 6 1/2 ×15-ft. ball mills.

19. 2 @ 78-in. Akins simplex classifiers.

20. 2 @ 6 1/2 ×15-ft. ball mills.

21. 2 @ 78-in. Akins simplex classifiers.

22. 2 @ 5-way distributors. 23% solids; 11.3% >65-m.

23. 13 @ 62-ft. Hunt-Dunn cells. Air pressure, 2 lb. per sq. in.; total air for roughing, 57,640 c.f.m., 863 hp., 4,000 cu. ft. free air per hp-hr. Pulp, 22% solids, *p*H 10; time-factor, 3 1/2 min.; temp. 70 to 100° F. Rough concentrate assay, 16 to 25% Cu.

23*a*. 2 @ 6-in. sand pumps.

24. 1 @ 275-ft. and 2 @ 200-ft. thickeners returning overflow to mill-water supply and spigot at 42% solids by 4 @ 8-in. Wilfley pumps via 2 @ 15-in. wood-stave pipes to tailing dam.

25. 1 @ 12-ft. Hunt-type cell. Produces 50 to 75% of total concentrate tonnage. Pulp, 16% solids, *p*H 10.

26. 3 @ 13-ft. bowl-rake classifiers.

27. 2 @ 8 ×12-ft. ball mills.

28. 1 @ 38-ft. Hunt-Dunn cell; 12% solids, *p*H 9.5. Assay: Cu, 2.7%; SiO_2, 64.6%; Al_2O_3, 12.1%; Fe, 9.1%; S, 4.0%.

29. 1 @ 60-ft. thickener.

30. 1 @ 60-ft. thickener. Overflow to mill-water supply.

31. 1 @ 62-ft. Hunt-Dunn machine; 15% solids.

32. 1 @ 21-ft. Hunt-Dunn cell.

Table 21. Sizing tests of products at New Cornelia

Aperture	Percentage retained												
	Discharge of standard cones	Screen feed	Screen oversize	Discharge of short-head cones	Mill feed	Primary mill discharge	Primary classifier sands	Secondary mill discharge	Secondary classifier sands	Flotation feed *a*	General mill tailing	Cleaner tailing	Final concentrate
1.05-in.	27.9	5.6	15.8	.....	.....	.....	.....	.....	.....	.....	.....	.....	.....
0.74	15.6	4.2	9.1	1.3	.....	.....	.....	.....	.....	.....	.....	.....	.....
0.52	14.8	7.9	14.1	6.4	.....	.....	.....	.....	.....	.....	.....	.....	.....
0.37	9.5	17.8	29.7	23.3	.....	.....	.....	.....	.....	.....	.....	.....	.....
3-m.	5.8	18.0	22.7	24.6	.....	.....	.....	.....	.....	.....	.....	.....	.....
4	4.1	10.5	5.1	12.7	25.6	2.6	2.8	0.2	.....	.....	.....	.....	.....
6	.....	.....	.....	.....	17.7	2.0	1.6	0.2	.....	.....	.....	.....	.....
8	.....	.....	.....	.....	8.9	2.0	1.4	0.2	0.2	.....	.....	.....	.....
10	.....	.....	.....	.....	11.7	5.4	5.8	0.2	0.2	.....	.....	.....	.....
14	.....	.....	.....	.....	6.2	5.4	6.6	0.4	0.6	.....	.....	.....	.....
20	.....	.....	.....	.....	4.4	6.6	8.0	1.0	1.4	.....	.....	.....	.....
28	.....	.....	.....	.....	4.4	10.2	13.2	3.8	4.8	.....	.....	.....	.....
35	.....	.....	.....	.....	3.3	11.4	15.6	7.8	10.0	.....	.....	.....	.....
48	.....	.....	.....	.....	2.8	11.2	15.6	15.6	20.2	1.3	1.7	.....	0.3
65	.....	.....	.....	.....	2.4	10.0	12.6	23.2	28.6	6.0	6.3	.....	1.7
100	.....	.....	.....	.....	2.5	8.0	7.2	16.4	16.8	14.2	13.0	0.3	3.7
150	.....	.....	.....	.....	2.1	5.2	3.0	9.2	7.6	13.9	14.0	1.0	5.7
200	.....	.....	.....	.....	1.3	2.6	1.2	4.2	3.0	9.9	12.7	6.0	8.6
Through last screen	22.3	36.0	3.5	31.7	6.7	17.4	5.4	17.6	6.6	55.3	52.3	92.7	80.0

a For chalcopyrite ores; chalcocite ores require grinding to about 6% >65-m.

Summary. Crushing from steam-shovel size to <5/16-in. ball-mill feed by a 2-stage gyratory and 2-stage cone series; grinding to 48 *mog* for flotation feed in a 2-stage ball mill-classifier circuit with partial closure on the first stage; all-flotation concentration with one-stage roughing at 48 *mog*, light cleaning, regrind of primary cleaner tailing, and a rougher-scavenger flow on this product to make tailing, with one cleaning of regrind concentrate.

Anaconda Copper Mining Co., Fig. 21 (*Q* by Thomas Morris).

Location: Anaconda, Mont.

Ore: Bornite, chalcocite, chalcopyrite, and pyrite coarsely disseminated in granitic gangue.

Capacity: 2,000 tons per section per 24 hr. 8 sections substantially alike. Average daily mill tonnage of copper ore, 15,000.

Assays and recovery: See Table 22.

Ratio of concentration: Cu, 5.96 : 1.

Distances: Mines at Butte, 32 mi. distant by standard-gage railroad; smelter at mill.

Tailing: Flows by gravity about 1/2 mi. to pond on flat below mill.

Legend for Fig. 21:

1. 50-ton standard-gage cars 32 mi. from Butte; 1 @ 40-ft. rotary car-dump, 75-hp. motor, capacity 1,200 tons per hr.; 200-ton (live capacity) bin; 1 @ 54-in. pan feeder, 20 to 40 f.p.m., 15-hp. variable-speed motor; 1 @ 60-in. belt conveyor, 132 f.p.m., 75-hp. motor, wood picked and sent to 50-ton cars via 24-in. belt conveyor; hopper.

2. Grizzly, 3 1/2-in. spacing (one spare).

3. 2 @ 20-in. gyratory crushers, 3-in. closed setting, 225-hp. motor.

4. 1 @ 42-in. belt conveyor, 365 f.p.m.; 3 @ 45-in. suspended magnets over feed end and one over head-pulley; hopper.

5. Ty-rock screen, 1×4-in. aperture (one spare).

6. 1 @ 7-ft. standard cone, 1 1/2-in. closed setting, 225-hp. motor (one spare).

7. 1 @ 42-in. belt conveyor, 365 f.p.m.; sampler; 1 @ 42-in. belt conveyor, 365 f.p.m.; traveling tripper, 34 f.p.m.; 8 @ 2,000-ton ore bins, one per section; following is for one section: 12 @ 24-in. belt feeders from one bin, 9.4 f.p.m.; 2 @ 18-in. belt conveyors, 75 f.p.m.; 2 @ 18-in. wet bucket elevators, 460 f.p.m.

8. 4 @ 3×6-ft. trommels, 7/8-in. rd. holes, 18 r.p.m.

9. 1 @ 55×24-in. rolls, 85 r.p.m.

10. 4 @ 3×6-ft. trommels, 3/8-in. rd. holes, 18 r.p.m.

11. 1 @ 55×24-in. rolls, 85 r.p.m.

12. 2 @ 18-in. bucket elevators.

13. 6 @ 3×6-ft. trommels, 1 1/2×12-mm. slots.

14. 2 @ 55×24-in. rolls, 85 r.p.m.

15. Distributor.

16. 6 Allen cones.

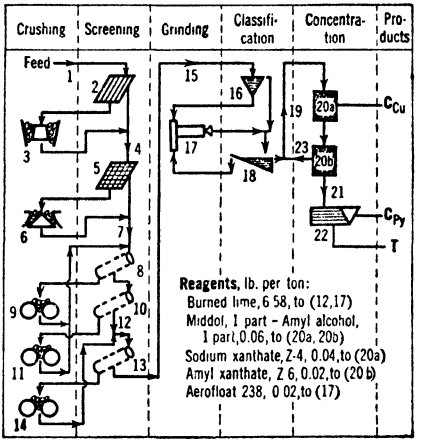

17. 6 @ 8 1/2-ft.×48-in. Hardinge ball mills, 15 r.p.m.

18. 6 @ 4-ft. Dorr D classifiers.

19. 1 @ 18-in. bucket elevator; 1 @ 6-way distributor.

20. 5 @ 15-cell 21-in. (impeller) M-S subaeration machines, 252 r.p.m., 38 hp. consumed each; 1 @ 12-cell 36-in. Agitair machine. (*a*) = first 4 cells; (*b*) = remaining cells.

21. 2 @ 18-in. bucket elevators; 3 @ 8-way distributors.

22. 24 @ 5×16-ft. Wilfley tables.

23. 18-in. bucket elevator.

FIG. 21. ANACONDA COPPER MINING CO., copper plant.

Summary. Five-stage crushing from 12-in. to 1 1/2-mm.; one-stage closed-circuit grinding to flotation-feed size. Selective flotation of copper in a simple rougher-scavenger flow with table recovery of a pyrite concentrate from flotation tailing.

Crushing and grinding represent old practice.

Table 22. Assays and recoveries at Anaconda copper concentrator

Material	Assays, per cent.								Oz. per ton	
	H_2O	Oxide Cu	Cu	SiO_2	FeO	S	Al_2O_3	CaO	Ag	Au
Feed	3.41	.....	4.46	54.9	16.3	14.7	8.1	0.4	2.18	0.0044
Concentrate, Cu...	11.33	.....	25.33	5.5	31.7	36.8	1.6	0.3	12.21	0.0216
Tailing	.....	0.102	0.255	65.0	12.2	10.4	9.4	0.6	0.15	0.0009
Recovery, %	.....	.....	95.23	.....	.....	.....	.....	.....	94.01	83.32

Miami Copper Co. Fig. 22 (*Q* by A. S. Winther; *IC 6573*).

Location: Miami, Ariz.

Ore: Chalcocite, bornite, silicates and carbonates of copper, pyrite, molybdenite, magnetite, and small amounts of gold and silver finely disseminated in a quartz-sericite schist comprising primarily quartz, feldspars, and micas.

Capacity: 17,000 tons per 24 hr.

Assays: Table 23.

Table 23. Assays of products at Miami Copper Co.

Material	Reference number on flowsheet	Percentages				
		Copper			Fe	Insol.
		Total	Oxide	Sulphide		
Feed		0.716	0.112	0.604		
Final concentrate	40	31.36			25.17	4.73
Tailing	27	0.150	0.102	0.048		
Primary-cell middling	28	2.54				
Rough concentrate	30	8.86			9.30	65
Conc., first cleaning	37	24.59				
Froth middling, first cleaning	36	5.48				
Underflow middling, first cleaning	35	0.36	0.21	0.15	2.90	
Underflow middling, second cleaning	39	17.60				

Recovery: 78.9% total Cu; 92.2% sulphide Cu.

Ratio of concentration: 60.4 : 1.

Labor: American. Tons per man-shift: operating, 102.4; repairs, 250.6.

Running time: 98.2%. Principal causes of loss: relining mills, ore shortage, holidays.

Water is pumped from wells a maximum of 3 1/2 mi. through 18-in. wood-stave pipe at a consumption of 1.02 kw-hr. per ton of ore. 77% is reclaimed. Net CONSUMPTION: 2 tons per ton of ore.

Building: Steel frame, corrugated-iron cover, concrete floors, heated by portable stoves. Sloping site.

Machinery handling: Power cranes throughout.

Power is generated by company in steam turbines 1/2 mi. from mill. Motors, 6,600- and 440-volt, 25-cycle. CONSUMPTION: See Table 24.

Table 24. Power consumption at Miami Copper Co.

Operation	Kw-hr. per ton of ore	
	Partial total	Operation, total
Coarse crushing		1.597
Conveying		0.268
Grinding		6.057
Primary	3.996	
Conc. regrind	2.061	
Concentration		2.352
Flotation	0.199	
Blowers	1.413	
Conc. retreatment	0.699	
Lime plant	0.041	
Dewatering and reclaiming water		0.881
Tailing disposal		0.247
General		0.057
Total		11.459

Transportation: Railroad on property. Crushing plant at shaft. Mill ore, 1,200 ft. by belt conveyors. Concentrate shipped 2 mi. by rail to smelter.

Tailing disposal: See Sec. 20, Art. 3.

Summary. Crushing from <10-in. r.o.m. to <3/8-in. ball-mill feed in primary cones followed by two rolls in series, the second rolls in the series in closed circuit with a screen battery. Grinding to 35 *mog*, 51% <200-m. flotation feed in ball mills in three stages, with four stages of classification of which the third closes the circuit on the second grinding stage and the fourth (bowl) both closes on the third grinding stage and finishes the overflows of the preceding three stages of rake classification. All-flotation concentration in a rougher-scavenger primary circuit, 2-stage cleaning after regrind, with rich middling counterflowed to the regrind circuit, and low-grade middling to the third stage of the primary-grinding circuit. Lime only, and that in relatively small quantity, added in

steps, is used for depressing pyrite; a greater quantity depresses chalcocite. An exceptionally high grade of concentrate is made and the recovery of sulphide copper is remarkable

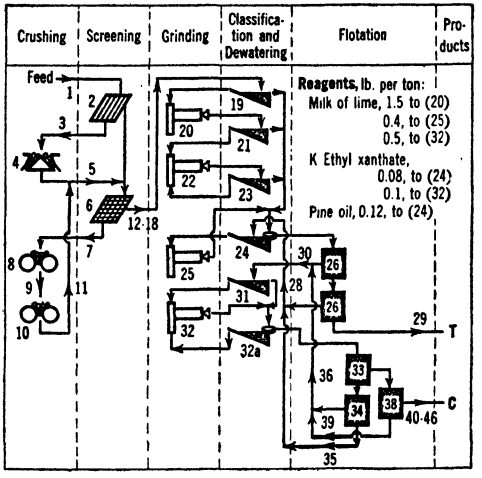

Legend for Fig. 22:

1. The following, down to item 16, is one of three similar units fed at the rate of 550 tons per hr. each. Mine run ore, all through 10-in. grizzly underground (some sledging necessary), to 1 @ 1,400-ton circular steel bin, pan feeder.

2. Cantilever grizzly, 4(wide)×5 1/2 ft., 1-in spacing.

3. Table 25.

4. 1 @ 7-ft. cone crusher, set 5/8 in.

5. Conveyor (Table 25); surge bin, 5 roller feeders.

6. 5 vibrating screens (one Traylor, 4 @ 66×72-in. Mitchell), 5/16-in. (top half) and 3/8-in. (bottom half) sq. aperture.

7. Table 25.

8. 77×24-in. A-C rolls, set, according to hardness of ore, to crush to 5/8-in., 125 r.p.m.; 400-hp. motor; 0.41 kw-hr. per ton.

9. Table 25.

10. 80×24-in. Traylor rolls, set, according to hardness of ore, to crush to 1/4-in , choke-feed, 160 r.p.m.; 300-hp. motor; 0.68 kw-hr. per ton. Speed of these rolls was increased to the figures given to take care of larger tonnages without appreciable increase in repair costs.

11. Table 25.

Table 25. Conveyors in Miami mill

Reference No.	Width, in.	Length, ft.	Slope, in. per ft.	Speed, f.p.m.	Motor hp.
3	36	20	4 1/2	133	5
5	36	80	4 1/2	613	50
7	36	45	0	323	10
9	36	31	0	474	15
11	36	166	4 3/8	402	75
12	36	92	0	564	25
13	36	312	2 5/16	542	150
14	36	379	2 5/16	542	150
15 *a*	36	476	0	518	50
18 *b*	24	24	3 2/3	283	5
44	16	126	0	222	7.5
45	16	39	4	151	5

a Equipped with tripper.
b Equipped with weightometer.

12–15. Table 25. Power consumption by all conveyors to this point: 0.24 kw-hr. per ton.

16. 1 @ 1,000-ton and 1 @ 850-ton circular steel bins per crushing-plant section, equipped with Challenge feeders. Contents: 5% >1/4-in., 18% <65-m.

17. The following, down to item 30, is one of six similar units.

18. Table 25.

19. 1 @ 8×14-ft. duplex rake classifier.

20. 2 @ 8-ft×36-in. conical ball mills.

21. 2 @ 6×19-ft. duplex rake classifiers.

22. 2 @ 8-ft.×36-in. conical ball mills.

23. 2 @ 6×19-ft. duplex rake classifiers with scoop elevators.

24. 1 @ 28(diam.)×20×42-ft. bowl-rake classifier.

25. 1 @ 10 1/2×8-ft. Williamson ball mill.

26. 1 @ 100-ft. Miami-type matless flotation cell. Table 26.

27. Table 23.

28. Table 23.

29. 1 @ 325-ft. traction thickener.

30. Table 23; 8 tons per hr. Relatively coarse, and contains much locked middling.

31. This and the following equipment, including concentrate re-treatment and dewatering, comprise one section taking concentrate from the six grinding and roughing-flotation sections, items 17 to 30. 1 @ 6×19-ft. duplex rake classifier.

32. 2 @ 6×12-ft. A-C ball mills.

32*a*. 1 @ 15(diam.)×6×23 1/3-ft. bowl-rake classifier. Overflow practically all <200-m.

33. 1 @ 5 1/2×33-ft. Miami-type matless cell. See Table 26.

34. 2 @ 5 1/2×33-ft. Miami-type matless cells. See Table 26.

35. Table 23.

36. Table 23.

37. Table 23.

38. 1 @ 5 1/2×20-ft. Miami-type matless cell. Table 26.

39. Table 23.

40. Table 23.

41. 2 @ 60×10-ft. thickeners, 3 1/4 min. per rev.; 2-hp. motors; spigot, 70% solids.

42. 3 @ 11 1/2(diam.)×12-ft. Oliver filters, 9 min. per rev., 2-hp. motors.

43. 9% moisture.

44, 45. Table 25.

46. Conveyors to 50-ton cars to smelter.

FIG. 22. MIAMI COPPER CO.

considering the grade of feed. Owing to relatively coarse primary grinding, rejection of better than 90% of the mill feed at this size, and the use of exceptionally large machines, with corresponding economies both in operation and carrying charges, milling costs are kept down to about 26¢ per ton milled.

Table 26. Flotation operating data at Miami

Function	Machine: Flow-sheet reference number	Machine: Type and size	Tons solid per machine per hr.	Air: Pressure, lb. per sq. in.	Air: Cu. ft. free air per min. per machine	Kw-hr. per ton	Time-factor, min.	Pulp: Per cent. solids	Pulp: Temp., deg. F.	Pulp: pH	Assays	Attendance
Primary rougher.....	26	Matless *a*	121	2.25	8,500	1.412	6 to 8	30	42 to 78 *b*	9.5	See Table 23	See note *f*
First cleaner...	33	Matless *c*	47 *g*	2.25	2,640	1.25	3 to 4	15	42 to 78 *b*	*d*		
Middling re-treatment...	34	Matless *c*	11 *g*	2.25	2,640	2.90	7 to 8	15	42 to 78 *b*	*d*		
Final cleaner.	38	Matless *e*	26	2.25	1,600	5.7	16	15	42 to 78 *b*	*d*		

a 67 in. wide, 30 in. deep, 100 ft. long.
b According to season.
c 67 in. wide, 30 in. deep, 33 ft. long.
d Saturated solution $Ca(OH)_2$. Too great excess of suspended lime destroys selective action.
e 67 in. wide, 30 in. deep, 20 ft. long.
f Two operators per shift for the 30 cells comprising 6 sections.
g New feed. Circulating load roughly doubles this.

Nevada Consol. Copper Corp., Chino division. Fig. 23 (*Q; 140 ✱ 9 J 29*).

Location: Hurley, N. M.

Ore: Chalcocite as small stringers and veinlets and as scattered grains in highly metamorphosed quartz-diorite porphyry and sedimentaries. In some parts of the mine azurite, malachite, chrysocolla, and cuprite accompany the chalcocite. The principal gangue minerals are quartz, pyrite, sericite, and halloysite.

Capacity: 17,500 tons per 24 hr.

[General data continued on p. 50.]

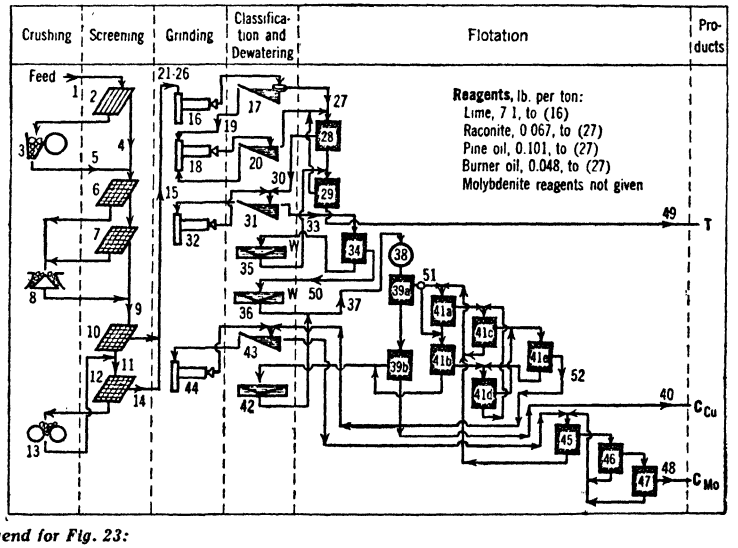

Legend for Fig. 23:

1. Steam-shovel mining; 50 and 60-ton gondola cars; Wellman rotary car-dump.

2. Grizzly, 8-in. spaces.

3. 1 @ 84×66-in. A-C jaw crusher, 8-in. open setting.

4. 1 @ 2-way splitter.

5. 2 @ 6-ft. apron feeders; 2 @ 48-in. belt conveyors.

6. 2 @ 6×5-ft. vibrating screens, 2 1/2-in. sq. openings.

7. 2 @ 6×5-ft. vibrating screens, 1×2-in. openings.

8. 3 @ 7-ft. standard cones, set 1/2-in., 230 gyrations per min.

9. 1 @ 54-in. belt conveyor, 20° rise, 8-ply belt; 2 @ 42-in. belt conveyors; 2 semiautomatic trippers; 1 @ 18,500-ton bin; 3 @ 34-in. belt conveyors; 3 sections, each as follows:

10. Sec. 1, 1 @ 4×5-ft. vibrating screen; Sec. 2, 2 @ 4×5-ft.; Sec. 3, 1 @ 4×7-ft. Hum-

FIG. 23. NEVADA CONSOLIDATED COPPER CORP., Chino Division (CHINO).

Legend for Fig 23—Continued:

mer screen with 2 V-40 vibrators, all 1/4×3/4-in. apertures.

11. 1 @ 38-in. elevator with 2 rows 18×10 1/2×8-in. buckets spaced 22 in.; surge bin; 4 roll-type feeders.

12. 4 @ 4×5-ft. Hum-mer screens, 0.19×0.75-in. apertures.

13. 1 @ 72×20-in. Garfield rolls, 110 r.p.m.; circulating load, 520%.

14. 2 @ 36-in. belt conveyors (for #4 section); 2 @ 36-in. shuttle conveyors; 14 @ 860-ton bins.

15. 4 sections thus, 1,625 tons per 24 hr. each.

16. 1 @ 7×10-ft. rod mill.

17. 1 @ 15-ft. (diam.)×8×26.7-ft. bowl-rake classifier; alkalinity of overflow, 4.5 cc. $N/10$ H_2SO_4.

18. 2 @ 7×10-ft. ball mills.

19. 2 @ 20-in. bucket elevators.

20. 2 @ 8×26.7-ft. rake classifiers; alkalinity 9 cc. $N/10$ H_2SO_4.

21. 5 sections at 2,200 tons per hr. each have, in order (Nos. 22 to 29):

22. 1 @ 7×12-ft. ball mill.

23. 1 @ 8×26.7-ft. heavy-duty duplex rake classifier; overflow alkalinity 7.5 cc. $N/10$ H_2SO_4.

24. 1 @ 15-ft. (diam.)×8×26.7-ft. bowl-rake classifier, overflow 4 cc. $N/10$ H_2SO_4.

25. 2 @ 7×10-ft. ball mills.

26. 2 @ 8×26.7-ft. rake classifiers; overflow alkalinity 9 cc. $N/10$ H_2SO_4.

27. 12 rows of flotation cells @ 1,450 tons per 24 hr. each; feed, 1.03% Cu, 0.025% MoS_2; 20% solids; 20% >200-m.

28. 1 @ 6 1/2 (wide)×3×27-ft. Southwestern flotation cell.

29. 2 @ 27-ft. Southwestern flotation cells in series.

30. From 12 rows of roughers; 16.6% Cu, 28.5% Fe, 16.2% insol.

31. 2 @ 4 1/2×31-ft. Akins classifiers.

32. 2 @ 8×6-ft. ball mills; 250% circulating load.

33. 5% >200-m.

34. 4 @ 6 1/2 (wide)×3×18-ft. and 2 @ 6 1/2 (wide)×3×9-ft. Southwestern flotation cells.

35. 1 @ 48-ft. thickener.

36. 1 @ 26-ft. thickener.

37. 3 @ 7-ft. steam tanks; 205° F., condition 70 min.

38. 1 @ 8-ft. conditioner.

39*a*. First two cells of 1 @ 6-cell No. 30 Denver rougher flotation machine.

39*b*. Remaining 4 cells of (39*a*).

40. 1 @ 48-ft. thickener; filters. 27% Cu; 0.080 MoS_2.

41*a*. Cells 5 and 6 of 1 @ 8-cell No. 18 Denver cleaner flotation machine.

41*b*. Cells 8 and 9 of (41).

41*c*. Cell 4 of (41).

41*d*. Cell 3 of (41).

41*e*. Cells 1 and 2 of (41).

42. 1 @ 26-ft. thickener.

43. 1 @ 18-in Akins classifier.

44. 1 @ 3×3-ft. ball mill.

45. 1 @ 22×27-in. Denver flotation cell.

46. As (45).

47. As (45).

48. 2-leaf 4-ft. disk filter; drier. MoS_2, 85%; Cu, 0.80%; insol., 3.0%.

49. 0.22% Cu, 0.007% MoS_2; alkalinity, 9.7 cc $N/10$ H_2SO_4.

50. Cu, 30.5%, MoS_2, 0.5%.

51. Cu, 17%, MoS_2, 46%.

52. MoS_2, 80 to 85%; Cu, 1.5 to 2.0%; insol., 4 to 7%.

Assays: Feed (aver.) 1.24% Cu, 2.96% Fe; Cu concentrate (aver.), 27.8% Cu, 27.6% Fe, 4.3% insol.; MoS_2 concentrate, 85% MoS_2, 0.80% Cu, 3% insol.; tailing, 0.22% Cu.

Recovery: (1938) 80.7%.

Ratio of concentration: Cu, 31.2 : 1.

Running time: 99.1%; principal delay due to repairing and charging rod and ball mills in primary grinding.

Power: Steam-power plant at millsite, using coal and gas as fuel; 440-volt 60-cycle motors; CONSUMPTION, 18.6 hp-hr. per ton of ore milled, distributed substantially as follows: crushing, 14%; grinding, 55%; flotation, 11%; dewatering, 2.0%; water supply, 18%. Crusher plant is controlled from an observation booth located between the car-dump and the jaw crusher.

Water comes 4 mi. from deep wells through 20-in. line, 224 hp.; CONSUMPTION, 3.3 tons gross per ton of ore milled; 70% reclaimed.

Mill building: Sloping millsite. Building, steel and concrete, corrugated-iron enclosure; concrete floors sloping 1/2 in. per ft. in wet section. Unheated.

Machinery handling: By power cranes throughout.

Tailing disposal: By gravity 6,590 ft. by 30-in. wood-stave pipe at slope of 4.7 ft. per 1,000; a cylindrical concrete distributor box feeds through 20-in. wood-stave lines and launders to different parts of the tailing pond. (See also *IC 6394*.)

Distances: Mine to mill 9 mi.; ore comes in 80-ton gondola cars by A.T. & S.F.R.R.; smelter at concentrator.

Summary. Three-stage crushing in jaw crusher, cone and closed-circuit rolls from steam-shovel size to 1/4-in.; two (or three) -stage grinding in open-circuit rod mills and closed-circuit ball mills to 3% > 48-m. flotation feed; rougher concentrate reground before cleaning. All-flotation concentration, with rougher-scavenger primary flow, regrind of rough concentrate before cleaning.

Phelps Dodge Corp., Morenci plant. Fig. 24 (*23 MMt 258*).

Location: Morenci, Ariz.

Ore: Porphyry; chalcocite and pyrite with some covellite; much clay. Open-pit mining with 4 1/2-cyd. shovels.

Capacity: 27,000 tons per 24 hr. Being enlarged to 45,000 to 50,000 tons capacity (1943).

Assays: Feed, 1% Cu aver.; it is planned to send rock containing 0.5% Cu to the mill. Concentrate (based on 1-yr. large-scale pilot-plant work), 21.2% Cu, 29.4% Fe, 38.3% S, 9.4% insol. Tailing, 0.15% Cu.

Recovery: 85.9% (92.6% sulphide).
Ratio of concentration: 24.3 : 1.
Water: 4 tons per ton of feed; about 80% reclaimed.

Legend for Fig. 24:

1. 80-ton side-dump cars in 11-car trains with 125-ton (1,325-hp.) trolley-battery electric locomotives from pit, 3 mi. average haul. Normal dump interval 1.4 min.; have operated on 1.04 min. interval. Feed runs as coarse as 6- to 8-ft. in one dimension.

2. Grizzly (Fig. 26, item *d*); stationary, heavy I-beams capped with manganese-steel castings; slope 40°±slight adjustment; spacing increases to 9-in. along the run. About 60% oversize with normal blasting.

3. 1 @ 60-in. gyratory, short-shaft suspended-spindle double-discharge type (Fig. 26, item *g*). 500-hp. @ 265-r.p.m. motor direct-connected through a tear coupling with rubber-fabric disk. Forced-feed lubrication to the eccentric and main step bearings with overflow to bevel gears and pinion-shaft bearings; circulation through a cooling tower; separate noncirculating mechanical oil feed to the suspension bearing. Remote start-and-stop control from the car-dumping platform, with signal lights from transport equipment up to the primary-storage bin (Fig. 27, item *m*).

4. 190-ton surge pocket (Fig. 26, item *h*).

5. 300-ton surge pocket (Fig. 26, item *e*).

6. 2 @ 72-in.×38-ft. manganese-steel apron feeders in parallel (Fig. 26, item *j*); variable-speed d.-c. motors direct-connected through triple-reduction herringbone gearbox; electrically interlocked with the following conveyor; capacity at 39 f.p.m. with 42-in. depth of load (controlled by hinged leveling weights), 2,250 t.p.h. 2 @ 54-in.× 700-ft. belt conveyors in parallel (Fig. 26, item *i*), lift 125 ft. at 15°, vertical radius 350 ft., 425 f.p.m., 2,300 t.p.h. max. capacity at safe tension. 1 @ 13,000-ton steel suspension bunker. 8 @ 48-in. apron feeders. 2 @ 60-in. gathering conveyors in parallel; run at 200 f.p.m. to permit hand picking of wood and nonmagnetic steel. Mushroom magnets over the belts, and magnetic head pulleys.

7. 2 @ 6×14-ft. Ty-rock screens with cross-rod (1 1/4-in. diam.) surface, 3-in. spacing, 20 1/2° slope.

8. 2 @ 7-ft. standard cone crushers in parallel; set 2 1/2 in.

9. 4 @ 5×10-ft. Ty-rock rod-deck screens; transverse rod, 3/4-in. spacing.

10. 4 @ 7-ft. short-head cone crushers, set 5/8-in.

11. 2 @ 54-in. gathering conveyors; 1 @ 54-in. transfer conveyor; 1 @ 54-in.×800-ft. conveyor, 75-ft. lift at 20° slope, 475 f.p.m., with traveling tripper (max. safe capacity, >2,500 t.p.h.). 1 @ 16,000-ton (live) steel-plate suspension bunker, 448 ft. long, flat rack-and-pinion cutoff gates, 4 for each ball mill (item 12). 16 @ 36-in. short gathering belt conveyors parallel to bin axis, with variable-speed d.-c. motors; delivering to 16 @ 24-in. ball-mill feed conveyors at constant speed, with weightometers actuating motor-driven rheostats on the line to the variable-speed motors on the preceding gathering conveyors.

12. 16 @ 10×10-ft. grate ball mills (10 ft. 2 in. diam.×10 ft. 5 in. inside liners), 17.9 r.p.m., 800-hp. synchronous motors, 50-ton ball charge.

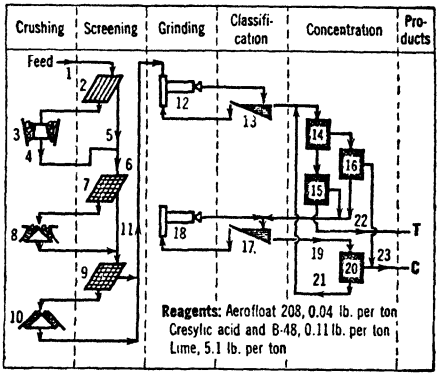

Special discharge trunnion has 4 spiral passages; alternate spirals discharge by ports in the trunnion to one launder and by the normal lip to a second.

13. 32 @ 56-in. duplex submerged-spiral Akins classifiers (2 in parallel per mill). Overflow, 65 *mog*; pulp density, 17% solids, is dictated by classification requirements.

14. 80 @ 66-in. Fagergren square-type roughing flotation cells in 20 parallel level-bottom rows of 4 cells ea. Thickening feed to 25% solids gave only 20% increase in capacity despite an increase in time-factor of roughly 30%; further thickening to 33% solids lowered concentrate grade without improving recovery.

15. 160 @ 66-in. Fagergren square-type scavenging flotation cells in 20 parallel level-bottom rows of 8 cells ea.

16. 52 @ 56-in. Fagergren square-type primary cleaner cells in 4 @ 4- and 12 @ 3-cell parallel level-bottom rows.

17. 3 @ 54-in. duplex submerged-spiral Akins classifiers.

18. 3 @ 8 1/2×12-ft. ball mills.

19. 6 @ 8-in. Wilfley pumps.

20. 40 @ 56-in. Fagergren square-type secondary cleaner cells in 8 @ 3- and 8 @ 2-cell parallel level-bottom rows.

21. 8-in. sand pumps.

22. Main tailing launder, slope 3/8-in. per ft.; 8(deep)×12×13-ft. distributing box; 4 @ 300-ft. traction-type thickeners; overflow to a 1,000,000-gal. sump and thence by 4 of 5 @ 5,000-g.p.m. centrifugal pumps to main supply tanks; spigot products by 3 @ 8-in. pipes from each thickener all to a head box; tailing sampler; tailing launder (54 in. wide at top, 21 1/2 in. deep, U-shaped with slanting sides, 16,000 ft. long, 2% grade); 4 distributing pipes on trestles, discharging through 6-in. plug valves at 54-in. intervals to 4 tailing dams with chimney weirs; 6 collector pumps; 50,000-gal. equalizing tank; 3 @ 1,000-g.p.m. centrifugal pumps to the above million-gallon sump.

23. 2 @ 100-ft. thickeners; water to head tanks; spigot to bucket elevator to 4 @ 7-leaf 8 1/2-ft. disk-type filters; cake to belt conveyor to concentrate beds at smelter.

FIG. 24. PHELPS DODGE CORP., Morenci plant.

Plant

The plant, shown in plan in Fig. 25, comprises the crushing and concentrating unit, the smelter, the tailing-disposal and water-recovery system, and the power plant. The site was graded to permit

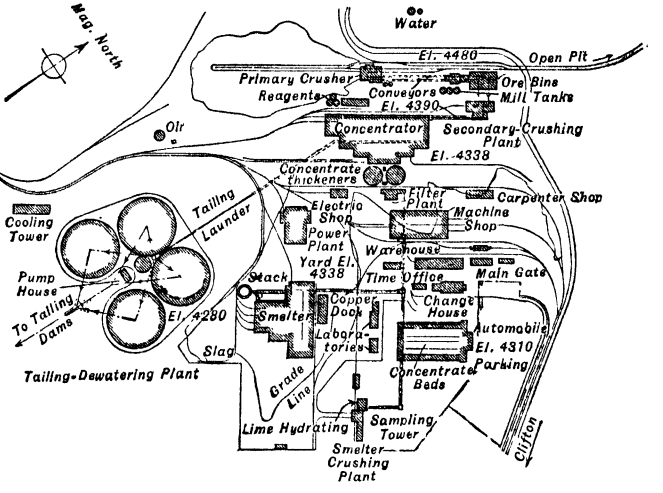

FIG. 25. Plan of milling and smelting plant at MORENCI.

parallel placing of the long axis of buildings as shown, with a drop of about 140 ft. from the feed floor of the primary crusher to the bottom floor of the concentrator, which is also the level of the yard, the smelter, and the power plant.

Primary-crusher house (Fig. 26) comprises a steel and concrete structure 73 ft. wide, 110 ft. long, and about 150 ft. from eaves to lowest floor, of which about 100 ft. is below the feed floor. Ore cars *a* dump into pocket *b*, lined on sides and back with rail set close and bolted to the walls, and protected on the bottom by the dead load. The ore, at diminished velocity, slides over grizzly *d*. Undersize falls into pocket *e*, 317 tons live capacity, protected against wall wear by the 30-in. shelves *f*, which are tipped with manganese-steel angles upturned to hold a bed and take the edge wear on the shelves. Grizzly oversize, crushed in the gyratory, falls into 190-ton (live) surge pocket *h*. Simultaneous discharge from *e* and *h* is into the ends of 2 @ 8×5 1/2-ft. bottom gates *i* onto 2 parallel 72-in. ×38-ft. feeders *j* and thence into one or both feed boxes *k* which feed over grizzlies (not shown) onto belts *l*, which transfer to bin *m*, Fig. 27. For further detail of the various apparatus see items 1 to 6, Fig. 24.

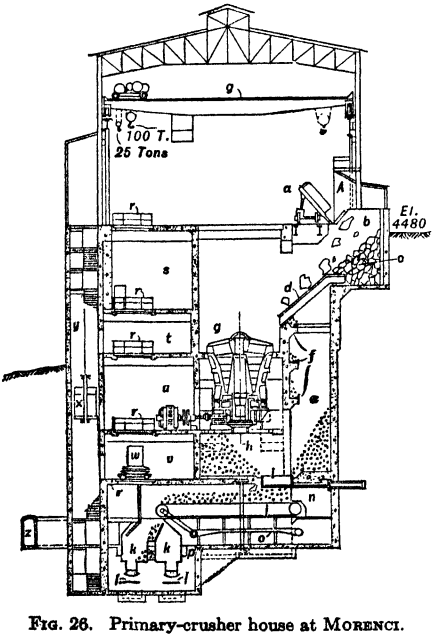

FIG. 26. Primary-crusher house at MORENCI.

Provision has been made for installation of a Ross chain curtain between *b* and *d*, if this appears desirable to prevent excessive bounding.

The drop from the lower end of *d* to the level of the gyratory hopper is such that the minimum slope for the furthest horizontal travel is 45°.

The combined live capacity of *e* and *h*, on the basis of a 60 : 40 split between oversize and undersize in run-of-mine is about 320 tons. With a feed rate during unloading of 3,430 t.p.h. (see Fig. 24, item 1) and 2-shift operation for 27,000 t.p.d. (1,700 t.p.h.), this surge capacity at best spreads the load 320/3,430 = 9.3%, *i.e.*, the normal hourly load comes in in about 21 min. and must be taken away in 23 min. Hence these pockets are essentially nothing more than ore-lined chutes to take impact from feeders *j*.

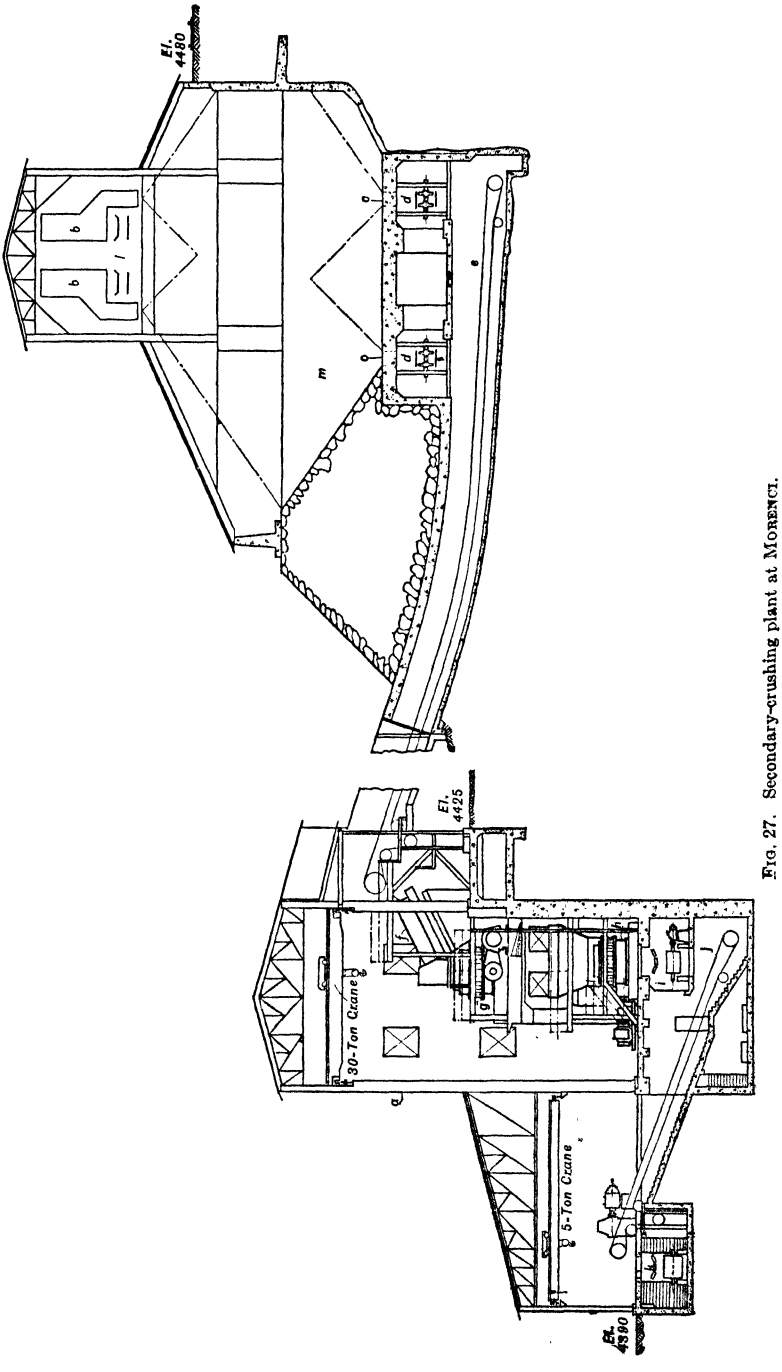

FIG. 27. Secondary-crushing plant at MORENCI.

Exit *i* is placed well over toward pocket *e* so that ore must hang up in *e* on a slope greater than 75° before flow through *e* ceases; with a mean fall of about 35 ft. from *d* to the pile in *e*, it is unlikely that <9-in. ore will stand on a steeper slope than this. Gate *n* is hydraulically operated, with an available push of 50,000 lb. total.

Item *o* is 2 parallel 54-in. belt conveyors to take spill from the return run of feeders *j* and deliver via chutes *p* onto conveyor *l*.

Crane *g* has a slow-speed 100-ton hook and a higher-speed 25-ton hook. It is directly available to the gyratory, both for maintenance and to handle the jam hook; the track section over the grizzly is

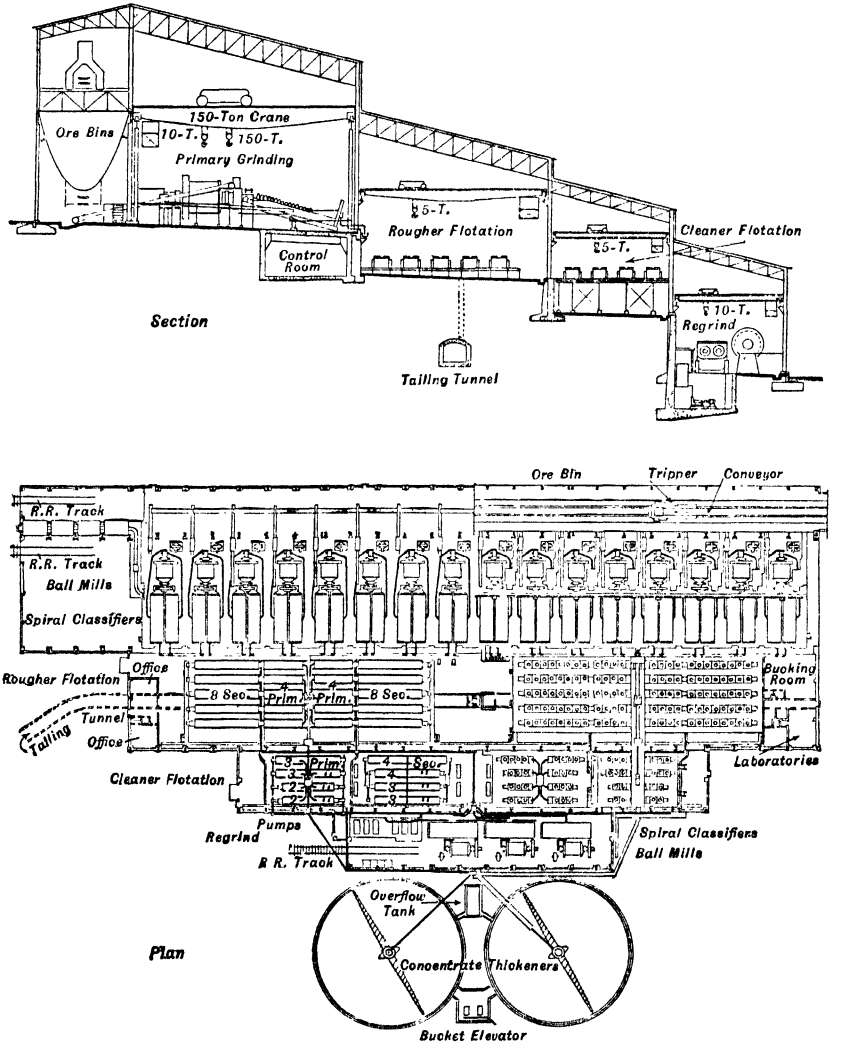

FIG. 28. Concentrator building at MORENCI.

removable, so that the crane can serve the grizzly; finally, through hatches *r*, it serves in succession the air-conditioned belt-storage room *s*, fan room *t*, motor room *u*, room *v* entered by car *w* on which the bottom plate of the gyratory may be lowered, and finally the feeder floor. Elevator *x*, serving rooms *t*, *u*, and *v*, is 10-ton capacity. A service track enters the building alongside the ore track.

Stair-well *y* and tunnel *z* give access to the structure from feed floor and secondary-crushing plan respectively.

Secondary-crushing plant (Fig. 27) consists of the primary storage bin *m* and the steel and concrete building *a* with the enclosed machines. Conveyors *l* from the primary plant (Fig. 26)

discharge via trippers *b* into bin *m*, and ore passes thence by 8 gates *c* and feeders *d* to 2 parallel conveyors *e*, to screens *f*, primary cone crushers *g*, scalping screens below *g*, short-head cones *h*, gathering conveyors *i*, transfer conveyors *j*, and main conveyor *k* to the mill bins (Fig. 28). For details of this apparatus see items 6 to 11, Fig. 24. Features particularly pointed out by the designer are: (1) the multiple draw gates *c* and feeders *d*, 4 to each conveyor *e* and crusher *g*, operated by push button from the crusher house; each feeder has sufficient capacity for the crusher; two feeders are normally operated at a time at reduced rates; in case of feed failure due to bridging, starting the other two will normally restore flow; one common cause of delay in fine-crushing plants with storage preceding is thus eliminated. (2) Ample non-blind screen capacity, thus eliminating crusher choking due to fines in the feed; this is particularly necessary with cone crushers, if the ore contains clayey fines and moisture content runs above 4 or 5%. The rod-deck screen was found on test to be less subject to blinding than a meshed-screen surface, and placing the rods across the flow reduced tramp oversize in the undersize. (3) Provision of undersize chutes permitting as nearly as possible vertical fall. (4) Elimination of wood and tramp iron by hand picking and ample magnets on belts *e*. (5) Pyramid arrangement of machines with vertical access to all by the crane hooks. (6) Adequate dust control (see Fig. 29). (7) A central lubricating system, which circulates the oil at constant temperature, and sufficient oil-storage facilities, with an oil centrifuge for cleaning the circulating supply when necessary.

Concentrator (Fig. 28) has the typical shape and general machine arrangement of most large modern plants, with the mill bins forming the back, the grinding floor in front of these with a mill-repair and standby bay at one end, rougher and cleaner flotation successively on lower floors below, and regrind on the lowest floor. The slope available was more than was needed, as evidenced by the fact that the working floor for the flotation cleaners is built up some 10 ft. and the drop therefrom to the regrind floor is much greater than necessary. The only uphill counterflow of pulp is that of reground middling.

The only unusual points of design are the high percentage of repair and standby stands for the primary ball mills (4 stands against 16 active mills), which undoubtedly involved provision for future expansion; and the location of the electrical-control room at a point where the responses are not visible to the man at the controls. This is not, however, serious in this case, since the large crane is available to kick mills through fractional turns, when this practice is necessary.

Dust collection systems are installed at the primary crusher, primary-ore bin, secondary-crushing house, and fine-ore bins. Fig. 29, showing the installation in the primary-crusher house, is typical. All dust-making locations, which is to say, all places where dry ore moves rapidly through air, or is stopped suddenly, are enclosed as thoroughly as possible. Thus in Fig. 26 a brattice of rubber belting at *A*, together with the roofed and walled enclosure to the right, substantially encloses pocket *b* at this point, and with the floor above the gyratory, confines the dust formed and suspended in *b*, *e*, *h*, and the gyratory itself. This dust is withdrawn by suction through pipes *a* and *b*, Fig. 29. The ore stream on feeders *j* (Fig. 26) is completely boxed in, as are the chutes *k* and the skirting on conveyors *l* up to the point that the load has settled; these places are served by suction ducts *c*, Fig. 29. The screens, chutes, cones, and the conveyor head boxes and loading points in the secondary-crushing plant are similarly boxed in and connected with another suction system, as are also the bin tops and unloading tunnels.

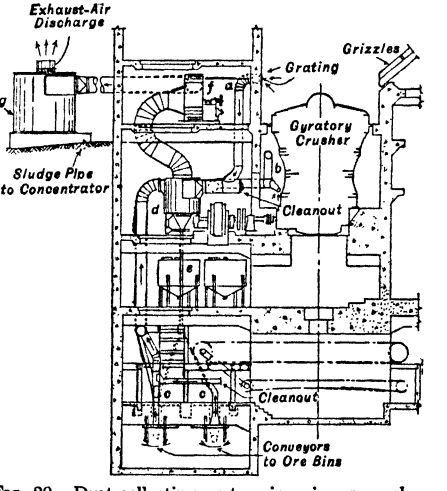

FIG. 29. Dust-collecting system in primary-crusher house at MORENCI.

The layout of the collecting systems at all of the points enumerated above is the same, differing only in size of units. It comprises a cyclone *d* (Fig. 29), which drops out sand for direct return dry to the ore stream, as by pipe *e* leading to the conveyor belts; a centrifugal exhaust fan *f*, with back-curved blades, discharging to a spray collector *g*, comprising a tank with sprayed baffles against which the dust-laden stream impinges, the dust particles being wetted and entering the water film. For detailed discussion of the collecting apparatus see Art. 9. Sludge from all spray collectors flows to the regrind circuit in the concentrator. Estimated air volumes and power consumption for the system are given in Table 27.

Table 27. Dust-collecting systems at Morenci

Location	Exhaust air, c.f. per min.	Static pressure of fan, in. of water	Hp.
Primary-crushing house	40,000	4	20
Primary ore-bin superstructure	20,000	3	15
Primary ore-bin substructure	8,000	4 1/2	10
Secondary-crushing house	40,000	4	20
Conveyor-drive house	3,000	2	2
Fine-ore bins	22,400	3	20
Totals	133,400	..	87

Summary. Three-stage open-circuit crushing in gyratory and cones to 3/4-in., with scalping screens ahead of each crusher; one-stage grinding to 65 *mog;* all-flotation with 2-stage roughing, pyrite depression from primary-rougher concentrate, middling regrind followed by separate cleaning, with counterflow of regrind-cleaner tailing to the primary rougher.

Aldermac Copper Corp., Ltd. Fig. 30 (Q by A. C. King, Mill Sup't).

Location: Aldermac, Quebec, Canada.

Ore: Approximate mineral composition: chalcopyrite, 5.5%; sphalerite, 0.4%; pyrite, 40%; pyrrhotite, 28.1%; insoluble, 26%.

Capacity: 1,000 tons per 24 hr.

Assays: See Table 28.

Table 28. Assays at Aldermac

Material	Per cent.					Oz. per ton	
	Cu	Zn	Fe	S	Insol.	Au	Ag
Feed	1.9	0.2	35	32	26	0.01	0.36
Copper conc.	25.2	.....	29.8	21.6	6.8	0.083	3.20
Pyrite conc.	0.13	.....	44.3	49.9	4.4	.....	.....
Tailing	0.20	.....	30.3	14.8	41.3	.....	.....

Recovery: 90% on copper.

Ratio of concentration: 15 : 1.

Labor: Canadian and French Canadian. 44 tons per man-shift, operating; 111 tons, repairs.

Water: Pumped 14,060 ft. against 215-ft. static head from lake to 150,000-gal. tank at mill by 2 @ 2-stage 5-in. centrifugal pumps, 1,450 r.p.m., 1,000-g.p.m. capacity. One pump at lake and one at

Legend for Fig. 30:

1. 200-ton bin; vibrating feeder; 1 @ 42-in. belt conveyor, 86 f.p.m.

2. 1 @ 36×48-in. jaw crusher, 4-in. open setting.

3. 1 @ 30-in. belt conveyor, 214 f.p.m.; suspended magnet.

4. 2 @ 4×8-ft. vibrating screens, guard-deck 1-in. opening, screen 1/4-in. apertures.

5. 1 @ 30-in. belt conveyor, 214 f.p.m.

6. 1 @ 4×6-ft. vibrating screen, 1 1/4-in. aperture.

7. 1 @ 4-ft. standard cone crusher.

8. 1 @ 4-ft. short-head cone.

9. 1 @ 30-in. conveyor, 150 f.p.m.; 3-way distributing chute; 1 @ 450-ton and 2 @ 500-ton flat-bottom wood bins; 3 feeders.

10. 1 @ 7×7-ft. Marcy ball mill, center discharge, 22 r.p.m., direct drive, 250-hp. synchronous motor; 2 @ 8×7-ft. Dominion mills, center discharge, 21 r.p.m., reduction-gear drive from 200-hp. induction motors. 86% solids. 2.0 lb. balls per ton of new feed.

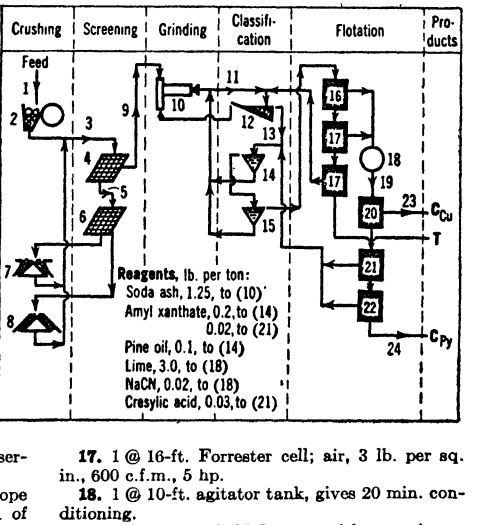

11. 5 @ 6-in. Kimball-Krogh pumps, 3 in service, 2 in reserve.

12. 1 @ 8×20-ft. duplex rake classifier, slope 2 1/2 in. per ft., 22 s.p.m. with Marcy mill; 1 of the same at 2 1/4-in. slope and 24 s.p.m. for one Dominion mill; 1 @ 72-in. Akins classifier, slope 4 in. per ft., 3 r.p.m. with other Dominion mill. Sands contain 15% <200-m.; overflow, 40% solids, 55% <200-m.

13. 2 @ 6-in. A-C SRL pumps (one in reserve).

14. 1 @ 5-ft. cone classifier; 25% <200-m. in spigot product; overflow, 35% solids, 0.8% >48-m., 65% <200-m.

15. 1 as (14).

16. 2 @ 10-cell banks of No. 24 Denver Sub-A machines in parallel, 250 r.p.m., 5 hp. per cell; pulp, 35% solids, *p*H 9.6, temp., 50 to 90° F. winter to summer; time-factor, 19.5 min. Bulk concentrate: 4.2% Cu, 40.2% Fe, 44.7% S, 6.4% insol.

17. 1 @ 16-ft. Forrester cell; air, 3 lb. per sq. in., 600 c.f.m., 5 hp.

18. 1 @ 10-ft. agitator tank, gives 20 min. conditioning.

19. 1 @ 6-in. A-C SRL pump (also one in reserve).

20. 1 @ 12-cell No. 24 Denver Sub-A machine; pulp, 35 to 40% solids; time-factor, 14.6 min.

21. 1 @ 6-cell No. 24 Denver Sub-A machine.

22. 1 @ 20-ft. Forrester cell; air, 3 lb. per sq. in., 800 c.f.m., 6 hp.; time-factor, 12.3 min.

23. 1 @ 30×10-ft. thickener; 1 @ 5×6-ft. Feinc string filter and 1 @ 6-ft. 3-disk American filter in parallel; cake, 9.5% moisture.

24. 1 @ 2-in. Dorrco diaphragm pump; 2 @ 3-ft. cone classifiers in series making overflow at 10% solids and 98% <200-m. to pyrite stock pile, and spigot at 50% solids and 50% <200-m. to 1 @ 8×12-ft. Dorrco filter, cake 7.2% moisture.

FIG. 30. ALDERMAC COPPER CORP.

center of hydraulic gradient. 2 @ 75-hp. motors. 12-in. wood-stave pipe, steel-wire bound. Efficiency, 78%. CONSUMPTION, 3.1 tons per ton of ore; none re-used.

Percentage possible running time: 95; power interruption and repairs are principal causes of lost time.

Building: Timber with shiplap siding covered with white asbestos siding; sloping site; ball-mill floors cement; flotation floors wood grated; floor slope in wet parts, 5/8 in. per ft. Steam heat.

Machinery handling: Hand-operated cranes in crushing and grinding sections; chain blocks in concentration section.

Power: Purchased. Transmitted 92 mi. at 110,000 volts. Motors, 550-volt, 25-cycle.

Transportation: Mill at mine; railroad, 1 1/4 mi. distant; copper concentrate trucked to siding and shipped 1,000 mi. to smelter.

Summary. Run-of-mine to <1/4-in. ball-mill feed by jaw crusher and 2-stage cone series; ball-mill grinding to 48 *mog* in one stage for flotation with cone classifiers guarding the mechanical-classifier overflow; all-flotation concentration, making a bulk copper-iron concentrate by a rougher-scavenger flow, and depressing pyrite therefrom with lime and cyanide.

Britannia Mining & Smelting Co. Fig. 31 (*Q* by A. C. Munro, Sup't of Mills, and his metallurgical staff).

Location: Britannia Beach, B. C.

Ore: Chalcopyrite, pyrite, blende, and minor amounts of chalcocite and bornite in chlorite schist. The primary slime, mostly from the highly oxidized ore from the upper levels, amounts to about 13% of mill feed. The water decanted therefrom carries soluble salts in the following amounts: $CuSO_4$, 0.17 lb. per ton of mine ore; $FeSO_4$, 0.33 lb.; free acid, 0.09%; $CaSO_4$, 1.71 lb.; $MgSO_4$, 0.14 lb.

Capacity: 6,000 tons per 24 hr.

Assays: Feed, 0.80% Cu; copper concentrate, 24 to 27% Cu, 5 to 8% Zn, 31% Fe, 2% insol., 0.15 to 0.21 oz. Au; pyrite concentrate, 0.25% Cu, 50% S, 3% insol.; tailing, 0.1% Cu, 0.001 oz. Au.

Recovery: 89 to 92% Cu.

Ratio of concentration: 25 or 30 : 1.

Water: Piped 5 mi.; consumption, 3 to 4 tons per ton milled; none reclaimed.

Power: Hydroelectric, local and purchased; latter comes 30 mi. at 34,000 volts; 440-volt 60-cycle motors; CONSUMPTION, 22.3 hp-hr. per ton milled.

Labor: Canadian; 105 tons per man-shift operating; 600 tons per man-shift on maintenance.

Running time: 98 to 99%; principal cause of loss, power failure.

Mill building: Sloping site. Steel and concrete, concrete floors slope 1/2 in. per ft. in wet portion. Mill building heated. 30-ton crane in coarse-crushing section; chain blocks and crawls in concentration sections.

Distances: Mine to mill, 3 mi., 20-ton bottom-dump cars; concentrate (10.5% water) shipped 200 mi. by water.

Tailing disposal: Discharged into Sound at tide level.

Cost (1931): 20¢ per ton, of which crushing was 5¢, grinding 5¢, and flotation 3¢. (*IC 6619.*)

Legend for Fig. 31:

1. Coarse crushing is done underground.

2. Grizzly, 6-in. aperture.

3. 1 @ 36×48-in. Blake crusher, 6-in. open setting. 1 @ 24×36-in. Blake stand-by.

4. Feed requires washing to reduce screening difficulties. 3 @ 500-ton coarse-ore bins: 2 @ 500-ton wet-ore bins; feeders with vigorous sprays; 30-in. belt conveyor with sprays.

5. 2 @ 5/8-in. stationary grizzlies, with vigorous sprays.

6. 3 @ 5 1/2-ft. cone crushers, set 5/8-in.

7. Washing elevator.

8. 4 @ 15-ft. washing screens, 3/16×1/2-in aperture.

9. 3 @ 42-in. belt conveyors in series.

10. 10 @ 5×4-ft. Hum-mer dry screens, 1/8-in. Ty-rod covering.

11. 4 @ 54×18-in. and 1 @ 72×19-in. Traylor rolls.

12. Drag classifier. Overflow is 30 to 40% of the feed to classifier, which is the <1/4-in. material comprising 23 to 30% of mill feed. Size is 97 to 98% <65-m.

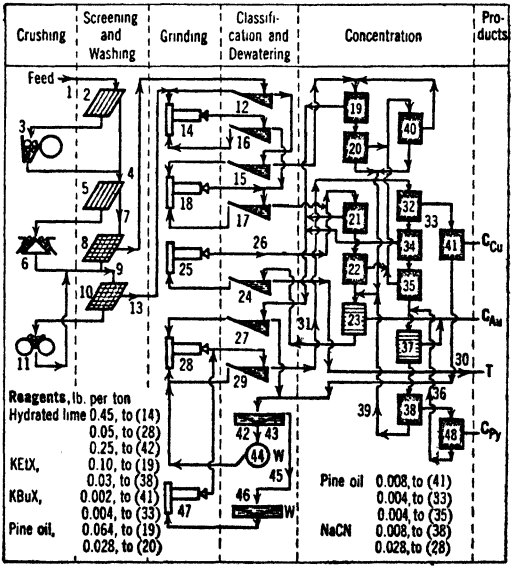

FIG. 31. BRITANNIA MINING & SMELTING CO.

Legend for Fig. 31—Continued:

13. 3 @ 30-in. belt conveyors in series, second with weightometer; 6 @ 600-ton fine-ore bins, feeders, 3 weightometers, and samplers.

14. 6 @ 6×11-ft. primary ball mills (3 sections); 2-in. quenched cast-steel balls used in all mills; consumption, 1.6 lb. per ton.

15. Munro elevator classifier.

16. 2 duplex rake and 3 Munro classifiers.

17. 3 duplex rake and 15 Munro classifiers.

18. 18 @ 5 1/2×9-ft. secondary ball mills.

19. Concentrate sections of 2 @ 4(wide)×3× 100-ft. Forrester roughers; air, 1 3/4 lb. per sq. in., 60 c.f.m. per lin. ft., 65 hp. per 100-ft. cell; pulp, 28% solids, *p*H 8.5, temp. 40° F.; time-factor, 7 min.

20. Middling sections of (19).

21. Concentrate section of 1 @ 4(wide)×3× 100-ft. Forrester rougher and 1 @ 5(wide)×8× 100-ft. Forrester machine; air, 4 lb. per sq. in., 50 c.f.m. per lin. ft., 180 hp. per 100-ft. cell; pulp as in (19).

22. Middling section of (21).

23. Blanket tables; 7 in parallel, 2 1/2×40-ft., slope 1 1/2 i.p.f., medium-grade wool blanket held by loose iron strips at side, pulp flow 1/2 in. deep. Blankets taken up on rollers and washed, concentrate side down, in a small tank once per shift; discarded after 3 mo. Concentrate assays 3 to 5 oz. Au; recovery 10% of total Au in heads (*IC 6619*).

24. Tailing elevator and classifier.

25. Tailing-regrind ball mill.

26. Pump.

27. 1 @ 8-ft. drag classifier.

28. 1 @ 6×10-ft. concentrate regrinding mill.

29. Duplex rake classifier.

30. Sampler.

31. Pump.

32. 1 @ 4(wide)×3×75-ft. Forrester cleaner; air, 1.7 lb. per sq. in., 45 c.f.m. per lin. ft., 45 hp. per 75 ft.; pulp, 25% solids, *p*H 10, 40° F.; time-factor, 15 min.; tailing, 0.8 to 2% Cu; conc., 20% Cu, 6% Zn.

33. Pump.

34. Concentrate section of 1 @ 100-ft. Forrester machine.

35. Middling section of (34).

36. Pump.

37. Blanket table.

38. 1 @ 50-ft. and 1 @ 40-ft. Forrester pyrite rougher, in series.

39. Pump.

40. 1 @ 57-ft. Forrester machine.

41. 1 @ 15-ft., 5×8-ft. deep air cell; pulp, 10% solids, *p*H 9.5; temp., 40° F.; time-factor, 15 min.; tailing, 12% Cu, 0.15 oz. Au; feed, see (32); conc., see *Assays*.

42. 1 @ 40×14-ft. thickener.

43. Elevator.

44. 1 @ 6-ft. 6-disk American filter.

45. Pump.

46. 1 @ 40×14-ft. and 1 @ 16×14-ft. thickeners.

47. 1 @ 6×10-ft. ball mill.

48. 1 @ 4(wide)×3×30-ft. Forrester machine; air, 1.7 lb. per sq. in., 45 c.f.m. per lin. ft.

Summary. Three-stage crushing from run-of-mine to <1/8-in. with washing and separation of <1/4-in. material with primary slime before secondary crushing. Two-stage grinding to 48 *mog*. Separate sand and primary-slime roughing to make bulk concentrate, which is reground and refloated to depress pyrite. Sand tailing of primary run, after straking and desliming, is reground and recirculated to the sand rougher. Refloated copper concentrate is cleaned once, as is pyrite concentrate refloated at the end of the primary-cleaning run. Regrinding is thus kept down to 12 to 15% of original feed.

Howe Sound, Holden mill, Fig. 32 (H. A. Pearse, Mill Sup't, and V. A. Zanadvoroff, Met., *140 # 11 J 31*).

Location: Holden, Wash.

Ore: Chalcopyrite with small amounts of native copper, chalcocite, covellite, and malachite; gold and silver; pyrite and pyrrhotite in the approximate ratio 3 : 1; minor sphalerite and insignificant galena and molybdenite; total sulphides about 20%; in a metamorphosed quartzite cut by diorite and granite dikes. The gold appears to be associated with all the sulphides, but chalcopyrite is the main carrier and pyrrhotite and sphalerite carry least; it is 90% free at 60% <200-m.

Capacity: 2,000 tons per 24 hr.

Assays: Concentrate, 23 to 24% Cu.

Recovery: Cu, 94%; Au, 81 to 83%. About 5% of total gold is heavily coated; some is finely locked in the gangue and some in the pyrite and sphalerite, both of which are depressed to help concentrate grade.

Power: All motors over 50-hp. are 2,300-volt synchronous, thus maintaining an average power factor of 96%. Starting, control, and meter equipment are housed in a separate dustproof building. Units operated by remote push-button control. Crushing-plant conveyors and feeders are electrically interlocked with the crushers and with each other. CONSUMPTION, kw-hr. per ton: Crushing, 2.4; fine grinding, 10.1; flotation, 2.5; filtering, thickening, pumping, 0.7; tailing disposal and return water, 0.6; lighting and miscellaneous, 0.4; total, 16.7.

Labor: 40 operators and helpers on 3 shifts; 8 to 10 mechanics on maintenance on day shift.

Mill building: Steep sloping site. Building steel and concrete; roof insulated with rock-wool on Carey stone and under corrugated iron; walls 3-in. Thermax, corrugated-iron outside, Gunited inside. Heating by unit oil burners at strategic points in lower part of building. Crushing plant is separately housed, and provided with a dust-collecting and air-washing system.

Machinery handling: All main operating floors served by overhead cranes delivering to an inclined hoistway to the shops.

Tailing disposal: Impounded in a 10-acre area close to the mill.

Distances: Mill at mine. Concentrate loaded by conveyor from filter or drier into 5-ton steel containers. These are trucked 12 mi., thence 40 mi. by barge and 4 mi. by truck to the Great Northern

Railroad at Chelan Falls, Wash., whence the concentrate goes by covered cars to the Tacoma smelter. Cranes for handling the containers are provided at all transhipment points.

Costs (cents per ton): Crushing, 9.8; grinding, 19.7; flotation and pumping, 8.6; concentrate handling at mill, 2.0; tailing disposal, 2.5; general, 9.2; total, 51.8.

Legend for Fig. 32:

1. Underground grizzly, 27-in. spacing.

2. 7-ton Granby-type side-dump cars from main haulage tunnel; 1 @ 700-ton mine-ore bin with 1 @ 5×26-ft. pan feeder.

3. Grizzly, 6-in. spacing.

4. 1 @ 36×48-in. Traylor jaw crusher, 5-in. open setting.

5. 1 @ 36-in. belt conveyor with magnetic head pulley and suspended magnet.

6. Grizzly, 1 1/2-in. spacing.

7. 1 @ 4 1/2-ft. standard cone crusher, set 1 1/4-in.

8. 3 @ 24-in. inclined belt conveyors in series; surge bin.

9. 2 @ 4×8-ft. Tyler vibrating screens, 3/8-in. cloth.

10. 1 @ 5 1/2-ft. short-head cone, set 3/8-in.

11. 1 @ 700-ton surge bin; 2 feeders; 1 @ 24-in. conveyor belt with suspended magnet.

12. 1 @ 3×6-ft. Symons rod-deck screen, 3/16-in. openings, run wet to take wet sticky undersize out of the fine-crushing circuit.

13. 1 @ 24-in. belt conveyor, 1 @ 1,500-ton fine-ore bin with 4 feeders; 2 @ 24-in. parallel feed conveyors with weightometers; 1 @ 24-in. distributing conveyor, chutes, and splitters.

14. 4 @ 8×9-ft. Traylor ball mills, direct-connected, 250-hp. low-speed synchronous motors; ball charges about 25 tons each of 2 1/2-in. cast balls. Circulating loads are 400 to 500%, making about 2,000 tons per 24 hr. total feed to mill. Total ball CONSUMPTION, 3.4 lb. per ton; cast chrome-molybdenum liners, 0.25 lb. per ton.

15. 4 @ 7×25-ft. heavy-duty rake classifiers. Overflow 26 to 27% solids; all <65-m., 60% <200-m.

16. 1 @ 5×60-ft. matless-type air cell, 10 ft. deep.

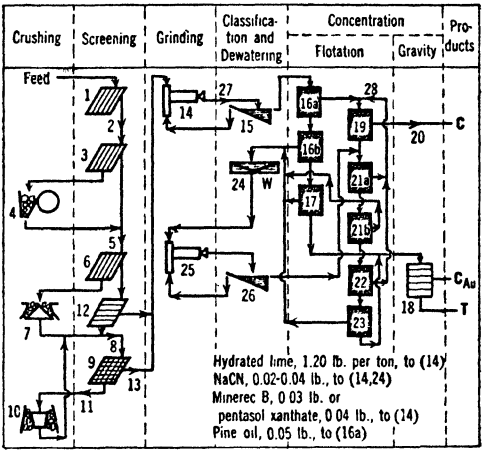

17. As (16). These two cells give a combined primary treatment time of 40 min.

18. 40×40-ft. blanket plant.

19. 1 @ 5×20-ft. deep-type matless cell.

20. 1 @ 30(diam.)×8-ft. thickener, overflow clear; 2 @ 6-ft. 4-disk Eimco filters making cake at 10 to 11% moisture; 1 @ 16-in. conveyor; 1 Lowden concentrate drier to 7 or 8% moisture; used in winter only, to prevent freezing in transit.

21. 1 @ 5×40-ft. deep-type matless cell.

22. 1 Fagergren cell.

23. 4 Fagergren cells in series.

24. 1 @ 50(diam.)×10-ft. thickener, clear overflow.

25. 1 @ 5×8-ft. ball mill.

26. 1 @ 6×23 1/3-ft. rake classifier; overflow 98% <200-m.

27. *p*H = 9.0–9.5.

28. Generous quantities of water added here to drop fine silica and mica.

FIG. 32. HOWE SOUND, Holden mill.

Summary. Three-stage crushing to 1/4-in.; crusher feeds scalped; last stage a short-head cone in closed circuit; two-shift operation. One-stage primary grind to <65-m.; one-stage regrind of primary and refloated low-grade middling. Concentration by flotation with protracted treatment of primary stream and of primary cleaner tailing, making final tailing over blankets on both streams. Separate regrind of low-grade froth middling and return to the primary-cleaner stream. Froth counterflow on the cleaner stream but not on the primary stream.

The purpose of the separate circuit for middling regrind, and reintroduction to the first scavenger on the cleaner stream rather than to the cleaner is, first, to give opportunity for a second try at depression of Fe and Zn, and second, to force such material to float at least twice on return to the flotation cells, if it is to get into finished concentrate.

Mt. Lyell Mining & Railway Co., Ltd. Fig. 33 (*Q* by C. H. P. Moline and staff; *33 CEMR 75*).

Location: Mt. Lyell, Tasmania.

Ores: A chlorite-quartzite schist carrying pyrite, chalcopyrite and covellite; also a quartzite carrying bornite, chalcopyrite, and chalcocite.

Capacity: 3,200 tons per 24 hr.

Assays: See Table 29.

Table 29. Assays at Mt. Lyell

Material	Percentages				Oz. per ton	
	Cu	Fe	S	Insol.	Au	Ag
Feed	1.45	10	7.2	.....	0.013	0.09
Copper conc	25.4	30.8	33.9	.....	0.15	1.20
Pyrite conc	0.6	42.7	48.2	5.0	.....	.....
Tailing	0.17	5.8	2.6	.....	.....	.....

Recovery: 89.5% Cu.

Ratio of concentration: 20.7 : 1, based on Cu concentrate.

Labor: Australian. Tons per man-shift: operating, 50; repairs, 137.

Running time: 97.5%. Motor repairs principal cause of delay.

Water: 2 mi. by gravity from dam in stream. No reclamation. CONSUMPTION, 2.5 tons per ton milled.

Building: Steel frame, galvanized-iron cover; floors concrete at ground level, timber above, slope in wet parts 0.3 in. per ft. Unheated. Site level.

Machinery handling: Air and electric hoists.

Power: Hydroelectric; comes 7 mi. at 6,600 volts. Motors, 500- and 3,300-volt, 50-cycle. 27.4 hp-hr. per ton milled.

Transportation: Railroad at plant. Ore from underground mine comes 1 1/2 mi. by electric haulage through adit; open-cut ore hauled 1 mi. in 12-ton motor trucks to main ore-pass from surface to adit. Concentrate pumped 1,100 ft. from mill to smelter filter plant.

Tailing: Thickened tailing used for mine filling as required; balance, unthickened, to river.

Costs (10/1/39–12/29/40): Crushing, $0.066 per ton; grinding, 0.16; flotation, 0.091; concentrate dewatering, 0.01; conveying and elevating, 0.023; overhead, superintendence, and miscellaneous, 0.117; total, $0.48.

Legend for Fig. 33:

1. <30-in. r.o.m.

2. 1 @ 300-ton (2,240-lb.) steel bin, Ross 9-chain feeder.

3. 1 @ 25-in. Ruwolt gyratory, 4-in. open setting, 125-hp. motor.

4. 1 @ 54-in.×42-ft. belt conveyor; Dings bipolar magnet.

5. 1 @ 11-roll grizzly, 2-in. aperture.

6. 1 @ 5 1/2-ft. standard cone, set 3/4-in., <1 1/2-in. product, 200-hp. motor, 200 t.p.h.

6a. 1 @ 4×10-ft. vibrating screen, 1-in. aperture.

7. 1 @ 72×24-in. A-C roll, 100 r.p.m., 2 @ 125-hp. motors, V-rope drive, product 40% >3/4-in.

7a. 1 @ 5 1/2-ft. short-head cone, 200-hp. motor.

7b. 1 vibrating screen, 3/8-in aperture.

8. 2 @ 1,500-ton concrete bins; reciprocating plate feeders, 3-in. stroke, 3-hp. motors; Blake-Denison weightometer.

9. 2 @ 11×7-ft. Ruwolt ball mills.

10. 2 @ 21-in.×41-ft. tubular conveyors with 3×3-in. longitudinal angles, set level, 7-ft. 2-tip scoops, 29 r.p.m., 15-hp. motors running full load.

11. 2 @ 16×26 2/3-ft. quadruplex rake classifiers. Sand load 123 t.p.h. ea.

12. 4 @ 6-in. Wilfley pumps (2 spares), Table 30; 1 @ 6-way weir-type distributor.

13. 6 @ 15(diam.)×8-ft. and 1 @ 21(diam.)×16-ft. bowl-rake classifiers.

14. 78% <200-m.; 2-way distributor.

15. 55 t.p.h. ea.

16. 3 @ 8×6-ft. and 2 @ 7×9-ft. grate-type ball mills.

17. 3 @ 8×26 2/3-ft. and 2 @ 6×23 1/3-ft. duplex rake classifiers.

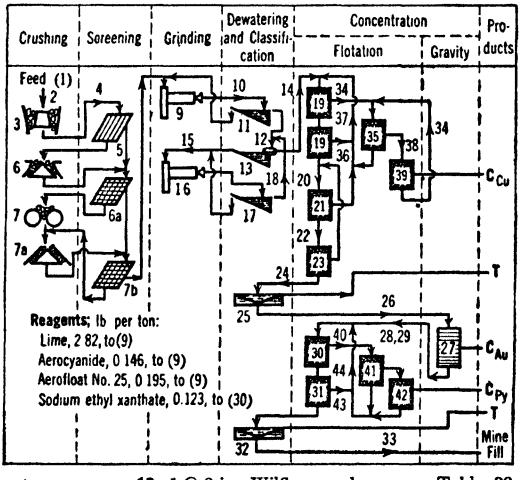

18. 1 @ 8-in. Wilfley sand pump. Table 30. A duplicate installation is in reserve.

19. 2 @ 60-ft. Lyell Forrester machines. Table 31.

20. 3 @ 6-in. Wilfley pumps, Table 30; 1 @ 2-way distributor.

21. 2 @ 60-ft. Lyell Forrester machines. Table 31.

22. 3 @ 6-in. Wilfley pumps, Table 30; 1 @ 2-way distributor.

23. 2 @ 60-ft. Lyell Forrester machines, Table 31.

24. Automatic tailing sampler, 1 cut per 7 1/2 min.; 1 @ 4×10-ft. punched-plate chip screen, 3/8-in. holes (chips to dump).

25. 1 @ 35(diam.)×7 1/4-ft. deslimer, 0.146 r.p.m., 4-hp. motor, 3,000 tons solid per 24 hr., spigot, 36.9% solids; overflow, 18.7% solids.

FIG. 33. MT. LYELL M. & R. CO.

Legend for Fig. 33—Continued:

26. 1 @ 6-in. Wilfley pump. Table 30.

27. 2 1/2×561-ft. strakes, bottom lined with 14-oz. Hessian, slope 1 in 33. Hessian is removed with concentrate biweekly and calcined in blast furnace. Sample strips yield 50 oz. per ton from head end, 1 oz. from tail end, 5 oz. average. Recovery about 4%.

28, 29. 1 @ 6-in. Wilfley pump. Table 30; 1 @ 4×10-ft. punched-plate chip screen 3/8-in. holes (chips to dump); 1 @ 20(diam.)×10-ft. agitator, 10 r.p.m., 7 1/2-hp. motor, 2,600 tons solid per 24 hr.; 1 @ 6-in. Wilfley pump (29); 1 @ 2-way distributor.

30, 31. 1 @ 60-ft. Lyell Forrester machine and 1 @ 10-cell 56-in. Fagergren machine (31) in parallel. Table 31.

32. 1 @ 20(diam.)×10-ft. deslimer and thickener.

33. 1 Dorrco pump; 1 @ 20(diam.)×10-ft. agitator.

34. First 30 ft. 1 @ 4-in. Hydroseal pump, Table 30.

35. 1 @ 30-ft. Lyell Forrester machine, Table 31.

36. Last 30 ft.

37. 1 @ 6-in. Wilfley pump, Table 30.

38. 1 @ 4-in. Hydroseal pump, Table 30.

Table 30. Pumps at Mt. Lyell

Reference No.	Lift, ft.	Tons solid per hr.	Speed, r.p.m.	Motor hp.
12	39	70	800	40
18	55	330	850	80
34	27	.....	725	10
38	27	.....	998	15
37	20	9	720	25
46	18.5	10 *a*	960	7
47	72 *b*	80	1,430	50
20	27	42	720	35
22	27	42	720	35
26	14.2	104	695	20
28	33	104	950	30
29	24	104	760	35
40	24	15	1,237	10
44	24	7	1,066	7.5
50	19	4	1,100	5
52	0	4	1,184	5
53	28	28	1,218	15

a Pulp. *b* 1,100 ft. horizontal distance.

Table 31. Flotation machines at Mt. Lyell

Reference No.	Per cent. solids in feed	pH	Time-factor, min.	Cu. ft. free air per min., ea.	Hp. consumed per machine
19	28	9.6	4.4	4,750	50
35	32	9.5	10.5	2,950	27
39	38	9.3	12.5	5,525	58
21	26.4	9.4	4.5	8,440	88
23	27	9.4	4.6	8,750	92
30	29	9.3	6	7,640	80
41	32	8.4	12	1,100	12
31	29	9.3	9	.....	100
42	24	8.1	12	1,100	12

39. 1 @ 20-ft. Lyell Forrester machine, Table 31.

40. First half. 2-in. Hydroseal pump, Table 30.

41. 1 @ 14-ft. Forrester machine, Table 31.

42. 1 @ 14-ft. Forrester machine, Table 31.

43. Second half.

44. 2-in. Hydroseal pump, Table 30.

Summary. Crushing from <30-in. to <3/4-in. in 3 stages (gyratory, cone, rolls) open-circuit. Grinding to flotation feed (73% <200-m.) in two stages in ball mills, each stage in closed circuit with individual rake classifiers, all rake-classifier overflows in closed circuit with bowl classifiers feeding sand to the secondary ball mills. All-flotation concentration, making first a differential copper concentrate with Aerofloat, using cyanide as a pyrite depressant, and thereafter desliming and floating pyritic sand with xanthate. Flow of flotation pulp in the copper section is by a 3-stage rougher-scavenger routing; first-stage concentrate is given two cleanings with the usual one-step counterflow of cleaner middlings. Flow in the pyrite section is one-stage rougher-scavenger routing with two-step cleaning of concentrate and both cleaner middlings returned to the rougher cell.

This plant demonstrates the penalty paid for a level-site mill with a complicated flowsheet in that the installed hp. for pumping is 3 hp-hr. per ton of original feed.

Outokumpu Oy. Fig. 34 (*Q* by E. Mäkinen; *19 MMt 85*)

Location: Outokumpu, Finland.

Ore, approximate composition: Chalcopyrite, 12%; pyrite, 30%; pyrrhotite, 15%; sphalerite, 1%, quartz, 40%, Au, 0.8 gm. per ton, Ag, 12 gm. per ton.

Capacity: 1,000 tons per 24 hr.

Assays: Feed: 4% Cu, 24% S, 42% insol.; Cu concentrate, 22% Cu; sulphur (pyrite-pyrrhotite) concentrate, 44% S; tailing, 0.35% Cu, 8% S with cell 12 (see flowsheet) not yet installed.

Recovery: 92% of Cu.

Ratio of concentration: 5.9 : 1, based on original feed and Cu concentrate.

Labor: Finnish. Tons per man-shift: operating, 20; repairs, 30.

Running time: 97%. Principal loss due to holidays and power interruptions.

Water: Pumped 2 mi. from a small lake. None re-used. CONSUMPTION 4 tons per ton of ore milled.

Building: Concrete. Floor slope in wet part, 2 in. per ft. Heated. Sloping site.

Machinery handling: Power crane.

Power: Hydroelectric (steam reserve); transmitted 200 mi. at 50,000 volts. Motors, 380-volt, 60-cycle CONSUMPTION, 29.8 hp-hr. per ton milled.

Transport: Railroad at property. Mill at mine. Mill to Cu smelter, 150 mi. Pyritic concentrate sold to paper-pulp mills; hauls 100 to 300 mi.

Tailing: Sand to mine fill; slime to lake.

Legend for Fig. 34:

1. Underground jaw crusher.

1a. In order: underground skip pockets; 2 ore-hoisting shafts; 2 parallel head-frame pockets.

2. 2 @ 24×12-in. Blake-type jaw crushers, 3-in. open settings.

3. Belt conveyor.

4. 2 @ 4-ft. standard cone crushers, set 1/2 in.

5. In order: belt conveyor; distributing conveyor with tripper; fine-ore storage bins, 4 compartments; 4 belt feeders.

6. 4 @ 6×6-ft. ball mills.

7. 2 @ 9 1/2(diam.)×12-ft. Noranda-type aerator classifiers. 45% solids; pH = 8.6 to 9.0; treatment time 20 to 30 min.; temp., 60° F.

8. 2 @ 6×6-ft. ball mills.

9. 3 centrifugal pumps in parallel.

10. 2 @ 3 1/2×60-ft. Forrester cells; air, 2 lb. per sq. in.; conc., 16% Cu.

11. 1 @ 3 1/2×33-ft. Forrester cell; assays, % S: feed, 22; conc., 44; tailing, 8.0.

12. 1 @ 3 1/2×33-ft. Forrester cell.

13. 1 @ 3 1/2×15-ft. Forrester cell; conc., 20% Cu; tailing, 5% Cu.

14. 1 @ 3 1/2×10-ft. Forrester cell; conc. 22% Cu.

15. Desliming classifier.

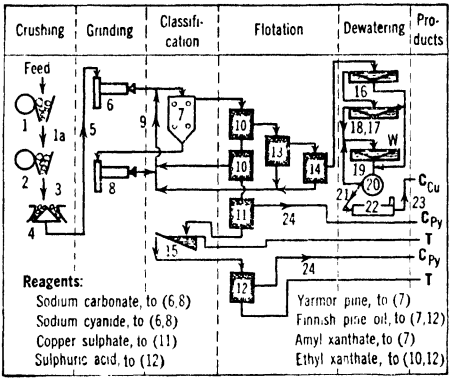

16. Thickener.

17. Thickener.

18. Pumps.

19. Thickener.

20. 3 drum filters, 10 sq. meters filtering area ea.

21. Belt conveyor.

22. Drier; discharge 5 to 10% moisture.

23. Conveyor.

24. Dewatering same as Cu.

FIG. 34. OUTOKUMPU OY.

Summary. Crushing from run-of-mine to <3/4-in. ball-mill feed in three stages comprising two jaw crushers and a cone in continuous open circuit. Grinding to 48 *mog* (54% <200-m.) by two-stage ball milling, the first stage open-circuit, the second in closed-circuit with an aerator classifier. All-flotation concentration with rougher-scavenger routing and two-stage cleaning in copper flotation, with regrind of all middling before counterflow to the rougher; two-stage roughing-out of pyritic concentrate with intermediate discard of slime tailing.

In so far as the bulk of the floatable mineral is concerned, this ore is similar to NORANDA, but the precious-metal values are much lower. Yet despite the smaller number of cells and shorter length of primary-pulp run at OUTOKUMPU, the total treatment time is substantially the same as at NORANDA.

Granby Consolidated M. S. & P. Co. Fig. 35 (*Tref 7/40; 129 J 176*).

Location: Allenby, B. C.

Ore: Bornite, chalcopyrite, chalcocite, and covellite, in an altered silicate gangue. Very hard and tough.

Capacity: 4,500 tons per 24 hr.

Assays and recoveries: See Table 32.

Table 32. Assays at Granby Consolidated

Material	Assays				
	Oz. per ton		Per cent		
	Au	Ag	Cu	Fe	Insol.
Feed	0.011	0.242	1.34	5.2	75
Concentrate	0.225	4.55	30.05	14.0	32
Tailing	0.002	0.056	0.20	4.5	78
Recovery, %	82.5	78.0	85.7	.....	.....

Ratio of concentration: 26.2 : 1.

Water: Pumped from Similkameen River, 540-ft. lift, 1-mi. line; gross CONSUMPTION, 2.75 tons per ton of ore, 34% reclaimed at mill.

Power: Company steam-turbine generators, using coal fuel, 2 mi. distant. Transmitted at 13,800 volts. Motors, 2,200-volt large and 440-volt small. CONSUMPTION: coarse crushing, 2.0 hp-hr. per ton; secondary crushing, 8.0; grinding, 21.0; flotation, 6.0; water and miscellaneous, 5.0; total, 42 hp-hr. per ton.

Costs: Coarse crushing, 6.4¢ per ton; secondary crushing, 10.7; grinding, 13.3; flotation, 8.3; concentrate handling, 1.4; repairs and maintenance, 2.4; general, 10.3; total, 52.8¢ per ton.

Legend for Fig. 35:

1. 1 @ 1,650-ton bin for mine ore requiring sorting.

2. Grizzly, 1/2-in. spacing.

3. 1 @ 30×42-in. jaw crusher.

4. Grizzly, 1/2-in. spacing.

5. 1 @ 42-in. sorting conveyor, waste removed; 1 @ 42-in. conveyor with suspended magnet.

6. 1 @ 7-ft. standard cone, 1 1/2-in. set.

7. Higher-grade ore to 1 @ 450-ton bin.

8. 1 @ 30×42-in. jaw crusher in parallel with (3).

9. 1 @ 1/2-in. grizzly in parallel with (4).

10. Oversize of (9).

11. Undersize of (9).

12. 1 @ 30-in. conveyor; 1 shuttle conveyor; loading bins; 60-ton cars 8 1/2-mi.; 2,500-ton bin at Allenby; 2% >3-in., 11% <1/2-in.

13. 24-in. conveyor.

14. 1 @ 4×6-ft. 2-deck Ty-rock screen, 2 1/4-in. and 5/8-in. apertures.

15. 1 @ 36-in. Telsmith Gyrasphere crusher.

16. 1 @ 72×20-in. roll.

17. Conveyors.

18. Stationary screen, 1 1/4-in. sq. aperture.

19. 1 @ 72×20-in. roll.

20. Conveyors.

21. 5 @ 4×5-ft. Hum-mer screens, 1 @ 3×4-ft. impact screen.

22. 2 @ 54×20-in. rolls.

23. 7 @ 4×5-ft. Hum-mer and 3×4-ft. impact screens.

24. Conveyors; 2,700-ton ore bin; 8 conveyors. 4% >8-m., 14% <200-m.

25. 4 @ 7×10-ft. ball mills, 3-in. white-iron wave-type liners, 23 r.p.m., 200-hp. motors, 71% solids, white-iron ball CONSUMPTION about 1 lb. per ton, liners last about 1 yr.

26. 4 @ 8×25-ft. rake classifiers; overflow, 41% solids, 16% >65-m., 48% <200-m.

27. 4 @ 7 1/2×25-ft. rake classifiers; operating as (26).

28. 4 @ 7×10-ft. ball mills, operating as (25).

29. 5 @ 8×30-ft. and 1 @ 6×28-ft. rake classifiers; overflow, 22% solids, 3% >65-m., 61% <200-m.

30. 6 @ 5×20-ft. tube mills, 22 r.p.m., 150-hp. motors; 3-in. white-iron wave-type liners, LIFE 2 yr.; 2-in. white-iron balls, about 1 lb. per ton; 70% solids.

31. 4 @ 4-cell No. 30 Denver Sub-A machines in parallel; 4 min. flotation time; 50 to 55% recovery; rough concentrate, 12% Cu, middling, 4% Cu. (*a*) = first two cells; (*b*) = final two cells.

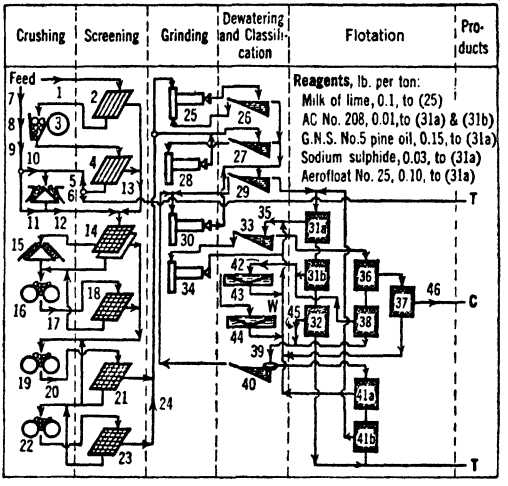

32. 8 @ 18-ft. pneumatic cells in parallel, 275 cu. ft. volume each, 72 cu. ft. free air per min. each per lin. ft. at 1.8 lb. per sq. in.; concentrate, 2.5% Cu; tailing, 0.20% Cu.

33. 1 @ 20-ft. bowl-rake and 2 @ 6×28-ft. rake classifiers; overflow, 29% solids, 4% >150-m., 60% <325-m., 6% Cu. Sands, 610 tons per 24 hr.

34. 1 @ 7×10-ft. ball mill, 23 r.p.m., 1 3/8-in. balls.

35. 2 @ 4-in. Wilfley pumps.

36. 1 @ 4-cell No. 30 Denver Sub-A flotation machine, 4 min. contact; concentrate, 42% solids, 20% Cu; tailing, 3.2% Cu.

37. 1 @ 4-cell No. 24 Denver Sub-A flotation machine; feed, 20% solids; tailing, 6% Cu; concentrate, 12% >200-m., 73% <325-m., 30% Cu.

38. 1 @ 24-ft. pneumatic cell, 1,400 t.p.d.

39. 2 @ 6-in. Wilfley pumps.

40. 1 @ 18-ft. bowl-rake classifier.

41. 7 @ 18-ft. air cells in parallel.

42. 2 Hydroseal pumps.

43. 1 @ 40-ft. thickener; feed, 800 tons per day; overflow 5% solids, 2.6% >150-m., 87% <325-m., 4.4% Cu.

44. As (43). Underflow 43 and 44, 9% >150-m., 52% <325-m., 4.6% Cu, 52% solids.

45. 1 @ 6-in. Wilfley pump. Part split through a 20-ft. Denver thickener sending spigot to (30) and overflow to reclaimed water.

46. 2 @ 40-ft. thickeners and 2 @ 6-ft. disk filters.

FIG. 35. CRANBY CONSOLIDATED M. S. & P. Co.

Summary. Six-stage crushing to 4% >8-m.; 2-stage closed-circuit grinding to 3% >65-m. flotation feed and 1-stage regrind of rough concentrate; all-flotation concentration with 1-stage roughing and 2-stage scavenging on the primary flow; regrind of rough concentrate before 2-step cleaning, making slime tailing on the primary-cleaner stream with regrind of primary cleaner sands before counterflow to the rougher.

Crushing costs run almost double the average in copper plants, while grinding costs are about 25% less than average, but this saving is effected by sending a relatively coarse feed to primary flotation and making a relatively high tailing in probable consequence. Total cost is about average.

Mount Morgan, Ltd., Sulphide plant. Fig. 36 (B. W. Lennon, Mill Sup't, *115 Aa 313*).

Location: Mount Morgan, Queensland.

Ore: Chalcopyrite in a pyrite-quartz gangue, with 0.15 to 0.23 oz. Au. Pyrite 25 to 50%. The ore comprises an acidic slime portion, high in cyanicides, the gold and copper contents of which range from 1 1/2 to 2 times those of the granular portion.

Capacity: 1,500 tons per 24 hr.

Assays: See Table 33.

Recovery: See Table 33.

Ratio of concentration: 30 : 1.

[General data continued on p. 65.]

Table 33. Flotation results at Mt. Morgan

Quantities	Slime			Granular			Combined roughing			Cleaning		
	Feed	Conc.	Tail.	Feed	Conc.	Tail.	Feed	Conc.	Tail.	Conc.*a*	Conc.*b*	Tail.
Tons	250	35	215	1,250	40	1,210	1,500	75	1,425	25	20	30
Assays												
Au, dwt.	4.5	21.0	1.8	3.3	67.0	1.2	3.5	45.5	1.3	86	50	8.8
Cu, %	1.0	6.0	0.18	0.70	19.4	0.08	0.75	13.2	0.1	25	15	2.1
Recovery, %												
Au	.....	65.3	.....	.....	65	.....	.....	65	.....	63	29.3	.....
Cu	.....	84	.....	.....	89	.....	.....	88	.....	63.3	30.3	.....
Ratio of concentration	..	7	..	..	31	..	..	20	..	30	3.75	.....

a Primary. *b* Secondary.

Sizing-assay tests (115 *Aa* 357) showed maximum gold losses in the finest elutriated product (<10 or 20-μ) and next greatest in the >100-m. Super-panner tests, supplemented by microscopic examination, showed gold ranging in size from 5×6-μ to 17×30-μ, part clean, part coated with iron oxide, and part locked in quartz and in pyrite in both the slime- and sand-plant tailings.

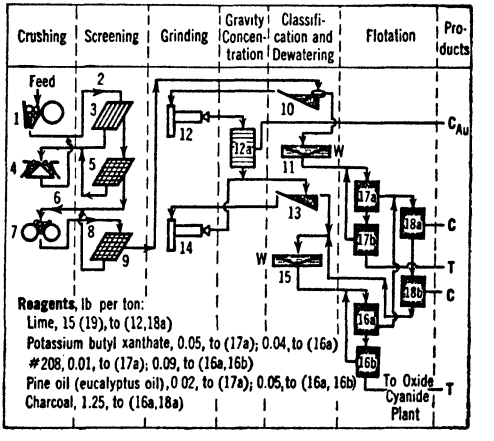

Legend for Fig. 36:

1. 3 jaw crushers, at 450-, 574- and 650-ft. levels, 5-in. open settings.

2. Underground ore pockets; 5-ton skips; 3,000-ton wooden bin at collar; 6 reciprocating adjustable-stroke feeders; 3 @ 30-in. conveyors in series; magnetic head pulley and suspended magnet.

3. 1 @ 5-bar finger grizzly, 5-in. clear spacing, 25 r.p.m.

4. 1 @ 5 1/2-ft. cone crusher, 200-hp. motor, 120 t.p.h.

5. 2 @ 4×8-ft. vibrating screens, 28° slope, 600 s.p.m., 1×6-in. aperture, 1/2-in. welded-rod screen.

6. 3 @ 26-in. conveyors in series from shaft-house crusher to mill storage; 2,000-ton fine-ore bin (alternatively from the conveyor preceding the bin to a stockpile conveyor, to a stockpile 180×75 ft.×40 ft. high, thence by a tunnel conveyor to the bin-feed conveyor); 3 shaking feeders, 1 push-type feeder.

7. 4 @ 36×18-in. slow-speed (18 to 19 r.p.m.) gear-driven rolls, one flanged and driven, the follower plain.

8. 4 bucket elevators, 18-in. belt, 16-in. buckets spaced 15 in.

9. 7 @ 4×8-ft. Leahy screens, 3/16-in. square or 3/16×3/4-in. rectangular welded-wire cloth.

10. 2 @ 16(diam.)×8×32-ft. duplex bowl-rake classifiers, 2 1/2-in. slope per ft.; r.p.m. bowl rake = 1.25, sand rakes 18 s.p.m.; overflow 12% solids; sand contains <1% slime.

11. 3 @ 40-ft. and 1 @ 24-ft. thickeners; spigot 22% solids.

12. 2 @ 5 1/2×11-ft. ball mills (as 14).

12a. Strakes.

13. 6 @ 8×28-ft. rake classifiers; overflow, 30 to 32% solids; 55 to 60% <200-m.; slope, 2 1/2 to 3 1/4 in. per ft.

14. 6 @ 5 1/2×11-ft. grate-type ball mills (only 4 in use at normal 1,500-ton per day capacity); 80% solids; manganese-steel El Oro type liners, LIFE, 6 mo. end, 12 mo. shell; 14 tons 2 1/2-in. cast alloy balls, 5-lb. per ton; 26 r.p.m.; 150-hp. motors.

15. 1 @ 40-ft. and 2 @ 24-ft. thickeners.

16. 2 @ 14-cell Mt. Morgan-type M-S subaeration machines and one bank of 12 @ 44-in. Fagergren cells (660 r.p.m.), comprising 3 sections; (*a*) 1 to 4 cells of each bank making rough concentrate. Feed about 1,250 tons per 24 hr. See Table 33 for performances.

17. 28 M-S subaeration machines in series. See Table 33 for performances. (*a*) 1 to 4 cells.

18. 4 M-S subaeration machines; (*a*) cell 1 ± cell 2; (*b*) cells 3 and 4 ± cell 2. Cell 2 is switched, according to smelter requirements and assays of the concentrates, from (*a*) and (*b*).

19. Separate treatment of slime has reduced lime consumption from 45 lb. per ton of crude.

FIG. 36. MT. MORGAN, sulphide plant.

Power consumed: 29.3 hp-hr. per ton.
Running time: 94.4%; excluding holidays and causes outside of the mill, the figure is 99.6%.
Costs: (Labor at $18 per 40-hr. week.) Coarse crushing, $0.06; fine crushing, 0.10; grinding, 0.30; flotation, 0.33; concentrate handling, 0.06; tailing disposal, 0.06; superintendence and overhead 0.26; total, $1.17 per ton. (1939, $0.99 per ton, *32 CEMR 108.*)

Summary. Three-stage crushing from run-of-mine to <3/16-in.; 2-stage grinding in ball mills, the first in open circuit, with a strake between stages. All-flotation concentration with separate rougher treatment of primary slime, both rougher circuits having simple rougher-scavenger routings, with one cleaning of combined primary concentrates in 2 stages to permit 2 grades of final concentrate; cleaner tailing returned to the clean-ore rougher circuit via dewatering.

Noranda Mines, Ltd. Fig. 37 (*Q* by C. G. McLachlan, Concentrator Sup't, and W. B. Boggs, Smelter Sup't; *112 A 570*).

Location: Noranda, Que., Canada.
Ore: Chalcopyrite, 4 to 8%; pyrite, 20 to 30%; pyrrhotite, 50 to 60%; Au, 0.12 to 0.20 oz. per ton, Ag, 0.20 to 0.30 oz. per ton; insol., 15 to 20%.
Capacity: 3,000 to 3,200 tons per 24 hr.
Assays: Feed, see *Ore* above; concentrate, see Table 34, item 61; tailing, see Table 34, items 44 and 45, 62, and 41.

Table 34. Assays of products at Noranda

Product		Assays			
Character	Reference No.	Cu, %	Au, oz. per ton	Ag, oz. per ton	Pyrite, %
Primary Cu-Au conc.	20 & 33	9.6	0.79	.....	.....
Primary pyrite conc.	53	1.4	0.28	.....	85
Pyrite re-treatment conc.	38 & 39	6.9	0.98	.....	.....
Primary pyrite flotation tailing.	44 & 45	0.08	0.03	.....	2.7
Cyanide tailing.	62	0.11	0.03	.....	.....
Cyanide feed.	57	0.11	0.12	.....	.....
Copper flotation circuit tailing.	25	0.33	0.08	.....	17.2
Pyrrhotite flotation circuit tailing.	41	0.06	0.012 to 0.018	.....	.....
Over-all conc.	61	9.1	0.82	1.07	.....

Recovery: Cu, 96 to 96.5%; Au, 85 to 90%.
Ratio of concentration: 6 to 8 : 1.
Labor: Canadian. Tons per man-shift: operating. 48; repairs, 375; including cyanidation but not coarse and intermediate crushing.
Running time: 97.6%. Principal causes of loss: ball-mill repairs, 1.1%; electrical, 0.5%; general mill shutdowns, 0.5%.
Water pumped 2 mi. through wood-stave pipe from a lake at a consumption of 145 hp. CONSUMPTION is 2 to 2.4 tons per ton of ore with less than 2% re-used.
Building: Steel frame with brick walls; concrete floors, slope in wet part, 1/4 in. per ft., which is insufficient; heated; level site.
Machinery handling: Power cranes throughout.
Power, purchased, transmitted 55 mi. at 110,000 volts; motors, 550-volt, 25-cycle; 33.6 hp-hr. per ton of ore milled.
Transport: Railroad at plant; ore comes by belt conveyor from mine shaft to mill; concentrate, 550 ft. by conveyor to smelter.
Tailing is pumped 3/4 mi. through 9-in. wood-stave pipe to usual type of tailing dam.

Summary. Crushing from 36-in. run-of-mine to <3/16-in. ball-mill feed size in four stages comprising a jaw crusher, standard cone and short-head cone in series, open-circuit, followed by rolls in closed circuit. Grinding to 48 *mog* (48% <200-m.) primary flotation feed in two ball-mill stages, the first open-, the second closed-circuit, with three subsequent stages of tailing regrind, and one stage of middling regrind, each followed by further flotation stages. Substantially all-flotation concentration, with provision for sending the main pulp stream over blanket strakes at a point about halfway through the primary run and at the end thereof, if desired. Pyritic sand tailing from one of the side streams goes to cyanidation (see below). There are nine flotation stages on the primary pulp stream, divided by two regrind steps into three groups of three stages each. Finished concentrate is taken from the first cell in each group, the remaining two cells of the group furnish one side stream for cleaning and one scavenger for recycle through a grinding circuit to the head of

Legend for Fig. 37:

1. By mine cars and underground ore pocket.

2. 1 @ 36×48-in. jaw crusher, 8-in. open setting; a crusher for flux and for concentrating ore is on the 12th level, one for smelting ore on the 24th level; one for Powell ore, to which the ore is brought in trucks, on the surface, fed by bin, which receives Powell ore transported by truck.

3. Underground skip-loading pocket, shaft, surface ore pocket.

4. 1 @ 4×6-ft. 2-deck Niagara screen, 3×3- and 1×2-in. holes.

5. 15-ton surge bin.

6. 1 @ 7-ft. standard cone crusher, 1 1/4-in. set, Granby-type bowl.

7. 1 @ 5×8-ft. 2-deck Niagara screen, 7/8×2- and 3/8×4-in. screens.

8. 100-ton surge bin.

9. 1 @ 7-ft. short-head cone, 1/4-in. set.

10. 100-ton surge bin.

11. 1 @ 78×20-in. rolls, 3/16-in. set.

12. 75-ton surge bin.

13. 8 Dillon screens, 3/16×2-in. holes.

14. Sampling system. (Flow to this point is substantially the same for smelting ore, concentrating ore, and flux. Different primary crushers are used as noted above (2). Screening and intermediate crushing equipment comprise the identical machines for all three materials, which are fed through at different times.) 3,600-ton mill bins, see Table 35; 3 weightometers.

15. 3 @ 7×12-ft. ball mills.

16. 2 @ 31×38-in. trommels, 1/4-in holes.

17. 1 @ 4 1/2×6-ft. ball mill for additional grind on tough, siliceous material.

18. 1 @ 13×15-ft. aerating classifier. A 14×15-ft. machine is in reserve. See Table 35. 3,000 tons solid overflow per 24 hr.

19. 3 @ 7×12-ft. ball mills.

20. 4 @ 15-ft. MacIntosh cells *a* in parallel. *b* See Tables 34 and 35. Together with (33) these cells make 325 tons concentrate per 24 hr.

21. 4 @ 10-ft. cells.

22. 4 @ 10-ft. cells.

23. 2 @ 15-ft. cells.

24. 4 @ 10-ft. cells. 75 tons solid overflow per 24 hr.

25. 4 @ 10-ft. cells. See Tables 34 and 36. 2,600 tons solid tailing per 24 hr.

26. 4 @ 15 ft. and 2 @ 10-ft. cells.

27. 6 @ 10-ft. cells.

28. 6 @ 10-ft. cells.

a All flotation cells are MacIntosh.

b All groups of cells hereinafter noted are to be read in parallel.

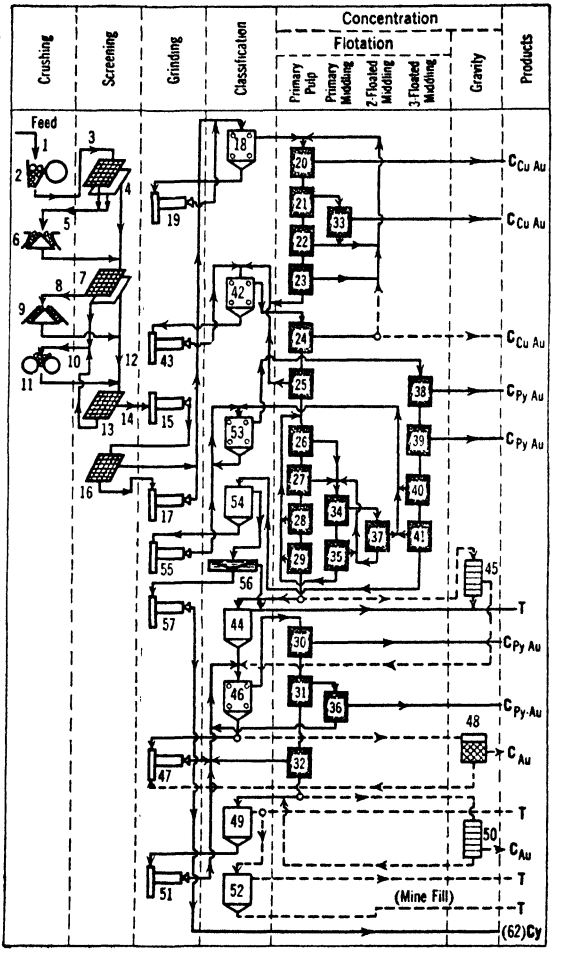

29. 4 @ 15-ft. cells.

30. 4 @ 15-ft. cells.

31. 4 @ 15-ft. cells.

32. 2 @ 15-ft. cells.

33. 1 @ 10-ft. cell.

34. 4 @ 14-ft. cells.

35. 2 @ 14-ft. cells.

36. 1 @ 10-ft. cell.

37. 4 @ 14-ft. cells.

38. 4 @ 15-ft. cells. See Table 34. With (39) makes 80 tons solid per 24 hr. in froth.

39. 4 @ 10-ft. cells. See Table 34.

40. 4 @ 10-ft. cells.

41. 2 @ 15-ft. cells. See Tables 34 and 36.

42. 1 @ 16×15-ft. aerating classifier. Overflow, 2,675 tons solid per 24 hr.

43. 2 @ 7×12-ft. ball mills.

44. 1 @ 16 1/4-ft. Noranda-type classifier. See also Table 34. Overflow, 700 tons solid per 24 hr.; spigot, 1,400 tons.

45. 2 @ 50-in.×90-ft. blanket launders in parallel. See Table 34.

FIG. 37. NORANDA MINES, LTD.

Legend for Fig. 37—Continued:

46. 1 @ 16×15-ft. aerator classifier.
47. 2 @ 5×14-ft. ball mills.
48. Denver mineral jig.

Table 35. Screen tests on Noranda products

Mesh	Per cent. weight retained		
	14	18	20, 33, 24
	Primary ball-mill feed	Product secondary grinding circuit	Cu-Au conc.
6	18.1	.....	.....
8	14.3	.....	.....
10	10.5	.....	.....
20	16.8	.....	.....
48	14.7	.....	.....
65	.....	7.3	.....
100	8.1	13.9	.....
150	.....	16.3	7.3
200	5.5	14.6	7.6
<200	12.0	47.9	85.1

49. 1 @ 17 1/2-ft. Noranda-type classifier.
50. 1 @ 50-in.×24-ft. blanket launder.
51. 1 @ 5×14-in., 1 @ 6 1/4×14-ft. ball mill.
52. 1 @ 12-ft. Noranda-type classifier.
53. 1 @ 16×15-ft. aerator classifier. See Table 34. Overflow, 500 tons solid per 24 hr.
54. 1 @ 13-ft. Noranda-type classifier.
55. 1 @ 8×12-ft. ball mill.
56. 2 @ 31-ft. thickeners.
57. 1 @ 7×14-ft. ball mill.
58. 1 @ 14-ft., 1 @ 17-ft. thickener.

Table 36. Infrasizing of Noranda products

Micron range	Per cent. weight			
	25	41	62	61
	Copper flotation circuit tailing	Pyrrhotite flotation circuit tailing	Cyanide tailing	Over-all concentrate
0–10	15.5	14.4	23.0	22.5
10–14	5.7	5.7	8.3	6.8
14–20	7.3	10.3	11.8	9.0
20–28	8.4	16.2	15.1	10.5
28–40	10.1	8.6	20.3	12.7
40–56	13.7	21.7	19.1	15.0
56–80	20.3	18.6	2.3	14.5
>80	19.0	4.6	0.1	9.0

59. 2 @ 23-ft. and 2 @ 34-ft. thickeners.
60. 1 @ 23-ft. thickener.
61. 2 @ 8×8-ft. Oliver and 1 @ 8×8-ft. Feinc filters active. 2 @ 5 1/4×8-ft. Oliver spares. See also Tables 34 and 36. Cake moisture, 11.3%.
62. Makes precipitate and tailing. See also Tables 34 and 36.

its respective group. Primary cleaning makes finished concentrate in groups 1 and 3. Primary-cleaner tailings return to the main pulp stream in the group from which they were drawn, being reground in groups 1 and 3 but not in 2. In group 2 primary-cleaner sidestream is recleaned twice; secondary-cleaner tailing returns to the primary cleaner circuit the tertiary-cleaner circuit follows a rougher-scavenger routing with open-circuit regrind and recycle of the sand tailing within the circuit. The sand portion of the tailing discharge from this circuit goes to cyanidation.

Maintenance of a reasonably oxidizing condition in the pulp, which is essential to speed and completeness of flotation, is one of the principal difficulties with this massive-sulphide highly pyrrhotitic ore. Hence an aerating step precedes each section of the flotation on the primary pulp stream and, as well, the middling re-run on pyrite cleaning.

Tennessee Copper Co. Fig. 38 (*Q; 138 #10 J 40; 153 A 345*).

Location: Copperhill, Tenn.

Ore: Massive sulphide; chalcopyrite, pyrrhotite, pyrite, marmatite, sphalerite, and small amounts of silicates and carbonates

Capacity: 1,200 tons per 24 hr.

Assays: Feed: Cu, 1.5%; Fe, 27%; Zn, 1.0%; S, 19%; copper concentrate: Cu, 20%; iron concentrate, 53.5% Fe; zinc concentrate, 49% Zn.

Recoveries: Cu, 92%; Fe, 71%; Zn, 45%.

Ratios of concentration: Cu, 16.0 : 1; Fe, 2.7 : 1; Zn, 100 : 1.

Power: Purchased; comes 25 mi. at 66,000 volts; motors, 2,300- and 220-volt, 60-cycle. CONSUMPTION: 22 hp-hr. per ton milled.

Water from neighboring streams; pumped 1.5 mi. with power consumption amounting to 2 hp-hr. per ton of ore; CONSUMPTION, 3 1/2 tons per ton of ore, none re-used.

Labor: American; tons per man-shift: operating, 103; repairs, 86.8; total, 47.5.

Running time: 93.2%.

Mill building: Slightly sloping site; steel frame covered with sheet iron; operating floors wood, slope 1/2 in. per ft. in wet part. Heated. Power crane in coarse crushing; chain blocks in fine crushing; power crane and chain blocks in concentrator.

Transportation: 1 1/2 mi. mine to mill by standard-gage railroad; 4 mi. from mill to copper smelter and acid plant; zinc concentrate shipped away.

Tailing disposal by gravity flow to a tailing dam.

Legend for Fig. 38:

1. Jaw crusher, 3-in. open setting.
2. Screen.
3. Symons disk crusher, 1/2-in. set.
4. Bin.
5. 1 @ 6×12-ft. rod mill.
6. 2 duplex rake classifiers.
7. 2 ball mills.
8. 1 @ 2 1/2×5×64-ft. Hunt cell; 1 Hunt scavenger cell; 100 c.f.m. per ft.; 1.24 hp. per ft.; 56 to 80° F.; 8 min. time-factor; 31% solids; *p*H = 6.7; tailing, 0.08%.
9. Conditioner. Cu, 0.8% Fe, 0.6% Zn, 2.8% S.
10. 4 @ 56-in. Fagergren cells, 600 r.p.m.; rubber-covered impellers last 400 da.; 7 1/4 hp. per cell; 4 min. time-factor; 25% solids, *p*H, 7.3; 10 t.p.d. conc., 25% Zn; tailing 0.15% Zn. *b*
11. Hunt air-lift machine; conc., 500 t.p.d., 2.8% Cu, 51% Fe, 40% S, 1.2% Zn. *b*
12. Bowl-rake classifier.
13. 1 @ 5-ft. Hardinge ball mill.
14. Denver conditioner.
15. 1 @ 17-cell 24-in. M-S subaeration machine, 235 r.p.m., cast-iron impellers last 600 da.; air pressure 2 p.s.i., consumption 25 c.f.m. per cell, 4.4 hp. per cell including air; 45 min. time-factor, 37% solids, *p*H 10.7; 100 tons concentrate, 14% Cu. *b*
16. 1-cell 24-in. Denver Sub-A machine *a*; 100 t.p.d. feed. *b*
17. 1 @ 6-cell 24-in. Denver Sub-A machine. *a, b*
18. 1 Hunt air-lift machine. *b*
19. 3 thickeners in parallel.
20. 1 @ 8-cell 24-in. M-S subaeration machine; 235 r.p.m., air pressure 2 p.s.i., 15 c.f.m. per cell, 4.3 hp. per cell including air; 38% solids, *p*H 11.0; 430 t.p.d. feed; 20 t.p.d. concentrate, 23% Zn. *b*

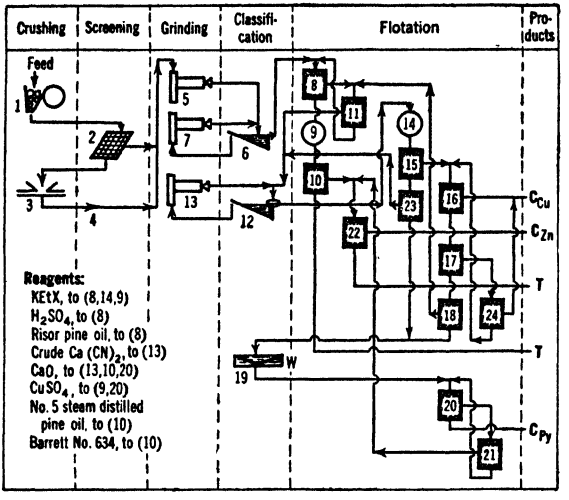

21. 1 @ 4-cell 24-in. M-S subaeration machine; operating data as for (20). *b*
22. 1 @ 12-cell 12-in. M-S subaeration machine; 458 r.p.m., cast impellers last 2,000 da.; 10 c.f.m. air at 2 p.s.i.; 30% solids, *p*H, 11.3; 12 t.p.d. concentrate, 49% Zn. *b*
23. 1 @ 12-cell M-S subaeration machine; operating data as for (16). *b*
24. 1 @ 3-cell 24-in. Denver Sub-A machine. *a, b*

a Comprising 1 @ 10-cell machine, 295 r.p.m.; cast impellers last 1,000 da.; 4 hp. per cell, 45 min. total time-factor, 20% solids, *p*H = 8.6; combined concentrate from (16) and (24), 70 t.p.d., 20% Cu.

b For discussion of reasons underlying choice of these various machines see *A TP 1680*.

FIG. 38. TENNESSEE COPPER CO.

Summary. Two-stage crushing; 1-stage open-circuit rod milling and 1-stage closed-circuit ball milling to flotation-feed size; all-flotation concentration making a bulk copper-iron concentrate and a rough zinc concentrate on the primary run; bulk concentrate cleaned, reground, and refloated to depress zinc and iron; copper float refloated in 3 steps, making finished copper concentrate in the first, middling for recleaning in the second, and middling for recirculation to the primary grinding circuit in the third. Depressed zinc-iron reactivated with copper sulphate, iron further depressed by lime, and a finished iron concentrate made by floating away a rough zinc concentrate which is recleaned twice.

Ohio Copper Co. Fig. 39 (*Tref 6/41*).

Location: Lark, Utah.
Ore: Tailing from gravity concentration; sulphide and soluble copper minerals.
Capacity: 1,000 t.p.d.
Assays: See Table 37.
Recovery: See Table 37.
Ratio of concentration: 63 : 1.
Water: From mine; slightly acid and contains soluble salts, but is not corrosive. CONSUMPTION, 2.3 tons per ton of ore; none reclaimed.
Running time: 99%, Sept. 1940.
Tailing flows by gravity to ponds behind dams constructed by dragline during summer and fall.
Costs, cents per ton (Sept. 1940): Sluicing, 5.3; milling: labor and insurance 4.4, power 5.6, reagents 4.0, iron 2.5, other supplies 1.7, total 18.2; mill maintenance, 3.2; tailing disposal, 2.0; operating overhead, 1.9; total, 30.7; equivalent to 4.4¢ per lb. of copper recovered.

Legend for Fig. 39:

1. 2 monitors, 7/8-in. nozzles, 70 to 90 lb. per sq. in.; pit launders, 2 1/2% grade; wooden grid, 1-in. spacing; wooden sump; 6-in. Hydroseal pump, rubber lined; life of rubber-covered impellers and rubber bell liners, 10 mo.; rubber shell liners, 5 mo.; 5 1/2-in. wood pipe 3/4 mi. to mill; surge tank with orifice discharge; sampler.

2. 1 @ 4×7-ft. trommel, 16-m. stainless-steel cloth; trommel frame of Everdur, rubber, and stainless steel.

3. 1 @ 6-in. Hydroseal pump as in (1). Pulp about 30% solids.

4. 3 @ 10×10-ft. rubber-lined wood-stave concrete-bottom Devereaux tanks in series; rubber-covered ship-type impellers (LIFE, 18 mo.). Rubber-covered wood well (LIFE, 4 to 6 mo.). About 5 lb. per ton of ore of 60° Bé H_2SO_4 added to first tank, to maintain 0.5 to 1 lb. of free acidity in solution at the outlet of the third tank. Contact time, 30 min. About 1 lb. Cu per ton of ore is dissolved by the acid.

5. 3 @ 6×6-ft. rubber-lined wood-stave (fir, LIFE 3 yr.) Devereaux tanks, with 32-in.-diam. rubber-covered wood center wells (LIFE, 6 mo.), in series. 30-in. 4-blade cast-iron ship-type impellers driven 250 r.p.m. by 15-hp. motors; life 12 to 15 da. Shredded tin cans (pieces about 4 in. square) not detinned added to agitators in an amount equivalent to about 0.6 ton of iron per ton of solids (ratio of iron to solution maintained about 1 : 4 by weight; better rate of precipitation and lower soluble-copper tailing obtainable at ratio of 1 : 2, but this is not possible mechanically in the existing arrangement). Contact time, 5 min.; 82% precipitation of dissolved Cu; loss dissolved Cu per ton of ore, 0.22 lb. (see Fig. 40); about 50% of dissolved Cu precipitated in first tank, 25% in second, 5% in third. Iron consumption about 2.5 lb. per lb. of Cu precipitated. Punched-copper plate screens between precipitators.

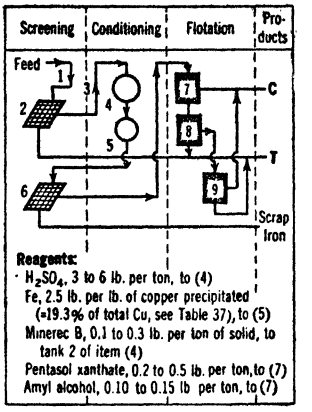

6. 1 @ 36-in. trommel with copper covering, 0.5-in. aperture.

7. Cells 1 of 3 @ 8-cell 41 1/2-in. Denver Sub-A flotation machines in parallel; *p*H about 4.7; recovery drops if *p*H rises above 5.3. All cells of wood, rubber-lined; impellers, wearing plates and lower end of shaft rubber-covered. Life of impellers 10 mo. in No. 1 cell of roughers; 18 mo. in No. 8 cell of scavenger; about twice these figures in cleaners. Life of wear plates: 9 mo. in cells 1 of roughers; 24 mo. in cells 8 of scavengers.

8. Cells 2 to 8 of (7).

9. 1 @ 8-cell 41 1/2-in. Denver Sub-A flotation as (7).

FIG. 39. OHIO COPPER CO.

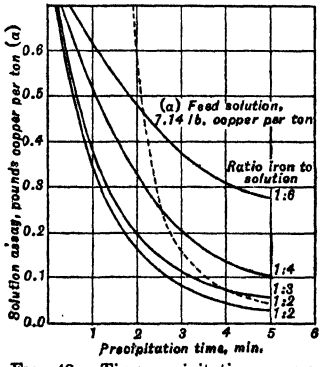

FIG. 40. Time-precipitation curves at OHIO COPPER CO.

Table 37. Metallurgical data, Ohio Copper Co.

Item	Assay, % Cu	% of total Cu
Feed.....	0.48	100.0 *a*
Concentrate...	22.56	74.2
Tailing.....	0.13	25.8 *b*

a 13.5% water-soluble; 19.3% water- and acid-soluble; 84.4% of soluble copper precipitates as cement copper.

b About 65% of tailing loss is in rougher tailing; more than half of this is oxidized. Cleaner tailing assays consistently 0.4 to 0.6% Cu irrespective of grade of feed to cleaners; hence scavenger concentrate is kept of as high grade as possible (about 8% Cu) in order to reduce tonnage of cleaner tailing.

Summary. Scalping waste at 16-m.; leaching with dilute acid; precipitating cement copper *in the pulp* with scrap iron; floating sulphides and cement copper together by a rougher-scavenger flow with one-stage cleaning of scavenger concentrate and discard of cleaner tailing.

17. GALLIUM

Uses. Dental alloys; backing of optical mirrors; filling for quartz-tube thermometers for temperatures up to 1,000° C., for which purpose the Ga must be exceptionally free from oxide and impurities, especially Zn and As. Ga-Cd and Ga-Zn alloys have proved useful in manufacture of vacuum and metal-vapor lamps.

Occurrence. A frequent accessory in zinc sulphide and oxidised ores; certain blende concentrates from the Tri-State district are estimated to contain 3 to 5 oz. Ga per ton.

Gallium tends to concentrate in the nonvolatile residue of zinc redistillation retorts, in which the temperature (1,000° C.) is about 350° lower than usually prevails in the primary ore retorts. Unlike germanium (Art. 18), gallium in usual proportions introduces no particular difficulty in electrolysis of zinc from sulphate solution; hence any output of gallium is more likely to come from retort smelters.

Production. Germany has been reported (1938) as producing about 50 kg. of gallium per year, for sale at 10 Rm. per gram.

Treatment. See under *Occurrence.*

18. GERMANIUM

Uses. No outstanding uses yet discovered. Addition of 1.2 to 1.6% Ge to Duralumin and similar alloys is reported to improve strength and rolling properties; a German patent covers Al-Mg-Ge alloy (up to 5% Ge). On substituting GeO_2 for SiO_2, four types of glass were found to have wider dispersion and higher refraction than SiO_2 glass; hardness was the same, but melting point was lower, density greater, and coefficient of thermal expansion higher.

Occurrence. Three minerals (all scarce) contain notable proportions of Ge: argyrodite ($3Ag_2S \cdot GeS_2$) with 5 to 7% Ge, found at Freiberg, Saxony, and Ormo, Bolivia; canfieldite (similar composition) found in Bolivia; germanite, Ge up to 6.2 and 8.7%, found with copper sulphide ores at Tsumeb, W. Africa. Germanium is a frequent accessory in zinc ores, both sulphide and oxidized, particularly in blendes from the Tri-State district, Wisconsin, and Mexico; 550 kg. of a Mexican blende yielded 5 gm. Ge. Smithsonite from the HUDSON mine, Salem, Ky., contained 0.01% Ge, and water from the same mine gave 0.29% Ge in its total solids. Up to 0.25% Ge has been found in the spelter and zinc oxide made from Tri-State and Wisconsin blendes, being highest in those oxides made by burning mixtures containing spelter retort residues (*9 IEC 661*), indicating that Ge is less volatile than Zn. Flue dust from roasters at Freiberg, where argyrodite occurs, contains no germanium. Germanium is particularly obnoxious in $ZnSO_4$ electrolyte; as little as 0.1 mg. per liter interferes and 1 mg. prevents deposition; corrected by addition of Fe to initial charges (if ore will not provide at least 10 gm. Fe per liter) subsequent precipitation of which occludes Ge along with other impurities (*57 AES 279*). Germanium (estimated at 0.1%) was found in enargite from Butte, Mont., and the SANTA FE mine, Chiapas, Mex.; also (about 0.01%) in enargite from Central City, Colo., and the BRADEN mine, Chile (*49 ACS 3031*).

Treatment. Most likely sources of germanium (if need should arise) would be the clinker from primary zinc retorts and the residues from extraction and purification of $ZnSO_4$ electrolyte. Winkler decomposed argyrodite by fusion with Na_2CO_3 + S at red heat (*VII Mellor 274*). Germanium is separable from its usual associates by volatilization of its tetrachloride (atmosphere of chlorine prevents simultaneous evolution of arsenic); also (except from As and Sn) by precipitation with H_2S in *strongly acid* solution; from As, by fractional distillation of $GeCl_4$(b.p., 86°) from $AsCl_3$ (b.p., 129°). The oxide (GeO_2), from calcination of GeS_2, can be reduced to porous metal by carbon at a little above 1,000° C., and remelted under salt or borax (*31 JPC 1429*).

19. GOLD AND SILVER

Gold

Uses. The principal use is for coinage, for which purpose an alloy with copper is used. The composition of the standard coinage alloy in most countries is 900 parts gold and 100 parts copper (900 fine); Great Britain and Portugal, with standards 916.6 fine, are the principal exceptions. Jewelry is commonly manufactured from gold-copper alloys. The fineness of jewelry gold is expressed in carats. Pure gold, 1,000 fine, is 24 carat. With this basic relation any other fineness or carat rating can be computed by simple proportion. Gold-silver alloys are used to some extent in jewelry manufacture, having a paler color than the usual alloys. An alloy of 750 parts gold and 250 parts iron is sometimes used by jewelers to make BLUE GOLD. A small amount of gold as leaf is used for gilding and gold lettering. Ruby-gold glass is a solid solution of colloidal gold in glass. Potassium aurocyanide is used in gold-plating by electrolysis. Certain gold salts are used in photography.

Ores. The economic minerals are native gold and the tellurides calaverite, sylvanite, krennerite, and nagyagite. The principal ores are those containing native gold as grains of varying, but usually minute, sizes, scales, and foil-like coatings; normally alloyed with more or less silver, copper, iron, and metals of the platinum group; associated almost invariably with quartz and, except in oxidized zones near the surface, with sulphide minerals. Of the latter the most common, in order of frequency of association, are pyrite, galena,

chalcopyrite, sphalerite, arsenopyrite, tetrahedrite, and pyrrhotite. Less frequent sulphide associates are bornite, chalcocite, molybdenite, polybasite, proustite, stephanite, stibnite, and tennantite. In oxidized ores the common metallic decomposition products of the original gold associates are the oxides of iron and manganese and the carbonates and silicates of copper. The usual rock-forming gangue minerals accompanying quartz are calcite, sericite, fluorite, rhodochrosite, siderite, feldspars, and clay minerals. Native gold also occurs mechanically mixed with loose, water-sorted material (PLACERS). Usual associate residual-sand minerals are listed on p. 75. The tellurides (sylvanite and calaverite) ordinarily occur associated with pyrite and with one or more of the other sulphides named above.

Production. Gold in greater or less quantities is produced in more than 40 countries. World production for the more significant years from 1913 to 1938 is shown in Table 38.

Selling. Art. 50.

Table 38. World production of gold (thousands of ounces, troy) (*MI*)

	1913	1918	1919	1921	1929	1932	1936	1937	1938 *d*
United States *a*	4,300	3,321	2,919	2,422	2,217	2,449	4,357	4,834	5,090
Canada	803	711	767	924	1,928	3,051	3,748	4,096	4,716
Mexico	813	814	758	689	655	584	754	846	924
Newfoundland							15	23	18
Total North America	5,916	4,846	4,444	4,036	4,801	6,084	8,874	9,799	10,748
Total Central America	147	164	160	121	53	82	140	140	150
Total South America	738	619	643	667	452	686	1,244	1,389	1,504
Transvaal	8,795	8,419	8,332	8,129	10,413	11,559	11,336	11,735	12,161
Rhodesia	690	631	593	587	562	580	802	808	815
West Africa	380	329	295	204	209	293	428	559	676
Congo, Madagascar, etc.	99	155	159	112	203	304	823	888	966
Total Africa	9,964	9,534	9,381	9,032	11,386	12,736	13,388	13,990	14,618
U.S.S.R. *c*	1,074	581	532	45	1,000	1,990	5,173	4,969	4,900
Other Europe	206	34	15	22	167	298	528	531	548
Total Europe b	1,280	615	547	66	1,167	2,288	5,701	5,500	5,448
British India	540	485	507	470	364	330	333	332	324
East Indies	229	124	146	118	108	78	72	56	50
Japan and Chosen	354	407	254	305	494	643	1,276	1,448	1,570
China and others	183	218	313	143	92	226	294	277	335
Total Asia	1,306	1,235	1,220	1,036	1,058	1,276	1,975	2,113	2,279
Australia and New Zealand	2,553	1,416	1,302	913	581	998	1,608	1,814	2,104
Total world	22,382	18,429	17,697	15,871	19,502	24,151	32,931	34,745	36,851

a Includes Philippines.
b Includes Siberia.
c Based on Soviet press reports.
d Preliminary estimate.

TREATMENT

The factors that influence the choice of a method of treatment for a gold ore are no different from those that must be considered in deciding on a method for any ore. They comprise the technical and economic limitations and advantages, derived in detail and balanced according to the exigencies of the particular situation. But because of the high unit-weight value of gold, the variety of reasonably efficient recovery methods available, the relatively large variation in simplicity, first cost, operating cost, and results that they will effect, and the tremendous variety in type of ores, determination of the best answer in any particular case may be a man-size technical job and a matter of opinion from an economic standpoint. Gardner and Johnson (*IC 6800*) list as major considerations in choice of a type of mill: (1) nature of the valuable and valueless minerals; (2) amenability of the valuable minerals to the available methods of treatment and the effect of the gangue minerals thereon; (3) quantity of ore developed [and amount justifiably suspected, *Ed.*]; (4) comparative treatment costs by the different methods applicable; (5) comparative marketing costs; (6) comparative installation costs; (7) methods of financing available and their comparative costs.

Gardner and Carpenter (*Meet'g A.I.M.E.; San Francisco, Oct., 1935*) presented and compared the flowsheets of 13 small mills treating oxidized siliceous gold-silver ores from the one region around Virginia City, Nev.; they pointed out that the flowsheets range from simple amalgamation with a recovery of about 60% to straight cyanidation with a recovery of upward of 95%, depending to a considerable extent, probably, on financing factors, but to a considerable extent also—on the evidence —on personal predilections of the designers.

Properties of gold important from the standpoint of milling ore are its extremely high specific gravity (15.5 to 19.3, depending upon the amount of alloying metal admixed); the

fact that mercury wets it readily in the presence of water (AMALGAMATES it; Sec. 14, Art. 5); its more or less ready solubility, under proper conditions, in dilute aqueous solutions of alkaline cyanides to form relatively stable compounds of the form $K \cdot Au(CN_3)$; and its response, particularly as naturally alloyed, to flotation collectors. Gold in telluride form does not amalgamate, and is little acted upon by ordinary cyanide treatment.

Milling characteristics of precious-metal ores. The ores of gold and silver constitute an endless variety, but from the standpoint of mineralogical characteristics important in milling they may be classified as follows:

1. Placer deposits, in which the gold occurs free or substantially so, and is relatively coarse. The usual treatment comprises gravity concentration followed by or coincident with amalgamation.

2. Simple free-milling vein deposits, comprising those in which the gold is relatively coarse and amalgamable, the sulphide content is low and nonarsenical, oxidized compounds of bismuth and antimony are absent, and the gangue is substantially free from talcy, clayey, and graphitic constituents. Treatment is by amalgamation, supplemented usually by gravity concentration with amalgamation of concentrate, and frequently further supplemented by cyanidation of tailing. Recovery by amalgamation alone after crushing to 35-m. may be 50 to 70%, with increase to 75 or 85% by supplementing with gravity concentration. It should be borne in mind that free-milling ores occur usually in shallow oxidized surface zones and that their amalgamable character may change markedly when the unaltered zone is reached.

3. Simple nonamalgamable ores, comprising low-sulphide or nonsulphide ores in which the gold is coarse enough to amalgamate, but is so coated on the surface (RUSTY) that it is not wetted by mercury; and those in which the gold, although bright when freed, is so fine that it will not settle sufficiently in a flowing pulp to come into contact with the mercury. The first class is usually treated by gravity concentration to recover the rusty gold, concentrate is ground, with or without chemicals, to remove the rusty coating, and is then amalgamated. If there is sufficient fine gold to justify the expense, the gravity tailing is cyanided; this is the usual case. The second class of ores is usually ground fine and cyanided. Rusty gold gives trouble in flotation (see Sec. 12, Art. 49).

4. Sulphide ores low in valuable base metals. The sulphides may or may not contain minerals that are refractory to cyanidation, and the gold may be associated with one of the sulphides, substantially with all of the sulphides, with the gangue only, or with both gangue and sulphides. The underlying principles of treatment are that concentration will separate sulphides from rock-forming minerals, that cyanide will dissolve the gold, and that roasting will remove cyanicides. Application of these principles results in all-cyanidation for ores with gold distributed through both sulphide and nonsulphide gangue with no cyanicides present; separation of sulphides from nonsulphide when the values are concentrated in the sulphide (or when they are in the gangue and the sulphide contains cyanicides), with appropriate treatment of the separated parts, which may be smelting of sulphide, cyanidation of sulphide with or without prior roasting, or cyanidation of nonsulphide. Recovery by cyanidation will normally run 90% upward to 98%; flotation recoveries cluster, in general, between 80 and 90%, but may easily run higher.

5. Sulphide ores relatively high in valuable base metals, with an important gold content, or with the gold a minor constituent. Economics usually demand recovery of the base metal or metals (*e.g.*, Pb, Cu, Zn) and, since the gold will normally follow these concentrates to a greater or less extent, and smelting such concentrate gives the highest economic yield of combined values, the concentrate is shipped to smelters. If tailing contains sufficient precious metal, it is cyanided.

In addition to the principal ore characteristics above listed, minor components of the ore often have a determinative effect on the method of treatment. TELLURIDES will not amalgamate directly. ARSENIC, ANTIMONY, and, to a lesser extent, BISMUTH MINERALS sicken mercury by coating the surface with a solid film which prevents gold from making effective contact with the liquid metal, and which promotes flouring (Sec. 14, Arts. 5, 6). The sulphides realgar and orpiment and partially oxidized stibnite, arsenopyrite, and other complex arsenic and antimony minerals are particular offenders. Pyrrhotite and chalcopyrite may also tend to sicken the mercury in barrel amalgamation (*Bul 342 CIMM 407*). These substances also react with and consume cyanide, by rendering it into forms incapable of dissolving gold (FOULING), and, being readily susceptible to oxidation, they deoxidize cyanide solutions and thus remove an essential constituent in the cyanide-gold reaction. OXIDIZED MINERALS of the HEAVY METALS, particularly those of copper and iron, also react with cyanide to form complex ions which render the cyanide substantially inactive. CARBONACEOUS MATERIAL, ranging in antiquity from living matter in the water, through spilled lubricant, to graphite in the ore, tends to consume cyanide, foul solutions, and prematurely precipitate dissolved gold. TALCOSE and CLAYEY MINERALS, particularly in the presence of lubricant introduced in mining, tend to sicken mercury, come up with concentrate in flotation, and cause slow settlement and filtration in cyanidation.

General practice on arsenical ores is to cyanide directly, if the arsenic content is low and in the form of fresh arsenopyrite and there is not too much pyrrhotite present. With higher As content, or with ores that TARNISH (oxidize) quickly or are already noticeably oxidized at mine, general procedure is to float, roast concentrate, and cyanide calcine. This is the practice at LAKE VIEW AND STAR, GREAT BOULDER, BOULDER PERSEVERANCE, and WILUNA in Australia, at GOLDEN CYCLE in the United States, and at a number of the

mills in the Little Long Lac and Sturgeon River regions in Canada. SOUTH KALGURLI and GOLDEN CYCLE (custom) roast the whole ore. Since gold coarser than 40-m. is not recoverable by flotation, some form of gravity concentration must appear in these flowsheets; usual practice is to put this operation in the primary-grinding circuit.

Several refractory ores were tested at the laboratory of the Council for Scientific and Industrial Research in Australia (*32 CEMR 152*). A pyrite-arsenopyrite concentrate (86% >100-m.) containing upward of 2.3 oz. Au per ton yielded nothing to amalgamation as received, but 53% recovery was made after regrinding to 85% <200-m., and cyanidation of amalgamation tailing raised recovery to 92% with a consumption of 6.5 lb. cyanide per ton of concentrate. Roasting, with amalgamation and cyanidation of calcine, without regrinding, yielded 97.6% of the gold with a consumption of 10 lb. cyanide and 9.7 lb. lime per ton of calcine. An As-Sb concentrate assaying 15.3% As, 1.3% Sb, 28% Fe, 28.2% S, the principal minerals being pyrite and arsenopyrite, yielded 33.2% of the gold content by amalgamation as received; on regrinding the mercury sickened. Cyanidation of amalgamation tailing raised extraction to 89% with consumption of 7.3 lb. cyanide and 7.5 lb. lime. Regrinding amalgamation tailing to 200-m. before cyanidation raised total extraction to 94.1% but also raised reagent consumption to 13 lb. cyanide and 25 lb. lime. Roasting, water-washing unground calcine, amalgamating and cyaniding yielded 97% extraction with a consumption of 15.7 lb. cyanide and 6.1 lb. lime per ton of calcine; regrinding calcine to 98.2% <200-m. after washing but before amalgamation and cyanidation raised yield to 98.2%, but cyanide consumption went up to 23.4 lb. An oxidized ore containing 0.1% Bi yielded 26% of the gold by straking at 25-m. and 90% (total) on cyanidation of strake tailing for 20 hr., with a consumption of 0.54 lb. cyanide and 2 lb. lime. Grinding strake tailing to 78% <200-m. before cyaniding gave 95.8% total yield with 0.31 lb. cyanide and 3.9 lb. lime, while at 98.2% <200-m. the corresponding figures were 97.2, 0.72, and 4. Flotation with amyl xanthate and copper sulphate recovered 47 to 68% of the Bi in a concentrate assaying 10 to 14% Bi (20% Bi is minimum salable grade) but the gold content was too high. A concentrate containing As and Cu consumed an excessive amount of cyanide as received. Roasting, straking calcine and amalgamating strake concentrate, water-washing tailing, and then cyaniding gave 43% recovery of gold with a consumption of 11.3 lb. cyanide and 1.9 lb. lime per ton of calcine. Substituting an acid wash for the water wash to remove substantially all Cu produced 90.5% extraction with loss of 3.8 lb. cyanide and 1.9 CaO per ton of calcine. Another Bi-bearing ore in which the gold occurred in stibnite (*32 CEMR 49*) was floated 10 min. at 74% <200-m., pH = 6, using 1 lb. per ton lead acetate to activate the stibnite, plus 0.5 lb. amyl xanthate, 0.16 lb. pine oil, and 0.16 lb. cresol. Concentrate assayed 55.6% Sb and 2.77 oz. Au from feed assaying 9.65% Sb and 0.545 oz. Au. Recovery was 83.6% of Sb and 74.2% of Au. Recovery without the acetate was 60% Sb; additional acetate showed no improvement. Greenwood (*103 Aa 220*) states that Australian practice in treatment of refractory ores tends toward trakes in the primary grinding circuit, flotation, roasting of concentrate, straking calcine, and then cyaniding. At LAKE VIEW AND STAR, with such a flowsheet, 18% of the gold is recovered on the grinding strakes and 14% on the calcine strakes; flotation concentrate assays 3.3 oz. Au, and mill tailing is 0.031 oz. from a mill feed of 0.345 oz.

Hargraft (*43 CIMM 576*) has analyzed practice in the Little Long Lac and Sturgeon River areas in Canada where the ores all carry arsenic, ranging from 0.2 to 1.6% from mill to mill, iron ranging from 1 to 17%, sulphur from 0.6 to 9%, and copper from a trace to 0.01%. The tendency for cyanide solutions to foul increases with the As content of the ore. Five of the mills cyanide raw ore; the other five float, roast concentrate, and cyanide calcine. Much of the gold is fairly coarse. All the mills have some form of concentration in the grinding circuit; two use blankets, five have jigs, two use flotation (unit cells) alone, and three use both flotation and gravity concentration, the gold being too coarse to float. Recoveries in these apparatus range from 22 to 89% of the total gold saved. Grinding-circuit concentrate is amalgamated at six mills.

Hand picking. Since cyanidation is a part of most gold flowsheets, and since it normally requires very fine grinding for high extraction, reduction of mill tonnage is an important consideration. Hence picking is practiced wherever it will remove any appreciable tonnage assaying near the content of normal mill tailing. Von Bernewitz (*138 J 185*) noted that picking is practiced at ALASKA JUNEAU, CRIPPLE CREEK, HOWEY, KOLAR, MORRO VELHO, RAND, and YELLOW ASTER, with 5 to 50% of mine ore removed, and stated that the practice is increasing.

Flowsheets for the treatment of gold and silver ores may be classified from the standpoint either of the kind of ore treated or of the method of separation employed. Ultimately, of course, both methods of attack come to the same point, in that the flowsheet is adapted to the ore. For purposes of comparison, however, grouping on the basis of method gives a simpler arrangement and a more logical development, for the reasons, perhaps, that ores are more complex than treatment methods, and less subject to classification, and further that ores vary in composition from working face to working face in a given mine, or from mine to mine in a group, all feeding the same mill, and the mill flowsheet becomes, under such circumstances, a compromise of methods in which the best treatment for a minor constituent is sacrificed to the aim of an economic optimum for the whole.

Separation methods applicable to gold and gold-silver ores are amalgamation (Sec. 14, Arts. 5 to 8); **gravity concentration, particularly sluicing, straking, fine jigging, and tabling** (Sec. 11); **flotation** (Sec. 12, Art. 49), **cyanidation, and smelting. Silver, when it occurs**

other than as a minor associate of gold, is usually so closely associated with copper or lead minerals that it remains locked with them in ordinary grinding, or goes with them, even if freed, when subjected to ordinary methods of concentration, so that separation is deferred to smelting treatment.

The primary desideratum in precious-metal separations is recovery in metallic form at the mill, since this both reduces freight and separation costs (by eliminating shipment to a smelter and smelter charges), and, by making cash returns quickly available, decreases the amount of working capital necessary. Amalgamation and cyanidation both yield bullion at the mill. Hence one or both of these methods is normally practiced, if the ore is amenable. Nonamenability may flow from minuteness of size of the precious-metal particles, or from association with minerals which interfere with the working of the processes. In either case concentration is utilized as a means of reducing bulk to an extent that makes more intense treatment by amalgamation or cyanidation economically possible, or to get the values into the best shape for final separation by smelting. Costs of ultimate separation increase from simple amalgamation to flotation with smelting of concentrate; the following list comprises an arrangement of treatment methods and combinations thereof in general order of increasing total charges against the gold, which embraces most flowsheets.

1. Amalgamation only. Applicable to clean primary ores, and to fully oxidized surface ores of gold in which the gold particles are not too fine to settle in a shallow flowing stream of water, and are not rusty. Plants using amalgamation only are those which serve small mines, usually in the prospecting stage, extracting high-grade ore. Typical examples are reported from northeastern Oregon (*IC 7015*).

At the GLEASON MINE a highly oxidized quartz ore is fed directly into a battery of 5 @ 650-lb. stamps, crushed through a 45-m. screen, and passed over an amalgamating plate sending tailing to waste. A recovery of 90% from $40 ore is reported. The power plant consists of a 12-hp. steam engine and a 14-hp. wood-burning boiler. See also Fig. 78.

2. Gravity concentration + amalgamation. Applicable to ores in which gold is relatively coarse, but either coated, or associated with sulphides not harmful to amalgamation, or ores in which the amount of gold is very small (placers). In any case the initial recovery is made by concentration, and concentrate is amalgamated, either in the concentrator (*e.g.*, mercury in sluice riffles), or in a barrel or the like, with more or less regrinding, if necessary to render the particles amenable to mercury wetting and collection.

This is the typical treatment scheme for placers (Art. 20), for small mills to treat high-grade lode ores in the development stage, and, at a few plants, for the final mill for such ores. For many years it was the only type of mill used for ores such as those on the Mother Lode in California (see *IC 6476*, ARGONAUT MILL). For recent Mother Lode practice see IDAHO-MARYLAND (Fig. 64) and also p. 99.

At MONT TSI, Belgian Congo, ore is ground in a Chilean mill with mercury, passes through an amalgam trap, thence over blanket tables, is thickened, ground in a ball mill-classifier circuit with Hg, passes through an amalgam trap, and thence over blankets which make final tailing. All concentrates are barrel-amalgamated.

3. Amalgamation ± gravity concentration + cyanidation. Applicable to clean ores containing gold of a wide range of sizes, a part too fine for amalgamation and a part too coarse for rapid solution by cyanide.

4. Cyanidation only. Applicable to clean ores with gold finely dispersed, sulphide content relatively low, and at least an appreciable part of the gold in the nonsulphide mineral. See *Rose and Newman; Dorr.*

5. Cyanidation + concentration + cyanidation of concentrate. Used with clean ores containing a relatively small amount of pyrite in which the gold is extremely fine. The ore is usually ground in cyanide solution, a sand-slime separation made, pyrite floated from the sand, concentrate reground (usually in cyanide) to expose the gold, and the reground material further cyanided separately or mixed back with the original slime.

6. Flotation (± gravity concentration and/or amalgamation) + cyanidation of concentrate. For clean ores with relatively high pyrite content, low content of valuable base metals (Pb, Zn, Cu), and gold largely associated with the sulphides. If coarse gold is present, amalgamation or gravity concentration with amalgamation of concentrate is inserted in the grinding circuit.

7. Flotation + cyanidation of tailing. Used for ores in which important amounts of gold are present in the nonsulphide minerals, and the sulphides are independently valuable or contain minerals harmful to cyanidation. Sulphide concentrate may either be smelted or treated (*e.g.*, roasting of arsenical concentrate) to render it amenable to cyanidation.

8. Flotation ± gravity concentration and/or amalgamation. Used for ores in which the gold is associated with sulphides and may not be separated from them other than by smelting, either for economic reasons (sulphides valuable and precious metals recovered from them as an incident to smelting), or for technical reasons (removal of cyanicides too costly; gold too fine, etc.). Use or non-use of gravity concentration depends upon the size at which sulphides free, and use of amalgamation is dependent upon size of gold, its surface character with and without grinding, the nature of the sulphide associates, and the quantity of gold thus recoverable.

In so far as any one principle can be said to be common to all of the great variety of flowsheets used on gold ores, that of taking out coarse gold as early and as quickly as possible is practiced, hence whenever coarse free gold is present some form of recovery at coarse-sand sizes is found; *vide* DOME, MCINTYRE, HOLLINGER, HOMESTAKE, etc.

Grade of ore and daily tonnage both affect milling methods through economic relationships. High-grade ores permit great latitude in the complexity of the method in that they will usually pay dividends with the most simple and inefficient mill, and will yield increased returns that will more than pay capital charges for almost any efficient refinement of treatment; they may be milled profitably at almost any daily tonnage up to the producing limit of the mine. Low-grade ores, on the other hand, must be milled at relatively high daily tonnages in order to spread fixed charges and superintendence over a sufficiently large weight of gold; the method of treatment must be both efficient and cheap.

Location of plant may be determinative as to process, in that freight on concentrate may be so high as to preclude shipment; in any case, it is an important economic factor in the choice between concentration and amalgamation or cyanidation, which latter methods produce bullion at the plant. Cyanidation of concentrate is, of course, an alternative.

Funds available for plant construction may cause concentration and/or amalgamation to be practiced where cyanidation is indicated from the standpoint of profitable extraction, because of the very considerable difference in first cost between the two types of plant.

Recoveries by concentration and amalgamation on free-milling ores range from 60 to 90%, according to amenability of the ore, and average between 70 and 75%; cyanidation yields run between 85 and 95 to 98%, averaging 90 to 95; flotation yields are usually between 80 and 90%, with recoveries between 90 and 95 not unusual, and cyanidation of nonrefractory concentrate will readily extract upward of 90% of gold in concentrate.

Marketing. Amalgamation and cyanidation yield bullion at the plant at a production cost from the crude concentrate (amalgam and precipitate respectively) much lower than that for smelting a concentrate produced by gravity concentration or flotation. Transportation of bullion per unit weight of precious metal is also much cheaper than that of concentrate.

Costs. Operating costs range from as low as 1.5 to 3¢ per ton for efficient high-tonnage hydraulicking or dredging to $2 to $3 per ton at small mills treating more or less refractory ores. Costs for large-scale milling involving fine grinding and cyanidation cluster around $1 per ton. Costs in very small, crude mills may run up to $3.50 or $4 per ton, even with simple flowsheets. Cost of plant ranges from $150 to $200 per ton of daily capacity for a simple amalgamation-gravity concentration plant built with cheap second-hand equipment and crudely housed to $2,000 per ton for a small, well-housed cyanide plant with all new equipment in a relatively remote location.

20. MILLING OF PLACER GOLD

Ore is sand or gravel plus the upper 6 to 12 in. of bedrock, with metallic gold. Heavy-sand associates of the gold (BLACK SANDS), in order of usual frequency of occurrence are: magnetite, ilmenite, rutile, garnet, zircon, hematite, chromite, olivine, epidote, pyrite, monazite, limonite, platinum, osmium, cinnabar, wolframite, scheelite, cassiterite, corundum, diamond, quicksilver, amalgam, galena (*IC 6786*). Gold particles occur in all sizes from nuggets weighing many pounds to colors running 200 to 1,000 to the cent. Ordinarily gold coarser than 10-m. is called COARSE, 10~20-m. is MEDIUM, 20~40-m. is FINE, <40-m. is FLOUR.

Methods of treatment differ principally because of mining problems, the requirements of tailing disposal, and the water supply rather than because of the concentrating problem. Gravity concentration of the crudest kind, with a size ratio between largest gangue particle and finest gold color of many thousand to one, is possible on account of the high specific gravity of gold. Sluices of some form (Sec. 11, Art. 26) are used in the great majority of cases, but shaking tables, fine jigs, and various (and frequently outlandish) modifications of these mechanical types are found in some plants. Necessary variations in preparation procedure are imposed by differences in size range of gravels and by the clay content, while size of gold and clay content influence the length and, to a certain extent, the design of sluices, particularly as respects riffling.

Essentially, a plant for saving placer gold comprises a disintegrating means to free the gold (equivalent to the crushing and grinding sections of the usual lode-mine plant), a means of rough concentration, a means of cleaning concentrate, and a means of tailing disposal. Since disintegration is often an incidental part of the mining operation and concentration is, as above noted, relatively simple, practice has tended to classify operations from the standpoint of the size of the deposit and the method of mining, rather than on the basis of the nature of the concentrating plant.

Panning and rocking are employed to work very small high-grade placers where water is scarce. (See Sec. 11, Art. 14.)

Shoveling-in is a long-tom or sluice operation (Sec. 11, Art. 26) applied to small, moderately rich deposits, with little water or little grade available. It comprises manual shoveling from the bed of gravel and lifting into a line of small sluices set high enough above bedrock to afford tailing disposal.

Maximum shovel lifts are 7 to 8 ft.; maximum efficient lift is 5 to 6 ft.; the lift is ordinarily broken, if the thickness of the bed of gravel averages more than 3 to 4 ft. Narrow sluices, 8 to 24 in. wide, are used, with shovel boards (one side of sluice raised) against which gravel is thrown. The best width of cut is about 6 ft. both sides. Stones larger than 5-in. are not shoveled in. Slope is 6 to 8 in. per 12-ft. box, if there is sufficient water. With insufficient water steeper slopes must be used and a screen box is placed at the head of the sluice to receive the feed. Water is fed into the box, oversize is forked out and clay balls disintegrated by puddling. A minimum flow of 15 to 20 miner's inches (170 to 225 g.p.m.) is required for a 12-in. box with a steep grade. The usual crew is 1 to 4 men. Capacity depends on the lie and character of the gravel, the amount of water, and the size and slope of the sluice. For mining detail see *Peele*.

Performances at several representative mines are given in Table 39. Average duty per man-shift, including cleaning bedrock, cleaning up sluice, and moving sluice line as necessary is between 3 and 4 cyd. Wimmler gives range in Alaska as 2 1/2 to 10 cyd. per 10 hr. with 3- to 7-ft. lifts.

Table 39. Shoveling-in at western United States placers (*IC 6786*)

Mine at *a*	1	2	3	4	5	6	7
Depth of gravel, ft	2	6	6	2.5	4.5	6	.....
Character of gravel	Loose	Tight	Tight	Tight	Loose	Medium	Tight
>6-in. boulders, %	0	30	20	50	10	5	.....
Bedrock	None	Clay	Even	Rough	None	Even	Clay
Sluice boxes: Width, in.	8	8	12	12	10	8	18
Grade, in. per ft	1	1	7/16	1/2	.....	6/10	.....
Length each, ft	12	12	16	12	12	10	22
No. of boxes	2	8	4	3	3	6	1
Riffles: Type	Hungarian	Steel mat on Cocomat	Hungarian; pole	Screen on carpet	Screen on carpet	Transverse	Transverse
Size, in.	1×1 1/4	.....	3/16×1 1/4	.....	.....	1×1	1×1
Spacing, in.	1	.....	1	.....	.....	4	1
Length riffled, ft	12	8	64	12	12	28	18
Percentage of material rehandled	5	10	0	50	0	0	200
Number of men	2	4	4	2	2	2	1
Cyd. per man-shift	10 to 15 *b*	6.2	5	1	3.2	4.8	1

a 1. Oroville, Calif.; 2. Oroville, Wash.; 3, 4. Blewett, Wash.; 5. Blackhawk, Colo.; 6. Bearmouth, Mont.; 7. Wilcox, Ariz.

b With no >1 1/2-in. sizes.

Cost ranges from $1 per cyd. in easy gravel to $4 under difficult conditions.

Ground sluicing is a mining method which involves excavating and transporting gravel to the sluice line by water under ordinary stream pressures only. Ditches, wing dams, and the like are used to lead the stream from the face to sluice lines which start on bedrock. Stream water-action is usually augmented by manual work, or by a small giant (see ***Hydraulicking***), or by using the water in rushes (see ***Booming***).

The method is normally used in small operations where the size of the deposit will not justify more elaborate use of water, or where lack of available head or available capital prohibits use of pressure water. It is not effective with tight or cemented gravel. According to *Wimmler* it is best adapted to shallow gravels (<10 ft. thick) containing relatively coarse gold; it has been used on 80-ft. banks in exceptional cases. The best places for its use are benches and the upper reaches of creeks with steep grades.

Booming is a form of ground sluicing in which the stream water is dammed for a sufficient period to give flood rushes on release, with consequent greater excavating and transporting power of the available water.

Larger sluices are required to handle the floods. Duration and extent of floods are, of course, related inversely. Long floods of low intensity are the more desirable from the standpoint of gold saving; short, intense floods excavate and transport coarse gravel the more effectively. Automatic flood gates are commonly used, closed by a spring or weighted lever, and opened by a trigger mechanism actuated by floats, overflows from a full dam, etc. Boulders are removed separately by hand or by mechanical means such as derricks or draglines. For mining detail see *Peele*.

Performances in western United States in 1932 are given in Table 40. *Wimmler* gives 15 to 35¢ per cyd. for the usual cost range in Alaska, dropping to 7¢ for especially favorable conditions and rising to $1 when much shoveling-in is involved additionally.

Table 40. Performances in ground sluicing and booming (*IC 6786*)

Name of mine	Morgan	Ravano	Bar No. 1	Osborne	Rundle	Bar No. 2	Kamloops	Willow Creek	Camp Bird	Bennet	Harvey	Magnus
Location	Blackhawk, Colo.	Laurin, Mont.	Granite, Colo.	Superior, Mont.	Blackhawk, Colo.	Granite, Colo.	Granite, Colo.	Therma, N. M.	Laurin, Mont.	Rivulet, Mont.	Lincoln, Mont.	Liberty, Wash.
Gravel: Character	Tight	Medium	Medium	Medium	Medium	Medium	Medium	Medium	Medium	Medium	Medium	Medium
Depth, ft.	5	6	6	15	8	6	18	20	10	15	22	20
>6-in. boulders, %	20	25	10	15	15	10	10	10	15	10	35	25
Clay, %	5	0	0	0	2	0	0	1	0	2	5	1
Bedrock	Soft, clay	Soft, limestone	Soft, clay	None	Rough, hard	Soft, clay	None	None	Soft, limestone	Rough, hard	Soft	None
Water: available, in.	70	30	60	80	60	60	100	70	70	10	300	500
Reservoir capacity, acre-ft.	None	1	None	None	None	None	None	1.25	0.5	0.1	0.6	1.8
Method of use	Stream	Boom	Stream	Stream	Stream and nozzle	Stream and nozzle	Stream and nozzle	Boom	Boom and nozzle	Boom	Boom and nozzle	Boom
Flood flow, in.	.....	150	.....	.....	.....	.....	.....	300	650	1,600	7,500	4,000
Boom period, min.	.....	240	.....	.....	.....	.....	.....	27	30	1.5	2.5	15
Booms per da.	.....	1	.....	.....	.....	.....	.....	4	2	6	24	14
Auxiliary handling method	Hand	Hand	Hand	Steam derrick	Hand fork	Hand	Dragline *b*	Hand	Hand	Hand	Hand derrick	.....
% boulders removed	40	40	15	15	30	15	20	10	20	10	30	0
Max. size to sluices, in.	6	3	4	6	3	4	2	6	3	6	9	15
Sluice boxes: Width, in.	18	.....	12	13	24	18	30	18	22	36	38	48
Height, in.	12	.....	8	13	12	12	20	10	16	18	36	36
Length ea., ft.	10	12	12	12	16	12	12	12	12	12	12	12
Grade, in. per ft.	1.2	0.5	1.5	0.33	1	0.25	0.25	0.5	1	0.75	0.75	0.6
Number	2	3	3	7	1	2	42	50	3	3	16	84
Riffles: type	Screen on carpet	Pole	Cross on burlap	Pole	Cross on screen on corduroy	Cross on burlap	Cross	Round block	Pole	Pole	Pole	20-lb. rail
Size, in. *a*	.....	3×3	1×1	3×3	3/4×3/4	1×1	1 1/4×1	18×5	3×3	3×3	6×6	1 1/2×2 5/8
Spacing, in.	.....	1	1	1	5	1	1	0	1	1	1	2
Riffled length, ft.	20	36	36	84	16	24	250	600	36	36	96	400
Men working	1	1	3	6	1	2	4	4	2	1	1	9
Cyd. per man-shift	2.75	9	3	9	3	12	18	4	18	17	32	7
Cost, $ per cyd.	1.29	0.39	1.19	0.42	1.19	0.31	0.24	0.91	0.22	0.22	0.14	0.54

a Width × height.

b With 3-in. grizzly buckets.

Table 41. Performances at hydraulic mines in western United States (*IC 6787*)

Mine	Gravel					Bedrock	Water, giants	Miner's in., total consumption	Hrs. used daily
	Location	Character	Depth, ft.	% >12-in. boulders	% clay				
Senger	Weaverville, Calif.	Tight, rooty	6	20	5	Smooth, gravel	400	400	5
Elephant	Volcano, Calif.	Tight	45	3	3	Soft, slate	135	175	4
Horton Gulch	Cecilville, Calif.	do.	17	5	5	Soft	220	250	9
Banner	do.	do	15	10	4	do.	300	300	10
Indian Creek	Douglas City, Calif.	do.	9	8	5	Uneven	500	500	5
Salmon River	Cecilville, Calif.	Medium	17	6	..	Soft	1,100	1,100	9
Jacobs	Junction City, Calif.	do.	40	5	5	Slate, uneven	460	460	1.5
Omega Hill	Washington Camp, Calif.	Tight	45	8	..	Soft schist, uneven	1,300	1,500	10
Indian Hill	Comptonville, Calif.	do.	35	10	..	Slate, rough	430	650	9
Depot Hill	do.	do.	60	5	.....	Slate, uneven	450	600	.....
North Fork	Helena, Calif.	Cemented	55	5	2	Uneven	1,300	1,300	23
Salyer	Salyer, Calif.	do.	100	.....	.....	.....	2,800	2,800	24
Norton and Nelson	Galice, Oreg.	.....	12	12	2	Slate, rough	210	600	9
Salmon Creek	Baker, Oreg.	Tight	25	8	10	Slate, soft	90	150	8
Blue Channel	Wolf Creek, Oreg.	Cemented	20	3	.....	Hard, uneven	1,200	1,200	5
Deep Creek	Lozean, Mont.	Tight	15	10	.....	Rough	100	200	5
Yellowstone Gold	Emigrant, Mont.	Loose	30	5	.....	None	240	600	18
Virginia City	Virginia City, Mont.	Medium	30	5	.....	.....	70	85	.....
Henderson No. 1	Gold Creek, Mont.	do.	45	10	5	Soft, clay	600	600	2
Henderson No. 2	do.	do.	15	2	10	do.	150	150	4
Wisconsin Gulch	Sheridan, Mont.	Tight	27	20	.....	Schist, soft	1,300	2,800	24
Stemwinder	Superior, Mont.	Medium	70	5	10	Soft	130	180	2.5
Diamond City	Townsend, Mont.	do.	12	10	.....	Slate, rough	100	900	.....
Superior	Superior, Mont.	do.	60	5	.....	Even	85	.....	.....
Hackensmith	Leesburg, Idaho	do.	12	5	5	.....	.....	150	.....
Golden Rule	Warren, Idaho	do.	12	5	.....	Even	275	.....	12
Fortune	Kokomo, Colo.	Easy	30	1	0	Sandstone, soft	190	.....	20
Dodman and Weston	Breckenridge, Colo.	do.	50	5	.....	Slate, rough	50	400	8
Round Mountain	Round Mtn., Nev.	Partly cemented	30	15	.....	Uneven	400	400	7
Redding Creek	Douglas City, Calif.	Medium	9	8	.....	Cement gravel, smooth	1,200	1,200	24
Browning	Leland, Oreg.	do.	12	2	.....	Even	900 *f*	900	24
Llano de Oro	Waldo, Oreg.	do.	25	0	15	Soft	1,700 *e*	11,700	24
Platurica	O'Brien, Oreg.	Tight	35	1	.....	Uneven	650 *e*	650	24
Davis	Centerville, Idaho	do.	5	15	.....	.....	240 *e*	240	24
Gallia	Sawyer's Bar, Calif.	Medium	33	10	.....	Even	725 *f*	2,000 *e*	.....
Lewis	Galice, Oreg.	do.	18	3	.....	Even	300 *e, f*	300	9
Conners	Bridgeport, Oreg.	do.	.....	5	.....	Rough, soft	28	28	.....
Eldorado Bar	York, Mont.	Easy	14	5	.....	.....	60	350	.....
Old Garden Gulch	Centerville, Idaho	Medium	17	1	0	Soft	400	400	16

Mine	Location	Elevation of gravel		Method of handling boulders	Sluice				
		Method	Hgt., ft.		Max. size of particle, in.	Width, in.	Depth, in.	Length, ft.	Slope, in. per ft.
Senger	Weaverville, Calif	.....	0	Blast	12	36	24	96	3/4
Elephant	Volcano, Calif.	.....	0	Hand	.....	18	16	32	.....
Horton Gulch	Cecilville, Calif.	.....	0	Blast	.....	24	18	36	1
Banner	do.	.....	0	Power derrick	.....	26	24	36	1
Indian Creek	Douglas City, Calif.	.....	0	Blast	18	48	36	48	3/4
Salmon River	Cecilville, Calif.	.....	0	Power derrick	18	36	30	150	7/12
Jacobs	Junction City, Calif.	.....	0	Blast	18	48	36	120	3/4
Omega Hill	Washington Camp, Calif.	.....	0	do.	18	48	36	1,700	1/2
Indian Hill	Comptonville, Calif.	.....	0	Hand; blast	14	40	40	288	1/2
Depot Hill	do.	.....	0	do.	4	30	24	3,500	3/4
North Fork	Helena, Calif.	.....	0	do.	12	48	40	168	1
Salyer	Salyer, Calif.	.....	0	Crane and tractor	.....	60	50	350	3/4
Norton and Nelson	Galice, Oreg.	.....	0	Hoist	.....	20	20	100	3/4
Salmon Creek	Baker, Oreg.	.....	0	Power shovel	6	26	20	180	1 1/4
Blue Channel	Wolf Creek, Oreg.	.....	0	Hand; blast	12	36	.....	80	.....
Deep Creek	Lozean, Mont.	.....	0	Hand	9	20	18	300	3/4 to 1 1/2
Yellowstone Gold	Emigrant, Mont.	.....	0	Power derrick	12	23	24	500	1/3
Virginia City	Virginia City, Mont.	.....	0	Hand car	6	14.5	18	180	5/12
Henderson No. 1	Gold Creek, Mont.	.....	0	Power derrick	10	22	24	120	3/4
Henderson No. 2	do.	.....	0	Hand	8	22	24	120	3/4
Wisconsin Gulch	Sheridan, Mont.	.....	0	Power derrick	20	44	40	1,900	7/24
Stemwinder	Superior, Mont.	.....	0	Hand	8	24	18	240	7/12
Diamond City	Townsend, Mont.	.....	0	Power shovel	10	32	36	2,700	1/3
Superior	Superior, Mont.	.....	0	Steam derrick	.....	48	60	5,000	11/48
Hackensmith	Leesburg, Idaho	.....	0	Hand	.....	18	18	600	9/24 to 2/3
Golden Rule	Warren, Idaho	.....	0	do.	12	30	.....	160	3/4
Fortune	Kokomo, Colo.	.....	0	do.	18	26	30	72	2/3
Dodman and Weston	Breckenridge, Colo.	.....	0	do.	10	28	18	132	.....
Round Mountain	Round Mtn., Nev.	.....	0	Derrick; cars	.....	36	36	5,000	1/3
Redding Creek	Douglas City, Calif.	Hyd. elev.	25	Blast	2	48	.....	48	3/4
Browning	Leland, Oreg.	Ruble	14	Hand	3/4	48	.....	32	7/16
Llano de Oro	Waldo, Oreg.	Hyd. elev.	44	None	3	30	24	700	1/8 to 5/16
Platurica	O'Brien, Oreg.	do.	54	Hand; blast	8	32	.....	304	3/8
Davis	Centerville, Idaho	do.	17	do.	6	32	24	72	3/4
Gallia	Sawyer's Bar, Calif.	Ruble Hyd. elev.	25 30	Derrick	2 1/2	24	24	125	9/24
Lewis	Galice, Oreg.	Ruble Hyd. elev.	11 9	Hand; blast	5	30	.....	95	3/4
Conners	Bridgeport, Oreg.	.....	0	Hand	4	12	10	90	1 1/2
Eldorado Bar	York, Mont.	.....	0	do.	8	30	36	400	1/4
Old Garden Gulch	Centerville, Idaho	Hyd. elev.	19.5	Derrick	7	30	.....	96	3/4

Table 41. Performances at hydraulic mines in western United States (*IC 6787*)—*Continued*

Mine	Location	Water		Riffles					Cyd. per day	Cyd. per man-shift	Cost, ¢ per cyd. *a*
		Miner's in.	Cyd. per 24 hr. per miner's in.	Type	Width, in.	Height, in.	Length, ft.	Spacing, c.-c., in.			
Senger	Weaverville, Calif.	400	0.5	Cross	2	6	3	4	40	20	20
Elephant	Volcano, Calif.	175	0.8	Hungarian	.....	.....	1 1/2	.....	62	20	22
Horton Gulch	Cecilville, Calif.	250	0.9	Rock	.....	6	.....	.....	80	40	11
Banner	do.	300	.....	Pole	4	4	2 1/6	4 1/4	.....	84	5
Indian Creek	Douglas City, Calif.	500	3.7	Block	12	12	.....	12	350	175	7.6
Salmon River	Cecilville, Calif.	1,100	.....	Rock	.....	7	.....	.....	223	56	7
Jacobs	Junction City, Calif.	460	4.2	Block	.....	.....	.....	.....	240	120	5
Omega Hill	Washington Camp, Calif.	1,500	2.7	do.	.....	12	.....	.....	1,700	280	4 *b*
Indian Hill	Comptonville, Calif.	650	.....	do.	12	12	.....	.....	.....	.....	8 *c*
Depot Hill	do.	600	1.0	do.	12 to 24	7	.....	12	.....	.....	11.5 *a*
North Fork	Helena, Calif.	1,300	1.0	Rail	.....	3 1/2	12	4 1/4	900	140	4.5
Salyer	Salyer, Calif.	2,800	4.3	Block	.....	.....	.....	18	7,400	500	2.6 *d*
Norton and Nelson	Galice, Oreg.	600	.....	Hungarian	.....	.....	2 2/3	.....	80	40	12
Salmon Creek	Baker, Oreg.	150	2.6	Rail	2	2 1/2	10	4	260	33	20
Blue Channel	Wolf Creek, Oreg.	1,200	.....	Hungarian	2	4	3	6 1/2	.....	.....	.....
Deep Creek	Lozean, Mont.	200	1.3	Pole	4	4	6	15	57	11	42
Yellowstone Gold	Emigrant, Mont.	600	0.5	Angle-iron	2	1 1/2	1 11/12	2 3/4	100	31	13
Virginia City	Virginia City, Mont.	85	1.4	Hungarian	2	4	1 1/6	8	140	14	37
Henderson No. 1	Gold Creek, Mont.	600	2.0	Cast-iron	3	1 1/4	4	5	200	40	12
Henderson No. 2	do.	150	4.0	do.	3	1 1/4	4	5	320	64	8
Wisconsin Gulch	Sheridan, Mont.	2,800	0.1	40-lb. rail	1 7/8	3 1/2	30	6 1/4	283	13	37.5
Stemwinder	Superior, Mont.	180	1.3	Pole	4	4	5 1/2	.....	300	50	9
Diamond City	Townsend, Mont	900	0.6	do.	5	5	6	6 1/2	350	70	10
Superior	Superior, Mont.	.....	.....	Block	.....	7	.....	.....	560	70	12
Hackensmith	Leesburg, Idaho	150	1.6	Pole	4	4	2 1/2	5	80	40	10
Golden Rule	Warren, Idaho	.....	.....	do.	2	6	2	4 2/7	110	37	12.5
Fortune	Kokomo, Colo.	.....	.....	Rail	1 3/16	2 3/8	12	4 1/2	440	73	8.5
Dodman and Weston	Breckenridge, Colo.	400	0.8	Cross	2	4	2 1/3	4 3/4	104	52	8
Round Mountain	Round Mtn., Nev.	400	.....	Rail	2 3/4	2 3/4	12	4 1/2	240 to 880	.....	.....
Redding Creek	Douglas City, Calif.	1,200	0.5	Hungarian	2	4	4	4 1/2	540	25	7
Browning	Leland, Oreg.	900	0.7	Cross	2	4	4	.....	667	111	6
Llano de Oro	Waldo, Oreg.	1,300	.....	Rail	.....	.....	20	.....	400	57	8
Platurica	O'Brien, Oreg.	650	0.9	Block	.....	6	2 5/6	.....	500	55	8
Davis	Centerville, Idaho	240	0.5	Hungarian	1	1 1/2	2 1/2	2 1/2	64	16	27
Gallis	Sawyer's Bar, Calif.	325	.....	Angle-iron	2	2	2	.....	200	37	17
Lewis	Galice, Oreg.	300	1.0	Rail	.....	.....	3	.....	106	48	10
Conners	Bridgeport, Oreg.	28	1.7	Pole	3	3	6	4	18	6	93
Eldorado Bar	York, Mont.	360	1.4	Block	4	4	4	4	500	41	29
Old Garden Gulch	Centerville, Idaho	400	0.4	Angle-iron	2	2	2 1/2	4	160	27	38

a Includes mining.
b Exclusive ditch repairs, clean-up, supervision.
c Includes 2¢ for storage of tailing.
d Excludes general administration.
e Includes water for hydraulic elevator.
f Includes water for giant at Ruble elevator.

Hydraulicking is used when the deposits are large, lie well above the point of tailing disposal, and there is an abundance of water available under sufficient pressure. The method consists in cutting down the gravel and washing it through bedrock sluices and wing dams to the head of the sluice line by means of GIANTS or MONITORS, which are large (1- to 10-in.) nozzles operating under high pressure (50- to 400-ft. head). It competes with ***Dredging*** on a man-duty and cost basis, and is superior as a method with gravels containing much clay or many large boulders. Various types of elevators are used at the head of the sluice line when, as is frequently the case, the necessary slope and tailing-disposal room cannot be obtained otherwise. For mining details see *Peele*.

Hydraulicking requires a soft, even bedrock. The duty of water is usually stated as the number of cyd. of gravel that can be broken down and put through the sluice per miner's inch in 24 hr. This varies with the character of the deposit (depth, lie, tightness of gravel, size and number of boulders, character and grade of bedrock), the construction and arrangement of the sluice line (size, slope, riffling), the quantity of water available and the pressure, and the skill of the operator. The average for medium gravel, according to *Wimmler*, is 1 to 2 cyd., falling to 0.25 in unfavorable cases; if it is not necessary to elevate feed or to stack tailing, the duty rises to 3 to 4 cyd. on average gravel. Duty is low, if pressure is less than 80 to 90 lb. per sq in.

Sluices for hydraulicking are of large cross-section to handle boulders and the concomitantly large water flows. They must be made of heavy lumber, sturdily braced to withstand the shock of the rolling boulders (20-in. occasional max., if plenty of water is available; 6- to 8-in. common), and durably riffled. Block, rail, cast-iron and/or rock riffling are normally used in the main line, where wear is high; pole, angle-iron, and Hungarian riffles are used in the undercurrents. (See Sec. 11, Art. 26.)

Performances. Details of sluice lines and sluice operations are given in Table 41. Hydraulicking has worked gravels with 3¢ recoverable gold per cyd. at a profit. *Wimmler* reports average Alaskan costs as 30 to 35¢ per cyd. with a range from 6¢ to $1, but asserts that cost will not ordinarily fall below 20¢ for bench gravels or 25 to 30¢ for creek gravels. Cost of pump hydraulicking in the Nechi River section in Colombia (1938–1941) is reported to average 21¢ per cyd. (*143 #6 J 51*).

For water consumption see Sec. 11, Art. 26.

Mechanical mining is used for low-lying deposits and for high-lying deposits with insufficient water available for use as an excavating and disintegrating means. Under such circumstances transportation of feed and tailing becomes an important item, and disintegration and the separation of coarse oversize are thrown on the concentrating plant.

Methods involving mechanical mining may be classified into: (1) open-cut work; (2) drift mining; (3) dredging.

Open-cut gravel mining may employ any one of the usual animal or mechanical methods of excavation from slip scraper to power shovel, any of the ordinary methods of bulk transport, and the washing and concentrating plant itself may be either fixed in position or perambulatory. FIXED PLANTS have the advantages that crowding and limitation in size

Legend for Fig. 41:

1. Grizzly. Aperture depends upon the character of the gravel and that of the subsequent plant; it will be as small, down to 1 1/2- or 2-in., as will yield clean boulders as oversize.
2. Revolving-screen washer. Aperture and, consequently, the size for a given capacity depend on the method of concentration to follow.
3. Slime or other gravity concentrator, *e.g.*, a jig (Sec. 11).
4. Clean-up (see Sec. 11, Art. 26).

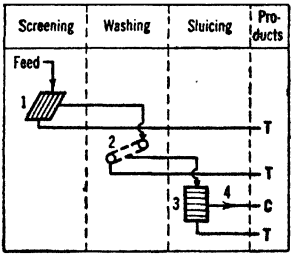

FIG. 41. Typical flowsheet for an open-cut or drift-gravel gold-washing plant.

and weight of apparatus are unnecessary, and that stability of setting and accurate alignment of apparatus are possible. The disadvantages are the probable necessity for mechanical transport of feed and tailing. MOVABLE PLANTS may have the advantage of standing on or over and discharging tailing onto worked-over bedrock, in addition to saving transport of feed, but they must be kept light in weight and are frequently correspondingly flimsy and expensive in upkeep; unforeseen rolls in bedrock may make moving and leveling-up slow and costly; storage must be sacrificed, with consequent delays and irregular feed to the concentrators, and water connections must be broken, extended and remade at each move. When used they should, of course, be started at a low point on the bedrock and be moved upslope to permit stacking tailing on worked-over adjacent land. A characteristic flowsheet is given in Fig. 41.

Performances at a number of plants in the western United States are given in Table 42.

Table 42. Performances at placer mines using mechanical excavators (other than dredges) (*After Gardner and Johnson, IC 6788*)

Name	Robbins	Scott and Case	Roberts	Delaney	McElroy	Mammoth Bar	Yellow Nugget	Heine	Grant Rock
Location	Vernal, Utah	Douglas Co., Nev.	Folsom, Calif.	Wenatche, Wash.	Princeton, B. C.	Auburn, Calif.	Hereford, Oreg.	Centerville, Idaho	Fresno, Calif.
Gravel: Character	Easy	Easy	Loose	Easy	Med.	Easy	Tight	Med.	Easy
Thickness, ft	4	4	*a*	6	6	30	8	6	30
% >8-in. boulders	0	.....	0	5	10	3	5	0	5
% clay	0	3	0	0	0	0	0	.....	0
Bedrock	Clay, soft	Soft	None	None	None	Hard	Clay, soft	Granite, easy	Volc. ash, soft
Excavation, method	Slip scraper	Slip scraper	Tractor scraper	Hoist scraper	Hoist scraper	Headline scraper	Power shovel	Power shovel	Dragline
Transport to concentrator:									
Method	do.	Truck	do.	do.	do.	do.	Truck	Truck	Locomotive
Distance, ft	25	18,500	300	20	50	300	2,000	400	2,000
Plant: Stationary (S) or movable (M)	S	S	S	S	S	S	S	S	S
Guard grizzly, aper., in	1/16 × 1/4	.....	2	3 × 3	3 1/2	4	6 1/2	None	None
Washer: Type	None	None	None	None	None	None	None	None	.....
Diam. × length, ft	.....	.....	.....	.....	.....	.....	.....	.....	.....
Aperture, in	.....	.....	.....	.....	.....	.....	.....	.....	.....
Speed, r.p.m	.....	.....	.....	.....	.....	.....	.....	.....	.....
Concentrator: Type	Sluice	Sluice	Sluice	Sluice	Sluice	Sluice	Sluice	Sluice	Sluice
Width, in	14, 8	10	12	20	18	18	18	32	30
Length, ft	20	48	110	128	48	36	40	125	50
Slope, in. per ft	1 1/4	.....	1 3/8	1/2	1	3/4	1	3/4	2/3
Riffles: Type	Screen on burlap	Screen	Hungarian on screen on burlap	Pole on screen on burlap	Pole, Hungarian, screen on cloth	Angle-iron	Rail, longit.	Rail	Hungarian
Size, in	.....	.....	1 × 1	1 1/4 × 2	3 rd. | 1 1/4 × 1	1 1/4 × 1 1/4	1 × 2	1 3/4 × 2 5/8	1 1/4 × 1
Spacing, in	.....	.....	2 3/4	2 1/2	4 | 2 1/4	2 1/4	3	4 1/4	2 1/2
Tailing disposal	Hand	Car	Tractor	Scraper	Scraper	Scraper	Gravity	Hand	Elevator *b*
Water, miner's in	.....	.....	.....	.....	.....	82	80	380	.....
Capacity, cyd. per hr	0.8	2	2.5	3.8	7.5	12	16	50	330
Costs (1932), $ per cyd.:									
Excavation	0.48	.....	0.40	0.39	0.16	0.16	0.12	0.20	.....
Transport	.....	.....	.....	.....	.....	0.05	0.09	*e*	.....
Washing and concentrating	0.46	.....	0.17	0.17	0.11	0.04	0.07	0.02	.....
Total	0.99	1.50	0.62	0.56	0.36	0.36	0.39	0.29	0.18

Name	Skull Valley	Forbach and Easton	Mystic	Haag	LaCholla	Bernrose	Grand Hills	Kumle	Sumpter
Location	Kirkland, Ariz.	Kirkland, Ariz.	Mystic, S. D.	Randsburg, Calif.	Quartzite, Ariz.	Breckenridge, Colo.	Custer, S. D.	Oregon House, Calif.	Sumpter, Oreg.
Gravel: Character	Med.	Med.	.....	Very tight	Tight	Easy	Easy	Easy	Tight
Thickness, ft.	8	3	30	.....	11	15	13	15	13
% >8-in. boulders	0.5	0	.....	15	1	5	0.5	5	10
% clay	.....	15	.....	10	.....	0	0	0	3
Bedrock	Clay, soft	Clay, soft	Slate	Clay, soft	Clay, soft	Soft	Soft	Porphyry, soft	Volc. ash, soft
Excavation, method	Power shovel	Power shovel	Power shovel	Power shovel	Dragline	Power shovel	Power shovel	Steam shovel	Dragline
Transport to concentrator:									
Method	Truck	Truck	Truck	None	None	Elevator	None	None	None
Distance, ft.	2,500	2,600	.....	None	None	None	None	None	None
Plant: Stationary (S) or movable (M)	S	S	S	M	M	M	M	M	M
Guard grizzly, aper., in.	None	6	7×7	8	9×9; 3	None	None	1/2	None
Washer: type	2 trommels	2 trommels	Trommel	Trommel	Trommel	2-jacket trommel	Trommel	None	Trommel
Diam. × length, ft.	4×9 3×8	4×9 3×6	3 1/2×6	4×22	5 1/2×8	3 and 4×14	5×21	.....	4×24
Aperture, in.	1/4×1/8	1/4×1/8	1/8×5/8	5/16 and 3/4	3/4	0, 1 1/4, 1/8	0, 1/4, 3/8, 1/2	.....	1/2
Speed, r.p.m.	24	21	21	.....	.....	9	11	.....	.....
Concentrator: Type	4 shaking tables	4 shaking tables	Shaking sluice | Sluice	2 sluices in parallel	2 sluices in parallel	4 centrif. bowls	4 centrif. bowls	2 sluices in parallel	Sluices in parallel
Width, in.	.....	.....	48 | 25	30 | 40	14	.....	.....	27	30
Length, ft.	.....	.....	4.3 | 9	30 | 8	40 ea.	.....	.....	30 ea.	900 sq. ft.
Slope, in. per ft.	.....	.....	1 1/2	.....	5/8	.....	.....	1 1/2	.....
Riffles: Type	.....	.....	Cross	Rubber	Cross pipe	.....	.....	Hungarian	Hungarian
Size, in.	.....	.....	2×2	3/8×1/2	2 O.D.	.....	.....	1 1/4×1	1 1/4×1
Spacing, in.	.....	.....	6	7/8	3	.....	.....	2 1/4	2 1/4
Tailing disposal	Belt *c*	Belt *c*	Truck	Belt *c*	Belt	Belt *c*	Belt *c*	Belt	Belt
Water, miner's in.	10 *d*	22	.....	16 *d*	9 *d*	17	22	.....	2,000
Capacity, cyd. per hr.	11	15	30	6	50	20	40	28	40
Costs (1932), $ per cyd.:									
Excavation	0.10	0.08	.....	0.55	0.07	0.06	0.04	0.08	0.06
Transport	0.13	0.12	.....	.....	.....	.....	.....	.....	.....
Washing and concentrating	0.11	0.12	.....	0.42	0.08	0.08	0.06	0.03	0.08
Total	0.54	0.54	0.25	1.30	0.24	0.18	0.16	0.18	0.18

a Tailing pile. *b* To a crusher for crushed-rock market. *c* Boulders by hand. *d* Net. *e* Included in excavation.

It should be noted that scrapers are adapted only to large areas of shallow gravel, with few boulders, and either soft bedrock or, if hard, smooth and uncreviced. Under the best conditions power and labor consumptions are high, the set-up is expensive, cable wear and general repairs are high, and capacity is low. A SELF-DUMPING BUCKET on a carrier cable with a power hoist is useful on shoveling-in operations where sluice moving is undesirable. The COST is about the same or somewhat greater than for ground sluicing (*Wimmler*).

Drift-mining involves more or less elaborate underground excavation of gold-bearing gravel and, usually, the surface of the bedrock. Excavated material, delivered at the mouth of a shaft or tunnel, is transported to a washing plant similar to that used for open-cut material, except that where high-pressure water is available, disintegration may be done with a small giant in a wash box or on a grizzly, and that, with hard cemented gravel, mechanical crushing may be used (Fig. 43).

Vallecito Mining Co. Fig. 42 (*IC 6612*).

Location: Angels Camp, Calif.
Ore: Cemented drift gravel.
Assays: Feed, $8 Au per ton ($20.67 Au); tailing $0.17.
Capacity: 15 tons per hr.
Water: 500 gal. per ton gravel; about 300 gal. for sluicing, 200 gal. for transport of tailing.

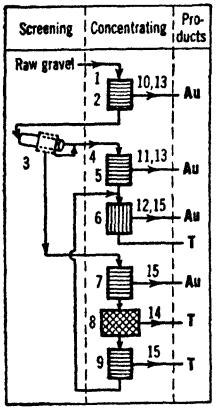

Legend for Fig. 42:

1. 75-ton bin. Gravel washed out with water from a 2-in. line at 25 lb. pressure.
2. 16-in.×11-ft. sluice, Hungarian riffles. Slope, 2 i.p.f.
3. 3×18-ft. wash trommel. First 8 ft. blank with 4-in. angle-iron lifters. Discharge end concentric, 1 1/2-in. and 3/8-in. rd.-hole plate. Slope, 1/2 i.p.f., 28 r.p.m., 10-hp. motor.
4. Water from a 6-in. line at 25-lb. pressure.
5. Sluice, 16-in.×6-ft., Hungarian riffles; slope, 1 1/2 i.p.f.
6. 12-in.×100 ft. of pole riffles, made of 8-lb. steel rails; slope, 1 1/4 i.p.f.
7. 16-in.×4 ft. of Hungarian riffle; slope, 1 1/2 i.p.f.
8. 3 1/2×6 1/2-ft. screen table, 1/4-in. heavy-wire screen in bottom; slope, 1 1/2 i.p.f. No mercury.
9. 32 ft. of Hungarian riffle baffled by 2 @ 12×6-in. baffle plates at 20 ft. Slope, 1 1/2 i.p.f. above, and 1 1/4 i.p.f. below baffle plates.
10. All coarse Au, 60% of total Au.
11. Most of balance of recovery here.
12. Occasional large nuggets, small amount of fine Au.
13. Cleaned twice a week, daily if feed is unusually rich.
14. Cleaned about once a month.
15. Cleaned every 6 or 8 mo.

FIG. 42. VALLECITO MINING CO.

Mayflower Gravel Mining Co. Fig. 43 (*IC 6788*).

Location: Forest Hills, Calif.
Ore: Cemented drift gravel from several mines. Boulders coated with clay containing gold.
Capacity: 180 tons per 24 hr.
Recovery: 95%.

Legend for Fig. 43:

1. 150-ton bin.
2. 5×12-ft. grizzly, 1 1/2-in. spaces.
3. Sorting table.
4. Clay-coated boulders.
5. 3×16-ft. wash trommel with lifter lugs and rows of 1/4-in. holes at 8-in. intervals.
6. Belt conveyor.
7. 48 ft. of 12-in. sluices; slope, 1 1/2 i.p.f.; 1×3-in. cross riffles set flat, spaced 2 in., those in first box covered with 1/4-in. wire screen.
8. Cemented gravel. Fed by hand.
9. 12-in. jaw crusher.
10. 75-ton bin.
11. 9 @ 1,200-lb. stamps in 3 batteries. 1/4-in. screens. 107 @ 7-in. drops per min. Mercury added to mortar. 85% of gold recovered here.
12. 3 @ 6×12-ft. amalgamating plates with mercury traps.
13. 96 ft. of 12-in. sluice; slope, 1 1/2 i.p.f.

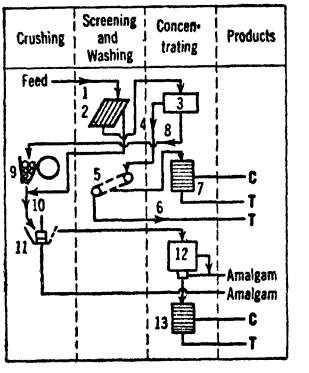

FIG. 43. MAYFLOWER GRAVEL MINING CO.

Costs. *Wimmler* states that the cost of sluicing at Alaskan drift mines is 15 to 45¢ per cyd.

21. DREDGING

General. Dredges are a combination of an elevating excavator, a gold-concentrating plant, and a tailing-disposal plant, all mounted on a barge. They float in natural bodies of water, or in self-excavated ponds which they enlarge ahead and fill in behind as they work successive horizontally parallel substantially vertical slices of gold-bearing ground. They are used for gravel deposits, such as those in wide valleys, that lie below any level available for the gold-saving plant. The gold in such deposits is usually fine. *Janin* reports the following sizing test on Oroville gold:

Screen, mesh.....	>60	60~100	100~120	120~150	<150
Weight, %.....	58.1	15.3	2.9	2.4	21.1

and states that it is about the same size in other California dredging fields, with only an occasional nugget ranging in value from 50¢ to several dollars ($20 gold). He gives also a sizing test on Montana gold that falls in the same size range. The most desirable type of gravel is one that contains 50% upward of <1/2-in. fines with clean coarse cobbles and a few medium-size boulders to aid in disintegration by tumbling action in the screen. Efficient dredges for inland gravels are large and costly apparatus ($50,000 to $1,000,000) and are used, therefore, only when the gravel deposits are large. Operating costs are, however, almost unbelievably low (2.5 to 15¢ per cyd. excavated) and, under normally favorable conditions, recoveries are high, so that excellent profits can often be made out of gravels carrying less than 10¢ recoverable value per cyd. ($35 gold), provided the deposit is sufficiently large to spread amortization thinly. An average of 60 dredges worked in California alone over the years 1905 to 1915; about 20 more were operating by 1914 in Montana, Idaho, and Colorado, and 50 to 60 in Alaska. From 1922 to 1932 the average annual recovery on California dredges was from 8 to 10.7¢ per cyd.

Types of dredges. Dredges are classified on the basis of the excavating and elevating mechanism, and of the gold-saving and tailing-disposal devices. The relative simplicity

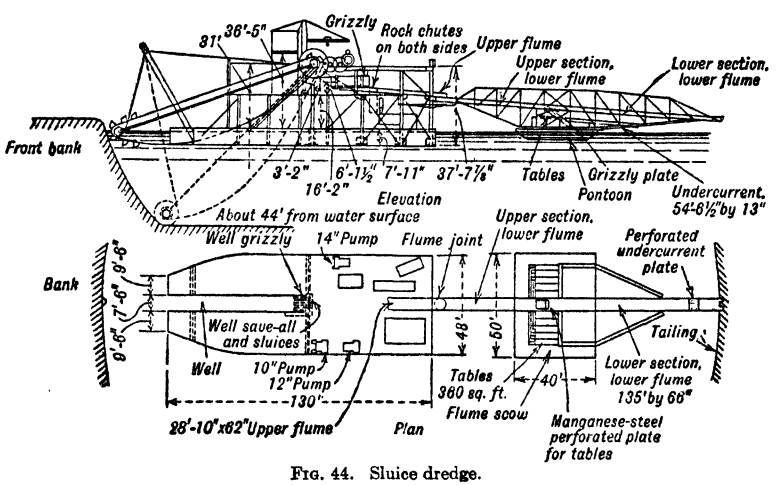

FIG. 44. Sluice dredge.

and cheapness of SUCTION DREDGES have caused the construction of at least one of this type in most of the placer gold fields of the earth, but their record of nonsuccess is almost perfect. POWER SHOVELS and CLAM-SHELL or ORANGE-PEEL BUCKETS as dredge digging mechanisms have had limited success in small shallow nonbouldery deposits with soft bedrock. But as a practical matter, the continuous bucket line carried on an endless chain suitably mounted is almost universally employed as the digging and elevating mechanism today. The SIZE of the dredge is indicated by the capacity of the individual buckets. The usual range is 3- to 16-cu. ft. One of 20-cu. ft. has been built. Digging depths average 30 to 40 ft. below pond level, with 120 ft. the maximum reported; stackers on large dredges may deposit 100 ft. above pond level. Digging capacities are given in Table 43. *Wimmler* states that the capacity of Alaskan dredges ranges from 20 to 60% of the product of bucket capacity and buckets per min., and averages 40 to 45%. Running time is 75 to 80%. The

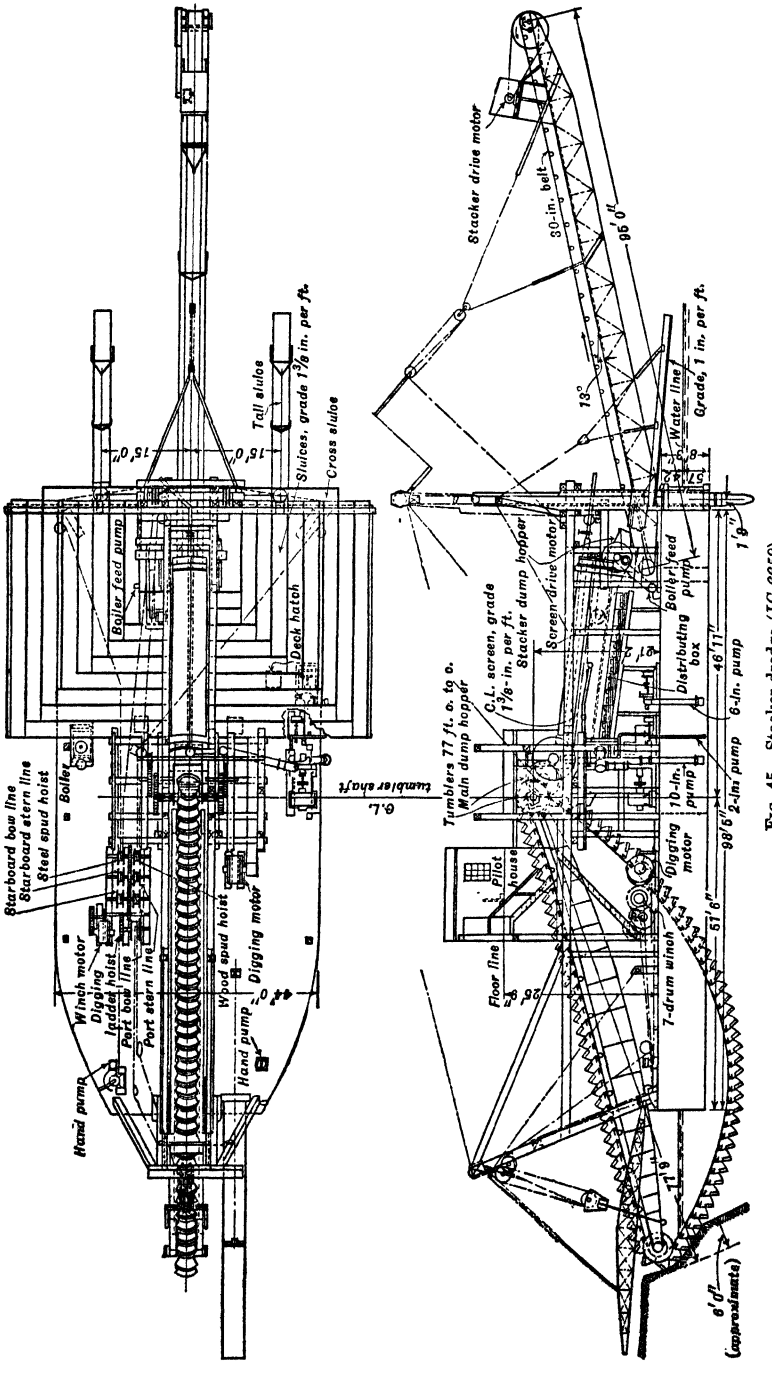

FIG. 45. Stacker dredge (*IC 6659*).

bucket line, its drive, and the support of the loads that it imposes are by far the most expensive parts of a dredge, both in first cost and in operation. Details are beyond the scope of this book. See *Peele;* Gardner and Johnson, *IC 6788;* Jennings, *Bul 121 USBM; Janin.*

Table 43. Digging capacities of bucket dredges (*56 CMJ 106*) *a*

Buckets, cu. ft...	3	4	5	6	7 1/2	10	13 1/2	15	18
Thousands cyd. per 24 hr.....	2 to 2.5	3 to 3.5	3.5 to 4	4 to 4.5	5 to 6	7.5 to 8.5	8.5 to 10	10 to 12	12 to 15

a Capacities are based on average ground 30 to 35 ft. deep, and 80 to 85% operating time; for easy ground increase 50 to 100%; decrease up to 50% for hard ground.

Principal gold-saving device on most gold dredges is some form of SLUICE, supplemented by AMALGAMATION. JIGS are used as auxiliaries on a number of dredges and as the principal gold saver on a few. They are particularly advantageous if the gold is fine or rusty or locked. A sluice or flume dredge (Fig. 44) is one in which the sluice serves also as the device for tailing disposal; its use is limited to relatively shallow deposits (12 to 15 ft.). A stacker dredge (Fig. 45) is one utilizing an elevating conveyor to dispose of the coarser tailing. Stacker dredges preponderate greatly on account of superior flexibility in tailing disposal and the greater sluice area possible. Sluice dredges are, and practically must be, used when the gold is coarse and nuggety, necessitating treatment of material up to 3- or 4-in. size.

Gold-saving plant on dredges comprises essentially a screen so operated as to disintegrate the gravel, if necessary, and to rough out coarse gold-free gravel; a sluice line to rough out and discard the bulk of the intermediate and fine waste in the screen undersize; a strake (unriffled main sluice) to effect primary cleaning of the rough concentrate from the main tables; a long-tom or small sluice for recleaning; and amalgamation, sometimes preceded by screening out coarse sand, for final separation.

Ultimate ratio of concentration in gold dredging is almost unbelievable. In a comparatively rich gravel, say one carrying 50¢ per cyd. of recoverable gold (at $35 per oz.), the volume of gold is only $1/40$ cc. and the volume of barren material to be rejected is 770,000 cc., giving an ultimate volumetric ratio of concentration of roughly 30 million : 1. The screen roughs out approximately half of the tailing in normal California gravels; the table riffles will hold about 350 cu. ft. of concentrate, which constitutes, say, a 600 : 1 ratio. Clean-up on the tables involves about 5 : 1 reduction in bulk. A small sluice treating this material will cut it down 200 to 500 : 1. Screening the concentrate makes about a 2 : 1 shrinkage in bulk, leaving the balance for amalgamation.

Detail of Gold-Saving Plant

Hopper. The bucket line discharges into a hopper, which constitutes a feeder for the screen. With cemented and clayey gravels disintegration starts in the hopper through the medium of a high-pressure jet or monitor played on the material therein.

The hopper should fit with minimum clearances around the sides and front of the bucket line, be fitted with adequate splash boards, and the lead-out chute should be so placed as to maintain a layer of gravel on the bottom to resist wear. Worn bucket pins are commonly used for liners. With sticky gravel, high-pressure jets must be used to discharge the buckets and wash off the sides, in which case the splash boards must be carried over the front and as far as possible down the ends of the hopper. On NATOMAS No. 8, the use of 90-lb. water on the head of the digging line increased digging capacity 50 cyd. per hr. and saved digging power.

Grizzly. With much coarse, bouldery material and a deep pond, a grizzly is placed over the feed hopper; the oversize therefrom passes over the sides of the boat.

Screen is placed in the upper part of the boat superstructure to take the discharge of the bucket line. Screens are almost universally of the rotary type. Shaking screens have been used, but they are not effective disintegrators and are structurally bad on account of the heavy oversize burdens that they must carry.

Rotary screens for dredges are cylindrical, of roller type (Sec. 7, Fig. 29), and of exceptionally heavy construction. The essential structural elements are the frame, the support, the drive, the covering, and the housing.

Frame consists of two circular end castings with a plurality of longitudinal members, usually six, connecting them and forming with them a symmetrical polygonal truss of diameter somewhat greater than that of the screening surface. In the older forms the longitudinal members were usually heavy angles bolted to the heads and braced against the driving torsion, either by heavy gusset plates or by lacing adjacent angles together to form girders. In modern forms welding is substituted for bolting, and some manufacturers have substituted tubes for the angles. The rings to carry the screen plates are fastened at suitable intervals to the longitudinal members; when welded joints are used these rings add great additional stiffness to the frame.

Support must accommodate to the reception of feed, the discharge of undersize and oversize products, and admission of wash water; and must take up the thrust incident upon setting the frame axis at an angle to the horizontal. This requires that the feed head, at least, be open and, therefore, roller-supported. The discharge end may also be open, in which case roller support is necessary here also; or it may be a circular plate, spaced far enough from the end of screen surface to permit discharge of oversize between it and the screen lip, in which case this end is usually supported on a bearing. Tires and rollers are of alloy steel; when tire support is used both ends, a thrust roller must also be provided. Splash rings are used to protect both tires and rollers from grit, and water sprays are used at the rollers additionally to eliminate grit that has evaded the splash rings. Support should be on steel; alignment cannot be maintained on wood.

Drive is either by roller or by gear, and, in the former case, may be at either end. It is more accessible and less subject to splash when at the lower end, but roller traction is less and torsion is greater. A single drive roller, placed either directly under the axis or just off center, is usually considered best; uneven wear occurs when two drive rollers are employed. Drive gears are beveled, cut, carefully faced, and truly bolted to the drive head. The drive problem is similar to that with tumbling mills (Sec. 5, Art. 4).

Speed ranges from about 160 f.p.m. peripheral for small screens to 200 f.p.m. for large.

Screen plate is made of high-carbon steel with drilled holes or of cast manganese steel with cast holes. Plate is usually from 3/4 to 1 in. thick. BRIDGES (metal between holes) vary according to requirements for total aperture area, but rarely are less than the thickness of the plate. Manganese-steel plates normally give two to three times the wear of high-carbon steel. Holes taper outwardly about one in four. Segments are rolled or cast to the proper radius and bolted to the longitudinal members. LINERS for blank jackets are best made of castings about 6 in. wide, of the thickness desired but not less than 1 in., and of a length permitting relative ease in handling. LIFTER BARS are usually rectangular, with sufficient base to guard against overturn; they are spaced 9 to 12 in.; projection is normally too little to effect cascading. Bars are shifted when the intervening screen wears. Peripheral wearing plates at the retarding rings save the screen plate from the excessive wear at these points.

Wash water is introduced through nozzles from a header which may run the length of the screen inside, or across both ends. With gear drive the bearing may be made of trunnion type to permit entry of the SPARGE PIPE (spray header) from the discharge end, which removes obstruction from the feed end. Longitudinal headers have 1- to 2-in. nozzles spaced 12 to 16 in. Smaller nozzles clog with debris from the pond, and likewise decrease impact of the stream because of the tendency to spray the jet. End-placed nozzles are usually 2-in. and differently directed to distribute the washing effect. They are less effective than those longitudinally placed, but offer less obstruction to repair work. WATER PRESSURES are ordinarily between 25 and 75 lb. per sq. in.

Slope of screen is usually about 1 1/2 in. per ft.

Distributor. The distribution of screen undersize to tables or jigs is one of the important elements in dredge construction and operation. The principal desiderata are: (*a*) equal loading of tables, having consideration for gold content, volume of gravel, and area and length of table; (*b*) uniformity of feed, both as to solid and water tonnages and to particle sizes; (*c*) accessibility; (*d*) simplicity of operation; and (*e*) minimum head loss. The problem is generally considered less serious in feeding tables than in feeding jigs. The simplest form of distributor comprises a series of transverse partitions in the bottom of the screen housing, with spouts from the compartments thus formed discharging alternately to port and starboard. A slightly more elaborate variant of this is a longitudinal divider, usually shifted somewhat toward the upcoming side, which is designed to halve the discharge at any longitudinal section and permit closer spacing of the outlet spouts on each side. Spacing of the transverse dividers is proportioned so as to give the desired tonnages, bearing in mind that discharge from the screen decreases, nonuniformly but regularly, from head end to discharge end; and that the capacity of the following concentrators is dependent, more or less according to type, upon particle size of feed. With distributors of these general types, without gates on the discharge spouts, there is no method of regulating feed rate to different following apparatus except by major structural changes; they are simple and give minimum headroom loss but are substantially inaccessible, and completely dependent for uniformity on the uniformity of the gravel and water fed to the screen. By providing weir overflows from compartment to compartment, and by gate controls in the discharge spouts, some control of distribution may be effected, with corresponding improvement on the score of uniformity, but the improvement is not great. Romanowitz and Sawin (*26 # 12 MCJ 23*) state that recent decreases of some 33% in sluice area provided on modern dredges flows from better distribution, particularly as to size and pulp dilution.

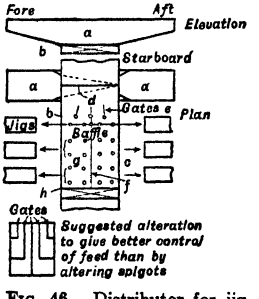

FIG. 46. Distributor for jig feeding.

When jigs are used, it is essential to optimum operation that the feed enter uniformly distributed across the width of the bed, and that the size of feed particle and the feed-pulp

dilution remain approximately constant. To effect this, there must be provision for controlled dewatering and some regulable device for controlling the direction and thereby the quantity of solid flow. Such a device is shown in Fig. 46 (*47 MM 119*), in which the screen hopper *a* slopes both ways to a discharge spout *b* near the longitudinal center, whence the pulp falls into a transverse settling box *c*, the amount of pulp going to port and starboard being controlled by a pivoted gate *d*. Gates *e* control flow along the settling box; a center baffle *f* prevents overloading fore or aft sides with variation in longitudinal tilt of the boat due to changing position of the digging ladder; and spigots *g* with variable aperture control discharge. A weir overflow *h* takes care of excess water, and, in combination with spigot diameter, determines the minimum size sent to the jigs. This arrangement is reasonably simple, is accessible, tends toward uniformity of feed, gives straight flow to the jigs with corresponding tendency toward uniform distribution across the width, but does lose headroom, and necessitates some re-elevation of feed to secondary jigs.

On the DE LAMAR dredge (*26 #3 MCJ 22*) the distributor was built like a Jones riffle (Sec. 19, Art 3) 28 in. wide by the length of the screen (28 ft.), with 6-in. slots discharging alternately on opposite sides. For other methods see *Janin*.

Design of screen. H. A. Sawin (Sales Eng'r, Yuba Mfg. Co., *PC*) states that his company has no general rules for design, but that the factors that must be considered are: (*a*) degree to which the gravel is cemented, (*b*) the amount and character of clay, (*c*) the percentage of fines, (*d*) the size and quantity of cobbles and boulders, taken in connection with the depth of the pond, and (*e*) the character and size of the precious metals. The more firmly the gravel is cemented the more tumbling it must be subjected to in order to effect disintegration; experience indicates, however, that length rather than diameter is the important factor in this respect. Clay requires puddling, which is effected by hold-back rings; a blank section at the head with hold-back ring may be desirable, if clay is in large lumps. The percentage of fines and the size of the gold particles govern perforated area and minimum diameter of perforations; Table 44 indicates that about one cyd. per hr. per sq. ft. of perforated area per in. of aperture is the usual allowance for loose and relatively clay-free gravels with a normal percentage of fines, while the yardage drops to half or less this with hard, clayey gravels where disintegration requirements become important. Apertures of $^3/_8$- to $^5/_8$-in. are usual for granular gold; the figure rises to 1-in. upward with nuggety gravel. With many large boulders, particularly in shallow ponds where dumping of boulders over the side would risk shoaling the boat, the boulders must be passed through the length of the screen and up the stacker. In this case screens are provided with perforated liner plates, installed in register with the perforations of the jacket; these have the effect of doubling the jacket thickness.

Table 44. Sizes of dredge screens (*After Janin*)

Bucket capacity, cu. ft.	3	5	7	9	16
Screen: diam., ft.	4	5	6	7	9
Length of perforated section, ft.	15	20	25	30	38
Motor, hp.	20	25	35	45	75

M. F. Keese (Bucyrus-Erie Co., *PC*) states that they design screens for the largest probable amount of undersize, and that the formula $D = 3.3\ C^{0.6}$, where D = diameter of screen in inches and C is total feed in c.f.m., holds. Length of perforated section is made approximately four times diameter.

The biggest screen reported was 9×50-ft., weighed 110 tons, and was driven by a 100-hp. motor. If gold is coarse, larger apertures must be used, and less screening surface is necessary. Frequently the holes at the head end are smaller, to distribute the load to tables more evenly. One dredge used 4 sizes of holes with satisfactory results. A Colorado dredge used one ring of coarse screen at the lower end to make certain that no nuggets slipped by, sending this fraction to a specially riffled sluice.

With much clay, disintegration becomes an important factor; a part of the length is blanked off and an annular ring placed at the lower end of it for tumbling the material in water; lifter bars cover a part of the screen surface, necessitating greater length to maintain total aperture area; hold-back rings may be put in the screening section also, where they have the effect of thickening the bed, with consequent decrease in screening rate per unit area of perforated surface. At GOLD HILL DREDGING Co., Loomis, Calif., gravel particularly hard to disintegrate is sent to a 10(diam.)×18-ft. ribbed cylinder preceding the screen.

Step screen is a rotary with several sections of decreasing diameter from feed to discharge end. It weighs less than the straight cylindrical rotary, and the steps act as hold-back rings with no fall on the downstream side, thus eliminating considerable wear. The concentration of weight at the head end gives more relative traction for head-end drive and less torsional strains on the screen frame. There is some saving in headroom. On the other hand, screen plates are not interchangeable, the structure is more complicated and less rigid than the one-diameter frame, and either more load is put on head-end tables or head is lost in distribution.

Shaking screen is used on some dredges. The 7 1/2-cu. ft. dredge at ADELONG GOLD ESTATES near Bright, Victoria, N. Z. (*37 CEMR 237*) uses such a screen, 8 ft. 9 in. wide × 35 ft. long, with 4-rod sus-

pension driven by an eccentric mounted above the transverse centerline of the screen, with two eccentric rods attached near each end of the frame. Slope of screen is 1 1/4 in. per ft.; speed, 70 @ 8 3/4-in. r.p.m. Two @ 11-in. longitudinal spray pipes are placed 4 ft. apart, with 1-in. holes 10 in. apart in staggered rows. Good disintegration is reported.

Tables are shallow, relatively steep sluices (slope from 1 to 1 1/2 in. per ft.) arranged in side-by-side banks on both sides of the boat. See Figs. 45 and 46 for two arrangements. Some form of Hungarian riffle (Sec. 11, Art. 26) is almost universally used. The tables are usually single-deck and of wood construction on the smaller boats (up to 7 1/2-cu. ft.); they are double-deck, steel on larger boats. Quicksilver is invariably used, special amalgam traps and riffles being provided on some dredges.

Average MERCURY CHARGE is close to 1 lb. per 2.5 to 3 sq. ft. of table area; LOSS ranges from 1 to 5%, averaging between 2.5 and 3%; it is highest on clayey feeds. TABLE AREA provided on some 50 dredges ranges from 6 to 17 sq. ft. per hourly cyd., or 150 to 400 (aver. 250) sq. ft. per cu. ft. of rated bucket capacity, according to the size and character of the gold. Keese (*loc. cit.*) states that Bucyrus usually allows approximately 8 sq. ft. of riffled area per c.f.m. to the dredge screen. Area may be approximately doubled on a given boat by installing double-tray riffles in the sluices. NATOMAS tests (*IC 6788*) indicate 90 ft. minimum LENGTH. Standard California WIDTH is 32 in. (*56 CMJ 106*). *Janin* estimates that 35 to 60% of the material dredged is undersize of the usual stacker-dredge screen; Lewis (*56 CMJ 106*) gives 50% <1/2-in. as an average for California gravels; it may run up to 80% on sluice dredges. SLOPE of transverse tables averages about 1 1/4 in. per ft.; longitudinal about 1 1/8 in. FEED RATE and WATER QUANTITY are dependently regulated to keep the sand between the riffle cleats fluid, on the well-substantiated theory that more gold is lost by inability to penetrate the inter-riffle spaces than by carriage in suspension. WATER is provided in such a way as to permit individual regulation of the supply to different tables. Sawin (*loc. cit.*) states 10 to 12 parts of water to 1 of fines by weight to be the customary provision with normal gravels; double this for very clayey gravel. Heavy wire net is placed around the high-grade parts of the sluice lines to prevent pilfering. Sawin (*loc. cit.*) states that sluice or table width rather than area is the important factor in table design, and that YUBA No. 20, designed on this principle, riffles only the athwartship tables, which discharge into two unriffled longitudinal sluices, the sole function of which is to discharge tailing. Distribution is arranged to permit athwartship tables well aft the end of the screen. This arrangement eliminates the practice of discharging 2 or 3 athwartship sluices into the longitudinal, with consequent overloading of the latter.

Sluices on sluice dredges are 24 to 48 in. wide, 60 to 100 ft. long, slope 1/2 to 3/4 in. per ft., and are more coarsely riffled than tables, *e.g.*, 2- to 3-in. angles. Undercurrents are usually used as supplements. See Sec. 11, Art. 26.

Save-all is a small sluice placed under a grizzly (about 2-in. average aperture) in the well of the boat. It receives the undersize of the spill from the head of the bucket line. Slope must be steeper than the main tables since more material must be handled per unit area and feed is coarser. GRIZZLY should be easily maintained, *e.g.*, individual bars in a comb rack. The entire save-all construction is protected against a bucket-line fall by heavy transverse girders. The save-all may recover much or little, depending upon the ladder slope, bucket and hopper design, the character of the gold, etc. Lewis (*loc. cit.*) cites 4 to 400 oz. recovery in the same length of time on different boats.

Jigs replace tables in some dredges and are used on others to supplement them. Their use started on tin dredges. Both pulsating and reciprocating types are used. They are especially effective for very fine gold, gold that is hard to amalgamate, or gold associated with heavy-mineral sands which pack in riffles.

On a NATOMAS dredge jigs (Sec. 11, Arts. 7 and 8) were placed in the first four table lines on both sides of the boat. These jigs made about 40 tons concentrate averaging $0.75 to $1.50 per ton per day from each side of the boat, constituting about 75% recovery on jig feed and a saving of 1 to 2¢ per cyd. of original feed to the boat. Concentrate was reground in Hardinge pebble mills and amalgamated.

On the DE LAMAR dragline dredge (*26 #3 MCJ 22; 139 #7 J 50*) <1/2-in. gravel at the rate of 12 to 24 cyd. per hr. with 2,950 g.p.m. of water was sent to 2 @ 4-cell 42-in. Placer jigs (Sec. 11, Art. 7) in parallel (one each side). Stroke, 1 3/4 in.; 120 r.p.m.; bed 3/16- and 1/4-in. steel shot, and coarse concentrate allowed to build. Rough concentrate (70 : 1 ratio of concentration) from both sides was combined and dewatered in a 2×5-ft. drag classifier (slope 45°, 47 f.p.m.) and sent to a 2-cell 12×12-in. Crangle hydraulic pulsator cleaner jig, bedded with 1/4- and 3/16-in. shot and coarse concentrate and making 200 pulsations per min. Ratio of concentration on these jigs was about 1,000 : 1. Concentrate passed continuously to a Titan amalgamator (Sec. 14, Art. 7), and the tailing thereof to 1 @ 1-cell 12-in. Crangle jig which recovered a small amount of rusty gold and amalgam and discharged tailing to shipping concentrate. Tailing from the cleaner jig passed to a dewatering cone and thence to a 4-cell @ 9-in. Placer-type scavenger jig making 240 @ 1-in. s.p.m., bedded with 1/4- and 3/16-in. shot, coarse garnet, sulphide, and cassiterite concentrate. The jig made a concentrate, mostly garnet, which, with that from the safety jig, assayed more than $40 per ton. Use of this cleaner scavenger was novel on this boat. Cost of jig operation (1937) was 6.7¢ per cyd.

The jig installation on this boat replaced sluices which had not made satisfactory recovery on account of the considerable amount of old amalgam and mercury from the gravels from prior working.

The KISTER dredge at Oroville (*Min. Wld., Seattle, 9/39*) was equipped with jigs after the usual sluice equipment had failed to recover gold indicated by sampling. The equipment comprised 2 @ 2-cell 42-in. rougher jigs each side with tailing discharged over 12 ft. of riffled sluice to the tail sluice. Com-

bined rough concentrate was elevated by pump, dewatered in a pyramidal sand tank and fed to 2 @ 24-in. 2-cell Pulsator jigs, discharging tailing over burlap tables, and concentrate which was amalgamated continuously in a Titan amalgamator, the reject from which passed to a 2-cell 12-in. Pulsator jig which discarded tailing over burlap tables, and returned concentrate to the amalgamator.

Sawin (*PC*) comments that while there are placer sands that are better handled on jigs than tables, the former have the present disadvantages that they require a different skill to operate than is usually found around placer fields and that they therefore require more labor; that they lose efficiency when under- and overloaded; that they develop dead spots which, of course, decrease efficiency; and that, because of their sensitiveness to load conditions and the usual ignorance at the time of dredge design as to the exact fraction of the daily yardage that will go through the screen, design involves a correspondingly large element of guesswork. Jigs require less water than sluices. Plunger jigs on VICTORIA, N. Z., gravels have given much higher recovery than sluices, probably on account of the fineness of the gold (*31 CEMR 5*). Arguments put forward in favor of jigs are: Once a particle is caught in a jig it cannot thereafter be lost, whereas it may be washed or splashed out of a riffle. A jig saves more black sand; if black sand is used as an index of efficiency, jigs far surpass riffles. Final concentrate from jigs contains no light sands; there is considerable in riffle concentrate, making a greater quantity of concentrate to clean. Riffles must be shut down for a clean-up; jigs discharge while operating. Jigs are particularly advantageous for clean-up concentration. It is to be noted that the high ratio of concentration in roughing both on jigs and tables is bad practice generally, and that improvement in placer recoveries is most likely to come by way of a treatment scheme that breaks the present roughing step on screen undersize into at least two steps. A start in that direction is made on the new NATOMAS dredge (*A TP 792*), which has 8 @ 42×42-in. Bendelari jigs each side of the screen and makes rough concentrate at a 25 : 1 ratio of concentration, tailing going to sluices for scavenging while concentrate goes to cleaner jigs and thence to grinding and amalgamation. Cleaner-jig tailing goes to mercury riffles and thence to waste. The jigs treat 12 cyd. per hr. each. The latest YUBA (California) dredge has all jigs except for a short sluice following the screen.

Flotation was tried by Leaver and Wolf (*A TP 792*) on a variety of products as follows: Backwash sands assaying 17.5¢ per ton from TRINITY DREDGING CO.; original gravel, assaying 49¢ per ton; pond slime, $1.12 per ton; fine-sand portion of tailing, 38¢; cemented boulders after grinding and screening, 52¢; sand-bucket tailing, 39¢; <6-m. material from sand-bucket tailing, 22¢; tailing from belt sluice, 33¢; all from GOLD HILL DREDGING CO.; quartzitic portion of tailing @ 91¢ and regular tailing @ 9¢ per ton from FAY dredge; tailing from riffles re-treating jig concentrate, assaying 39¢, from NATOMAS; and waste backwash from YUBA No. 17 assaying 14¢ per ton. Recovery ranged from 12% on GOLD HILL pond slime to 76% on the TRINITY material, using amyl xanthate, Aerofloat, and pine oil or cresol. Ratio of concentration ranged from 35 to 50 : 1. The results were not promising; the effect of return of reagent in recycled pond water might well harm amalgamation.

Clean-up interval varies with the character of the gold and the gold content of the feed. On large dredges it is 7 to 10 days for the main tables, with the side sluices cleaned up every other time. The time required for a clean-up is 4 to 8 hr. The method varies in detail, but essentially involves preliminary concentration to about 20 to 25% of bulk in the sluice, stripped progressively from the head end, and final clean-up in a long-tom or small sluices fitted with some form of screen over fabric. At YUBA the sand concentrate is screened at 8-m. and the undersize, in charges of 1,000 lb., with 20 lb. Hg, 1/4 lb. KCN, and 80 gal. water is milled 2 hr. in a barrel and then washed to the clean-up sluice. The cyanide aids amalgamation and prevents flouring. With it there is a gain of about 10 lb. of mercury per 100 tons of sand against a loss of 20 lb. without it. At RUBY a special clean-up box 3 ft. long by 18 in. wide by 15 in. deep, sloped 1 1/2 in. per ft., is divided into four compartments by downwardly projecting baffles extending to within 3 in. of the bottom. Three upwardly projecting 3 1/2-in. baffles, placed one at the lower end and one in each of the two center compartments form mercury traps. All rough concentrate from the main sluice is fed through this clean-up box, and in flowing under the downwardly projecting baffles is forced into the mercury pools. Tailing passes to the main sluice through a small sluice fitted with expanded metal on coco mat.

Table 45. Relation between width and capacity of dredge stackers

Bucket capac., cu. ft..	3	4	5	6	7	9	13	16
Belt width, in.....	24	28	32	32	32	36	36	42

Table 46. Relation between width of stacker belt and size of gravel

Largest gravel, in...	7	9	12	15	18
Belt width, in.....	20	24	30	36	42

Stacker is a belt-conveyor on an inclined boom projecting 50 to 250 ft. upward from the rear of the boat. It handles screen oversize and may be fed with deslimed sand tailing elevated from a sump tank receiving part or all of the sluice tailing. General considerations governing conveyor design are given in Sec. 18, Art. 6. Usual practice when tonnage is the dominant factor is summarized in Table 45; when size governs, see Table 46. Speed of belts in Table 45 should be about 400 f.p.m.; those in Table 46 should

be as low as possible to prevent jar, wear, and spill. With large boulders, finger gates are provided to prevent roll-back. Slope should be as low as possible to prevent loss of capacity and high wear due to slip, and should not exceed 22°. Slip-back increases with the wetness of the gravel. Two stackers lower the tailing pile. Length of stacker on the YUBA Hammonton dredge is 275 ft.

Fine tailing is usually discharged directly from the main sluices into the pond, but where it is desirable to control the sand content of the pond they are discharged into sumps at the rear of the hull and elevated thence by bucket elevators or sand wheels onto the stacker belt.

Yardage is a highly uncertain figure in all reports of dredge operations, since there are no means of direct measurement available. Methods of estimate range from bucket counting to elaborate surveys. The bases of all survey measurements are area dug and mean depth, but since the latter figure normally requires integration of depths read on the digging ladder at unspotted points on unsurveyed swings, the "average depth" becomes little more than a guess.

Power consumption varies, of course, with the character and lie of the gravel. *Janin* gives figures for 10 NATOMAS dredges ranging from 0.62 kw-hr. per cyd., dredged from a bank 3 ft. above water and 23 ft. below, to 2.4 kw-hr. for a bank 10 ft. above water and 53 ft. below. The figures for 4 CONREY dredges (Montana) range from 1.09 kw-hr. for 45 ft. average depth to 1.55 for 28 ft. average depth. YUKON GOLD Co. dredges at Dawson consumed an average of 1.0 kw-hr. per cyd. over a 3-yr. period. At OROVILLE the consumption on one dredge ranged from 0.79 to 1.36 kw-hr. according to the character of the gravel. From 35 to 50% of the total power is used on the digging line.

Water consumption varies with the character of the material and the type of dredge. *Janin* reports a range on stacker dredges from 1,400 gal. per cyd. dug with loose unconsolidated gravel to 2,800 gal. on sticky clay at NATOMAS, with an average of about 1,900 gal. per cyd. dug for 12 dredges reporting. This figure will just about double if high-pressure water is used to clean buckets. Gal. per min. per sq. ft. of table area ranges from about 2 to 5. On flume dredges in ALASKA the circulation is about 3,600 gal. per cyd.; the CONREY flume used 4,800 gal. new water; requirements for NATOMAS dredges in 1913 were 100 miner's in. per dredge; 50 to 70 in. for a 5-ft. boat at CALAVERAS; 350 in. for an IDAHO dredge working upstream on a 4% grade. In very clayey gravel the new-water requirements increase as well as the circulating-water requirements (for bucket cleaning and disintegration) on account of the fluid-density increase in the pond. This high-density muddy water tends to suspend and carry away fine gold from the face of the bank and to carry gold in suspension over tables or jigs. Lewis (*56 CMJ 106*) reports one pond in which the slimy water carried 50¢ gold per ton. *Wimmler* states that average Alaskan new-water requirement to keep down pond density is a continuous flow of 35 to 50 miner's in.

Recovery by dredging is not really known on account of substantially insuperable difficulties in sampling. Roughly it probably ranges from 50 to 90% of the gold content of the deposit as indicated by careful drill-hole sampling. Losses occur in bedrock, gravel undug or spilled, gold in suspension in high-density pond water, gold sticking to undisintegrated clay, large nuggets in screen oversize, and fine and rusty gold that escapes the tables.

Comparison of dredges. Sluice dredges are inferior to stacker dredges for saving fine gold on account of the relatively high velocity current required in the necessarily short main sluice to carry 3- or 4-in. gravel, and the restricted area of undercurrent tables available. Other DISADVANTAGES are: the low elevation at which tailing is delivered, which difficulty becomes aggravated when working downstream on gravel which increases in depth downstream; the large pond that must be maintained, and kept open in freezing weather; and the fact that, at the start of operation, tailing may need to be discharged onto virgin ground and must, therefore, be reworked to reach that ground. ADVANTAGES, other than the certain passage of coarse gold to the sluices, are elimination of the relatively costly stacker, and a certain amount of resoiling effected by discharging fine tailing on top of coarse as the boat moves forward.

Costs are difficult to estimate and published costs even more difficult to compare accurately. There is no direct measure of yardage handled. The product of number of buckets by rated bucket capacity may exceed actual yardage by 500%; the excess for all NATOMAS dredges for 1913 was 100% as against estimates based on careful surveys of yardage in place. Bookkeeping methods vary widely, particularly as to items of depletion, depreciation, distribution of major repairs, taxes, and litigation, etc. Physical conditions of the deposit are greatly different for different dredges and may change abruptly in the progress of a given dredge. *Janin* reports a range from 200 to 80 cyd. per hr. on the same dredge on the same property due to changes in digging conditions. Low operating costs per cyd. attained by speeding up the bucket line may actually represent poor economy by reason of loss of gold at the foot of the digging ladder and further loss on overcrowded tables. Operating time is an important element; 80 to 85% is about the maximum average.

Gardner and Johnson (*IC 6788*) give an average operating cost figure (exclusive of taxes, insurance, and capital charges) of 5.1¢ per cyd. for all states for 1931 against 4.2¢ for 1914. These figures together with those in Table 47 for 1932 and the following detailed figures excerpted from *Janin* for the period prior to 1918 constitute a basis for estimate. CONREY No. 3: 5.4¢ per cyd. working downstream at 163 cyd. per hr.; 4.9¢ working upstream at 204 cyd. Aver. of four CONREY dredges: 5.9¢ operating,

Table 47. Dredges in U. S., 1932 *d* *(After Gardner and Johnson, IC 6788)*

Dredge	LaGrange	Lancha Plana *f*	Natomas 2	Natomas 4	Natomas 5
Location	LaGrange, Calif.	Camanche, Calif.	Natoma, Calif.	Natoma, Calif.	Natoma, Calif.
Character of gravel	Loose; 5% >1-ft.; prac. no clay	Med. tight; 20% clay and loam			
Depth dredged, ft. aver	30	40	30	28	50
Size bucket, cu. ft	10	6	8 1/2	15	11
Max. dig. depth, ft. *a*	30	54	35	40	60
Screens: Diam. × length, ft	6×36 1/2	6×33			
Slope, in. per ft	1 1/2	1 3/8			
R.p.m	11	9			
Diam. aperture, in	1/2, 5/8	7/16, 1			
Tables: Total area, sq. ft	2,000	2,000			
Slope, in. per ft	1 1/4	1 3/8			
Riffles: Cross section, in. *b*	1 1/4×1 1/4	1 1/4×1			
Spacing, in	1 1/4	1			
Water pumped, gal. per min	7,500	3,500			
Aver. monthly yardage	217,000	63,500	152,000	271,000	147,000
Man-hr. per cyd		0.042			
Kw-hr. per cyd	0.80	1.88			
Costs, ¢ per cyd.:					
Labor	1.6	3.4	1.6	1.0	2.0
Power	0.7	2.0	1.3	1.0	1.5
Supplies	1.0	4.2	1.7	1.3	3.2
Total	3.8	14.7	5.3	3.8	7.3

Dredge	Natomas 7	Natomas 8	Natomas 10	Placer Development	Shasta Butte
Location	Natoma, Calif.	Natoma, Calif.	Natoma, Calif.	Lewiston, Calif.	Oroville, Calif.
Character of gravel				Loose, few bldrs., little clay	Fair digging, some clay and hard grav.
Depth dredged, ft. aver	36	58	51	35	
Size bucket, cu. ft	9	15	15	7	7 1/2
Max. dig. depth, ft. *a*	60	60	60	38	41 1/2
Screens: Diam. × length, ft				6×30 1/2	6×30
Slope, in. per ft				2	
R.p.m					
Diam. aperture, in				3/8, 1/2	3/8
Tables: Total area, sq. ft		5,000			1,300
Slope, in. per ft				1 1/2	
Riffles: Cross section, in. *b*		1 1/4×1 1/4		1 1/4×1 1/4	1 1/4×1 1/4
Spacing, in		1 1/4		1 1/4	1 1/4
Water pumped, gal. per min				6,200	
Aver. monthly yardage	177,000	237,000	259,000	100,000	130,000
Man-hr. per cyd				0.036	0.024
Kw-hr. per cyd					
Costs, ¢ per cyd.:					
Labor	1.6	1.4	1.1	2.6	1.9
Power	1.4	1.4	1.3	1.4	1.0
Supplies	1.8	1.9	1.7	3.2	0.8
Total	5.3	5.2	4.5	8.0	6.2

plus 1.2¢ for upkeep. Severe winter weather was a definite handicap. PACIFIC No. 1 at Oroville: 7 1/2-cu. ft. boat, 4.4¢, 7-yr. aver. A 3 1/2-cu. ft. boat at OROVILLE: 8.2¢, 7 1/2-yr. aver. excluding amortization. BOSTON AND IDAHO: 16-cu. ft. boat, easy gravel, shallow ground, 2.8¢, 4-yr. aver. (including 0.5 to 2.4¢ for power at 0.75 to 1.5¢ per kw-hr.), plus 1¢ amortization. SEWARD: 3 1/2-cu. ft. boat, 5.9¢ for dredge labor, 26.3¢ total, including amortization. YUBA: 1915, range for 12 dredges was 3.3 to 6.9¢, aver. 4.4¢. NATOMAS: 13 dredges, range 2.5 to 7.1¢. MARYSVILLE, 5.3 to 6.9¢ total operating cost at 4,000 to 5,000 cyd. per day. All CALIFORNIA: range from 2.3¢ for a 13 1/2-ft. boat in fine easy-digging gravel to 9.6¢ for a 5-ft. boat with difficult digging. ALASKA (*Wimmler*) 15 to 35¢ (operating only) in unfrozen ground. PANAMA CANAL figures quoted by *Janin* were: 10.9¢ per cyd. for suction dredges; 36.6¢ for a seagoing ladder dredge; 43¢ for a dipper dredge on hard and soft rock with a 10-mi. haul; 26.7¢ for all dredges, 10-yr. aver.

Cost of dredges. *Wimmler* gives the following figures on Alaskan costs: $15,000 for a 1 1/4-cu. ft. simple flume dredge to $235,000 for a 7 1/2-cu. ft. stacker dredge f.o.b. Pacific Coast ports; add freight, comprising ocean freight plus $1 to $25 per ton mile in

Table 47. Dredges in U. S., 1932 *d* *(After Gardner and Johnson, IC 6788)—Continued*

Dredge	Snelling	Trinity	Yuba 14	Yuba 17	Feather River No. 1
Location	Snelling, Calif.	Lewiston, Calif.	Hammonton, Calif.	Calif.	Calif.
Character of gravel	Easy washing, few bldrs. > 1 ft.				Loose, little clay, soft bedrock
Depth dredged, ft. aver.	15	25	54		10 to 50
Size bucket, cu. ft.	6 1/2	11	14	18	7 1/2
Max. dig. depth, ft. *a*			79		50
Screens: Diam. × length, ft.	6×23	5×15	9×35	9×50 1/2	6×18
Slope, in. per ft.					
R.p.m.					
Diam. aperture, in.	3/8, 1/2	6 to 10	3/8	3/8, 1/2	3/8, 1/2
Tables: Total area, sq. ft.		360 *c*	9,000	9,000	2,260
Slope, in. per ft.		3/4			
Riffles: Cross section, in. *b*	1×1 1/4	3×2		Std. Hungarian	Hungarian
Spacing, in.	1	2			1 1/4
Water pumped, gal. per min.		7,500			
Aver. monthly yardage		100,000	300,000		*e*
Man-hr. per cyd.		0.031			
Kw-hr. per cyd.		1.5			
Costs, ¢ per cyd.:					
Labor					
Power					
Supplies					
Total		6.0	4.1		3.8

Dredge	Continental	American	Crooked River	Idaho Gold
Location	Breckenridge, Colo.	Murphy, Idaho	Idaho City, Idaho	Warren, Idaho
Character of gravel	Some bldrs., some clay	No bldrs. or clay	Some >1 ft.	
Depth dredged, ft. aver.		15	20	20
Size bucket, cu. ft.	7	2 1/2	3	3 1/2
Max. dig. depth, ft. *a*	65	18	35	32
Screens: Diam. × length, ft.	6×40	4 2/3×30	4 1/2×25	5×18
Slope, in. per ft.				
R.p.m.	15		13	11
Diam. aperture, in.	3/8, 1/2	3/8	3/8	3/8
Tables: Total area, sq. ft.	1,300	1,000	870	510
Slope, in. per ft.	1 1/2	1		1 1/2
Riffles: Cross section, in. *b*	1 1/4×1 1/4	1 1/4×1 1/4		
Spacing, in.	1 1/8			
Water pumped, gal. per min.	4,700		4,000	
Aver. monthly yardage	122,000	50,000	60,000	75,000
Man-hr. per cyd.	0.027	0.039	0.040	0.038
Kw-hr. per cyd.	1.1	0.7		
Costs, ¢ per cyd.:				
Labor	2.0	4.0		4.5
Power	1.9	1.0		1.5
Supplies	1.8			4.0
Total	6.7	7.0		10.0

a Below water.
b Depth × width.
c 90 ft. of 4-ft. sluice, angle-iron riffles.
d All stacker type except TRINITY, which is sluice.
e 30,400,000 in 20 yr. involving total move of 11 mi. Daily average running time, 87%.
f See Fig. 47 for flowsheet.

Alaska; add erection ($7,000 to $9,000 for a 2 1/2-cu. ft. flume-type, $25,000 for a 4-cu. ft. stacker-type); add 50 to 100% for 1941.

Investigation of dredging possibilities. *Janin* lists the factors to be investigated and considered before determination on this score.

1. Gold: quantity, character, and distribution. Recoverable gold is the important quantity. If particles are light, thin, scaly, or rusty they will be hard to amalgamate and dredge loss will be high. Rusty gold may be expected in tropical regions. Pan, rocker, or long-tom tests on representative test-pit or drill-hole samples should prevail. If bedrock is hard and rough or shattered, recovery will be low; increasingly so as the gold is concentrated near it.

2. Gravel: depth, character and quantity. Very shallow deposits are expensive on account of frequent moves and shallow ponds. Very deep gravels require heavy digging machinery, much power, and delays are relatively high, if any unusual difficulties are encountered. Twenty to 40 ft. is probably the most favorable thickness range, but depths greater than 100 ft. are being worked. Banks high above pond level require a monitor to break down ahead of the dredge to guard against slides and this cutting involves both additional labor and power as well as loss of a certain amount of gravel and fine gold that runs into the pond back of the current cut of the digging line. Cemented gravel is hard to dig and to disintegrate in the screen. Clayey gravel causes bucket-line, screen, and table troubles. The quantity of gravel bears on amortization costs and determines the economic size of dredge. Seven to 10 yr. is the average life of a wood hull. Capacities of boats are given in Table 43. Shallow deposits (less than 30 ft.) leave ponds too shallow for a large dredge. For tight ground smaller stronger buckets are better; boulders are handled more easily in large buckets. Gravels with large amounts of sticky clay may increase lost time to 50%. Generally with deep noncemented gravel, a large dredge has the lowest operating cost. *Janin* estimates 4 to 5¢ per cyd. for a 15-cu. ft. boat in average gravel 30 to 35 ft. deep, 5 to 7¢ for a 7-cu. ft. boat, and 5 1/2 to 8 1/2¢ for a 5-cu. ft. boat.

3. Bedrock: character and contour. See under 1.

4. Water level and available water. See *Water consumption*, p. 92.

5. Costs and availability of labor, power, transportation, and supplies. Digging-line and clean-up labor are highly skilled. Power requirements are relatively high and subject to sudden, large fluctuations. Machinery is heavy and special. Adequate machine shops can rarely be maintained except in connection with a dredge fleet operating in one district. Modern steel construction permits sectionalization to an extent that permits hulls of substantially any size, and makes assembly a matter of days. It also makes moving much simpler.

6. Surface contour and timber growth.

7. Operating costs as affected by the above factors.

8. Equipment costs as affected by the above factors, and amortization based on estimated life. Salvage values are low to nil in isolated fields. (Air transport is now practical, although expensive. Dredges weighing 1,200 tons have been flown in.)

9. Costs of land, royalties, insurance, etc.

10. Climatic conditions. Severe winters add materially to operating costs and may, by enforcing shutdowns, add also to overhead. Scarcity of water, and, to a degree, torrential storms have the same results.

11. Political conditions. Debris laws and resoiling restrictions may almost be depended upon to spring up and harass any successful operation, even though not initially on the statute books. Governments have rediscovered the art of enforcing sales of gold for depreciated currencies. Guards against pilferage may be expected, at any time, to transgress national labor legislation, or, at least, local labor rules. Taxes on gold in place, on the basis of sampling estimates, or on the whim of the local assessor, are not unknown. These hazards are not all, of course, limited to placering.

Lancha Plana Gold Dredging Co. Fig. 47 (*IC 6659*).

Location: 12 mi. west of San Andreas, Calif.

Ore: About 40% gravel and boulders, 40% sand, 20% clay, and about 1 ft. of soft altered porphyry bedrock. Easy digging. Gold comparatively coarse, occurs in both gravel and bedrock; about 1% of total recovery is Pt-group metals.

[General data continued on p. 96.]

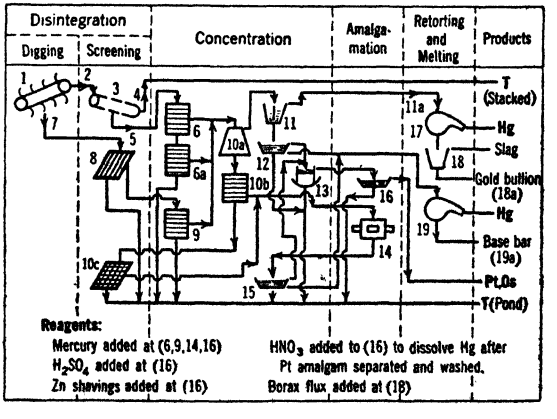

Legend for Fig. 47:

1. Bucket line, 6-cu. ft. buckets. High-pressure spray washes out buckets just beyond dump point.

2. Main hopper, 15-cyd. capacity.

3. Revolving screen, 6×33-ft., 1 3/8 in. per ft. slope, 3/4-in. manganese-steel plate, apertures range from 7/16-in. at head to 1-in. at lower end; roller-mounted, 9 r.p.m., drive on lower-end rollers, 30-hp. motor; 18 nozzles on the wash-water pipe; 2 retarding rings.

4. Stacker. 30-in.×92-ft. belt conveyor discharging about 28 ft. above pond level. 7-ply belt with 3/32-in. bottom cover and 1/4-in. (at center) to 1/8-in. (at edge) top cover. Two swinging stops above belt at 30-ft. centers to prevent roll-back of boulders. 22-hp. variable speed motor at outer end of boom.

5. Distributor, steel, 9 openings each side with sliding gates.

6. 9 sluices, 30 in. wide×8 in. deep each side. Slope, 1 3/8 in. per ft. Hungarian riffles 1 1/4(wide) ×1-in., wood covered with 1/8-in. iron, spaced 1 in., 2,000 sq. ft. riffled area in (6) and (9). Quicksilver added at head once daily. Clean-up

FIG. 47. LANCHA PLANA GOLD DREDGING CO.

Legend for Fig. 47—Continued:

at approximately 10-day intervals by standard method (see Sec. 11, Art. 26). About 70% of final concentrate of these sluices is black sand. About 80% of the gold recovered is found in the first 3 ft. of the first three sluices (those taking feed directly from the head end of the screen).

6a. 2 tailing sluices, extending 30 ft. behind boat; 200 sq. ft. riffled area.

7. Spill from bucket line.

8. Grizzly, 2-in. spacing.

9. Save-all sluice, small riffled area; makes about 10% of total gold recovery.

10. Long-tom; *a* = upper unriffled box, *b* = lower box with riffles, *c* = screen at end of *b*. Hand fed. Most of the mercury and gold amalgam and some of the Pt-group metals are caught in (10*a*); the balance of the Pt and some rusty gold and small particles of Hg and amalgam are caught in (10*b*).

11. Bucket containing clean-up of (10*a*); gold amalgam sinks, base amalgam floats and is skimmed off.

11a. Squeezed free of soft mercury. Hard amalgam contains about 55% total Au + Ag.

12. Hand panning.

13. Rocker. Concentrate is about half black sand and half Pt metals by volume.

14. 2 1/2×4-ft. amalgamating barrel. Mercury added and charge ground 1 to 2 hr.

15. Hand panning.

16. H_2SO_4 and zinc shavings cause Pt to amalgamate, after which amalgam is panned away from black sand, washed, excess mercury drained away, and mercury in amalgam dissolved by nitric acid.

17. Retort.

18. Crucible.

18a. Bullion averages 890 parts Au, 20 parts Ag, 20 parts impurity.

19. Retort.

19a. Base bar comprises lead from shot and bullets, and scrap Cu and brass together with $1 to $8 ($35 gold) precious metals per troy oz.

Capacity: 80 to 200 cyd. per hr.; average handled per operating hour (1930), 123 cyd.

Water: 3,500 g.p.m. in circulation; 2,000 g.p.m new water required to maintain pond level; comes 1/2 mi. by ditch after a 45-ft. lift by pump (10-in. centri ugal) from Mokelumne River.

Power: Purchased at aver. price of 1.1¢ per kw-hr. 440-volt motors. 1.88 kw-hr. per cyd., including new water and digging.

Labor: 167 cyd. per man-shift, total.

Running time: 68.3% over year 1930.

Costs for entire dredge operation (1930), 731,637 cyd. (bank measure) excavated: Labor, $0.034 per cyd.; power, 0.020; supplies, 0.042; supervision, office expense, road building, taxes and insurance, depreciation and amortization, 0.051; total, $0.147.

KAMERI GOLD DREDGING CO. dredge on the west coast of New Zealand (*31 CEMR 323*) has 18-cu. ft. buckets, digs from 85 ft. below pond level up to a 35-ft. bank, and stacks up to 65 ft. above pond level with a 220-ft. boom. The gold-saving plant comprises in order: hopper; 8×54-ft. screen with manganese-steel retarder rings and high-carbon steel lifter plates, driven by 100-hp. motor; transverse tables; 6 @ 42×42-in. Bendelari jigs each side; tailing sluice each side. Primary-jig concentrate is elevated to 2 @ 42×42-in. secondary Bendelari jigs in series which make final tailing, clean concentrate from the first hutch, and circulating middling from the remaining hutches. Jig concentrate is barrel-amalgamated. Spill passes over a grizzly, undersize of which is pumped to the screen.

Doodlebugs are gold-gravel concentrating plants of the general dredge type, divorced from the digging mechanism. They may be mounted on a floating hull, or on skids or crawler treads. They are used for small and comparatively shallow deposits (6 to 20 ft. is the best depth range) not large enough for a standard dredge. They are served by an excavator with a considerable range of transport capacity from a given position and with independent mobility, such as a dragline or bucket mounted on caterpillar treads. They have been built up to 7,000 cyd. per day capacity.

Holmes (*21 #11 MJA 13*) recommends a screen of 4 × (at least) 16 ft. with 3/8- to 7/16-in. round-hole plate set at 1 3/4- to 2 1/2-in. slope, for 2,000 to 2,500 cyd. per day of average gravel. An 8-in. centrifugal pump with 60- to 75-ft. lift, with a 3-in. pump for miscellaneous water, will give enough water for this daily capacity; for 3,000 to 4,000 cyd. per day a 10-in. pump is necessary. The water required for disintegration and efficient washing on the screen is normally sufficient for table operation. The hopper should be of generous size, 10 to 12 ft. square, to permit quick spotting; it should be strong and strongly supported to withstand the impact of the dropped load; and the bottom should slope sufficiently to give clean discharge without undue work with the giant. A grizzly over the hopper is usual in bouldery ground; it must be designed to hold back the oversize until it is thoroughly washed. The hopper should be placed high enough to give sufficient headroom for efficient slopes of the screen and tables plus enough drop for efficient distribution. Holmes describes a method, patented by himself, for distribution, which puts all screen undersize through a primary sluice, running forward, on a 1 1/2-in. slope, and subdivides at the end to secondary tables of two to three times the width of the primary on the same grade. Jigs weigh less and require less floor space than tables and hence are desirable for land rigs. Stacker should be 24-in. belt at 300 f.p.m. for a boat with 4-ft. screen; 30-in. for a 5-ft. screen. Shallow diamond ribbing on the carrying surface of the belt gives best service and wear.

First cost of a dragline doodlebug outfit is relatively low; it has the disadvantages that the digging depth is limited, and that the intermittent feeding causes surges in the screen and concentrators.

The Panob Gold Dredging Co., Loomis, Calif. (*22 #14 MJA 4*), has a dry-land plant, built of structural steel, mounted on wide-tread tracklayer-tractor running gear at one end and on wide wheels at the other. It weighs 27 tons and is hauled from place to place by a tractor. It is fed by a 1 1/4-cyd. dragline shovel. It handles 100 cyd. of gravel per hr. and requires 400 g.p.m. of water, at 50-lb. pressure. Screen is 54-in.×20-ft. (6 ft. blank), with 1/4-in. screen. Undersize goes to 4 @ 36-in. rubber-riffled Ainlay centrifugal bowls. Stacker belt is 24-in.×50-ft. Fine tailing is pumped by Hydroseal pump to ponds far enough from the excavation so as not to interfere with bedrock clean-up. The rig is much more stable than a small floating hull, which is important for jig and centrifugal-bowl operation. The apparatus is narrow enough to be moved along highways and other roads of customary width.

Lincoln Gold Dredging Co., Klamath River, near Happy Camp, Calif. (*141 #9 J 57*), operated 1 @ 4,000-cyd. and 1 @ 3,000-cyd. boat, the former with a 2-cyd. and the latter with a 1 1/4-cyd. dragline in ground of 20-ft. average depth for the season Mar. 15 to Sept. 3, 1939, handling 485,910 cyd. of gravel. Costs were $0.057 per cyd. for the larger boat (which was charged with some inefficient stripping) and $0.022 for the smaller boat, both costs including moving and washing gravel, but with no charges for royalties or exploration.

At another plant treating 2,050 cyd. per day, with a dragline, cost was 15¢ per cyd.; total equipment cost was $74,500 (*142 #2 J 75*).

In general the doddlebugs have had a bad economic record over the past 10 yr., largely due, however, to the fact that inexperienced operators have started in on inadequately tested ground, or have built plants too light to stand the punishment of high-tonnage gravel handling. In the hands of experienced operators the doddlebug solves the difficult problem of small-scale relatively cheap treatment of small and shallow deposits. The hull plants have, in general, proved more satisfactory than the land plants, but are not of course, so universally applicable.

Logan (*22 #10 MCJ 56*) reports operating costs for separate-mining boat-type operations ranging from 4 1/4 to 25¢ per cyd.; the low cost was for extremely loose gravel in ground 8 to 12 ft. deep where 225 cyd. (in place) per hr. could be dug, and operating time averaged 18 hr. out of 24; the high figure was with inexperienced operators working a crooked pay streak hard to follow; in average ground the cost should range from 8 to 10¢.

Small portable placer gold-saving units are built by various manufacturers of milling machinery. One form comprising essentially a mechanical rocker, an amalgam trap, and a flotation machine in series consists of a feed hopper with inclined grizzly bottom, mounted on a fixed frame, which wastes oversize and feeds undersize to an inclined screen (about 1/8-in. aperture) mounted in such a way on the frame of a sluice vibrated by an unbalanced pulley that oversize is wasted at the head end of the sluice and undersize feeds the sluice. An amalgam trap receives sluice tailing, which then passes by gravity to a flotation cell of subaeration type so built as to accommodate coarse feed. The sluice has angle iron-type Hungarian riffles followed by coco matting. One motor drives the shaking sluice-screen frame and the impeller of the flotation machine. The unit is 8 ft. long × 4 ft. wide × 5 1/2 ft. high overall and weighs about 2,000 lb. It may, therefore, be transported by truck or trailer, and may be disassembled (bolted joints) for mule-back transportation. Cost, without 3-hp. driving unit, is about 25¢ per lb. Capacity is stated to be about 1 cyd. per hr. A 2 cyd.-per-hr. unit with a compound trommel screen (8- to 10-m. outer jacket) replacing the grizzly and sluice-mounted screen, and an amalgamation plate in the upcoming side of the screen hopper, is 10 3/4 ft. long., 6 1/4 ft. wide, and 7 1/3 ft. high overall, weighs 4,400 lb., requires a 5- to 6- hp. driving unit, can be knocked down, and is sold at the same per-pound price. It is questionable, however, whether the small operator will make any greater savings with such an outfit than he can with a simple sluice line and shoveling-in operation. Other more elaborate plants (*133 J 23*) for hourly yardages of 20 to 100 are provided with a belt conveyor feeding gravel as excavated or grizzly undersize to a compound revolving screen, a roughing jig sending hutch to a shaking table, a scavenger sluice treating jig tailing, a stacker boom for coarse tailing, and, if necessary, a pump for sand tailing, all mounted on caterpillar treads with leveling jacks.

22. CONCENTRATION OF LODE-GOLD ORES

Methods have been classified and discussed generally in Art. 19. Typical examples follow.

Gravity concentration + amalgamation

White Swan Gold Mines, Inc. Fig. 48 (*IC 7015, p. 26*).

Location: 15 mi. from Baker, Oreg.
Ore: Semi-oxidised pyritic quartz in a shear zone in argillite.
Capacity: 40 tons per 24 hr.
Assays: Feed, $40 ($35 gold) per ton; tailing, $2. Tailing assay remains substantially constant with considerable rise in feed assay.
Recovery: 80% upward, according to feed assay.

Legend for Fig. 48:

1. 40-ton conical steel bin.
2. 1 @ 9×15-in. jaw crusher, 3/4-in. open setting.
3. 1 @ 16-in. belt conveyor; 1 @ 50-ton cylindrical steel bin.
4. 1 @ 5×4-ft. Marcy ball mill.
5. 1 @ 2×12-ft. blanket table (6 sections, each 2-ft. square); a 2×8-ft. table is in reserve.
6. 1 simplex rake classifier.
7. 80% <100-m.
8. 1 @ No. 12 Wilfley table.
9. Amalgam barrel. Ground 18 hr. with lye, 6 hr. with mercury.
10. Amalgam separator comprising an 8-in. funnel and 1-qt. fruit jar arranged by means of a 2-hole cork to supply rising water through the funnel and collect settled amalgam in the jar.
11. Amalgam trap.
12. To retort, see Sec. 14, Art. 9.

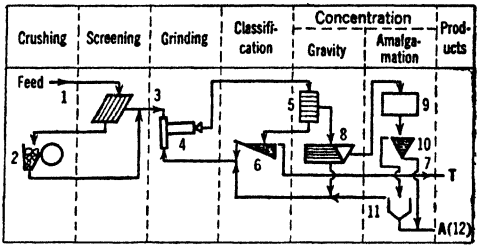

FIG. 48. WHITE SWAN GOLD MINES.

Summary. One-stage crushing and one-stage grinding to about 48-m. Gravity concentration in the grinding circuit, comprising roughing on a blanket table and cleaning on a shaking table. Gravity tailing deslimed at 48-m., slime discarded and sands returned to grinding mill. Gravity concentrate amalgamated.

Talache Mines, Inc. Fig. 49 (*IC 6985*).

Location: Quartzburg, Idaho.

Ore: Metallic gold in quartz veinlets in a crushed rhyolite porphyry; small amounts of pyrite, galena, sphalerite, galenobismuthinite, tetradymite, and tetrahedrite accompany the gold.

Capacity: 100 to 150 tons per 24 hr., 120 average.

Assays: Feed, 0.20 oz. Au per ton; tailing, 0.019 oz.

Recovery: 90%.

Water comes by gravity from a reservoir fed by a mountain stream. CONSUMPTION, 8.3 tons per ton of ore.

Running time: 90%.

Labor, 20 tons per man-shift.

Legend for Fig. 49:

1. 10-in. stope grizzlies; 100-ton bin with apron feeder.
2. Grizzly, 1-in. spacing.
3. 1 @ 20×10-in. jaw crusher, 1 1/2-in. open setting.
4. Bucket elevator, 12×7 1/4-in. buckets, 41-ft. lift, 370 f.p.m.; 145-ton bin; belt-conveyor feeder, 5 f.p.m.
5. 1 @ 8-ft.×22-in. conical ball mill, 18 r.p.m., 65% solids, 4- and 5-in. forged-steel balls (2.25 lb. per ton) and common chilled gray cast-iron liners (local; 0.63 lb. per ton), 150-hp. motor with silent-chain and spur-gear drive.
6. Hydraulic gold trap (see Fig. 50). For somewhat more elaborate form see *60 CMJ 537.*
7. Bucket elevator, 34-ft. lift, 350 f.p.m.
8. Hum-mer V-32 screen, 35-m. Ton-Cap.
9. 3 traps as (6).
10. 4 traps as (6).
11. 4 Wilfley tables.
12. Large trap as (6).
13. Belt-drag classifier.
14. 1 @ 4×3-ft. ball mill, 2-in. forged-steel balls (1.3 lb. per ton), cast-iron liners (0.40 lb. per ton), 30 r.p.m., 70% solids, 25-hp. motor with friction clutch.
15. Wilfley sand pump.
16. 2 @ 4 1/2×8-ft. amalgamation plates, 2 1/16 in. per ft. slope.
17. 2 traps as (6).
18. 2 Wilfley slime tables.
19. 1 @ 24-in. and 1 @ 22-in. amalgamation muller in parallel.
20. Retorted and melted to bullion; slag returned to (13).

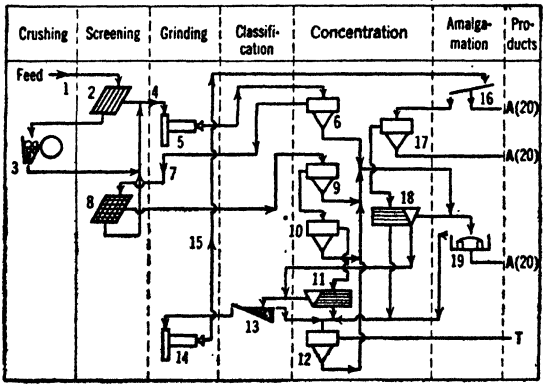

FIG. 49. TALACHE MINES.

Cost, per ton (1936): Crushing, $0.13; grinding, 0.345; amalgamation, 0.062; gravity concentration, 0.048; superintendence, 0.055; total, $0.640.

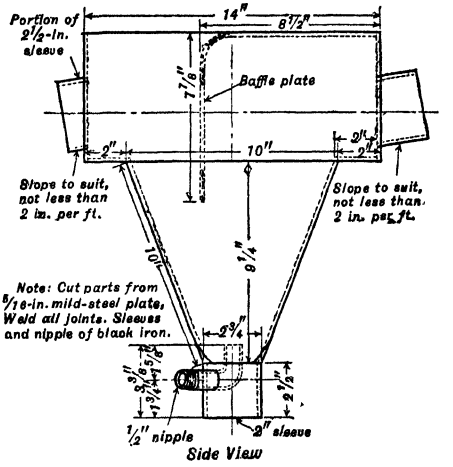

FIG. 50. Hydraulic gold trap, TALACHE MINES.

Summary. One-stage crushing and one-stage primary grinding in closed circuit with a 35-m. screen. Primary concentration by traps and shaking tables; rougher concentrate reground and cleaned by table. Concentrate amalgamated.

Amalgamation ± gravity concentration + cyanidation

The underlying idea of this method of treatment is to use a relatively cheap quick method of separating coarse gold in order to remove the burden of dissolving such gold from the cyanide process. To be amenable a part of the gold must be clean and bright and substantially free from other minerals at relatively coarse sizes.

At certain MOTHER LODE mines, ores containing coarse gold together with carbonaceous slime are treated by gravity concentration in the grinding circuit, the concentrate being amalgamated; the ground product is separated into sand and slime and the sand cyanided by percolation; slime is floated with discard of tailing; and the carbonaceous sulphide concentrate is roasted and cyanided.

When gold is too coarse for a jig (*i.e.*, would not pass into the hutch), some form of riffle or trap precedes the jig, and the same principle is employed when tables are used in the grinding circuit (see IDAHO-MARYLAND, Fig. 64). At ARNTFIELD (*Bul 342 CIMM 407*) a jig is used to scavenge sand tailing after cyanidation from an 85% <200-m. grind; it reduces the grade from 0.0085 oz. Au to 0.0063 oz. and makes a concentrate assaying 0.055 oz., which is fed back to the grinding circuit.

Homestake Mining Co. Fig. 51 (*Q* by A. J. Clark, Chief Metallurgist; Nathaniel Herz, Chief Chemist; *IC 6408; 132 J 298*).

Location: Lead, S. Dak.

Ore, approximate composition: Quartz, 30%; cummingtonite, 30; chlorite, 15; biotite, 10; garnet, 3; iron oxides, 2; carbonates, 2; porphyry, 2; pyrrhotite, 4.5; pyrite, 2; arsenopyrite, 0.5; chalcopyrite, trace. Substantially free of carbonaceous and clayey material.

Capacity: 3,800 tons per 24 hr.

Assays: Feed, 0.4 oz. Au per ton; tailing 0.02 oz.

Recovery: 95%+.

Water from Spearfish and other creeks; 75% re-used; 7 tons gross per ton milled.

Power: Company operates two hydroelectric and one steam plant; CONSUMPTION, 13.8 hp-hr. per ton milled.

Labor: American. Tons per man-shift, total 75.

Running time: 96%; loss due to renewals and adjustments.

Mill building: Sloping site; steel frame, wood and corrugated-iron siding, Barrett roofing, concrete floors; heated.

Distances: ⅝ mi. mine to mill by compressed-air locomotive and 4-ton cars.

Tailing disposal: Sand sluiced into mine; slimes to creek.

Summary. Four-stage crushing to <¾-in.; 2 closed-circuit grinding stages in series to 65-m. with amalgamation in both circuits; sand and slime cyanidation.

Legend for Fig. 51:

1. Underground. Items 2 to 5 repeated on 800-, 1,400- and 2,200-ft. levels.

2. Grizzly, 12 bars 3 1/2 in. deep×6 ft. long, spaced for 6-in. openings.

3. About 70% of feed; apron feeder.

4. 1 @ 36×48-in. Traylor Bulldog jaw crusher, 3 1/2-in. open setting, 125-hp. motors, capacity 250 t.p.h.

5. Loading pocket; shaft skips.

6. Grizzly, 1 1/2×1×6-in. cast-iron wedge bars set in a cast-iron comb support on I-beams; 3-in. aperture.

7. 2 S-A apron feeders.

8. 4 @ 12-in. A-C gyratory crushers, 3-in. open setting, 25-hp. motors.

9. 1 @ 36-in. belt with magnetic head pulley.

10. Trommel, 3-in. apertures.

11. 2 @ 12-in. A-C gyratory crushers, 2 1/2-in. open setting, 35-hp. motors.

12. Shuttle conveyor; bin; air-locomotive trains of 30 @ 4-ton cars; 7,200-ton mill bins with suspended-type Challenge feeders.

13. 165 @ 1,594-lb. (when new) stamps, 100 @ 7-in. drops per min.; 1-4-3-2-5 sequence, 5/8- to 1-in. woven-wire screens, life 22 to 30 days according to steel. Capacity, 1 ton per stamp per hr.; power consumed, 16 hp. per 5-stamp battery; 20% solids; 90 stamps per man; about 4% lost time, due principally to renewals. Mortar weighs 7,500 lb.; pocket lined with cast iron, sides with boiler plate, back with manganese steel. Dies, white iron, weigh 165 lb. new and 70 lb. when discarded after 45 days. Shoes, manganese steel, weigh 250 lb. new and 45 lb. when discarded after 135 days.

14. 10 @ 7-ft. 65-deg. dewatering cones.

15. 7 @ 5×10-ft. A-C and 3 @ 6×12-ft. Marcy rod mills; mercury fed into mills.

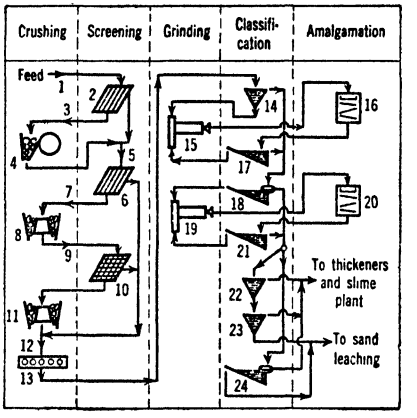

16. 10 Clark-Todd amalgamators.

17. 7 @ 4 1/2×21 1/3-ft. and 3 @ 6×28 1/3-ft. rake classifiers, 2 3/4-in. slope, 24 1/2 and 31.5 s.p.m. respectively.

18. 4 @ 12(diam.)×6×26 2/3-ft. bowl-rake classifiers, 1 1/8 r.p.m. and 13 1/2 s.p.m.; and 1 @ 16(diam.)×6×31 2/3-ft. bowl-rake classifier, 2 r.p.m. and 20 s.p.m.

19. 6 @ 5×14-ft. Marcy ball mills.

20. 6 as (16).

21. 4 @ 6×26 2/3-ft. and 2 @ 6×23 1/3-ft. rake classifiers, 2 3/4- and 2 1/2-in. slopes, and 20 and 18 s.p.m. respectively.

22. 8 @ 10-ft. 50-deg. cones.

23. 10 @ 8-ft. 50-deg. cones.

24. 2 @ 20(diam.)×6×33 1/3-ft. bowl-rake classifiers, 0.6 r.p.m. and 8 s.p.m. (Reeves drive.)

FIG. 51. HOMESTAKE MINING CO.

Dome Mines, Ltd. Fig. 52 (*Q* by J. J. Davis, Mill Sup't, V. H. Humphries, Metallurgist).

Location: South Porcupine, Ont., Canada.

Ore: 30 to 45% quartz, 30 to 40% silicates (greenstone), 3 to 4% pyrite, 0.3 to 1% pyrrhotite, 10 to 15% ankerite; no carbonaceous or clayey material.

Capacity: 1,650 tons per 24 hr.

Assays: Feed, 0.335 oz. Au per ton; tailing, 0.008 oz.

Recovery: 97.6%.

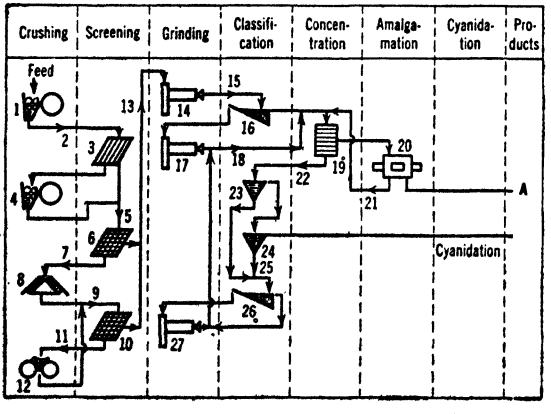

Legend for Fig. 52:

1. 1 @ 36×54-in. Buchanan jaw crusher.

2. 1 @ 560-ton bin; 1 @ 20-ton car; 1 @ 80-ton surge bin.

3. 1 rotary-disk grizzly feeder; 16 @ 24(diam.)×1/2-in. plates spaced 3 1/2-in. centers.

4. 1 @ 24×36-in. Farrell B jaw crusher, 4-in. open setting (1 @ No. 7 1/2 gyratory as standby).

5. 1 @ 24-in. belt conveyor with 1 @ 30-in. suspended magnet.

6. 1 @ 8×4-ft. 2-vibrator Hum-mer screen, 1×3/4-in. aperture.

7. 1 @ 24-in. belt conveyor.

8. 1 @ 5 1/2-ft. short-head cone, set 1/4-in.

FIG. 52. DOME MINES.

Legend for Fig. 52—Continued:

9. 1 @ 24-in. belt conveyor; 1 @ 24-in. Link-Belt bucket elevator; 1 @ 27-ton bin.
10. 3 @ 6×4-ft. Hum-mer screens, 3/4×3/8-in. aperture.
11. 2 @ 18-in. belt conveyors in series.
12. 1 @ 42×18-in. Buchanan rolls, 1/4-in. set.
13. 1 @ 24-in. belt conveyor; 1 @ 24-in. inclined belt conveyor and tripper; 1 @ 1,800-ton ore bin; 3 @ 36-in. belt-conveyor feeders.
14. 3 @ 8-ft.×30-in. Hardinge ball mills.
15. Distributing box.
16. 5 @ 6×18 1/3-ft. duplex rake classifiers, with chip screens.
17. 5 @ 5×22-ft. tube mills, No. 4 pebbles.
18. 1 @ 8-in Robeson pump (1 spare).
19. 28 @ 4 1/2×6-ft. corduroy tables.
20. 3 @ 3×5-ft. amalgam barrels.
21. Tailing; 4-in. Morris centrifugal pump.
22. 1 @ 8-in. Robeson pump (1 spare).
23. 2 distributing cones.
24. 16 classifying cones.
25. 1 @ 4-in. Robeson pump (1 spare); 1 distributing box.
26. 4 rake classifiers.
27. 2 @ 53-in.×22-ft. tube mills with slugs.

Water: Pumped 3 mi. from Porcupine Lake; 120 hp. required. Net CONSUMPTION, 1 ton per ton of ore milled.
Power: Purchased; comes 2 mi. at 12,000 volts; motors, 550-volt, 25-cycle; CONSUMPTION, 35.3 hp-hr. per ton.
Labor: Canadian. Tons per man-shift: operating, 38.4; repairs, 118.
Running time: 98.3%. Losses due to ball mills and power off.
Mill building: Sloping site. Frame, concrete and wood floors. Office and amalgamation room only heated. Machinery handling by chain blocks throughout.
Distances: 950 ft. mine to mill by 25-ton car on tail-rope haul. Standard-gage railroad on property.
Tailing disposal: 10-in. wood-stave pipe 4,000 ft. by gravity to tailing dam.

Summary. Four-stage crushing to <3/8-in., the last stage in closed circuit with a screen. Three-stage grinding, the first stage open-circuit. Blanket tables supplemented by amalgamation remove coarse gold from the second-stage grinding circuit. Blanket-table tailing is cyanided.

Yellow Aster mill (Anglo American Mining Corp.). Fig. 53 (*140 ✱ 10 J 32, IC 7096*).

Location: Randsburg, Kern County, Calif.
Ore: Gold in quartz and monzonite; oxidized and free-milling.
Capacity: 3,000 tons per 24 hr.
Assays: Feed: $0.85 to $1.00.
Power: Purchased at 33,000 volts; motors, 150-hp. and larger @ 2,400-volt, smaller @ 480-volt.

Legend for Fig. 53:

1. 10-ton trucks; 170-ton wooden bin.
2. 1 @ 4×10-ft. Sheridan grizzly feeder, 5×7-in. openings, 7/8 in. per ft. slope, 25-hp. variable-speed motor.
3. 1 @ 48×60-in. A-C jaw crusher, 5 1/2-in. open setting, 145 r.p.m., 250-hp. motor.
4. 1 @ 30-in. belt conveyor with Dings magnetic pulley.
5. 1 @ 4×10-ft., type 600 Niagara, 2-deck screen, 3×3-in. and 1×1-in. apertures; cable and spring suspended, 19° slope, 1,160 s.p.m., 7 1/2-hp. motor.
6. 1 @ 4-ft. Traylor TY reduction gyratory, set 1 1/4-in., 150-hp. motor; fed through 3 chutes to equalize wear.
7. 1 @ 24-in. belt conveyor.
8. 2 @ 4×10-ft. 2-deck Niagara-type 300 screens, 1/4×1/2-in. apertures, slope 21°, 1,200 s.p.m., 5-hp. motor.
9. 1 @ 18-in. belt conveyor; automatic tripper; 1,800-ton ore bin; 16-in. belt conveyor; 40-ton surge bin; 16-in. inclined belt conveyor with constant-weight feeder. Assay: $2 to $2.50 per ton.
10. 1 @ 42×42-in. Pan-American jig.
11. 1 @ 8×26 2/3-ft. Wemco duplex rake classifier, 3 1/4 in. per ft., 27 s.p.m., 10-hp. motor; overflow, 13% solids, 2% >48-m.
12. 1 @ 8-ft.×36-in. Hardinge ball mill, <3-m. discharge.

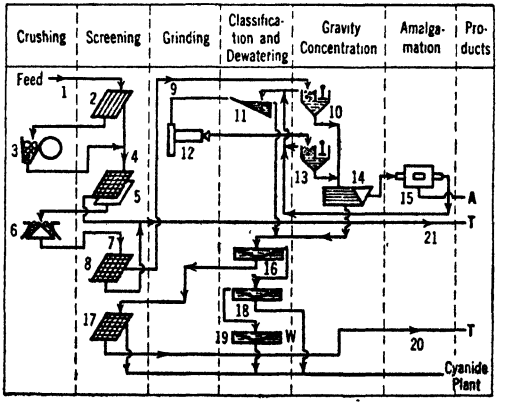

13. As (10).
14. Willfey table. 40 to 50 tons feed per day, assays $15 to $20 per ton ($35 gold); concentrate, $700 to $800; tailing, $5.
15. Continuous amalgamating barrel.
16. 30-ft. thickener.
17. Link-Belt vibrating screen, 6-m. cloth.
18. 2 @ 18-ft. thickeners.
19. 2 @ 40-ft. thickeners.
20. 1,000 t.p.d.
21. About 20% of total feed.

FIG. 53. YELLOW ASTER mill.

Water: From wells; pumped 7 1/2 mi. against a total head of 2,710 ft.; total input power, 289 hp.
Costs (1938): Crushing, screening, and waste disposal, $0.155 per ton milled; milling including cyanidation $0.140; total $0.295.

Summary. Two-stage crushing from 2 1/2-cyd. shovel material to 1/4-in. in jaw crusher and reduction gyratory; one-stage closed-circuit grinding to 4-m. Two-stage rough concentration at <1/4-in. and <3-m. in jigs, with cleaning of jig hutch on tables and continuous barrel amalgamation of table concentrate. Slime tailing to cyanidation.

Straight Cyanidation

This method is the one used in the majority of large-tonnage gold-ore mills, if not, perhaps that applied to the bulk of gold-ore tonnage. It is the method of the Rand mills, of many of the larger Canadian mills, and of a considerable number of the mills in the United States. The typical flowsheet is 2- or 3-stage crushing, 2- or 3-stage grinding to upward of 80% <200-m., and either sand-slime or all-slime cyanidation. In general all-cyanide plants are medium- to high-tonnage mills for the reason that they are the most expensive both to build and to operate, that their economy is not clearly demonstrable for low-grade ores on a low tonnage basis, while with high-grade ores at a small mine the usual tendency is to gut the mine, and the question of maximum economy is not, ordinarily, closely investigated.

Concentration by gravity, flotation, or amalgamation in the grinding circuit is increasingly the practice in cyanide plants, even when the gold is not so coarse as to require it. It has the advantage of early recovery of values, but the disadvantage that it increases opportunity for theft.

Cyanidation + flotation

This method of treatment is applied to ores which contain appreciable percentages of the total gold dispersed relatively finely in nonsulphide rock, and a further finer portion in sulphides, which may or may not be harmful in cyanidation; in the former case, concentrate made from cyanide tailing is shipped to a smelter; in the latter case concentrate is reground and cyanided, either separately or joined back into the main stream.

Kelowna Exploration Co. Fig. 54 (*Q* by Geo. L. Mill, Mill Sup't).

Location: Hedley, B. C., Canada.
Ore: Arsenopyrite, 5 to 12%; pyrrhotite 4 to 12; chalcopyrite, 0.40; minor amounts of pyrite, sphalerite, cobalt and nickel sulphides in argillite. There are no carbonaceous or clayey materials in the ore that interfere with cyanidation.
Capacity: 250 tons per 24 hr.

Legend for Fig. 54:

1. 250-ton bin.
2. 1 @ 24×36-in. Traylor jaw crusher, 4 1/2-in. open setting, 75-hp. motor.
3. 1 @ 24-in. belt conveyor with suspended magnet and magnetic head pulley (5-hp. motor-generator set).
4. 1 @ 4×8-ft. 2-deck Ty-rock screen, 2-in. and 3/4-in. apertures, 5-hp. motor.
5. 1 @ 4-ft. standard cone, 7/8-in. set, 100-hp. motor.
6. 18-in. belt conveyor; 18-in. shuttle conveyor; 1 @ 2,200-ton bin.
7. 8 batteries (=40) @ 1,050-lb. stamps, 150-hp. motor.
8. 3 @ 4 1/2×21-ft. duplex rake classifiers.
9. 3 @ 5×22-ft. A-C pebble mills.
10. >2-in. rock for pebbles.
11. 1 @ 10(diam.)×8×30-ft. bowl-rake classifier.
12. 1 @ 5×22-ft. A-C pebble mill.
13. 1 @ 36-in. Bendelari jig, 3-hp. motor.
14. Cyanidation.
15. 1 @ 18×12-ft. conditioner, 10-hp. motor, 5.5 hp. consumed; 180 min., 40% solids, *p*H 10; temperature, 42° winter to 58° summer.
16. 1 @ 6×6-ft. conditioner, 5-hp. motor, 2.9 hp. consumed; 26% solids, 3.5 min. time-factor, *p*H 10.
17. 1 @ 66-in. sq. Fagergren cell, 15-hp. motor, 8.7 hp. consumed; 490 r.p.m., 26% solids.
18. 2 @ 6-cell 36-in. (sq.) Fagergren machines in parallel, 3-hp. individual motors, 2.1 hp. consumed; 865 r.p.m.; time-factor, 11 min.

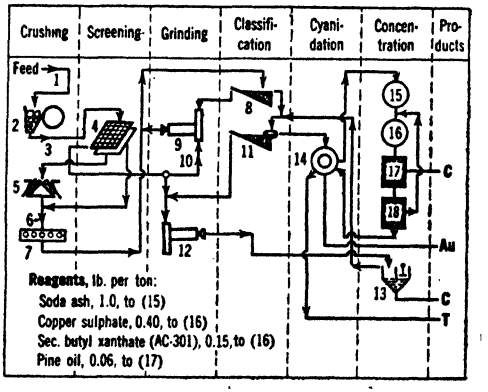

FIG. 54. KELOWNA EXPLORATION CO.

Assays: Feed: Au, 0.38 oz. per ton; As, 4.5%; Cu, 0.20%; tailing, 0.025 oz. Au, 0.70% As, 0.03% Cu.; concentrate: Au, 1.00 to 1.15 oz. per ton; As, 26 to 32%; Zn, 1 to 1.5%; Cu, 1.5 to 2.5%; insol., 8%.
Recovery: 70% by cyanidation; 24% by flotation.
Ratio of concentration: 15 : 1.
Water comes 3 mi. by gravity through wood-stave pipe from mountain stream; CONSUMPTION, 7.5 tons per ton milled, none re-used.
Power purchased; comes 200 mi. at 66,000 volts; motors, 2,300- and 440-volt, 60-cycle.
Labor: Canadian. Tons per man-shift: operating, 20; repairs, 65.
Running time: 99.2%.
Mill building: Sloping site. Wood frame, covered with corrugated iron. Floors wood in grinding plant, concrete in cyanide and flotation sections; level, benched. Heated with unit heaters. Trolleys and chain blocks for handling machinery.
Distances: 3 mi. mine to mill; 1 1/2 mi. by locomotive, 1 1/2 mi. by gravity surface tram. Nearest railroad, 1/4 mi. Concentrate shipped 400 mi. with 9.5% moisture.
Tailing impounded; clear water overflows a central weir.

Summary. Three-stage crushing and 2-stage closed-circuit grinding in water, jig in second stage, to 98.5% <200-m.; cyanidation, flotation of cyanide tailing, and retreatment of flotation tailing by cyanide.

Wright-Hargreaves Mines, Ltd. Fig. 55 (M. Black, Mill Sup't, *140 #3 J 29; 140 #4 J 37; 140 #5 J 42*).

Location: Kirkland Lake, Ont., Canada.
Ore: Tellurides and small amounts of sulphide in hard andesite porphyry. Complete analysis: Au, 0.66 oz. per ton; Ag, 0.10 oz.; Fe, 2.6%; Pb, 0.014%; Cu, 0.008%; Te, trace; S, 0.7%; MoS_2, trace; SiO_2, 66.2%; Al_2O_3, 13.3%; CaO, 3.6%; MgO, 1.7%; Na_2O, K_2O, 7.1%; CO_2, 3.1%.
Capacity: 1,200 t.p.d.
Assays: Feed, $21.75 per ton; tailing, $0.72 per ton.
Extraction: 96.5%.
Power: Purchased; comes in at 2,200 volts; 550-volt motors; CONSUMPTION, 52.8 hp-hr. per ton milled.
Mill building: Steel and concrete. Walls of 1 3/4×12-in. Douglas-fir shiplap, 1/2-in. Celotex, and rigid asbestos shingles; roof of 2 3/4×12-in. shiplap, 1/2-in. Celotex, 1 3/4×12-in. shiplap, 1/2-in. Celotex, and Twenty-year built-up roofing. Both layers of Celotex were laid in asphalt. This elaborate construction is to insure against inside sweating. Heating is by steam unit heaters.
Tailing disposal: Tailing is pumped into a 30-in.×89-ft. steel standpipe, thence by 12-in. wood-stave pipe 2 mi. to a disposal site. Standpipe is fed at 46 ft. above the ground (slightly above normal pulp level) from a 5×5-in. rubber-lined centrifugal pump with 35-hp. motor. Velocity in pipe line is 1.6 f.p.s.
Distances: Mill at mine shaft.
Costs: (1937) Crushing, $0.105; primary grinding, 0.231; secondary grinding, 0.221; filtering, 0.104; thickening, 0.066; agitation, 0.038; precipitation, 0.033; sampling and assaying, 0.043; refining, 0.016; lighting, 0.011; heating, 0.011; flotation, 0.104; tailing disposal, 0.035; reagents, 0.104; superintendence, 0.025; miscellaneous, 0.015; total, $1.16.

Legend for Fig. 55:

1. Through 10-in. grizzly underground; 600-ton steel bin; 1 @ 42-in. ratchet-actuated conveyor with suspended magnet.

2. 1 @ 20×40-in. jaw crusher, set for 3 1/2-in. ring size.

3. 1 @ 24-in. belt, 250 f.p.m.; 1 @ 36-in. belt, 100 f.p.m. for picking waste.

4. 1 @ 4×4-ft. 2-deck Symons rocker screen, 1×2-in. and 1/2×1-in. apertures.

5. 1 @ 5 1/2-ft. standard cone, 150-hp. motor.

6. 1 @ 19-in. belt, 360 f.p.m.; 1 @ 20-in. belt, 360 f.p.m.; 1 @ 30-ton steel surge bin with roller feeders.

7. 2 @ 4×8-ft. Humm-er screens, type 400, 0.27×3.12-in. apertures, 34° slope.

8. 1 @ 18-in. belt conveyor, 283 f.p.m.

9. 2 @ 4-ft. short-head cones.

10. 1 @ 18-in. belt conveyor, 250 f.p.m., 18° slope, 15-hp. motor; with automatic weigher (Transportometer); 2 @ 32(diam.)×30-ft. steel bins, 1,000 tons capacity each, 10 @ 14×16-in. discharge chutes each bin; 3 @ 18-in. discharge conveyors; 1 collecting conveyor; 1 @ 6-ton surge bin with photoelectric charge control; 3 separately controlled conveyors.

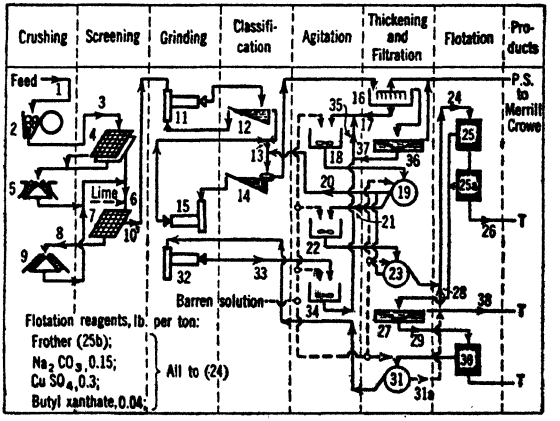

FIG. 55. WRIGHT-HARGREAVES MINES.

Legend for Fig. 55—Continued:

11. 1 @ 9×7-ft. A-C grate-type ball mill and 2 @ 8-ft.×30-in. Hardinge ball mills; 200% circulating loads.

12. 1 @ 12×30-ft. rake classifier; 2 @ 6×21-ft. rake classifiers.

13. 1 @ 8-in. Hydroseal pump (1 @ 8-in. Wilfley pump in reserve); 1 revolving distributor; 3,600 tons dry per 24 hr. at 50% solids; 60 hp. consumed at 55-ft. total head; 850 r.p.m. Cost 0.095¢ per dry ton pumped for maintenance supplies.

14. 3 @ 18(diam.)×6×28-ft., 2 @ 18(diam.)×16×31 2/3-ft., 1 @ 18(diam.)×16×29-ft. bowl-rake classifiers.

15. 6 @ 5×16-ft.; 1 @ 5×14-ft. tube mills.

16. 2 @ 2,300-sq. ft. Genter thickeners. Used because they took less space than gravity thickeners.

17. 2 @ 4-in. Denver quadruplex diaphragm pumps (2 @ 4-in. Wilfley pumps in reserve).

18. 2 @ 24(diam.)×26-ft. agitators in series.

19. 4 @ 14(diam.)×16-ft. Oliver filters (one a spare).

20. 3 @ 4-in. filtrate pumps (one a spare); 1 solution aerator.

21. 1 @ 5-in. A-C pump.

22. 1 @ 22(diam.)×20-ft. agitator.

23. As (19).

24. Pump; distributor.

25. 1 @ 40-ft. Hunt-Southwestern flotation machine; feed about 30% solids.

25*a*. 2 @ 7-cell 56×14-in. Fagergren flotation cells in parallel. Ratio of concentration in rougher, 30 : 1.

25*b*. 9 parts cresylic acid, 25 parts Dupont B23 and 1 part Dupont B25 added here and elsewhere as needed.

26. 1 @ 5-in. A-C pump (1 @ 4-in. Wilfley spare).

27. 1 @ 35.5×9.4-ft. thickener.

28. Alternative.

29. 1 @ 3-in. A-C pump.

30. 1 @ 8-cell No. 24 Denver flotation machine. Final ratio of concentration 100 : 1 upward.

31. 2 @ 11 1/2(diam.)×14-ft. Oliver filters (one a spare).

31*a*. 1 @ 3-in. filtrate pump.

32. 1 @ 5 ft.×22-in. Hardinge ball mill, 3~4-in. lumps of ore used as grinding media. 25 lb. dry lime per ton of solid added to mill.

33. 1 @ 2-in. A-C pump. Strong cyanide added here. 70% of gold dissolved in a few minutes but for remaining extraction up to 97% requires 2 to 3 weeks' agitation.

34. 7 @ 12×12-ft. Denver-Wallace agitators in series.

35. 2 Wilfley pumps.

36. 1 @ 34.5×9-ft. thickener.

37. 1 @ 4-in. diaphragm pump.

38. Discarded because of inability to control frothing, if re-used, and to the further fact that its use produces high tailing and low-grade concentrate.

Summary. Three-stage crushing in jaw crusher and cones from 10-in. to <1/4-in.; feeds to the cones are scalped and the crushing circuit is closed by a final screen. Two-stage grinding in ball and tube mills, each stage in closed circuit. Cyanidation by agitation and filtration, with intermediate flotation, regrind of concentrate, and concentrate leaching in a separate slime circuit with prolonged agitation prior to return of the pulp to the main circuit.

Flotation was introduced to reduce mill space required for prolonged agitation due to telluride gold. The point of introduction of the operation was that at which the cyanide extraction-time curve began to flatten, *i.e.*, where easily dissolved gold had been removed.

Flotation + cyanidation of concentrate

This method is practiced on ores in which the gold is markedly concentrated in the sulphides in which these minerals free at a size much coarser than that at which the gold is freed, and are either not refractory to cyanidation or can be rendered amenable to cyanidation by roasting, leaching, or other treatment. It has the advantage that much finer grinding of gold-bearing particles (*e.g.*, *40% <10-μ*) is thus economical than would otherwise be the case; the disadvantage is that cyanide-refractory materials may become concentrated in cyanide-plant feed to such an extent as to interfere seriously. Use of the combination process is increasing, particularly in small mills.

McIntyre Porcupine Mines, Ltd. Fig. 56 (*Q* by J. J. Denny; *134 J 472*).

Location: Schumacher, Ont., Canada.

Ore: Quartz, porphyry, and schistose basalt and dacite; pyrite content averages 7 to 8%. Gold is predominantly in the pyrite.

Capacity: 2,400 tons per 24 hr.

Assays: Feed: Au, 0.279 oz. per ton; flotation tailing, 0.013 oz.; total tailing, 0.015 oz.

Recovery: 94.6%.

Water pumped 300 yd. from lake; power consumption, 84 hp.; total water CONSUMPTION, 2 1/4 tons per ton of ore, none re-used.

Power: Hydroelectric, purchased. Comes 7 to 164 mi. at 12,000 to 110,000 volts; motors, 2,200- and 440-volt, 25-cycle. CONSUMPTION, 20.7 hp-hr. per ton milled.

Labor: Canadian. Tons per man-shift: crushing, 200; milling, 73; repairs, 200.

Running time: 98.7%. Lost time due to power interruptions and to tube-mill and classifier repairs.

Mill building: Level site. Steel frame, 8-in. hollow-tile walls, concrete floors sloping 1/8 to 1/2 in. per ft. Crushing plant heated; mill proper not. Power cranes in crushing, grinding, and flotation bays.

Distances: Mill at mine. Railroad runs through plant yard.

Tailing disposal: A settling pond was built by raising a dam with a mechanical shovel. Sand tailing s deposited on the original dam by pipe line and sand spigots; slime is diverted into pond. The sand s worked up by mechanical shovel as necessary.

Costs (1933): Crushing and conveying, $0.107; flotation, 0.363; cyanidation, 0.273; refining, 0.022; assaying, 0.015; mill alterations, 0.004; total, $0.785.

Legend for Flg. 56:

1. On 3,875-ft. level: 1 @ 64-in. Ross chain feeder from ore pass; 1 @ 36×48-in. Traylor jaw crusher, 7-in. open setting, 140 r.p.m., 150-hp. motor, 2-in. throw, 170 t.p.h.

2. Hoisting shaft; 750-ton steel bin, 2 finger gates; 4×26-ft. pan conveyor, 4 to 20 f.p.m., with 55-in. suspended magnet.

3. 1 @ 7-ft. standard cone, 7/16-in. set, 200-hp. motor, 150 t.p.h. 2 1/4-in. manganese-steel liners last 10 mo.

4. 1 @ 36-in. inclined conveyor with 45-in. suspended magnet and weightometer; automatic tripper; 190-ton steel surge bin with 45(face)×18-in. drum feeders.

5. 6 @ 4×6-ft. Hum-mer screens, 3/16×5/8-in. aperture, 33 1/2° slope. Special steel cloth lasts 70 da.

6. 1 @ 24-in. conveyor.

7. 1 @ 78×18-in. Ajo-type Traylor rolls, 1/8-in. set, choke-fed, 125 r.p.m., 150-hp. motor each roll, 40,000 lb. per lin. in. spring pressure, 8 11/16-in. chrome-steel shells wear to 2 1/2 in. in 95 da. Emery blocks used on edges. 190% circulating load.

8. 1 @ 24-in. conveyor.

9. 2 @ 24-in., 1 @ 30-in., 2 @ 24-in. inclined conveyors in series; automatic tripper; 1 @ 4,000-ton steel mill bin; 5 @ 30-in. collector conveyors, variable speed; 3 @ 24-in. tube-mill feed conveyors.

10. 5 @ 5×16-ft. ball mills, wave-type white-iron liners, 2 1/2 in. thick, life 9 mo., 20 tons 2- and 2 1/2-in. steel ball charges each mill, 650 lb. new balls to each mill daily. 29 r.p.m., 150-hp. motors.

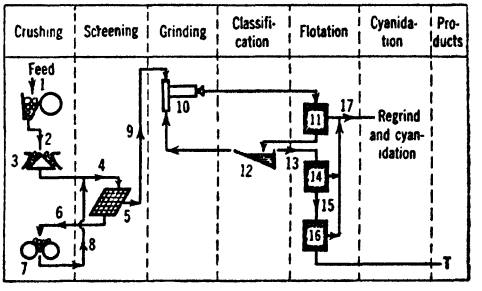

11. 5 @ No. 500 Denver unit cells equipped with hydraulic-classification cones. Cones make about 400 lb. per day of concentrate assaying 750 oz. Au per ton; froth concentrate, 1,600 lb. per 24 hr. each, assay 4 oz. Au. About 72% of total recovery made in these cells. Feed is guarded by 4-m. trunnion trommels. Feed pulp 58% solids, *p*H about 8. Impeller, 270 r.p.m., molded rubber, life 260 da.; rubber liner, 5 yr.

12. 5 @ 6×30-ft. rake classifiers (3 medium-duty, 2 heavy-duty).

13. 1 @ 6-in. Morris sand pump (one spare).

14. 8 @ 6-cell No. 24 Denver Sub-A machines in parallel; impeller, 255 r.p.m., molded rubber, life >6 yr. Pulp, 32% solids, *p*H approx. 8; temp., 50° winter, 70° summer; time-factor, 17 min.; concentrate, 2.5 oz. Au; tailing, 0.021 oz.

15. 1 as (13).

16. As (14); concentrate, 0.25 oz. Au, tailing, 0.013 oz.

17. 400 tons per 24 hr. assaying 65% pyrite and 3.2 oz. Au per ton.

FIG. 56. MCINTYRE PORCUPINE crushing, grinding, and flotation mill.

Summary. Three-stage crushing and one-stage closed-circuit grinding to 10% >65-m. flotation feed. Unit-cell and one-stage rougher flotation making a 6 : 1 ratio of concentration; concentrate reground to 80% <325-m. and cyanided.

Wiluna Gold Mines, Ltd. Fig. 57 (*Q* by Metallurgical Staff; *43 MM 58*).

Location: Wiluna, Western Australia.

Ore: Gold-bearing pyrite and arsenopyrite in quartz, calcite, siderite, and chlorite.

Capacity: 1,550 tons Wiluna ore as above; 350 tons Moonlight ore, containing additionally stibnite.

Assays: Feed, 0.225 oz. Au per ton; concentrate, 2.25 oz.; tailing (flotation + cyanide), 0.043 oz.

Recovery: Flotation, 90%; cyanidation of calcined flotation concentrate, 90% on concentrate; overall, 81%.

Ratio of concentration: 10 : 1.

Water from wells pumped 3 mi.; 45 hp.; CONSUMPTION, 1 ton per ton of ore, net; 70% re-used. Prior to 1935 salt water (12% salt) was used; change to fresh water resulted in better recovery in flotation and quicker settling in thickeners.

Power: Diesel generated; motors, 440- and 3,300-volt, 50-cycle; CONSUMPTION, 50 hp-hr. per ton milled.

Labor: English-speaking.

Running time: 97.5%. Principal loss due to mill repairs.

Mill building: Level site. Steel, concrete floors. Unheated. Machinery handled by 5-ton crane and chain blocks.

Transport: Conveyor belts 2,200 ft. mine to mill; railroad siding at property.

Tailing disposal. See flowsheet item 28.

Costs (milling only): Crushing, 6.7¢ per short ton; conveying, 2.5¢; ball milling, 14.5¢; tube milling, 20.6¢; classification, 1.7¢; thickening, 1.4¢; flotation machines, 7.4¢; flotation reagents, 17.1¢; pumping and filtering, 5.7¢; tailing disposal, 1.6¢; total, 79.2¢.

Legend for Fig. 57:

1. R.o.m. < 12-in.; 56-ton coarse-ore pocket; Ross chain feeder (6 @ 2 1/2-in. × 28 1/2-ft. chains, 13 1/2-in. links, 3 speeds, 7 1/2 f.p.m. usual speed).

2. 1 @ 20-in. gyratory crusher, 3-in. open setting. Capacity, 250 t.p.h.; normal rate, 150 t.p.h.

3. 1 @ 24-in. × 250-ft. belt conveyor; 1 @ 36-in. pan magnet suspended over head pulley.

4. Finger grizzly, S-bars 1 1/2 × 7-in. spaced 2 in., finger speed 17 r.p.m.

5. Inclined chute with 6-chain Ross feeder, 2 r.p.m.; 1 @ 48-in. belt conveyor with bipolar suspended magnet. Coarse (6~4-in. ring) lump ore picked here for tube-mill pebbles.

6. Hum-mer screen, 1/2-in. aperture.

7. 2 surge bins each with 1 @ 5-chain Ross feeder (2-in. chain, 3 speeds, 3 r.p.m. normal).

8. 2 @ 4-ft. standard cone crushers, set 3/8-in.

9. 2 @ 4 × 6-ft. Hum-mer screens, 7/16-in. aperture, manganese-steel cloth gives 55,000-ton life.

10. Small trommel with 2 1/4-in. sq. aperture to remove chips.

11. Surge bin with 24-in. belt feeder.

12. 1 @ 4-ft. short-head cone set 3/16-in.

13. 2 @ 24-in. belt conveyors in series transport 1,050 ft.; Blake-Denison weightometer; tripper to 4 @ 32 (diam.) × 25-ft. cylindrical steel ore bins; 3 gravity-type Burma feeders per bin feed to 1 @ 16-in. variable-speed belt conveyor with automatic siren alarm for feed stoppage. Each bin feeds one of four separate units, items 14 to 20.

14. 1 @ 8-ft. × 36-in. conical ball mill. 30 × 30-in. trunnion trommels, 5/16-in. aperture.

15. 2-in. Wilfley pump.

16. 2 @ 5 1/2 × 22-ft. tube mills with 3/8-in. trunnion trommels which remove coarse grinding medium; this is discharged onto a belt conveyor which discharges to a 25-ton bin whence it is trammed back to the crushing plant.

17. 1 @ 4-in. Wilfley pump.

18. 1 @ 15 1/2 (diam.) × 8-ft. bowl-rake classifier; overflow, 28% solids, 30% > 200-m.

19. 1 @ 30 (diam.) × 10-ft. conditioner, 8 r.p.m., 15-hp. motor, 40-min. time-factor; *p*H on exit about 8.6.

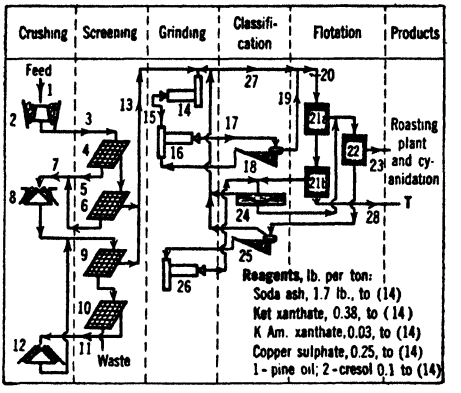

20. 1 @ 6-way distributor.

21. See note (13). 4 @ 10-cell and 1 @ 8-cell 24-in. M-S subaeration machines and 1 @ 10-cell 56-in. round-overflow Fagergren machine in parallel; *a* = first 4 cells; *b* = remainder. Subaeration machines take air at 4 lb. pressure, consume about 50 hp. for air for 56 cells; shrouded impellers have 4-in. at 45° blades, local cast iron, life 9 to 10 mo. Fagergren cells, 575 r.p.m.; local cast-iron rotors, 2 3/8-in. bars, last 5 mo., rubber-covered 9 to 10 mo., local cast-iron stator, 5 1/2 mo.

22. 2 @ 4-cell 24-in. M-S subaeration machines in parallel.

23. 1 @ 60 × 10-ft. thickener; 1 @ 20 (diam.) × 10-ft. Goldfield agitator, 10 r.p.m.; 2 @ 12 (diam.) × 11 1/2-ft. Oliver filters.

24. 1 @ 18-ft. (diam.) classifying thickener, 1.5 r.p.m.; overflow, 12% solids, split as indicated; underflow, 45% solids.

25. 1 bowl-rake classifier, as (18).

26. 1 tube mill, as (16).

27. To cell No. 3 of Fagergren machine.

28. 1 @ 6-in. Wilfley pump (1 reserve); 2 @ 100-ft. and 2 @ 120-ft. thickeners in parallel, 27% solids in feed, 53% (aver.) solids in underflow, clear overflow represents 68% recovery; 2 @ 6-in. Wilfley pumps 1,950 ft. to tailing dam.

FIG. 57. WILUNA GOLD MINES.

Legend for Fig. 58:

1. Substantially 65-m. 2.0 lb. per ton of soda ash, 0.4 lb. KEt xanthate, 0.1 lb. KAm xanthate, 0.7 lb. lead nitrate and 0.1 lb. of 1-pine oil : 2-cresol added at primary ball mill (item 14, Fig. 57).

2. Surge tank.

3. 1 @ 56-in. (rd.) 10-cell Fagergren machine; *a* = cells 1, 2; *b* = cells 3 to 10.

4. 2 vortex conditioners in series; 1 lb. per ton sodium hydroxide and 3 lb. sodium cyanide added at first conditioner.

5. 1 @ 24-in. M-S cell.

6. 1 @ 24-in. 2-cell M-S machine.

7. 1 @ 25-ft. thickener.

8. Underflow of thickener is auriferous concentrate which is dewatered (solution is precipitated) and joins Wiluna concentrate (Fig. 57).

9. 1 as (5).

10, 11, 12. 1 Forrester cell.

13. Conditioning tank.

14, 15, 16. 1 Forrester cell.

17. 1 shaking table.

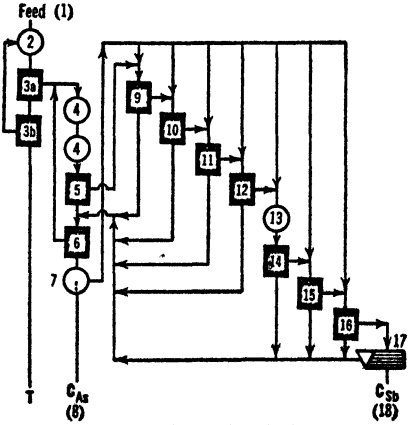

18. Stibnite concentrate dewatered, washed, and shipped; solution precipitated with that from (8).

FIG. 58. Flotation routing for Moonlight (WILUNA) stibnite ore.

Summary. Three-stage crushing; 2-stage grinding (first stage open-circuit) to 65 *mog.* Flotation by rougher-cleaner routing with regrind of cleaner tailing. Concentrate calcined and cyanided.

Ore from the Moonlight mine, containing substantially nonauriferous stibnite and auriferous arsenopyrite is crushed and ground to flotation size in a flowsheet substantially like Fig. 57, then floated as in Fig. 58.

Buena Vista Mining Co. Big Missouri mill. Fig. 59 (*Tref, 11/40; Bul 312 CIMM 329*).
Location: Joker Flats, B. C.
Ore: Native gold with pyrite, galena and sphalerite in volcanic tuff.

Legend for Fig. 59:

1. 16-in. stope grizzlies; 4-ton cars; 1,400-ton coarse-ore bin with 4-ft. compressed-air undercut arc gate. Feed chute is covered with a chain curtain, 1 1/4-in. stock, with 60-lb. rail attached for extra weight.

2. 1 @ 30×42-in. Traylor jaw crusher, 2 1/2-in. open setting, 150 r.p.m.

3. 1 @ 30-in. conveyor; 2 magnets.

4. 1 @ 5×10-ft. Ty-rock screen, 7/8-in. aperture.

5. 1 @ 3-ft. Traylor TY reduction gyratory, 3/4-in. set.

6. Bucket elevator.

7. 1 @ 24-in. conveyor with tripper; single-bucket sampler; 3 @ 350-ton bins; 3 Hardinge constant-weight feeders with revolution counters, automatic signals, and no-load cutoff controls; 3 @ 24-in. belt conveyors.

8. 3 @ 6×12-ft. Cole-Bergman ball mills; 23.9 r.p.m.; 150-hp. motors with magnetic clutches and speed reducers; discharge, 70% solids; manganese-steel liners, 0.4 lb. per ton; 3- and 4-in. balls, 2.4 lb. per ton.

9. 3 @ 16×24-in. Denver duplex jigs. 227 @ 1/4- to 5/16-in. s.p.m.; 3/16-in. steel shot for bedding, 2-mm. screen.

9a. By-pass.

10. 3 @ 8×24-ft. duplex rake classifiers; overflow, 28% solids, 65% <200-m.

11. 1 @ 10-cell 24-in. M-S subaeration machine; 50-hp. motor with V-belt drive.

12. To 1 @ 6×6-ft. ball mill in closed circuit with 3×25-ft. rake classifier and cyanidation.

13. Thickened, filtered, repulped, reground, and cyanided.

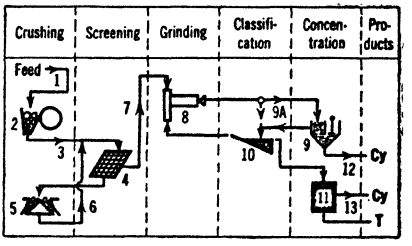

FIG. 59. BUENA VISTA MINING CO.

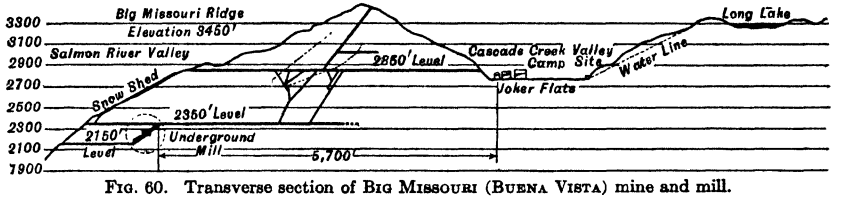

FIG. 60. Transverse section of BIG MISSOURI (BUENA VISTA) mine and mill.

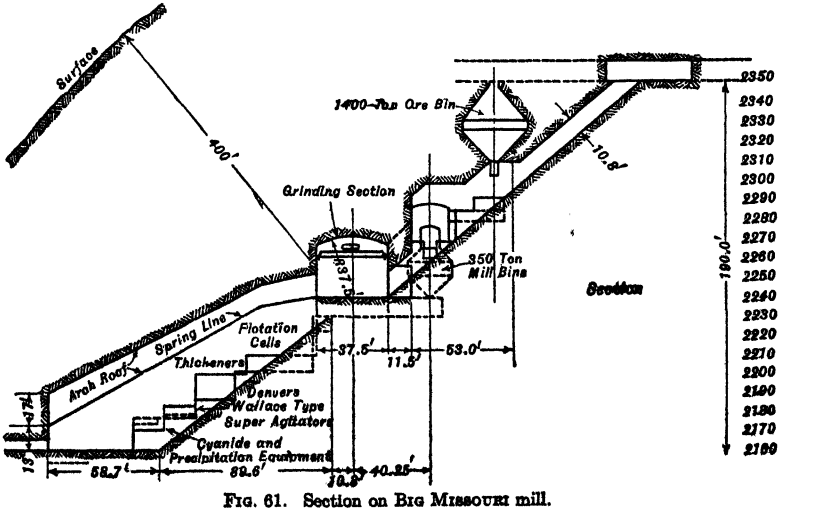

FIG. 61. Section on BIG MISSOURI mill.

Capacity: 750 tons per 24 hr.
Recovery: Flotation and jigging, 95%; cyanidation, 95%.
Ratio of concentration: 16 : 1.
Water: Comes from drainage ditch on 2,350-ft. level (see Fig. 60).
Power: Company-generated.
Mill building: Underground (see Figs. 60 and 61). Unheated. Country is steeply mountainous Sixty feet of snowfall between Oct. and Apr.

Summary. Two-stage crushing, 1-stage grinding to 65-m., gravity concentration and flotation with rejection of about 95% of feed. Regrind and cyanidation of gravity and flotation concentrate.

Suyoc Consolidated Mining Co. Fig. 62 (*Q* by John N. Butler, Ass't Mill Sup't; *138 J 415*).

Location: Near Baguio, Mountain Province, Philippine Islands.
Ore: Chalcopyrite, 0.32%; pyrite, 8.15%, sphalerite, 0.29%; galena, 0.97%; calcite, 5.35%; insol., 85.5%.
Capacity: 220 tons per 24 hr.
Assays: Feed: Au, 0.343 oz. per ton; Cu, 0.15%; Fe, 3.9%; Zn, 0.2%; Pb, 0.84%; CaO, 3.0%; insol., 85.5%; concentrate: Au, 2.526 oz. per ton; Ag, 7.5 oz.; Cu, 1.85%; Fe, 28.9%; Zn, 3.0%; Pb, 1.7%; insol., 31.0%.
Recovery: Au: flotation, 90%; cyanidation, 96%; overall, 86 to 88%.
Ratio of concentration: 12 : 1.
Water by gravity via pipe line 1 mi. from creek; CONSUMPTION, 4.72 tons per ton of feed, no reclamation.
Power: Generated at 440-volt by Diesel unit at plant; motors, 440-volt 60-cycle; CONSUMPTION, 23.6 hp-hr. per ton milled.
Labor: Native with American shift bosses; 4.45 tons per man-shift, operating; 12.52 tons per man-shift, repairs.
Running time: Crushing, 87% on 2-shift basis; grinding and flotation, 98%; cyanidation, 100%. Principal causes of lost time are routine repairs.
Mill building: Sloping site. Wood frame with galvanized-iron cover, wood and concrete floors. Unheated.
Machinery handling: Chain blocks throughout except for an electric hoist on a hand-operated traveling beam in the grinding department.
Tailing disposal: Run directly to Suyoc River.
Transport distances: 1 1/4 mi. mine to mill by truck. Concentrate directly to cyanide plant.

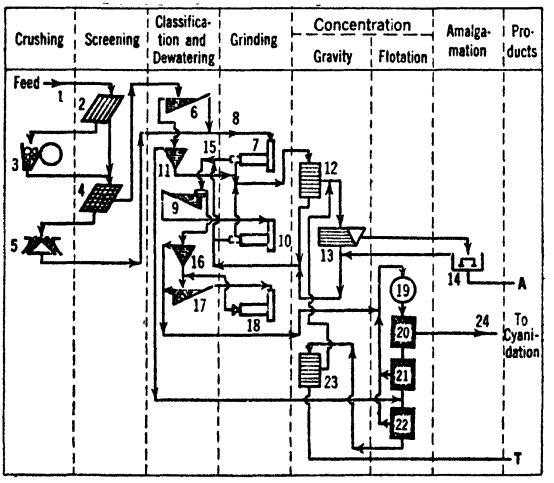

Legend for Fig. 62:

1. Bin; belt feeder.
2. 2 grizzlies in parallel.
3. 2 @ 8×16-in. single-toggle crushers in parallel.
4. Wash trommel.
5. 1 @ 2-ft. standard cone crusher.
6. Drag classifier.
7. 1 @ 5×8-ft. Eimco ball mill with 1/4-in. trunnion trommel.
8. 1 @ 230-ton bin with belt feeder.
9. 1 @ 13-ft. duplex bowl-rake classifier.
10. As (7).
11. 1 @ 6×6-ft. (square) pyramidal classifier.
12. 3 @ 30-in.×20-ft. corduroy tables in parallel.
13. 1 @ 4×7-ft. Wilfley table.
14. 2 amalgamating pans.
15. Bucket elevator.
16. 2 as (11) in series.
17. 1 @ 3-ft. simplex rake classifier.
18. 1 @ 4×4-ft. ball mill.
19. 1 @ 9×9-ft. conditioner, 172 r.p.m., 23 min. at 19% solids, *p*H 7.9 to 8.1; 230 t.p.d.; 2.1% >80-m., 81% <200-m.; assay: 0.11% Cu, 3.9% Fe, 0.20% Zn, 0.84% Pb, 3% CaO, 85% SiO_2, 0.236 oz. Au.
20. 2 @ 56-in. Fagergren cells in series, 580 r.p.m., rubber-covered impeller and cage, 12 hp. motors; about 13 1/2 min. time-factor through (20), (21), (22); 18% solids; *p*H 7.8. Concentrate: 1.85% Cu, 3.0% Zn, 1.70% Pb, 28.9% Fe, 2.526 oz. Au; tailing, 0.043 oz. Au.
21. 4 as (20).
22. 2 as (20).
23. 4 tables as (12).
24. 1 @ 14-ft. thickener; 1 @ 4-disk 4-ft. American filter.

FIG. 62. SUYOC CONSOLIDATED MINING CO.

Summary. Two-stage crushing; 3-stage grinding (first stage open-circuit) with gravity concentration in the grinding circuit. Gravity concentrate amalgamated. Flotation by a rougher-scavenger routing with rejection of tailing and cyanidation of concentrate.

Flotation + cyanidation of tailing

This treatment is practiced when there are sulphide or other floatable cyanicides in the ore (*e.g.*, sulphides of copper, arsenopyrite, pyrrhotite, bismuth, carbonaceous matter), or the gold is in both sulphides and gangue but that in the gangue is relatively coarse while that in the sulphides is relatively fine. Concentrate may also be cyanided after removal of cyanicides, as by roasting.

A. S. and R. Co., Octave mine. Fig. 63 (*6991 IC 15*).

Location: Octave, Ariz.

Ore: Gold with galena, chalcopyrite, bornite, and pyrite in quartz veins in granodiorite.

Capacity: 90 to 100 tons per 24 hr.

Assays: Feed, 0.3 oz. Au per ton; concentrate, 12.5 oz. Au and 15 oz. Ag; Pb, 8.5%; Cu, 1%. Flotation tailing, 0.05 oz. Au.

Recovery: By flotation: Au, 83.6%; Ag, 74%; Pb, 80%; Cu, 80%. By cyanidation: Au, 11.4%; Ag, 10.5%. Total, Au, 95%; Ag, 84.5%.

Ratio of concentration: 35 to 45 : 1.

Water piped 8 mi. by gravity.

Power: Purchased at 44,000 volts; motors, 440-volt.

Labor: 9 to 10 tons per man-shift.

Millsite steeply sloping.

Transportation: Mine at mill. Nearest railroad, 12 mi.

Costs (1935): Labor, $0.52 per ton; supplies, 0.44; power, 0.60; reagents, 0.24; hauling concentrate, 0.07; maintenance, 0.25; superintendence and royalty, 0.10; total, $2.22.

Legend for Fig. 63:

1. Feed sledged through 6-in. grizzlies on 2 @ 120-ton bins.
2. Grizzly, 1-in. spacing.
3. 1 @ 9×16-in. jaw crusher, 3/4-in. open setting.
4. Belt conveyor, +18°; 60-ton bin with belt feeder.
5. 1 @ 6×6-ft. ball mill, manganese-steel liners (life about 9 mo.), 12,000 lb. @ 4-in. steel balls (4.5 lb. per ton).
6. Duplex rake classifier; overflow <80-m., 75% <200-m.
7. 1 @ 6-cell mechanically agitated flotation machine; *a* = cell 1, *b* = cell 2, *c* = cell 3, *d* = remainder.
8. Thickener; 2×4-ft. drum filter; drying floor.

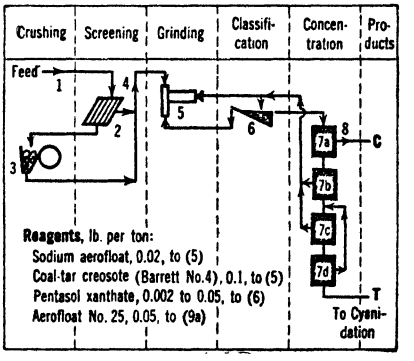

FIG. 63. A. S. & R. Co., OCTAVE mine.

Summary. One-stage crushing and one-stage grinding to 80-m. Flotation (rougher-scavenger routing with middling regrind) makes 88% of the total recovery. Flotation tailing (the copper minerals having been removed) is cyanided by agitation without further grinding.

Idaho Maryland Mines Corp. Fig. 64 (Q by H. E. Viets).

Location: Grass Valley, Calif.

Ore: Gold and about 2% of sulphides (pyrite, 90%; galena, 5%; chalcopyrite, 3%; sphalerite, 2%) in gangue comprising quartz (50 to 65%) and a wall rock consisting of 20 to 30% carbonates; 40 to 50% hornblende, feldspar, chlorite, and sericite; and 15% of talcy materials.

Capacity: 400 tons per day (for the Idaho plant of which the flowsheet is given; additional ore, amounting to 200 t.p.d., is milled at the Brunswick and Forbestown mills).

Assays: Feed, $25 per ton ($35 gold); tailing, 50¢ to $1.

Recovery: 98%.

Water: Purchased. Approximately 15 tons in circuit per ton of ore milled; none re-used.

Power: Purchased. Transmitted at 4,000 volts; motors, 440-volt, 60-cycle. 2.4 connected hp. per ton milled.

Labor: American. 23 tons per man-shift operating; 400 tons, repairs.

Running time: 95%. Principal cause of loss is ball-mill relining.

Mill building: Sloping site. Wood frame, corrugated iron enclosure; cement floors, 1/2 in. per ft. slope. Heated.

Distances: Mine to mill, 0.9 mi., truck transport. Railroad on property.

Summary. One-stage open-circuit crushing and two-stage closed-circuit grinding to 100 *mog*, with Hungarian riffles in the primary circuit and shaking tables in the secondary circuit. Plate amalgamation of primary pulp, and barrel amalgamation of riffle concentrate

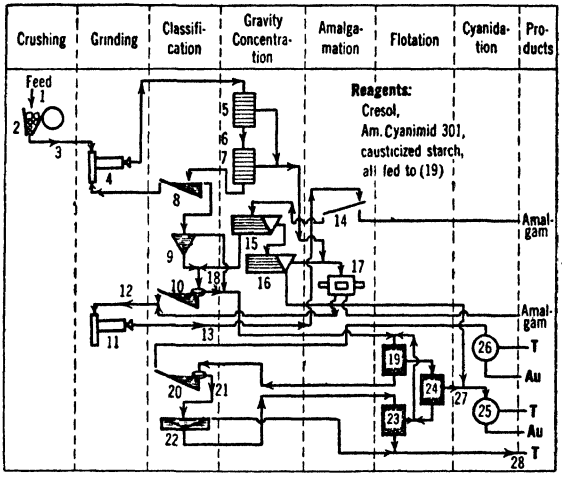

Legend for Fig. 64:

1. 200-ton shaft bin.
2. 18×30-in. Blake crusher, 4-in. open setting.
3. 200-ton bin; truck to mill; 750-ton mill bin; 5 Challenge feeders; 18-in. conveyor.
4. 1 @ 8×6-ft. Marcy ball mill.
5. 40-sq. ft. Hungarian riffles.
6. 4-in. Wilfley pump.
7. 175-sq. ft. Hungarian riffles.
8. 1 @ 8×21 2/3-ft. duplex rake classifier.
9. Spitzkasten.
10. 1 @ 12 (diam.) ×8×30-ft. bowl-rake classifier.
11. 1 @ 7×5-ft. ball mill.
12. Flight conveyor.
13. 4-in. Wilfley pump.
14. Amalgamating plates.
15. 2 Deister tables.
16. 1 Wilfley table.
17. Amalgamating barrel.
18. 4-in. Wilfley pump.
19. 8 @ 56-in. round Fagergren flotation cells in series, 600 r.p.m., rubber-covered impeller and cage last 7 mo.; 10-hp. motors. Feed, 7% >100-m., 72% <200-m.; *p*H about 8.6, 21% solids; tailing, 0.03 oz. Au, 0.1 oz. Ag.
20. 1 @ 25 (diam.) ×8×41 2/3-ft. bowl-rake classifier.
21. 4-in. Wilfley pump.
22. 1 @ 55×14-ft. thickener.
23. 5 @ 56-in. square Fagergren cells, 600 r.p.m., rubber-covered impeller and cage last >2 yr.; 10-hp. motors. Feed, 15% solids, *p*H 8; concentrate, 0.12 oz. Au; tailing, 0.015 oz. Au.
24. 6 Kraut flotation cells: 900 r.p.m., rubber-covered impeller lasts 4 yr., cast-iron bell, 4 yr.; 7 1/2-hp. motors. Feed, 17% solids, *p*H 8.6; concentrate, 4 oz. Au, 3 oz. Ag per ton; tailing, 0.03 oz. Au.
25. Regrinding and cyanidation.
26. Sand leaching.
27. Thickening and filtration.
28. 0.03 oz. Au, 0.1 oz. Ag.

FIG. 64. IDAHO MARYLAND MINES CORP.

and table gold streak. Rougher-scavenger routing with intermediate desanding and thickening; one cleaning with one-stage counterflow of cleaner tailing. Flotation sand tailing sand-leached and all sulphide concentrate reground and slime-leached.

Mammoth-St. Anthony, Ltd. Fig. 65 (Q by Foster S. Naething).

Location: Mammoth, Ariz.

Ore: Cerussite, anglesite, wulfenite, mohramite, psilomelane, smithsonite, vanadinite, chrysocolla, descloizite, iron oxides, barite, calcite, feldspar, quartz, with gold and silver.

Capacity: 550 to 600 tons per 24 hr.

Assays: See Table 48.

Recovery: Au, 90%; Ag, 35%; MoO_3, 85%; V_2O_5, 55%.

Ratio of concentration: 36 : 1.

Labor: American and Mexican. Tons per man-shift: operating, 35; repairs, 50.

Running time: 98.5%. Loss due principally to power failure, pump repairs, ball-mill relining.

Water: Mine water pumped 1/2 mi. at a consumption of 100 hp. CONSUMPTION, 2.0 tons per ton of ore milled.

Building: Timber frame, corrugated-iron cover, concrete and wood floors sloping 1/8 in. per ft. in wet parts. (Floors stay dry except where there is continual leakage.) Occasional heating by stoves. Site level.

Machinery handling: Chain blocks.

Power: Purchased. Comes 50 mi. at 44,000 volts. Motors, 440-volt 60-cycle. CONSUMPTION: 25 hp-hr. per ton milled.

Transportation: Nearest railroad, 25 mi. Ore transported 1/2 mi. by motor truck; concentrate trucked 1 mi. to smelter.

Tailing: Pumped through 5-in. pipe to dam and discharged onto face through 2-in. pipes spaced 5 to 18 ft. apart along 5-in. main.

Summary. Crushed from run-of-mine (small head-size) to <8-m. table feed by gyratory, short-head cone and rod mill in series, the latter in closed circuit with a vibrating screen. Table tailing ground to 10% >65-m., 50% <200-m. in one ball mill in closed circuit with a rake classifier. A table concentrate is scalped out of the 8-m. rod-mill product by shaking tables, which return middling to the rod-mill circuit and send tailing to the ball-mill circuit. Flotation is essentially by two successive circuits on rougher-cleaner flows with one cleaning of gold concentrate, two cleanings of oxide concentrate. Sand tailing is cyanided.

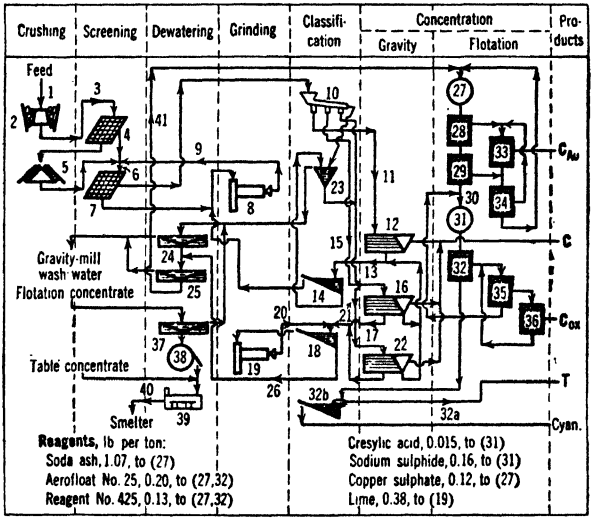

Legend for Fig. 65:

1. 300-ton coarse-ore bin; 2 @ 24-in. apron feeders.
2. 1 @ No. 4 McCully gyratory.
3. 1 @ 16-in. belt conveyor with magnetic head pulley.
4. 1 @ 24×54-in. Robins screen, 1/2-in. aperture.
5. 1 @ 3-ft. short-head cone crusher.
6. Merrick weightometer, 1 @ 16-in. conveyor, chain-and-bucket sampler, 12-in. bucket elevator, 500-ton bin, 4 @ 14-in. belt feeders, 1 @ 16-in. conveyor, 1 @ 16-in. bucket elevator.
7. 2 @ 4×5-ft. Leahy screens, 8-m. aperture.
8. 1 @ 6×4 1/2-ft. Marcy ball mill.
9. To 16-in. bucket elevator, note 6.
10. 10-cell St. Joe classifier.
11. Spigots 1 to 2.
12. 2 Deister Plat-O tables.
13. 1 @ 3-in. Wilfley pump.
14. 1 @ 4-ft. rake classifier.
15. Spigots 3 to 8.
16. 1 Deister Plat-O and 2 Deister-Overstrom tables.
17. 1 @ 2-in. Wilfley pump.
18. 1 @ 6-ft. rake classifier.
19. 1 @ 6×4 1/2-ft. Marcy ball mill.
20. 1 @ 3-in. Wilfley pump.
21. Spigots 9, 10.
22. 1 Deister-Overstrom table.
23. 1 @ 8-ft. cone.
24. 1 @ 40-ft. thickener.
25. 1 @ 40-ft. thickener.
26. 1 @ 3-in. Byron Jackson pump.
27. 1 @ 5-ft. conditioner, 350 r.p.m. Treatment time, 3 min. *p*H 9.0, 45% solids.
28. Cells 3 to 5 of 1 @ 8-cell No. 18 Denver Sub-A machine, 310 r.p.m., 3.8 hp. per spindle. Pulp, 45% solids, *p*H 9; time-factor, 10 min. through (28) and (29).
29. Cells 6 to 8 of same machine as (28).
30. 1 @ 3-in. Wilfley pump.
31. 1 @ 7-ft. conditioner. Treatment time, 6 min.; *p*H 9.2; 40% solids; temperature about 10° >atmospheric.
32. Cells 4 to 8 of 1 @ 8-cell No. 21 Denver Sub-A machine, 308 r.p.m.
32*a*. 1 @ 6×16-ft. bowl-rake classifier.
32*b*. 3-in. Wilfley pump.
33. Cell 1 of same machine as (28).
34. Cell 2 of same machine as (28).
35. Cells 2 to 3 of same machine as (32).
36. Cell 1 of same machine as (32).
37. 1 @ 18-ft. thickener.
38. 1 @ 6×5 1/3-ft. Oliver filter. Cake, 15% water.
39. 1 @ 4×27-ft. Lowden drier. Flotation conc., 4% water; table concentrate, 1% water.
40. Flight conveyor, 1-ton bin, sacks.
41. 23 t.p.h.

FIG. 65. MAMMOTH-ST. ANTHONY.

Table 48. Assays, Mammoth-St. Anthony

Flow-sheet symbol	Material	Assays				
		Oz. per ton		Percentages		
		Au	Ag	Pb	MoO_3	V_2O_5
12	Table concentrate	2.62	1.88	49.49	11.02	3.01
27	Feed, gold rougher	0.16	0.41	1.60	0.20	0.18
31	Feed, oxide rougher	0.095	0.36	1.23	0.03	0.13
28	Concentrate, gold rougher	3.87	0.52	38.0	10.01	5.83
32	Concentrate, oxide roughers	0.59	1.38	30.1	1.89	3.82
29	Tailing, gold roughers	0.05	0.22	0.86	0.05	0.08
32	Tailing, oxide roughers	0.025	0.22	0.32	0.025	0.07
33	Concentrate, gold cleaners	17.64	12.78	37.30	12.45	2.65
36	Concentrate, oxide cleaners	0.92	1.62	57.90	3.94	2.30
34	Tailing, gold cleaner	0.58	1.06	36.5	7.92	7.05
36	Tailing, oxide cleaner	0.45	0.99	18.00	1.06	3.95
.....	Tailing, sand to cyanidation	0.051	.....	0.26	0.01	0.03

Flotation ± gravity concentration and/or amalgamation

This flowsheet is followed today at a large number of gold mills. The method is primarily applicable to ores in which the gold occurs in the sulphides, and the latter have independent value (Cu, Pb, Zn, etc.) or are not amenable to cyanidation. The method is, however, also used at small mines, or mines in the development stage, for ores amenable to cyanidation, when the more elaborate and expensive cyanide equipment is not justified or not within reach of the owner's purse. (A cyanide plant for a small daily tonnage costs two to three times as much as a simple concentration or amalgamation plant, and not infrequently the bulk of the gold is freed at 48 to 65 *mog.*)

Gold-flotation flowsheets vary tremendously in detail, but broadly gravity concentration ± amalgamation precedes flotation when a part of the gold is coarse or the sulphides are coarsely dispersed, whereas with fine gold and fine sulphides all concentration is done by flotation; occasional coarse valuable particles in such an ore can be taken care of by a jig or table scavenging flotation tailing.

Small plants comprise one-stage crushing and one-stage closed-circuit ball milling to flotation size. For tonnages in excess of 150 t.p.d. practice tends to make ball-mill feeds $<^3/_8$-in. maximum. In general this will require a second crushing stage, usually in closed circuit with a screen. Flotation flowsheets depend upon the disposition of concentrate; if this is to be cyanided, or shipped a short distance only, recovery is more important than grade and a simple rougher-scavenger flow is used; if freight and treatment charges are high, grade becomes important and the rough concentrate is usually cleaned once or twice with one-stage counterflow of cleaner tailing. Gravity concentration (jigs, blankets, or tables) is inserted in the grinding circuit if free gold or gold-bearing sulphide in appreciable quantities is present at sizes coarser than 65-m. Blankets are placed in tailing launders at BRITANNIA and at UTAH COPPER CO. to scavenge minute amounts of gold not saved in the regular copper flotation.

Golden Belt Mines, Inc. Fig. 66 (*IC 6905*).

Location: Near Cleator, Yavapai County, Ariz.

Ore: Stringers of pyrite and galena, and of quartz with disseminated sulphides in schist. Not amenable to cyanidation or amalgamation. Gold follows galena.

Capacity: 50 tons per 24 hr.

Assays (one day): Feed, 0.21 oz. Au, 2 oz. Ag; concentrate, 2.62 oz. Au, 19.7 oz. Ag, 14.2% Pb; tailing, 0.01 oz. Au, 0.31 oz. Ag.

Recoveries (average): Au, 95%; Ag, 80%.

Ratio of concentration (one month): 14.5 : 1.

Water is pumped from the mine.

Power is purchased on an 80-kw. demand basis at a sliding scale ranging from 2.5 to 1¢ per kw-hr. Comes in at 11,000 volts; 440-volt motors.

Mill building: Sloping site. Wood.

Transportation: Mill at mine. Concentrate sacked and trucked to El Paso, Tex., at $8.15 per ton (1936).

Costs (operating only): Labor, $0.57 per ton; supplies, 0.14; power, 0.31; total, $1.02.

Summary. Run-of-mine hand-picked for waste, crushed to 1- to 2-in. in one stage and ground to flotation-feed size in one stage closed-circuit. Flotation concentration by simple rougher-scavenger routing.

Legend for Fig. 66:

1. Ore from mine to 3-ton hopper.
2. 1 @ 16-in.×10-ft. picking belt, 21 f.p.m., 2-hp. motor. Two men sort one carload of ore in about 5 min. Rejection of waste is about 33%.
3. 1 @ 7×10-in. Blake crusher, set 1-in. (1.5-in. on wet ore), 15-hp. motor.
4. 1 @ 35-ton bin; Challenge feeder.
5. 1 @ 4×5-ft. ball mill, 4-in. balls.
6. 1 @ 6×20-ft. duplex drag classifier.
7. 4-cell flotation machine; *a* = first two cells.
8. Directly to 1 @ 1×4-ft. drum-type filter.

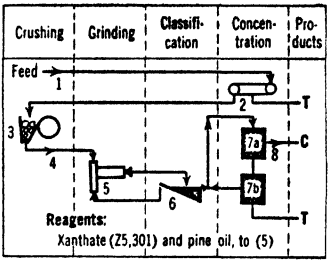

FIG. 66. GOLDEN BELT MINES.

This is about as simple a flowsheet as can be used on an ore not amenable to amalgamation. Smelter charge on concentrate is about $5 per ton. Recovery is excellent.

Premier Gold Mining Co. Fig. 67 (*IC 6742*).

Location: Premier, B. C.
Ore: Auriferous pyrite with small amounts of lead, zinc, and copper in highly siliceous gangue.
Assays: See Table 49.
Recovery: Au, 96.7%; Ag, 87.7%. See also Table 50.
Ratio of concentration: 8.6 : 1.
Capacity: Tons per 24 hr., 450 to 475.
Water: Gravity flow from upper workings of mine; tons per ton of ore milled, net, 3.5.
Labor: 19 tons per man-shift, total.
Power: Company-generated, 1/2 mi. from mill; Diesel and hydroelectric; transmitted at 2,300 volts; motors, 440-volt. CONSUMPTION, hp-hr. per ton: Crushing, 5.0; grinding and classification 18.0; flotation, 8.3; filtering, 1.7; pumping, 7.8; lighting, 1.3; total, 42.1.
Costs: Cents per ton (1931): Crushing, 16.2; grinding and classification, 46.5; flotation, 18.0; filtering, 5.1; pumps, pipe lines, and launders, 9.0; lubricants, 0.9; lighting, 0.8; heating, 0.8; miscellaneous, 3.0; superintendence, 6.4; total, $1.07.

Legend for Fig. 67:

1. Through 12-in. grizzly on 100-ton mine-ore bins.
2. 1 @ 18×30-in. Blake crusher, 3-in. open setting.
3. Two belt conveyors in series; suspended magnet over each, 100-ton mill bin. 34% >3-in.
4. No. 2 Niagara screen, 1-in. aperture. Oversize, 41% >3-in., 3% <1-in. Undersize, 45% >1/2-in., 35% <1/4-in.
5. 12-in. McCully gyratory, 1 1/4-in. open setting.
6. Conveyors and elevator to 2 ball-mill feed bins, 100- and 150-ton capacity, with belt feeders. 18% >1-in., 31% <1/4-in.
7. 1 @ 8-ft.×36-in. Hardinge Mill and 1 @ 64 1/2 Marcy mill.
7a. 1 @ 6×20-ft. and 1 @ 4 1/2×14 2/3-ft. rake classifier.
8. 2 Galigher samplers; 2 @ 4-in. Wilfley sand pumps.
9. 3 Premier cascade flotation cells (2 following Hardinge, one following Marcy).
10. 3 @ 4-ft. Premier classifiers.
11. 1 @ 5×8-ft. A-C ball mill and 1 @ 4×8-ft. tube mill.
12. 2 banks of 3 Premier cascade flotation cells.
13. 2 cone classifiers.
14. 1 rake classifier.
15. 1 @ 6-ft.×16-in. Hardinge ball mill.
16. 2 @ 2-in. Wilfley sand pumps.
17. 2 @ 12-cell 24-in. M-S subaeration machines in series.
18. 2 @ 12-ft. double-spitzkasten K. and K. machines in series, in parallel with 17.
19. Overflow from cells 1 to 4 of (17).
19a. Overflow from first machine of 18; 2-in. Wilfley pump.
20. 1 @ 12-ft. 2-spitzkasten K. and K. machine.
21. Froth from cells 5 to 24 of (17) and second machine of 18.
22. 1 @ 30-ft. thickener.
23. 1 @ 18-ft. thickener.
24. 1 @ 5 1/3×4-ft. and 1 @ 5 1/3×6-ft. Oliver filters.
25. 1 @ 30-ft. thickener

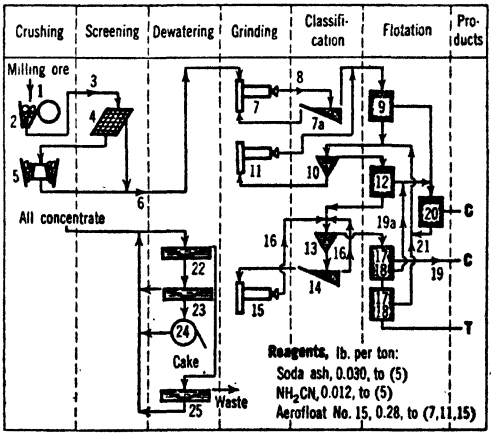

FIG. 67. PREMIER GOLD MINING CO.

Table 49. Assays at Premier

Material	Assays					
	Oz. per ton		Percentages			
	Au	Ag	Pb	Zn	Fe	Insol.
Feed	0.35	6.55	0.7	1.7	6.0	74.2
Concentrate	2.82	53.73	4.3	10.3	31.7	9.6
Tailing	0.013	0.91	0.2	0.6	2.6	82.6

Table 50. Sizing-assay test of concentrate and tailing at Premier

Material	>150-m.			150~200-m.			<200-m.		
	Wgt., %	Oz. per ton		Wgt., %	Oz. per ton		Wgt., %	Oz. per ton	
		Au	Ag		Au	Ag		Au	Ag
Concentrate	29.6	4.47	39.26	11.4	2.96	33.92	59.0	1.92	64.80
Tailing	12.9	0.021	0.98	12.6	0.022	0.90	74.5	0.013	0.81

Summary. Two-stage crushing to 1 1/2-in.; 3-stage grinding to 50-m. with flotation in the primary (2-stage) circuit. All-flotation concentration, four stages on the primary run with two regrinds on underflow and regrind of scavenger and cleaner middlings prior to return to the head of the primary circuit. The flow is interesting in that step removal of the gold permits definitely coarser over-all grinding (70% <200-m. *vs.* 81% <200-m.) than a flow without middling regrind. The coarser grinding has also been of marked benefit in concentrate dewatering.

London Mines & Milling Co. (*North London mill*). Fig. 68 (*7101 IC 34*).

Location: About 8 mi. west of Alma, Colo.

Ore: Auriferous pyrite and free gold with small amounts of galena and chalcopyrite in quartz veins in quartzite, porphyry, limestone, and carbonaceous shale; not amenable to cyanidation on account of the shale.

Capacity: 100 t.p.d.

Assays, oz. Au per ton: Feed, 0.32; concentrate: high-grade streak from tables, 43.0; remaining table plus flotation, 2.43; tailing, 0.023.

Recovery: 93.7%.

Ratio of concentration: 10.4 : 1.

Water comes by flume to foot of mill.

Power: Purchased at 13,000 volts: motors, 440-volt.

Labor: Tons per man-shift, total, 14.

Legend for Fig. 68:

1. R.o.m. <6-in., dumped by hand.
2. 1 @ 3×10-ft. trommel, 2 1/4-in. aperture.
3. 15-ton bin with sorting chute; 15 to 18% of ore mined rejected as waste.
4. 30-ton bin; 3,300-ft. aerial tram; 30-ton bin; hand-controlled chute feed to crusher (5).
5. 1 @ 10×16-in. jaw crusher, 1/2-in. set, 275 r.p.m., 30-hp. motor.
6. 100-ton bin; separate cars on aerial tram (4); surge bin.
7. Vibrating screen, 1 1/4-in. aperture; about 30% oversize.
8. 250-ton bin; oscillating feeder.
9. 1 @ 5×6-ft. cylindrical ball mill, 28 r.p.m., 100-hp. motor; 6,000 lb. 4-in. cast chrome-molybdenum steel balls and liners. Ball cost, 14.5¢ per ton milled.
10. Vibrating screen, 1/8×1/4-in. aperture.
11. 1 @ 3×15-ft. rake classifier, 200% circulating load.
12. 1 @ 2-in. centrifugal pump.
13. 2 Card tables in parallel, 270 s.p.m.
14. 1 Card table. The combined concentrates from (13) and (14) comprise 50 to 67% of all gold recovered.
15. 1 @ 3-in. centrifugal pump.
16. As (12).
17. 1 @ 6-cell flotation machine; *a* = cells 1 to 4.
18. As (14).

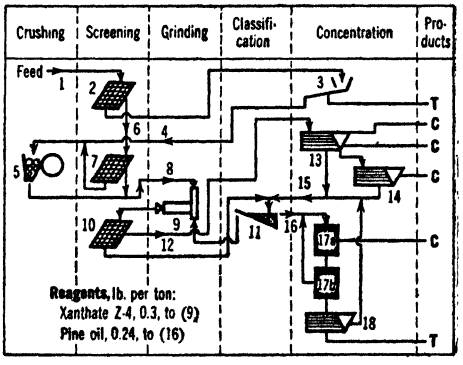

FIG. 68. LONDON MINES & MILLING CO.

Transportation: Mine to mill, 3,300 ft. by aerial tram; mill to smelter at Leadville by truck, $4.50 per ton.

Costs, operating (1937): Labor, $0.52 per ton mined; supplies, 0.24 (includes 14.5¢ per ton milled for grinding-steel and 7.8¢ for flotation reagents); repairs, 0.03; power, 0.18; total $0.97.

Summary. One-stage crushing and one-stage grinding to flotation-feed size, with high-grade concentrate scalped out of the grinding circuit by tables. Flotation concentration by a simple rougher-scavenger routing.

Cardinal Gold Mining Co. Fig. 69 (*IC 7012*).

Location: Bishop Creek, Calif.

Ore: Gold in arsenopyrite and wollastonite, associated with small amounts of pyrrhotite, pyrite, chalcopyrite, and sphalerite in a tough, hard garnetiferous quartzite. Amalgamation, and tabling plus cyanidation of tailing have both proved unsuccessful.

Capacity: 300 tons per 24 hr.

Assays: See Table 51.

Recovery: Au, 90%.

Ratio of concentration: 32 : 1.

Labor: 30 tons per man-shift, total.

Transportation: Mill at mine. Concentrate trucked 23 mi. to Laws, Calif., at $2.50 per ton; thence by narrow-gage to Mina, Nev., and by standard-gage to Midvale, Utah, at an additional cost of $10.70 to $12.50 per ton, according to grade. Total concentrate liquidation charges amounted (1937) to $1.37 per ton of ore milled.

Costs (June, 1937): Labor, $0.33 per ton milled; power, 0.28; supplies, 0.21; maintenance, 0.33; miscellaneous, 0.09; total, $1.24.

Table 51. Assays at Cardinal mill

Material	Assays						
	Oz. per ton		Percentages				
	Au	Ag	Cu	Fe	Zn	S	Insol.
Feed	0.27						
Table conc.	115.0	22.5	0.3	38.3	0.4	16.2	4.0
Flotation conc.	6.9	1.7	1.8	36.3	0.5	24.2	12.8
Tailing	0.03						

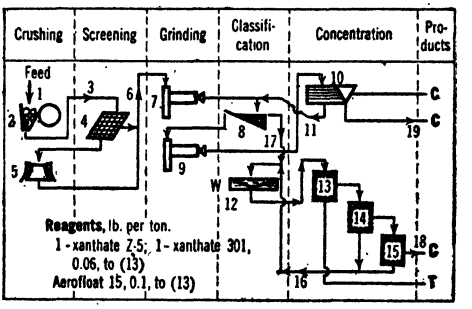

Legend for Fig. 69:

1. 2 @ 15-ton wooden skip pockets; 1 @ 36-in. pan conveyor.

2. 1 @ 10×24-in. Blake-type jaw crusher, set 4-in.

3. 1 @ 20-in. belt conveyor; pancake suspended magnet.

4. 1 @ 2×8-ft. Jeffrey-Traylor 60-cycle vibrating grizzly, 1-in. aperture.

5. 1 @ 20-in. Traylor TY reduction gyratory, set 1/2-in.

6. 1 @ 20-in.×220-ft. inclined (18°) belt conveyor; 2 @ 250-ton laminated-wood bins.

7. 1 @ 4×10-ft. rod mill, 12 tons @ 4-in. rods, manganese-steel liners.

8. 1 @ 6×24-ft. rake classifier; overflow, 4.5% >100-m., 61% <200-m.

9. 1 @ 5×6-ft. overflow-type ball mill, 4 to 5 tons @ 4-in. pressed-steel balls, manganese-steel liners.

7–9. In a parallel one-stage grinding circuit 1 @ 7×6-ft. A-C grate-type mill is in closed circuit with a 6×23 1/2-ft. heavy-duty rake classifier. A trunnion trommel with 1/8-in. sq.-m. cloth scalps oversize to the classifier while undersize goes to a table (10), which returns tailing to the classifier. Classifiers are cleaned out once a month and the sands tabled, yielding about 20 oz. of gold each in a high-grade concentrate.

10. 2 shaking tables in parallel (1 for each section). The high-grade streak runs 110 to 120 oz. Au and 20 to 25 oz. Ag per ton; the middling streak is maintained at about 10 oz. Au per ton; combined concentrates contain about 40% of recovered Au.

11. 2 @ 2-in. Wilfley pumps.

12. 1 @ 30×10-ft. thickener; underflow, 40 to 45% solids. Gold content in flotation tailing rises from 0.02 oz. per ton at 40% solids in feed to 0.065 oz. at 15% solids.

13. 4 @ 56-in. square Fagergren cells in series.

14. 1 @ 45-in. square Fagergren cell.

15. 2 @ 36-in. square Fagergren cells in series.

16. 1 @ 2-in. Wilfley pump.

17. 1 @ 3-in. rubber-lined Hydroseal pump (Unit 1) and 1 @ 2-in. Wilfley pump (Unit 2).

18. 1 @ 12×8-ft. thickener; 1 @ 2-leaf 4-ft. American filter; 1 @ 3-compartment steam drier to 10 to 12% moisture.

19. Combined with thickener (18) underflow.

FIG. 69. CARDINAL GOLD MINING CO.

Summary. Two-stage open-circuit crushing and two-stage grinding (first stage open-circuit, second closed) with tabling between stages. Rougher and 2-stage cleaner flotation.

St. Joe Mining & Milling Co. Fig. 70 (*IC 6976*).

Location: Rowena, Colo.
Ore: Tellurides of gold and silver closely associated with pyrite and some native metal, together with minor amounts of marcasite and arsenopyrite in a gangue of quartz and iron oxides.
Capacity: 90 tons per 24 hr.
Assays: Feed, 0.219 oz. Au and 0.366 oz. Ag per ton; concentrate, 2.851 oz. Au and 3.013 oz. Ag; tailing, 0.021 oz. Au and 0.167 oz. Ag.
Recovery: Au, 91.0%; Ag, 57.7%.
Ratio of concentration: 14.3 : 1.
Water consumption: 4 tons per ton of ore.
Power consumption: 28 hp-hr. per ton of ore.
Labor: 7.2 tons per man-shift, total.
Running time: 87%.
Transportation: Feed is trucked 8 mi. over a steep dirt road at a cost of 75 to 85¢ per ton; concentrate (10 to 12% moisture) is trucked 21 mi. to the railroad at Boulder, thence by rail 110 mi. to Colorado City or 150 mi. to Leadville; freight rates range from $1.50 to $5.00 per ton according to destination and value of concentrate.
Costs: $1.69 per ton of ore milled.

Legend for Fig. 70:

1. Grizzly with 2-in. spacing over mine bin.
2. Sorting floor over mine bin; about 10% wash removed.
3. 8-mi. truck haul to mill; 3 @ 80-ton bins with 12-in. guard grizzlies.
4. Grizzly chutes from bins, 3/4-in. spacing.
5. 1 @ 13×24-in. high-speed jaw crusher, set 3/4-in.; 360 r.p.m., 35-hp. motor.
6. 1 @ 18-in.×130-ft. conveyor; 4-ft. Snyder sampler; 300-ton bin with 24-hr. apron feeder, 4 1/2 f.p.m.; 1 @ 12-in. belt conveyor.
7. 1 @ 5×8-ft. ball mill with 6-m. 13(diam.)× 18-in. trunnion trommel, 29 r.p.m., 125-hp. motor, 4-in. forged-steel balls.
8. 1 @ 4 1/3-ft. duplex drag classifier; overflow <80-m.
9. 2 shaking tables; concentrate represents 10 to 15% recovery.

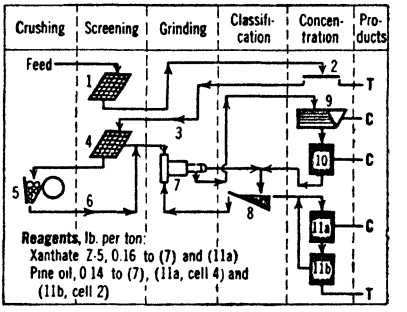

10. Unit flotation cell; concentrate represents 45% recovery.
11. 1 @ 8-cell flotation machine; *a* = cells 1 to 4; *b* = cells 5 to 8.

FIG. 70. ST. JOE MINING & MILLING CO.

Summary. One-stage crushing and one-stage grinding to 80-m. with gravity concentration and rough flotation in the grinding circuit. Final flotation by simple rougher-scavenger routing.

Golden Anchor Mining Co. Fig. 71 (*IC 7024*).

Location: Burgdorf, Idaho.
Ore: Native gold and tetrahedrite, galena, sphalerite, pyrite, and molybdenite in quartz, with schist, gneiss, and quartzite wall rock.
Capacity: 50 tons per 24 hr.
Assays (1937): Feed, 0.711 oz. Au and 2.58 oz. Ag per ton; tailing, 0.0488 oz. Au, 0.67 oz. Ag. Flotation concentrate, Au, 36.4 oz.; Ag, 53.8 oz.; Pb, 4.5%; Cu, 1.3%.
Recovery: Gold, by amalgamation, 75.6%; by flotation, 17.4%; total, 93.0%; silver, 80.7% total.
Ratio of concentration: 272 : 1.
Power: Company-generated by Diesel unit; transmitted 4 mi. at 2,200 volts, cost 1.6¢ per kw-hr.; motors, 440-volt; consumption, 30.2 kw-hr. per ton milled.
Labor: 13.5 tons per man-shift, total.
Transportation: 50 mi. from railroad; road closed to wheeled traffic 5 winter months. Mill at mine. Concentrate trucked 567 mi. to smelter at Garfield, Utah, at cost of $26 per ton.
Costs (1937): $2.70 per ton milled, including overhead and realization amounting to 89¢ per ton.

Summary. One-stage crushing and one-stage grinding to 65 *mog* with rougher-cleaner gravity concentration in the grinding circuit; ground product straked, floated, and straked, with one-stage cleaning of rough flotation concentrate. Gravity concentrate amalgamated.

Legend for Fig. 71:

1. R.o.m. sledged through 8-in. grizzly on 50-ton bin.

2. Grizzly, 3/4-in. spacing.

3. 1 @ 8×24-in. A-C jaw crusher, set 1/2 in., 230 r.p.m.

4. 50-ton bin; 15-in.×6-ft. belt feeder, 18 in. per min.

5. 1 @ 4 1/2×5-ft. overflow-type ball mill, wave-type liners, 3-in. forged-steel balls (3.6 lb. per ton), 32 r.p.m.

6. 1 @ 12×18-in. Denver mineral jig, 300 pulsations per min., 2-in. bed of 3/8-in. ball bearings; about 15 lb. of hutch concentate drawn once each shift.

7. Akins classifier, 5 1/2 r.p.m.

8. Half-size Wilfley table.

9. Amalgam barrel, run as sufficient concentrate accumulates, usually about twice per month. Charge is ground 6 hr. with Hg, lye, and about 12 @ 4-in. steel balls. Amalgam retorted; residue (assays about 14 oz. Au per ton) is shipped to smelter.

10. 3 @ 11-in.×12-ft. strakes (slope, 1 1/4 in. per ft.) in parallel, covered with rubber matting; cleaned every 2 da.

11. 1 @ 6-cell No. 15 Denver Sub-A flotation machine, fed into a conditioner cell 2; *a* = cells 2 to 6; *b* = cell 1.

12. 1 @ 11-in.×12-ft. rubber-mat strake.

13. 36-in. cone discharged by hand-operated diaphragm pump to a pressure filter. Cake 10% moisture; dried in pans and sacked.

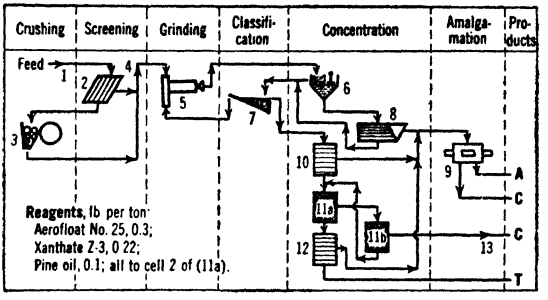

FIG. 71. GOLDEN ANCHOR MINING CO.

Pride of the West mill. Fig. 72 (*Tref 3/41*).

Location: Howardsville, San Juan District, Colo.

Ore: Gold and silver, free and associated with galena; tetrahedrite, chalcopyrite, pyrite, and sphalerite, with quartz, chalcocite, and altered andesite. The tetrahedrite carries considerable silver; the pyrite is relatively free of precious metals.

Capacity: 50 tons per 24 hr.

Legend for Fig. 72:

1. 5-ton trucks; 8-in. limiting grizzly; 50-ton bin.

2. 1 @ 2×5-ft. grizzly, 1 1/4-in. spaces; oversize discharge controlled by Ross chain, 1/2-hp. gear motor, capacity 9 t.p.h.

3. 1 @ 9×16-in. single-toggle jaw crusher, 1-in. open setting. Operates 1 @ 8-hr. shift; one man on grizzly and crusher.

4. 1 @ 14-in.×65-ft. belt conveyor, slope 4 3/4 i.p.f., 150 f.p.m., 2-hp. motor; 1 @ 160-ton bolted-steel bin; 1 @ 16-in.× 14 1/4-ft. belt feeder, slope 3 i.p.f., 1-hp. motor with reducing gear (50 : 1), 10 f.p.m.

5. 1 @ 5×5-ft. ball mill with 18×30-in. trunnion screen, 0.13-in. opening; 25.3 r.p.m.; 50-hp. 900-r.p.m. synchronous motor; 70% solids; feed, 23.9% >1-in.; screen oversize, 9% >1-in., 0.3% <6-m.; undersize, 3.5% >20-m., 14% <200-m. Forged-steel balls, 2.3 lb. per ton.

6. 1 @ 8×12-in. Denver mineral jig; concentrate 3.9 oz. Au, 15.1 oz. Ag, 82.8% Pb, 0.8% Zn; recovery of gold, 59.5%.

7. Concentrate: 3.9 oz. Au, 15.1 oz. Ag, 83% Pb, 0.8% Zn; 60% recovery of gold; 1.2% >10-m., 8.3% <65-m.

8. 1 Denver No. 250 unit cell, 5-hp. motor. 4 tons concentrate per day.

9. Concentrate: 0.1 oz. Au, 15.0 oz. Ag, 69.5% Pb, 2.5% Zn, 1.1% insol.; 13.7% recovery of gold; 0.9% >65-m., 75% <200-m.

10. 1 @ 30-in. Akins classifier, slope 4 in. per ft., 8 r.p.m., 2-hp. motor. Sand: 5% >14-m., 26% <100-m., 0.07 oz. Au, 2.75 oz. Ag, 5% Pb, 4.9% Zn, 7% Fe. Overflow, 34% solids, 0.02 oz. Au, 2.1 oz. Ag, 4.3% Pb, 4.6% Zn; 2.1% >65-m., 60% <200-m.

11. 2.2% >28-m., 15.3% <200-m.

12. 1 @ 6-cell No. 18 (28×28-in.) Denver Sub-A flotation machine, 3 @ 2-hp. motors. 12*a* is cell 2; 12*b* is cells 3 to 6; 12*c* is cell 1.

13. 1 @ 6×6-ft. conditioner, 8-hp. motor, 25% solids, 40 min. contact.

14. As (12).

15. 1 @ 4-ft. 4-leaf American filter, 3/4-hp. motor. 3 leaves for Pb, 1 for Zn.

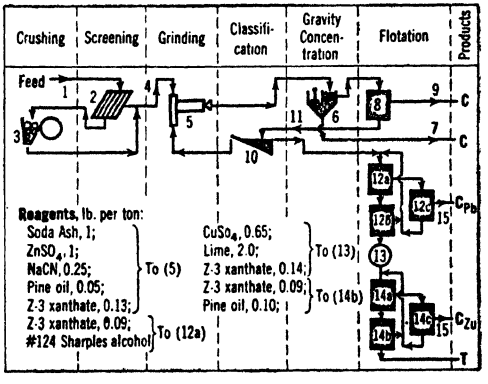

FIG. 72. PRIDE OF THE WEST.

Assays: See Table 52.
Recovery: Au, 87.8%; Ag, 81.5%; Pb, 96.4%; Zn, 68.8%.
Ratio of concentration: Pb, 6.2 : 1; Zn, 20 : 1.
Power: Purchased. Comes in at 17,000 volts; motors 440- and 220-volt. Cost: $6.50 per peak-load hp. per mo.
Water pumped against 100-ft. head from a nearby creek.
Mill building: Slightly sloping site. Wood frame, siding insulated and covered with galvanized sheet steel. Concrete foundations and floors. Heated.
Cost: $1.75 per ton milled.

Table 52. Assays at Pride of the West mill

Material	Assays				Weight, %
	Oz. per ton		Per cent.		
	Au	Ag	Pb	Zn	
Feed	0.06	3.3	10.4	4.3	100.0
Lead conc.	0.32	16.5	61.8	6.4	16.2
Zinc conc.	.....	.....	1.5	59.6	5.8
Tailing	0.005	0.5	0.35	0.4	78.0

Summary. One-stage open-circuit crushing and 1-stage closed-circuit grinding from 8-in. to 48 *mog*. Jig and unit cell in series in grinding circuit. Standard Pb-Zn differential flotation with one cleaning.

Tennessee-Schuylkill Corp. Fig. 73 (*IC 7077*).

Location: Chloride, Ariz.
Ore: Galena, sphalerite, auriferous pyrite, and small amounts of arsenopyrite and chalcopyrite in quartz and soft altered wall rock (diorite gneiss, granite, quartz-monzonite porphyry, rhyolite, diabase). Relatively soft for crushing and grinding.
Capacity: 150 to 175 tons per 24 hr.
Assays, recoveries, ratios of concentration: See Table 53.
Water: From mine, highly acid; CONSUMPTION, 1.6 tons per ton of ore, net.
Power: Purchased at 44,000 volts; price, 1.6¢ per kw-hr.; motors, 220- and 440-volt; 291.5 total connected hp.
Labor: 15 tons per man-shift operating.
Transportation: Mill at mine. Concentrate trucked 22 mi. to Kingman, Ariz., at contract price of $1.50 per ton (1938), including loading and unloading. Rail freight on lead concentrate from Kingman to El Paso, Tex., $5.50 per ton for $40 concentrate; on zinc concentrate the rate to Amarillo, Tex., is $5.15 for $30 concentrate. Jig concentrate (value $630 per ton) is shipped separately to El Paso at $10 per ton.
Costs (1938): Crushing, $0.154 per ton; grinding and classifying, 0.404; flotation, 0.392; general, including taxes and insurance, 0.955; total, $1.905.

Legend for Fig. 73:

1. 1 @ 50-ton bin; wheel-and-ratchet gate.
2. Bar grizzly, 1 1/2-in. spacing. Scalps off about 40% undersize.
3. 1 @ 10×20 A-C jaw crusher, 3/4-in. set, 20-hp. motor.
4. 1 @ 18-in.×40-ft. (+18°) belt conveyor; 1 @ 14-in. bucket elevator; 1 @ 100-ton bin; 1 @ No. 2 Handy belt feeder.
5. 1 @ 6×4 1/2-ft. Marcy ball mill, manganese-steel liners, life, 60,000 tons new feed, 0.036 lb. per ton; 5 tons @ 3-in. forged-steel balls (2.5 lb. per ton); 27 r.p.m.; 100-hp. motor, herringbone gear; 80% solids; 150% circulating load.
6. 1 @ 12×18-in. Denver mineral jig.
7. Duplex rake classifier; overflow, 30% solids, 80% <80-m.
8. 1 @ 2-in. Wilfley sand pump.
9. 1 @ 8×8-ft. conditioner.
10. 1 @ 8-cell flotation machine.
11. 1 @ 2-cell flotation machine.
12. As (8).
13. As (9).
14. As (10).
15. 1 @ 4-cell flotation machine; *a* = cells 2, 3; *b* = cell 4, *c* = cell 1.
16. 1 @ 1-in. Wilfley sand pump; 1 @ 4-ft. 4-leaf American filter; cake, 10% moisture.
17. 1 @ 2-in. Wilfley sand pump; 1 @ 4-ft. 4-leaf American filter; cake, 10% moisture.
18. 1 @ 30×15-ft. thickener; 1 @ 3-in. Wilfley sand pump to pond. Up to 60% of water reclaimed from thickener and pond.

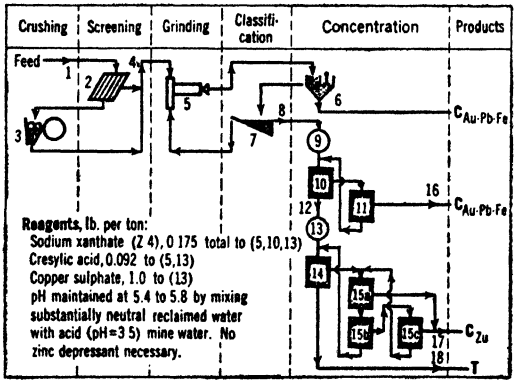

FIG. 73. TENNESSEE-SCHUYLKILL CORP.

Summary. One-stage crushing and one-stage closed-circuit grinding to 65 *mog*, with gravity concentration in the grinding circuit. Lead-zinc differential flotation making an auriferous lead-iron concentrate and a zinc concentrate with some gold value.

Table 53. Assays and recoveries at Tennessee-Schuylkill mill

Material	Assays					Ratio of concentration
	Oz. per ton		Percentages			
	Au	Ag	Pb	Zn	Fe	
Feed	0.185	2.26	3.43	5.15	.....	.....
Jig conc.	14.98	37.70	36.22	4.77	.....	.....
Flotation lead conc.	0.986	13.84	23.22	5.88	25.00	.....
Flotation zinc conc.	0.125	1.87	0.59	51.97	.....	.....
Tailing	0.010	0.16	0.10	0.75	.....	.....
Recoveries						
Jig conc.	16.6	2.9	2.2	.....	.....	488
Flotation lead conc.	74.4	85.6	94.3	.....	.....	7.2
Flotation zinc conc.	4.9	5.9	.....	72.4	.....	13.9
Total	95.9	94.4	96.5	72.4	.....	4.7

St. Joseph Lead Co. Fig. 74 (*IC 6836*).

Location: Atlanta, Idaho.
Capacity: 225 tons per 24 hr.
Ore: Gold- and silver-bearing pyrite and arsenopyrite in quartz veins in altered granite.

Assays:	Au, oz.	Ag., oz.	Insol., %	Pb, %	Cu, %	As, %	Fe, %
Feed	0.467	1.54	.....	.....	.....	.....	.....
Conc.	5.703	61.63	15	0.3	0.3	6.0	38.0
Tailing	0.04	0.085	.....	.....	.....	.....	.....

Recovery: 89.6% Au, 94.58% Ag; 70% of total recovery is by amalgamation.
Ratio of concentration: 55 : 1.

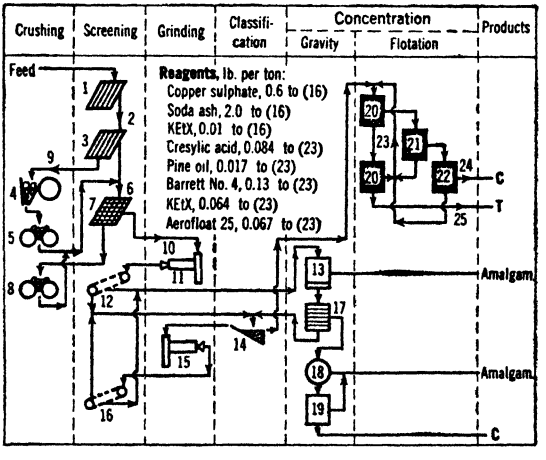

Legend for Fig. 74:

1. Grizzly, 8-in. spaces. Oversize sledged through.

2. 1,066-ton bin with 3×5 1/2-ft. pan feeder.

3. 1 1/4-in. grizzly.

4. 1 @ 14×24-in. Blake crusher, set 1 1/2-in.

5. 1 @ 36×14-in. Joplin-type gear-driven spring rolls.

6. Bucket elevator, 6 1/4×14-in. buckets, 18-in. spacing, 51-ft. centers.

7. 1 @ 4×3-ft. 1,200 r.p.m. St. Joe vibrating screen, 1/2-in. aperture.

8. 1 @ 36×14-in. Joplin-type gear-driven spring rolls.

9. 39-in. 20-kva. Cutler-Hammer suspended magnet.

10. 1 @ 600-ton bin with 4 gates and 4 @ 18-in. belt feeders to 1 @ 18-in. belt, 71 f.p.m., to 1 DECO automatic sampler.

11. 1 @ 4×12-ft. ball mill, 32 r.p.m., 12,000 lb. drop-forged steel balls (4- and 3-in. charged daily in equal weights). 60% solids.

12. 25×31-in. conical trommel, 8-m. aperture. Undersize 3% >20-m.

13. 4 @ 4×7-ft. and 3 @ 4 1/4×9 1/2-ft. amalgamation plates, slope 2 7/16 i.p.f. Amalgam trap 8 in. wide at end of each plate. Minimum pulp temp., 45° F.

14. 1 @ 8×30-ft. rake classifier. Overflow 80% to 200-m.

15. 1 @ 6×6-ft. Marcy ball mill, 27 r.p.m. 10,000 lb. 2 1/2- and 3-in. forged-steel balls. 4-m. chip screen.

16. 1 @ 25-×31-in., conical trommel, 8-m. screen.

17. 3-ft. riffled section in launder.

18. Hand panning.

19. Laboratory amalgamation plate.

20. 1 @ 42-ft. St. Joe rougher cell. Rough conc. from first 14 ft. Feed 27% solids.

21. 5-ft. St. Joe cleaner cell.

22. 2 1/2-ft. St. Joe recleaner cell.

23. 3-in. Wilfley pump.

24. 6-ft. 3-disk filter.

25. 500-ft. launder to 1,000-ft. ditch to 3 settling ponds in series; overflow to clarifying pond, 300 sq. yd. area, overflow slightly "milky."

FIG. 74. ST. JOSEPH LEAD CO., Atlanta mill.

Power: Diesel with auxiliary hydroelectric. CONSUMPTION: Crushing, 41 hp.; grinding, 135; flotation, 37; filtering, 7; misc., 10.

Water: From local stream by gravity. CONSUMPTION, 85 to 100 g.p.m.

Labor: Tons per man-shift 10.94.

Transportation: Trammed from haulage adit to mill bin. Concentrate trucked 85 mi. to rail at Mountain Home, Idaho, during summer, thence to Garfield, Utah. In winter bullion is shipped out by plane 60 mi. to Boise, Idaho; concentrate is stored until summer.

Cost, $ per ton: Crushing, 0.10; grinding, 0.49; amalgamation, 0.08; flotation, 0.26; filtering, 0.07; tailing disposal, 0.06; misc., 0.06; superintendence, 0.04; total, $1.16.

Summary. Crushing by jaw crusher and two stages of rolls, the last in closed circuit with 0.5-in. screen. Grinding in two stages, the first open-circuit, the second closed-circuit, with plate amalgamation in both circuits. All-flotation concentration by a rougher-scavenger flow on the primary run, with two cleanings of rough concentrate and counter-flow of cleaner middlings to the primary rougher.

Alaska Juneau Gold Mining Co. Fig. 75 (*Q* by J. A. Williams, Gen'l Sup't; *IC 6236; 133 J 475*).

Location: Juneau, Alaska.

Ore: Gold, galena, sphalerite, and pyrite in quartz stringers in slate and metagabbro.

Capacity: 13,200 t.p.d. to sorting plant, 50% rejected, balance milled.

Assays: Mine product, $1.16 ($35 gold) per ton; residue milled after coarse sorting, $2.14 per ton; concentrates: table, 8.285 oz. Au, 43.79 oz. Ag, 52.2% Pb; flotation, 10.11 oz. Au, 23.44 oz. Ag, 24.27% Pb.

Recovery: 78.03% based on gold sent to sorting plant; 86.73% on milling heads. Ratio of concentration: 1,024 : 1 on feed milled.

Water: Fresh water by flume, supplemented by 4 @ 10-in. pumps (1,650 connected hp., 13,000 g.p.m. rated capacity) through 20-in. wood-stave line. Salt water used as required, mostly in cold weather. Water CONSUMPTION, approximately 10 tons per ton milled, none re-used.

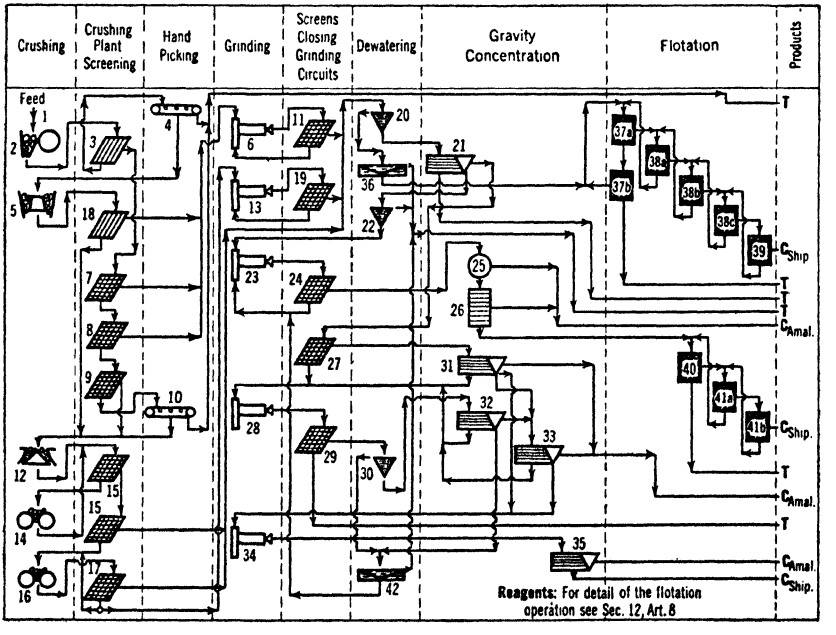

Legend for Fig. 75:

1. Passing 27-in. grizzly. 2 @ 4-car revolving tipples; 1,500-ton (live) tipple hopper; 6 @ 60-in. apron feeders.

2. 3 @ 36×48-in. Buchanan jaw crushers, 8-in. open setting (2 operating, 1 reserve) 166 r.p.m., 150-hp. motors.

3. 3 @ 5-ft. bar grizzlies, 4-in. spacing (2 operating, 1 reserve).

4. 3 @ 42-in. sorting belts (2 operating, 1 reserve), 100 f.p.m., placed over bowl of gyratory (item 5) so that ore pulled off falls directly into gyratory. Heavy spray washes rock as it comes onto belt. 4 men on each belt remove 70 to 80

FIG. 75. ALASKA JUNEAU GOLD MINING CO.

Legend for Fig. 75—Continued:

tons each per man-shift. Selection involves only separation of quartz and part-quartz pieces from dark gangue.

5. 3 @ 9 K gyratory crushers, 2-in. open setting, 150-hp. motor.

6. 12 @ 8×6-ft. ball mills.

7. 3 Niagara screens, 3-in. sq. aperture (2 operating).

8. Stationary washing screen, 3-in. sq. aperture (2 operating).

9. 1 as (7).

10. 2 @ 42-in. sorting belts, 150 f.p.m., 4 sorters each belt pick 20 to 25 tons each per shift.

11. Trunnion trommels on (6), 7-m. aperture.

12. 3 @ 4-ft. standard cones, 1-in. set.

13. 4 @ 6×12-ft. and 2 @ 8×6-ft. ball mills.

14. 1 @ 60×24-in. rolls.

15. 1 @ 2-deck Hum-mer screen.

16. 1 as (14).

17. 1 @ 3×6-ft. Niagara screen.

18. 3 grizzlies, 1 1/2-in. spacing (2 operating, 1 reserve).

19. Trunnion trommels on (13), 7-m. aperture.

20. 11 @ 6-ft. desliming cones.

21. 88 Deister simplex sand tables.

22. 2 @ 6-ft. dewatering cones.

23. 2 @ 6×9-ft. and 2 @ 6×12-ft. ball mills.

24. 8 Hum-mer screens.

25. 4 gold traps.

26. 4 riffled sluices.

27. Trommel.

28. 2 @ 5×5-ft. ball mills.

29. Chip screen.

30. Dewatering cones.

31. 4 Deister tables.

32. 8 Deister tables.

33. 2 Deister tables.

34. Small ball mill.

35. 1 Deister table.

36. 10 @ 19-ft. thickeners.

37. 2 @ 5-cell units of 66-in. Fagergren cells in parallel; *a* = cells 1 and 2, *b* = cells 3 to 5.

38. 1 @ 6-cell 31 1/2×31 1/2-in. Denver Sub-A machine; *a* = cells 4 to 6; *b* = cells 2, 3; *c* = cell 1.

39. 1 @ 16×16-in. M-S standard cell.

40. 1 @ 6-cell Denver Sub-A machine.

41. 1 @ 6-cell Denver Sub-A machine; *a* = cells 4 to 6; *b* = cells 1, 2.

42. 3 thickeners.

Power: Hydroelectric; steam reserve. Transmitted 12 mi. at 22,000 volts. Motors 110- and 2,300-volt 60-cycle. CONSUMPTION, 19.1 hp-hr. per ton milled.

Labor: American, 48.22 tons per man-shift operating.

Running time: 97.5%. Principal causes of loss are blockholing and power failure.

Mill building: Exceptionally steep sloping site. Concrete and steel, concrete floors sloping 1/2 in. per ft. Heated in freezing weather.

Machinery handling: Inclined tram from dock to various mill benches; 20-ton traveling power crane on coarse-crushing bench; 50-ton on fine-crushing bench; monorail crane and crawls on concentrator bench.

Distances: Mine to mill, 2 mi.; electric haulage in trams of 4 @ 10-ton cars. Steamship dock within a few hundred feet of mill. Concentrate shipped 2,000 mi. by boat.

Tailing disposal: Fine tailing lifted about 40 ft. by 5 to 6 out of 7 @ 8-in. Wilfley pumps to a tail-flume open penstock and thence by gravity into bay; coarse waste trammed in side-dump cars, thence by conveyor to scow which is towed by tug into deep water and dumped.

Summary. Five-stage crushing and one coarse-grinding stage from 27-in. r.o.m. to <7-m. table feed. Half of mill feed rejected by hand sorting, and a second large rejection made on deslimed <7-m. primary feed on roughing tables. Rougher-table concentrate reground and reconcentrated in three successive table-cleaning stages. Rougher-table middling reground and floated with rejection of tailing and 2-stage cleaning. Primary fines floated with rougher-scavenger flow on the primary run and four successive cleanings with 1-stage counterflows of cleaner tailings.

This flowsheet is unique in that it is substantially the application of placer-gold treatment to a lode ore of a grade that rivals placer deposits in the meagerness of gold and heavy-mineral content. It is a going project economically only because of the enormous rejections of tailing before the relatively expensive operations of grinding and flotation need be applied to the enriched residues.

A. S. & R. Co., Alice unit. Fig. 76 (*IC 7058*).

Location: Alice, Colo.

Ore: Auriferous copper minerals (secondary sulphides and malachite), silver, chalcopyrite, and pyrite in quartz and siderite. About 80% of value is Au, 20% Ag and Cu.

Capacity: 200 tons per 24 hr.

Assays: Feed, 0.12 oz. Au and 0.70 oz. Ag per ton, 0.4% Cu; concentrate: table, 0.8 oz. Au, 8 oz. Ag, 7% Cu; flotation, 1 oz. Au, 15 oz. Ag, 10% Cu; tailing, 0.015 oz. Au and 0.20 oz. Ag.

Recovery: Au, 82%; Ag, 70%; Cu, 70%.

Ratio of concentration: 22 : 1.

Water piped by gravity 1 mi. from a creek.

Power purchased; comes in at 23,000 volts; motors, 440-volt. Cost, 1.33¢ per kw-hr.

Labor: 22 tons per man-shift, total.

Millsite: Steeply sloping.

Transportation: Mill at mine. Concentrate trucked 12 mi. to Idaho Springs, thence by narrow-gage and standard-gage railroad to Garfield, Utah, at a cost of about $6 per ton, total.

Costs (1936): Labor, $0.38 per ton; supplies, 0.15; power, 0.07; total direct operating, $0.60.

Summary. One-stage crushing and one-stage grinding to 20-m. with amalgamation (making 70% of total recovery) in the grinding circuit. Flotation (rougher-scavenger routing) followed by tabling for the remaining recovery.

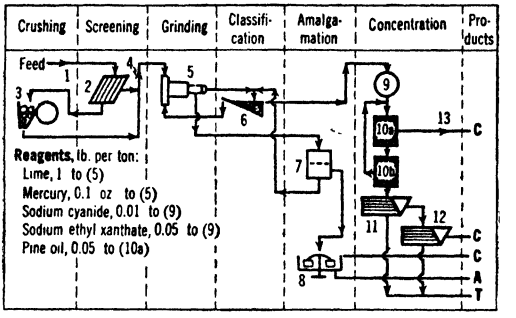

Legend for Fig. 76:

1. 1 @ 70-ton bin with vibrating feeder; 1 @ 30-in.×15-ft. belt conveyor (tramp iron picked by crusherman).

2. Grizzly (3 ft. long), 2 1/2-in. spaces.

3. 1 @ 15×38-in. jaw crusher, 2 1/2-in. set, 305 r.p.m., 60-hp. motor; operated 50 to 67% of time.

4. 1 @ 16-in.×335-ft. belt conveyor, 200 f.p.m., slight fall; 1 @ 150-ton bin with vibrating feeder.

5. 1 @ 6×6-ft. cylindrical ball mill, 25 r.p.m., 12,000 to 14,000 lb. 5-in. forged-steel balls (1 lb. per ton), manganese-steel liners (life about 6 mo.), 125-hp. motor. Clean-up at relining yields about 200 oz. Au. Trunnion trommel, 24×36-in. with 1/8×1/2-in. slots.

6. 1 @ 4×16-ft. duplex drag classifier; overflow, 17% >48-m.

7. Clark-Todd amalgamator; cleaned biweekly, 2 hr. to change pans.

8. 3-ft. arrastre. Clean-up from (7) is charged with 50 to 70 lb. mercury. Impurities hand skimmed. Soft amalgam squeezed in pillow ticking. Mercury loss about 0.05 oz. per ton of ore.

9. 1 @ 5×5-ft. conditioner, 300 r.p.m., 2-hp. motor.

10. 1 @ 6-cell and 1 @ 4-cell flotation machine in parallel; *a* = cell 1, *b* = remainder.

11. 2 Wilfley tables in parallel.

12. 1 half-size Wilfley table; tailing 0.1 oz. Au per ton.

13. 1 @ 4-ft. disk filter; cake, 12% moisture.

FIG. 76. A. S. & R. Co., ALICE mill.

This flowsheet illustrates relatively inexpensive milling of a low-grade ore at a relatively low daily tonnage, effected by amalgamation, concentration at a surprisingly coarse size, and acceptance of low-grade concentrate and fairly high tailing losses.

Mineral Resources, Inc. Fig. 77 (L. E. Blinzler, Gen'l Sup't, *140 # 11 J 51*).

Location: Santa Cruz, Marinduque, P. I.

Ore: Gold with galena, sphalerite, chalcopyrite, and pyrite in crushed andesite, quartz, and calcite. Ore is abnormally sticky.

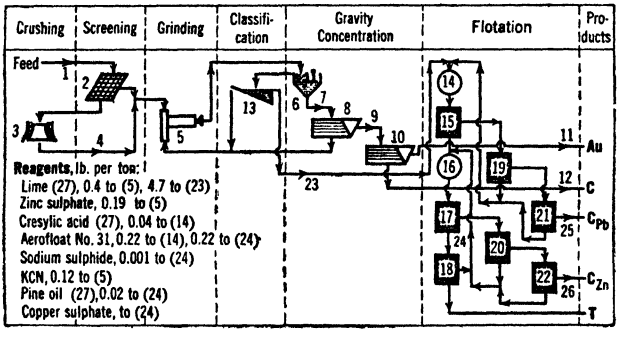

Legend for Fig. 77:

1. Horizontal grizzly of 60-lb. rails, 8-in spacing, over 100-ton bin with 2×2-ft. swing-hammer gate; 1 @ 24×50-in. roller-track apron feeder, 28 r.p.m., 2-hp. gear motor; Dings type-20 bipolar high-intensity magnet mounted on a monorail.

2. 1 @ 3×6-ft. Symons 2-deck mechanical vibrating screen, 2-in. openings, 800 s.p.m., 3-hp. V-belt motor.

3. Traylor TY crusher, 9-in. gape, 1 1/4-in. set.

4. 1 @ 16-in.×64-ft. belt conveyor, +18° incline, 200 f.p.m., 2-hp. motor; 125-ton bin with 16-in.×6-ft. belt feeder, adjustable ratchet-and-pawl drive, 9 f.p.m. aver., 2-hp. gear motor.

5. 1 @ 6×6-ft. Marcy ball mill, 25 r.p.m., 125-hp. motor.

6. 1 single-cell Bendelari jig, 160 r.p.m., 3-hp. motor; bed 1 to 1 1/2-in. comprising Nos. 10 and 13C steel shot with coarse sulphide above.

FIG. 77. MINERAL RESOURCES mill.

Legend for Fig. 77—Continued:

7. Hutch concentrate contains about 25% of gold in feed.

8. 1 @ No. 12 Wilfley table.

9. Pb-Au gold concentrate. Tailing is sphalerite-pyrite middling with little gold.

10. 1 @ No. 13 (laboratory-size) Wilfley table.

11. Barrel amalgamation in 24×36-in. barrel, 12 @ 2-in. balls, 1 lb. NaOH, water to make mass fluid. Grind, wash by overflow, add mercury in an amount dependent on amount of gold present, grind 4 hr. Amalgam collected and retorted.

12. 10-oz. concentrate, sacked for shipment.

13. 1 @ 33-in.×24-ft. duplex rake classifier, 14° slope, 16 s.p.m., 5-hp. motor with speed reducer; 16% solids in overflow, 0.4 on 60-m., 67.5% <200-m.

14. 1 @ 6×6×8-ft. concrete-tank conditioner, with 4-blade 24-in. propeller, 158 r.p.m., 3-hp. motor.

15. 1 @ 12-ft. Southwestern-type flotation cell.

16. As (14).

17. As (15).

18. As (15).

19. 1 @ 4-ft. Southwestern-type flotation cell.

20. As (19).

21. 1 @ 3-ft. Southwestern-type flotation cell.

22. As (21).

23. 1 @ 3-in. Wilfley pump.

24. As (23).

25. 1 @ 12-ft. sq.×8-ft. concrete tank (corners filled) with Dorr Type-A thickener mechanism, 2/5 r.p.m.; 2 leaves of 1 @ 4-leaf 4-ft. American filter.

26. Thickener as (25); 1 leaf of filter (25).

27. When sea water is used, lime must be increased and frother decreased, more or less according to the proportion of sea water in the circuit.

Capacity: 150 tons.

Assays: See Table 54.

Recovery: Au, 90%; Pb, 93%; Zn, 79%.

Ratio of concentration: Pb concentrate, 84 : 1; zinc concentrate, 35 : 1.

Water: Sources are a nearby stream by gravity, the mine by gravity, and sea water lifted 400 ft. in a 10,000-ft. 4-in. line.

Costs (1938): Aver. $1.15 per ton milled.

Table 54. Metallurgical results at Mineral Resources mill (1938)

Material	Assays			
	Au, oz.	Pb, %	Zn, %	Weight, %
Feed.....	0.0630	0.736	2.03	100.0
Lead conc..	2.46	57.25	8.48	1.2
Zinc conc...	0.132	0.605	57.11	2.8
Tailing....	0.0065	0.039	0.260	96.0

Summary. One-stage open-circuit crushing and one-stage closed-circuit grinding from 8-in. to 60-m. Gold is scalped out by a jig in the grinding circuit.

Jig concentrate is twice cleaned on tables and final concentrate amalgamated. Gold-bearing lead and zinc concentrate are made by standard differential methods (Art. 29).

23. SMALL GOLD MILLS

As the term is used here, these are mills with a daily capacity in the range of 25 or less to, say, 75 tons. The flowsheets shown in Fig. 78 are generalized summaries of typical successful installations for the various types of ore listed. Absence of cyanidation in the flowsheets is due to the fact that a cyanide mill requires an investment two to three times that of the mills recommended, and that this differential is not justified for mines in the prospecting and development stages, despite possible higher extractions.

Crushing plant (crushing and screening) comprises a scalping grizzly and a primary crusher and is the same for all of the mills up to 75-ton capacity. Above 75 tons daily such a simple installation may throw an uneconomic burden on the grinding circuit, in which case a secondary crusher is indicated, with or without a scalping screen. At about 150-ton capacity economy in the grinding circuit is likely to require that the secondary-crusher circuit be closed with a screen.

Grinding circuit (grinding plus screening or classification) is one-stage in most mills grinding to normal flotation-feed sizes (48-m. maximum). Hence one grinding mill only is shown in all the flowsheets in Fig. 78. The grinding circuit must be closed in such a way as to insure that an economic percentage of valuable mineral is freed before the pulp escapes from the circuit. Hence a screen is used to close circuit on ores with coarse values and a classifier when the values are medium to fine. This rule is applicable throughout the range of tonnages considered.

Recovery circuits (amalgamation and concentration) are not dependent in flow characteristics on tonnage; this factor determines the size of apparatus only; in small mills where sacrifice of recovery to first cost is justifiable and frequently necessary, the ratio of

[Text continued on p. 127.]

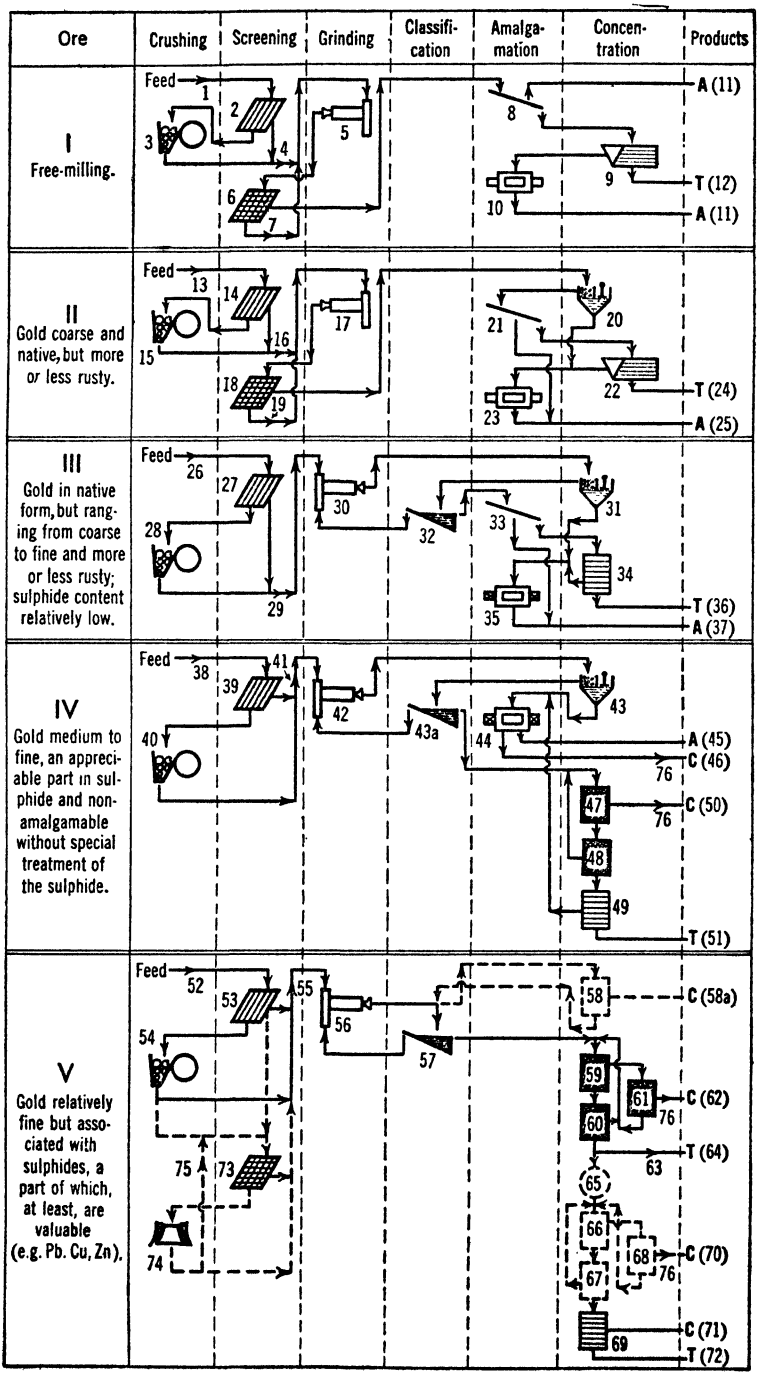

FIG. 78. Generalized flowsheets of small gold mills.

Legend for Fig. 78:

1. Bin or hopper with capacity of several hours' mine run, preferably 24 hr. It should have a grizzly on top to prevent ingress of any lumps larger than can be received by the crusher, and strong enough to withstand sledging. Width of bin gate should be at least three times the aperture of the preceding grizzly, and should operate freely.

2. Bar grizzly forming bottom of chute from bin to crusher, set on a slope such that ore just slides and is, therefore, readily stopped by inserting a shovel, hoe, or the like into the stream. Crusher tender will pick waste here, hence some provision should be made for receiving it and getting it to the waste dump.

3. Crusher with receiving opening large enough to take the great bulk of run-of-mine rock (the balance will be sledged through the bin-top grizzly). This crusher should break to as small a size as is possible at one pass. Maximum reduction ratio is possible in gyratory-type crushers, but capacities and prices are too high for the relatively large receiving openings necessary to take ordinary run-of-mine rock without excessive sledging. A single-toggle type jaw crusher with curved crushing faces and a deep crushing zone will generally serve best in this service.

4. Storage bin with at least 24-hr. capacity. The crusher will normally have enough capacity to break a 24-hr. supply for the mill in a few hours, and provision for change in flow rate should be made here. A laminated bin (see Sec. 18, Art. 3) will probably be cheapest. Some elevation of ore must normally be provided one side or the other of this bin; usually the provision is made on the feed side; a belt conveyor gives less operating trouble than a bucket elevator, but is likely to be more expensive to instal. A belt-type feeder with variable-speed drive is best for discharge of this bin, considering both price and the desirability for control of ball-mill feed rate. Provision should be made on this discharge line for cutting a mill-feed sample.

5. Ball mill. This mill should have the largest standard diameter-length ratio corresponding to the tonnage-size performance demands. If *all* of the gold is coarse, it may be of grate type; normally, however, with the circuit closed by a relatively coarse mesh screen (6), it should be of overflow type so that the mill itself may do a certain amount of selective grinding of the high-gravity gold-bearing particles. Mercury will normally be added to the ball-mill feed box.

6. Screen. This will normally be a trommel bolted to the ball-mill discharge trunnion, but it may be a small trommel or vibrating screen. Either of the latter will probably entail an elevating device for undersize unless the millsite is exceptionally steep. Aperture of this screen should be as small as possible (not more than 1/8-in.); it should not be less than 14-m. unless of the vibrating type, when it may be as small as 48-m.

7. Oversize may be shoveled back to the ball-mill feed box, or some kind of mechanical elevating device (spiral or flight conveyor, bucket elevator, sand wheel, or the like) used. If elevation is required in the undersize line, it may be best to elevate all of the mill discharge to a screen set high enough to return oversize to the mill by gravity. Some trunnion trommels are made with an internal spiral serving to push oversize back through the discharge trunnion, but this practice decreases screen efficiency and returns the oversize to the discharge end of the mill.

8. Amalgamating plate (see Sec. 14, Art. 6). An amalgam trap preceding or following this plate will improve recovery and decrease mercury loss. A blanket table may be substituted for the plate, in which case an amalgam trap is a virtual necessity, if mercury is added to the ball mill.

9. A shaking table (or other gravity concentrator) is placed here both as a safeguard against loss of amalgam and rusty gold and as an indicator of tailing grade.

10. Some form of grinding amalgamator. Usually this will be a revolving barrel with a light load of balls, but it may be of the arrastre or pan type; in either case it will be operated intermittently. There will be a marked hang-back of gold and amalgam in the ball-mill and in any dead pockets in the pulp lines from (5) through to (9). Peculation from such pockets, from the surface of (8), and of concentrate from (9) must be guarded against.

11. Squeezed and retorted, yielding mercury and gold sponge, which is melted (see Sec. 14, Art. 9).

12 This tailing should be sampled and, unless of exceptionally low grade, should be impounded with a view to facilitating further treatment in the future.

13–19. As (1 to 7 respectively) except that mercury is not usually fed to the ball mill.

20. Gravity concentrator to recover coarse nonamalgamable gold. This apparatus may be a riffled sluice, a jig, a shaking table, or a strake. The jig and table have the advantage of continuous operation; the sluice and strake are lower priced and will, in general, save finer gold, but require more attention. The jig causes the least dilution of the pulp returning to the classifier.

21. As (8). The ball mill will ordinarily brighten a certain amount of gold, which may amalgamate here. If, however, the amount so brightened is small, a riffle followed by a strake or strakes alone would be substituted for (20, 21, 22).

22. As (9), but see (21).

23. As (10). With rusty gold some reagent that will dissolve the gold coating is added here.

24. See (12).

25. See (11).

26–29. As (1 to 4 respectively).

30. Ball mill of large diameter-length ratio; it may be of either grate or overflow type. Mercury will normally not be added to the mill feed. See also (5).

31. As (20).

32. A mechanical classifier of the drag, rake, or spiral type; the first is cheapest and least efficient, the spiral is cheaper than the rake; unless extremely fine grinding is necessary the desired re-elevation of sands can probably be attained by any one of the three.

33. As (21) substituting (31, 33, 34) for (20, 21, 22 respectively) in the note.

34. Strake to catch nonamalgamable gold too fine to be caught in (31) under the operating conditions there prevailing.

Legend for Fig. 78—Continued:

35. As (23).
36. As (12).
37. As (11).
38–41. As (1 to 4 respectively).
42. As (30).
43. As (20).
43a. As (32).
44. As (23).
45. As (11).
46. Combine with (50).

47. A subaeration-type flotation machine (Sec. 12, Art. 23) will probably give the best service here, since it possesses maximum operating flexibility and consequent adaptability to the changing conditions inherent in small mill operations. The size of cell and number of cells should be such as to give the necessary time-factor as determined by flotation tests (Sec. 19, Art. 22).

48. This will normally be the later cells of the same machine of which 47 comprises the first cells. The rougher-scavenger flow shown will produce a maximum recovery on a given feed (provided the combined volume of (47) and (48) comprises sufficient volume for the required flotation time) with sufficient enrichment of concentrate from an ore with low sulphide content. If the ore is high in sulphide a much more elaborate flowsheet is necessary (see NORANDA, Fig. 37; MT. LYELL, Fig. 33; OUTOKUMPU, Fig. 34).

49. Strake, to recover gold too fine to be caught in (43) under the conditions prevailing therein and too coarse to be floated. If this concentrate is of such low grade that amalgamation tailing lowers (46) too much, it should be amalgamated separately and the amalgamation tailing sent back to (43*a*). If amalgamation is not practiced (concentrate from (43) not economically amalgamable), return concentrate from (49) to (43*a*) or (42), and mix concentrate from (43) with (50) or treat or ship separately according to treatment methods applicable and the economics thereof.

50. Disposal depends upon character of sulphide. Pyrite may be cyanided (custom mill) or smelted. Copper-bearing concentrate should be smelted. Lead-iron concentrate will probably make a maximum yield on smelting, but can be cyanided. Arsenical concentrate may be roasted and the calcine cyanided, or it may be smelted. Choice of method where a choice exists is solely a matter of economics.

51. As (12).
52–55. As (1 to 4 respectively).
56. As (30).
57. As (32).

58. If sulphides free relatively coarse, or if there is some gold present too coarse to float, means should be inserted here to take such material out of the pulp stream. In the absence of coarse gold, this should be a flotation machine (see *Unit cell*, Sec. 12, Art. 23); if coarse gold is to be removed, choose from the apparatus of (20); if both gold and sulphide are available here, both a gravity concentrator and a flotation machine may be desirable, in the order named.

58*a*. This concentrate will normally be barrel-amalgamated, if the gold content is substantially amenable (see 44, 45, 46). If the ore is lead-bearing, amalgamation tailing will normally join (62); if copper-bearing or arsenical, the probability is that it will be nonamalgamable, in which case see (50).

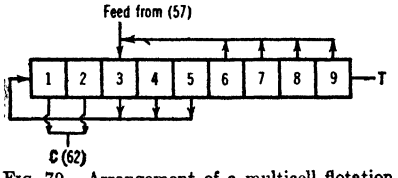

FIG. 79. Arrangement of a multicell flotation machine for rougher-scavenger flow on the primary run, and one cleaning of rough concentrate, with cleaner tailing counterflowed one stage.

59–61. A subaeration-type flotation machine is recommended here for the reason given in (47). One multicell unit will serve for the three stages, with flow arranged after the fashion shown in Fig. 79, in which cells 3 to 5 comprise (59), 6 to 9 are (60), and cells 1, 2 are (61) of Fig. 78. The total number of cells to be used and their size and grouping must be such as to satisfy time requirements (see note 47).

62. See (50).

63. If there is only one valuable sulphide, (69) should be inserted here.

64. As (12).

65–68. These items are to be used when two valuable sulphides are present, *e.g.*, Pb and Zn.

65. A conditioning tank, comprising normally a circular tank with an agitator of sufficient size and power to keep a full charge of pulp in a state of reasonably uniform suspension. The volume of the tank must be great enough to allow time therein for whatever conditioning reaction is necessary (see Sec. 12, Art. 36).

66–68. As (59 to 61).

69. As (49).

70. If zinc concentrate, ship to smelter. In the rare instances where some other kind of concentrate is taken here, disposal is a special problem.

71. Apply the principle of (49).

72. As (12).

73–75. The apparatus and flow lines dotted in here apply when grinding requirements make a finer feed to the grinding unit economically imperative. Normally this condition arises when daily tonnage exceeds 150; it may arise at a lower figure.

73. A vibrating screen of mechanical type is recommended. Screen aperture is that necessary to give ball-mill feed of the desired size, usually 3/8- to 1/2-in. maximum.

74. A secondary crusher of the high-speed gyratory type (see Sec. 4, Arts. 6 and 7). Size depends upon the duty demanded.

75. Whether or not the secondary-crusher circuit is closed on screen (73) depends upon the rigor of the requirement as to ball-mill feed size; if a small amount of oversize in this feed can be tolerated, (74) is run open-circuit, otherwise an elevating device (see discussion in note 4) must be provided and the circuit closed. Such closure increases the tonnage fed to (73) and (74) (see Sec. 19, Art. 24), and this fact must be allowed for.

76. In small mills fine concentrate is usually run directly to a filter, or better to a surge tank or sump from which it can be drawn to the filter as desired; larger mills place a thickener ahead of the filter. A disk-type vacuum filter is recommended for small mill service.

daily tonnage to machine unit size is normally much larger than in the large mill. For mills of 100-ton capacity upward, with any reasonable assurance of continued ore supply, the possibilities of cyanidation should be investigated.

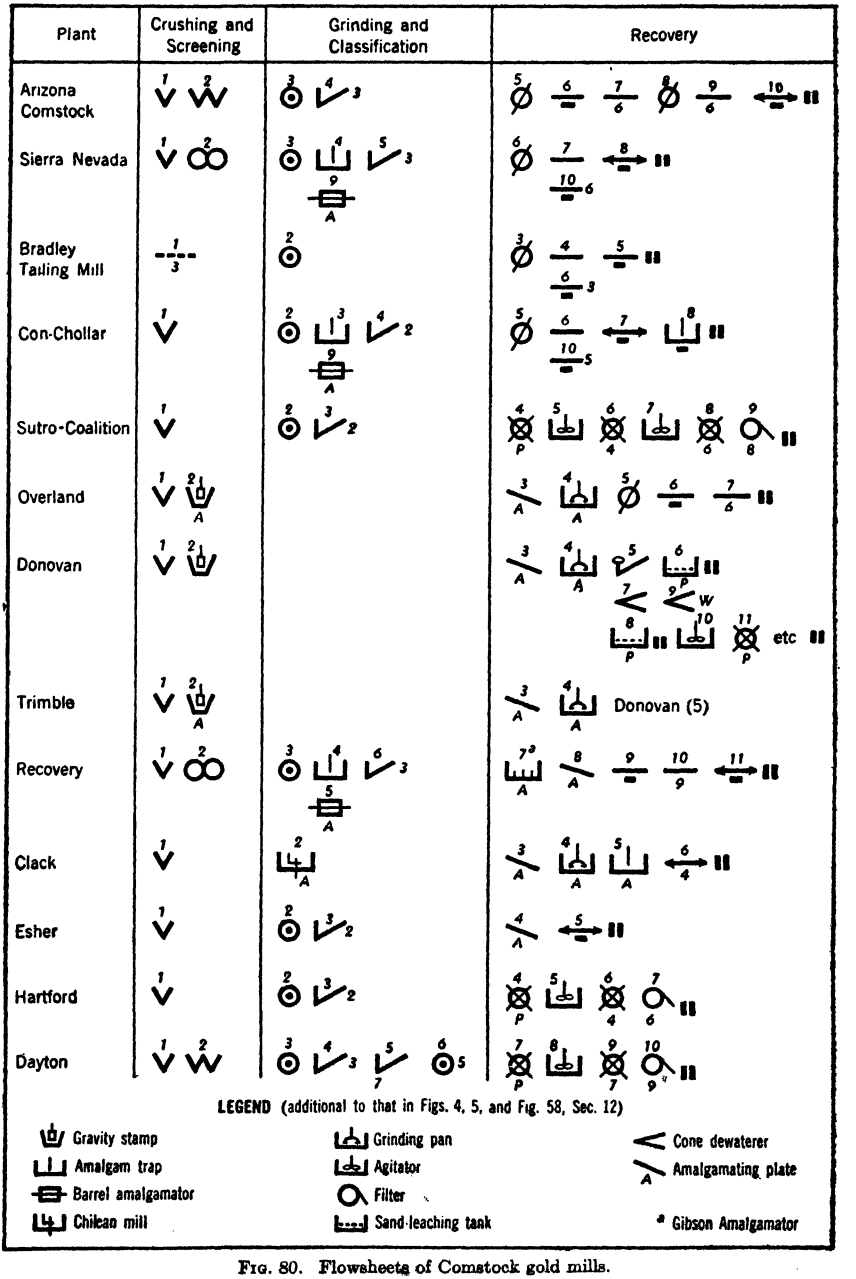

FIG. 80. Flowsheets of Comstock gold mills.

Costs (1937) of all-new equipment for Type I mills of 5- and of 50-ton daily capacity was $300 and $120 per ton of daily capacity respectively, with intermediate prices varying

linearly according to tonnage; corresponding figures for Type II mills were $440 and $145, Type III, $500 and $170; Type IV, $700 and $230; and Type V, without items 63 to 68 and 73 to 75, $750 to $250. Ziegler (*23 #10 MCJ 38*) sets the costs of small (<200 t.p.d.) single-product flotation plants, excluding power and extensive water supply, at $300 to $600 per daily ton, the higher figure for low tonnages; for two-product flotation, add 30%; cyanidation may reach $1,000 per daily ton, if all-sliming and vacuum precipitation are provided for. For installation and housing costs, and for mills in the upper part of the range discussed, see Sec. 20.

Water requirements for mills of Types I, II, and III are about 4 to 5 tons per ton of mill feed and for Types IV and V from 3 to 4 tons, without reclamation.

Power installation required will range from 1 to 2 hp. per ton for Types I and II up to 3 hp. maximum (corresponding to a small-tonnage mill) for Type V.

Fig. 80 gives skeleton flowsheets of 12 mills treating low-grade (0.08- to 0.15-oz.) gold ores near Virginia City, Nev., discussed by Gardner and Carpenter (*San Francisco Meeting AIME, Oct., 1935*). The mills are straight amalgamation; amalgamation plus flotation; gravity concentration and flotation, shipping concentrate; and straight cyanidation. All but Arizona Comstock (330 t.p.d.) treat 100 tons per day or less. The amalgamation and the concentration plants make 60 to 75% recoveries; cyanidation makes upward of 90%. Costs range from $1 to $2 per ton milled. Variations in flowsheet are said to be justified by the various operators on the score that ores differ or that the other fellow is wrong.

Clean-up of old gold mills is an unfailing source of considerable recovery. The principal locations of gold are (*38 JCM 441*): made ground, rubbish dumps, smelting-ash dumps; sumps, drains and floors in the mill; wooden tables, launders, etc., in the mill; scale throughout the plant, particularly in pipes and classifiers; amalgam plates, chips from the grinding plant, extractor boxes, vats and sumps in the cyanide plant; and all dust, brick, and wood from the refinery house. Treatment is to burn all organic matter, then crush, and concentrate by gravity, finishing over a strake.

24. SILVER

Uses. The principal use is as a component of an alloy for coins, jewelry, and tableware. The chief alloys are those with aluminum, copper, zinc, nickel, and combinations of the same. Salts of silver are used to some extent in medicine and to a great extent in photography.

Ores. The economic minerals are metallic silver, argentite, argentiferous galena, cerargyrite, proustite, pyrargyrite, stephanite, tetrahedrite, polybasite. The most important ores are the silver-bearing lead ores in which the heavy mineral is principally argentiferous galena, usually associated with pyrite, sphalerite and rich silver-bearing minerals. The usual gangue minerals are quartz, calcite, barite, and chert. The copper ores of Col-

Table 55. World production of silver (thousands of ounces, troy) (*MI*)

	1913	1918	1919	1921	1929	1932	1936	1937	1938 *a*
United States *b*	66,802	67,810	56,682	53,052	61,335	23,981	63,812	71,942	62,665
Canada	31,846	21,285	16,020	13,135	23,143	18,356	18,334	22,683	22,266
Mexico	49,461	62,517	65,904	65,514	108,871	69,303	77,464	84,681	84,443
Newfoundland							1,249	1,448	1,292
Central America		2,900	2,800	2,000	3,000	4,300	3,600	3,600	4,550
South America		15,561	14,750	15,065	26,844	11,191	32,840	29,057	32,400
Total America		170,073	156,157	147,766	223,193	127,131	197,300	213,410	206,616
British India *c*		2,240	2,166	3,828	7,298	6,027	5,977	6,205	5,947
Japan and Chosen	4,787	6,626	4,975	3,995	5,735	6,570	11,657	12,439	12,300
East Indies		400	1,007	1,022	1,968	842	663	500	300
China and others		98	92	55	286	280	591	676	600
Total Asia		9,365	8,240	8,900	15,287	13,720	18,888	19,819	19,147
Transvaal		878	891	830	1,032	1,121	1,076	1,101	1,131
Rhodesia		176	181	160	100	115	374	236	225
Belgian Congo		}				{ 1,865	2,780	3,215	3,295
Other Africa		} 32	200	171	180	{ 340	350	301	350
Total Africa		1,086	1,272	1,161	1,313	3,340	4,580	4,853	5,001
Europe		6,872	3,600	7,991	11,251	13,144	19,704	20,811	19,600
Australia and New Zealand	18,855	10,000	7,188	9,446	9,926	9,493	13,194	14,903	14,925
World	214,391	197,395	176,457	175,264	260,970	166,928	253,666	273,797	264,289

a Preliminary estimate. *b* Includes Philippines. *c* Includes Burma.

orado, Utah, Montana, and Arizona produce considerable silver. Silver is also usually associated with gold in both quartz-vein and placer types of deposit. Native silver and sulphides in quartz associated with a complex mixture of sulphides, arsenides, antimonides, etc., were important at Cobalt, Ont.

Production. World production is a fairly constant quantity, ranging, since 1893, between 161,000,000 and 274,000,000 troy ounces. Distribution of production is shown in Table 55.

Selling. See Art. 50. Price of silver is a political football; past prices are no guide to the future.

Sunshine Mining Co. Fig. 81 (*Q* by W. Church Holmes, Mill Sup't and Metallurgist).

Location: Kellogg, Idaho.

Ore: Argentiferous tetrahedrite with pyrite and small amounts of galena, stibnite, and arsenopyrite in siderite and quartz.

Capacity: Ranges from 750 to 1,200 tons per 24 hr.

Assays: Feed, oz. Ag per ton: 48.2 (1937), 36.2 (1938); concentrate: maintained as near 1,000 oz. per ton as possible by variable rejection of a finely intergrown pyrite middling; averages for 1937 and 1938 follow:

	Au, oz.	Ag, oz.	Cu, %	Pb, %	As, %	Sb, %	S, %	Fe, %	Insol., %
1937	0.03	1010.0	12.57	4.99	1.65	10.22	34.4	24.7	3.4
1938	0.032	983.8	12.30	3.06	2.03	9.89	35.4	26.0	3.5

Tailing: ranges according to pyrite rejection as above from 0.7 to 0.95 oz. Ag per ton; average for 1937 was 0.86 oz.; for 1938, 0.94 oz.; for first quarter 1939, 0.77 oz.

Recovery: 98.3% Ag (1937); 97.5% (1938).

Ratio of concentration: 21.3 : 1 (1937); 27.9 : 1 (1938).

Water: Comes by gravity through 14-in. wood-stave pipe 1 mi. from dam; CONSUMPTION 2.75 tons per ton milled, none reclaimed.

Power: Purchased at 2,300 volts; motors, 2,300- and 440-volt; CONSUMPTION, 19.4 hp-hr. per ton milled.

Labor: American. 85 tons per man-shift, operating; 350 tons per man-shift, repairs.

Legend for Fig. 81:

1. 1 @ 650-ton bin; Link-Belt apron feeder; 1 @ 30-in. belt conveyor with magnetic head pulley.

2. Cantilever grizzly.

3. 1 @ 3-ft. Traylor TZ reduction gyratory.

4. 1 @ 24-in. belt conveyor; 1 surge bin.

5. 2 @ 4×12-ft. A-C vibrating screens.

6. 1 @ 24-in. belt conveyor.

7. 1 @ 4-ft. cone crusher.

8. 1 @ 24-in. belt conveyor; 1 Link-Belt tripper; 1 @ 1,500-ton bin; reciprocating feeders; 24-in. belt conveyor; Merrick weightometer; 2 @ 250-ton surge bins.

9. 1 @ 9×7-ft. Williamson ball mill (Unit 1) and 2 @ 8-ft.×48-in. Hardinge-type ball mills (Unit 2).

10. 1 @ 48-in. and 2 @ 36-in. Akins duplex classifiers.

11. 2 @ 4-in. Hydroseal pumps; 1 @ 2-way distributor.

12. 2 @ 24-in. Denver Sub-A unit cells.

13. 2 @ 20-cell 24-in. Denver Sub-A flotation machines; *a* = cell 2, *b* = cells 3 to 5, *c* = cells 6 to 8, *d* = cells 9 to 12, *e* = cells 13 to 20, *f* = cell 1. 295 and 300 r.p.m.; rubber-covered impeller and hood last 4 yr. Feed, 28% solids, *p*H 7.8; time-factor, 20 min.

14. Combined concentrate filtered, sent to 80-ton bin, and transported by truck and railroad to smelter.

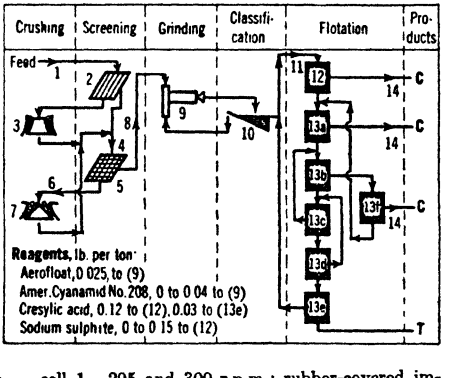

FIG. 81. SUNSHINE MINING CO.

Mill building: Sloping site. Steel and wood frame, galvanized-iron enclosure. Concrete for base floors and 2×4-in. slats on edge and spaced for intermediate floors; slope concrete in wet part, 1/4 in. per ft. Heated. 15-ton hand-operated traveling crane in coarse-crushing section; single-track traveling power hoist in grinding section.

Transportation: Mill at mine. Concentrate shipped 2 mi. by truck to railroad and thence 6 mi. to smelter; 8.3% moisture.

Tailing disposal: 2 mi. by gravity through 12-in. wood-stave pipe to river; in conjunction with other operators in district a suction dredge is maintained about 20 mi. down river, which removes and impounds joint tailing.

Veta Mines, Inc., Ash Peak mine. Fig. 82 (*IC 7119; Tref 1/41*).

Location: Duncan, Ariz.

Ore: Argentite associated with pyrite, calcite, and rhodochrosite in quartz and silicified andesite.

Capacity: 190 tons per 24 hr.

Assays: Feed, 11 oz. Ag and 0.025 oz. Au pe ton; concentrate, 550 oz. Ag and 1.5 oz. Au with about 1% combined Pb, Cu, Zn, and 6% Fe.

Recovery: Ag, 65%.

Ratio of concentration: 110 : 1.

Water from a well pumped 7,000 ft. through a lift of 1,400 ft. CONSUMPTION, 5.7 tons new water per ton of ore; cost, $0.09 per ton milled.

Power: Company-generated by Diesel engines; motors, 2,300-volt (crusher and ball-mill), 440-volt for all others down to 1-hp.

Labor: 24 tons per man-shift, operating.

Millsite steeply sloping; building is wood-frame with corrugated-iron cover.

Transportation: Mine at mill. Concentrate (18% moisture) is trucked in 225-lb. sacks 215 mi. to El Paso at a cost of $6 per ton.

Costs: Crushing, $0.17 per ton; milling, 0.81; concentrate handling, 0.09; total operating, $1.07.

Legend for Fig. 82:

1. R.o.m. <10-in. grizzly to 65-ton storage.

2. Grizzly, 2-in. spacing.

3. 1 @ 12×16-in. Buchanan jaw crusher, 2-in. open setting, 25-hp. motor. Manganese-steel jaw plates must be changed weekly; they are built up by hard-facing.

4. 1 @ 18-in.×40-ft. belt conveyor, +20°, 150 f.p.m., with magnetic head pulley.

5. 1 @ 30×48-in. vibrating screen, 1/4-in. aperture, 2-hp. motor.

6. 1 @ 3-ft. short-head cone crusher, 3/4-in. set, 60-hp. motor.

7. 1 @ 16-in.×20-ft. belt conveyor; 1 @ 16-in.× 175-ft. conveyor, +17°; 1 @ 16-in.×20-ft. distributing conveyor; 2 @ 200-ton bins; 1 @ 20-in.×35-ft. flat feeder belt.

8. 1 @ 6×10-ft. overflow-type ball mill, manganese-steel liners (0.7 lb. per ton), 30,000 lb. @ 3-in. forged-steel balls (4.2 lb. per ton; consumption of cast-iron balls was about twice this), 24 r.p.m., 200-hp. motor, 72% solids.

9. 1 @ 6×24-ft. duplex rake classifier. Circulating load about 800%. Overflow 4% >100-m., 68% <200-m., 18 to 19% solids. Chips from screen on classifier overflow yield ash carrying 80 oz. Ag and 0.5 oz. Au per ton of ash.

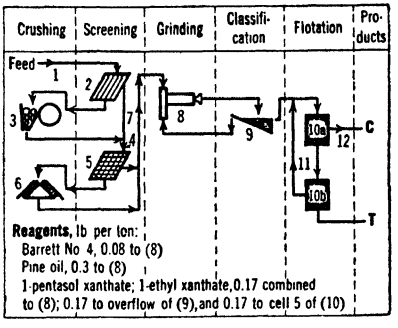

10. 1 @ 10-cell 21-in. M-S type subaeration cell; *a* = cells 1 to 3, *b* = remaining cells.

11. 1 @ 1-in. Wilfley pump.

12. 1 @ 12×8-ft. thickener, copper sulphate, 0.03 lb. per ton of original feed, added as a settling agent, overflow contains 2 to 3% solids, underflow 50% solids. 1 @ 4×2-ft. drum filter; bin; sacks; truck; smelter. Thickener overflow goes to 2 settling tanks in series; settlings are removed and sacked at intervals.

FIG. 82. VETA MINES

Summary. Two-stage crushing and one-stage grinding to 65 *mog.* Flotation concentration by simple rougher-scavenger routing. Higher flotation recoveries could be made by finer grinding and up to 80% recovery by cyanidation of crude ore or tailing, but not profitably.

25. CUSTOM MILLS

These are mills adapted to the treatment of a variety of ores which have in common only, usually, the fact that they contain enough precious metal to pay for ore haulage, sampling, and milling at rates sufficiently higher than those prevailing at well run owner-operated plants to pay the middlemen profits. They are often run in connection with smelters (*e.g.*, MIDVALE, Fig. 124; TOOELE, Fig. 127), but may serve and be placed in or near a mining district of considerable area and production tonnage removed from a smelter (GOLDEN CYCLE, Fig. 83; EAGLE-PICHER CENTRAL, Fig. 117) or may simply be a small mill in a small district (RECOVERY, Fig. 80). For usual settlement methods see Art. 50. The essential elements of a good custom mill are: (*a*) an accurate sampling plant sufficiently open to permit clear observation of the flow, and with suitable provision to prevent dust loss; (*b*) adequate storage facilities for segregation of small lots at reasonable expense; (*c*) adequate provision for mixing lots to a composition not too far from some standard; (*d*) a flexible pulp-transport system to permit ready variation of treatment according to the ore; (*e*) a variety of efficient treatment schemes.

Golden Cycle Corp. Fig. 83 (*136 J 881; IC 6739*).

Location: Colorado Springs, Colo.

Ore: Sulphotelluride gold ores with small amounts of silver and negligible amounts of base metals; copper ores; and complex lead-zinc ores, mostly gold bearing. Assay of feed averages 0.30 to 0.37 oz. Au per ton.

Capacity: 1,500 t.p.d.

Recovery: Tailing <0.5% Pb; <0.1% Cu; 0.02 oz. Au, $0.024 soluble. Aim is to keep as much gold as possible in the plant and ship as much lead, copper, and silver as possible to the smelter. Total recovery of gold about 95%.

Cost (1935): $1.50 per ton, operating only, of which sampling is a considerable part. Cost of cyaniding flotation tailing estimated at 15 to 20¢ per ton.

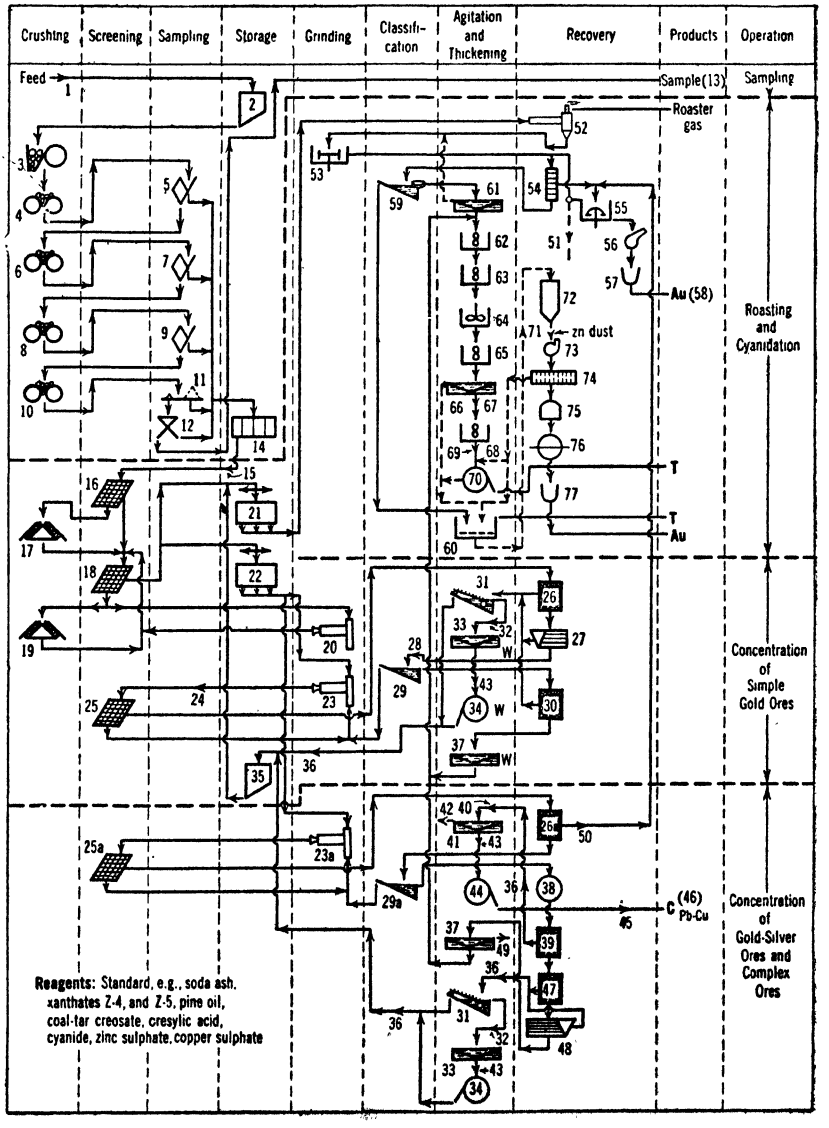

FIG. 83. GOLDEN CYCLE CORP.

Legend for Fig. 83:

1. By rail or truck.
2. Unloading bins.
3. 1 @ 13×24-in. Blake-type jaw crusher.
4. 1 @ 40×14-in. rolls.
5. Vezin sampler, 25% cut.
6. 1 @ 30×14-in. rolls.
7. Vezin sampler, 20% cut.
8. 1 @ 30×14-in. rolls.
9. Vezin sampler, 20% cut.
10. 1 @ 20×12-in. rolls.
11. Shoveling floor, steel plate.
12. Riffles.
13. To assay office. See Sec. 19, Art. 7.
14. Compartmented hot-storage bins.
15. Belt conveyor with Dings magnetic head pulley.
16. Stationary screen, 5/8-in. sq. openings.
17. 1 @ 5 1/2-ft. short-head cone crusher, set 1/8- to 3/16-in.
18. 4 Hum-mer screens, 4-m. aperture.
19. 1 as (13), for concentrating ores.
20. 2 @ 6×6-ft. Schmidt Kominuters in parallel, for roaster ores.
21. Roaster-ore storage and mixing bins.
22. Concentrating-ore storage and mixing bins.
23. 3 @ 6×6-ft. grate-type ball mills, 23 and 24 r.p.m., low ball load, 2 1/2- and 3-in. cast balls, 1.7 lb. per ton. Feed to 3 mills, 444 t.p.d.
23*a*. When used for complex ore, grind is finer and feed rate 400 t.p.d.
24. Elevator.
25. 3 @ 4×4-ft. trommels, 6-m. cloth.
25*a*. Not used with gold-silver noncomplex ores; ball-mill discharge goes direct to classifier (29*a*).
26. 2 @ No. 500 Denver unit cells.
26*a*. By-passed with noncomplex gold-silver ores; see (25*a*).
27. 5 Wilfley tables.
28. Elevator.
29. 1 @ 6×23 1/3-ft. duplex rake classifier, 2 1/2-in. slope, 22 s.p.m.; overflow 1.2% >35-m., 43.6% <200-m.
29*a*. Same classifier as (29) but 17 r.p.m.; overflow 1.9% >65-m., 63.5% <200-m.
30. 2 @ No. 18 Spl. Denver Sub-A machines in parallel.
31. 1 @ 2×28-ft. Stearns-Rogers drag dewaterer.
32. Agitator alternative.
33. 1 @ 17×6-ft. thickener.
34. 1 @ 6-ft. 5-disk American filter.
35. Storage bin for pyrite-gold concentrator.
36. Barren cyanide solution used to wash concentrate down launders; contains enough lime and cyanide to effect partial solution of gold and silver.
37. 1 @ 50×7-ft. thickener. A minimum of lime to give clear overflow added here; quantity must be kept down, or trouble follows in flotation. Excess is counteracted by soda ash in flotation, but excess of soda ash causes dispersion in (37) and requires more lime; care is necessary to maintain balance. Maximum of 0.05 CaO is sought, and *p*H is held to 7.2 to 7.6 in lead-copper flotation.
38. 2 @ 10×8-ft. Denver conditioners in parallel.
39. 2 @ No. 18 Spl. Denver Sub-A machines in parallel. Operated to make as small a concentrate as is consistent with flotation of all Pb and Cu and as much Ag as possible.
40. 2-in. Wilfley pump.
41. 1 @ 16×6-ft. thickener.
42. Solution to cyanide plant.
43. 1-in. Wilfley pump.
44. 1 @ 6-ft. 6-disk American filter.
45. Storage-drying bins with steam coils in bottom.
46. Shipped to smelter at Leadville. May be a straight copper concentrate with some ores.
47. 1 @ 4-cell 24-in. Denver Sub-A flotation machine.
48. 6 Wilfley tables.
49. Contains gold from cyanide added to (38) to depress Fe and Zn (see Sec. 12, Art. 10). Kept in the flotation circuit until several days after addition of cyanide to circuit has ceased (operation on flow for simple gold ores), when gold content will have dropped sufficiently to permit discharge to the main mill-water circuit.
50. Both overflow and cone concentrates.
51. To (29*a*) when feed is from (26*a*).
52. 8 @ 13×115-ft. Edwards duplex roasting furnaces each with 1 @ 13×44-ft. cooling hearth; slope, 1 in. per ft.; 74 rabbles, 54 in roaster, 3 r.p.m. in roaster, 6 in cooler, 16 hp. consumed each unit, 5 to 6 hr. time-factor, 170 to 180 lb. lignite per ton. Cooled to 85° C.
53. 6 @ 6-ft. Chilean mills.
54. 6 @ 6×12-ft. strakes with light-weight Canton-flannel cover, changed every 12 hr. and washed by sprays and in a barrel washing machine. Recovery is 22 to 40% of total recovered gold.
55. Wheeler grinding pans; mercury added as well as regular mill cyanide solution.
56. Retort.
57. Melting crucible.
58. 920 to 940 fine; 45 to 55 fine in Ag.
59. 15(diam.)-ft. bowl-rake classifier. Overflow, 7% solids.
60. 10 @ 50(diam.)×10 3/4-ft. vats, 900-ton (dry-sand) capacity ea. Water at 120-lb pressure used for flushing.
61. 1 @ 50-ft. tray thickener; spigot product 43% solids; 4 to 5% >100-m., 84% <200-m. Overflow circulated until cool in order to cause sulphates to be dropped before reaching press (74).
62. 1 @ 41×26-ft. Dorr agitator.
63. 1 @ 37×24 3/4- and 1 @ 35 2/3×17-ft. Dorr agitator in parallel.
64. 1 @ 30 1/2×14-ft. mechanical agitator.
65. 1 @ 30 1/2×14-ft. Dorr agitator.
66. 3 @ 30 5/6×10 1/4-ft. tray thickeners in parallel; spigots to 1 @ 30 5/6×10 1/4-ft. Hardinge Superthickener.
67. 1 @ 3-in. centrifugal pump.
68. 1 @ 37×24 3/4-ft. Dorr agitator. Total time of agitation, (58) through (64), is 65 to 75 hr.
69. 2 @ 30 2/3×10 1/4-ft. mechanically agitated surge tanks (filled alternately).
70. 2 Butters filters, 121 @ 6 1/2×9 1/2-ft canvas-covered frames.
71. 1 @ 30×9-ft. solution-storage tank.
72. Crowe vacuum system.
73. Centrifugal pump.
74. 6 Merrill precipitation presses.
75. Coal-fired muffle.
76. Rockwell furnace.
77. Graphite crucible.

Summary. Concentration to prepare suitable feed for roasting and cyanidation. Concentration reduces the tonnage of roaster feed (*e.g.*, only 3 to 5% of the low-grade telluride ore goes through the roaster), removes the cyanicides from complex ores, and removes coarse gold. Concentration also removes soluble salts by washing and precipitation with lime. High flexibility is gained by multiple branching of pulp lines.

See also Sec. 19, Art. 6.

26. INDIUM

Uses. Dental amalgams and alloys. Low-melting alloys; Wood's metal plus 18% In is fluid at 46.5° C. Alloyed with or plated on silver to prevent tarnish. Polished In has high reflecting power. In a glass containing sulphur compounds, 0.05% In_2O_3 imparts a fine yellow color, darker with larger proportions. Indium (0.2%) added to Cd-Ag, Cd-Ni, or Cd-Ag-Cu bearing alloys greatly improves their resistance to the corrosion caused by acidity that develops under oxidation in some lubricating oils (*128 A 295*). A more practicable method is to deposit a thin plating of indium, electrolytically, on the bearing surface of such an alloy, and then cause the plating to diffuse by heating at 340° F.; indium will thus penetrate to depth of 0.010 to 0.015 in. in 2 hr., and, if present to an amount of 0.4 to 0.5% of the metal to that depth, will completely counteract the most serious corrosion conditions, without causing embrittlement.

Ores. Indium is almost invariably associated with gallium (less consistently with germanium) in sulphide and oxidized ores of zinc; some Western blende concentrates are estimated to contain up to 15 oz. In per ton. It occurs also in iron, manganese, and tin ores. The metal becomes concentrated in the dross of zinc redistillation retorts (*cf.* gallium, Art. 17) and in the residues from purification of $ZnSO_4$ electrolyte, particularly in the cadmium, etc., precipitated upon zinc; lithopone manufacturers employ a similar method of purification.

Prices. In March, 1939, quotations were reduced from $90 per oz. (av.) to $28.35 for 99% and $56.70 for 99.9% metal. The Belgochemie in Belgium, Furnkawa in Japan, and the American Smelting & Refining Co. were reported as producers.

Treatment. Indium is segregated from other constituents of the above-mentioned cadmium mud by repeated and alternated solution in H_2SO_4 and reprecipitation on the purest obtainable zinc; In is the least rapidly soluble of the several metals involved. From the final solution of $In_2(SO_4)_3$, a *large excess* of NH_4OH precipitates $In_2(OH)_3$ while any Zn, Cd, Ni, or Cu remains in solution. Ignition of the washed precipitate (at 600° to 700° C.) yields In_2O_3 about 99.5% pure, which can be reduced electrolytically to metal of 97 to 98.5% grade. The most satisfactory electrolyte is prepared as follows: Dissolve (in proportion of) 200 gm. In_2O_3 in 600 cc. water and 120 cc. of 96% H_2SO_4; add 250 gm. sodium citrate crystals and dilute to 1,000 cc. Electrolyze at ordinary temperature with platinum anode and sheet-steel cathode, at cathode current density of 2 amp. per sq. dcm. Compact deposits up to $^1/_2$-in. thickness are obtained. Electrolyte may be completely denuded, or it may be replenished with wet $In_2(OH)_3$ filter cake; dry or ignited hydroxide is not readily soluble in depleted bath. Cathodes are stripped by heating to 180° C. in an oven (*57 AES 289; 30 IEC 611*).

27. IRIDIUM

Uses. Chiefly as a hardening alloy for platinum; jeweller's platinum usually contains about 10% Ir; alloys with up to 50% Ir are found in certain electrical instruments where brittleness is not objectionable. Other uses for Pt-Ir alloys: pen points, standardized weights, surgical instruments, and needles.

Occurrence. Almost invariably combined (together with other metals of the platinum group) in crude platinum, averaging 1 to 2% Ir in the most productive platinum localities. Alluvial platinum from the Goodnews Bay district, Alaska, is exceptionally rich in iridium, ranging from 5.9 to 22% of the product (*Bul 910-B USGS*). Iridium occurs also in a natural alloy of which osmium is the principal other component (osmiridium, Art. 35). Iridium rarely occurs with the platinum derived from copper-nickel ores.

Production and consumption. Recovery of iridium by U. S. refiners was 1,051 troy oz. in 1939 (having fallen from 2,438 oz. in 1935); in late years 75 to 80% of the output has been recovered from imported crude platinum. Of the total domestic consumption of iridium (4,322 oz. in 1939) about 70% was utilized in jewelry, 21% in electrical devices, remainder for dental and chemical uses.

Prices. Iridium was quoted at $112.67 per troy oz. in 1939, an advance of 62% over the 1938 price, and a much greater increase than occurred with platinum or palladium.

Treatment. For technical methods of separating and recovering Ir from the other platinum metals, see *76 A 602;* for recovery from jeweller's waste, *see TP 342 USBM;* see also *Liddell.*

28. IRON

Uses of iron are multitudinous; it is used almost entirely as cast iron or steel, both of which are alloys or mixtures of iron with carbon and other elements such as phosphorus, manganese, chromium, nickel, tungsten, vanadium, molybdenum, cobalt, silicon, titanium.

Ores. The economic minerals are hematite, magnetite, goethite, limonite, siderite, and very occasionally pyrite. For a deposit of one of the above minerals to constitute an ore it must be favorably located with respect to fluxes, fuel, and markets; it must be of high grade; must occur in large quantity; and must lie so that mining will be possible on a large scale at comparatively low cost. Furthermore, it should be relatively free of titanium, phosphorus, and (excepting the pyrite which will require oxidation and leaching) of sulphur, which are harmful in the finished iron and steel products and difficult or impossible to eliminate. Analyses of typical domestic ores are shown in Table 56.

Table 56. Average composition of typical iron ores

Content	Ore					
					Magnetite	
	High-grade Lake Superior hematite	Siliceous Lake Superior hematite	Clinton hematite *a*	Limonite *b*	Non-titaniferous, N. Y., N. J., Pa.	Titaniferous, N. Y., Colo., Minn., N. C.
Fe	55 to 61	42 to 52	20 to 53	43 to 55	40 to 67.5	34 to 63
P	0.035 to 0.060	0.025 to 0.050	0.30 to 0.50	0.09 to 0.48	0.02 to 1.2	0 to 0.06
S	0 to 0.009	0 to 0.01	0.04 to 0.11	0.01 to 0.09	0.08 to 0.42	.....
SiO_2	.....	20 to 40	8 to 17	11 to 19	1 to 20	0.8 to 18.0
Al_2O_3	.....	.....	3 to 6	2 to 6	0.7 to 4.5	2.5 to 10
CaO	.....	.....	1 to 20	0.1 to 1.0	0.3 to 5.6	0 to 3
MgO	.....	.....	0.4 to 8.0	0 to 0.4	0.2 to 4.2	0 to 6
MnO_2	.....	.....	0 to 0.3	0 to 3.0	0.04 to 1.4	0 to 0.3
TiO_2	.....	.....	.....	.....	0 to Tr.	12 to 16
Cr_2O_3	.....	.....	.....	.....	.....	0 to 2.5
V_2O_5	.....	.....	.....	.....	.....	0.60
H_2O	5 to 12	1 to 4	0 to 2	5 to 12	0 to 1.6	0 to 0.04

a Appalachians from N. Y. to Ala. *b* Ala., Pa., Texas, Iowa.

Most of the iron ore now mined and that mined in the past have been of sufficiently high grade to smelt without concentration, but the end of the known high-grade deposits, located close enough to fuel and to consumption centers to make them presently profitable, is in sight, and an increasing proportion of lower-grade ores is concentrated every year.

Classification of ores (U. S.). No standard official classification exists, but most operators use an approximation of the following terminology:

Merchantable ore assays between 50 and 60% Fe and is smeltable without further enrichment. (See also *Alabama iron ores.*) Limitations as to maximum size and as to percentage of <65-m. may be imposed. Certain near-merchantable ore comprises soft iron mineral admixed with coarse hard siliceous gangue which is readily separated by screening, with or without supplemental hand picking, thus raising the ore to merchantable grade. Certain other ores of near-merchantable grade contain water, either physically held or chemically bound or both, in such quantities that when it is removed by heating the residue is merchantable.

Concentrating ore comprises rock assaying normally from 40 to 50% Fe from which a concentrate of approximately merchantable-ore character can be made, or from which a concentrate can be made that, when mixed with a high-grade merchantable ore, will form a merchantable mixture. Concentrating ores in which the iron minerals are hematite or hydrated oxides are further classified as wash ores and low-grade concentrating ores.

Wash ores. The typical wash ore occurs as alternating bands of high-grade iron oxide and lightly consolidated sand which is predominantly <80-m. After mining, these bands constitute a mixture of lump iron mineral sufficiently hard to resist serious breakage and abrasion when subjected to movement and tumbling such as is incurred in passage through a rotary screen or log washer, and fine relatively iron-free sand. (See Table 57.)

Low-grade concentrating ores are differentiated from wash ores in that the gangue is locked with the ore minerals to the extent that crushing is required to sever the two; they are normally further distinguished by the much coarser size of the gangue aggregates.

Magnetic ores are the ores of magnetite. They may be merchantable as mined, but usually require concentration. They never have the characteristics of wash ores. Estimated reserves (1939) in the Eastern U. S. are 600 million tons of 40 to 60% iron content in New Jersey, 900 million tons of the

same grade in east-northern New York, and 70 to 80 million tons in eastern Pennsylvania. The eastern Mesabi magnetites are of lower grade, but of enormous tonnage.

Nonconcentratable rock simply means iron-bearing rock which cannot be made to yield merchantable concentrate at a profit at present prices with presently known methods of concentration. In the Lake Superior district it embraces both low-grade (20 to 30% Fe) coarse-grained rock and medium to relatively high grade rock (35 to 45% Fe) of such fine texture that fine grinding is necessary to sever the gangue. Concentration is readily effected with both types of rock, but the first has too high a ratio of concentration while the second requires too costly treatment. Known reserves of this rock in the Lake Superior district alone are estimated to amount to 57 billion tons (*22 #12 MCJ 20*), much of it readily minable, and cheaper combinations of concentration and smelting may be expected when the deadening competition of merchantable and high-grade concentrating ores disappears. Not the least of the present deterrents to work on this material is the confiscatory tax system now in effect.

Table 57. Sizing-assay test of typical wash ore (*RI 3052*)

Size	Per cent. weight	Per cent. iron
>1.050-in.	7.65	59.36
0.742	6.73	59.36
0.371	17.12	58.71
4-m.	15.63	59.26
8	9.39	58.80
14	5.76	57.33
28	3.85	55.21
48	2.97	52.44
65	1.40	48.57
100	1.40	41.57
<100	28.10	13.46
Unsized	100.00	45.30

Bessemer and non-Bessemer ores. The Bessemer process of steel making concentrates phosphorus in the steel. Hence shipping product containing more than 0.045% phosphorus is classed as NON-BESSEMER, and concentrating ore which yields such concentrate is likewise non-Bessemer. BESSEMER ORE is ore or concentrate containing less than 0.045% phosphorus.

Manganiferous iron ores are found on the Cuyuna range in Minnesota. The most abundant are the BROWN ORES, which are low in manganese (<10%) and low in silica but high in phosphorus; the BLACK ORES comprise a very intimate mixture of manganite, hematite, and ferruginous chert in which the manganese, which tends to predominate in the coarser sizes, may run as high as 25 to 30% in comparison to a 20 to 30% iron content. Phosphorus is lower than in the brown ore but silica is higher. The black ores as mined usually contain a large amount (up to 30%) of water, both free and combined, and hence are capable of considerable concentration by drying and sintering.

Objectionable impurities in iron ore are those which cannot be removed by concentration and which, if sent to the blast-furnace, carry through the pig iron into the steel in amounts which harm the properties of the steel. The principal impurities in this class are sulphur and phosphorus. Allowable limits are discussed in Art. 50. Silicon is objectionable because it must be slagged off, with attendant proportionate consumption of limestone and coke, which additionally occupy furnace space and thereby reduce furnace capacity and increase labor cost. Titanium requires very high temperatures for reduction; unreduced it thickens slag mechanically.

For production of metal from ores and concentrates see: *Ferrous Production Metallurgy*, J. L. Bray, John Wiley & Sons, Inc. (1942); *Blast Furnace Practice*, R. H. Sweetser, McGraw-Hill Book Co. (1938); *Blast Furnace Practice*, Fred Clements, Ernest Benn, Ltd. (London, 1929).

Production of iron ore in the United States, by states, is given in Table 58. Exports of iron and steel are three to four times greater than imports. World production of pig iron is given in Table 59.

Table 58. United States production of iron ore (thousands of gross tons) (*USGS*)

	1913	1918	1919	1921	1929	1932	1936	1937	1938
Minnesota	43,300	41,954	36,001	17,811	45,761	5,154	31,634	48,417	14,449
Michigan	14,400	16,899	15,439	7,075	15,456	2,555	9,178	12,085	6,004
Alabama	5,850	5,755	5,053	2,876	6,453	1,375	4,180	6,308	4,303
Pennsylvania	548	523	627	147	1,092	103	1,132	2,625	2,121
Wisconsin	1,140	1,089	1,087	257	1,609	430	970	1,156	855
New York	1,633	906	871	470	822	31	778	*a*	*c*
New Jersey	364	424	404	59	281	31	160	520	186
Utah	*a*	53	44	*a*	*a*	137	154	191	168
Missouri	*a*	*a*	*a*	*a*	*a*	30	3	20	29
Tennessee	414	409	284	*a*	102	*a*	28	28	13
Others *b*	1,795	1,647	1,155	588	1,451	1	572	744	319
Total	69,444	69,658	60,965	29,283	73,028	9,847	48,789	72,094	28,447

a Included in "others."

b Includes Georgia, N. Carolina, Wyoming, N. Mexico, Colorado, Connecticut, Maryland, Massachusetts, Nevada, California, Iowa.

c Included in Pennsylvania.

Table 59. World production of pig iron (thousands of gross tons) (*MI*)

	1913	1918	1919	1921	1929	1932	1936	1937	1938
United States	30,966	39,055	31,015	16,688	42,614	8,781	31,029	37,127	19,161
Germany	16,499	10,513	5,566	7,725	13,401	3,933	15,303	15,957	18,226
U.S.S.R.	4,486 *b*	.....	110	100	4,018	6,370	14,400	14,520	14,479
United Kingdom	10,260	9,086	7,398	2,616	7,580	3,573	7,686	8,497	6,763
France	5,126	1,286	2,373	3,308	10,439	5,549	6,237	7,917	5,956
Belgium	2,446	Nil	247	863	3,970	2,783	3,207	3,843	2,426
Japan	56	178	206	95	1,750	1,542	2,869	3,561	3,050
Luxemburg	2,508	1,247	608	955	2,906	1,959	1,987	2,513	1,527
Saar	1,371	.....	.....	.....	2,088	1,349	*a*	*a*	*a*
Czechoslovakia	.....	.....	648	543	1,643	450	1,140	1,675	1,215
India	204	265	320	371	1,348	699	1,541	1,598	1,628
Canada	1,015	1,107	863	616	1,080	144	679	898	758
Italy	429	328	252	76	678	461	816	790	850
Poland	.....	.....	.....	.....	704	199	582	724	952
Sweden	732	766	501	314	490	262	585	646	647
Others *c*	12,809	590	605	955	2,348	1,212	2,203	2,727	2,814
World	77,536	64,421	50,712	35,223	96,263	39,275	89,802	102,848	80,452

a Included under Germany. *b* Russia.
c Includes Spain, Austria, Hungary, China, Australia, Netherlands, Rumania, Brazil.

Selling. See Art. 50.

Lake Superior base prices f.o.b. Lake Erie docks for Old Range Bessemer ore have ranged from $4.75 to $5.25 per long ton over the period 1929–1943; Old Range non-Bessemer and Mesabi Bessemer bases have been 15¢ off these prices, and Mesabi non-Bessemer 30¢ off.

Treatment. Iron is the second most widely distributed metal and constitutes the fourth largest elementary component of the earth's crust. The iron content of most rocks is higher than that of the valuable-metal content of the ores of most other metals. But workable iron ores are relatively limited in distribution because iron is a low-priced commodity and consequently must be present in high natural concentration in a rock in order that the cost of mining, beneficiation, and reduction per unit of iron content may bring production cost below the market price of the metal.

The primary product from iron ore is pig iron, produced by smelting in a blast furnace. Hence the requirements for economic blast-furnace operation set the specifications for iron-ore shipments. These requirements differ in different parts of the world. The furnaces which treat the ores from the Lake Superior mines are located at the lower Great Lakes ports and south therefrom as far as Pittsburg; their schedule for merchantable ore is based on a minimum assay of 51.5% natural iron and a SiO_2 maximum of about 10 to 12%. In the Birmingham district, because of the self-fluxing nature of the ore, lower iron and somewhat higher silica contents are acceptable. Eastern and foreign furnaces have yet different standard requirements.

The desideratum in iron-ore treatment is maximum weight recovery with iron content in concentrate above a guaranteed minimum and size within specified maximum and minimum limits.

Crushing plants are those in which merchantable ore too coarse for ready passage around the blast-furnace bell are crushed to a maximum size ranging from 8-in. to, say, 3-in., according to the blast-furnace feed arrangements. The crushing is normally one-stage jaw crushing, but conceivably two stages with intermediate scalping would be necessary, if large lumps of hard ore needed crushing to 3-in. maximum. Crushing is the most widely used form of iron-ore dressing.

Drying plants and sintering plants. Cuyuna range ores may contain as high as 30% water as mined; fine concentrate will normally contain from 10 to 40% moisture, according to size and the method of dewatering. Marked changes in iron content on an as-shipped basis can, therefore, be made by drying, with an incidental saving in freight. Simple drying will not, in general, drive off combined water; it has also the disadvantage of increasing dusting in handling and furnacing. Sintering drives off combined water, agglomerates fines into porous lumps, and improves the furnace behavior markedly. Drying is usually done in direct-heat rotary driers (Sec. 17, Art. 3). For sintering practice see *Bray; Sweetser.* The heat in the discharge from the sintering machines is utilized to dry lump ore by dumping the two together into the steel gondola cars in which they are shipped from the mill.

Screening plant. The simplest form of concentration is typified by the early plant at the SUSQUEHANNA mine at Hibbing, Minn. (*102 J 787*), where masses of taconite occurred

scattered through the hematite. In the earliest operations the taconite was picked out ahead of the steam shovels and hauled away in dump cars. This expensive operation was replaced by screening.

The ore was loaded by steam shovel into 12-cyd. air-operated side-dump cars, taken to the screening plant and dumped onto a flat grizzly with 30-in. spacing. Oversize was sledged through into a bin. From the bin the ore was drawn into a 5×24-ft. revolving stone screen with 2-in. round holes. Oversize was waste, which discharged into a car-loading bin, whence it was hauled to a rock dump. Undersize went to the shipping bins. Capacity of this plant was about 250 t.p.h. and it required only about 30 hp.

Washing plants utilize tumbling in water to disintegrate lightly clay-bound sand and to abrade adhering sand from lump hematite, and sizing by classification and/or by screens to separate the resulting mixture of relatively coarser hematite and fine sand and clay. Such plants are typified by some twenty-odd mills in the western Mesabi district. Upward of 80% of all Minnesota iron concentrate is obtained by washing.

The older practice (see Fig. 83, *Ed. 1*, p. 140) was to hand-pick waste from >2-in. material, the residue being concentrate; log-wash <2-in. size, taking the washed product as concentrate; rewash the overflow in turbo washers, again taking the washed product as concentrate; desliming turbo-washer overflow in settling tanks, discarding slime, and concentrating the granular settlings on shaking tables.

Modern Mesabi practice is represented by the flowsheet of the CANISTEO plant (Fig. 84) in which the second stage of log washing and the tabling have been replaced by a bowl-rake classifier, and in which provision is made for crushing and hand-picking lump concentrate whenever this is desirable. In one plant screens and Akins classifiers have displaced the log washers.

Weight recovery in modern Mesabi washing plants averages about 65% on crude. Costs are 5 to 10¢ per ton treated.

DeVaney and Coghill (*RI 3148*) point out that bowl-rake product, which contains 14 to 18% SiO_2, must be admixed with high-grade material to make it salable, and that when the product runs much higher in silica than this it may even be wasted. They report a test on such a product, assaying 44% Fe and 34% SiO_2, in which the material was sorted in a hindered-settling classifier, classifier overflow was wasted, six spigot products were tabled separately, with regrind and retabling of middling, resulting in a recovery of 46% by weight in a concentrate assaying 63% Fe and 9% insol., with an additional recovery of 55% by weight from the 20% of middling made in the primary runs, in a concentrate assaying 61% Fe. Tailing from the primary run assayed 17% Fe. Their results indicate that the early spigots of the classifier could be taken as concentrate directly, leaving only the later spigots for tabling. They estimate, on the basis of commercial table performances on similar materials, that table capacities would average 2.5 tons feed per hr. See also Sec. 10, Art. 7.

Oliver Iron Mining Co., Canisteo washing plant. Fig. 84 (*142 ⅝5 J 36*).

Location: Coleraine, Minn.
Ore: Loose mixture of soft hematite and taconite sand.
Cost: $0.06 to $0.15 per ton of feed is an average range (1938) for this type of plant.

Legend for Fig. 84:

1. 1 @ 100-ton concrete ore pocket at pit; 1 @ 8-ft. pan conveyor.
2. Bar grizzly, 4-in. openings.
3. 1 @ 5-ft. pan conveyor, large waste rock dumped into rock chutes from which it is trucked to waste in 1 1/2-ton dump trucks.
4. 1 @ 40×42-in. jaw crusher.
5. 3 @ 36-in. inclined (18°+) belt conveyors, 1,000 ft. total horizontal run.
6. 1 @ 5×41-ft. 2-deck vibrating screen.
7. 36-in. picking belts.
8. Cone crushers, set 5/8-in.
9. Log washers.
10. 4×6-ft. vibrating screens.
11. 17-ft. bowl-rake classifiers.
12. 24-in. conveyors to ore cars for shipment.

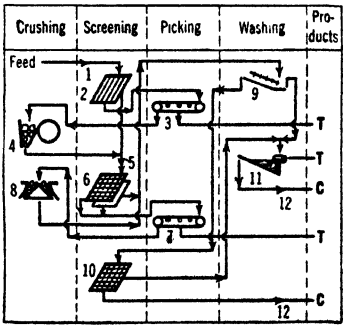

FIG. 84. OLIVER IRON MINING CO., Canisteo plant.

Concentrating plants for iron ores must be mechanically efficient, cheap to operate, and capable of handling large tonnages. Of the standard base price of $4.50 per ton (1936) for non-Bessemer ore of 51.5% natural iron content at lower Lake ports, $1.74 is freight, leaving a net value at the mine of $2.76. Out of this must come mining and concentrating costs royalties, and a multitude of onerous taxes. Consequently the ratio of concentration must

be low, if any profit at all is to come out of the operation. From an economic standpoint an ore or a concentrating process that requires fine crushing or grinding of any considerable part of the feed tonnage to effect separation is *prima facie* unsuitable at present.

The typical Lake Superior concentrating plant is a combination comprising coarse concentrators, normally jigs, for rejecting coarse gangue, and washing apparatus for removing the fine free sand and the fine gangue produced by crushing. Holt (*22 #12 MCJ 20*) gives a generalized flowsheet (Fig. 85), noting that the types of concentrating machines used vary considerably throughout the district. The CHARLESON plant (Fig. 86) is a modern plant of this type. In a new jig plant (*141 #2 J 82*) ore is crushed to <1/2-in.; jigged unsized in Conset jigs, which make coarse concentrate and coarse tailing;

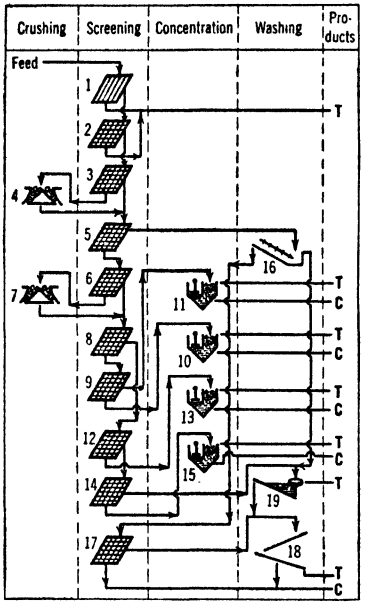

Legend for Fig. 85:

1. Grizzly, 5 1/2-in. openings.
2. Revolving screen, 3 1/2-in. aperture.
3. Vibrating screen, 1 1/4-in. aperture. Horizontal shaking screens are displacing vibrating screens in some plants on account of saving in headroom and lower screen wear. (*139 #2 J 68.*)
4. Gyratory-type reduction crusher.
5. Vibrating screen, 1/4-in. aperture.
6. Vibrating screen, 1 1/4-in. aperture.
7. Gyratory-type reduction crusher.
8. Vibrating screen, 5/8-in. aperture.
9. Vibrating screen, 0.8-in. aperture.
10. 8-cell McLanahan jig.
11. 12-cell McLanahan jig.
12. Vibrating screen, 3/8-in. aperture.
13. As (11).
14. Vibrating screen, 1/8-in. aperture.
15. As (10).
16. Log washer.
17. Vibrating screen, 0.09-in. aperture.
18. Rheolaveur.
19. Bowl classifier.

FIG. 85. Typical Mesabi jig plant.

a fine tailing which is deslimed in a Hydroseparator and a rake classifier in series, with classifier sands returned to the jigs; and a middling which is ground in rod mills, deslimed in a rake classifier, and the resulting sand recirculated to the jigs. The advantageous results are: an increase in jig efficiency because the relatively high proportion of sand in the feed tends to produce heavy-medium character in the jig bed; and increased recovery of iron. Jig concentrate sinters readily. Weight recovery in the jigging plants is about 50% of the crude. The HARRISON PLANT of Butler Bros. employs a sink-float separating cone in place of coarse jigs, thus doing away with 3 screening and 3 jigging operations as compared to Fig. 85, and making a lower-grade tailing than can be made on jigs treating the same material (see Sec. 11, Art. 29). The roasting-magnetic plant of BUTLER BROS. is an experimental attack on the problem of treating high-grade jig tailing (containing much porous and consequently specifically light hematite particles), of which large tonnages are scattered through the western Mesabi district; it made exceptionally high grade concentrate and a good tailing for iron concentration, but costs were too high for present-day competition.

The number of plants on the Mesabi employing concentrators other than washers is relatively small, and concentrate shipped is only about one-eighth the tonnage of washed ore.

Charleson Iron Mining Co., Judd pit. Fig. 86 (C. H. Remer, Gen'l Sup't, *139 #3 J 38*).

Location: Taconite, Minn.
Ore: Banded hematite and partly decomposed taconite.
Capacity: 300 long t.p.h.
Assays: Feed, 30 to 35% Fe; concentrate, 52 to 53% Fe.
Recovery: 35 to 40%.
Power: 800 hp. under full load.

Summary. Two-stage crushing to 1/2-in. in closed circuit; washing at <1/2-in.; jigging at <1/4-in.

Legend for Fig. 86:

1. By truck from shovel to rock hopper in pit floor; 1 @ 5×12-ft. Robins reciprocating feeder.
2. Bar grizzly.
3. 1 @ 36×48-in. A-C jaw crusher, 5-in. set.
4. 3 @ 30-in. belt conveyors in series, 800-ft. total length, 200-ft. total lift, 360 f.p.m.; with Merrick weightometer, electrical interlock, magnetic head pulley on final.
5. 1 @ 6×12-ft. Robins 2-deck screen, 3 1/2×5-in. and 1/2-in. sq. apertures.
6. 24-in. conveyor.
7. 1 @ 4-ft. short-head cone.
8. 2 @ 24-in. inclined conveyors.
9. 1 @ 25-ft. A-C log washer.
10. 1 A-C low-head screen, 1/4-in. sq. aperture.
11. 1 @ 24-in. belt conveyor.
12. 2 @ 5×12-ft. A-C screens, 5/16-in. sq. aperture.
13. Akins classifier.
14. Alternative.
15. Rake classifier.
16. 80-m.; 15% Fe or less.
17. 65-m.
18. 2 @ 24-in. belt conveyors in series; 1 @ 400-ton bin.

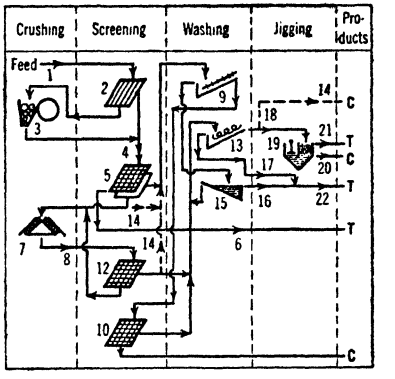

19. 2 @ 3-cell plunger-type jigs, star gates and elevators.
20. Drag-belt; 2@18-in. conveyors in series; bin.
21. Drag-belt, 24-in. stacking conveyor.
22. Sand pump, 2,000 g.p.m. capacity, 2,000 ft. to tailing pond.

FIG. 86. CHARLESON IRON MINING CO., Judd pit.

Butler Bros., Harrison plant. Fig. 87 (*Q; 141 #9 J 34; 26 #9 MCJ 25*).

Location: Cooley, Minn.

Ore: Concentrating ore, comprising soft hematite with taconite and sand.

Assays: Feed: 40 to 45% Fe; concentrate, 59% Fe, 7 to 9% SiO_2.

Recovery: 80 to 85% Fe.

Water is pumped 1 mi. from Pickerel Lake.

Power: Purchased at 2,200 volts; motors, 440-volt, 60-cycle; CONSUMPTION, 18 hp-hr. per ton.

Running time: 95%.

Mill building: Level site. Steel and concrete, galvanized-iron partial enclosure. Unheated (unused in winter).

Transportation: Mine (open-pit) to mill, 1 mi. Ore is trucked in pit to a conveyor-loading hopper, thence by conveyor to rim of pit, thence by dump car and locomotive to mill. Concentrate (7% moisture) is shipped to lower Great Lakes furnaces (Chicago, Cleveland).

Legend for Fig. 87:

1. Grizzly, 5 1/2-in. aperture.
2. Rock cars.
3. Storage bin; conveyor with automatic scale.
4. 1 @ 4×12-ft. vibrating screen, 3 1/2-in. aperture.
5. Conveyor.
6. 1 @ 6×12-ft. vibrating screen, 1 1/4-in. aperture.
7. 1 @ 4-ft. standard cone crusher.
8. 1 @ 6×16-ft. vibrating screen, 1/4-in. aperture.
9. Conveyor with magnetic head pulley; tramp iron to concentrate.
10. 1 @ 5×14-ft. Robins Eliptex screen, 1/4-in. aperture, with wash sprays.
11. 1 @ 25-ft. 2-log washer.
12. 1 @ 20-ft. bowl classifier.
13. 2 @ 7 1/2-ft. sink-float cones. See Sec. 11, Art. 28.
14. Conveyor.
15. 1 @ 4×8-ft. vibrating screen, 1/4-in. aperture.
16. 7 Bendelari and 1 Conset jigs.
17. 2 @ 4×6-ft. vibrating draining screens, 2-mm. apertures; 2 @ 5×16-ft. 2-mm. vibrating washing screens; washings to medium-recovery plant.
18. 2 @ 4×6-ft. vibrating draining screens, 2-mm. cloth; 2 @ 4×16-ft. 2-mm. vibrating washing screens; washings to medium-recovery plant.

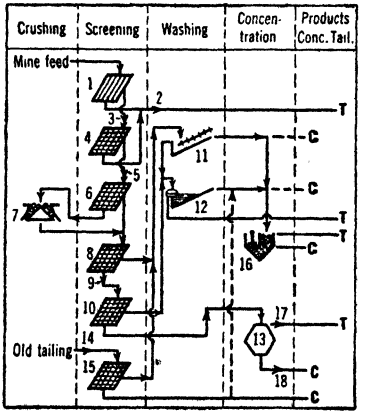

FIG. 87. BUTLER BROS., Harrison cone plant.

Summary. Run-of-mine material >3 1/2-in. rejected by screening; 3 1/2~1 1/4-in. crushed to <1 1/4-in. and screened on 1/4-in. 1 1/4~1/4-in. treated in sink-float cone making concentrate and tailing. <1/4-in. washed in log washers and bowl classifiers, the latter making overflow tailing, and both sending washed products to jigs which make concentrate and tailing.

Butler Bros. roasting-magnetic plant. Fig. 88 (J. J. Craig, Sup't, *139 # 1 J 48; 153 A 645*.

Location: Cooley, Minn.

Ore: <1 1/4-in. jig tailing consisting principally of comparatively clean hematite, comparatively clean silica, taconite, and locked combinations of the three.

Capacity: 265 tons feed per 24 hrs.; limited by the furnace.

Assays: Feed, 47% Fe; concentrate, 62.6%; SiO_2, 11.4%; P, 0.045%; <100-m. size held at 10% or less; tailing, 20.6% Fe, including 6% magnetic Fe.

Recovery: 90% based on furnace product; recovery of magnetic iron, 98.9%.

Ratio of concentration: 1.5 : 1.

Costs: The operation is marginal, *i.e.*, dependent upon feeds against which mining cost need not be charged. Its inception was experimental. Roasting cost, Sept. 1935: fuel, $0.555 per ton roasted; power, 0.050; labor, 0.072; total, $0.677.

Legend for Fig. 88:

1. Vertical-shaft drier. Oil fuel. Moisture reduced from 8 or 10 to 3%.
2. Crusher.
3. Screen, 3/4-in. aperture.
4. Vertical-shaft roasting furnace with water-quench at base. Oil fuel; oil vapor for reduction from Fe_2O_3 to Fe_3O_4. Reduction must be substantially complete (average conversion is 91%), a "skin roast" does not confer sufficient magnetic force to move the mass of unconverted hematite. Iron silicates do not reduce.
5. 2 pipe conveyors in series.
6. Trommel, 3/16-in. aperture.
7. Bucket elevator.
8. Vibrating screen, 5/16-in. aperture.
9. Magnetic cobber, 31(diam.)×32-in. drums; see Sec. 13, Art. 4.
10. Conveyor; 220-volt a.-c. demagnetizing coil surrounding a 3 1/2-in. Micarta tube through which pulp flows; bin; mixed with other ores before shipment. Demagnetization enables water to drain and facilitates mixing.
11. As (9).

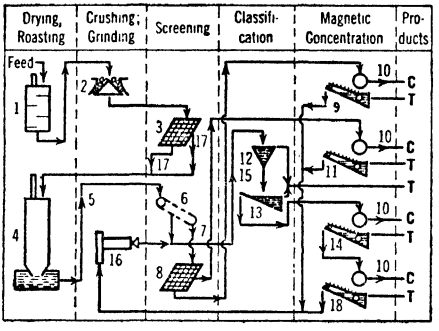

12. Settling cone.
13. Rake classifier.
14. As (9), 2 in parallel.
15. Sand pump.
16. 1 @ 5×4-ft. ball mill.
17. Separate elevators to separate feed bins.
18. As (9).

FIG. 88. BUTLER BROS., roasting-magnetic plant.

Summary. One-stage crushing, reducing roast, wet magnetic separation with regrind and reconcentration of middling.

Recovery by this method is high, as is also the grade of concentrate, but costs at present are so high, compared with those for jigging and washing, as to make concentrate so produced of marginal value so long as concentrate from the latter plants sets the market price.

Magnetic plants. The Eastern magnetites have been mined spasmodically for more than 100 years. The WITHERBEE, SHERMAN Co. dry-magnetic mills (*Ed. 1*) are typical of the method used for many years on the coarsely crystalline, lower-grade ores. Modern demands for higher grade of concentrate with reduced phosphorus have made necessary finer crushing before making final concentrate, and the adoption of wet magnetic separators. All of the magnetite ores contain martite, the permeability of which is too low for the low-intensity separators used for magnetite; where the amount of martite is sufficiently large to justify saving it, gravity concentration supplements magnetic, as at ALAN WOOD. The ore at the BETHLEHEM STEEL property at Cornwall, Pa., contains chalcopyrite as well as magnetite, and the tailing from wet magnetic concentration is, therefore, reground and floated.

Costs of treatment at the eastern mills are about 20 to 25¢ per ton of feed.

Most magnetite concentrate is too fine for blast-furnace treatment without sintering, but sintered, the high-iron (>68%) low-silica product commands a premium. On the other hand, Eastern magnetite concentrate suffers at present from a freight differential to the steel centers.

The principle followed in concentration of all magnetite ores is to scalp out middling at coarse sizes at relatively high intensities and reject tailing, then to recrush the middling and direct the concentration to the production of high-grade concentrate from this enriched feed. This principle was carried to its logical extreme at the MESABI IRON Co. mill, which was designed to treat the low-grade magnetic ores of the eastern Mesabi field. The mill was a technical success and represents the best method known to date for concentrating this

ore; it has been shut down, however, since 1924 because concentrate so produced cannot compete in that field with hematite ore and concentrate.

Magnetic concentrate other than the finest must, normally, be cleaned on gravity concentrators if high-grade concentrate is wanted, because the magnetic machines put much locked middling in concentrate.

Warren Foundry & Pipe Corp. Fig. 89 (*Q* by F. Radel, Sup't).

Location: Wharton, N. J.

Ore: Magnetite, 62%; apatite, 3%; with feldspars, hornblende, and biotite; there is a negligible amount of quartz and no pyrite or martite.

Capacity: 238 tons per shift.

Assays: Feed, 45% Fe; concentrate, >67% Fe; tailing, ±7% Fe.

Recovery: 93%.

Ratio of concentration, 1.72 : 1.

Water: None used.

Power: Purchased; comes 4 mi. at 33,000 volts; motors, 440-volt; magnets, 250-volt; CONSUMPTION, 8.3 hp-hr. per ton milled.

Labor: 22.2 tons per man-shift; repairs average 15 to 20% of total labor.

Running time: 81%; lost time due to repairs.

Mill building: Frame with some concrete and steel underpinning; wood floors. Machinery handled by chain blocks.

Distances: 1,000 ft. mine to mill by railroad cars; 75-mi. rail haul to smelter.

Tailing disposal: Coarse tailing sold for concrete aggregate; fine tailing flushed through launder with mine water to an adjacent swamp.

Legend for Fig. 89:

1. Bin.
2. Ring grizzly, 2-in. spacing.
3. Gyratory crusher.
4. Bucket elevator.
5. Hum-mer screen, 3/4-in. aperture.
6. Rolls.
7. Conveyor; 1 @ 5×5×45-ft. tower drier; bucket elevator.
8. Tandem single-deck Hum-mer screen, *a* = 1/8-in. aperture, *b* = 1/16-in. aperture.
9. 1 @ 1-drum magnetic separator.
10. As (4).
11. 1 @ 2-deck Hum-mer screen, 5/8- and 1/8-in. apertures.
12. As (6).
13. As (9).
14. As (6).
15. 1 @ 2-drum magnetic separator; *a* = low-intensity drum, *b* = high-intensity drum.
16. As (15).
17. 1 as (5), 1/16-in. aperture.
18. As (15).
19. As (4).
20. 3 as (5), 1/16-in. aperture.
21. 2 as (15).
22. As (6).
23. 1 @ 1-belt Ball-Norton magnetic separator.
24. 1 as (15).
25. 1 @ 2-belt Ball-Norton magnetic separator.

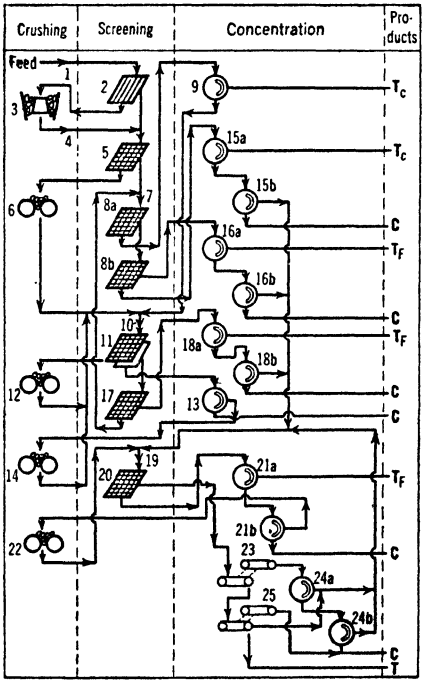

FIG. 89. WARREN FOUNDRY & PIPE CORP.

Summary. Three-stage crushing in gyratory and rolls to <3/4-in. Dry magnetic concentration of primary products at 4 sizes, rejecting tailing at all sizes and making concentrate at sizes below 1/8-in. Middling recrushed to <1/8-in. and retreated with cleaning of concentrate and recirculation of cleaner middling to the crushing circuit.

This is the only completely dry magnetic mill still operating on magnetite ore in the United States. The older mills of REPUBLIC STEEL CO. at Mineville, N. Y., are still primarily dry concentrators, but wet-magnetic separation has been installed for the fine sizes; the new mill of REPUBLIC at Port Henry uses wet-magnetic separators on all machines making finished concentrate.

Mesabi Iron Co. Fig. 90 (*Q; 23 LSMI 111*).

Location: Babbitt, Minn.
Ore: Magnetite in ferruginous chert (taconite).
Capacity: See flowsheet. Ultimate planned, 75,000 tons per 24 hr.
Assays: See Table 60.
Recovery, magnetic iron: 80%.
Ratio of concentration: 2.9 : 1.
Distances: Mine to mill, 3 mi.

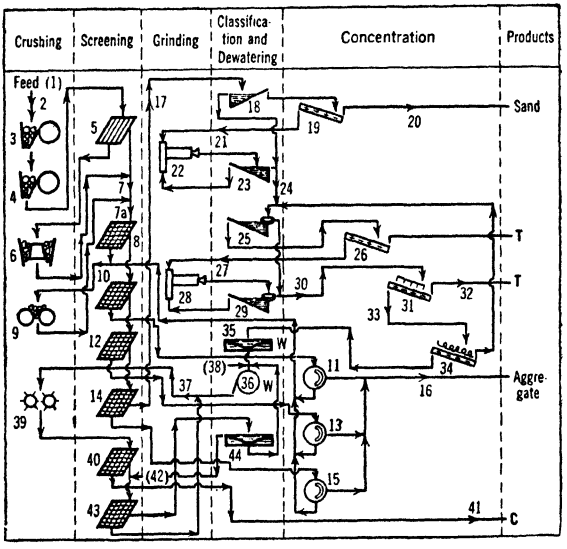

Legend for Fig. 90:

1. Ore from steam-shovel pit, 400 to 500 t.p.h.

2. 12-cyd. side-dump cars; 1 @ 250-ton pocket; 1 @ 8-ft. apron feeder.

3. 1 @ 48×72-in. jaw crusher, 10-in. set.

4. 1 @ 36×54-in. jaw crusher, 4.5-in. set.

5. Grizzly, 2-in. spaces.

6. 4 @ No. 9 gyratory crushers, 2-in. set. (7-ft. cones will probably be substituted here when this plant resumes operation.) For assembly of these machines for gravity flow see Fig. 91.

7. 1 @ 48-in. belt conveyor; 10,000-ton stockpile (Capacity to this point as (1); ore is drawn from stockpile to duplicate units at rate of 150 t.p.h. each; flowsheet for one only shown below.); feeders.

7a. 1 @ 30-in. belt conveyor.

8. 1 Mitchell screen, 2-in. aperture.

9. 1 @ 78×20-in. rolls.

10. 1 Mitchell screen, 1 1/4-in. openings.

11. Magnetic grader.

12. 2 Hum-mer screens, 0.5-in. aperture.

13. 2 Magnetic cobbers.

14. 2 Hum-mer screens, 6-m. aperture.

15. 2 Magnetic cobbers.

16. Crushed-rock storage bins for aggregate market. See Table 60.

17. 100,000-ton stockpile (Fig. 91). See Table 60. Feed rate to following apparatus 30 t.p.h. 18-in. belt conveyor.

18. 1 @ 6×22-ft. duplex rake classifier.

19. 1 @ 4 1/2×14 3/4-ft. rake-type duplex wet magnetic cobber.

20. Sand bin for market. See Table 60.

21. Demagnetizer. See Table 60.

22. 2 @ 8-ft.×22-in. conical ball mills.

23. 4 @ 8×22-ft. duplex rake classifiers; <48-m. overflow.

24. Demagnetizer.

25. 1 @ 18(diam.)×6×36-ft. bowl-rake classifier; <150-m. overflow.

26. As (19).

27. As (24).

28. 1 @ 8-ft.×22-in. conical ball mill.

29. 2 @ 9(diam.)×8×22-ft. bowl-rake classifiers; <150-m. overflow.

30. See Table 60.

31. 5 @ 6-ft. magnetic logs, rake-type.

32, 33. See Table 60.

34. 5 @ 6-ft. magnetic logs, spiral-type; conc., 20 t.p.h.

35. 1 @ 30-ft. thickener.

36. 2 @ 5×6-ft. Oliver filters; cake, 11% moisture.

37. Cake breaker; 1 @ 42-in.×65-ft. Dwight-Lloyd sintering machine.

38. About 5% by weight of anthracite dust, cake breeze, or other fine fuel added.

39. Toothed rolls, 4-in. set.

40. Trommel, 3/4-in. aperture.

41. 1 @ 36-in. pan conveyor. See Table 60.

42. Water added.

43. Trommel, 1/4-in. aperture.

44. 1 @ 30-ft. thickener.

FIG. 90. MESABI IRON CO.

Summary. Four-stage crushing from steam-shovel size to 6-m. with tailing rejection started at 2-in. size and comprising 28% of total feed in the 2-in.~6-m. range; further rejection of 20% on <6-m. feed before regrinding. Rough primary concentrate reground and cleaned at 48~150- and <150-m. Sand-cleaner concentrate reground to 150 *mog* and then recleaned in two stages. Concentrate sintered before shipment.

Arrangement of machines is shown in Fig. 91. The features of particular interest are the arrangement of the breakers in a rock pit, 50 ft. square by 105 ft. deep; the use of conveyors for all elevation of ore; and the use of stock piles instead of bins for storage.

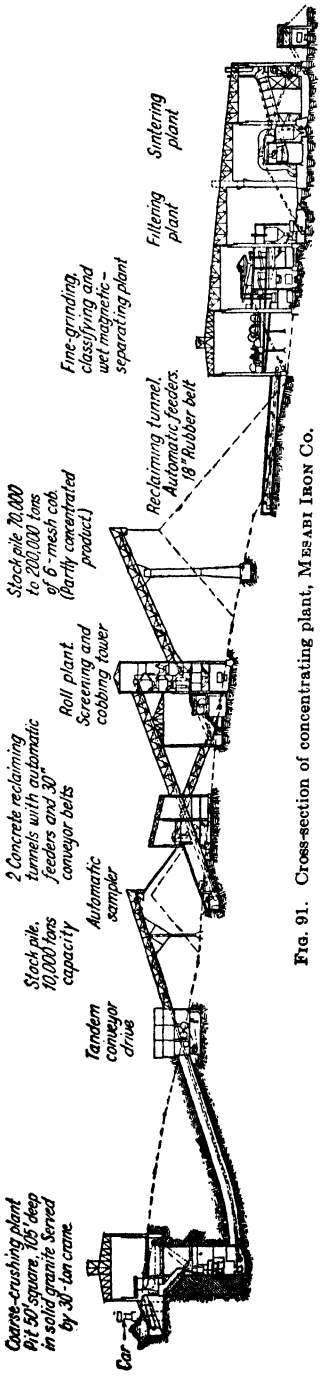

Fig. 91. Cross-section of concentrating plant, Mesabi Iron Co.

Table 60. Assays at Mesabi Iron Co.

Ref. No. *a*	Material	Weight, %	Magnetic Fe, %
1	Feed	100	26.5
16	Aggregate	28.4	10.8
17	Cobbed rough conc.	71.6	32.7
20	Sand tailing	19.3	8.6
21	Rough sand conc.	52.3	41.6
30	Rough slime conc.	47.7	45.2
32	Slime tailing	12.8	3.1
33	Rake-log conc.	34.9	61.8
41	Final conc.	34.5	63 to 65 *b*
.....	Tailing, total	65.5	8.2

a Numbers refer to flowsheet, Fig. 90.

b Also, SiO_2, 8 to 10%; P, 0.025 to 0.032%; small amounts of Mn, Ca, Mg.

Republic Steel Co. Fig. 92 (*PC*).

Location: Port Henry, N. Y.

Ore: Banded and disseminated magnetite in gneiss.

Capacity: 2,000 tons per 24 hr.

Assays: Feed, 40 to 50% Fe; concentrate, 63 to 65% Fe, 0.02% P.

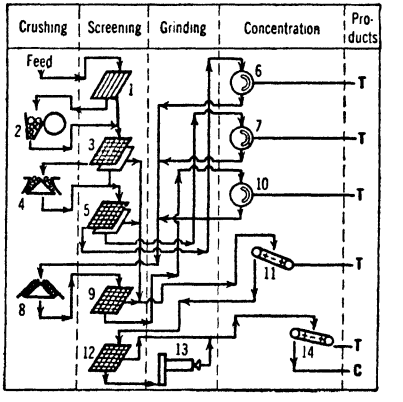

Legend for Fig. 92:

1 1 grizzly, 6-in. spaces.
2. Jaw crusher, 6-in. set.
3. 2 @ 5×12-ft. 2-deck Ty-rock screens, 1 1/4- and 1/4-in. cover.
4. 1 @ 7-ft. standard cone.
5. 2 @ 5×12-ft. 2-deck Ty-rock screens, 3/4- and 1/4-in. cover.
6. Pulley-type magnets.
7. Pulley-type magnets.
8. 1 short-head cone.
9. 2 @ 5×12-ft. Ty-rock screens, 1/4-in. cover.
10. Pulley-type magnets.
11. Crockett magnetic roughers.
12. 3×8-ft. Ty-rock screens, 10-m. Ty-rod cover.
13. 8×8-ft. A-C ball mills.
14. Crockett magnetic finishers.

Fig. 92. Republic Steel Co.

Summary. Three-stage crushing from run-of-mine to <1/4-in.; step magnetic rejection of tailing at about 1 1/4~3/4-, 3/4~1/4-, and 1/2~1/4-in. sizes; magnetic roughing the above middling

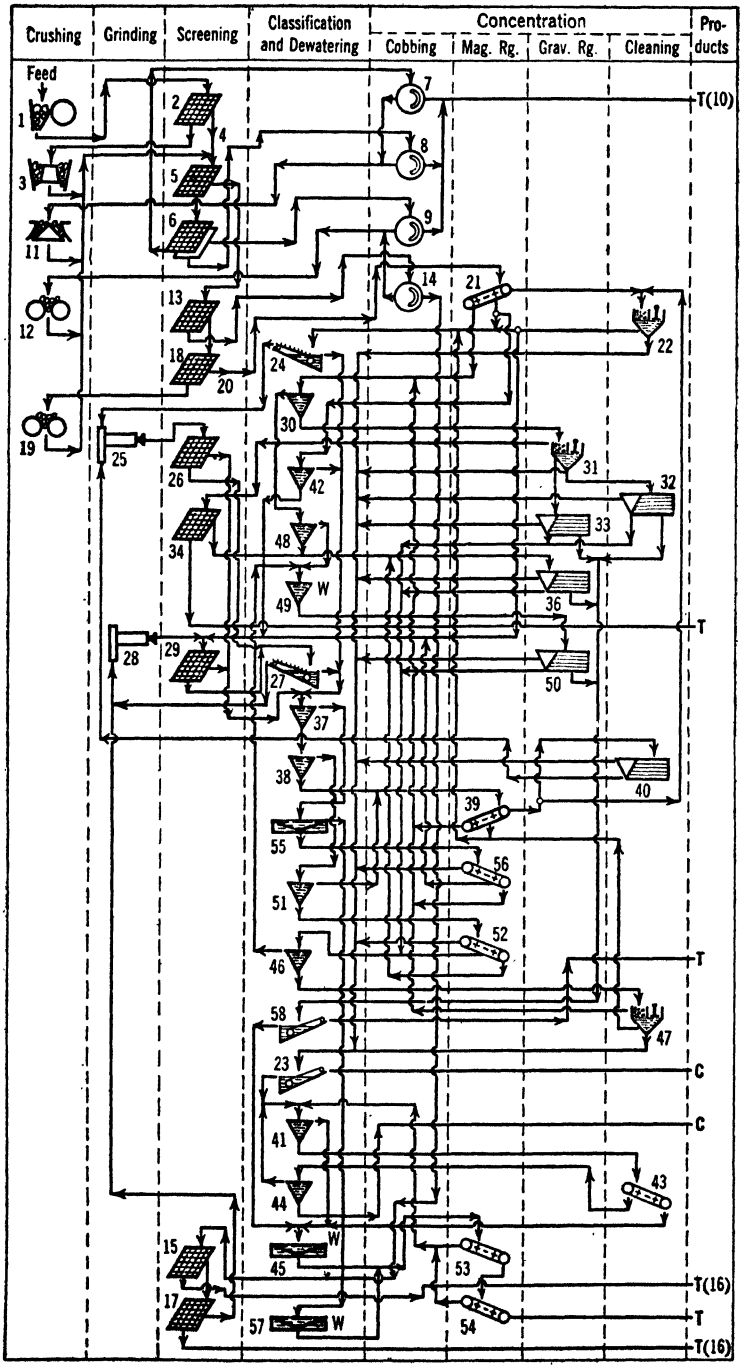

FIG. 93. ALAN WOOD STEEL CO., Scrub Oaks mill.

after reduction to <1/4-in. together with original <1/4-in. material; regrind of rough concentrate to <10-m., followed by magnetic cleaning.

Alan Wood Steel Co., Scrub Oaks mill. Fig. 93 (*Q* by N. M. Levine).

Location: Dover, N. J.
Ore: Magnetite and martite in gneiss; fine crystallization.
Capacity: 3,600 tons per 24 hr.
Assays, % Fe: Feed, 27 to 33; concentrate, 66 to 68; tailing, 5 to 5.5.
Recovery: 92.4%.
Ratio of concentration: 2.8 : 1.

Legend for Fig. 93:

1. Underground jaw crusher to about 6-in. skips; 1,000-ton steel bin.
2. Gyrex screen, 2 1/8-in. aperture.
3. Gyratory crusher, 2 1/4-in. closed setting; 100-hp. motor.
4. Sinter-type drier if ore is moist enough to blind following screens.
5. 1 @ V-400 and 1 @ V-64 Hum-mer screen, 5/8-in. aperture.
6. 1 Symons shaking screen, 2 1/8- and 1 1/8-in. apertures.
7. 1 pulley-type cobbing magnet.
8. As (7).
9. As (7).
10. Sized by trommel to >2-in., 2~1 1/2-in., 1 1/2~1 1/4-in., and 1 1/4~5/8-in. and stored in shipping-bin compartments for sale as aggregate stone.
11. 1 @ 5 1/2-ft. standard cone crusher, 1 1/8-in. set.
12. 1 @ 54×20-in. rolls, set close.
13. 8 @ V-32 Hum-mer screens, 1/4-in. aperture.
14. 3 pairs of magnetic cobbers.
15. Ty-rock screen, 7/16-in. aperture.
16. Fine aggregate stone.
17. Ty-rock screen, 0.147-in. aperture.
18. 8 @ V-16 Hum-mers, 0.108-in. aperture.
19. 1 @ 60×18-in. rolls, set close.
20. Conveyors; weightometer; tripper; fine-ore bin. Material assays about 38% Fe.
21. 4 Crockett-type wet-belt magnetic separators; about 7.5 amp. per machine; concentrate 55 to 62% Fe; tailing about 18% Fe, practically all martite.
22. 1 @ 3-cell and 2 @ 2-cell Bendelari jigs; 1 @ 2-cell Scrub Oaks jig (modified James-type); 165 r.p.m. To drop locked middling. Concentrate 67 to 70% Fe.
23. Drag dewaterer. Table concentrate, 64 to 68% Fe.
24. As (23).
25. 1 @ 5×10-ft. open-end rod mill; 2-in. chrome-steel rods. Feed, 3% >10-m., 4% <100-m.; product 3% >14-m., 13% <100-m.
26. Hum-mer screen, 0.055-in. aperture.
27. As (23).
28. 1 @ 6×12-ft. grate ball mill, 3-in. balls. Feed, 10% >10-m., 3% <100-m.; product, 4% >10-m., 9% < 100-m.
29. 4 as (26).
30. 2 @ 4-ft. Allen cones.
31. 2 @ 3-cell Bendelari sand jigs. Tailing 8.2 to 9.8% Fe; middling 40 to 55% Fe; concentrate first two cells about 66% Fe.
32. 4 shaking tables.
33. As (32).
34. 2 as (26).
35. Sand tailing for sale; Fe, 5 to 7%.
36. 16 shaking tables.
37. 2-box spitzkasten.
38. Desliming cone.
39. 3 as (21). Current 2 to 3.5 amp.; concentrate, about 60% Fe.
40. 8 shaking tables; 304 @ 7/8-in. s.p.m.; concentrate, 67 to 70% Fe.
41. 10-ft. Allen cone.
42. Deslimer.
43. 1 as (21).
44. 4-ft. Allen cone.
45. 1 @ 60-ft. thickener.
46. Deslimer.
47. 1 @ 3-cell jig.
48. 2 @ 6-ft. Allen cones.
49. 3 @ 10-ft. Allen cones.
50. 8 slime tables; 304 @ 3/4-in. s.p.m. Feed practically all <200-m.
51. 4-ft. Allen cone.
52. 12-in. magnetic separator; concentrate 64 to 67% Fe.
53. 1 as (21).
54. 1 as (21); combined concentrate (53) and (54) <60% Fe.
55. 30-ft. thickener.
56. 3 as (21). Current 4 to 9 amp.; concentrate, 64 to 67% Fe.
57. 50-ft. thickener.
58. Dewatering drag. Feed (combined table tailing), 3.5 to 6% Fe.

Summary. Four-stage crushing from >16-in. to <5/8-in. with >1/4-in. product roughed magnetically at 4 sizes from >2 1/4-in. to >1/4-in. and nonmagnetic tailing discharged for sizing and sale as aggregate stone. Enriched material crushed to <1/4-in. and concentrated successively on magnetic and gravity roughers, with rough concentrates cleaned on gravity concentrators. All middling reground in tumbling mills to <12-m. and reconcentrated as on the primary stream, with middling recirculated to the grinding circuit.

Hvitafors concentrator. Fig. 94 (*72 Gl 1073*).

Location: Hvitafors, Malmberget, N. Sweden.
Ore: Middle products from 4 other concentrators treating coarse mine ore by hand-picking and magnetic separators. Hvitafors feed contains about 75% magnetite with some feebly magnetic specular hematite; nearly 5% apatite; remainder, gangue minerals. Maximum size, <35 mm.
Capacity: 80 tons per hr.

Assays: Feed: Fe, 40%, P, 0.9%; concentrate I (about 3/4 of total output): 70% Fe, 0.02% P (max.); concentrate II (about 1/4 of total output): 65% Fe; 0.4% P; concentrate with 71.4% Fe has been made.
Recovery: 80%.
Ratio of concentration: 2.22 : 1.

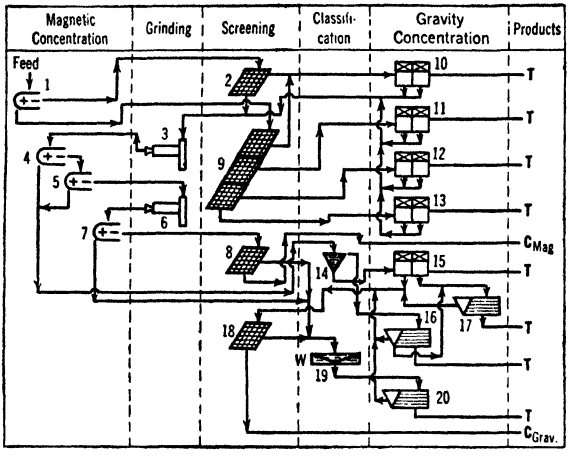

FIG. 94. HVITAFORS mill.

Legend for Fig. 94:

1. Alliance magnetic separator; 100-volt d.-c.
2. Shaking screen, 3-mm. aperture.
3. 3 ball mills.
4. 11 as (1).
5. 6 as (1).
6. 7 tube mills.
7. 36 as (1).
8. Dewatering screen.
9. Shaking screen, 10-, 20- and 30-mm. apertures.
10. Jig.
11. Jig.
12. Jig.
13. 2 jigs.
14. 8 desliming boxes.
15. 8 jigs.
16. 6 shaking tables.
17. 4 as (16).
18. As (8).
19. Thickener.
20. Shaking table.

Summary. Magnetic roughing and gravity scavenging of unsized reground middlings containing magnetite and hematite.

Pegnitz mill. Fig. 95 (*57 SuE 732*).

Location: Pegnitz, Bavaria.
Ore: Oölitic hematite (DOGGER ORE) in grains rarely exceeding 0.3-mm.
Capacity: 850 metric tons raw ore per 24 hr.
Assays: Feed: 30% Fe, 12% H_2O; concentrate, 43% Fe; tailing, 13% Fe.
Recovery: 80%.
Ratio of concentration: 2.1 : 1.
Costs (1937): Power, 0.28 M; fuel, 0.32 M, supplies and miscellaneous, 0.65 to 0.70 M; labor (apparently slave), 0.00 M; total, 1.25 to 1.30 M.

Legend for Fig. 95:

1. Rotary car dump; track hopper; belt feeder.
2. Hammer mill.
3. Elevator; bin; clam-shell excavator; chute; automatic scales.
4. Rotary drier, reducing moisture from 12 to 1.5%. With low-grade (3,000 kg-cal.) brown coal, consumption is 3% weight of ore.
5. Dust collector.
6. Elevator; hopper; belt feeder.
7. Roller mills.
8. Belt conveyor and vertical elevator.
9. Cyclone dust collector.
10. As (9).
11. Vibrating screen, 0.6-mm. aperture.
12. As (7).
13. As (11).
14. Elevator.
15. 3 @ 2-pole high-intensity magnetic separators in series; total energy, for magnetization and operation, 2.8 kw. for capacity of 5 to 6 tons per hr.

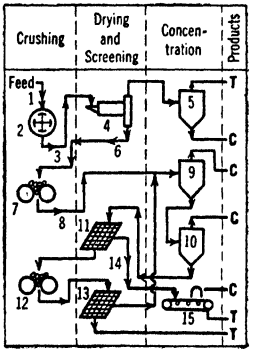

FIG. 95. PEGNITZ mill.

Summary. Differential grinding; concentration by air classification followed by high-intensity magnetic separation of the classifier sands.

Alabama iron ores are of two principal varieties, *viz.*, (1) the red ores of the Birmingham district, and (2) the brown ores in an area comprising an irregular annulus surrounding the red ore. The red ores that have been mined are mostly of shipping grade (45 to 50% Fe), the Alabama furnaces being able to tolerate this lower grade, with correspondingly higher silica content, economically, on account of the lime content of the ore and the

resulting self-fluxing character. The structure of the ore also, comprising onionlike shells of very fine hematite, lime carbonate, and clay consolidated around markedly larger grains of quartz, has prevented mining of the lower grades of ore on account of inability to wash or otherwise concentrate it. (See p. 150 for a record of laboratory attempts to solve this problem.) The BROWN ORES comprise hydrated iron oxides occurring in more or less irregular deposits of highly variable extent in surface wash of clay, sand, and gravel. The iron mineral is concretionary and consequently harder than the clay and heavier than the sand and gravel; there is no true locking of valuable mineral and gangue. Consequently treatment comprises disintegration and washing away of the clay and fine sand from the harder iron nodules and gravel, and gravity concentration to separate iron minerals and gravel.

The size and complexity of the plants depend upon the size of the deposits and the extent of admixture of the gravel. In all cases selective mining plays a large part; isolated small deposits in which gravel cannot be largely separated in mining are not workable, except under circumstances in which the ore can be transported economically to a plant treating large enough tonnages of gravel-bearing ore to justify jigs.

Three characteristic types of plants are employed, *viz.*, (1) screening plants, (2) washing plants, (3) jig plants. (See also Fig. 97.)

Screening plant. Feed, usually trucked in, is dumped into a chute set below the angle of repose and is washed therethrough and over a grizzly (3- to 4-in. aperture) by a stream from a nozzle. Large gravel, clay balls, and other waste are picked off the grizzly and large lumps of ore are sledged through. Grizzly undersize goes to a revolving washing screen, 4 to 5 ft. diam. × 10 to 14 ft. long, with 1/2- to 1-in. aperture plate covered with 1/8- to 3/16-in. wire cloth. Oversize is hand picked to remove clay balls and gravel, the residue being concentrate; undersize is wasted. WATER CONSUMPTION is 150 to 350 g.p.m. for 50 to 150 tons feed per day. If the sand and finer ore nodules are tightly clay-bound, more vigorous disintegration than can be effected by this method is required.

Washing plants. A typical washing plant for 100 to 150 cyd. of crude per hr. is shown in Fig. 96 (*108 P 458; A TP 860*). WATER REQUIREMENT is about 2,000 g.p.t. of feed.

Legend for Fig. 96:

1. Ore comes from one or more open pits by side-dump cars or by trucks.

2. Heavy rail grizzly, 1 1/2 ft. wide, 4-in. spacing, 1 1/2 to 2 in. per ft. slope, forming a false bottom for a V-shaped receiving hopper, 5 to 6 ft. wide at the top, 50 to 60 ft. long, 2 to 3 ft. deep at the upper end, bottom 1 1/2 ft. wide sloping 2 1/2 in. per ft. Feed is washed on the grizzly with a stream from a nozzle, waste is picked off, and oversize ore is sledged through. If the amount of oversize requiring sledging is sufficient to warrant a crusher of the roll or fine gyratory type, one may be installed to crush oversize and deliver to (3).

3. Conical revolving stone screen of one or two sections, 10 to 16 ft. long, 2- to 3- or 2- and 3-in. apertures; strong washing spray.

4. Picking belt or pan conveyor, about 24-in. Clay balls and gravel removed. Oversize may be recrushed to 2 in. in rolls or fine gyratory and the crushed product be rescreened and rinsed on a fine screen (undersize to waste) before being sent to concentrate bins.

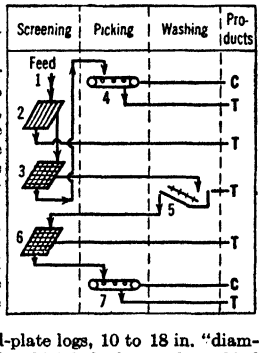

5. 2 @ 20- to 30-ft. double-log washers; square or octagonal welded-plate logs, 10 to 18 in. "diameter," with steel blades about 9 to 10 in. long, 5 1/4 in. wide, and 1 1/4 in. thick bolted to angles welded to the logs so as to form a single or double spiral. Slope of logs and trough bottom is about 1 in. per ft. Sheet-steel trough ranges from 4 ft. deep at lower end to 2 ft. deep at upper, is flat-bottomed and wide enough to give about 6-in. clearance of blades at sides. Logs are gear-driven at 12 to 20 r.p.m. An adjustable overflow gate is provided.

6. 2 @ 32- and 42-in.×8-ft. revolving screen; inner shell is plate 3/8- to 1/2-×1 1/4- to 2-in. slotted openings, outer is lighter plate with 1/16- to 3/32×1/2-in. slots. A strong washing spray is used. Oversizes are combined.

7. Picking belt or pan conveyor, about 24-in. Clay balls and gravel removed, comprising about 50% of the belt feed.

FIG. 96. Alabama brown-ore washing plant.

POWER installation is about 100 hp. for the plant shown, including pumps; add about 25 hp. per crusher, if these are used. RECOVERY, as defined in the field, is the inverse of the ratio of concentration and ranges from 1/3 to 1/12, averaging about 1/5. CONCENTRATE assays 42 to 50% Fe, about 1% or less of Mn, and 0.5 to 1% P. COST of concentrate, with a recovery not less than 1/6, was from $0.50 to $0.75 per ton in 1914.

Jig plant differs from that shown in Fig. 96, in that the oversize from the sand screen (item 6) is sent to jigs. Hancock jigs have been used on feeds ranging from 1/16- to 3/4- or 1-in., but present practice is to size rather closely (*e.g.*, 1~3/4-in., 3/4~1/2-in., 1/2~1/4-in., and 1/4~1/16-in.) and treat the grades on separate cells of a jig of the McLanahan type.

Capacity of such jigs is 20 to 25 tons per cell Clay should be removed from the feed as much as is economically possible.

Fine tailing from the washing plants contains considerable fine ore. Various attempts have been made at recovery. Tabling after hydraulic classification gives the best results, but has in general proved too expensive to justify installations.

Spaulding concentrator (Fig. 97), built in 1943, is a red-ore concentrating plant built under war-time impetus. Operating data are not available. The principle of treatment is to scuff off the very fine iron mineral from silica by light treatment in rod mills, and to recover it, while at the same time granular iron mineral is saved on tables.

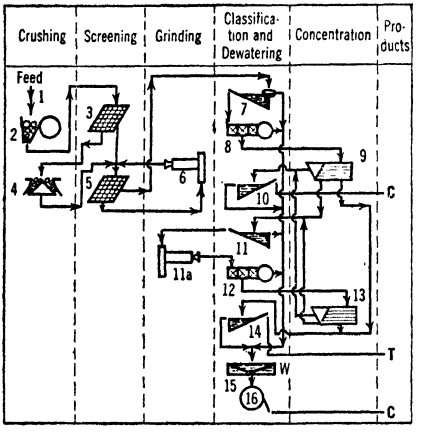

Legend for Fig. 97:

1. One of two sections, each with capacity of 1,000 tons per 24 hr.
2. Jaw crusher.
3. Ty-rock screen, 3/8-in. aperture.
4. Symons crusher.
5. 2 Ty-rock screens, 7-m. cover.
6. 1 @ 6×8-ft. rod mill.
7. 1 @ 16(diam.)×8×33-ft. bowl-rake classifier.
8. 2 @ 8-pocket Deister classifiers.
9. 16 Deister tables on different spigot products.
10. 1 @ 4-ft. rake-type classifier.
11. 1 as (10).
11*a*. 1 ball mill.
12. 2 as (8).
13. 16 as (9).
14. 1 as (10).
15. 1 @ 145-ft. thickener.
16. 2 @ 10-disk 10-ft. Eimco filters.

FIG. 97. SPAULDING concentrator.

Siderite ores are treated in Germany by close sizing and jigging, or by roasting to form magnetic iron compounds and then separating magnetically. Typical flowsheets are shown in Figs. 98 and 99.

Alte Hütte mill. Fig. 98 (*57 SuE 289*).

Location: Wissen, Rhenish Prussia.

Ore: Mangano-siderite (reaching 80% of ore as mined) with some specular hematite and minor quantities of Fe, Cu, Pb, Zn sulphides in quartz; graywacke and slate. In typical ore of district, 50% or more is free iron carbonate, 20% is free gangue.

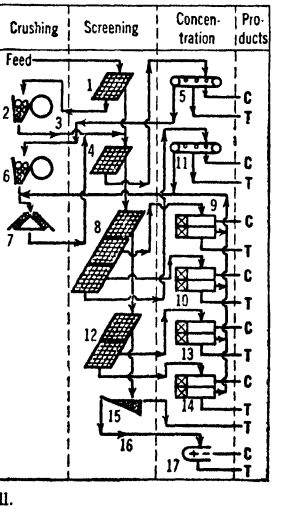

Legend for Fig. 98:

1. Horizontal shaking screen, 200-mm. aperture.
2. Jaw crusher.
3. 2 bins; steam-rail haul; 1 bin; shaking feeder.
4. Screen, 60-mm. aperture.
5. Picking belt.
6. Jaw crusher.
7. "Double cone" crusher, set 6-mm.
8. Shaking screen, 12-, 24- and 40-mm. apertures.
9. Humboldt movable-sieve jig.
10. As (9).
11. As (5).
12. Shaking screen, 2- and 6-mm. openings.
13. As (9).
14. As (9).
15. Drag deslimer.
16. Rotary drier.
17. Magnetic drum separator.

FIG. 98. ALTE HÜTTE mill.

Assays (typical of district): Fe, 28 to 32%; Mn, 5 to 6%; SiO_2, 12 to 20%; Cu, 0 to 0.5%.

Recoveries and assays of products at a mill employing a process similar to that in Fig. 98, except that middle products, instead of being recirculated, are removed and separately treated, are given in Table 61.

Table 61. Recoveries at Eisenhardter mill, Sieg district

Product	Weight, %	Assays, %		Distribution, %	
		Fe	Mn	Fe	Mn
Concentrate...	73.47	35.67	6.77	81.90	82.40
Middlings.....	14.53	30.09	5.71	13.67	13.74
Copper ore....	0.34	34.30	1.63	0.36	0.09
Tailing.....	10.36	9.80	1.73	3.18	2.96
Slime (waste)..	1.30	21.78	3.75	0.89	0.81
	100.00	31.99	6.04	100.00	100.00

Summary. Primary crushing to <200-mm. Hand-picking down to 40-mm. Stage sizing (without further crushing) and jigging down to 2-mm. Fines deslimed; sand dried and magnetically separated; slimes wasted. All middlings recrushed to <6-mm. and recirculated. Other mills of Sieg district employ Harz-type jigs at 45-mm. and below, with hand-picking of concentrates down to 18-mm., and separate treatment for middlings.

Eupel mill. Fig. 99 (*57 SuE 292*).

Location: Sieg district, Rhenish Prussia.

Ore: Roasted mangano-siderite similar to that treated in Alte Hütte mill (Fig. 98).

Capacity: 30 met. tons roasted ore per hr. (approx. equivalent to 40 tons raw ore).

Assays and weights of products at two other mills using similar methods on same type of ore are given in Table 62; at mill *A*, recovery of Fe was 93.5%; at mill *B*, 91%.

Legend for Fig. 99:

1. Crusher delivering <120-mm. product.
2. Roasting kiln.
3. Aerial tramway; bin.
4. 2-deck vibrating screen, 70- and 35-mm. apertures.
5. Picking belt.
6. As (5).
7. Jaw crusher, 40-mm. set.
8. 2-jacketed trommel, 18- and 35-mm. apertures.
9. As (5).
10. Drum-type magnetic separator.
11. Rolls, 20-mm. set.
12. 2-jacketed trommel, 6- and 12-mm. apertures.
13. As (10).
14. As (10).
15. As (10).
16. Ball mill, about 4-mm. maximum discharge.
17. As (10).

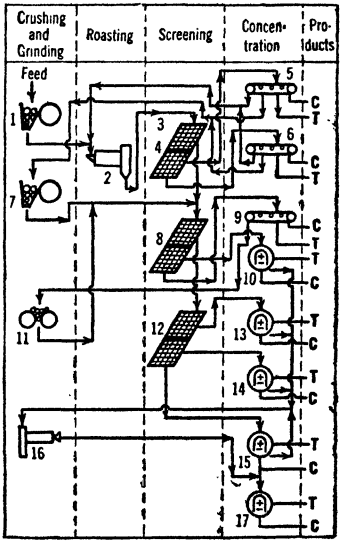

FIG. 99. EUPEL mill.

Summary. Primary crushing to 120-mm.; roasting to render material magnetic; sizing to 6 grades; hand-picking down to 35-mm., magnetic concentration of smaller sizes; all primary magnetic middlings combined, reground, and rerun once.

Experimental. Much testing work has been done against the day when the reserves of high-grade ores of the Mesabi and southern field, the wash ores, and the easily concentratable hematities and magnetites are exhausted. Treatment of low-grade ores of coarse dissemination presents no technical difficulties; the magnetites can be treated in the present mills without change; the nonmagnetic oxides are treatable as at the roasting-magnetic plant of BUTLER BROS. (Fig. 88); the practical question is simply that of ratio of concentration. The finely disseminated low-grade magnetites will now yield high-grade concentrate at a cost of about $3.50 per ton, according to Davis' analysis (*22 #1 MCJ 88*)

Table 62. Products from magnetic separation of roasted spathic iron ore at two plants in Sieg district

Mill *A*			Mill *B*		
Size, mm.	Weight, %	Assay, % Fe	Size, mm.	Weight, %	Assay, % Fe
Concentrate					
>35	6.2	51.1	15~30	20.6	50.7
15~35	4.4	46.8	7~15	8.7	52.7
3~15	14.1	49.8	<7	23.0	52.5
<3	14.4	47.9	*a*	17.4	45.8
a	18.9	46.3	Dust	1.1	32.0
a	11.3	38.0	.....	.....	.....
Total conc.....	69.4	46.4	.....	70.8	50.0
Tailing					
>35	5.2	5.2	15~30	8.4	8.4
15~35	9.2	8.2	7~15	6.5	11.6
3~15	4.9	7.8	<7	6.3	17.3
<3	11.3	7.6	*a*	7.9	10.8
Total tailing.....	30.6	7.4	.....	29.2	11.7
Feed.....	100.0	34.5	.....	100.0	38.8

a Products from recrushed middlings.

of the MESABI IRON operation. The treatment of nonmagnetic material of corresponding grade and structure is not commercially promising despite that the roasting-magnetic principle is applicable. Such material must be sufficiently finely ground to at least expose, if not sever, the iron-mineral particles before roasting, which involves low-capacity roasting and high dust losses, plus dry grinding or drying of wet unroasted slimes, in addition to the MESABI IRON costs.

Successful flotation of finely disseminated iron-oxide ores has not yet been reported, even in the laboratory. Fatty acids and their soaps will activate hematite (and probably some of the hydrated oxides) but slimes prevent selective flotation, and losses of expensively ground material are too high, if rejection of slime prior to flotation is practiced. Flotation of quartz gives promising results both technically and economically.

Promising test results are reported on some special simpler materials. DeVaney and Coghill (*IC 3052*) worked with wash-ore tailing which, discharged at about 20% Fe, had undergone natural concentration in ponds until the granular residues assayed 45 to 50% Fe. They found that with such feed assaying 45% Fe, jigging the >10-m. fraction, classifying <10-m. hydraulically, discarding classifier overflow, and tabling the spigot products yielded concentrate assaying 61% Fe and a 25% tailing, constituting 76% recovery. By roasting-magnetic treatment, tailing as low as 2.2% Fe and 64.6% Fe in concentrate were made (97% recovery), but costs were, of course, much higher.

Alabama oölitic ores and the fossil ores of the same district comprise onionlike shells of admixed limy clay and iron oxides surrounding cores of relatively coarse sand grains. Gravity concentration and flotation have failed to separate the silica when the material is sufficiently ground by normal methods to effect severance. Roasting-magnetic treatment of such a product yields concentrate assaying 50 to 60% Fe and 8 to 20% SiO_2 with silica rejections of 50 to 95% and recoveries of 85 to 97% (*Bul 278 USBM*) but at a probable cost that would be uneconomic. Differential grinding of <3/8-in. feed in lightly loaded rod or slug mills, which shells off the iron minerals without breaking the quartz grains materially, using a mechanical classifier to overflow concentrate, and tabling the classifier sands after hydraulic sorting yielded concentrate assaying 48.7% Fe, 12.5% insol., and 5.2% CaO with a recovery of 82.5% of the iron from a feed assaying 36.6% Fe, 27.7% insol., and 7.4% CaO (*RI 2937; RI 3523; 139 #11 J 43*). See Fig. 97.

Manganiferous ores of the Cuyuna range were tested by DeVaney and Clemmer (*RI 3045*). The material tested was a BLACK ORE (Art. 31). Classification and tabling yielded concentrate assaying 35% Fe, 21% Mn, and 10% insol. (Mn recovery, 72%) from a feed carrying 32% Fe, 16% Mn and 20% insol. Flotation of a feed assaying 26% Fe, 23% Mn, and 19% insol. gave concentrate assaying 26% Fe, 29% Mn, and 10% insol. with a recovery of 68% of the Mn. Roasting-magnetic treatment in an endeavor to make a manganese product of ferromanganese grade (9 to 10 times as much Mn as Fe) was unsuccessful owing to the fact that 40% of the manganese was still locked with the iron at 325-m. Zappfe (*22 #11 MCJ 17*) mentions a roasting-leaching method for separation of manganese from these ores.

Flotation of wash-ore tailing. Searles (*UM*) reported flotation tests on wash-ore tailings of which sizing-assay tests are shown in Table 63. Tests, using fatty-acid collectors ± oils, in alkaline pulps, were made on both original samples and on deslimed residues. The latter gave the poorer flotation results and a markedly higher over-all tailing. Two pounds oleic acid per ton, with 4 lb. sodium carbonate, yielded rough concentrate assaying 53.4% Fe and tailing of 3.6% Fe, with 34.4% weight recovery and 88.7% recovery of iron; reflotation with the addition of 0.7 lb. soda ash per ton of original feed yielded a concentrate assaying 60.5% Fe. No locked test was made. Reagent cost would be excessive, however, from an economic standpoint; assuming 4 tons original feed per ton of concentrate and prices of 1.1¢ per lb. for soda ash and 9.5¢ for oleic acid, the reagent cost per ton of concentrate

would be 93.6¢. Further tests using various substantially neutral hydrocarbons (both from petroleum and from coal tar) as partial substitutes for oleic acid showed possibilities of some reduction in reagent cost, the best results being obtained with a mixture of 9 parts Barrett 634 and 1 part oleic in an amount equivalent to 4.3 lb. per ton of feed, with 1 lb. NaOH, which yielded 56.6% Fe in concentrate, 24.0% Fe in tailing (from a richer feed than shown in Table 63), and a recovery of 75%. A reagent made by reconstructing a fatty acid with sulphur, when used in an amount equivalent to 0.6 lb. per ton of feed, with 1 lb. sodium silicate, showed 60 to 75% recovery in a concentrate assaying 56 to 57% Fe, and a tailing assaying 25 to 30% Fe, on a 42% feed; on feeds of 18 to 25% Fe, recoveries were 48 to 73%, concentrate assays 53.4 to 57.4% Fe, and tailing assays 6.6 to 16.2% Fe. Searles estimates the reagent cost for such operation at about 15¢ per ton of concentrate.

Table 63. Sizing-assay test of wash-ore tailings

Size, microns		Sample											
		A			*B*			*C*			*D*		
SiO_2	Fe	Weight, %	Fe, %	% total Fe	Weight, %	Fe, %	% total Fe	Weight, %	Fe, %	% total Fe	Weight, %	Fe, %	% total Fe
>147	147	2.0	29.6	3.0	3.5	36.8	8.5	6.5	14.7	5.1	1.0	50.6	2.7
104	104	7.5	31.6	12.0	7.5	30.9	15.4	17.5	14.6	13.8	6.5	42.8	14.9
74	74	7.5	23.2	8.8	7.5	25.5	12.7	12.5	13.0	8.7	11.0	21.2	12.5
53	53	13.5	18.9	12.9	14.0	14.7	13.6	15.4	12.3	10.3	14.0	21.9	16.5
43	43	6.0	13.1	4.0	6.5	12.1	5.2	6.5	11.0	3.8	12.0	15.8	10.2
40	27	10.8	16.8	9.2	10.2	13.1	8.8	10.9	21.6	12.6	12.9	18.7	13.1
28	19	16.7	13.5	11.4	20.6	8.6	11.6	10.4	19.3	10.8	18.3	11.3	11.3
20	13	12.7	14.8	9.5	13.8	8.6	7.8	7.0	20.9	7.8	11.6	11.9	7.6
14	9	8.4	16.2	7.0	8.0	9.2	4.8	5.8	30.2	9.3	6.6	13.4	4.9
10	7	5.2	20.4	5.4	3.6	11.1	2.6	3.6	40.4	7.8	3.0	14.2	2.3
<10	<7	9.7	34.0	16.8	4.8	28.0	9.0	3.9	47.7	10.0	3.1	23.3	4.0
Total	.....	100.0	19.7	100.0	100.0	15.1	100.0	100.0	18.6	100.0	100.0	18.5	100.0

Keck (*139 #4 J 46*) reports laboratory flotation of gypsum (S bearer) from hematite with sodium oleyl sulphate, reducing the gypsum content from 0.8% to 0.08%; also that with sodium oleate and sodium silicate the gypsum floats first; he says also that ammonium palmolate (NH_4 soap of palm oil) reduced the P content (apatite) from 0.32% in feed to 0.18% in tailing, the float assaying 0.55% P.

The obvious avenue of attack on coarsely disseminated ore would seem to be table flotation (Sec. 12, Art. 30) of deslimed feed, using a neutral oil with a light loading of fatty acid for a collector. This would tend to grade up concentrate and reduce the expense of collector and size preparation, and the actual separation would be high-capacity operation and correspondingly cheap.

29. LEAD AND ZINC

Occasionally one of these metals is found in economic quantities in an ore in which the other is lacking or is but a minor constituent; such occurrence is, however, so rare that the localities can almost be counted on the fingers of one hand, *e.g.*, lead in southeastern Missouri, Leadville, Colo., and Tintic, Utah, and zinc at Mascot, Tenn., Franklin Furnace, N. J., and southwestern Wisconsin. The usual ores contain galena and sphalerite, many carry important amounts of silver; minor amounts of copper are not uncommon and are usually accompanied by minor quantities of gold; pyrite and pyrrhotite are common associates; carbonates and quartz are the most usual rock-forming gangue minerals, but other gangue associates are legion.

Lead

Uses. The principal consumption of lead is as the metal and peroxide in storage batteries, as metal in cable coverings, and as white lead ($xPbCO_3 \cdot yPb(OH)_2$) in paint. The metal, on account of its noncorrosive properties, also finds wide use for pipes, flashing, etc., in buildings. Considerable metallic lead is used for ammunition making. Important lead alloys are solder, pewter, type metal, bearing metal, and various low-fusing metals. The oxides PbO and Pb_3O_4 are used in glass, rubber, and paint manufacture. Lead arsenate is used as an insecticide, but calcium arsenate is more common.

Ores. The economic minerals are galena, cerussite, anglesite, and pyromorphite. Galena ores comprise the great majority. There are three general classes: (*a*) those containing lead alone as an economic metal; (*b*) lead-zinc ores; (*c*) lead-silver ores. Calcite, dolomite, and pyrite are the common gangue minerals of the first two classes, quartz of the third class.

Production of lead in the United States, by states, is given in Table 64. World production is shown in Table 65.

Table 64. Mine production of lead in the United States *a* (thousands of short tons) (*MI*)

	1913	1918	1919	1921	1929	1933	1936	1937	1938 *c*
Missouri, Kansas, Oklahoma	157.1	251.5	208.2	208.8	302.7	109.1	147.3	203.5	156.6
Idaho	137.8	142.6	89.1	99.7	147.6	74.4	91.4	103.7	90.5
Utah	71.1	76.2	65.1	51.9	157.1	58.7	69.9	89.5	66.0
Arizona	4.9	6.2	5.4	3.3	8.2	1.7	10.7	12.5*c*	10.3
Colorado	42.8	29.4	18.4	12.1	23.7	2.4	7.3	9.8	9.9
Montana	3.3	17.6	17.5	11.6	26.8	6.6	19.1	18.0	8.6
New Mexico	1.8	5.1	1.4	0.4	12.2	11.0	6.6	6.5	4.7
Nevada	6.1	8.7	6.0	3.6	13.3	2.3	10.7	9.3	4.6
Washington *d*	.....	0.9	1.1	0.3	0.1	0.8	0.9	2.9	4.2
Eastern States	0.9	0.1	.....	.....	.....	3.1	6.0	5.5	7.5
Alaska	.....	0.5	0.6	0.8	1.3	1.2	0.9	0.8	1.0
Other central states *b*	3.4	6.3	7.4	1.4	3.4	1.0	1.3	1.3	0.6
California	3.3	6.2	2.0	0.6	1.5	0.4	0.5	1.2	0.5
Other states *e*	3.8	5.4	5.0	0.8	7.5	.....	.....	.....	.....
Total	436.4	556.9	427.8	395.3	686.0	272.7	372.9	465.0	365.4

a Figures to and including 1929 are "Primary Lead, Smelted and Refined," apportioned according to source of ore, *USBM*; later figures are mine production, *USBM*.
b Ill., Ky., Tex., S. D., Wis., Ark., Tenn.
c Preliminary figures.
d Includes Oregon.
e Undistributed residues.

Table 65. World production of lead (smelter production in thousands of metric tons) (*MI*)

	1913	1918	1919	1921	1929	1932	1936	1937	1938
United States	396.0	504.6	412.7	369.1	624.2	251.7	362.9	426.3	344.4
Mexico	62.0	88.4	78.6	60.5	248.8	130.3	218.3	231.2	242.7
Australia	110.4	169.4	84.1	57.2	177.3	189.2	200.6	234.4	235.7
Canada	17.1	23.3	19.9	30.2	144.4	117.7	167.5	186.4	185.7
Germany	181.1	74.6	51.5	75.0	97.9	95.2	139.0	162.4	171.7
Belgium	53.6	20.6	4.2	29.8	62.2	61.5	65.1	88.0	90.5
Burma	6.0	19.4	19.4	34.3	81.5	72.3	74.3	78.9	81.4
U.S.S.R.	.....	.....	.....	.....	6.2	18.7	50.8	55.0	69.0
Italy	21.7	18.3	16.5	12.5	22.7	31.5	36.8	39.5	43.3
France	28.8	12.8	10.9	15.5	20.5	11.6	7.2	37.2	41.8
Spain	198.8	169.7	125.7	135.9	123.3	109.8	46.6	30.0	36.0
Africa	.....	9.3	12.9	18.0	20.6	14.1	21.0	27.6	23.8
Japan	3.8	10.8	5.8	3.1	3.4	6.4	8.9	10.2	12.0
United Kingdom	18.5	11.1	11.5	2.5	10.8	7.5	16.4	12.1	11.0
Austria	1.4	.....	.....	6.1	6.6	2.0	8.7	10.8	9.3
Greece	18.3	4.1	3.8	5.6	5.4	6.4	4.1	5.3	4.0
Others *a*	23.6	26.0	28.0	24.2	87.6	52.6	60.1	84.3	102.9
Total	1,141.1	1,162.4	885.5	879.5	1,743.4	1,178.5	1,488.3	1,719.6	1,705.2

a Includes Argentina, Peru, Czechoslovakia, Yugoslavia, Rumania, Poland, Tunis, China, and Turkey.

Selling. See Art. 50. New York prices for pig lead averaged 6.01¢ per lb. for the 10-yr. period 1913–1922; 6.56¢, 1923–1932; and 4.97¢, 1933–1942. Yearly averages: 1929, 6.83¢; 1932, 3.18¢; 1937, 6.01¢; 1938, 4.74¢. St. Louis prices average 0.12 to 0.14¢ below New York. Yearly average Joplin prices for lead concentrates (Art. 50) were: $89.05 per short ton in 1929; 1932, $34.78; 1937, $69.34; 1938, $51.61.

Zinc

Uses. The important uses are in coating iron to protect it against corrosion (GALVANIZING); BRASS making (zinc, 20 to 50%; copper, 80 to 50% ± small amounts of tin, lead, and iron); as a constituent of other alloys such as GERMAN SILVER (copper, nickel, zinc) and WHITE METAL (zinc and copper, zinc predominating); in zinc-white pigment; as the positive pole or plate in electrical batteries; zinc shavings and dust in cyanide precipitation; gutters, household utensils, etc., where resistance to corrosion by air and water is desirable.

Ores. The economic minerals are sphalerite, smithsonite, calamine, franklinite, willemite, and zincite. There are several distinct types of ores. Argentiferous and auriferous zinc sulphides with or without some lead, copper, and iron sulphides in quartzose gangue are typical of the Rocky Mountain deposits. Sphalerite alone or with galena and, usually, with some pyrite in limestone are typical of the Mississippi Valley deposits. Zinc as-

franklinite, willemite, and zincite in a white, crystalline limestone is the characteristic occurrence in New Jersey. Sulphide ore bodies may be overlain by deposits of smithsonite, calamine, and hydrozincite. Such deposits are often more valuable than the primary sulphides, both for the reason that they are more concentrated and that their metallurgical treatment is simpler.

Production in the United States is shown in Table 66; world production in Table 67.

Table 66. Zinc production of the United States (thousands of short tons) (*MY*)

	1918 *b*	1919 *b*	1921 *b*	1929	1932	1936	1937	1938
Oklahoma	161.4	178.4	121.4	192.0	63.4	125.1	135.7	115.5
New Jersey	99.5	92.9	56.4	103.7	81.5	94.0	101.4	88.4
Kansas	30.2	47.6	37.0	109.8	26.3	78.8	80.3	67.2
Tennessee and Virginia	22.0	23.7	9.7 *c*	40.6	18.5	47.6	55.8	55.1
Idaho	22.6	8.0	*d*	45.7	10.3	46.2	54.2	43.5
Utah	9.2	2.2	*d*	51.5	29.7	34.2	48.0	34.2
New York	3.8	5.1	1.6	10.2	16.8	28.0	32.8	27.0
New Mexico	12.0	3.8	0.1	34.5	25.6	20.8	23.9	26.0
Washington	*d*	*d*	*d*	*d*	*d*	4.3	4.1	11.4
Missouri	56.0	31.5	10.8	11.0	1.0	18.7	20.6	11.1
Nevada	8.4	4.5	*d*	8.5	0.1	15.8	14.2	9.5
Montana	104.6	84.4	11.6	68.2	2.2	49.4	39.2	7.7
Arizona	1.1	0.9	*d*	1.2	.....	4.0	5.0	5.3
Wisconsin	50.0	40.8	3.4	17.0	7.5	7.7	6.9	2.0
Others *a*	.....	.....	4.6	30.5	2.4	1.6	4.8	5.1
Total	632.2	556.9	256.7	724.5	285.2	576.2	626.4	508.9

a Includes Ark., Calif., Colo., Ky., Ore., Ill., Ky.
b *USGS*.
c Tenn. only.
d Included in others.

Table 67. World production of zinc (thousands of metric tons) *a*

	1913	1918	1919	1921	1929	1932	1936	1937	1938
United States	313.5	469.9	422.5	181.9	573.0	193.7	474.6	540.1	422.3
Belgium	196.7	9.2	19.9	66.2	197.9	96.3	197.7	225.6	210.0
Germany	281.5	236.0	148.0 *c*	27.1	102.0	42.0	136.4	163.3	192.5
Canada	.....	11.1	11.2	24.0	78.0	78.2	135.3	137.6	143.9
Poland	16.0	4.9	4.4	70.0	169.0	85.0	95.4	109.3	110.8
U.S.S.R.	.....	.....	.....	.....	3.4	13.7	66.0	70.0	80.0
Australia	3.7	5.7	3.6	nil	50.8	53.7	70.6	70.9	70.9
France	64.4	18.3	10.8	30.0	91.6	49.3	53.6	60.4	62.2
United Kingdom	59.2	50.0	35.0	5.9	59.2	27.3	61.8	63.1	56.2
Japan	.....	39.8	19.8	10.4	22.1	27.0	39.3	45.5	50.0
Norway	9.8	1.9	3.4	2.0	5.5	39.4	45.0	41.3	46.5
Mexico	.....	.....	.....	.....	27.2	30.3	32.2	36.6	37.5
Italy	.....	1.2	1.3	0.4	15.8	17.6	27.0	38.0	34.1
Netherlands	24.3	0.7	.....	6.4	25.7	15.6	15.4	24.6	25.3
Rhodesia	.....	.....	.....	.....	12.3	.....	21.1	14.3	10.4
Others *b*	30.1	24.0	26.5	19.0	39.1	20.9	23.4	21.0	28.9
Total	999.3	875.2	706.4	443.2	1,472.8	789.9	1,497.1	1,667.9	1,589.3

a *ABMS*, unallocated as to source of ore.
b Includes Czechoslovakia, Yugoslavia, Spain, Indo-China, Sweden, Austria, China, Tasmania.
c Includes Upper Silesia.

Selling. See Art. 50. New York PRICES for Prime Western zinc averaged 8.35¢ per lb. for the 10-year period 1913–1922; 6.14¢, 1923–1932; and 5.95¢, 1933–1942. Yearly averages: 1929, 6.84¢; 1932, 3.25¢; 1937, 6.87¢; 1938, 4.99¢. St. Louis prices average 0.4 to 0.6¢ below New York. Yearly average Joplin prices for zinc concentrates (Art. 50) were: $42.39 per short ton in 1929; 1932, $17.83; 1937, $39.87; 1938, $27.83.

Treatment of lead and zinc ores. The coarsely disseminated ores of lead, lead-silver, and lead-zinc, with gangue of average specific gravity (2.6 to 2.8), yield important quantities of high-grade lead concentrate by gravity concentration on jigs and/or tables, while flotation is used to recover the balance of the metallic values and, when necessary, to separate galena from sphalerite. Coarsely disseminated sphalerite ore is similarly treated, except that in one plant (AMERICAN ZINC Co.) tailing is roughed out at sizes up to 1 1/2-in. by sink-float treatment, and zinc is roughed out of the resultant middling by jigs, before flotation is applied to scavenge the fine sphalerite With heavy gangues zinc

minerals cannot be separated successfully by gravity methods. Sulphide ores of medium and fine dissemination, whether simple or complex, are first ground to flotation size (say 35 to 48 *mog* or as much finer as is necessary to free the sulphides), and are then floated by differential methods. Copper sulphides are ordinarily permitted to go with the lead, and pyrite is also, if it carries precious metals. Oxidized lead ores yield much better recoveries by gravity concentration than by flotation, provided the lead minerals free at sand sizes, hence gravity concentration is an important element in such flowsheets; oxidized zinc ores are so diverse in mineralogical composition that generalization as to treatment methods is not justified.

A typical lead, zinc, or lead-zinc flowsheet for coarsely disseminated ores (excluding such ores as AMERICAN ZINC) comprises in order, crushing, gravity concentration, grinding and flotation. Crushing is usually three-stage, with jaw or gyratory for the primary, reduction gyratory or standard cone for the secondary, and short-head cone or rolls in closed circuit for the final stage to gravity-concentration feed size. Gravity concentration employs jigs and/or tables; the feed is usually long-range, preparation involving only desliming, to prevent dilution. Grinding is one-stage with the simple ores, two-stage with complex ores, the second stage usually being a middling regrind. Flotation is normally two-stage rougher-scavenger flow on the primary run for each sulphide; cleanings range from one to four. Ores of medium dissemination normally have two-stage crushing and two-stage grinding (one of which may be middling regrind); flotation tends toward more stages in roughing (prolonged rather than intense treatment) and averages less cleaning steps, probably because of relatively higher grade rougher concentrate and because the possibilities of extremely high grade concentrate do not, in general, justify the attempt to produce it. For finely disseminated ores up to four-stage crushing and four-stage grinding (one middling regrind) are practiced; flotation tends toward two-stage roughing and two cleaning steps on each metal.

For treatment of highly complex ores containing gold and silver see Art. 22.

Products. Assays and recoveries at a number of mills are given in Table 68. Gravity galena concentrate assays, in general, from 75 to 80% Pb; flotation concentrate at PEND

Table 68. Assays and recoveries at lead and zinc mills

Mill	Assays, per cent.				Recovery, per cent.		
	Concentrate		Tailing				
	Pb	Zn	Pb	Zn	Pb	Ag	Zn
North Broken Hill *a*	74.6	52	0.6	1.5	96	88	86
Broken Hill South *a*	76	53.2	0.65	1.2	95	90	89
St. Joseph Lead Co., Bonne Terre *a*	76.3	.....	0.11 *b* 0.14–0.18	.....	92	.....	.....
Bunker Hill & Sullivan	60	52	0.74	0.90	90	92	78
Pend Oreille	80	63.8	0.18	0.40	98.9	.....	91.2
Cia. Industrial El Potosi	65.2	48	0.17	1.99	98.2	92	80.2
Compania Minera de Penoles	64.6	59.3	0.3	1.3	97.4	92	87.2
Eagle-Picher Lead Co., Montana Mines	42.2	55.4	0.07	0.44	93.5	82.7	71.6
Consolidated Mining & Smelting Co.	69.5	50.7	.....	.....	85	.....	84.5
Mount Isa	39.1	52.7	1.8	4.1	83.5	79.8	49.9
American Zinc Co	.....	61.5	.....	0.22	.....	.....	93.3
New Jersey Zinc Co	.....	17 *c* 47 *d*	.....	1.25	.....	.....	98
White Bird *a*	74	60	.....	1.3 *b* 0.6	85.6	.....	84.3
Page *a*	70.8	51.3	.....	.....	91.5	89	55
Federal M. & S. Co., Morning mill	74.2	56	0.67	0.38	91	81	86
St. Joseph Lead Co., Hughesville, Mont.	61	51.2	0.31	0.34	95.5	54	80.8
Tybo	59.9	51.2	.....	.....	71.3	65.4	80.7
Chief Consolidated Mfg. Co	33.4	.....	1.3	1.4	92.1	77.2	.....
Black Hawk Consol	58.3	54.8	0.2	2.5	81.9	62.9	90.6
American Metal Co., Pecos mill	37.8	54.4	0.76	1.33	82	63.4	84.6
St. Joseph Lead Co., Balmat	61.7	56.1	0.59	2.2	64	.....	90.3
San Francisco Mines, sulphide	52.2	55.2	1.5	2.0	86	77	23
Hecla Mining Co	60.8	52.0	0.54	0.13	97	96	28
Trepca Mines	79.9	50.1	.....	0.4	95.8	89.8	91.6
Zinc Corporation	77	53.5	0.55	1.1	96.6	93.0	86

a Part gravity lead. *b* Gravity. *c* Franklinite. *d* Willemite-zincite.

OREILLE and TREPCA runs as high as 80% lead, but this is unique; flotation lead from coarsely disseminated ores such as BROKEN HILL and S. E. MISSOURI ranges in assay from 70 to 75%, but the more usual range for medium and fine disseminations is 60 to 65%. Gravity galena sand tailing at BONNE TERRE, with coarse dissemination, assays 0.11% Pb; with medium dissemination and relatively fine grinding (65 *mog*) flotation tailing of 0.15 to 0.3% is usual; coarser grinding (35 *mog*) even with coarsely disseminated ores runs lead flotation tailing up to 0.6 to 0.8% Pb; with very finely disseminated ore and consequent over-long time for oxidation and other interfering surface reactions to occur, tailing rises to 1.5 to 1.8% (MOUNT ISA). Lead recoveries of 95 to 98% are not uncommon, even with relatively high tailing, on account of the fact that feed assays run, normally, in the range of 3 to 10%; recoveries as low as the upper 80's are unusual.

Assays of zinc concentrate, substantially all flotation, cluster in the fifties, with the majority below 55% Zn. Tailing below 0.5% is unusual; at the majority of mills the range is between 1.0 and 1.5%, and where grade of concentrate is important, *i.e.*, where the distance to the smelter is great, tailing of 2 to 4% is made. Recoveries cluster in the range from 80 to 90%; higher figures correspond to special circumstances, such as that zinc is the only metal recovered (NEW JERSEY ZINC, AMERICAN ZINC), company smelters (TREPCA, N. J. ZINC), and the like. Silver recovery in lead concentrate normally follows lead recovery but tends to run 5 to 10% lower; it may fall much lower, if any considerable part of the silver minerals is associated with sphalerite rather than galena.

Power consumption at lead and zinc mills varies widely, from about 13.5 hp-hr. per ton milled at AMERICAN ZINC and 16.5 at WHITE BIRD, both simple zinc mills, to about 20 at BONNE TERRE and BROKEN HILL, milling simple lead and coarsely disseminated lead-zinc ores, to upward of 40 at MT. ISA, where the ore is very finely disseminated. In general, for a given type of mill, power consumption is higher the lower the daily tonnage. Power for crushing ranges from about 2 hp-hr. per ton for one-stage to 5 to 6 for 3-stage. Grinding consumes about 5 hp-hr. per ton for one-stage work on coarsely disseminated ores, following fine crushing, and when flotation is practiced at 35~48-m. maximum; the figure for normal 65-m. grinding following 2-stage crushing is from 10 to 15 hp-hr. per ton, and for 3-stage work to 80 or 85% <200-m. is upward of 20 to 25 hp-hr. per ton. Jigging and tabling combined consume between 1 and 2 hp-hr. per ton; flotation consumes between 5 and 10 hp-hr. for simple ores and 10 to 15 for complex ores requiring repeated cleaning.

Labor. Average of 17 plants is 25 tons per man-shift, with a range from 10 to 46, the higher figures corresponding to the larger plants; at 25% of the plants reported the figure lies between 20 and 25 and the median likewise falls in this range. Averages reported to the Bureau of Mines and published (*IC 6776*) without detail show 33 tons per man-shift for 14 mills producing lead as the principal metal, 13 tons for mills where zinc was the principal metal, and 21.4 tons for 83 zinc-lead plants.

Costs of milling range from about $0.50 per ton for simple lead or zinc ores to $1.50 per ton for small plants treating not too complex lead-silver-zinc ores. At the larger plants treating complex ores, costs cluster between $1.00 and $1.25 per ton milled.

St. Joseph Lead Co., Bonne Terre mill. Fig. 100 (*Q*; L. A. Delano, Mill Sup't; *138 J 286; IC 6658; 153 A 603*).

Location: Bonne Terre, Mo.

Ore: Galena in dolomite, with small amounts of sandstone and shale. Galena distribution is indicated by Table 69. Some of the galena is very finely disseminated.

Capacity: 2,400 tons per 24 hr.

Assays: Feed, 2.9% Pb; concentrates: gravity (about 52% by weight), 78.75% Pb; flotation, 73%; combined, 76.34%; tailing: gravity, 0.11%; flotation, 0.14 to 0.18%.

Recovery: 92%.

Ratio of concentration: 29 : 1.

Water from mine drainage and surface rainfall collected in a lake about 1/2 mi. from mill, whence there is gravity flow by pipe; power for supply, 1.8 hp-hr. per ton; CONSUMPTION: 2.12 tons net per ton of ore, 72% reclaimed in circulation, 7.5 tons per ton milled.

Power purchased; comes 7 mi. from main substation at 6,600 volts; motors 220- and 440-volt 60-cycle; CONSUMPTION, 19.6 hp-hr. per ton of ore milled, of which dry crushing is 34%; grinding, 20.6; tabling, 2.7; flotation, 16.6; concentrate disposal, 2.0; tailing disposal, 12.7; water supply, 8.7; lighting, 2.7%.

Labor: American; 95 tons per man-shift operating; 92 tons per man-shift on repairs.

Running time: 98.6%; principal cause of loss, mechanical trouble.

Mill building: Level site; wood, steel, and concrete; concrete floors in basement and main floor, wood above, all level. Heated by natural-gas Mogul stoves.

Machinery handling: Air hoist and crawl on lifting frame in primary crushing; chain blocks and crawl on I-beam over secondary crushers; electric hoist on lifting frame for rolls; chain blocks on coffin hoists for rod mills; manual labor and coffin hoists in concentration section.

Transportation distances: Mill at mine; 100 mi. mill to smelter; railroad at plant.

Tailing disposal: Combined tailing pumped 1 mi. to pond.

Table 69. Sizing-specific gravity-assay test of a Lead-Belt ore (*After IC 6658*)

Mesh	Float on 2.85 specific gravity			2.85 to 2.90 specific gravity			2.90 to 2.95 specific gravity		
	Weight	Assay, lead	Distribution of lead	Weight	Assay, lead	Distribution of lead	Weight	Assay, lead	Distribution of lead
4	7.5	0.36	0.57	1.1	0.35	0.08	0.5	1.07	0.11
6	15.3	0.18	0.58	2.1	0.15	0.07	0.9	1.07	0.20
8	10.8	0.16	0.37	1.6	0.14	0.05	0.6	0.76	0.10
10	7.3	0.16	0.25	2.1	0.09	0.04	0.4	0.59	0.06
14	5.5	0.09	0.10	1.3	0.09	0.03	0.4	0.36	0.03
20	3.3	0.07	0.05	1.1	0.08	0.02	0.4	0.25	0.02
28	2.4	0.07	0.04	0.9	0.07	0.01	0.4	0.25	0.02
35	1.8	0.06	0.02	0.9	0.06	0.01	0.3	0.14	0.01
48	1.6	0.05	0.02	0.8	0.05	0.01	0.3	0.13	0.01
65	0.9	0.05	0.01	0.8	0.05	0.01	0.2	0.09	0.00
100	0.8	0.05	0.01	1.0	0.05	0.01	0.2	0.08	0.00
<100	.....	.....	.....	.....	.....	.....	.....	.....	.....
Total	57.2	0.17	2.02	13.6	0.11	0.34	4.7	0.57	0.56

Mesh	2.95 to 3.34 specific gravity			Sink in 3.34 specific gravity			Total		
	Weight	Assay, lead	Distribution of lead	Weight	Assay, lead	Distribution of lead	Weight	Assay, lead	Distribution of lead
4	0.6	7.74	0.86	0.2	19.10	0.95	9.9	1.23	2.57
6	1.2	7.64	2.00	0.7	45.46	6.80	20.2	2.25	9.65
8	0.7	6.86	1.03	0.8	54.93	8.83	14.5	3.38	10.38
10	0.5	6.74	0.68	0.8	59.32	10.49	11.2	4.86	11.52
14	0.3	5.98	0.38	0.7	60.50	8.98	8.2	5.48	9.52
20	0.2	5.06	0.16	0.5	60.84	5.97	5.4	5.41	6.22
28	0.1	4.90	0.10	0.5	64.39	6.95	4.4	7.71	7.12
35	0.1	4.68	0.06	0.4	64.05	5.81	3.4	8.20	5.91
48	0.1	4.60	0.05	0.4	61.52	4.88	3.2	7.38	4.97
65	0.03	3.30	0.02	0.3	64.39	4.28	2.3	8.91	4.32
100	0.03	2.50	0.02	0.4	65.57	4.89	2.4	9.82	4.93
<100	.....	.....	.....	.....	.....	22.89 *a*	15.0	7.20	22.89
Total	3.8	6.92	5.36	5.7	57.21	91.72	100.0	4.72	100.00

a All the lead in the <100-m. product is assumed to be free.

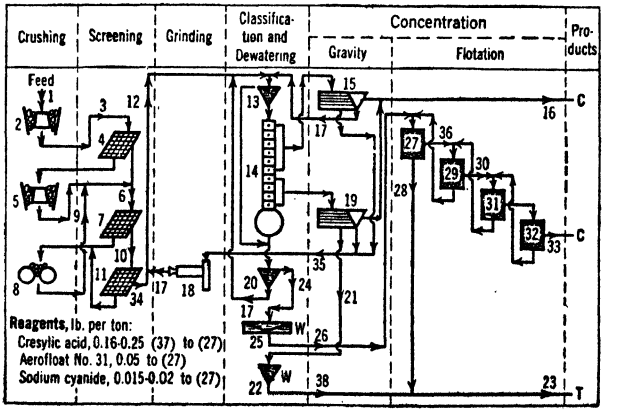

FIG. 100. ST. JOSEPH LEAD CO., Bonne Terre mill.

Legend for Fig. 100:

1. Direct from 2 3/4-ton mine skips. 60 skips per hr. max.
2. 1 @ 18-in. gyratory crusher, 2 3/8-in. open setting; concaves centered on eccentric center to produce finer product and compensate for one-side feeding. Mantle and concaves maintained by electric welding with hard-facing rods.
3. Conveyor No. 1(*a*); 36-in. suspended magnet over head pulley.
4. 1 @ 4×7-ft. 2-deck vibrating screen; upper deck 2×2-in. woven 3/8-in. rod for upper 4 ft., balance blank plate; lower deck 1 1/4×1 1/4-in. aperture, 3/16-in. wire; 860 r.p.m., 25° slope, 10-hp. motor, 4.2 kw. consumed.
5. 3 gyratory crushers, 2 operating full time, one about 30% full time; product about 5% >1-in., 50% <1/2-in.
6. Conveyor No. 2 with weightometer; 90-ton surge bin; conveyors 3, 4, and 5(*a*). Adjustable scrapers from conveyor No. 5 distribute feed to screens (7).
7. 12 @ 33×84-in. St. Joe-type vibrating screens, 0.095-in. square opening, 37° slope, 1,600 v.p.m., 3/16-in. drop on vibrator cams; 2 screens per 3-hp. motor.
8. 2 @ 54×24-in. rolls, set 1/16-in., one roll only driven, 73.4 r.p.m., 150-hp. motors; shells hard-faced by electric welding and similarly repaired. Circulating load 500 to 600%. Product of circuit about 90% <14-m.
9. Return is to conveyor No. 4(*a*).
10. Conveyors 6 and 7(*a*); sampler; conveyor No. 8.
11. 1 @ 3×5-ft. scalping screen, 0.0364-in. sq. aperture, 800 s.p.m., 12° slope.
12. Conveyor No. 9, *a* distributes by adjustable scrapers to mill bins; three sections from this point on; capacity ranges from 800 to 1,200 tons per section per 24 hr., with tailing increasing somewhat with increase in tonnage; notes following refer to one section; screw-controlled arc gate; 1 @ 24×38-in. pan-type apron feeder with 2-hp. motor pump No. 1(*b*).
13. 1 @ 80-in. Delano hydraulic deslimer, overflow, 11% solids.
14. 1 @ 19-spigot St. Joe hydraulic classifier, spigots 7/8- to 5/8-in. diam. See Table 70 for screen analyses and spigot distributions.
15. 4 shaking tables. 5/32-in. rubber covers and molded-rubber riffles, life 10 to 15 yr.
16. Dewatering drag; 4×1 1/2-ft. filter.
17. Pump No. 2(*b*).

Table 70. Classifier products and table feeds at Bonne Terre mill

Spigot No.	1	2	3	4	5	6	7	8	9	10
Spigot diam., in.	7/8	13/16	3/4	3/4	3/4	3/4	3/4	3/4	3/4	3/4
To table No.	1	1	2	2	2	3	3	3	4	4
Mesh	Per cent. weight									
10	3.9	3.0	2.4	1.6	.....	.....	.....	.....	.....	.....
14	19.7	16.9	17.6	15.1	14.5	18.3	9.3	9.2	7.4	5.8
20	23.9	21.3	24.0	23.8	22.8	27.0	19.1	18.5	16.9	15.1
28	26.0	25.8	25.7	27.7	30.1	29.8	31.5	31.8	30.8	30.5
35	12.6	13.6	13.3	14.0	15.2	12.5	18.0	20.1	21.8	23.4
48	7.7	9.1	8.9	8.9	9.1	7.3	11.9	12.0	13.6	15.7
65	3.5	5.0	4.2	4.7	4.3	2.8	5.7	5.2	6.0	5.8
100	1.5	2.5	2.1	2.1	1.8	1.4	2.6	1.9	2.2	2.2
150	0.4	0.8	0.7	0.8	0.7	0.3	0.8	0.5	0.5	0.6
200	0.2	0.6	0.2	0.3	0.4	0.3	0.3	0.3	0.3	0.3
<200	0.6	1.4	0.9	1.0	1.1	0.3	0.8	0.5	0.5	0.6
Spigot No.	11	12	13	14	15	16	17	18	19	20
Spigot diam., in.	3/4	3/4	3/4	3/4	5/8	5/8	5/8	5/8	5/8	5/8
To table No.	4	5	6	7	8	9	10	11	12	13
Mesh	Per cent. weight									
10	.....	.....	.....	.....	.....	.....	.....	.....	.....	.....
14	2.0	0.7	.....	.....	.....	.....	.....	.....	.....	.....
20	8.8	5.3	2.4	0.9	.....	.....	.....	.....	.....	.....
28	27.5	25.7	17.4	6.8	8.2	.....	.....	.....	.....	.....
35	28.2	30.4	27.5	16.3	17.1	3.6	6.3	3.9	2.2	7.8
48	21.5	24.0	30.9	35.6	33.5	22.0	20.7	19.2	14.2	17.8
65	8.0	9.6	15.4	29.7	31.8	51.3	44.4	51.2	48.7	36.9
100	2.4	2.6	4.3	7.7	7.7	18.5	23.8	22.2	29.2	31.2
150	0.8	0.7	0.9	1.5	0.9	2.6	3.2	2.0	3.5	4.1
200	0.4	0.3	0.3	0.6	0.4	1.0	0.8	0.5	0.4	1.2
<200	0.4	0.7	0.9	0.9	0.4	1.0	0.8	1.0	1.8	1.2

a See Table 71. *b* See Table 72.

Legend for Fig. 100—Continued:

18. 1 @ 6 (diam.) × 4 1/2-ft. trunnion-type rod mill, 1 3/4-in. rods, 2-in. smooth liner, 30 to 40% solids.
19. 8 shaking tables (see 15). Number of tables sending tailing to regrind (item 15) or to waste changes with tailing assay.
20. Sand trap.
21. Pump No. 3 (*b*).
22. 1 @ 72-in. Delano hydraulic deslimer.
23. 2 pumps Nos. 4 and 5 (*b*) in series; 1% >14-m., 29% <200-m.
24. Combined from three sections.
25. 7 @ 6 × 50-ft. thickeners, underflow 32 to 35% solids; 2.7% >65-m., 58.9% <200-m.
26. Pump No. 6 (*b*); 1 @ 10 (diam.) × 6 1/2-ft. surge tank; 1 @ 7-way distributor.
27. 7 @ 3 × 36-ft. St. Joe pneumatic flotation cells in parallel, 4,000 cu. ft. per min., 3/4 lb. per sq. in., 18 hp., for 1 @ 36-ft. rougher and 1 @ 12-ft. cleaner (29); 24% solids; *p*H @ 8.3.

Table 71. Conveyors at Bonne Terre mill

No.	Width, in.	Length, ft.	Slope, deg.	Speed, f.p.m.	Tons per hr.	Motor, hp.
1	24	354	20	393	105	25
2	24	205	17	340	105	10
3	24	52	0	276	105	3
4	30	182	20	565	645	40
5	30	235	20	522	645	50
6	24	79	0	504	105	5
7	24	88	20	458	105	10
8	22	163	22	350	105	10
9	22	245	0	275	105	10

28. Pump No. 7 (*b*).
29. 7 @ 3 × 12-ft. St. Joe pneumatic flotation cells in parallel; overflow, 60 to 64% Pb; tailing, 4.5% Pb.
30. Pump No. 8 (*b*).
31. 2 @ 12-ft. St. Joe machines in series.
32. As (31). Overflow 74 to 77% Pb; tailing, 18% Pb.
33. 1 @ 50-ft. thickener, spigot, 75% solids; 1 @ 11 1/2 × 12-ft. drum filter, cake 12 to 14% moisture; 1 rotary drier, discharge 5.5 to 7% moisture, capacity 5,000 to 11,000 lb. per hr.
34. 94% <14-m.
35. Dewatered by shovel wheel.
36. 15 to 18% Pb.
37. More needed in summer than in winter. Recently some of the St. Joseph mills have substituted isopropyl xanthate for Aerofloat; some are adding a small amount of Na_2S to counteract superficial oxidation; others are using a mixture of hardwood creosote (75 parts) and amyl alcohol (25 parts) as frother rather than cresylic acid.
38. 2% >14-m., 1.5% <150-m.

Table 72. Pumps at Bonne Terre mill

No.	Item	Size, in.	Speed, r.p.m.	Tons solid per 24 hr.	Per cent. solid	Intake pipe		Head, ft.	Discharge line			Motor, hp.
						Diam., in.	Length, ft.		Diam., in.	Lift, ft.	Length, ft.	
1	12	6	865	1,350	26.5	8	5	2.5	6	48	54	35
2	17	4	1,160	900	30	6	5	2.5	6	48	54	25
3	21	4	1,160	580	25	6	2.5	3	5 1/2	45	200	30
4	23	6	1,160	2,300	32	8	12	5.5	.....	.....	.....	75
5	23	6	875	2,300	32	8	5	.....	8	50	4,000–6,000	75
6	26	6	850	1,400	24	8	3	3.5	6	30	70	50
7	28	4	850	1,142	30	8	4	3.5	6	15	300	10
8	30	3	1,120	50	5.7	6	1.5	4.5	3	27	65	10

Summary. Three-stage crushing run-of-mine to 0.1-in.; classification and tabling of sands with regrind of coarse tailing and fine middling in closed circuit with hydraulic classifiers and tables, and rejection of fine table tailing; flotation at 65-m. with triple cleaning. Flotation tailing is lowered by gravity removal of coarse galena.

This plant is typical of practice in the S. E. Missouri district. Gravity concentration pays its way by rejecting a fine sand tailing that is of lower grade than flotation makes, and by taking out approximately 50% of the total lead recovery as a high-grade concentrate without the loss that inevitably attends comminution of sulphides.

Hong Kong Mines, Ltd. Fig. 101 (*Tref 11/38*).

Location: Near Hong Kong, China.
Ore: Silver-bearing galena, 10 to 12% Pb, 1.5 to 3 oz. Ag, with a little sphalerite, in a siliceous gangue which is not particularly hard.
Capacity: 150 t.p.d.
Concentrate assay: 71% Pb and 17 oz. Ag.
Recovery: 95% Pb, 85% Ag.

b See Table 72.

Summary. One-stage open-circuit crushing to 1 1/2-in.; one-stage closed-circuit grinding to 65 *mog;* all-flotation concentration by a modified rougher-cleaner routing.

Legend for Fig. 101:

1. Jaw crusher.
1a. 100-ft. sorting belt, some waste removed; 525-ton bin.
2. 1 @ 6×6-ft. ball mill.
3. 1 @ 6-ft. classifier.
4. 1 @ 10-cell Denver Sub-A flotation machine: *a* = cells 5, 6; *b* = cells 7 to 10; *c* = cell 1; *d* = cell 2; *e* = cells 3, 4.

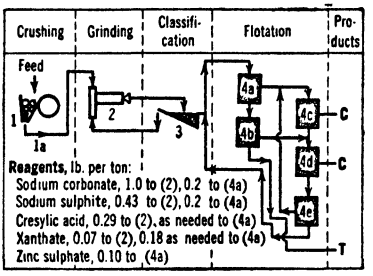

FIG. 101. HONG KONG MINES.

This plant has substantially the same problem as BONNE TERRE except that the tonnage is too small to justify the added complexity of a gravity section, and the silver content lessens somewhat the necessity for maximum grade of concentrate. The higher figure for lead recovery is an arithmetic result of higher-grade feed.

American Zinc Co. of Tennessee, Fig. 102 (*Q* by C. B. Strachan, Gen'l Sup't; *IC 6379; 139 #8 J 49; 141 #7 J 35*).

Location: Mascot, Tenn.
Ore: Blende, 5%; pyrite, 1%; galena, trace; greenockite, 0.5%; quartz, 8%, balance dolomite.
Capacity: 3,500 tons per 24 hr.
Assays: Feed, 2.9% Zn; concentrate, 62.7% Zn, 0.55% Fe, 0.09% Pb, 1.7% CaO; tailing, 0.225% Zn.
Recovery: 93.3%.
Ratio of concentration: 21.2 : 1.
Power: Purchased; comes 20 mi. at 66,000 volts; motors, 2,300- and 440-volt, 60-cycle; CONSUMPTION, 13.4 hp-hr. per ton milled.
Water: Source is a dam in Flat Creek, 2 mi. distant. Comes to mill by gravity through a ditch line. In process, 7.9 tons per ton of ore; reclaimed, 67%.
Labor: 38 tons per man-shift, operating plus maintenance.
Running time: 98% on 6-day-week basis.
Mill building: Level site. Steel and concrete with zinc-coated sheet roof and sheathing. Unheated.
Machinery handling: Power cranes in crushing section; hand cranes and chain blocks in concentrating mill.
Tailing disposal: All coarse and fine sand tailing sold. Slime to dam near mill.
Distances: Mines to mill: 2,000 ft. by aerial tram; 15 mi. by standard-gage railroad. Concentrate shipped 400 mi. by rail; dried to 0.1% moisture.

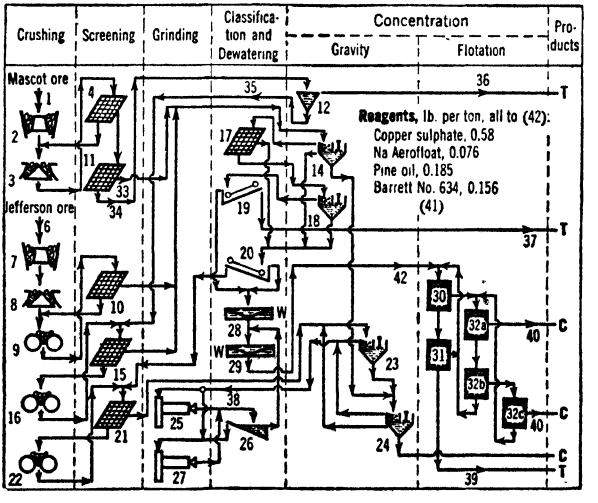

FIG. 102. AMERICAN ZINC CO. OF TENNESSEE.

Legend for Fig. 102:

1. At mine, 40-ton surge bin in head frame; Ross chain feeder; 1 @ 48-in. belt conveyor; 80% of total mill feed.
2. 1 @ 30-in. gyratory, 3 1/2-in. set, 147 r.p.m., 55 hp. actual, 75-hp. motor.
3. 1 @ 4-ft. cone crusher, 1 3/4-in. set.
4. 1 @ 5×14-ft. Niagara screen, 1 1/2-in. sq. aperture.
5. 1 @ 54×20-in. Garfield rolls, 80 r.p.m.
6. By standard-gage cars, 150-ton track bin, with Ross chain feeder; 1 @ 48-in. belt conveyor; capacity, 110 tons per hr.; 20% of total mill feed.
7. 1 @ 26-in. gyratory crusher, 3-in. set.
8. 1 @ 4-ft. Symons cone, 1 1/2-in. set.
9. 1 @ 54×20-in. Garfield rolls.
10. 1 @ 4×10-ft. A-C vibrating screen, 1/2-in. round holes.
11. 2 low-head type A-C screens, 3/8-in. round aperture.
12. Sink-float plant, 1 @ 9-ft. cone (see Sec. 11, Art. 28). Galena medium. Cone densities 2.80 top, 2.95 bottom.
13. 1 @ 2,000-ton bin.
14. 3 @ 32×48-in. 6-cell Cooley-type rougher jigs in parallel, 108 @ 1 1/2 to 1 5/16-in. s.p.m., punched-plate slotted screens with 1/8×1-in. slots.
15. Vibrating screen, 1/2-in. round aperture.
16. Rolls.
17. 3 stationary dewatering screens, slope 45°; punched plate, 1/8×1-in. slots.
18. 3 @ 36×48-in. 3-cell Cooley-type bull jigs in parallel, 1/2-in. round-hole screens, 90 @ 2 3/16 to 1 5/8-in. s.p.m.
19. 1 @ 22-in.×66-ft. drag belt, 90 f.p.m.
20. 2 @ 22-in.×24-ft. drag belts in parallel, 90 f.p.m.
21. 1 @ 4×5-ft. Hum-mer screen, 3-m. #9 cloth.
22. 1 @ 43 1/2×16-in. Garfield rolls, manganese-steel shells, 95 r.p.m.
23. 2 @ 28×42-in. 4-cell Cooley-type sand jigs in parallel; 1/8×1-in. slotted punched plates; 200 @ 5/8 to 7/16-in. s.p.m.
24. 1 @ 28×42-in. 5-cell Cooley-type cleaner jig, 3/32×3/4-in. slotted plates, 211 @ 9/16 to 7/16-in. s.p.m.
25. 1 @ 7×10-ft. rod mill, 65,000 lb. 3-in. rods, 16 1/2 r.p.m.
26. 1 @ heavy-duty rake classifier.
27. 1 @ 7×12-ft. ball mill.
28. 4 @ 30-ft., 1 @ 36-ft., 1 @ 50-ft. thickeners in parallel, 3 min. per rev.; spigot density, 20% solids, overflow to mill water supply.
29. 4 @ 30×10-ft. thickeners, 3.75 min. per rev.; spigot density, 50% solids; overflow to waste.
30. 2 @ 2-spitz and 1 @ 1-spitz Janney rougher cells in series, 600 r.p.m., 5-min. time-factor, concentrate 55% Zn.
31. 5 @ 1-spitz Janney cells in series.
32. 1 @ 4-cell Denver Sub-A machine, cell 2 = *a*, cells 3 to 4 = *b*, cell 1 = *c*; hard-rubber impellers, life 416 da.; hard-iron liner, life 730 da.; 15-min. time-factor; tailing, 20% Zn.
33. 24% of Mascot mine feed.
34. 56% of Mascot mine feed.
35. 11% of Mascot mine feed.
36. 52 to 63% of Mascot mine feed; assay 0.33% Zn.
37. 15% of Mascot mine feed.
38. 30% of Mascot mine feed.
39. 35% of Mascot mine feed; 0.1% Zn.
40. 97% recovery on flotation feed.
41. Further small additions of pine oil and Aerofloat to rougher cell No. 2; of Aerofloat and $CuSO_4$ to rougher cell No. 6, and of pine oil and Aerofloat to the first cleaner cell.
42. 3 Janney-cell agitators in series, 600 r.p.m., 2-min. time-factor, 40% solids, *p*H 8.4.

Summary. Three-stage crushing to <1 1/4-in. 1 1/4~3/8-in. roughed in sink-float cone with discard of 49% as tailing assaying 0.4% zinc. Sink concentrate crushed through 1/2-in. in one-stage closed-circuit rolls. All <1/2-in. material jigged in a rougher-cleaner circuit with recrushing of coarse middling to 3-m.; 15% discarded as tailing. Jig middling reground to 35 *mog* and floated, with 2 cleanings of concentrate.

This plant is unique in that the relatively coarse and extremely nonuniform dissemination of the sphalerite causes a comparatively low grade tailing to be freed at 1 1/2-in. size, while an active local market for crushed limestone yields a credit against values discarded in coarse tailing that turns such discard into profit.

Wisconsin-Illinois zinc deposits are small and scattered both geographically and in ownership. Central milling of crude ore has not developed. Hence the mills are, of necessity, small and crude. The practice of the district is to erect a small mill at the pit mouth, rough the ore by gravity concentration, in most cases on one or two jigs, and sell concentrate to central cleaning mills. In the past these have been roasting-magnetic mills such as the mill of the National Separating Co. (Fig. 105). The Vinegar Hill Zinc Co.

has built a flotation plant to treat its own and custom rough concentrate, but the present roasting plants are not fitted to handle large tonnages of fine concentrate, so, despite that sulphuric acid is one of the profitable products, marcasite concentrate is not salable.

One-jig mills. Fig. 103 (*95 J 785; 59 A 117*).

Ore: Galena, sphalerite, marcasite, and pyrite in gangue of dolomite, calcite, and barite.
Capacity: 100 to 150 tons per 10 hr.
General: This type of mill is applicable only to low-grade coarsely disseminated ores having a high iron-zinc ratio and not much lead. With such ores much of the lead is recovered in a salable concentrate, and from 60 to 80% of the zinc in a zinc-iron concentrate assaying 20 to 40 or 45% Zn. This product is sold to the plants with magnetic separators. (See NATIONAL ZINC SEPARATING Co., Fig. 105.) If lead content of feed is relatively high, too much lead goes into the zinc concentrate and a 2-jig mill (p. 162) must be used.

Legend for Fig. 103:

1. Bin.
2. 1 @ 14-in. jaw crusher.
3. 1 @ 24-in. rolls.
4. 1 @ 14-in. bucket elevator.
5. 1 @ 3×6-ft. trommel, 0.5-in. opening.
6. 1 @ 24-in. rolls.
7. 1 @ 30×36-in. 7- to 9-cell Cooley-type jig, 200 r.p.m.; concentrate drawn continuously from hutches and shoveled from sieves at the discretion of the operator.
8. Desliming box; sand to an elevator to tailing pile (Sec. 20, Art. 3); slime to pond.
9. To a custom mill, *e.g.*, Fig. 104, flotation section; or Fig. 105.

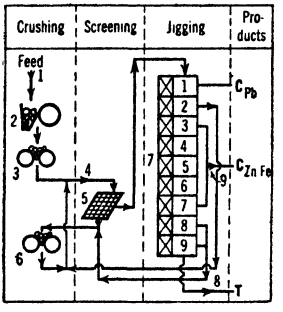

FIG. 103. One-jig zinc mill.

Dodgeville Mining Co. Fig. 104 (*Tref 9/42*).

Location: Dodgeville, Wis.
Ore: Galena, sphalerite, marcasite, and pyrite in a gangue of dolomite, calcite, and barite.
Capacity: 190 tons per 24 hr.
Assays: See Table 73.
Recovery: See Table 73.
Ratio of concentration: Gravity lead, 160 : 1; flotation lead, 56 : 1; zinc, 3 : 1.
Power: Purchased; 3-phase, 60-cycle, 220-volt.
Water: From mine.

Legend for Fig. 104:

1. 100-ton bin from skips.
2. 1 @ 9×16-in. jaw crusher.
3. 1 @ 30×14-in. rolls.
4. Bucket elevator.
5. Trommel, 5/8-in. round openings.
6. Shaking screen, 1/16-in. round openings.
7. 1 @ 30×36-in. 6-cell Cooley jig.
8. 1 @ 8-ft. dewatering cone; overflow to grinding circuit.
9. Bucket elevator.
10. Settling tank.
11. Transfer car; fine-ore bin.
12. 1 @ 4×4-ft. ball mill; 2- and 3-in. balls rationed to requirements; 72% solids.
13. 1 @ 2 1/4×14 2/3-ft. rake classifier; overflow, 48% solids.
14. 2-in. Denver vertical sand pump.
15. 1 @ 4-cell No. 12 Denver Sub-A machine; *a* = cells 2–4, *b* = cell 1. Feed: 28 *mog*, 32% <150-m.
16. 1 Wilfley table; concentrate 75% Pb.
17. 1 @ 4×4-ft. Denver conditioner.
18. 1 @ 8-cell No. 12 Denver Sub-A machine; *a* = cells 2 to 8, *b* = cell 1.
19. 1-in. Denver vertical sand pump; 8-ft. dewatering cone; 4×2-ft. drum filter; cake 6% water.
20. 25% solids.

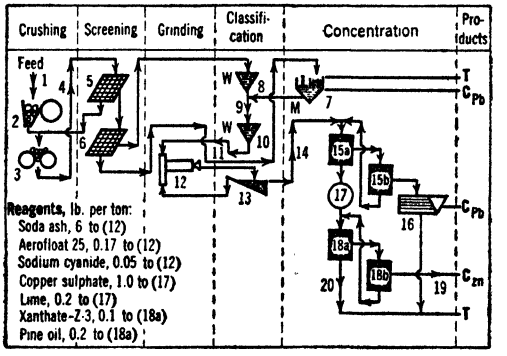

FIG. 104. DODGEVILLE MINING Co.

Table 73. Assays and recoveries at Dodgeville Mining Co.

Material	Tons per 24 hr.	Assays, %		Distribution, %	
		Pb	Zn	Pb	Zn
Feed	192	0.93	4.5	100.0	100.0
Jig lead conc	1.2	75.0	2.0	50.5	0.3
Jig middling (flotation feed)	38.4	1.50	20.1	32.4	89.1
Jig tailing	152.4	0.20	0.6	17.1	10.6
Flotation lead conc	0.7	75.0	2.0	29.3	0.2
Lead concentrate, combined	1.9	75.0	2.0	79.8	0.5
Flotation zinc conc	12.3	0.4	61.5	.....	88.1
Flotation tailing	25.4	Tr.	0.5	3.1	0.8
Tailing, total	177.8	0.2	0.58	20.2	11.4

Summary. Two-stage crushing to $^5/_8$-in.; jigging of $^5/_8$~$^1/_{16}$-in. feed to make finished lead concentrate, tailing, and a lead-zinc middling; grinding middling to 28 *mog* and differential floating by rougher-cleaner flows in both lead and zinc circuits with lead concentrate run up in grade by tabling.

Two-jig mill. VINEGAR HILL ZINC CO. has a typical 2-jig mill at Platteville, Wis., comprising 2-stage primary crushing in jaw crusher and closed-circuit rolls to about $^1/_2$-in.; desliming and rough jigging the deslimed material to discard tailing, returning middling to the primary-crushing circuit, and sending rough concentrate to a secondary closed rolls circuit, the product of which is rejigged, making finished lead concentrate, a middling circulated through the grinding circuit, and a rough zinc concentrate which is sent to a custom flotation plant. Slimes are tabled to make lead concentrate, tailing, and middling to flotation. Recovery is about 90% Pb and 80% zinc. Cost, about 35¢ (1941).

National Zinc Separating Co. Fig. 105 (*107 J 1107*).

Location: Cuba City, Wis.
Ore: Zinc-iron concentrate from Wisconsin district zinc mills.
Capacity: 275 tons per 24 hr.
Assays, % Zn: Feed, 20 to 45; concentrate, 59 to 61.5; tailing, 4 to 5.
Costs: Roasting and separating, $1.28; Cottrell precipitator, $0.18; receiving and shipping, $0.91; general, $0.63; total, $3 per ton of roaster feed.

Legend for Fig. 105:

1. Gravity concentrates from neighboring plants.
2. Sampler; bin with separate compartments for concentrates from different mines.
3. 22 1/2-ft. diameter roaster, 1 drying hearth and 7 for roasting. No fuel added. Maximum temperature at seventh hearth, 900° to 1,000° F. Surface of marcasite oxidized to Fe_3O_4. Decrepitation during roasting (see Table 74) causes a decrease in CaO content through dusting. LINDEN ZINC CO., Linden, Wis., and WISCONSIN ZINC CO., Cuba City, Wis., use an oil-fired rotary kiln on the ground that the degree of roasting can be better regulated.
4. Gas.
5. Cottrell precipitator. 2 units, can be operated together, but ordinarily operated separately and alternately for 2-week periods. Feed about 9,000 cu. ft. of gas per min. at 290° F.; velocity, 6 f.p.s. 36 collecting electrodes in each unit, made of 12-in. 14-gage steel pipe 15 ft. long.
6. 4 to 5% SO_2.
7. About 95 to 97% of total roasting loss. Comprises about 1.6% of solid feed to furnace.
8. 4 @ 2×26-ft. rotary cooling drums. 6 r.p.m. Shells $^5/_{16}$ in. riveted steel plate. Water-cooled by outside spray. 30 gal. water per min. per machine. Ore not completely cooled, as it is not then so magnetic as when slightly warm to the hand.
9. Dings MM-type magnetic separators. Campbell, Wetherill & Knowles magnets used in other plants in district. First poles draw 2 amp. at 225 volts; second, 3 amp. at 225 volts. Air gap of secondary magnets to shaking tray, 3/8 to 1/2 in. Capacity, 60 tons per 24 hr.
10. 56 to 58% Zn and 4 to 5% Fe.
11. Dings-type HI magnetic separator. 2 @ 12-in. feed belts, 70 f.p.m. 4 magnets in series drawing 7 1/2 to 15 amp. Capacity, 40 to 45 tons per 24 hr.

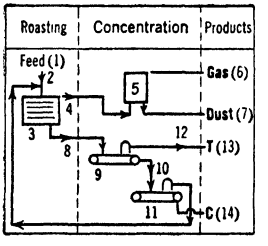

FIG. 105. NATIONAL ZINC SEPARATING CO.

Table 74. Screen analyses of feed and product of zinc-concentrate roaster

Size	Weight, per cent.	
	Feed	Product
0.25-in.	0.20	0.10
0.12	21.70	9.70
10-m.	17.90	7.80
20	28.10	23.30
40	22.90	29.10
<40	9.20	30.00

Legend for Fig. 105—Continued:

12. Belt conveyor; elevator; storage bin; sulphuric-acid plant.
13. Magnetic product. Averages 25% S and 4 to 5% Zn.
14. 61.5% Zn.

Summary. Roasting and magnetic separation.

Zinc carbonate ores are relatively rare.

In the Highland, Wis., district (*99 J 906*) small deposits of mixed carbonate and sulphide ore are worked by leasers. The ore is hand-picked and the high-grade material stacked on the surface until sufficient has accumulated or until weather conditions are suitable and is then crushed in a set of slow-speed rolls, roughly concentrated in a log washer and cleaned on a power hand jig. The mixed concentrate carries about 40% Zn. Recovery is, naturally, low, but the deposits are too small to warrant more elaborate equipment. At MONTEPONI, Sardinia (*83 J 1094*), a 500-ton plant treating calamine in dolomite with some zinc, lead, and iron sulphides consists of a 4-in. grizzly and a series of shaking screens of 1.25-, 0.8-, 0.55-, 0.4-, 0.28-, 0.2-, 0.12-, and 0.08-in. apertures to prepare feed for a picking belt and a series of jigs. Concentrate and tailing are rejected at all sizes and middling is reground and treated by magnetic separation to remove iron.

New Jersey Zinc Co. Fig. 106 (*Q* by J. S. Pellett, Mill Sup't).

Location: Franklin, N. J.
Ore: Willemite, franklinite, and zincite in calcite gangue.
Capacity: 1,640 tons per 24 hr.
Assays, % Zn: feed, 20; concentrate: magnetic (franklinite), 17; gravity (willemite-zincite), 47; tailing, 1.25.
Recovery: 98%.
Labor: American, Hungarian. Tons per man-shift: operating, 11.5; repairs, 31.4.
Running time: 94%. Loss due to repairs and feed delays.
Water: Comes 1/8 mi. by gravity from river. About 99% re-used. Net consumption is 1/6 ton per ton of ore.
Building: Old buildings are frame; new are steel and concrete. Concrete floor in wet parts, slope 1/4 in. per ft. Some of buildings heated. Site, part level and part sloping.
Machinery handling: Chain blocks and cranes.
Power: Company steam-power plant. Motors, 440-volt, 60-cycle. CONSUMPTION, 18.7 hp-hr. per ton milled.
Transportation: Ore skips discharge into crusher bins. Main-line railroad at plant. Concentrate, 90 mi. by rail to smelter.
Tailing ent by rail to mine for fill.

Legend for Fig. 106:

1 Ore, about 12-in. max., hoisted into headframe in 5-ton skips.
2. Grizzly, 3-in. spaces.
3. Steel hopper with roll feeder.
4. 3×6-ft. wash trommel, 2-in. square openings.
5. Horizontal revolving annulus, serving as a picking table. 2 men remove steel, wood, rope, etc., and some waste rock which is returned as mine fill.
6. 8-K Gates gyratory, 3-in. open setting. A duplicate is in parallel as a spare.
7. Scraper dewaterer.
8. 30-in. belt conveyor with Merrick weightometer.
9. 32×36-in. fixed inclined-plate screen, 1.5-in. sq. openings.
10. Stream passes in order: (*a*) 36-in. belt conveyor, one man removes wood and some rock, which is used for mine fill; (*b*) 2 @ 1,700-ton circular steel storage bins with roll feeders; (*c*) belt conveyor.
11. 1 @ 36×36-in. Edison-type corrugated rolls, 1 1/2-in. set.
12. 32×36-in. fixed inclined-plate screen, 5/8-in. slots.
13. Tower drier. Sec. 17, Fig. 5. Dried to about 1% moisture.
14. 2 suction fans.
15. Air settler separating dust and granular material.
16. In order: (*a*) chain-bucket elevator; (*b*) flight conveyor; (*c*) 2 @ 1,700-ton circular steel bins with roll feeders; (*d*) belt conveyor.
17. Duplicate of (12).
18. Belt conveyor.
19. 1 @ 36×36-in. Edison-type corrugated rolls, 3/4-in. set. Sec. 4, Table 24.
20. Duplicate of (12).
21. 1 @ 36×36-in. Edison-type rolls, 5/8-in. set, Sec. 4, Table 24.
22. (*a*) Belt conveyor; (*b*) chain-bucket elevator.
23. Duplicate of (12).
24. In order: (*a*) 2 belt conveyors; (*b*) chain-bucket elevator; (*c*) belt conveyor; (*d*) surge bin with roll feeders.
25. 6 @ 4×5-ft. Hum-mer screens, 0.101-in. aperture.
26. (*a*) 2 belt conveyors; (*b*) surge bin.
27. 1 @ 32×36-in. Edison-type rolls, set 0.1 in. Sec. 4, Table 24.
28. Water added.
29. 2 @ 6-ft. cones.
30. 3 triple-deck rake classifiers. Sand: 6% >8-m., 9% <200-m.; overflow: 2% >150-m., 88% <200-m.
31. (*a*) 2 belt conveyors; (*b*) flight conveyor.
32. 3 Oliver top-feed drum-type sand filters.

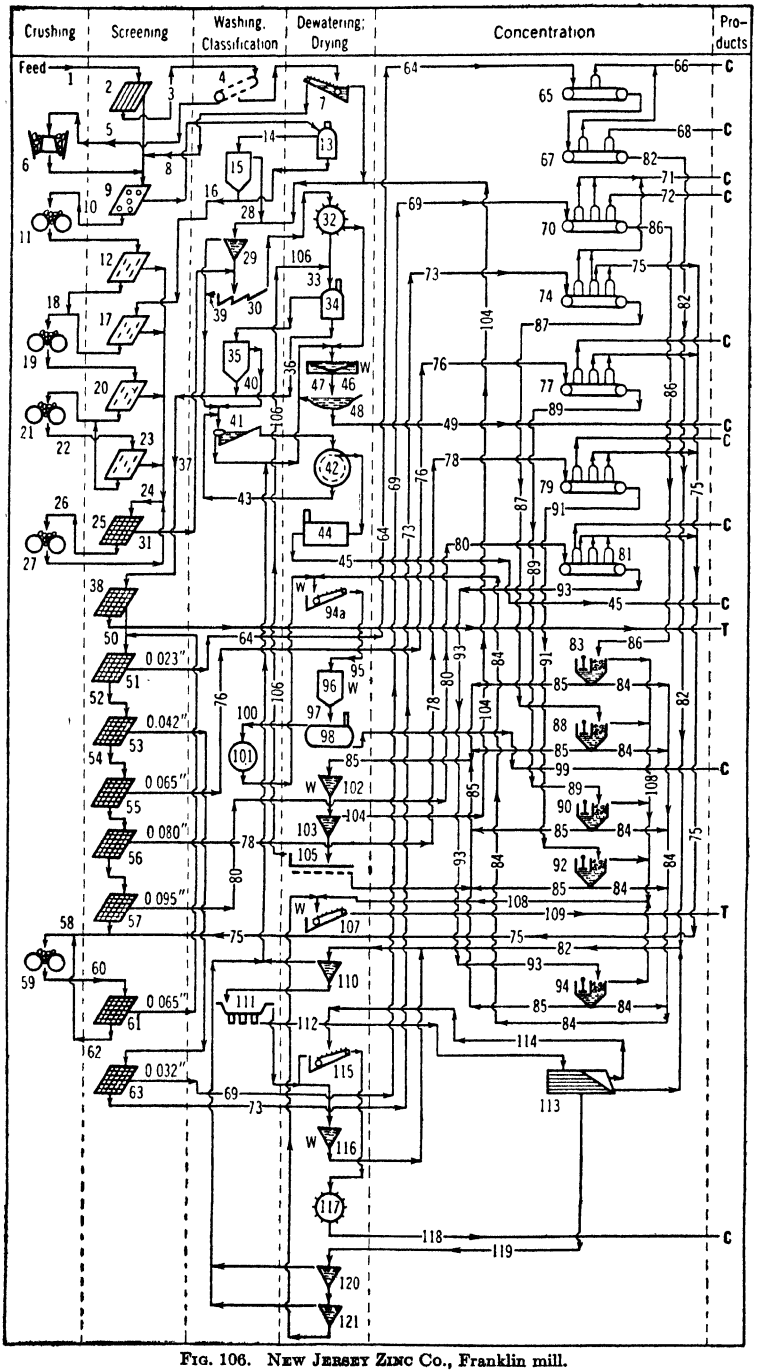

FIG. 106. NEW JERSEY ZINC CO., Franklin mill.

Legend for Fig. 106 on page 163.

Legend for Fig. 106—Continued:

33. (*a*) 24-in. belt conveyor; (*b*) belt-bucket elevator; (*c*) flight conveyor; (*d*) roll feeder.
34. 3 tower driers, one a spare. Sec. 17, Fig. 5.
35. Like (15).
36. Chain-bucket elevator.
37. Pan conveyor.
38. 1 @ 4×5-ft. Hum-mer chip screen, 0.5-in. aperture.
39. (*a*) Chip screen; (*b*) 4-in. Wilfley pump.
40. Water added; thence through 2 wet settling chambers and 1 @ 2-in. Wilfley pump.
41. Bowl-rake classifier. Sand: 1% >20-m., 78% <200-m.; overflow: 1% >150-m., 98% <200-m.
42. Shimmin filter.
43. 2-in. Wilfley pump.
44. Christie drier.
45. In order: (*a*) 2 belt elevators; (*b*) baghouse; (*c*) bin; (*d*) railroad cars.
46. 1 @ 90-ft. thickener.
47. 3-in. Morris pump.
48. Settling ponds.
49. Railroad cars.
50. In order: (*a*) flight conveyor, (*b*) 10,000-ton storage bin, (*c*) 2 belt conveyors in parallel, (*d*) belt conveyor, (*e*) 2 elevators in series, (*f*) 36-in. flight-conveyor distributor, (*g*) 6 roll feeders.
51. 6 @ 4×8-ft. Hum-mer screens, 0.023-in. aperture. Sec. 7, Table 34.
52. In order: (*a*) 2 @ 24-in. belt conveyors in series; (*b*) automatic equal-weight distributor with 3 roll feeders.
53. 3 @ 4×10-ft. Selectro screens, 0.042-in. aperture. Sec. 7, Table 41.
54. 18-in. belt conveyor.
55. 1 @ 4×10-ft. Selectro screen, 0.065-in. aperture.
56. Duplicate of (55) with 0.080-in. cloth.
57. Duplicate of (55) with 0.095-in. cloth.
58. In order: (*a*) flight conveyor, (*b*) elevator, (*c*) belt conveyor, (*d*) surge bin.
59. 4 @ 26×15-in. rolls, set 0.042 in. Sec. 4, Table 24.
60. (*a*) 2 belt conveyors in parallel; (*b*) 2 bucket elevators in parallel.
61. 2 @ 5×8-ft. Hum-mer screens, 0.065-in. aperture.
62. 2 surge bins.
63. 3 @ 4×8-ft. Hum-mer screens, 0.032-in. aperture.
64. 12 surge bins, <0.023-in. material.
65. 12 @ 2-pole Wetherill-type magnetic separators.
66. In order: (*a*) 2 parallel belt conveyors, (*b*) 2 elevators in parallel, (*c*) Merrick weightometer, (*d*) flight conveyor, (*e*) bins, (*f*) railroad cars.
67. 24 @ 4-pole Wetherill-type magnetic separators.
68. In order: (*a*) 2 parallel belt conveyors, (*b*) 2 elevators in parallel, (*c*) Merrick weightometer, (*d*) flight conveyor, (*e*) bins, (*f*) railroad cars.
69. Surge bin, 0.032~0.023-in. material.
70. 8 @ 6-pole Wetherill-type magnetic separators.
71. In order: (*a*) 2 parallel belt conveyors, (*b*) 2 elevators in parallel, (*c*) Merrick weightometer, (*d*) flight conveyor, (*e*) bins, (*f*) railroad cars.
72. In order: (*a*) Screw conveyor, (*b*) elevator, (*c*) belt conveyor, (*d*) bins, (*e*) railroad cars.
73. Surge bin, 0.042~0.032-in. material.
74. 8 @ 6-pole Wetherill-type magnetic separators.
75. (*a*) flight conveyor, (*b*) elevator, (*c*) belt conveyor.
76. Surge bin, 0.065~0.042-in. material.
77. 6 @ 6-pole Wetherill-type magnetic separators.
78. Surge bin, 0.080~0.065-in. material.
79. 6 @ 6-pole Wetherill-type magnetic separators.
80. Surge bin, 0.095~0.080-in. material.
81. 4 @ 6-pole Wetherill-type magnetic separators.
82. Surge bin, <0.023-in. magnetic-separator tailing; by belt feeders and 2 @ 3-in. Morris pumps.
83. 8 @ 4-hutch Franklin jigs. *a*
84. Hutches 1 to 3.
85. Hutch 4. By 2 @ 12-in. screw conveyors and 2 @ 3-in. Wilfley pumps.
86. Surge bin, 0.032~0.023-in. magnetic-separator tailing.
87. Surge bin, 0.042~0.032-in. magnetic-separator tailing.
88. 8 @ 4-hutch Franklin jigs. *a*
89. Surge bin, 0.060~0.042-in. magnetic-separator tailing.
90. 6 @ 4-hutch Franklin jigs. *a*
91. Surge bin, 0.080~0.060-in. magnetic-separator tailing.
92. 6 @ 4-hutch Franklin jigs. *a*
93. Surge bin, 0.108~0.080-in. magnetic-separator tailing.
94. 6 @ 4-hutch Franklin jigs. *a*
94*a*. 2 dewatering drags.
95. Elevator.
96. 3 @ 14 1/2-ft. drainage tanks.
97. 1 @ 18-in. belt feeder; 1 @ 14-in. belt conveyor; roll feeder.
98. Link-Belt Roto-louvre drier.
99. In order: (*a*) Roll feeder, (*b*) elevator, (*c*) 16-in. screw conveyor, (*d*) storage bins, (*e*) 18-in. belt conveyor, (*f*) elevator, (*g*) shipping bins, (*h*) railroad cars.
100. Dust. Water added.
101. Schmeble washer.
102. 1 @ 16-ft. cone.
103. 1 @ 3-ft. Allen cone.
104. 1 @ 4-in. Wilfley pump.
105. 1 @ 6-ft. Oliver filter table.
106. In order: (*a*) elevator, (*b*) 1 @ 250-ton bin, (*c*) 12-in. screw conveyor, (*d*) elevator.
107. 2 dewatering drags.
108. 2 screw conveyors. Overflow to surplus water.
109. In order: (*a*) elevator, (*b*) 18-in. belt conveyor, (*c*) bins, (*d*) railroad cars, (*e*) mine fill.
110. 2 @ 8-ft. Allen cones.
111. 2 @ 20-spigot Pellett classifiers. Sec. 8, Art. 11.
112. Spigots separately.
113. 40 Wilfley tables.
114. In order: (*a*) 2 shaking launders, (*b*) 2 @ 2-in. Wilfley pumps, (*c*) 2 automatic samplers, (*d*) 1 @ 3-in. Wilfley pump.
115. Dewaterer.
116. 2 @ 16-ft. cones.
117. 1 @ 2×6-ft. top-feed Oliver drum-type sand filter.
118. In order: (*a*) shipping bins, (*b*) railroad cars.
119. 2 @ 3-in. Morris pumps.
120. 1 @ 16-ft. cone.
121. 1 @ 6-ft. cone.

a Sec. 11, Table 29.

Summary. Graded crushing dry from <12-in. to <1/2-in. fine-roll feed n four stages comprising a gyratory and three Edison rolls in series, with circuit closed on the last pair of rolls. Nominal maximum-size reduction ratio on the gyratory is 4 and on the rolls 2. Fine crushing dry to 0.1-in. magnetic-separator feed size in one stage by rolls in closed-circuit with screens, with a final set of rolls to recrush oversize on rescreening. Washing to recover rich slime and clean sands for concentration. Concentration by magnetic separation of six closely sized feeds below 0.1-in., with return of separator middling to regrind rolls; jigging of coarse separator tailing at the same close sizes treated on the separators; and tabling of the fine separator tailing after close hydraulic classification.

This flowsheet is unique, adapted for the treatment of a unique, rich ore which contains three zinc minerals of markedly different zinc content (franklinite, 25.8% Zn; willemite, 41.4; zincite, 80.2). While it would be possible to concentrate the franklinite on jigs and tables, to do so would seriously lower the grade of the gravity concentrate and likewise destroy the iron-free smelter feed that the gravity concentrate now constitutes. The dusts and slimes taken for concentrate assay substantially the same as the feed (20% Zn).

Halkyn District United Mines, Ltd. Fig. 107 (*46 IMM 339; 48 IMM 691*).

Location: Halkyn, North Wales.
Ore: Galena, cerussite (up to 25% of total Pb) and sphalerite in calcite, limestone, and shale.
Capacity: 400 tons per 24 hr.

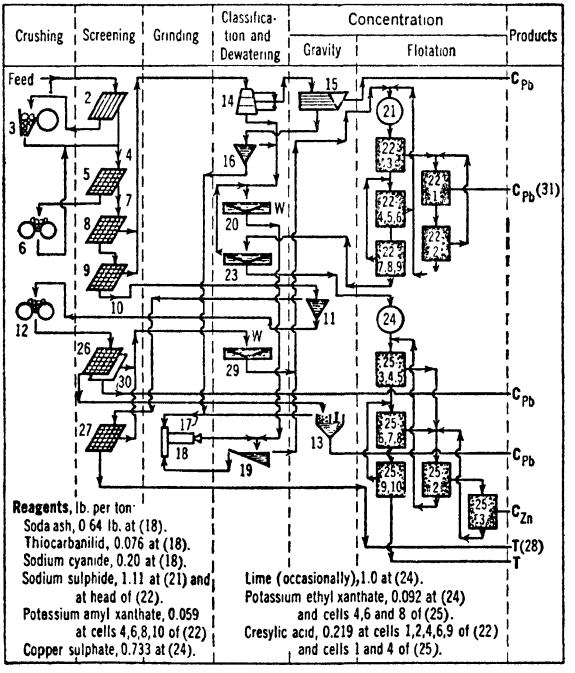

Legend for Fig. 107:

1. Bin.

2. Roller grizzly, 1 1/2-in. aperture, under Ross feeder.

3. Blake crusher, 1 1/4-in. open setting.

4. Belt conveyor, bucket elevator.

5. H-H shaking screen, 1-in. round holes.

6. Rolls, 1/2-in. set.

7. Conveyor; 100-ton bin with variable-speed belt feeder; time sampler; 16-in. × 80-ft. belt conveyor, +16°, 224 f.p.m.

8. Parker contraflow cylindrical washer, 10 r.p.m., 2.5-mm. separation.

9. 1 @ 2×6-ft. Overstrom jigging screen, 2.8-mm., wedge-wire screen, 1-in. throw.

10. 1 @ 16-in.×63-ft. belt conveyor, +20°, 133 f.p.m., with suspended magnet; 1 @ 24-ton bin.

11. Sink-float separator, 8×3×7 1/2(deep)-ft. (See Sec. 11, Fig. 76); optimum running density = 2.76; feed contains 2 to 3% moisture. 39% >12-mm.; 5% <2.5-mm. Medium, 4% >150-m. 83% of sink-float feed eliminated here = 55% of total mill feed.

12. Sandycroft rolls, 3/8-in. set.

13. Halkyn jig. Makes concentrate 84% Pb from hutches Nos. 1 and 2 and 80% Pb from hutch No. 3. Feed aver. 60% Pb; middling 30 to 40% Pb.

14. Hydraulic classifier, spitzkasten and settling box in series.

15. 3 Herkules shaking tables in parallel, each treating a separate deslimed product. Feed, 25% Pb; concentrate, 80 to 82% Pb.

16. 3-ft. dewatering classifier.

17. 5-ton surge bin.

18. 1 @ 5-ft.×36-in. Hardinge ball mill, 6,000 lb., @ 2 1/2 and 3-in. balls, 75% solids.

19. 1 @ 3-ft. Stokes simplex classifier; overflow, 37% solids, 90% <80-m.

20. 1 @ 50-ft. thickener.

21. 1 @ 6×6-ft. Denver conditioner.

22. 1 @ 9-cell No. 18 Denver Sub-A flotation machine. Concentrate = 78% Pb, recovery, 90% total lead, 50 to 70% of oxidized Pb, being lower the higher the oxidized lead content. Feed is to cell No. 3, 2 is a cleaner, and 1 is a recleaner.

FIG. 107. HALKYN DISTRICT UNITED MINES.

Legend for Fig. 107—Continued:

23. 1 @ 40-ft. thickener.

24. As (21).

25. 1 @ 10-cell No. 18 Denver Sub-A flotation machine.

26. 1 @ 2 1/2×6-ft. 2-deck Niagara screen, 1.95-mm. and 80-m. apertures, Risdon sprays.

27. 1 @ 3×9-ft. Overstrom jigger screen, 1/2-mm. wedge-wire, with Risdon nonclog sprays.

28. Sold for aggregate and road surfacing.

29. 1 @ 15-ft. thickener. Used also in the medium-recovery flow.

30. 77% Pb.

31. Ground for medium. See Sec. 11, Art. 28.

Assays and recoveries: See Table 75.
Power: 22 hp-hr. per ton.
Labor: 8.5 tons per man-shift.
Costs, ¢ per ton of original feed: Crushing, 8.6; sink-float, 16.8; jigging, 3.2; tabling, 3.0; grinding, 4.6; flotation, 10.4; miscellaneous, 36.2; total, 82.8. (This covers a break-in period.)

Table 75. Assays and recoveries at Halkyn

Material	Assay, %		Distribution, %	
	Pb	Zn	Pb	Zn
Feed	12.46	2.21	100.0	100.0
Jig conc	81.20	2.00	30.6	4.2
Table concentrate	80.42	2.81	46.2	9.1
Flotation lead conc	77.95	5.72	20.4	8.4
Total lead conc	80.12	3.18	97.2	21.8
Zinc conc. (flotation)	4.04	62.56	0.8	67.7
Sink-float tailing	0.07	0.13	0.3	3.5
Flotation tailing	0.79	0.56	1.7	7.0
Total tailing	0.33	0.28	2.0	10.5

Summary. Two-stage crushing to 1-in.; washing to remove <2.5-mm. material; sink-float treatment of >2.5-mm. with rejection of 55% of mill feed as tailing; classification and tabling of <2.5 mm. primary feed, making finished concentrate; crushing and jigging of sink-float concentrate; regrind and flotation of jig and table middling.

Bunker Hill & Sullivan Mining & Concentrating Co., West mill. Fig. 108 (*Q* by R. S. Handy; *140 # 8 J 53*).

Location: Kellogg, Idaho.
Ore: Approximate composition: Galena, 10%; marmatite + some sphalerite, 8%; pyrite + siderite, 36%; quartzite, 46%; Ag, 4 oz. per ton; small amounts of tetrahedrite and chalcopyrite.
Capacity: 1,200 tons per 24 hr.
Assays: See Table 76.
Recovery: See Table 76.

Table 76. Metallurgical results, Bunker Hill & Sullivan Mining & Concentrating Co.

Material	Per cent.				Oz. per ton
	Pb	Zn	Fe	Insol.	Ag
Feed	8.6	5.0	.....	.....	3.6
Lead conc	60	5.5	11	1.5	25
Zinc conc	2	51.5	7	3.8	2
Tailing	0.74	0.90	15	61	.....
Recovery, %	90	77.7	.....	.....	91.5

Ratio of concentration: 5 : 1.
Labor: American. Tons per man-shift: operating, 50; repairs, 157.
Water: By gravity pipe line 3.5 mi. from springs; CONSUMPTION, 3.6 tons per ton milled; about 50% re-used.
Building: Wood; sloping site. Wood floors slope 0.1 in. per ft., which is found to be satisfactory. Steam heat.
Machinery handling: Chain blocks and air hoist.
Power: Purchased. Transmitted 80 mi. at 110,000 primary and 2,300 secondary voltage. Motors, 2,300-volt, 60-cycle for 25-hp. and over; 440- and 220-volt for smaller. CONSUMPTION, 24 hp-hr. per ton of ore milled.
Running time: 96%. One day per month set aside for oiling and repairs.
Transportation: Railroad at concentrator. Feed, 1/4 mi. in mine cars by electric locomotive; concentrate, 1 mi. to smelter.
Tailing: Pumped to settling dam, overflow to river.

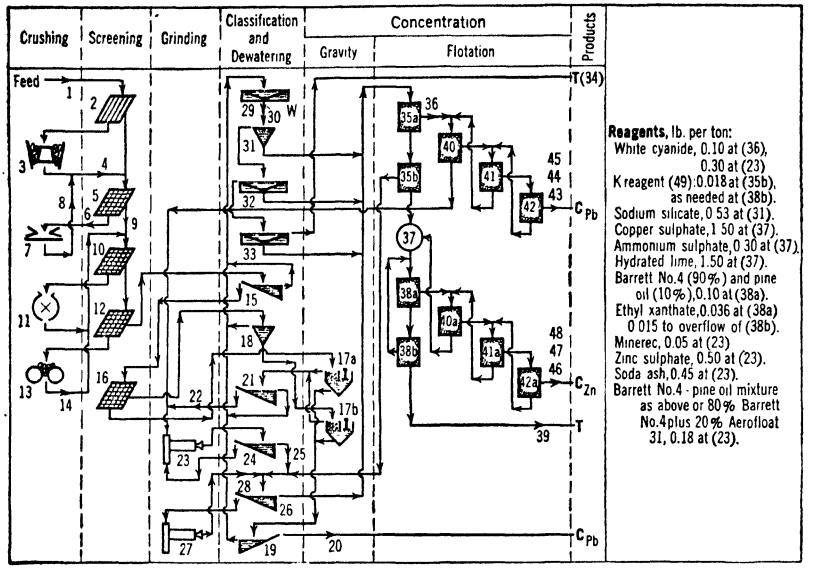

Legend for Fig. 108:

1. Mine storage bin, 6 chute feeders, 42-in. conveyor, 54-in. suspended magnet.

2. Grizzly, 1 1/4-in. spaces.

3. 2 @ No. 5 gyratories, 2 1/2-in. open setting.

4. 24-in. conveyor.

5. 1 @ 4×10-ft. vibrating screen, 1×2-in. aperture.

6. 20-in. conveyor.

7. 1 @ 36-in. vertical disk crusher.

8. 24-in. conveyor.

9. 24-in. tripper conveyor, mill storage bin, 9 chute feeders, 20-in. conveyor, feed-sample cutter, 2-way distributor feeding two sections, both alike, as follows: 12-in. conveyor.

10. 1 @ 48-in. trommel, 15×25-mm. slots.

11. 1 @ 24-in. Centriflex crusher or 1 @ 36×14-in. rolls, 1/4-in. set.

12. 1 @ 48-in. trommel, 7×15-mm. slots.

13. 2 @ 36×14-in. rolls, 1/16-in. set.

14. 16-in. belt-bucket elevator.

15. 10-in. belt-drag classifier.

16. 2 @ 48-in. trommels, 2 1/2×6-mm. slots.

17. 2 @ 2-compartment (25 1/2×33 1/2-in.) Harz jigs. See Sec. 11, Table 4, for operating data.

18. Bunker Hill cone-type classifier.

19. 6-in. belt-drag dewaterer.

20. Bin and smelter.

21. 12-in. belt-drag dewaterer.

22. Bin, belt feeder, 16-in. conveyor.

23. 1 @ 8-ft.×36-in. conical ball mill.

24. 1 @ 6-ft. rake classifier.

25. 1 @ 4-in. Wilfley pump.

26. 2 @ 6-ft. rake classifiers.

27. 3 @ 6-ft.×22-in. conical ball mills.

28. 12-in. bucket elevator.

29. 3 @ 40×12-ft. thickeners.

30. 1 @ 3-in. Wilfley pump.

31. 2 @ 8-ft. cones.

32. 1 @ 12-ft. Hydroseparator.

33. 1 @ 40-ft. thickener.

34. The solids here are principally "primary slime" (talc, clay, etc.) which affect flotation adversely. See also Sec. 12, Art. 7.

35. 4 @ 10-cell 27-in. Denver Sub-A flotation machines in parallel; *a* = cells 1 to 5, *b* = cells 6 to 10. Feed, 1% >35-m. 62.8% <200-m. 392 r.p.m., 2.4 hp. per cell, 55° F., 4 1/2 min., 38% solids, *p*H 7.6.

36. 12-in. bucket elevator.

37. 6×12-ft. conditioner.

38. 5 @ 10-cell 27-in. Denver Sub-A machines in parallel; *a* = cells 1 to 5, *b* = cells 6 to 10. 5 min., 33% solids.

39. 6-in. Wilfley pump.

40, 41, 42. 1 @ 5-pan Hearing cell. 4-lb. pressure, 250 cu. ft. per min. per machine. Table 77 shows progress of cleaning. Solid contents in the first, second, and third stages of cleaning in both circuits are 10, 8, and 6% respectively.

40a, 41a, 42a. As (40, 41, 42).

43. 12-in. bucket elevator.

44. 1 @ 8×8-ft., 1 @ 5.33×4-ft., 1 @ 6×8-ft. Oliver filter. Froth, discharged from final cleaners at about 50% solids is completely broken down by bucket elevator without use of wash water.

45. Cake by conveyor to smelter.

46. 12-in. bucket elevator.

47. 1 @ 14×8-ft. Oliver filter.

48. Cake by 16-in. conveyor to smelter.

49. At eighth cell. Oleic acid, 45.1%; kerosene, 40.6%; soda ash, 5.5%; sodium silicate, 8.8% (*U. S. pat.* 2,164,063).

FIG. 108. BUNKER HILL & SULLIVAN M. & C. Co.

Summary. Crushing from run-of-mine (head-size) to <7-mm. by gyratory, vertical disk, and 2-stage rolls in closed-circuit with a trommel; coarse galena scalped from <7-mm. sands by jigs; jig tailing ground to 35 *mog;* simple lead-zinc differential flotation, roughing

Table 77. Enrichment in triple cleaning of lead and zinc rough concentrates at Bunker Hill & Sullivan Mining & Concentrating Co.

Product	Percentages							
	Lead circuit				Zinc circuit			
	Pb	Zn	Fe	Insol.	Pb	Zn	Fe	Insol.
Rougher conc.	35.5	14.8	13.3	5.1	2.7	37.5	10.8	14.8
First cleaner:								
Conc.	47.5	10.5	11.6	2.1	2.0	49.5	8.1	6.1
Tailing	10.0	25.1	17.3	10.6	2.8	24.5	14.8	26.7
Second cleaner:								
Conc.	55.2	8.0	10.7	1.6	2.6	50.8	8.0	4.8
Tailing	11.0	22.7	18.5	8.5	4.2	25.5	15.0	22.9
Third cleaner:								
Conc.	56.7	6.9	11.0	1.5	2.3	52.5	7.3	3.8
Tailing	12.1	22.9	18.1	9.4	3.3	31.5	14.6	15.9

<35-m. "decolloided" primary classifier overflow, and regrinding primary lead middling before return to the head of the roughing circuit; triple cleaning of both rougher concentrates.

The principle of this flowsheet is to scalp out all galena freed by crushing to 1/4-in., together with that further amount freed by grinding the scalped sands to 35-m., confining fine grinding to the locked middling lifted in the lead-flotation circuit. Such treatment is, of course, possible only when the mineral is relatively coarsely disseminated. Removal of the finest primary slime (DECOLLOIDING) is asserted to improve both recovery and grade of concentrate. By comparison with BROKEN HILL SOUTH (Fig. 109), the relatively low grades of final flotation concentrates and low recoveries are hard to understand; they are not impossibly due to the coal-tar oil added at the grinding mill, which should have the effect of making a tough froth, hard to clean.

Broken Hill South, Ltd. Fig. 109 (T. A. Read, Chief Metallurgist, *88 Aa 247; 98 Aa 305*).

Location: Broken Hill, New South Wales.
Ore: Galena and blende in quartz, quartzite, feldspar, chlorite, calcite, and rhodonite.
Capacity: 1,300 tons per 24 hr.
Assays: See Tables 78, 80, and 81.

Table 78. Assays at Broken Hill South

Material	Percentages			
	Feed	Gravity concentrate	Flotation concentrate	
			Lead	Zinc
Insol.	.....	2.30	1.02	.....
SiO_2	32.91	.....	.....	1.60
Pb	14.40	77.20	73.40	1.50
As	.....	0.27	0.02	0.07
Sb	.....	0.16	0.39	0.06
Cu	.....	0.09	1.36	0.11
Cd	.....	.....	.....	0.17
Fe *a*	5.93	1.18	1.77	8.48
MnO	5.94	0.52	0.41	1.95
Zn	12.20	3.20	4.60	53.20
Al_2O_3	4.08	0.40	0.35	0.60
CaO	9.16	0.30	0.35	0.42
MgO	0.12	.....	.....	.....
CO_2	3.60	.....	.....	.....
S	9.65	14.30	16.00	31.80
Ag, oz. per ton	6.40	23.60	47.60	1.50
Au, grains per ton	2.4	6.0	11.2	1.9

a The blende is dark colored and contains considerable iron and manganese.

Recovery: Pb, 95.1%; Ag, 89.7%; Zn, 88.6%.
Ratio of concentration: Pb-Ag, 5.5 : 1; Zn, 4.9 : 1.
Water: Mill supply is a combination of mine water, reclaimed water, and make-up from the town mains. Dissolved salts total 350 to 450 grains per gal., principally sulphate and chloride of Ca, Mg, and Na. The same water is supplied to both lead and zinc flotation circuits at pH about 7.9.

Power, hp-hr. per short ton of crude ore: Coarse crushing and conveying, 1.01; roll crushing, 1.72; screening, 0.05; jigging, 0.11; grinding, 5.56; classification, 0.08; tabling, 0.27; flotation, 6.09; elevators and pumps, 1.87; concentrate dewatering, 0.99; tailing disposal 1.10; water supply, 1.04; total, 19.9.

Labor, tons per man-shift: Operating, 22; maintenance, 86; total, 17.5.

Mill building: Steel and concrete, with galvanized-iron enclosure. For floor areas and slopes see Table 79. Coarse crushing plant is served by a 6 1/2-ton traveling crane.

Table 79. Floors in Broken Hill South mill

Apparatus	No. of floors	Size in ft., each	Total area, sq. ft.	Slope, in. per ft.
Elevators	4	12×11	528	.....
Screens	4	19×11	836	.....
Jigs	1	156×22	3,432	0.26
Floor under jigs	4	14×9 1/2	532	0.5
Tube-mill classifiers	1	156×22	3,432	.....
Tube mills	1	156×20	3,120	1.35
Tube-mill pumps	1	156×28 1/2	4,446	1.33
Dorr classifiers	1	104×28 1/2	2,964	0.975
Tables	1	104×77	8,008	2.0
Table pumps	1	104×15	1,560	0.15
Total floor area	.....	.....	28,858	.....
Flotation	.....	.....	13,000	.....
Total ground area	.....	.....	32,000	.....

Costs, per ton of crude ore (1935, labor at $20 per 44-hr. week): Coarse crushing and conveying, 0.07; gravity concentration section, 0.71; flotation and concentrate handling, 0.56; total $1.34.

Legend for Fig. 109:

1. 120-ton (live) reinforced-concrete front-discharge bin (flat-bottom; portion around discharge dropped 3 ft. 8 in.) lined front and parts of side and back with 2 1/2-in. plank, bolted through pipes set in walls, covered with 1 1/2-in. manganese-steel plates on front, and 3/8- and 1/2-in. mild-steel plates side and back; 1 @ 42-in.×12-ft. apron feeder, 9.5 to 11.2 ft. per min., 15-hp. slip-ring variable-speed (400 to 800 r.p.m.) motor, with 50 : 1 gear-speed reducer, 3.6 kw. at full load; shaking chute underneath delivers spills to (3). 1.1 tons timber picked per wk.

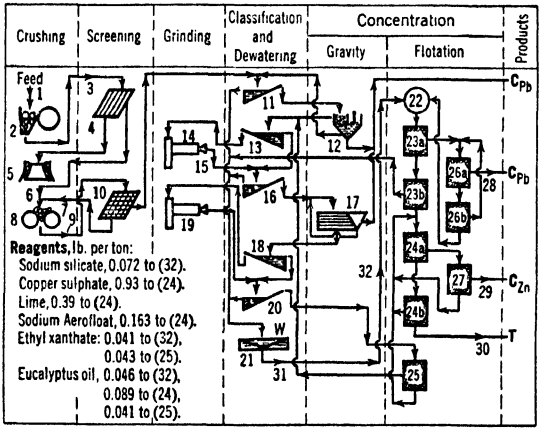

2. 1 @ 24×36-in. jaw crusher, 4 1/2-in. open setting, 258 r.p.m., 120-hp. motor, 58 hp. consumed under full load. Manganese-steel plates 0.03 lb. per ton.

3. 1 @ 3×8-ft. apron feeder, 41 f.p.m., 5 1/2-hp. motor with 22 : 1 gear-speed reducer, 2.8 hp. consumed.

4. 1 @ 42-in. 9-roll (12-in. diam.) cataract grizzly, 20° slope, 2 1/4-in. ring aperture, 15-hp. motor (6 hp. consumed); roller speeds from 28.7 r.p.m. at head end to 68.6 at discharge end; hard cast-iron rolls, 272,000 tons per roller. An 18-in. suspended bipolar magnet is hung 9 in. above grizzly.

5. 1 @ No. 52 Telsmith reduction gyratory, 395 r.p.m. (156 gyrations per min.), 150-hp. motor (65 hp. consumed), set for <2 1/2-in. product.

6. 1 @ 30-in.×432-ft. belt conveyor, 36-ft. lift, 250 f.p.m., 26-hp. motor (20.6 full-load hp., 5.4 hp. idling); 1 @ 30-in.×428-ft. belt conveyor, 50-ft. lift, 250 f.p.m., 26-hp. motor (24.5 full-load hp., 4.34 hp. idling); 1 @ 2,600-ton stockpile over conveyor tunnel; 1 @ 20-in.×136-ft. horizontal belt conveyor, 343 f.p.m.; 1 @ 20-in.×146-ft. inclined belt conveyor, 343 f.p.m.; 1 @ 24-in. magnetic pulley, 52 r.p.m.; 1 @ 20-in.×264-ft. inclined belt conveyor, 348 f.p.m.; 3 (one double) sloping-bottom roll-feed surge bins, 360 tons total live capacity; 4 @ 2×5-ft. apron feeders, 8 f.p.m.; 4 @ 20-in.×21-ft. belt conveyors (1 with Blake-Denison continuous weigher) 60 f.p.m.; 4 suspended magnets.

7. 4 sections as follows:

8. 1 @ 36×18-in. Cornish rolls (geared, 16 r.p.m.); one roll plain, the other with 5/8-in. flanges between which the plain roll tracks; set close and held up by 4 tension rods relieved by 10 to 12 @ 1 1/8×

FIG. 109. BROKEN HILL SOUTH.

Legend for Fig. 109—Continued:

15-in. rubber disks between steel disks; 50-hp. motor (46.9 hp. consumed); peripheral speed, 150 f.p.m.; cast chrome-steel shells, 4 5/8 in. thick, discarded at 1 to 1 1/2 in. = 0.16 lb. per ton total.

9. 1 @ 8×16-in.×45-ft. belt-bucket elevator; 355 f.p.m., 8.5 hp. consumed; steel housings lined with 1-in. plank (plus old belt on back).

10. 1 @ 4×5-ft. No. 39 Hum-mer screen, 4.22-mm. aperture, 34° slope, 41.2 tons wet solids per hr., 77 to 81% efficiency, 3.05-mm. steel-wire cloth has a life of 21,400 tons.

11. 1 drag-belt classifier, 15.75-sq. ft. basin, 4 1/2-ft. overflow length, 14-in. belt with 3×20-in. flights on 6-in. centers, 38.5 f.p.m., slope 4 in. per ft., 2 hp. consumed.

12. 1 May jig; see Sec. 11, Art. 5, for details of size and operation.

13. 1 drag-belt classifier, as (11) but with 20.75-sq. ft. basin and 44.2 f.p.m. belt speed; sand, 75 to 80% solids.

14. 1 @ 5×10-ft. grate-type ball mill.

15. 1 @ 3-in. Wilfley pump.

16. 1 @ 54-in.×18-ft. duplex rake classifier, 2 3/4 in. per ft. slope, 20 s.p.m.

17. 6 Butchart tables, Sec. 11, Table 60.

18. 1/2 duplex drag-belt classifier, 40-sq. ft. basin, 56-in. overflow, 4-in. per ft. slope, 2 @ 14-in. belts with 3×20-in. scrapers spaced 6 in., 58.5 f.p.m.

19. 1/2 @ 5×10-ft. tube mill, feed 29 tons per hr. 19% >40-m.; product, 7.5% >40-m.

20. 3 @ 4×19 2/3-ft. simplex rake classifiers for entire mill; 33 tons per hr.

21. 6 @ 25×10-ft. thickeners, 1,000 to 1,200 gal. per min. feed pulp, sp. gr. 1.063.

22 1 @ 12×3.5-ft. conditioner, 8 1/2 r.p.m., 6-hp. motor; entire mill stream joined here; sp. gr. 1.48 to 1.65.

23. 2 @ 12 cell South-mine subaeration machines, (*a*) first 7 cells, *p*H feed = 7.9; (*b*) 3 cells making middling; 2 spares. This is a 24-in. M-S subaeration cell with a shrouded Cunningham impeller (see Sec. 12, Art. 29) 19-in. diam., 1,442 f.p.m. 24.6 cu. ft. free air per min. per cell. Feed pulp sp. gr. = 1.5; power consumption, 4.75 hp. per impeller, 0.75 hp. per cell for air. See Table 80. Treatment time, 40 to 48 min. Sizing-assay test, see Table 81.

24. 3 @ 12-cell subaeration machines; (*a*) first 7 cells, *p*H feed = 8.3; (*b*) 3 cells making middling, 2 spares. 30.5 cu. ft. free air per min. per cell; time, 27 to 29 min.; total power per cell, 4.4 hp. For sizing-assay test see Table 81.

25. 1 @ 4-cell subaeration machine preceded by 1 agitation. Treatment time, 9 min. 34.6 cu. ft. free air per min. per cell; power consumption, 5.5 hp. total per cell.

26. 1 @ 6-cell subaeration machine; (*a*) 5 cells on concentrate, (*b*) 1 on froth middling. See Tables 80 and 81. Treatment time, 78 to 108 min. Power consumption, 3.5 hp. total per cell; air, 27.8 cu. ft. free air per min. per cell.

27. 1 @ 12-cell subaeration machine, only 10 cells active. 28.2 cu. ft. free air per min. per cell; total power per cell, 3.8 hp.; time, 30 to 40 min. For sizing-assay test see Table 81.

28. 20-ft. thickener; 4-leaf 6-ft. American filter.

29. Drag classifier; 2 @ 25-ft. thickeners; 1 @ 8-leaf 6-ft. American filter.

30. Drag classifier making sand for mine fill; overflow to slime pond.

31. 1 duplex and 1 quadruplex diaphragm pump, 51 s.p.m.

32. 2 @ 8×16-in.×47-ft. belt-bucket elevators.

Table 80. Assays of flotation products at Broken Hill South

Material *a*	Assays			Quantities		Solids, %
	Pb, %	Ag, oz. per ton	Zn, %	Gal. per min.	Tons per hr.	
Dorr thickener (21) feed	10.4	7.0	13.6	1,000 to 1,200	30 to 33	8.7
Rougher feed (22)	12.7	8.9	15.3	155 to 184	32.5 to 35.5	47.8
Rougher lead concentrate (23 *a*)	60.4	40.1	10.7	21 to 29	4.3 to 6.8	39.3
Rougher lead middling (23 *b*)	16.0	13.0	29.0	7 to 14.7	2.0 to 2.2	51.4
Lead-slime tailing (23 *b*)	0.9	0.7	14.8	139 to 157	27.5 to 28.9	43.0
Lead cleaner concentrate (26 *a*)	73.4	47.6	4.6	.....	.....	.....
Lead cleaner tailing (26 *b*)	31.1	21.6	23.6	14 to 20	1.1 to 1.3	19.3
Lead scavenger feed (25)	4.5	5.6	14.4	167	27.0 to 30.3	52.6
Lead scavenger concentrate (to 13)	34.1	44.1	23.4	.....	.....	.....
Lead scavenger tailing (to 24 *a*)	0.9	0.9	13.3	163	27.0 to 29	51.5
Mixed zinc-plant feed (24 *a*)	0.9	0.8	14.0	372 to 410	58 to 62	40.0
Rougher zinc concentrate (to 27)	1.7	1.8	49.5	91 to 129	15.3 to 19.7	37.7
Rougher zinc middling (from 24 *b*)	2.4	2.6	26.0	18 to 32	1.6 to 2.4	25.8
General tailing (from 24 *b*)	0.65	0.6	1.2	230 to 250	37 to 40	44.4
Zinc cleaner concentrate (27)	1.5	1.6	53.2	.....	12 to 13.5	52.5
Zinc cleaner tailing	2.7	2.6	21.5	50 to 63	1.5 to 2.5	18.4

a Numbers in parentheses correspond to numbered items on flowsheet, Fig. 109.

Table 81. Sizing-assay analyses at Broken Hill South *a*

Screen, mm.	Lead scavenger (25)											
	Feed				Concentrate				Tailing			
	Wgt., %	Pb, %	Ag, oz.	Zn, %	Wgt., %	Pb, %	Ag, oz.	Zn, %	Wgt., %	Pb, %	Ag, oz.	Zn, %
0.42	3.5	1.6	1.4	5.7	.....	.....	.....	.....	3.9	1.6	1.4	5.7
0.32	6.2	2.2	1.8	8.8	0.4	41.5	57.3	19.6	6.9	1.9	1.4	8.7
0.21	21.2	3.2	3.5	10.7	7.5	46.1	57.3	19.3	22.9	1.5	1.4	10.4
0.16	20.0	4.8	5.3	11.5	18.6	41.1	45.6	20.8	20.2	0.7	0.8	10.5
0.13	16.7	5.6	7.1	14.2	23.6	35.7	42.6	23.1	15.8	0.4	0.6	12.5
0.084	20.0	4.8	7.5	18.7	30.5	27.1	41.9	26.6	18.7	0.4	0.7	17.1
0.063	6.2	4.3	7.3	22.9	8.7	26.7	44.5	27.4	5.9	0.3	0.7	22.1
<0.063	6.2	8.4	8.0	24.5	10.7	40.1	41.1	19.2	5.7	1.1	0.4	25.7
Totals.....	100.0	4.5	5.6	14.4	100.0	34.1	44.1	23.4	100.0	0.9	0.9	13.3

Screen, mm.	Lead slime flotation (23, 26)											
	Feed				Concentrate				Tailing			
	Wgt., %	Pb, %	Ag, oz.	Zn, %	Wgt., %	Pb, %	Ag, oz.	Zn, %	Wgt., %	Pb, %	Ag, oz.	Zn, %
0.42	.....	.....	.....	.....	.....	.....	.....	.....	.....	.....	.....	.....
0.32	.....	.....	.....	.....	.....	.....	.....	.....	.....	.....	.....	.....
0.21	0.3	2.7	2.0	5.3	.....	.....	.....	.....	0.4	2.7	2.0	5.3
0.16	0.7	2.3	2.0	4.3	.....	.....	.....	.....	0.7	2.3	2.0	4.3
0.13	1.6	2.3	3.7	3.3	0.2	57.4	97.0	6.5	1.8	1.3	2.0	3.2
0.084	10.4	5.0	7.4	4.9	5.7	61.8	95.0	7.9	11.1	0.7	0.7	4.7
0.063	11.5	1.8	1.8	10.8	1.7	62.6	70.8	8.9	13.0	0.6	0.5	10.9
<0.063	75.5	12.6	7.6	15.4	92.4	74.4	44.1	4.3	73.0	0.9	0.7	17.5
Totals.....	100.0	10.3	6.8	13.5	100.0	73.4	47.6	4.6	100.0	0.9	0.7	14.8

Screen, mm.	Zinc flotation (24, 27)											
	Feed				Concentrate				Tailing			
	Wgt., %	Pb, %	Ag, oz.	Zn, %	Wgt., %	Pb, %	Ag, oz.	Zn, %	Wgt., %	Pb, %	Ag, oz.	Zn, %
0.42	2.1	1.5	1.3	4.8	.....	.....	.....	.....	2.8	1.5	1.3	4.8
0.32	3.4	1.6	1.6	8.5	0.7	2.0	2.6	54.1	4.3	1.6	1.6	6.1
0.21	11.0	1.2	1.4	10.3	5.7	1.4	2.6	54.7	12.7	1.2	1.2	3.7
0.16	10.8	0.7	0.8	10.9	8.2	1.2	1.9	54.9	11.7	0.6	0.6	0.7
0.13	9.3	0.4	0.7	10.6	7.1	1.0	1.9	54.9	10.0	0.3	0.4	0.2
0.084	15.6	0.3	0.3	13.2	15.1	1.0	1.6	54.6	15.8	0.3	0.4	0.2
0.063	7.8	0.5	0.6	15.0	8.6	1.1	1.3	54.5	7.6	0.3	0.3	0.3
<0.063	40.0	1.0	0.7	17.9	54.6	1.8	1.3	51.9	35.1	0.6	0.4	0.5
Totals.....	100.0	0.9	0.8	14.0	100.0	1.5	1.5	53.2	100.0	0.6	0.6	1.2

a Numbers in parentheses refer to flowsheet items.

Summary. Three-stage crushing from run-of-mine to 4-mm. Jigging and tabling for granular lead concentrate with regrind of jig tailing for tabling. Table tailing reground in one stage, open-circuit, and the sand scavenged by flotation for lead middling, which is returned to the primary grinding circuit. Slime from gravity circuits is floated for lead at 65-m.; all lead-flotation tailing (slime and scavenger sand) at <35-m. is floated for zinc. One cleaning in both circuits with cleaner tailing returned to the head of the respective rougher circuits.

The relatively high lead and zinc tailing is accepted because of the economic advantages for exceptionally high grade lead concentrate, of granular zinc concentrate, and the fact that a granular tailing is useful for required mine-fill material, which otherwise would have to be quarried. Gravity concentration is used because of the presence of a certain amount of cerussite and highly friable partially oxidized galena, which factors lower recovery in all-flotation treatment. It is economically possible because of coarse dissemination of both sulphides.

Substantially the same flowsheet is used at NORTH BROKEN HILL, working on a similar ore, and approximately the same results are achieved.

Zinc Corporation, Ltd. Fig. 110 (Staff, *Tref 2/39; 32 CEMR 27*).

Location: Broken Hill, N. S. W., Australia.

Ore: Galena and sphalerite in rhodonite, garnet, quartz, calcite, and fluorite.

Assays: Feed: 15.5% Pb, 4 oz. Ag, 10% Zn; lead concentrate: 77% Pb, 17 oz. Ag, 3.6% Zn; zinc concentrate, 53.5% Zn, 0.8 oz. Ag, 1.2% Pb; tailing: 0.55% Pb, 0.2 oz. Ag, 1.1% Zn.

Recovery: 96.6% Pb; 93.0% Ag; 86% Zn.

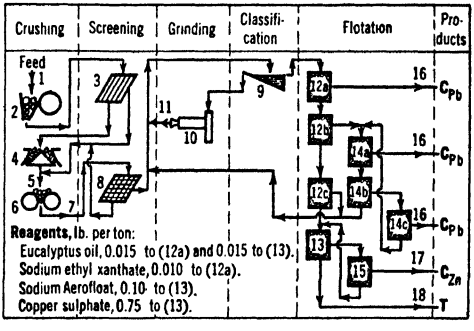

Legend for Fig. 110:

1. 7-ton automatic skips; 250-ton bin; chain feeder.

2. 1 @ 36×48-in. jaw crusher, 9-in. set.

3. 1 @ 15-ft. vibrating feeder, last 4 ft. a grizzly with 1 1/2-in. spacing; suspended magnet.

4. 1 @ 5 1/2-ft. standard cone crusher, 1 1/4-in. set.

5. 1 @ 30-in. conveyor, 250 f.p.m.; 1 @ 30-in. conveyor with traveling tripper, 250 r.p.m.; 3 @ 1,200-ton bins; 6 @ 18-in.×5-ft. vibrating feeders; 3 @ 18-in. belt conveyors with weightometers.

6. 3 @ 36×18-in. gear-driven Cornish rolls, 17 r.p.m.

7. 3 elevators.

8. 3 @ 4×5-ft. electric vibrating screens, 3-mm. aperture.

9. 3 @ 6×25 1/2-ft. rake classifiers, 2 3/8-in. slope per ft.; overflow 50% solids, 50% <200-m.

10. 3 @ 8×6-ft. ball mills, 22 r.p.m., 2 3/8-in. hard-iron balls.

11. 3 @ 14-in. pipe conveyors.

12. 3 @ 12-cell No. 21 Denver Sub-A flotation machines in parallel; *a* = cells 1 to 5, *b* = cells 6 to 8, *c* = cells 9 to 12.

13. 3 @ 12-cell No. 21 Denver Sub-A flotation machines in parallel.

14. 1 @ 4-cell No. 21 Denver Sub-A flotation machine; *a* = cell 2, *b* = cells 3, 4; *c* = cell 1.

15. 1 @ 8-cell No. 21 Denver Sub-A flotation machine.

16. 2 agitator-type surge tanks, 2 @ 6-leaf 6-ft. disk filters delivering cake (5.7% moisture) to railway cars.

17. 1 agitator-type surge tank, 2 @ 6-leaf 6-ft. disk filters discharging cake (7.7% moisture) to railway cars.

18. 2 rake classifiers, sand to 36-in. slow-moving drainage belt (to 19% moisture) and conveyor to storage for mine fill; overflow to thickeners and thence to slime pond.

FIG. 110. ZINC CORP.

Summary. Three-stage crushing to 3-mm.; one-stage closed-circuit grinding to 48-m.; differential all-flotation concentration with two-stage cleaning for lead and one for zinc.

This is the third of the large plants at Broken Hill; it departs from the North and South plant practices by omitting gravity concentration, making a slightly finer grind before flotation. Results are definitely better than at the other plants.

Cía. Industrial "El Potosí," S. A. Fig. 111 (*Q* by C. A. Mehring, Mill Sup't; *IC 6706*).

Location: Chihuahua, Chihuahua, Mex.

Ore: Approximate composition: Ag, 8 oz. per ton, Pb, 10.5%; Zn, 10%; Fe, 30%; CaO, 9%; insol. 5%. Principal minerals are galena, marmatite, pyrrhotite, and pyrite with minor amounts of limestone and silicates.

Capacity: 2,900 tons per 24 hr.

Assays: See Table 82.

Table 82. Assays of products at El Potosí

Material	Percentages					Oz. per ton
	Pb	Zn	Fe	S	Insol.	Ag
Feed.....	10.5	10	30	.....	5	8
Lead conc..	65.15	3.95	9.0	17.4	1.2	46.34
Zinc conc..	.....	48.0	.....	.....	.....	.....
Tailing....	0.17	1.99	.....	.....	.....	0.60

Recovery: Ag, 92.3%; Pb, 98.2%; Zn, 80.2%.

Ratio of concentration: Pb, 6.39 : 1; Zn, 6.05 : 1.

Labor: Mexican and foreign. Tons per man-shift, total, 22.35; percentage distribution of labor: foreman, 2.7; crushing, 5.5; grinding and classification, 8.2; flotation, 5.5; sampling, 2.7; filtering, 10.9; miscellaneous, 64.5.

Running time: 98.9%. Principal causes of loss: grinding mills and classifiers; power interruptions.

Water: Pumped 9 mi. from wells through 8-in. line against a total head of 450 lb. at 9.5 kw-hr. per 1,000 gal.; 43.1% reclaimed. Net CONSUMPTION, 1.12 tons per ton of ore.

Building: Steel, concrete floors sloping 3/8 in. per ft. in wet parts. Unheated. Sloping site.

Machinery handling: 10-ton hand crane in coarse crushing; 20-ton hand and 8-ton electric cranes in grinding; 10-ton electric in concentration.

Power: Purchased. Comes 90 mi. at 110,000 volts. Motors, 2,200- and 450-volt. CONSUMPTION, 14.6 hp-hr. per ton milled. Percentage distribution: crushing and conveying to fine-ore bins, 3.6; grinding and classification, 40.3; flotation machines, 33.5; thickening, 4.1; sand pumps, 5.7; water pumping, 7.4; lighting, 2 7; assaying, 1.0; conveying in concentrator, 1.7.

Transport: Company railroad. Ore comes 6 mi. by electric train. Lead concentrate shipped by electric trams 8 mi. to A.S. & R. Co. smelter; zinc, 9 mi. to connecting rail, and thence to European smelters.

Tailing flows 1,000 ft. through a 12-in. launder to a 6-in. Wilfley pump which elevates and pumps it 500 ft. along one side of a tailing pond to a second 6-in. pump which elevates and pumps 1,225 ft. along the other side of the pond to a third 6-in. pump which elevates and pumps 1,100 ft. along the face of the dam. Pulp is bled off from the pump lines to build the dam walls.

Costs (July, 1932): Crushing, $0.017; grinding, 0.157; flotation, 0.189; concentrate handling, 0.029; water, 0.026; tailing disposal, 0.011; other expense, 0.075; total $0.504.

Legend for Fig. 111:

1. 36×24-in. jaw crusher at mine.

1a. In order: Electric railroad, 6 mi.; 2 coarse-ore bins, 2,600 tons total capacity; 1 @ 18-in. and 1 @ 24-in. apron feeder; 1 @ 24-in. belt conveyor; 1 @ 24-in. inclined belt conveyor with Merrick weightometer and 24-in. Dings bipolar suspended magnet.

2. 1 @ 4×5-ft. Hum-mer screen, 1/2× 1-in. openings.

3. 24-in. belt conveyor.

4. 1 @ 5 1/2-ft. standard cone crusher, 3/8-in. set.

5. In order: 1 @ 24-in. belt conveyor, 1 @ 18-in. inclined-horizontal distributing belt conveyor, 1 @ 600-ton, 20(diam.)× 28-ft. and 1 @ 500-ton, 20(diam.)×23-ft. ore bin in parallel; 2 @ 18(diam.)×12-in. drum feeders in parallel (one on each bin), 1 @ 12-in. and 1 @ 14-in. belt conveyor in parallel (one from each bin), each with one Merrick weightometer; 1 @ 12-in. belt conveyor.

6. 6 rod mills in parallel, as follows: 4 @ 6× 12-ft. Cole-Bergman; 2 @ 5×12-ft. Marcy.

7. 4 @ 6×27-ft. heavy-duty rake classifiers. Each Marcy has an individual classifier, the Cole-Bergman mills have one classifier to two mills.

8. 1 @ 6-in. Wilfley sand pump; 1 @ 4-way revolving-tank distributor. 45% solids.

9. 4 @ 14-cell 18-in. M-S Subaeration flotation machines in parallel; 325 r.p.m., cast-iron impellers, life 100 da.; cast-iron liners, life 500 da.; air at 3-lb per sq. in., temperature according to season, 14-min. time-factor, 50% solids, *p*H 8.1.

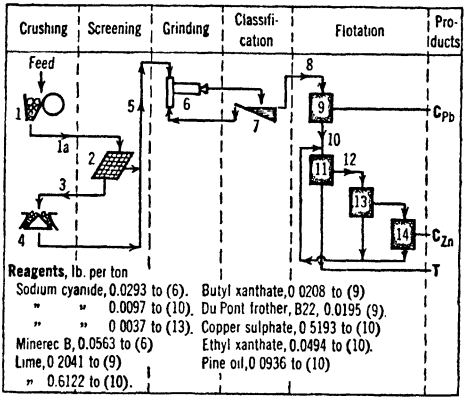

10. 1 @ 4-in. Wilfley sand pump, 1 @ 4-way revolving-tank distributor.

11. 4 @ 3-cell 56-in. Fagergren machines (2 @ 12-cell 24-in. M-S standard machines in reserve). 500 r.p.m. Rubber-covered rotor, life 220 da.; rubber-covered stator, life 400 da. 5-min. time-factor. Rough concentrate, 43% Zn.

12. 1 @ 2-way splitter.

13. 1 @ 3 cell 56-in. Fagergren machine. 500 r.p.m. Rubber-covered rotor and stator, lives 350 and 550 da. respectively. 6-min. time-factor, 35% solids, *p*H 8.1. Concentrate, 47% Zn; tailing, 28% Zn.

14. 1 @ 3 cell 56-in. Fagergren machine. 6-min. time-factor, 35% solids, *p*H 8.1; tailing, 30% Zn.

FIG. 111. CÍA. INDUSTRIAL "EL POTOSÍ".

Summary. Crushing from run-of-mine to <1/2-in. rod-mill feed in two stages comprising a jaw crusher and a cone. Grinding to 22% >65-m. in one stage with rod mills in closed circuit. All-flotation differential concentration, in two stages on the primary pulp stream, making finished lead concentrate directly off the primary stream, while zinc concentrate is cleaned twice.

Compañía Minera de Peñoles, S. A. Fig. 112 (*Q* by Irving M. Symonds, Mill Sup't; *153 A 623*).

Location: Avalos, Zacatecas, Mex.

Ore: Pb, 8 to 14% as galena; Zn, 14 to 25% as sphalerite; Fe, 20 to 35% as pyrite; insol., 1 to 2%; limestone, balance; composite from company ores, ores from leased mines, and some custom ore. Dissemination coarse.

Capacity: 600 tons per 24 hr.

Assays: See Table 83.

Recovery: See Table 83.

Table 83. Assays and recoveries at Cía. Minera de Peñoles (1941)

Material	Assays				Recoveries, per cent.			
	Au, oz. per ton	Ag, oz. per ton	Pb, per cent.	Zn, per cent.	Au	Ag	Pb	Zn
Feed	0.013	7.15	7.6	17.3	100	100	100	100
Lead conc.	0.065	61.3	69.5	5.3	52.5	90.7	97.3	3.3
Zinc conc.	0.004	0.90	0.45	60.9	8.8	3.4	1.6	93.0
Tailing	0.008	0.67	0.14	1.03	38.7	5.9	1.1	3.7

Ratio of concentration: Pb, 6.5 : 1; Zn, 4.0 : 1.

Labor: Mexican. Tons per man-shift: operating, 6.5; repairs, 2.8.

Running time: 90%; principal cause of loss is general repairs.

Water pumped 2.7 mi.; 10 hp. installed; pump run 8 to 12 hr. per day. CONSUMPTION: 2.5 tons per ton milled. None reclaimed.

Building: Steel and wood on a slightly sloping site; concrete floors slope 1/2 in. per ft. in wet part; unheated.

Machinery handling by chain blocks throughout.

Power: Generated at plant at 2,300 volts; motors, 440-volt, 60-cycle. CONSUMPTION (Aug. 1941): Crushing, 1.2; grinding and classifying, 9.6; concentration, 9.0; concentrate dewatering, 1.6; tailing disposal, 1.4; miscellaneous, 1.3; total, 24.3 hp.

Transport: Aerial tram from mine to mill; lead concentrate 125 mi. by rail to smelter; zinc concentrate to United States.

Tailing: Pumped to tailing dam built by discharge from pipe at 6-ft. intervals around face, with manual shaping.

Legend for Fig. 112:

1. <3-in. product to 7 cable-station ore bins (capacity 500 tons); 26-in. belt conveyor with 30-in. Dings magnetic head pulley.

2. 4-ft. type 33 Hum-mer screen, 5/8-in. sq. aperture.

3. 6-in. gyratory set to crush to <7/8-in. Capacity 200 to 250 tons per shift, according to moisture content.

4. 18-in. belt conveyor; 12-in. bucket elevator.

5. 4-ft. type 33 Hum-mer with two vibrators, 3/8-in. sq. aperture. Finer crushing would be desirable from the standpoint of grinding.

6. 30×14-in. A-C rolls.

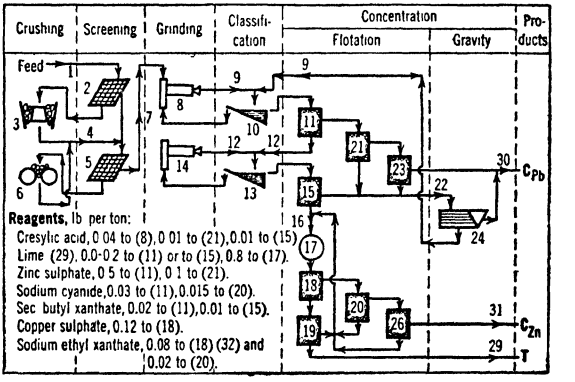

7. Automatic sampler; 16-in. belt conveyor; 6 fine-ore bins (capacity 375 tons live; lack of storage here makes blending inadequate and feed assay varies greatly); 6 belt feeders; 18-in. belt conveyor.

8. 1 @ 5×10-ft. Marcy rod mill, 21 r.p.m. Discharge opening closed to 12-in. diam. 2 1/2-in. carbon-steel rods. Manganese-steel liners, life 550 to 600 da. on shell and feed end, 200 to 300 da. at discharge end; 0.11 lb. total per ton, cost 1.5¢ per ton.

9. 4-in. Wilfley pump.

10. 4 1/2-ft. light-duty rake classifier, 24 s.p.m. Overflow, 21% >65-m., 36% <200-m. Sands drawn in large part (85 to 90%) from 14 or 16 @ 1-in. pipes through bottom under rakes, at 80% solids.

11. 1 @ 8-cell 18-in. M-S special subaeration machine (Fig. 112*A*). *p*H at head, 7.9 to 8.2. Temp. varies between 50 and 75° F. 46% solids.

12. 4-in. Wilfley pump.

13. 6-ft. rake classifier, 22 s.p.m.

14. 5×8-ft. Marcy ball mill, 12-in. discharge opening 27 r.p.m. 2-in. cast-iron balls. Manganese-steel liners, 0.10 lb. per ton.

15. 8-cell M-S subaeration machine (Fig. 112*A*).

16. 3-in. Wilfley pump.

17. 8×12-ft. conditioning tank.

18. 1 @ 9-cell M-S subaeration machine. *p*H at head, 9.4 to 9.8. 35% solids. *p*H of tailing, 9.0 to 9.6.

19. 4-cell M-S subaeration machine.

20. 5-cell machine, as (19).

21. 3-cell M-S subaeration machine. 20 to 25% solids.

22. 3-in. Wilfley pump.

23. As (21).

24. 2 Wilfley tables.

25. 4-cell M-S standard flotation machine. 20 to 25% solids.

26. 4-cell machine, as (19).

27. 5 cells.

28. 2-in. Wilfley pump.

29. 2 @ 3-in. Wilfley pumps in series to tailing dam.

FIG. 112. CÍA. MINERA DE PEÑOLES.

Legend for Fig. 112—Continued:

30. 5 1/3×6-ft. Oliver filter; tank overflow to 18-ft. Dorr thickener returning spigot product to filter. Cake to R.R. cars with about 5.3% water.

31. As (30).

32. 1/3 to 1/2 of this often added about half-way along cell.

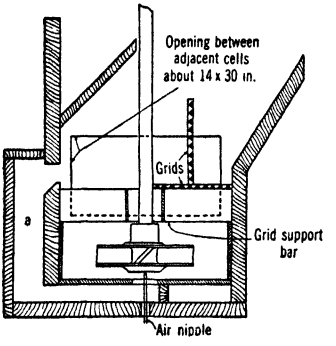

Note to Fig. 112A. A Hebbard-type subaeration machine was modified by addition of the enclosed circulating launder *a*. Bottom of weir to launder is 16 in. above bottom liner. Tailing overflow weir is about one-half usual width. Thus modified, the cell does not choke. Air-lift machines were entirely unsatisfactory with the heavy sulphide ore treated here; they clogged badly and produced high-assay tailing.

FIG. 112A. Hebbard-type subaeration machine at PEÑOLES.

Summary. Three-stage crushing from run-of-mine to <3/8-in., the last stage in closed circuit with a screen. Concentration essentially all-flotation with rougher-scavenger flow on the primary run for both lead and zinc, and one cleaning of primary rougher concentrate. A table is used on once-floated lead middling (cleaner tailing and scavenger froths) to remove difficultly floatable lead mineral before recirculation to the grinding mill.

Pend Oreille Mines & Metals Co. Fig. 113 (*141 #3 J 29*).

Location: Metaline Falls, Wash.

Ore: Coarsely disseminated galena-sphalerite (substantially free at 48-m.) in quartz-dolomite gangue, with some pyrite.

Capacity: 750 to 850 tons per 24 hr.

Assays: Feed: 1.65% Pb; Zn, 4.46%; Fe, 0.6%. Concentrate and tailing, see Table 84.

Recovery: See Table 84.

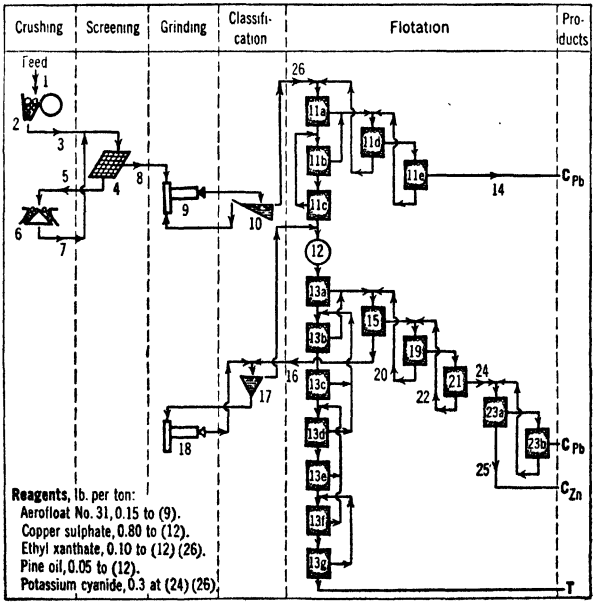

FIG. 113. PEND OREILLE M. & M. CO.

Legend for Fig. 113:

1. 200-ton bin; Ross feeder.
2. 1 @ 15×36-in. jaw crusher.
3. Conveyor.
4. 1 @ 4×8-ft. A-C screen, 1/2-in. aperture.
5. Conveyor.
6. 1 @ 4-ft. standard cone.
7. Elevator.
8. Conveyor; shuttle conveyor, 2 @ 600-ton bins, 2 feeders.
9. 2 @ 7×6-ft. A-C ball mills; 1 @ 8-ft. ×48-in. Hardinge ball mill.
10. 1 @ 7×16-ft. Hardinge classifier; 1 @ 60-in. Akins classifier.
11. 2 @ 10-cell United Iron Works flotation machines; (*a*) = cells 3 and 4, (*b*) = cell 5, (*c*) = cells 6 to 10, (*d*) = cell 2, (*e*) = cell 1.
12. 10×10-ft. conditioner.
12*a*. 1 @ 4-in. Wilfley pump.
13. 2 @ 12-cell Denver flotation machines; (*a*) = cell 1, (*b*) = cells 2, 3, (*c*) = cell 4, (*d*) = cells 5, 6, (*e*) = cell 7, (*f*) = cells 8, 9, (*g*) = cells 10 to 12.
14. 1 1/2-in. Denver vertical pump; 1 @ 2-disk American filter.
15. 1 @ 10-ft. Southwestern flotation machine.
16. 1 @ 2-in. United Iron Works pump.
17. 1 @ 8-ft. desliming cone with 2-in. diaphragm pump.
18. 1 @ 4×4-ft. ball mill.
19. 1 @ 10-ft. Southwestern flotation machine.
20. 1 @ 2-in. United Iron Works pump.
21. 1 @ 10-ft. Southwestern flotation machine.
22. 1 @ 2-in. United Iron Works pump.
23. 6-cell @ 30-in. Weinig flotation machine; (*a*) = cells 2 to 6, operated for high-grade concentrate rather than maximum lead recovery. Much pyrite also floats here. (*b*) = cell 1.
24. Bucket elevator; 4-disk American filter, water to waste; 6×6-ft. conditioner, fresh water added; 1 @ 2-in. United Iron Works pump; density controller; 3×3-ft. mixing tank, fresh water added; density controller. Dilution at first density control is held at 25% solids; at second, 16%.
25. 2-in. United Iron Works pump; 1 @ 20-ft. thickener with 3-in. diaphragm pump; 4-disk American filter. Copper sulphate added ahead of the thickener as a coagulant.
26. 48 to 55% <200-m., according to dissemination of zinc. No reagents are needed at this point to depress zinc.
27. When feed is high in pyrite, sodium Aerofloat is substituted.
28. One-half added to the filter and the balance at the head of the rougher de-leader. About 4 to 5 lb. per ton of concentrate.

Table 84. Effects of de-leading operation at Pend Oreille

Product	Weight, per cent.	Assays, per cent.		Recovery, per cent.	
		Pb	Zn	Pb	Zn
WITHOUT DE-LEADING: *a*					
Lead conc.	1.86	81.82	0.38	92.1	0.2
Zinc conc.	6.56	2.00	62.27	7.9	91.6
Plant tailing.	91.58	*b* 0.18	0.40	.....	8.2
WITH DE-LEADING:					
Lead conc.	1.86	81.82	0.38	92.1	0.2
De-leading float.	0.19	60.00	9.53	6.8	0.4
Total lead conc.	2.05	80.00	1.27	98.9	0.6
De-leaded zinc.	6.37	0.31	63.81	1.1	91.2
Plant tailing.	91.58	.....	0.40	.....	8.2

a Taking finished zinc concentrate from Cell 21 (see flowsheet).
b Including loss in zinc concentrate.

Summary. Two-stage crushing to <1/2-in.; second stage in closed circuit. One-stage closed-circuit primary grind with regrind of zinc primary-cleaner tailing. All-flotation differential concentration comprising 3-stage rougher-scavenger, flow for lead, with 2-step cleaning; and for zinc 7-stage roughing and scavenging, with 3-stage middling counterflows, and 3-step primary cleaning followed by 2-step de-leading of zinc concentrate.

De-leading was developed at this plant to decrease the lead content (2%) of the thrice-cleaned zinc concentrate. This lead comprised substantially 8% of the total lead in the ore, and was penalized when in excess of 1.5% in zinc concentrate. The lead is fine, free, but slow-floating, and would not come up in the lead circuit either with increase in conditioning or flotation time or with any allowable reagent manipulation; neither was it found possible to depress it from zinc concentrate. The principal operating difficulty lay in uncontrollable frothing; the addition of half of the cyanide necessary for zinc depression before filtration was the solution of this difficulty. For performance see Table 84. The lead float is 2.8% of the feed to de-leading; substantially 80% of the lead in the de-leaded zinc is in the <200-m. slime. Economic benefits (Oct., 1939) were an increase of $0.07 per ton of feed from additional lead recovery (6.8%) despite a drop (81.8 to 80.0) in grade of lead concentrate, and $0.09 per ton from higher grade of zinc concentrate (63.8 *vs.* 62.3) despite a drop (91.6 to 91.2) in zinc recovery. Increased cost was $0.06 per ton of feed.

This flowsheet represents the ultimate yet reached in point of grade of concentrate and recovery; the cost analysis presented indicates definite economic advantage under the smelter contracts prevailing.

Trepca Mines, Ltd., at Zvecan, Yugoslavia (*17 MMt 584*), treats 1,800 to 2,000 metric tons of ore per 24 hr. by 3-stage crushing to 1/4-in. in jaw crusher, standard cone and short-head cone, with scalping screens ahead of the first two stages and a closing screen on the final stage; one-stage closed-circuit grinding, and differential flotation as in Fig. 114. Results in 1935 were as in Table 85.

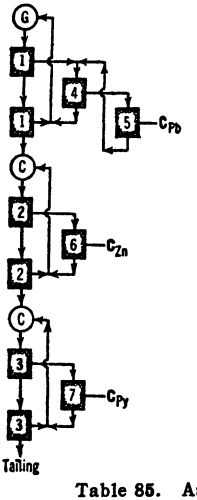

Legend for Fig. 114:

1. 3 @ 16-cell 21-in. Denver Sub-A machines in parallel.
2. 2 as (1) in parallel.
3. 1 as (1).
4. 1 Denver Sub-A cleaner.
5. 1 Denver Sub-A recleaner.
6. 1 @ 8-cell 21-in. Denver Sub-A machine.
7. 2 @ 10-ft. Forrester machines in parallel.

C. Conditioners.
G. Grinding circuit.
Reagents were standard.

FIG. 114. TREPCA MINES flotation circuit.

Table 85. Assays and recoveries at Trepca Mines

Material	Assays					Recovery, %		
	Pb, %	Ag, oz.	Zn, %	S, %	Insol., %	Pb	Ag	Zn
Feed	9.1	2.9	8.6	.....	10	.....	.....	.....
Lead conc	79.9	24.1	1.1	.....	0.4	95.8	89.8	.....
Zinc conc. *a*	0.7	.....	50.1	.....	1.2	.....	.....	91.6
Pyrite conc	.....	.....	0.4	50.8	.....	.....	.....	.....

a Zinc mineral is marmatite assaying 54 to 55% Zn.

Lead and zinc concentrates were shipped *via* Salonika to western European smelters and pyrite *via* Danube to central Europe.

This plant, by reason of long concentrate hauls, is forced to make exceptionally high grade concentrate; it manages to do so and yet attain fair lead-silver and excellent zinc recoveries.

St. Joseph Lead Co., Edwards Division. Fig. 115 (*Q; IC 6574*).

Location: Edwards, N. Y.

Ore: Massive mixture of pyrite and sphalerite with some galena in gangue of calcite, dolomite, quartz, and other silicates. Sphalerite contains about 5% Fe. The ore is moderately hard.

Table 86. Assays at Edwards mill

Material	Assays, per cent.		
	Zn	Pb	Fe
Feed	8.25	1.05	12.45
Lead conc	.....	61.72	.....
Zinc conc	56.16	.....	.....
Iron conc	.....	.....	41.58
Tailing	2.2	.....	6.9

Capacity: 1,250 tons per 24 hr.

Assays: See Table 86.

Recovery: Zinc, 90.3%; Pb, 63.6%; Fe, 84.1%.

Ratios of concentration: Zn, 7.4; Pb, 90.8; Fe, 3.9.

Water pumped 4,000 ft. from a lake at an expenditure of 70 hp. to a 100,000-gal. storage tank above the mill; water CONSUMED, 2.9 tons per ton of ore; no recovery.

Power purchased; comes 15 mi. at 23,000 volts; motors, 2,300- and 220-volt, 60-cycle; motor-generator set for magnets and excitation of synchronous motors. CONSUMPTION, 24.5 hp-hr. per ton.

Labor: American. 34.5 tons per man-shift operating.

Running time: 99.64%; 6-day week. Loss due principally to repairs and power failures.

Building: Sloping site. Steel frame; enclosure, J-M insulation board and J-M corrugated Transite Cement floors; slope 1/4 in. per ft. in wet portion. Heated.

Machinery handling: Chain blocks on rails.

Tailing disposal: Pumped by 6-in. Wilfley pump 2,100 ft. through 8-in. wood-stave pipe.

Distances: Mine to mill, 500 ft. by conveyor; mill to smelter, 450 mi.; railroad at plant.

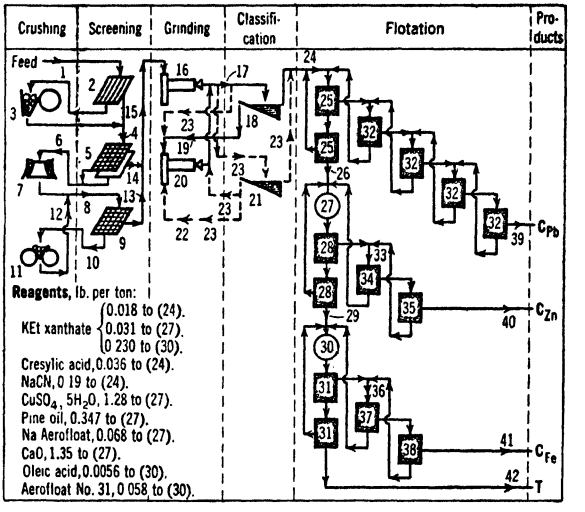

Legend for Fig. 115:

1. 10-in. grizzlies in mine; 1 @ 275-ton (live) ore bin; 1 @ 3×7 1/2-ft. Robins "Oro" steel apron feeder; 3-hp. variable-speed motor with 300 : 1 gear speed-reducer, and 1 @ 2 1/2×5 1/6-ft. Stephens-Adamson self-contained steel apron feeder, 5-hp. motor with 19.5 : 1 gear speed-reducer; adjustable ratchet-and-pawl drive giving head-shaft speeds from 4.9 to 1.6 r.p.m. to 1 @ 3×16-ft. belt conveyor, slope 4 3/8 in. per ft., 136 f.p.m., 5-hp. motor with 60 : 1 gear speed-reducer.

2. 1 @ 2 3/4×6-ft. fixed grizzly; slope, 45°; 2 3/8-in. spacing.

3. 1 @ 24×36-in. Superior jaw crusher, 3-in. open setting, 210 r.p.m., 75-hp. motor (70 hp. consumed), belt drive.

4. 1 @ 24-in.×41-ft. belt conveyor, +15° slope, 125 f.p.m., 7.5-hp. motor with 43.5 : 1 gear speed-reducer; 1 @ 24-in.×476-ft. belt conveyor (inclined), 225 f.p.m., with 1 @ 39-in. suspended magnet; 20-hp. motor with 37 : 1 gear speed-reducer.

5. 1 @ 4×6-ft. 2-deck Niagara screen, 1 1/2- and 1/2-in. apertures; 5-hp. direct-connected motor.

6. 1 @ 18-in.×31-ft. belt conveyor (level), 202 f.p.m., 2-hp. motor with 30 : 1 gear speed-reducer; 1 @ 5-ton surge bin.

7. 2 @ 6-in. A-C Superior fine-reduction gyratory crushers, set 1 1/8-in., 390 r.p.m., 50-hp. motors (28 hp. actual).

8. 1 @ 8×16-in.×50-ft. belt-bucket elevator, 397 f.p.m., buckets spaced 16 to 18 in., 30-hp. motor (11 hp. actual).

9. 3 @ 4×6-ft. Niagara screens, 1/2-in. aperture, 3-hp. motors with cog-belt drives.

10. 1 @ 24-in.×40-ft. belt conveyor (level), 220 f.p.m., 5-hp. motor with speed-reducer (29 : 1).

11. 1 @ 57×18-in. Traylor rolls, 90 r.p.m., set 1/4-in., 2 @ 75-hp. motors (45 hp. actual).

12. 1 @ 24-in.×31-ft. belt conveyor (inclined), 188 f.p.m., 3-hp. motor with speed-reducer (29 : 1).

13. 2 @ 16 (diam.)×20-ft. 250-ton storage bins; 2 @ 24-in.×8-ft. belt feeders, 32 f.p.m., 1-hp. motors with speed-reducers (60 : 1).

14. 1 @ 18-in. belt conveyor, 152 f.p.m., 2-hp. motor with speed reducer (40 : 1); 1 @ 23-ft. diam. 700-ton bin; 1 @ 24-in. belt conveyor, 101 f.p.m., 3-hp. motor with speed-reducer (60 : 1).

15. 1 @ 18-in.×39-ft. belt conveyor (inclined), 184 f.p.m., 5-hp. motor with speed-reducer (29 : 1); Merrick weightometer; 1 @ 18-in.×29-ft. belt conveyor (level), 91 r.p.m., 2-hp. motor with speed reducer (15 : 1); 1 Geary-Jennings sampler with 1/4-hp. motor.

16. 1 @ 6 1/2×12-ft. A-C rod mill, 70,000 lb. @ 2-in. rods, 16 1/2 r.p.m., 240-hp. motor (177 hp. actual) with speed reducer (3.4 : 1) and magnetic clutch.

17. Sump; 1 @ 4-in. Wilfley pump, 900 r.p.m., 20-hp. motor.

18. 1 @ 8 (diam.)×20-ft. Hardinge classifier, slope 1 in. per ft., 0.9 to 2.7 r.p.m., 15-hp. motor with speed-reducer, Reeves variable-speed transmission.

19. 1 @ 16-in.×11 1/2-ft. screw conveyor, slope 1 1/2 in. per ft., 59 r.p.m., 15-hp. motor with speed-reducer (29 : 1).

20. 1 @ 6×8-ft. A-C ball mill, 26,000 lb. balls, 23 r.p.m., 125-hp. motor.

21. 1 @ 8×30-ft. rake classifier, slope 3 1/4 in. per ft., 27 s.p.m., 10-hp. motor (8.5 hp. actual).

22. Sump; 1 @ 4-in. Wilfley pump, 900 r.p.m., 20-hp. motor.

23. Alternative flows.

24. Sump; 1 @ 6-in. Wilfley pump, 900 r.p.m., 50-hp. motor (28 hp. actual); 1 @ 3-way distributor.

25. 3 @ 36-ft. St. Joe matless cells in parallel, 48 @ 3-in. down-pipes drawn down to 1/4-in. vent slots; each with 1 @ 4,200-c.f.m. centrifugal fan direct-connected to 1 @ 40-hp. induction motor, 350 r.p.m.; 1 1/2 lb. per sq. in. pressure; pH = 9.0.

26. 1 Galigher No. 2 automatic sampler, cut interval 3 min., 1/4-hp. motor; sump; 1 pump as (24).

27. 1 @ 12×12-ft. Denver conditioner, 162 r.p.m., active volume = 1,357 cu. ft., 5-hp. motor, Tex-rope drive; 1 @ 10 (diam.)×12-ft. Denver conditioner, 208 r.p.m., 942 cu. ft. live capacity, 5-hp. motor.

28. 5 @ 36-ft. St. Joe machines in parallel as (25), but with 2 @ 27-hp. and 3 @ 30-hp. motors delivering 1-lb. air; pH = 9.8.

29. As (26).

30. 3 @ 12×12-ft. Denver conditioners (as 27) in series.

31. 5 @ 36-ft. St. Joe machines in parallel, as (25) but with 4 @ 27-hp. and 1 @ 30-hp. motors; pH = 9.8.

32. 4 @ 1-cell Denver Sub-A machines, 250 r.p.m., 5-hp. motors (3.8 hp. actual).

33. Sump; 1 @ 4-in. Wilfley pump, 900 r.p.m., 20-hp. motor (13.9 hp. actual).

FIG. 115. ST. JOSEPH LEAD CO., Edwards.

Legend for Fig. 115—Continued:

34. 2 @ 2-cell Denver Sub-A machines in parallel.

35. As (34).

36. As (33) but 15-hp. motor (13.8 hp. actual).

37. As (34).

38. As (34).

39. 1 Galigher sampler; 2 @ 400-cu. ft. and 1 @ 500-cu. ft. storage tanks; sump; 1 @ 2-in. Wilfley pump, 5-hp. motor; 1 @ 8×14-ft. Dorrco filter, 1/6 r.p.m., 3-hp. motor (2.7 hp. actual) with speed reducer (29 : 1); 1 @ 16-in.×22-ft. belt conveyor (level), 242 f.p.m., 5-hp. motor with speed reducer (19 : 1); 1 belt conveyor 61 ft. long (50 ft. inclined, 11 horizontal), 93 f.p.m., 3-hp. motor with speed-reducer (60 : 1); 1 @ 15-ton hopper; 1 S-A box-car loader, 3-hp. motor, capacity 2 cars per hr.; railway box car, 8% moisture.

40. 1 @ 12×16-ft. Dorrco filter, 1/6 r.p.m., 5-hp. motor with speed-reducer (22 : 1); 1 @ 16-in.× 9-ft. belt conveyor (level), 120 f.p.m., 2-hp. motor with speed reducer (50 : 1); 1 @ 54-in.×26-ft. Ruggles-Coles type A4 drier, 7 1/2 r.p.m., 15-hp. motor (13.3 hp. actual) with speed reducer (15 : 1); 1 @ 16-in.×79-ft. belt conveyor (50 ft. inclined, balance level), 93 f.p.m., 3-hp. motor with speed reducer (60 : 1); 1 Galigher sample, 15-min. cut interval; 1 @ 15-ton hopper; 1 box-car loader; railway box car, 3.5% moisture.

41. 1 @ 12×16-ft. Oliver filter, 0.21 r.p.m., 5-hp. motor; 1 @ 16-in.×30-ft. conveyor (16 ft. at +1 1/2 in. per ft. slope, balance level), 120 f.p.m., 2-hp. motor with speed-reducer (50 : 1); 1 @ 16-in.×18-ft. belt conveyor (level), 120 f.p.m., 2-hp. motor with speed-reducer (50 : 1); 1 @ 5×35-ft. Ruggles-Coles drier, 7 r.p.m., 15-hp. motor (13.3 hp. actual) with speed reducer (15 : 1); 1 @ 16-in.×96-ft. conveyor (59 ft. inclined, balance level), 93 f.p.m., 3-hp. motor with speed reducer (60 : 1); 1 sampler as in (40); 1 @ 15-ton hopper; 1 car loader as in (39); railway box car, 3.5% moisture.

42. 1 sampler as in (40); sump; 1 @ 6-in. Wilfley pump, 900 r.p.m., 40-hp. motor (29 hp. actual).

Summary. Three-stage crushing from run-of-mine to <1/2-in.; two-stage grinding, the first an open-circuit rod mill, the second a closed-circuit ball mill; all-flotation three-mineral differential flotation with two-stage rougher-scavenger flow for each mineral, four cleanings for lead and two each for zinc and iron.

Zinc is the primary mineral at this plant; grade of concentrate must be kept high on account of long concentrate haul; recovery is creditable in view of this limitation and the relatively fine dispersion of the zinc-pyrite intergrowth.

Consolidated Mining & Smelting Co. of Canada, Ltd. Fig. 116 (*Q* by R. W. Diamond, Ass't Gen'l Sup't).

Location: Kimberley, B. C.

Ore, approximate composition: Percentages: PbS, 11.6; marmatite (FeS_8ZnS), 10.3; FeS_2, 4.0; Fe_7S_8, 55.6; SiO_2, 10.4; Al_2O_3, 3.1; CaO, 1.2; MgO, 1.3; MnO_2, 0.65. This is a heavy finely complex sulphide ore with small amounts of calcite and silicates; it is brittle and grinds readily to 100-m. but is difficult below this size.

Capacity: 6,500 tons per 24 hr.

Assays: See Table 87.

Table 87. Assays of products, Consolidated Mining & Smelting Co. of Canada

Material	Assays, %			Distribution, %		
	Pb	Zn	Fe	Pb	Zn	Fe
Feed	10.4	6.5	35.7	100.0	100.0	100.0
Lead conc	71.0	3.2	6.4	91.0	6.6	2.4
Zinc conc	3.3	51.2	11.2	3.5	87.5	3.5
Tailing	0.75	0.5	44.5	5.5	5.9	94.1

Recovery: Pb, 85%; Zn, 84.5%.

Ratio of concentration: 4 : 1 on total concentrate.

Labor: Mostly British. Tons per man-shift: operating, 24.9; repairs, 266.3.

Running time: 93%. Principal causes of loss are repairs and smelter requirements.

Water: Creek supply, 4 mi. through wood-stave pipe, gravity flow; re-use, 40%; net CONSUMPTION, 2.0 tons per ton milled.

Building: Steel and Gunite; cement floors sloping 1/4 in. per ft. in wet part. Steam heat in severe weather. Sloping mill site.

Machinery handling: Power cranes throughout, supplemented by hand cranes in concentrator.

Power: Hydroelectric; purchased. Comes 75 mi. at 66,000 volts. Three @ 1,850-k.v.a. steam turbines at plant for stand-by; used about 20% of year when water is low. Motors, 550-volt, 60-cycle. CONSUMPTION, 29.52 hp-hr. per ton milled.

Transportation: C.P.R.R. at mill serves for both ore and concentrate. Ore comes 2 3/4 mi. in 70-ton gondolas; concentrate shipped 200 mi. to smelter at Trail.

Tailing: Impounded in connected tailing dams; water runoff regulated by spillways.

Summary. Four-stage crushing from 36-in. run-of-mine to <1/4-in. Grinding to 85% <200-m. in three stages, the first open-circuit, with a plethora of classifiers demanded by the fine grinding and large circulating loads carried. All-flotation differential concentration with rougher-scavenger routings on both lead and zinc streams and 2-step clean-

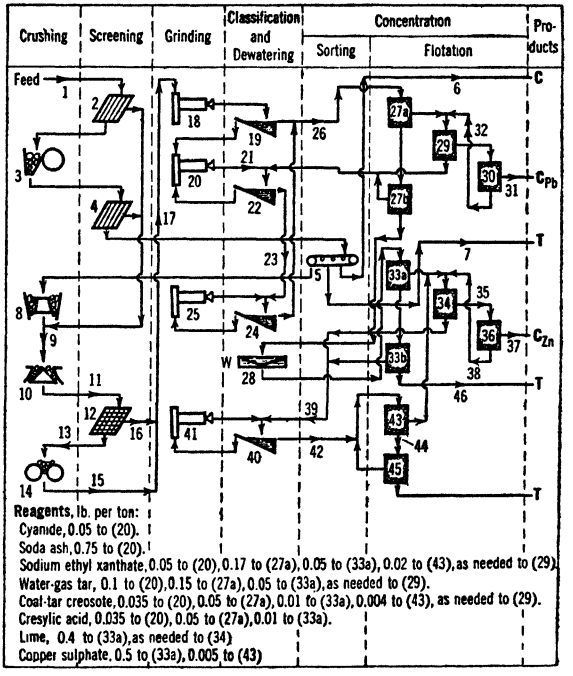

Legend for Fig. 116:

1. Run-of-mine, <36-in.; 2 storage bins, 1,000-ton for Sec. *A*, 800-ton for Sec. *B*.

2. Grizzly in Sec. *B*, none in *A*.

3. 1 @ 36 × 42-in. jaw crusher in *A*; 1 @ 36×43-in. in Sec. *B*; run alternately; 8-in. open setting.

4. 2 1/2-in. grizzly in each section.

5. 42-in. sorting belt with suspended magnet, one per section.

6. 1 @ 18-in. conveyor; 200-ton bin; 18-in. conveyor; R.R. car.

7. 1 @ 18-in. waste-rock conveyor.

8. 3 @ 10-in. Traylor gyratories, 3 1/2-in. open setting.

9. In Sec. *A* undersize of grizzly (4) to roll feeder; 24-in. conveyor; and 30-in. conveyor, where it joins the product of 2 of gyratories (8). In Sec. *B* the undersize of both grizzlies to shaking feeder and 36-in. conveyor where it joins the product of the third gyratory (8) and goes to 30-in. conveyor above. 30-in. conveyor discharges to a shuttle conveyor over a 3,500-ton storage bin; R.R. cars to mill, 2 1/2 mi.; 1,800-ton receiving bin with 20 feeders; 2 parallel gathering conveyors; conveyor.

10. 1 @ 7-ft. standard cone crusher, set 11/16 in.

11. 3 conveyors in series; surge bin.

12. 4 @ 4×5-ft. Type 39 Hum-mer screens, 1/4×3/4-in. aperture.

13. 2 conveyors in parallel.

14. 2 @ 74×20-in. A-C Garfield rolls, 1/4-in. set.

15. Conveyor.

16. Conveyor.

17. Conveyor; sampler; tripper conveyor; 1 @ 5,000-ton steel and 1 @ 3,700-ton concrete bin; 110 feeders; gathering conveyors; 6 section-feed conveyors with weightometers.

18. 6 @ 10×4-ft. Hardinge ball mills, Sec. 5, Table 32.

19. 2 @ 8×20-ft. normal-duty duplex rake classifiers; 1 @ 8-ft. heavy-duty duplex rake classifier; 1 @ 72-in. Akins classifier.

20. 4 @ 8×4-ft. and 4 @ 10×4-ft. Hardinge ball mills. Sec. 5, Table 32.

21. 8 Wilfley pumps.

22. 10 @ 6×25-ft. duplex rake classifiers and 11 @ 72-in. Akins classifiers in parallel.

23. 8 Wilfley pumps and 1 @ 20-ft. surge tank.

24. 6 @ 6×23 1/2-ft. duplex rake and 1 @ 8×20-ft. double duplex rake classifiers in parallel.

25. 2 @ 8×4-ft. Hardinge ball mills.

26. 1 @ 30-ft. surge tank.

27. 10 @ 16-cell M-S subaeration and 2 @ 18-cell M-S standard machines in parallel; (*a*) = early cells.

28. 2 Genter thickeners.

29. 2 @ 10-cell M-S standard machines.

30. 2 @ 10-cell M-S subaeration machines.

31. 2 Wilfley pumps; 50-ft. thickener; lead stock tank; 2 Wilfley pumps; 2 @ 8×12-ft. Oliver filters.

32. 6 Wilfley pumps.

33. 8 @ 16-cell M-S subaeration machines; (*a*) = early cells.

34. 1 @ 6-cell Fagergren and 2 @ 10-cell M-S subaeration machines.

35. 2 Wilfley pumps.

36. 1 @ 10-cell (2 @ 5-cell) Denver and 1 @ 4-cell Pan-American machine.

37. 1 Wilfley pump; 50-ft. thickener; zinc stock tank; 2 Wilfley pumps; 2 @ 6-ft. 6-disk American filters.

38. 2 Wilfley pumps.

39. 2 Wilfley pumps.

40. 1 duplex rake and 1 bowl-rake classifier.

41. 1 @ 8×4-ft. Hardinge ball mill.

42. 1 Wilfley pump; 1 surge tank.

43. 2 @ 3-cell Fagergren machines.

44. 2 Wilfley pumps.

45. 1 @ 18-cell M-S standard machine.

46. Via 60-ft. traction thickener, water reclaimed.

FIG. 116. CONSOLIDATED M. & S. Co., Sullivan mill.

ing of both rough concentrates. Lead middling is returned the second stage of the primary grinding circuit; zinc middling is reground in a separate circuit, scalped, and the scalped concentrate returned to the head of the zinc-cleaner circuit.

The difficulties in treating a finely disseminated complex ore are reflected in the recoveries that must be accepted here in order to maintain concentrate grades that will stand the 200-mi. haul to the smelter.

Eagle-Picher Mining & Smelting Co., Central mill. Fig. 117 (*Q* by Elmer Isern, Sup't of Milling; *153 A 89*).

Location: Picher, Okla.
Ore: Sphalerite and galena in a gangue of chert and jasperoid.
Capacity: 12,000 tons per 24 hr.
Assays: Feed: 4.5% Zn, 0.75% Pb; concentrate, 60.9% Zn, 80.3% Pb; tailing, 0.84% Zn, 0.09% Pb.
Recovery: 81% Zn, 88% Pb.
Ratio of concentration: 17 : 1.
Water: Comes from deep wells and from settling ponds at mill; 5 tons per ton of ore milled in circuit; as much as possible reclaimed.
Power: Company-generated by Diesel engines; comes 1 1/2 mi. at 23,000 volts; motors up to 2,200-volt, 25-cycle; consumption, 9.1 hp-hr. per ton milled.
Labor: 85 tons per man-shift, operating; 65 tons per man-shift, repairs.
Running time: 93%.
Mill building: Flat site. Steel and concrete, galvanized-iron enclosure; level concrete floors; heated; power cranes throughout.
Transportation: Mines 0.5 to 40 mi. distant, feed comes in by truck and by train; lead concentrate shipped 25 mi.; zinc concentrate, 200 mi. Moisture in jig concentrate, 2%; in flotation concentrate, 10%.

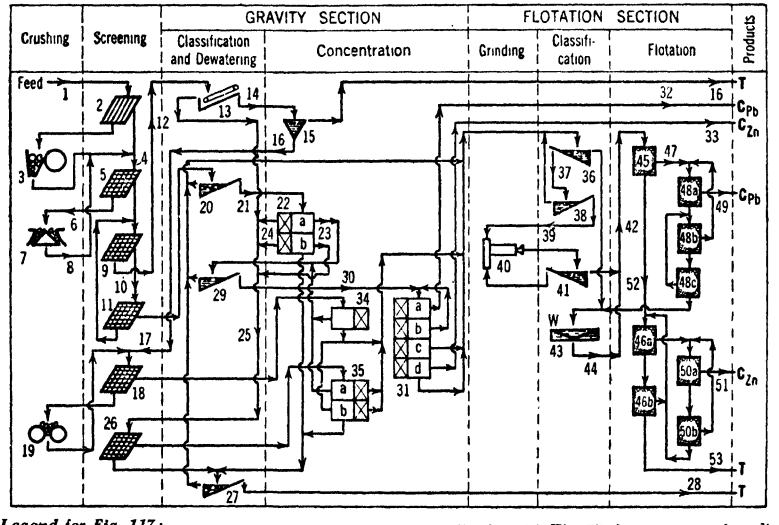

Legend for Fig. 117:

1. By railroad and truck to 5 hoppers; pan feeder.
2. Roller grizzly.
3. Two Webb City jaw crushers.
4. Belt conveyor; Butchart sampler; belt conveyor; 1 @ 6,000-ton bin; 5 feeders; belt conveyor; surge bin with feeders.
5. Vibrating screens, 1 1/2-in. aperture.
6. Belt conveyor.
7. Symons cone crusher.
8. Belt conveyor.
9. Vibrating screen, 3/16-in. aperture; undersize is about 25% of mill feed.
10. Elevator.
11. Vibrating screen.
12. Belt conveyor; surge bin.
13. Dewatering belt.
14. Belt conveyor.
15. 2 @ 9-ft. Wuensch sink-float cones, galena medium (sp. gr. = 2.70 to 2.74). About 2 lb. flotation concentrate per ton of mill feed added; substantially all recovered. (See Sec. 11, Art. 29.) Tailing comprises about 65% of mill feed (87% of cone feed) and assays less than 0.75% Zn.
16. See Sec. 11, Fig. 77, for recovery of medium from concentrate and tailing. Coarse tailing is sent to tailing pile or sold, with or without recrushing in a cone.
17. Medium recovery plant as (16); belt conveyor; surge bin; belt conveyor; elevator.
18. Vibrating screen.
19. Rolls.
20. Drag.
21. Belt conveyor; surge bin; distributor.
22. 4-compartment rougher jigs, *a* = first two compartments, *b* = last two compartments; making both hutch and screen middling.
23. Hutch.
24. Screen middling.
25. Elevator.
26. Trommel.
27. Drag.
28. Belt conveyor; railroad cars for sale or to tailing pile.
29. Drag.
30. Elevator.
31. 7-compartment hutch-making cleaner jigs (six compartments effective); *a* = compartment 1, *b* = 2, *c* = 3, *d* = 4 to 6.

FIG. 117. EAGLE-PICHER M. & S. Co., Central mill.

Legend for Fig. 117—Continued:

32. Elevator; drag; belt conveyor; bin; railroad cars.
33. Elevator; drag; bin; railroad cars.
34. 5-compartment hutch-making jigs.
35. 4-compartment jigs making both hutch (to 29) and screen middling: *a* = compartments 1, 2; *b* = 3, 4.
36. Drag.
37. Elevator.
38. Drag.
39. Surge bin; feeder.
40. Ball mills.
41. Ball-mill classifiers.
42. Elevator.
43. Thickeners.
44. Pumps.
45. 14-cell lead rougher-flotation machines.
46. 14-cell zinc rougher-flotation machines; *a* = cells 1 to 10, *b* = cells 11 to 14.
47. Pump.
48. 8-cell lead cleaner; *a* = cells 1, 2, *b* = cells 3 to 5, *c* = cells 6 to 8.
49. Diaphragm pump; filters; railroad cars.
50. 10-cell zinc cleaner; *a* = cells 1 to 5, *b* = cells 6 to 10.
51. Diaphragm pump; filters; belt conveyor; railroad cars.
52. Pump.
53. Pump.

Summary. Two-stage crushing to <1 1/2-in. Tailing roughed out at 1 1/2~3/16-in. by sink-float cones. Rough middling recrushed and cleaned in two stages on jigs. <3/16-in. primary feed deslimed, and roughed and cleaned on jigs. Primary fines and jig middling classified, sands ground in closed circuit, and combined primary and reground feed concentrated by differential flotation.

Mount Isa Mines, Ltd., Fig. 118 (*IC 7073; 116 Aa 482*).

Location: Mount Isa, Queensland, Australia.

Ore is an extraordinarily fine grained intergrowth of galena, sphalerite, pyrite, marcasite, pyrrhotite, chalcopyrite, sulphosalts of silver, and dolomite, in carbonaceous shales which contain both fixed carbon and more or less volatile hydrocarbons. Some of the pyrite (the oldest geologically) is apparently coated with carbonaceous material, since it floats despite high concentrations of cyanide and alkali, although it can be depressed by carbon depressants such as starch and protein-type colloids. Oxidation is very rapid, so that mining is planned to allow a minimum of time between breaking and milling.

Capacity: 1,840 tons per 24 hr.

Assays: See Table 88.

Recovery: See Table 88.

Table 88. Assays and recoveries at Mount Isa

Material	Weight, %	Assays			Recovery, %		
		Pb, %	Zn, %	Ag, oz. per ton	Pb	Zn	Ag
Feed.....	100.0	8.9	9.8	6.5	.....	.....	.....
Lead conc..	19.1	39.1	10.4	27.2	83.5	.....	79.8
Zinc conc...	9.3	1.7	52.7	2.4	.....	49.9	.....
Tailing.....	71.6	1.8	4.1	1.5	.....	.....	.....

Ratio of concentration: Pb, 5.1 : 1; Zn, 11 : 1.

Water: From mine, supplemented as necessary by reservoir water brought 20 mi. Mine water contains over 3,000 parts per million of salts, principally Ca, Mg, Na, SO_4, and Cl ions; it is added to mill tailing so that some conditioning takes place through the tailing pond; if added directly to mill circuit, reagents, particularly Aerofloat, must be increased immediately; in any case, reagent consumption is high.

Power: Generated at plant by steam-turbine alternator at 3,300-volt, 3-phase, 50-cycle, using pulverized coal for steam making. Motors are 3,300-volt for 75-hp. upward; 440-volt below. Cost, distributed, 0.67¢ per kw-hr. (1938). CONSUMPTION, hp-hr. per ton: crushing, 2.80; grinding, 23.80; flotation, 12.30; concentrate handling, 1.00; tailing disposal and water return, 2.35; lighting, 0.60; total, 42.85.

Labor: Tons per man-shift, total, 30.5.

Running time: 98.6%.

Mill building: Slightly sloping site. Steel and concrete.

Machinery handling: Cranes in crushing, and grinding and classifier bays.

Tailing disposal: 1 @ 6-in. Wilfley pump raises tailing through a 12-in. wood-stave pipe to an elevated launder system, whence it flows to a tailing dam where it is discharged through spigots along the dam crest. The face is maintained at a 1-to-1 slope. The launder is lifted in 10-ft. steps and moved back 30 ft. at each lift. Reclaimed water is returned by pontoon pumps.

Distances: Mill at mine. Lead smelter at mine. Zinc is shipped 600 mi. by rail to Townsville, thence by steamer to Tacoma, Wash.

Costs: Crushing, $0.116; grinding, 0.227; classification, 0.015; flotation, 0.324; concentrate handling, 0.010; tailing disposal, 0.043; superintendence and miscellaneous, 0.177; total, $0.912 (1938).

Legend for Fig. 118:

1. Ore passed through 14 × 20-in. grizzlies underground. 1,600-ton (1,100 live) bin; 2 @ 36-in. apron feeders, 10-hp.

2. 2 variable-speed motors. Stationary-bar grizzlies, 2 1/4-in. spacing.

3. 2 @ 24 × 36-in. jaw crushers in parallel, 4-in. open setting, 224 r.p.m., 75-hp. motors (50 to 60 hp. consumed); manganese-steel plates, life of upper sections 20 mo., lower sections 12 mo.; toggles and seats, 16 weeks.

4. 1 @ 30-in. conveyor, 19 1/2° slope; 2 cone-feed conveyors in parallel with bipole high-intensity magnets.

5. 2 @ 5 1/2-ft. cone crushers in parallel, 485 r.p.m., 150-hp. motors (100 hp. consumed), set 3/8-in. Manganese-steel bowl and liner last 350 da.

6. Belt conveyor.

7. 1 @ 5 × 12-ft. 2-deck Niagara screen, 960 r.p.m., 7 1/2-hp. motor; 3/4 × 3/4-in. and 3/4 × 1/4-in. woven manganese-steel screens, life of upper screen 42 da., lower 60 da.

8. Belt conveyor.

9. 1 @ 4-ft. short-head cone crusher, 1/8-in. set, 485 r.p.m., 100-hp. motor (100-hp. consumed), 140 tons per hr. max. capacity. Bowl and mantle lives (Mn steel) 100 to 114 da.

10. Belt conveyor.

11. 1 @ 5 × 12-ft. Niagara screen, 1/4-in. aperture. Life of manganese-steel woven screen cloth, 18 da.

12. 2 conveyor belts in series, surge bin, belt feeder.

13. 1 @ 72 × 20-in. heavy-duty rolls driven 115 r.p.m. by 2 @ 125-hp. motors through V-belts.

14. 2 @ 5 × 12-ft. Niagara screens in parallel, 3/16-in. aperture.

15. Belt conveyor.

16. 1 @ 30-in. belt conveyor; shuttle conveyor; 6 @ 22 (diam.) × 45-ft. steel bins; 6 flat 36-in. feeder conveyors; 3 conveyors with weightometers.

17. 3 @ 8-ft. × 60-in. Hardinge ball mills, 20.8 r.p.m., 220-hp. motors (195 hp. consumed); 44,000 lb. forged chrome-steel balls, 4-in. renewals, 0.68 lb. per ton. Feed scoop, 42-in. rod.

18. 3 @ 14-in. pipe conveyors with 29-in. scoops, 38 r.p.m., 7 1/2-hp. motors.

19. 3 @ 8-ft. rake classifiers, 2 1/2-in. per ft. slope, 28 s.p.m., 15-hp. motors, overflow 70% solids with ball-mill feed at 90% < 1/4-in.

20 4-in. pump.

21. 3 @ 20 (diam.) × 16 × 36-ft. bowl-rake classifiers, 2-in. per ft. slope, 3.3 r.p.m. and 17 s.p.m., 25-hp. motor (18 consumed). Overflow aver., 42% solids; 200 to 220 tons per hr. total feed into each mill (including circulating).

22. 3 @ 8-ft × 60-in. Hardinge mills in parallel; 20.8 r.p.m., 220-hp. motors (205-hp. consumed); 41,500 lb. of 2-in. alloy-cast-iron balls, 0.84 lb. per ton. Feed scoop, 54-in.

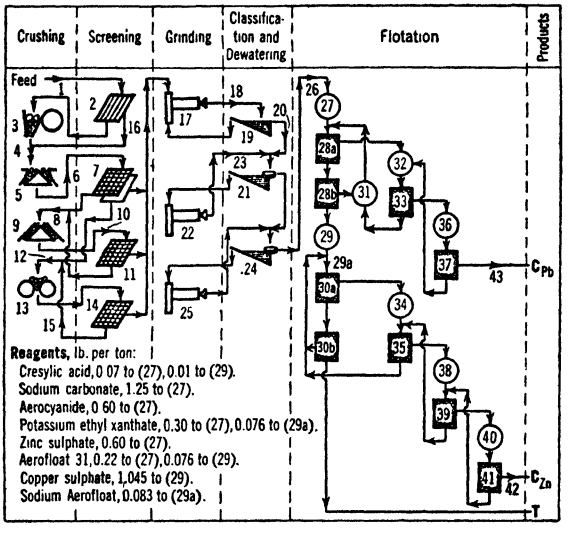

23. 2 @ 14-in. pipe conveyors in series, each mill; 31 r.p.m., 36-in. scoops.

24. 3 @ 18 (diam.) × 8-ft. bowl-rake classifiers, 2 r.p.m., 16 s.p.m. Overflow held at 33 to 38% solids to effect differential overgrind of sulphides, 76% < 325-m.; contains 90% of the galena.

25. 1 @ 8-ft. × 60-in. Hardinge ball mill.

26. 2 @ 4-in. Wilfley pumps.

27. Contact tanks. See Table 89.

28. 4 banks of 12 @ 56-in. Fagergren cells, 580 r.p.m., 10-hp. motors. Feed *p*H, 8.0 to 8.6. Aerofloat added to contact tank and 6th and 9th cells. (*a*) = first 5 cells in each row. Rotor and stator rubber-covered.

29. 2 @ 9 (diam.) × 12-ft. tanks in series. See Table 89.

29*a*. 1 @ 8-in. Wilfley pump.

30. 3 rows of 12 @ 24-in. Denver Sub-A machines in parallel, 238 r.p.m., 15-hp. motor for each pair of cells. (*a*) = 8 cells. Rubber-covered impellers and hood plates. (Hard cast-iron hood plates were replaced in 6 mo., cell pans in 12 mo., baffles in 18 mo.) See Table 89.

31. 1 @ 9 (diam.) × 12-ft. surge tank.

32. As (31).

33. 7 @ 56-in. Fagergren cells, 400 r.p.m., 7 1/2-hp. motors; rotor and stator rubber-covered.

34. As (31).

35. 5 @ 24-in. Denver Sub-A cells.

36. As (31).

37. 5 @ 56-in. Fagergren cells, as (33).

38. As (31).

39. 4 @ 24-in. Denver Sub-A cells.

40. As (31).

41. 3 @ 24-in. Denver Sub-A cells.

42. 2 @ 30 × 10-ft. thickeners; 1 @ 14 × 7-ft. stock tank; 1 @ 3-in. Wilfley pump; 3-in. line 1,300-ft. long; 2 @ 12 × 12-ft. stock tanks; 1 @ 6-leaf 8 1/2-ft. American filter, cake 12% moisture, see Table 89; 1 @ 7 × 40-ft. coal-fired rotary drier, 4 to 6 lb. water evaporated per lb. of coal, product 6% moisture.

FIG. 118. MT. ISA MINES.

Legend for Fig. 118—Continued:

43. 4-in. Wilfley pump; distributor; 3 @ 19 1/2-ft. thickeners (feed 15 to 25% solids, underflow 70% solids, see Table 89); 2 @ 14(diam.)×7-ft. Goldfield agitators, 10 r.p.m., 5-hp. motors; 3-in. Wilfley pump, 650 ft. to smelter by a line rising vertically 10 ft., thence on a uniform 3 1/2% downgrade to the discharge. Pump power at full load, 30 hp., pumps 65 to 70 tons per hr.

Table 89. Sizing-assay tests of flotation products at Mount Isa, May, 1938

Mesh	Weight, %	Assays, %		
		Pb	Zn	Fe
Flotation feed *a*	100.0	9.2	9.3	11.0
>150	6.0	1.8	1.5	4.4
200	8.5	2.8	2.7	3.8
325	9.5	4.7	10.1	11.6
<325	76.0	11.0	10.5	12.2
Lead concentrate	100.0	39.5	10.0	14.3
>325	5.5	29.8	18.4	10.2
<325	94.5	40.0	9.5	14.6
Lead tailing	100.0	1.7	9.1	9.7
>150	11.5	1.7	2.5	5.0
200	12.0	2.6	5.5	8.0
325	14.0	2.6	8.4	11.9
<325	62.5	1.3	11.2	10.5
Zinc concentrate	100.0	1.7	52.8	7.5
>200	3.0	3.6	44.6	8.5
325	11.5	3.2	46.5	9.1
<325	85.5	1.4	53.9	7.2
Tailing	100.0	1.7	3.5	9.8
>100	3.0	1.2	1.9	3.9
150	8.5	1.7	2.8	5.1
200	11.5	2.4	4.4	7.8
325	13.0	2.4	4.8	12.1
<325	64.0	1.5	3.2	10.6

a An infrasizer test on this product showed:

Microns	>56	40	28	20	14	10	<10
Weight, %	30.0	8.8	10.0	7.2	5.6	5.2	33.2

Summary. Four-stage crushing from 14-in. to 1/4-in. 3-stage grinding to 85% <200-m. Differential flotation with two cleanings of lead concentrate for local smelting and three cleanings of zinc (with low recovery) for 10,000-mi. shipment. This ore requires extremely fine grinding for liberation and is so active chemically that with the long grinding time harmful surface sulphide reactions and slime coating occur to an extent that renders all flotation reluctant and selection highly difficult.

Anaconda Copper Co., Zinc plant (*Q* by T. M. Morris) crushes from run-of-mine to <1 1/2-mm. in five stages comprising two jaw-crusher stages, each with scalping screens, and 3 closed-circuit roll stages. Grinding to 65 *mog* is one-stage closed-circuit. Flotation (Fig. 119) is rougher-scavenger bulk flotation on the primary stream; 3-step cleaning of

Table 90. Assays at Anaconda zinc plant

Material	Assays						
	Per cent.					Oz. per ton	
	Zn	Pb	Cu	Fe	Insol.	Ag	Au
Feed	8.70	2.03	0.27	.....	.....	5.83	0.015
Zinc conc	54.38	5.22	0.90	3.1	3.1	27.77	0.048
Lead conc	4.74	68.04	4.29	3.3	0.6	52.61	0.043
Silver-iron conc	3.40	1.77	0.65	.....	.....	10.43	0.064
Tailing, zinc	0.47	0.22	0.08	.....	.....	1.03	0.0059
Tailing, Ag-Fe	0.25	0.10	0.05	.....	.....	0.34	0.0021

bulk concentrate; depression of a zinc concentrate by zinc sulphate and sodium cyanide and 2-step cleaning of the lead float. See Table 90.

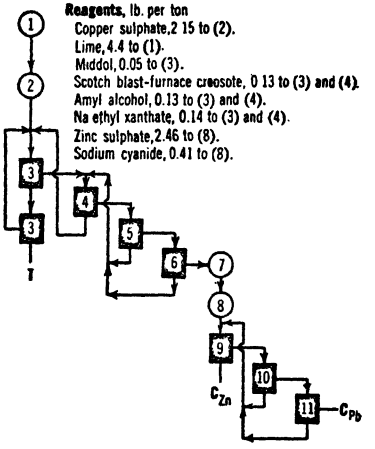

Legend for Fig. 119:

1. Grinding circuit.
2. 2 @ 9-cell M-S machines in parallel used as pre-agitators.
3. 7 @ 14-cell 24-in. standard M-S machines.
4. 3 @ 11-pan 3×3-ft. Callow cells.
5. 3 @ 4-pan 3×3-ft. Callow cells.
6. 3 @ 3-pan 18×36-in. Callow cells.
7. 1 @ 50-ft. thickener.
8. 6 @ 36-in. M-S agitators.
9. 1 @ 14-pan 2×3-ft. Callow cell.
10. 1 @ 5-pan 1×3-ft. Callow cell.
11. 1 @ 4-pan 1×3-ft. Callow cell.

FIG. 119. ANACONDA COPPER CO., zinc-plant flotation.

This flowsheet constitutes a distinct departure from flowsheets previously described for zinc-lead separation.

Tri-State tailing retreatment. Fig. 120 (*138 & 12 J 38*).

Ore: Tailing piles from old gravity mills; sphalerite with more or less galena in chert and limestone.
Capacity: 40 to 125 t.p.h. is the usual range.
Assays: Feed, 2 to 4% Zn; concentrate, 60% Pb, 60 to 62% Zn; tailing variable according to economics of operation.
Costs: Range is 20 to 45¢ per ton of feed, average about 30¢. Transport to mill, 4 to 10¢ per ton.

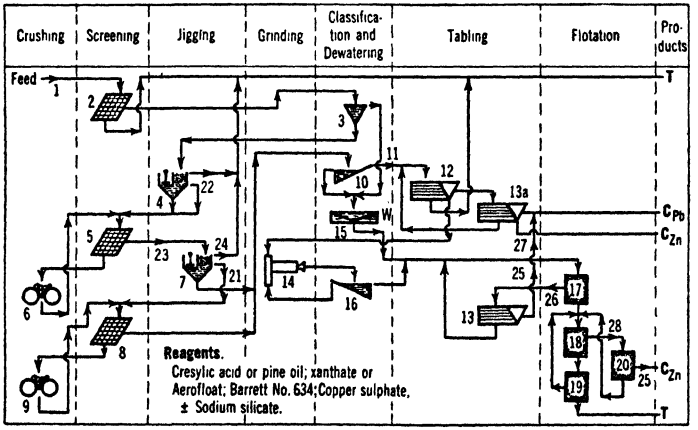

Legend for Fig. 120:

1. By truck from tailing piles. 21.4 cu. ft. per ton of loose tailing.
2. Scalping screen; baffled wash trommel or shaking screen.
3. Deslimer of rake, drag, or automatic-cone type; mechanical preferred on account of smaller headroom loss and more regular sand-discharge rate; <65-m. overflow.
4. 1 @ 42×48-in. 6-cell Cooley-type roughing jig; 6- to 8-in. beds carried; 90 to 120 @ 1- to 2-in. s.p.m.; 25 to 30 tons per hr. capacity. Usually run with split feeds, i.e., as 2 to 6 jigs in parallel.
5. Screen, 1/8 to 1/4-in. aperture; trommel or vibrating.
6. Rolls.
7. Chat-roughing jig.

FIG. 120. TRI-STATE tailing mill.

Legend for Fig. 120—Continued:

8. 1 1/2- or 2-mm. screen; trommel or vibrating.
9. Rolls.
10. Desliming classifier, 150-m. separation.
11. Separately.
12. Roughing tables.
13. Cleaner tables.
13*a*. As (13).
14. Ball mill. High-speed rolls used at one mill.
15. Thickener, clear overflow; spigot about 25% solids.
16. Rake classifier. 35 to 14-m. overflow.
17. Lead rougher.
18. Zinc rougher.
19. Zinc scavenger.
20. Zinc cleaner.
21. May be further enriched before recrushing.
22. 50 to 70% of jig feed.
23. 25 to 50% of original mill feed.
24. 50 to 60% of jig feed.
25. 60 to 70% of total concentrate; 60 to 62% Zn.
26. 35 to 40% Pb.
27. 60% Pb.
28. About 57% Zn.

Summary. Waste scalped out on jigs; jig middling crushed in rolls, sands treated on tables to yield concentrate and tailing; middling reground and floated with original slime.

Treadwell Yukon Corp., Ltd., Elsa mill (*Q*), at Mayo, Yukon Territory, treats 168 tons per 24 hr. of lead-zinc-iron sulphide ore in a quartzite-schist-carbonate gangue by one-stage crushing in 2 @ 4-in. reduction gyratories, one-stage closed-circuit grinding to 8% >48-m., and simple bulk flotation as shown in Fig. 121, using American Cyanamid R-242, amyl xanthate and cresylic acid, all fed to the ball mill. Feed assays 55 oz. Ag and 4% Pb; concentrate, 430 oz. Ag, 26% Pb, 20% Zn, 15% Fe, and 7% insol.; tailing, 8 oz. Ag, 1% Pb, and 0.5% Zn. Recovery averages 80% Ag and 70% Pb with a 10 : 1 ratio of concentration. Concentrate is shipped 1,800 mi.

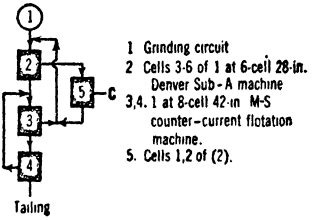

FIG. 121. TREADWELL YUKON CORP., Elsa mill flotation.

This is an example of extremely simple treatment of a complex ore in which silver is the predominant value. Tonnage is small, ratio of concentration fairly high, and despite the long haul to the smelter and a probable zinc penalty, differential flotation with the necessary finer grinding is not attempted.

Eagle-Picher Lead Co., Montana Mines. Fig. 122 (*Q* by E. H. Crabtree, Jr., Mill Sup't; *IC 6497*).

Location: Ruby, Ariz.

Ore, approximate composition: Galena, 3.6%; marmatite, 4.6%; pyrite, 4.2%; small amounts of chalcopyrite and tetrahedrite. The pyrite carries gold; the tetrahedrite, associated with the galena, carries silver. Gangue is quartz and diorite with, occasionally, considerable clayey material.

Capacity: 415 tons per 24 hr.

Assays: See Table 91.

Recovery: See Table 91.

Table 91. Composite assays and recoveries at Montana Mines for the year 1937

Material	Assays					Recoveries, per cent.				
	Percentages			Oz. per ton		Pb	Zn	Fe	Au	Ag
	Pb	Zn	Fe	Au	Ag					
Feed.....	3.1	3.1	1.9	0.054	5.18	100	100	100	100	100
Lead-iron conc.	42.2	7.6	16.6	0.653	63.14	93.5	15.6	54.0	82.3	82.7
Zinc conc.....	3.6	55.4	3.0	0.094	10.73	4.5	71.6	5.9	6.9	8.3
Tailing.....	0.07	0.44	0.86	0.0065	0.519	2.0	12.8	40.1	10.8	9.0

Ratio of concentration: 6 : 1 (total concentrate).

Labor: American and Mexican. Tons per man-shift: operating, 23.1; repairs, 130.1.

Running time: 94%. Principal cause of delay, repairs to flotation machines.

Water: Storage from local rainfall is normally sufficient. A stand-by pumping station is located on the Santa Cruz river, 15 mi. away, delivering through a 4-in. heavy duty lap-welded pipe line against a total head of 2,075 ft. (1,490 ft. static, 585 ft. friction). Cost (1930) about 25¢ per 1,000 gal. Gross consumption, 4 tons per ton milled; 95% re-used.

Building: Wood with corrugated iron sheathing; concrete floors, unheated; sloping site.

Machinery handling: Hand crawls in crushing plant; chain blocks in concentrator.

Power: Diesel power plant at mill; motors, 220-volt, 60-cycle; CONSUMPTION, 22 hp-hr. per ton milled.

Transportation: Nearest railroad, 40 mi. Mill at mine; trailer trucks (12-ton capacity for lead concentrate; 11-ton for zinc) make a round trip to railroad in about 16 hr. at a cost (1930) of about 11¢ per ton-mile. Lead concentrate is shipped to El Paso; zinc to Amarillo, Tex.

Tailing: Pumped 800 ft. through heavy-duty flanged pipe to a dam. Clear water overflow (75% of tailing water) pumped back to storage reservoir.

Costs (1930): $1.36 per ton operating, of which crushing comprised 23.7%, grinding 18.5%, and flotation 44%. Flotation reagent cost was 32¢ per ton.

Legend for Fig. 122:

1. 100-ton coarse ore bin.
2. Jeffrey grizzly feeder, pan-type.
3. 24×14-in. Blake crusher.
4. Belt conveyor.
5. 42×16-in. rolls.
6. Belt conveyor, 400-ton fine-ore bin, 4 belt feeders, 2 belt conveyors in series.
7. 8×3-ft. Hardinge ball mill.
8. 6×20-ft. rake classifier.
9. 2 @ 12-ft. Butchart flotation machines.
10. 2 as (9).
11. 2 as (9).
12. 1 as (9).
13. 3-in. Wilfley pump.
14. 4-in. diaphragm pump.
15. 4-in. Wilfley pump to dump.
16. 2-in. Wilfley pump.
17. 6-ft. 4-disk American filter.
18. 3-ft.×18-in. Hardinge mill.
19. 4-in. diaphragm pump.
20. Cells 1 and 2 of a 10-cell No. 15 Denver flotation machine.
21. Cells 3 to 6 of same machine.
22. Cells 7 to 10 of same machine.
23. 6-ft. 2-disk American filter; 1-ton cars, to bins and then to lead smelter.
24. 6-ft. 2-disk American filter; 1-ton cars to bins and then to zinc smelter.

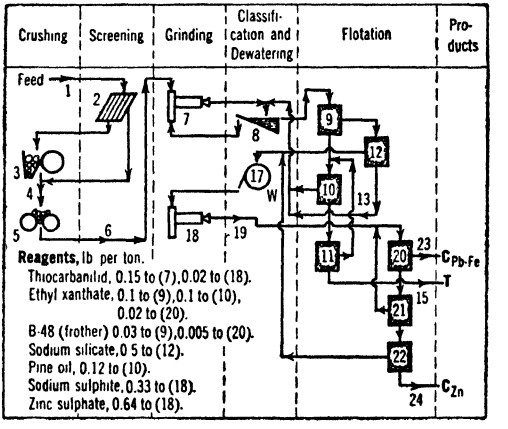

FIG. 122. EAGLE-PICHER LEAD CO., Montana Mines.

Summary. Crushing from run-of-mine (head-size) to ball-mill feed in two stages comprising jaw crusher and rolls, both in open circuit. Grinding to 27% >65-m., 45% <200-m. flotation feed in one stage, closed-circuit. All-flotation differential concentration, making bulk concentrate by a 3-stage rougher-scavenger flow on the primary run with middling regrind, cleaning once, dewatering to remove soluble copper, and then separating lead from zinc, using sodium sulphite and zinc sulphate, operating on a rougher-scavenger flow with middling regrind.

Gold, associated with the pyrite, is an important element in this ore, which explains the making of bulk concentrate on which a high concentration of sodium sulphite can be used to depress sphalerite without affecting pyrite.

Shenandoah-Dives Mining Co. Fig. 123 (Q by A. J. Yahn, Mill Sup't, and D. M. Kentro, Ass't Mill Sup't).

Location: Silverton, Colo.
Ore: Galena, chalcopyrite, sphalerite, and pyrite with Au and Ag in quartz.
Capacity: 700 to 780 tons per 24 hr.
Assays: See Table 92.
Recoveries: See Table 92.

Table 92. Assays and recoveries at Shenandoah-Dives

Material	Assays							Distribution, per cent.				
	Au, oz.	Ag, oz.	Pb, %	Cu, %	Zn, %	Fe, %	Insol., %	Au	Ag	Pb	Cu	Zn
Feed	0.100	1.90	0.69	0.43	0.88	3.20	.....	100.0	100.0	100.0	100.0	100.0
Lead conc. (flot.)	2.150	59.0	22.0	15.5	6.6	21.5	1.5	50.5	71.0	76.2	84.3	17.4
Zinc conc.	0.140	6.1	0.8	0.9	50.8	7.1	1.9	0.8	1.9	0.7	1.3	34.0
Table conc.	6.160	30.0	21.7	1.5	2.0	32.6	1.8	32.3	8.4	16.1	1.3	1.1
Pyrite reject.	0.112	3.27	0.28	0.29	7.12	31.2	18.1	2.8	4.3	1.0	1.7	20.3
Tailing	0.0145	0.29	0.04	0.05	0.25	1.80	.....	13.6	14.4	6.0	11.4	27.0

Ratios of concentration: Pb-Cu, 34 : 1; Zn, 170 : 1; pyrite, 40 : 1.
Water comes by gravity 1 mi. from a spring in summer and from a creek in winter; CONSUMPTION, 3 tons per ton of ore; none reclaimed.

Power: Purchased; comes 25 mi. at 16,000 volts; motors, 440-volt 60-cycle; CONSUMPTION, 27 hp-hr. per ton milled.

Labor: American. Tons per man-shift: operating, 60; repairs, 200.

Running time: 95%. Principal cause of loss is ball-mill repair.

Building: Sloping site. Wood-frame. Concrete floors; 1/4 in. per ft. slope in wet part. Steam heated.

Machinery handling: Hand chain blocks in coarse-crushing and concentration; power crane in grinding section.

Tailing disposal: Flume along periphery of pond discharges sands through spigots; slimes carried back into pond; clear water decanted.

Distances: Mine to mill, 10,000 ft. by aerial tram; nearest railroad 3 mi.; lead concentrate shipped 529 mi., zinc 616 mi.

Legend for Fig. 123:

1. Primary crusher at mine; aerial tram; 1,200-ton bin; 24-in. pan conveyor.

2. 1 @ 4-ft. short-head cone.

3. 1 @ 8×6-ft. Marcy grate mill with 6-m. trunnion trommel.

4. 1 @ 12×26-ft. quadruplex rake classifier; overflow 15% >48-m., 38% <200-m.

5. 1 @ 6×5-ft. Stearns-Rogers ball mill.

6. 2 @ No. 6 Wilfley tables.

7. 1 @ No. 6 Wilfley table.

8. 2 @ 20-cell No. 21 M-S subaeration flotation machines in parallel; in one row (*a*) = cells 4 to 6, (*b*) = cells 7 to 20, (*c*) = cells 1 to 3; in the other row cells 1 to 3 take froth from cells 7 to 20, send froth together with that from cells 4 to 6 to cells 1 to 3 of the first row, and send tailing to cells 4 to 6 of their own row.

9. 1 @ 35×10-ft. thickener.

10. 1 @ 4×10-ft. Stearns-Rogers ball mill.

11. 1 @ 6×16-ft. Esperanza drag classifier.

12. 1 @ 8-cell No. 18 special Denver flotation machine; (*a*) = cell 2, (*b*) = cells 3 to 5, (*c*) = cells 6 to 8, (*d*) = cell 1.

13. 1 @ 6-cell No. 18 special Denver flotation machine; (*a*) = cells 2 to 6, (*b*) = cell 1.

14. 1 @ 3 1/2(diam.)×5-ft. Denver conditioner.

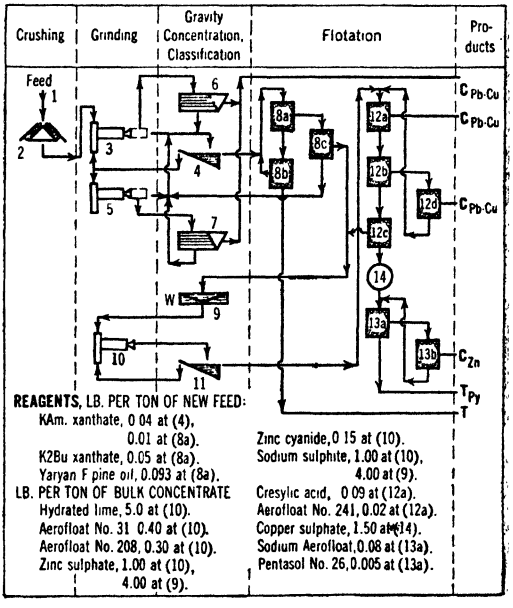

FIG. 123. SHENANDOAH-DIVES MINING CO.

Summary. Two-stage crushing (one at mine); one-stage closed-circuit primary grinding and one-stage closed-circuit regrind of bulk concentrate. All-flotation concentration comprising a bulk float by rougher-scavenger flow, followed by depression of zinc and iron and reflotation of zinc.

Here (in contradistinction to Fig. 122) the gold is associated with chalcopyrite, so that after making a bulk float, zinc and iron are depressed by lime, zinc sulphate, cyanide, and sodium sulphite, and the zinc thereafter reactivated preferentially by copper sulphate.

United States Smelting, Refining & Mining Co., Midvale plant. Fig. 124 (Q by R. A. Pallanch, Mill Sup't; *IC 6492*).

Location: Midvale, Utah.

Ore: Comes from two company mines and from a variety of custom sources. Principal sulphide minerals are galena, sphalerite, marmatite, and pyrite with minor amounts of chalcopyrite. Gangue is principally quartzite with some lime carbonates and considerable clayey material. A typical mill feed would approximate galena, 10%; sphalerite (or marmatite), 12%; pyrite, 20%; chalcopyrite, 1%; with Au, 0.05 oz. per ton, and Ag, 3 to 5 oz. per ton. Pyrite and galena are fairly coarse grained but sphalerite is more finely disseminated, requiring a grind to 5% >65-m. to free it satisfactorily. Galena sometimes somewhat sulphatized; lead content of both lead-circuit and final tailings increases with increase in this condition. Ore contains 5 to 7% moisture. The higher percentage causes trouble throughout the crushing, conveying, and feeding.

Capacity: 1,700 tons per 24 hr. max.

Labor: American. Tons per man-shift: operating, 25; repairs, 200.

Running time: 99%. Principal loss due to repairs.

Water: Comes by canal 16 mi. from Utah Lake. 100-ft. lift at plant consumes 45 hp. No reclamation. CONSUMPTION: 4 tons per ton of ore.

Building: Steel frame, Gunite walls, concrete floors. Heated. Level site.

Machinery handling: Power cranes in crushing and grinding plants; chain blocks in concentrator.

Power: Purchased. Comes 135 mi. at 44,000 volts. Motors, 440-volt, 60-cycle. CONSUMPTION: 33 hp-hr. per ton of ore, distributed as follows: crushing and conveying, 5.6%; grinding, 33.8; flotation, 30.4; tabling, 0.9; dewatering, 4.0; pumping, 22.7; water supply, 3.7%.

Transportation: D. & R. G. R.R. at plant. Ore comes 16 mi. in standard-gage 50-ton gondolas. Lead concentrate shipped 1/4 mi.; zinc, 500 mi.; pyrite, 20 mi.

Tailing: Impounded in ponds; clear overflow to Jordan River.

Legend for Fig. 124:

1. Crushing-plant (notes 1 to 14) capacity, 1,000 tons per 8 hr. Feed arrives in gondola cars (8 spotted at a time), is discharged into 2 @ 75-ton track hoppers with arc gates, thence by 2 @ 36-in. pan feeders arranged to permit mixing of two ores, and 1 @ 30×15 1/2-in. chain-bucket elevator (80° slope, 30-ft. lift, 50 f.p.m.) to

2. 1 @ 36-in. Nelson grizzly, 2-in. spaces.

3. 100 t.p.h.

4. 1 @ 14-in. gyratory, 2-in. open setting.

5. 18-in.×17-ft. belt conveyor, 16×9-in. belt-bucket elevator (vert., 50-ft. lift); 9-ton surge bin.

6. 2 @ 4×5-ft. Hum-mer screens, 3/4-in. aperture.

7. 75 t.p.h. 16-in. conveyor with suspended magnet.

8. 1 @ 54×16-in. rolls, 1-in. set.

9. 16-in. belt conveyor; 18-in. belt conveyor; 16×9-in. belt-bucket elevator (vert., 50-ft. lift); 9-ton surge bin.

10. 2 @ 4×5-ft. Hum-mer screens, 5/8-in. aperture.

11. 225 t.p.h. 16-in. belt conveyor with suspended magnet.

12. 1 @ 54×16-in. rolls, 3/8-in. set.

13. 16-in. belt conveyor to second item in note 9.

14. 38% >3-m., 8.5% <200-m. 18-in.×200-ft. belt conveyor (42-ft. rise, 200 f.p.m.); chain-and-bucket sampler (sample about 40 lb. per carload); 16-in.×50-ft. belt conveyor with tripper, alternatively to 6 (*a*) @ 125-ton transfer bins with roll feeders, whence mixtures as desired are transferred via a 16-in. belt conveyor to 7 @ 250-ton suspended-paraboloid mill bins, or (*b*) directly to the mill bins; thence, by 3 roll feeders from each bin to 1 @ 16-in. reversible belt conveyor (to permit feeding either of two adjacent sections).

15. Grinding and flotation (items 16 to 38) are carried out in four substantially independent units (of which one is shown), identical except as pointed out in the following notes.

16. 1 @ 5×10-ft. A-C rod mill.

17. 1 @ 2-in. Wilfley pump, 1 @ 2-way adjustable splitter.

18. 2 @ 54-in. Akins classifiers. (In units 3 and 4 these classifiers are 60-in.)

19. From classifier *A*.

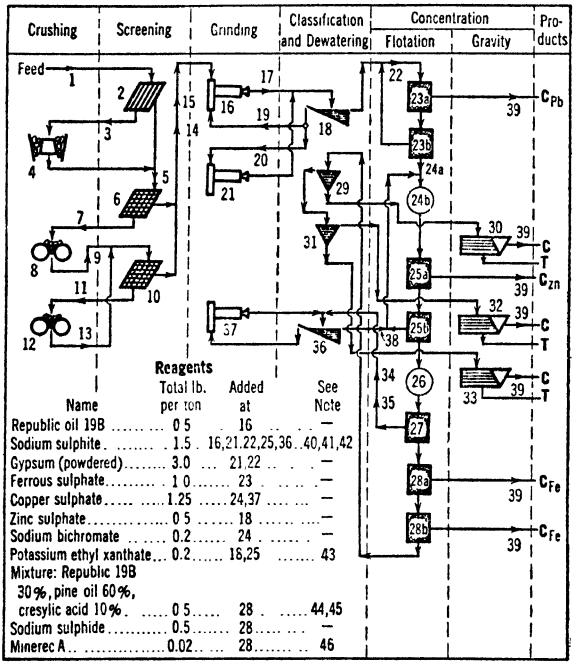

20. From classifier *B*.

21. 1 @ 5×10-ft. A-C ball mill.

22. 8% >65-m., 60% <200-m.; 1 @ 2-in. Wilfley pump (3-in. in Unit 4); 1 @ 10-ft. surge tank.

23. 1 @ 12-cell, 24-in. M-S subaeration machine, run without blower air. 240 r.p.m.; 38 to 40% solids; 12-min. time-factor; *p*H 7.5 to 7.8. (*a*) = first 5 to 8 cells.

24a. 1 @ 3-in. Wilfley pump.

24b. 1 @ 10-ft. surge tank.

25. 1 @ 10-cell 24-in. M-S standard machine, 240 r.p.m.; 36 to 38% solids; *p*H 7.6; 20-min. time-factor. (*a*) = first 3 to 5 cells.

26a. 1 @ 3-in. Wilfley pump.

26b. 1 @ 10-ft. surge tank.

27. 1 @ 8-cell 24-in. M-S subaeration machine. 240 r.p.m., 20-lb. pressure, 34 to 36% solids, *p*H 7.5, 10-min. time-factor.

28. 1 @ 8-cell 24-in. M-S subaeration machine. 240 r.p.m., 20-lb. pressure, 30 to 35% solids, *p*H 8.1, 8-min. treatment time. (*a*) = cells 1 and 2.

29. 1 @ 6-ft. cone tank.

30. 1 Deister table (2 in Unit 4).

31. 1 @ 6-ft. cone tank.

32. 2 Deister tables (4 in Unit 4).

FIG. 124. U. S. S. R. & M. Co., Midvale plant.

Legend for Fig. 124—Continued:

33. 1 Deister table.

34. 1 @ 2-in. Wilfley pump.

35. Two identical regrind circuits (items 36 to 38), one serving Unit 4 only, the other Units 1, 2, 3.

36. 1 @ 54-in. Akins classifier.

37. 1 @ 6-ft. × 36-in. Hardinge ball mill.

38. 1 @ 2-in. Wilfley pump.

39. One of 7 units, providing for separate dewatering of 7 grades of concentrate. The flow and apparatus in each unit are as follows, except as indicated: 1 @ 50 × 10-ft. thickener. (The overflow, in the unit treating concentrate from (28a) goes to a second 50 × 10-ft. thickener, which makes clear overflow and a spigot product that returns to cell 6 of item (27).); 1 @ 6-ft. American filter (5 @ 10 leaf filters are available; 2 are used for lead, 1 for zinc, and 2 for iron); lead cake, 8 to 10% water; zinc, 9 to 11%; iron, 10 to 12%; 5 @ 100-ton cake bins; cars to smelter.

40. Added at (21) in Unit 4 only.

41. Not added at (22) in Unit 4.

42. To cell 1 of (25).

43. To cell 4 of (25).

44. To cell 5 of (25).

45. To cell 2 of (27).

46. In unit 4 only.

Summary. Crushing from large head-size to $<^3/_4$-in. rod-mill feed in 3 stages, comprising gyratory, open-circuit rolls, and closed-circuit rolls. Grinding to 8% >65-m. flotation feed in a two-stage rod- and ball-mill series with the rod-mill circuit only partially closed. Concentration by preferential flotation of lead, zinc, and iron in order, adding sodium sulphite, zinc sulphate, and powdered gypsum in the initial conditioning; copper sulphate to re-activate zinc and sodium bichromate to depress lead in the zinc circuit; and sodium sulphide as an iron activator. Lead-flotation pulp follows a simple rougher-scavenger routing; zinc flotation is by the same flow, but two middlings are made and the lower-grade is reground before recirculation. The pyrite circuit is once-through, making two grades of concentrate. Flotation tailing is scavenged on tables.

This flowsheet takes advantage of the relatively coarse aggregation of galena and pyrite by confining regrinding to locked-sphalerite middling; and it guards against unsuspected losses in unfamiliar complex custom ores by use of scavenger tables. It is unique as of today in the failure to clean rougher concentrate except in so far as this is effected by counterflow of middling. Cleaning of zinc concentrate would normally be expected in view of the distance the concentrate is shipped. Power consumption is high but not excessive when the low over-all ratio of concentration (about 2 : 1), the complexity of the ore, requiring three flotation steps, and the extensive pumping following from this fact and the level site are considered.

San Francisco Mines of Mexico, Ltd. Figs. 125 and 126 (*Q* by H. B. Hanson, Gen'l Sup't, and G. O. Deshler, Mill Sup't).

Location: San Francisco del Oro, Chihuahua, Mex.

Ore is generally a lead-zinc-iron-copper complex carrying gold and silver, but comes from a number of veins, each with a different type of mineralization and each oxidized to a different extent. Each ore responds best to a specific treatment, but in order to avoid too great complexity in milling, the various ores are combined, through large (10,000-ton) crushed-ore storage pockets, into two classes, *viz.*: one comprising unaltered and slightly (10% or less) oxidized sulphides, and one consisting of mixed sulphide and highly (40% or more) oxidized minerals. The approximate composition of sulphide-mill feed in 1939 was: galena, 8%; sphalerite, 10%; chalcopyrite, 3%; pyrite, 5%; smaller amounts of chalcocite, arsenopyrite, and cerussite; fluorite, 17%; calcite, 10%; and insoluble 43%.

Gold occurs principally in arsenopyrite and silver sulphide; silver in galena, the copper sulphides, cerussite, and as an unidentified silver sulphide.

Oxide ore contains, in addition to the above sulphides, the carbonates of lead, zinc, and copper, anglesite, native copper, and minor amounts of pyromorphite, mimetite, vanadinite, wulfenite, and jarosite.

Table 93. Metallurgical results, sulphide mill, San Francisco Mines of Mexico

Material	Ratio of concentration	Assays				
		Oz. per ton		Per cent.		
		Au	Ag	Pb	Zn	Cu
Feed	.....	0.071	6.0	7.2	7.0	0.7
Lead conc	8.5	0.44	39.0	52.2	13.3	4.2
Zinc conc	14.3	0.039	5.8	2.1	55.2	1.0
Tailing	.....	.....	.....	1.5	2.0	.....
Recovery, %	.....	71.3	76.9	86	22.7	72.8

Table 94. Assays on carbonate ores at San Francisco Mines of Mexico

Material	Assays				
	Oz. per ton		Per cent.		
	Au	Ag	Pb	Zn	Insol.
Feed	0.25	3.0	3.0	3.5	.....
Conc	1.7	17.7	22.0	25.0	12.0
Tailing	0.052	0.67	0.55	.....	.....
Recovery, %	82	81	84	.....	.....

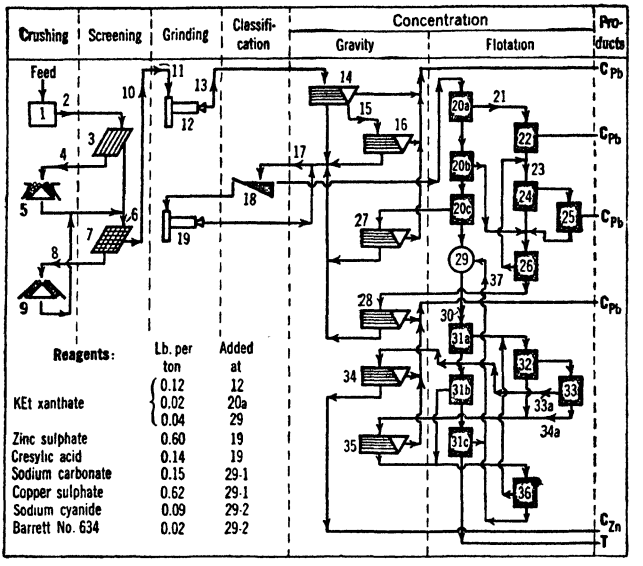

Legend for Fig. 125:

1. Primary crushing to 3 1/2-in. open settings in head-frame plants at three shafts; gyratories are used at two shafts and a jaw crusher at the third. Some picking of waste is done at these plants.

2. Aerial tramways from crushing plants (1.5 mi. for sulphides; 2.1 mi. for oxide ores); 4 tramway-terminal bins, 3,000 tons total capacity; 1 @ 16×48-in. traveling apron feeder serving 4 bins; 1 @ 22-in.×118-ft. conveyor (level); 1 @ 22-in.× 48-ft. conveyor (+15° slope) with suspended magnet and magnetic head pulley.

3. Grizzly, 3/4-in. spacing.

4. 1 @ 22-in.×14-ft. conveyor, mounted on tracks to permit moving out of the way for crusher repairs.

5. 1 @ 4-ft. standard cone crusher, 3/4-in. set.

6. 1 @ 22-in.×78-ft. conveyor (level and inclined), 300 f.p.m.

7. 1 @ 3 1/2×10-ft. Symons screen, 5/8×3-in. aperture.

8. 1 @ 22-in.×76-ft. inclined conveyor.

9. 1 @ 4-ft. short-head cone crusher.

10. 22-in.×170-ft. conveyor, +21° slope; 1 @ 20-in.×105-ft. conveyor with hand-propelled tripper; 3-compartment bin, 1 @ 2,000-ton (sulphide) and 2 @ 500-ton (oxide). Capacity to this point, 100 t.p.h. on dry ore; considerably less on wet on account of failure of (3) to keep wet fines from (5). All motors are electrically interlocked so that stoppage of one automatically stops all ahead of it while those following continue running.

11. 2 @ 20×38-in. apron feeders; 2 @ 16-in. conveyors with weightometers (plus 1 @ 16-in. conveyor for one side).

12. 4 rod mills as follows: 1 @ 5 1/2×10-ft. Cole-Bergman, 22 r.p.m., 100-hp. motor; 2 @5× 10-ft. A-C mills, 20 and 22.5 r.p.m., 100-hp. motors; 1 @ 6×10-ft. A-C, 17.5 r.p.m., 150-hp. motor. All mills 3 1/2-in. rods, 0.24% Cr, 0.13% SiO_2, 0.65% Mn, 0.87% C, 0.04% S, 0.02% P.

13. 2 @ 4-in. Wilfley pumps (from 2 primary mills); 1 @ 8×16-in.×75-ft. bucket elevator.

14. 9 Deister tables. Tables yield a small amount of concentrate assaying 70% Pb, 900 gm. Ag and 4% Zn. Tabling at this point desirable in that, with a mill feed fluctuating widely in metal content, flotation feed is kept reasonably constant in assay; also values in Au, Ag and Cu, difficult to float, are recovered.

15. 1 @ 3-in. Wilfley pump.

16. 2 Deister tables.

17. 2 @ 6-in. Wilfley pumps.

18. 2 @ 6×18 1/2-ft. rake classifiers, 2 3/4 in. per ft., 30 s.p.m.

19. 2 @ 6×10-ft. rod mills.

20. 2 @ 24-in. 12-cell M-S subaeration flotation machines, 5 motor-hp. per cell, air at 1 1/2 lb. per sq. in.; (*a*) = cell 1, (*b*) = cells 2, 3; (*c*) = cells 4 to 12. Feed 3% >35-m., 57% <200-m.

21. Hydraulic classifier.

22. 2 @ 4-mat pneumatic cells in parallel, one for sand and one for slimes.

23. 2 @ 6-in. Wilfley pumps.

24. 1 @ 4-mat pneumatic cell.

25. As (24).

26. 2 @ 4-mat pneumatic cells in parallel.

27. 1 Deister table.

28. As (27).

29. 2 @ 10×10-ft. Denver conditioners in series, 7 1/2-hp. motors; 20 min. total contact time.

30. 1 @ 6-in. Wilfley pumps.

31. 2 @ 24-in. 10-cell M-S subaeration flotation machines as (20); (*a*) = cells 1 to 3, (*b*) = cells 4, 5; (*c*) = cells 6 to 10,

32. 1 @ 4-mat pneumatic cell.

33 As (32).

33*a*. 1 @ 4-in. Wilfley pump.

34. 1 Deister table.

34*a*. As (33*a*).

35. As (34).

36. 2 @ 4-mat pneumatic cells.

37. As (33*a*).

FIG. 125. SAN FRANCISCO MINES OF MEXICO, sulphide section.

Capacity: Sulphide ore, 1,600 tons per 24 hr.; carbonate ore, 330 tons.

Assays, recoveries, ratios of concentration: See Tables 93 and 94.

Water comes 1 1/2 mi. from the mine; it is pumped through a 10-in. line at an expenditure of 200 hp., 4 tons per ton of ore in circulation, 60% reclaimed. Storage at plant: 450,000 gal. fresh, 1,600,000 gal. return.

Power: Purchased; comes 68 mi. at 110,000 and 13,000 volts; motors 440-volt, 60-cycle. CONSUMPTION, 31.2 hp-hr. per ton milled.

Labor: Native. Tons per man-shift: operating, 12; repairs, 53.

Running time: 95%; loss due to repairs and power failures.

Building: Sloping site. Wood-frame, masonry and sheet-iron enclosure; cement floors, slope 1/4 in. per ft. Unheated.

Machinery handling: Hand cranes in coarse crushing and concentration sections; power crane in grinding section.

Tailing elevated by Wilfley pumps, then run about 1/3 mi. to storage dams by launders; sand spigots discharge around periphery, slime goes to center.

Transportation: Mines to mills, 1 1/2 to 2 mi. by aerial tram. Railroad spur at property. Lead concentrate shipped 210 mi. @ 8% moisture; zinc concentrate shipped out of country (normally to Europe), 9% moisture.

Cost: Sulphide and oxide milling (1935), $0.85 per short ton.

Legend for Fig. 126:

1. The same apparatus as items 1 to 10 of Fig. 125.
2. 1 @ 24×38-in. pan conveyor; 1 @ 16-in×39-ft. conveyor with weightometer, 90 f.p.m.
3. 1 @ 5×8-ft. Marcy rod mill with 3 1/2-in. rods.
3a. 1 @ 2-in. Wilfley pump.
4. 1 @ 4 1/2×18-ft. rake classifier, 2 3/4-in. slope, 23 s.p.m.
5. 1 @ 5×8-ft. ball mill, 32.5 r.p.m., 2 1/2-in. balls.
6. 1 @ 4-in. Wilfley pump.
7. 1 @ 24-in. 2-cell M-S subaeration machine.
8. 1 @ 4-compartment Deister hydraulic classifier.
9. Separately.
10. 5 Deister sand tables in parallel.
11. 1 Deister sand table.
12. 1 @ 4-in. Wilfley pump.
13. As (4).
14. 1 @ 18-in. 20-cell M-S subaeration machine; (*a*) = cells 1 to 9, (*b*) = cells 10 to 20. Feed 7% >35-m., 42% <200-m. Sulphide concentrate taken from cells 1 to 4.
15. At cell No. 5.

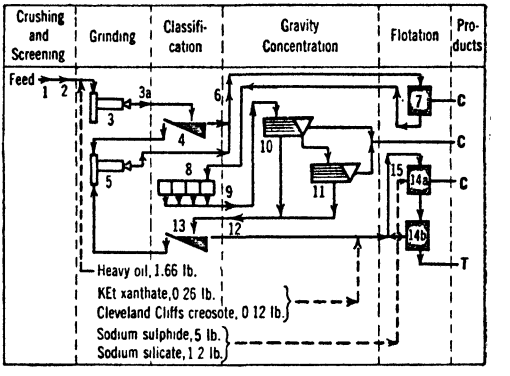

FIG. 126. SAN FRANCISCO MINES OF MEXICO, oxide section.

Summary. SULPHIDE MILL: 3-stage crushing to <1/2-in.; 2-stage grinding with gravity concentrate scalped out on tables between stages. Differential flotation with 3-stage roughing-scavenging in both lead and zinc sections; rough concentrates cleaned twice in both lead and zinc sections and middlings in both sections tabled for lead, before recirculation.

OXIDE MILL: 3-stage crushing to 1/2-in.; 2-stage grinding with flotation and tables in the grinding circuit. Flotation of grinding-plant product by 2-stage rougher-scavenger routing.

The precious metals are the important elements in the lead concentrate, both sulphide and oxide, and grade is sacrificed to recovery. Zinc concentrate, with a long trip to the smelter, is run to a high grade with marked sacrifice of recovery.

International Smelting Co., at Tooele, Utah, has treated mixed oxide-sulphide Pb-Cu-Ag ores intermittently over the period since Feb. 1929 (*IC 6759*). The mill has a rated capacity of 300 tons per day. Feed to the plant is sampling-mill product from a cone crusher set

Table 95. Assays and recoveries at oxide-flotation plant, International Smelting Co.

Material	Assays						Recovery, per cent.			
	Per cent.				Oz. per ton		Cu	Pb	Au	Ag
	Cu	Pb	Fe	Ins.	Au	Ag				
Feed	0.18	18.43	7.32	56.4	0.0567	24.85	.....	.....	.....	.....
Conc	0.36	47.02	13.94	16.7	0.114	58.76	72.2	94.6	74.6	87.7
Tailing	0.08	1.58	6.56	79.69	0.023	4.87	.....	.....	.....	.....

at 3/8-in. This is ground to 1 to 2% >65-m. in one stage in a ball mill in closed circuit with a rake classifier and then floated in 4 parallel rows of 18-in. M-S subaeration machines staged as in Fig. 127. Feed enters cell 2, with ethyl and amyl xanthates, Pentasol (frother), and sodium silicate; sulphide concentrate is roughed off and cleaned as shown. The remaining cells are for oxide flotation; reagents are sodium sulphide and sodium silicate for conditioning, the xanthates for collection and Pentasol. Step addition of reagents is necessary. Reagent consumption is: sodium sulphide, 6 lb. per ton; sodium silicate, 4 lb.; sodium amyl xanthate, 1.5 lb.; ethyl xanthate, 1.2 lb.; Pentasol, 0.30 lb. Variations in feed conditions are compensated for by change in the quantity and places of addition of the sodium sulphide. Assays and recoveries for Sept. 1930 were as given in Table 95.

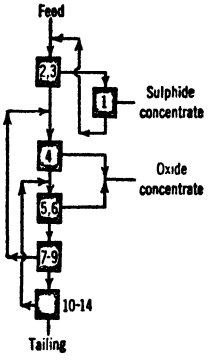

FIG. 127. INTERNATIONAL SMELTING CO., oxide flotation.

A 160-day mill test (*14 MMt 291*) crushing to 3/8-in., jigging at 3/8- to 3/16-in., and 3/16-in. to 14-m.; tabling coarse, medium, and fine sand products from hydraulic classification separately, and floating slime indicated recovery of 88 to 90% of the Cu, 95 to 98% of the Pb; 60 to 65% Fe; 80 to 85% Au; 88 to 93% Ag in the gravity-plant feed and 80% of the slime lead by flotation in a combined concentrate carrying 45 to 55% Pb; corresponding rejection of insoluble was 70 to 83% in the gravity treatment and 80 to 85% in the flotation tailing.

International Smelting & Refining Co., Ophir Hill tailing plant. Fig. 128 (*A TP 1239; 141 ✱5 J 52*).

Location: Ophir, Utah.

Ore: Old gravity sulphide tailing assaying Cu, 0.65%; Pb, 2.2%; Zn, 2.1%; Fe, 3.1%; insol., 58.6%; CaO, 2.0%; Au, 0.005 oz.; Ag, 2.6 oz. per ton. Size varies from coarse sand to sliine of semicolloidal nature. Variation is relatively extreme both vertically and horizontally throughout the dump. Oxidation likewise ranges from 25 to 75% of Pb oxidized. Dump tonnage, 390,000.

Capacity: 720 tons per 24 hr. maximum.

Power: Purchased. Comes 20 mi. at 44,000 volts. 440-volt motors. 110-volt lighting. CONSUMPTION, hp-hr. per ton: scrubbing and agitating, 3.8; conveying and elevating, 0.4; grinding, 11.0; flotation, 3.8; pumping pulps, 1.1; filtration, 1.3; lighting and miscellaneous, 0.8; total, 22.2.

Labor: 15.5 tons per man-shift, total personnel.

Water: Comes 1 mi. by gravity to a 120,000-gal. storage tank giving 150-lb. pressure on line at mill.

Assays: See Table 96.

Recovery: Pb, 90.7%; Cu, 89.9%; Ag, 88%.

Table 96. Assays at Ophir mill

Material	Weight, %	Assays, %						Oz. per ton
		Cu	Pb	Ox. Pb	Fe	Zn	Insol.	Ag
Feed	100	0.75	2.18	0.65	3.2	2.3	55.6	3.16
Conc	12.1	5.54	16.38	.....	13.5	14.6	12.4	23.00
Tailing	87.9	0.09	0.23	0.15	1.7	0.6	61.5	0.43

Legend for Fig. 128:

1. Excavation by contract, using 5/8-cyd. Diesel shovel and 1/2-cyd. gasoline shovel served by a caterpillar bulldozer. Valley walls and floor irregularities cleaned up by drag scraper, supplemented by hand shoveling. Transport to 275-ton mill bin by 5- and 10-ton dump trucks. Bin flat-bottom, 50 ft. long, 15 ft. wide, 11 ft. deep at back, open front to permit ready entry for removal of boulders and wood. Ore manually rilled through spaces left by removable floor boards onto a 36-in.×92-ft. belt conveyor running lengthwise under bin near front at 75 f.p.m. Labor on bin, 2 to 3 men per shift Mixing to maintain uniform feed done in mining, supplemented by selection in withdrawal from bin.

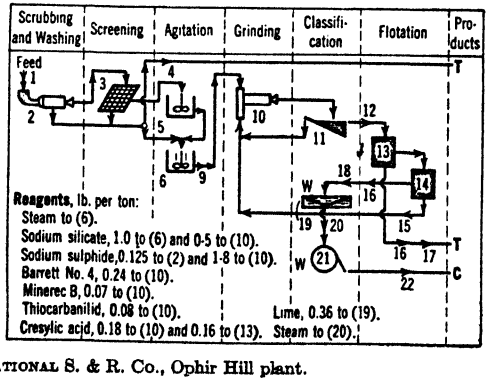

FIG. 128. INTERNATIONAL S. & R. Co., Ophir Hill plant.

Legend for Fig. 128—Continued:

2. 1 @ 8×8-ft. rotary disintegrating washer. Shell, 3/4-in. plate; liners, 1-in. smooth abrasion steel; lifters, staggered 4-ft. lengths 60-lb. rail; 30-in. feed trunnion, grate discharge, quick-opening door on shell for immediate discharge of accumulations of rock, gravel, and trash, when ammeter reading indicates predetermined limit reached (aver. 4.95 tons). 18 such dumps per 24 hr. have been made. No tumbling media charged. 16 r.p.m., 75-hp. motor.

3. 1/2×1/4-in. chip and gravel trunnion trommel mounted on discharge end of disintegrator.

4. By truck to dump.

5. 2 @ 15×15-ft. Goldfield sweep-type agitators, 16 r.p.m., 20-hp. motors, V-belt drive. These serve as surge tanks.

6. 2 @ 20×15-ft. downcast Devereaux agitators, 60-in. ship-type impeller 5 ft. above bottom in 6.5 (diam.) ×10-ft. well, 88 r.p.m., 25-hp. motors, V-belts. Rubber-lined valves and rubber-bushed spigots on discharge line.

7. 1 @ 14-in.×52-ft. bucket elevator, 396 f.p.m., 7.5-hp. motor.

8. Washings from dumped rock.

9. Tonnage sampler.

10. 2 @ 6×8.5-ft. modified Marcy ball mills, 23.5 r.p.m., 150-hp. motors, chain drive. Grates plugged with wood wedges to within 4 slots of axis. 50 to 65% solids, according to size of feed. Charge, 14,000 lb. cast-steel balls; renewals 2-in.; CONSUMPTION, 1 lb. per ton feed; liner, 0.09 lb. per ton. Pulp temp. maintained 80° F. in summer and 90° in winter. Feed: 32% >35-m., 39% <200-m.

11. 2 @ 6×20-ft. duplex rake classifiers, slope 2 1/4 in. per ft., 16 s.p.m., 10-hp. motors, V-belts. Overflow, 22% solids.

12. 2 @ 8×5-ft. surge tanks agitated by circulation through 3-in. Wilfley pumps. Siphon discharge.

13. 2 @ 7-cell 56-in. square Fagergren cells in parallel. Direct drive, 585 r.p.m., 7.5-hp. motors. Temp., 58° F. Feed: 1.7 >65-m., 69% <200-m.; 2.2% Pb. Tailing: 0.4% Pb.

14. 2 @ 1-cell 56-in. sq. Fagergren cleaner cells in parallel. 600 r.p.m., 7.5-hp. motors.

15. 2 @ 3-in. Wilfley pumps, 1,160 r.p.m., 10-hp. motors.

16. Geco automatic sampler.

17. 2 @ 4-in. Wilfley tailing pumps, 875 r.p.m., 15-hp. motors. Lift 25 ft. to 12,000 ft. 12×12-in. tailing launder, fall 1/4 in. per ft., and 1,800 ft. of 12×12-in. V-type distributing launder behind sand banks on tailing pile.

18. 2 @ 2-in. Wilfley pumps, 1,160 r.p.m., 10-hp. 25-ft. lift.

19. 1 @ 30×10 ft. thickener, 1 rev. in 4.75 min., 2-hp. motor. Temp. 60° F.

20. 1 @ 12-in.×30-ft. bucket elevator, 283 f.p.m.

21. 1 @ 8×8-ft. Oliver filter, 0.21 r.p.m., 5-hp. motor. Feed 100 to 120° F. Cake 11 to 18% water according to character of mill feed. Filter cloth water washed about 3 hr. each day to prevent clogging by $CaSO_4$.

22. 100-ton bin. 20- and 30-ton semi-trailer Diesel dump trucks to smelter, 25 mi.

Summary. Disintegration in a rotary washer, one-stage closed-circuit grinding, rougher-cleaner flotation with return of cleaner tailing to the grinding circuit. No attempt at differential separation of sulphides.

Buchans Mining Co., Ltd. Fig. 129 (*112 A 841*).

Location: Buchans, Newfoundland.

Ore: A highly complex heavy sulphide in a barite gangue; average assay: 0.05 oz. Au and 3.5 oz. Ag per ton, 1.5% Cu, 8% Pb, 17% Zn, 8% Fe, 30% $BaSO_4$, about 10% combined quartz and calcite, and small amounts of sericitic schist. Dissemination ranges from dense fine-grained ores with comparatively high contents of chalcopyrite and pyrite and little galena to coarse-grained ore of relatively low iron and copper content. Considerable surface oxidation of the sulphide minerals exists.

Capacity: 1,200 t.p.d.

Assays: See Table 97.

Recovery: See Table 97.

Table 97. Assays and recoveries at Buchans mill (1933)

Material	Assays						Distribution, %				
	Oz. per ton		Percentages				Au	Ag	Cu	Pb	Zn
	Au	Ag	Cu	Pb	Zn	Fe					
Feed.....	0.06	3.4	1.2	9.4	20.8	8.3	100.0	100.0	100.0	100.0	100.0
Lead conc.....	0.14	12.7	1.5	61.9	10.1	4.8	28.7	41.9	14.1	75.1	5.5
Zinc conc.....	0.05	3.7	1.7	5.0	51.0	5.7	29.4	37.1	47.8	18.6	85.4
Copper conc...	0.06	8.9	24.9	11.1	8.1	22.8	0.2	0.5	3.9	0.2	0.1
Pb-Fe conc....	1.58	13.4	0.7	25.6	7.0	26.9	4.6	0.6	0.1	0.4	0.1
Tailing.....	0.045	1.2	0.7	1.0	3.4	.....	37.1	20.0	34.1	5.7	8.9

Ratio of concentration: Pb, 8.8; Zn, 2.9.

Power: About 1/2 purchased and 1/2 generated (hydroelectric); former transmitted 1 1/2 mi. at 6,600 volts, latter 45 mi. at 66,000 volts. Motors 3-phase, 50-cycle @ 440-, 220-, and 110-volt. CONSUMPTION (1933), hp-hr. per ton milled: Crushing and conveying to fine-ore bins, 2.3; grinding and classification, 17.8; flotation, 18.1; pumping (pulp), 10.0; concentrate handling, 4.6; lighting and miscellaneous, 1.4; total, 54.2. TOTAL COST, 11.3¢ per ton.

Water: Pumped 4,400 ft. from river.

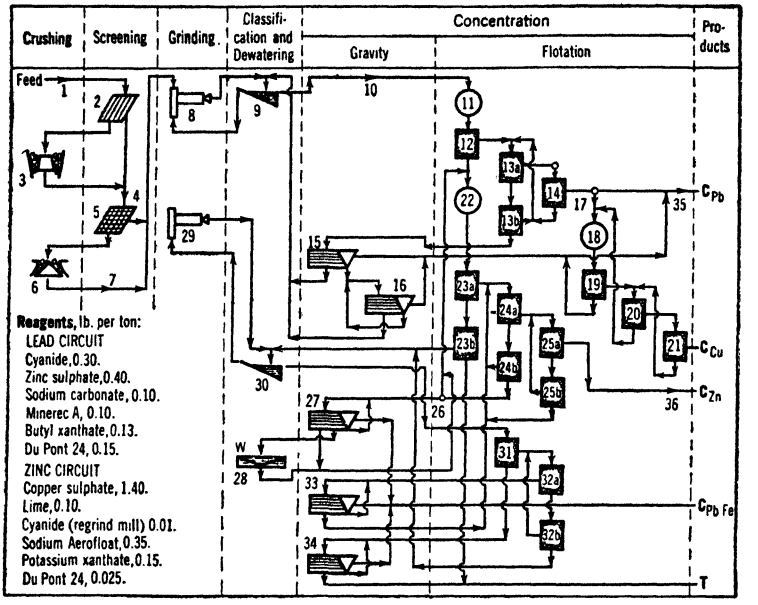

Legend for Fig. 129:

1. 11-in. underground grizzlies; 250-ton surface bin; 42-in. apron feeder.

2. Grizzly, 3-in. openings.

3. 1 @ 16-in. gyratory crusher.

4. 1 @ 42-in. conveyor, 33 f.p.m. (wood picked); Merrick weightometer; 39-in. Cutler-Hammer suspended magnet and 36×44-in. Dings magnetic head pulley.

5. 1 fixed screen, 1 1/2-in. round-hole plate, and 1 @ 4×8-ft. Hum-mer in parallel.

6. 1 @ 4-ft. Symons cone and 1 @ 4-ft. Symons vertical disk crusher in parallel.

7. 1 @ 24-in. belt conveyor; 1 @ 16×7-in. bucket elevator, buckets spaced 18 in., 370 f.p.m.; chain-and-bucket sampler; 24-in. belt conveyor with traveling tripper; 2 @ 1,200-ton bins with 16 @ 18-in. apron feeders, 4 @ 18-in. gathering conveyors, and 4 @ 18-in. mill-feed conveyors. Mill feed is 2% >1-in., 27% >1/2-in., 38% <1/4-in.

8. 2 @ 8×5-ft. and 2 @ 8×6-ft. conical ball mills, 18 1/2 r.p.m., 225-hp. low-speed (300 and 429 r.p.m.) synchronous motors, Falk couplings and herringbone gears. Forged chrome-manganese steel balls, 2/3 @ 3 1/2- and 1/3 @ 4-in. renewals, 1.05 lb. per ton; manganese-steel wedge-bar liners, 0.145 lb. per ton. Grinding to 90% <200-m. (100 *mog*); capacity of 5-ft. mill is 290, and that of 6-ft. mill 340 t.p.d. with circulating loads of 500 to 600%.

9. 4 @ 8×23-ft. rake classifiers.

10. 4-in. Wilfley pump; distributor.

11. 2 @ 12 (diam.) ×6-ft. surge tanks.

12. 4 @ 16-cell 24-in. M-S standard machines in parallel.

13. 2 @ 6-cell 24-in. M-S standard machines in parallel; *a* = cells 1 to 3, *b* = cells 4 to 6.

14. 4 @ 4-cell Kraut machines in parallel.

15. 10 Deister roughing tables.

16. 4 Deister cleaning tables.

17. Lead concentrate routed thus when high in copper.

18. 1 @ 12 (diam.) ×6 1/2-ft. conditioner.

19. 2 @ 4-cell Kraut machines in parallel.

20 1 @ 10-ft. Southwestern air-lift machine.

21 1 as (20).

22. 2 as (11).

23. 5 as (12); *a* = cells 1 to 8, *b* = cells 9 to 16.

24. 3 @ 8-cell 24-in. M-S standard machines in parallel. *a* = cells 1 to 5, *b* = cells 6 to 8.

25. 2 as (24).

26. A portion of primary cleaner tailing here by-passed to table circuit.

27. 8 Deister tables.

28. 1 @ 44×10-ft. thickener.

29. 1 @ 5×8-ft. A-C ball mill, 100-hp. motor.

30. 1 @ 6×21 2/3-ft. rake classifier.

31 1 @ 8-cell 24-in. M-S standard machine.

32. 1 @ 8-cell Fagergren machine; *a* = cells 1 to 4, *b* = cells 5 to 8.

33. 4 Deister tables. Conc., 159 tons per yr., aver. 1.69 oz. Au, 12.2 oz. Ag, 23.3% Pb, 6.1% Zn, 26.9% Fe.

34. 2 Deister tables. 176 tons per yr. of concentrate assaying 3.22 oz. Au, 24.9 oz. Ag, 6.8% Pb, 2.8% Zn, 37.1% Fe.

35. 2 @ 44×10-ft. thickeners (lime added); 1 @ 12×14-ft. Dorrco filter, cake 9.4% water; 1 @ 275-cu. ft. bin; 1 @ 5×34-ft. H-8 Ruggles-Coles drier, 7 r.p.m., 20-hp. motor; 7-ft. cyclone with No. 21 Clarage fan, 750 r.p.m., 5-hp. variable-speed motor. Drier discharge, 4% water.

36. 2 @ 44×10-ft. thickeners (lime added); 2 @ 12×14-ft. Dorrco filters, cake 8.9% water, 295 tons per filter day; 1 @ 275-cu. ft. bin; 2 @ 6×35-ft. H-10 Ruggles-Coles driers, 7 1/2 r.p.m., 25-hp. motors; 2 @ 8-ft. cyclones with No. 21 Clarage fans, 750 r.p.m., 7 1/2-hp. variable-speed motors. Drier discharge, 5% moisture, 395 tons per drier day; at 500 tons per drier day discharge contains 5.3% moisture.

FIG. 129. BUCHANS MINING CO.

Labor: Operating, men per shift: crushing, 3; grinding, 1; flotation, 2 1/3; pumping, 1; concentrate handling, 2 2/3; clean-up, 1; supervision, 1; total, 12, or 33.3 tons per man-shift; repairs and maintenance, 1, or 400 tons per man-shift.

Mill building: Site substantially level. Steel-frame, concrete floors, corrugated transite covering. Steam heat at 1 to 10-lb. pressure to radiators and unit heaters; 37,500 sq. ft. of radiating surface required to heat 3,020,000 cu. ft. of building (203,400 sq. ft. of roof and side walls) during the cold months (30° F. aver. temp.; 6 to 16° aver. minimum). Average annual cost of heating, 3 1/2¢ per ton milled; cold-weather cost, 9¢ per ton.

Costs (1933), ¢ per ton milled: Crushing and conveying, 40; grinding and classifying, 7.3; flotation, 58.4 (reagents 48.9¢ of this); concentrate handling, 9.8; power, 11.9; heat, water and light, 5.2; miscellaneous supplies, 1 0; testing, sampling, and assaying, 3.8; supervision, 2.0; total, $1.03.

Summary. Two-stage crushing to 1-in. ball-mill feed. One-stage grind in ball mills to 100 *mog.* Lead-copper flotation by roughing and 2-step cleaning with cleaner tailing scavenged for lead on tables and reground before recirculation. Lead depressed from lead-copper bulk concentrate. Zinc floated by rougher-scavenger routing with 2-step cleaning of concentrate. Zinc middling reground and refloated in a separate circuit, and a lead-iron concentrate skimmed out of the float before return to the zinc-cleaner circuit.

This flowsheet is an interesting modification of standard procedure for complex ores to adapt to unusual ore and smelter conditions. Galena is sluggish owing to surface oxidation and will neither float to a satisfactory extent originally nor will that floated under intense roughing conditions refloat wholly under the mild treatment in the cleaners that is necessary to make a lead concentrate of required grade; hence tables must be used to aid lead recovery. Iron, on the other hand, is not sufficiently depressed under the intense flotation conditions required to bring up all of the floatable lead in the zinc circuit, and is, therefore, removed from the intensely floated zinc-scavenger froth by tabling, the practice being rendered economic by the presence of sufficient gold, silver, and lead that separate with it to render the concentrate salable.

Callahan Zinc-Lead Co., Duquesne mill. Fig. 130 (*A TP 1410*).

Location: Near Nogales, Ariz.

Ore: Galena, chalcopyrite, sphalerite, pyrite with limestone, quartz and garnet; relatively coarse dissemination, sulphides largely liberated at 65 *mog.*

Capacity: 120 t.p.d.

Assays: See Table 98.

Recoveries: See Table 98.

Table 98. Assays and recoveries at Callahan Zinc-Lead Co., Duquesne mill

Material	Assays				Distribution, %			
	Ag, oz.	Cu, %	Pb, %	Zn, %	Ag	Cu	Pb	Zn
Feed	4.9	1.0	2.9	11.5	100.0	100.0	100.0	100.0
Bulk Cu-Pb conc	71.3	12.1	44.1	6.6	93.0	87.0	94.0	3.7
Cu conc	9.9	28.0	3.4	5.5	7.6	81.1	5.0	2.5
Pb conc	130.3	2.4	71.0	3.2	85.4	5.9	89.0	1.2
Zn conc	1.3	0.8	0.6	55.7	4.0	7.8	4.1	91.9
Tailing	0.19	0.07	0.08	0.69	3.0	5.2	1.9	4.4

Legend for Fig. 130:

1. <3/4-in. from crushing plant.
2. 1 @ 7-ft. × 36-in. conical ball mill.
3. 1 @ 36-in. rake classifier, 65 *mog*, *p*H 7.8, 35% solids.
4. 1 @ 8-cell No. 18 Special Denver Sub-A machine; *a* = cell 2, *b* = cells 3 to 5, *c* = cells 6 to 8, *d* = cell 1.
5. 1 @ 6 × 6-ft. conditioning tank, 26% solids, *p*H 11.2.
6. 1 as (4); *a* = cell 1, *b* = cell 2, *c* = cells 3 to 5, *d* = cells 6 to 8.
7. 1 @ 3-cell No. 18 Special Denver Sub-A machine.
8. 19% solids.
9. 1 @ 5-cell No. 18 Special Denver Sub-A machine. *a* = cell 2, 22.5 cu. ft. capacity, 20-min. time-factor, no overflow, *p*H 9.7 to 10.2; *b* = cells 3 to 5, *c* = cell 1.
10. 11 lb. per ton of concentrate.
11. 4 lb. per ton of concentrate.

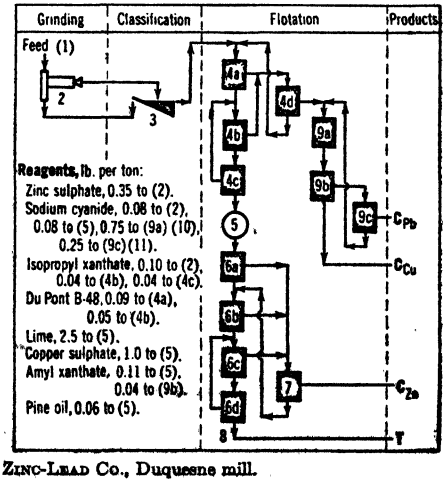

FIG. 130. CALLAHAN ZINC-LEAD CO., Duquesne mill.

Summary. Rougher-scavenger routings for making Pb-Cu bulk and zinc concentrates from the primary stream, with one cleaning of each. Clean bulk concentrate separated by depressing chalcopyrite with a high concentration of cyanide ion (Sec. 12, Arts. 10 and 47).

30. MAGNESIUM

Uses. Magnesium is used in metallic form in explosives, starshells and flares, and for high-intensity lighting in photography; as an ingredient of Thermit; as a catalyst; as a dehydrator for oils; and as a deoxidizer and scavenger in purification of nonferrous metals. Its primary use, however, is in light-weight high-magnesium (90 to 95%) alloys for automobile and aircraft construction. Such alloys have a higher tensile strength pound-for-pound than steel. They are also used for making large and intricate castings, which are much stiffer than the corresponding alloys of aluminum and have the same tensile strength.

Ores. The economic minerals are the anhydrous sodium-magnesium chloride obtained from brines, carnallite, magnesite, and dolomite.

Production is increasing rapidly.

Prices have dropped more or less steadily as the technique of production has been perfected. Average price, per lb., 99.8% ingots: 1929, 56¢; 1932, 29¢; 1937, 30¢; 1939, 30¢; 1938, 27¢; 1942, 22.5¢.

Treatment. Concentration of magnesium minerals other than hand picking of magnesite with or without cobbing was not practiced pre-war, but flotation of magnesite from silicates is reported as a laboratory procedure (Sec. 12, Art. 52), and promising results have been obtained by sink-float (Sec. 11, Table 94). The usual commercial methods comprise electrolysis of relatively pure fused compounds, $MgCl_2$, the double chloride of Mg and Na or K, or of MgO dissolved in a fused bath of mixed Mg, Ba, and Na fluorides. Considerable war-time production was effected by distillation from magnesium oxide or from calcined dolomite at very low pressures; the comparative economy of the method is not yet established. Sea-water brines were also a war-time source of electrolytic-tank feeds.

31. MANGANESE

Uses. Manganese is not used commercially in the free state. Its greatest use is in the steel industry where it is introduced in the form of the iron alloys, FERRO-MANGANESE, containing about 80% Mn, and SPIEGELEISEN, containing 15 to 30% Mn. Probably the next most important use of manganese is as the dioxide (MnO_2), which acts as a depolarizer in dry batteries. This calls for a very high grade product containing about 80% MnO_2 and less than 1% iron. Other uses of manganese compounds are: oxidizing agent in the manufacture of chlorine, bromine, and disinfectants; drier in paints and varnishes; coloring agent in calico printing and dyeing; in making glass, pottery, brick, and paints. Manganese bronze is an alloy with copper which may or may not contain some iron; silver bronze, an alloy with aluminum, zinc, copper, and silver; manganese-titanium, an alloy of these metals with iron for use in the manufacture of special steels. See *IC 6768* and *IC 7145* for details.

Table 99. Approximate tonnages of manganese ore, including fluxing ore and zinc residues, United States, 1913–1930, incl., long tons (*IC 6768*) *a*

State	Ore containing 35% or more Mn	Ore containing 10 to 35% Mn	Ore containing 5 to 10% Mn
Arizona	52,971	37,448	21,449
Arkansas	61,419	108,479	147
California	63,328	359	.....
Colorado	28,853	694,000	71,426
Georgia	47,979	157,326	44,890
Idaho	5,337	1,839	.....
Michigan	.....	448,013	413,506
Minnesota	.....	2,715,446	7,088,693
Montana	682,884	61,575	.....
Nevada	31,618	724,086	7,987
New Jersey *b*	.....	2,069,000	.....
New Mexico	22,650	349,479	166,996
Tennessee	11,978	4,961	96
Utah	10,742	18,523	496
Virginia	66,458	51,787	52,400
Washington	16,275	.....	.....
Wisconsin	.....	.....	1,819,172
Others	14,215	12,486	.....
Total	1,116,707	7,454,855	9,687,258

a Figures mostly from *Mineral Resources.*
b Zinc residues from franklinite ore.

Ores. The usual economic minerals are pyrolusite, psilomelane, braunite, and wad. The manganese minerals as mined have specific gravities of 3.5 to 5, with average between 3.5 and 4; they are usually weakly magnetic. The minerals occur as nodules, lumps, pockets, stringers, or lenticular masses irregularly scattered through residual clays and weathered rocks. Domestic deposits are small. The common associates, beside the clay, are limonite, barite, ocher, bauxite, silica, and limestone. Manganiferous iron and manganiferous zinc ores are also important sources of the metal. Rhodochrosite occurs at Butte, Mont., in economic quantities.

Ores are graded as follows: (1) Battery ore, exceptionally high MnO_2 content; (2) ferromanganese stock, containing a minimum of 45% MnO_2 (aver., 48%), with Mn : Fe ratio of not less than 7 : 1 (usually 8 : 1), silica from 7 to 10%, and phosphorus 0.12 to 0.2%; (3) spiegeleisen stock, containing from 10 to 45% Mn and higher iron than in grade (2); (4) pig-iron stock, containing from 7 to 10% and upward of Mn.

The manganese in ferromanganese stock is paid for on a sliding scale depending on the manganese content; this practice is based on the fact that silica must be slagged off in making the ferromanganese and that the cost of such slagging-off is appreciable. Langhorne (*1928 Proc. Am. Manganese Prod. Assoc. 126*) states that it costs $10 more per ton of product to make ferromanganese from stock assaying 14.3% SiO_2 than from stock assaying 5.72% SiO_2; this amounts to 11¢ per unit of manganese on 42.3% Mn stock as against 48.6% Mn stock.

Production of the various classes of ore in the United States is given in Table 99. United States production by years is given in Table 100 and world production in Table 101. Analyses of various high-grade imported ores are given in Table 102.

Table 100. United States production of high-grade (>35% Mn) manganese ore (long tons)

	1921	1929	1932	1935	1936	1937	1938
Montana	11,129	12,382	15,479	10,823	16,156	26,744	11,936
Tennessee	139	42	.....	1,893	3,539	3,575	4,130
Georgia	.....	2,521	200	6,960	3,821	689	3,058
Arkansas	728	569	1,306	3,809	4,557	3,931	2,987
Virginia	717	3,051	525	2,452	1,361	2,265	2,242
New Mexico	*b*	*b*	*b*	*b*	*b*	878	560
Alabama	*b*	*b*	*b*	*b*	*b*	289	202
W. Virginia	717	3,051	525	2,452	1,361	1,800	163
Others *a*	328	41,726	267	491	572	70	43
Total	13,531	60,379	17,777	26,428	32,119	40,241	25,321

a Includes Ala., Tex., Calif., Ariz., Idaho, Minn., N. C., Nev., Utah.
b Included in others.

Table 101. World production of manganese ore in thousands of metric tons (*MI*) *g*

	Grade % Mn	1929	1932	1935	1936	1937	1938
U.S.S.R.	41 to 48	1,415.0	832.1	2,384.6	3,002.0	2,700.0	2,900.0
British India	47 to 52	1,010.2	216.0	651.7	826.5	1,068.4	901.6
S. Africa	30 to 51	9.3	nil	95.4	258.2	631.2	551.7
Gold Coast	50+	414.8	51.5	405.1	417.6	535.5	363.1
Brazil	38 to 50	316.2	20.3	41.8	156.2	253.7	222.0
Egypt	30+	191.5	0.3	87.3	135.0	186.3	*b*
Cuba	36 to 50	1.0	9.8	*c* 44.7	*c* 38.5	131.3	123.8
Czechoslovakia	17	96.5	33.5	71.4	93.0	105.3	*b*
Japan	49 to 51	18.4	26.2	71.7	67.8	*b*	*b*
Morocco (Fr.)	40 to 50	13.2	4.0	24.9	38.4	79.1	84.3
China *e*	45 to 46	41.9	20.7	0.8	23.8	51.5	1.2
Rumania	30 to 36	35.0	5.1	19.8	30.6	50.7	*b*
Austria *d*	.....	78.2	13.2	33.8	45.0	*b*	*b*
Italy	34 to 47	9.9	6.4	9.1	24.1	33.5	50.0
Malaya	23	32.7	9.4	28.6	37.4	33.3	32.5
Philippines *e*	.....	.....	.....	0.5	0.3	12.2	49.4
United States	35+	61.3	18.1	26.9	32.6	40.9	25.7
Hungary	35 to 48	19.0	1.5	6.3	27.2	25.1	22.2
Dutch East Indies	50 to 55	20.9	8.3	12.4	8.6	11.1	*b*
Others *a*	.....	32.5	7.3	8.5	*b*	*b*	*b*
Minor producers	.....	22.0	11.2	74.7	49.3	43.4	43
World *f*	.....	3,840.0	1,289.3	4,100.0	5,310.0	6,068.0	5,669.0

a Spain and Sweden.
b Not available.
c Exports received in U. S. during year.
d Estimated.
e Exports.
f Includes estimates for figures not available.
g See Table 102.

Treatment. The method of concentrating depends upon the character of the ore deposit. When the ore is nodular, in easily disintegrated clay, and the nodules are of high grade, simple washing by log washer or wash trommel, supplemented usually by hand picking, is all that is ordinarily necessary.

Table 102. Analyses of imported high-grade manganese ores (*After Langhorne, 128 Proc. Am. Manganese Prod. Assoc. 126*)

Source	Assays, per cent.					
	Mn	Fe	SiO_2	Al_2O_3	P	Bases
Africa	46.7	6.25	3.15	4.10	0.14	1.50
India	50.5	6.22	8.28	1.83	0.09	1.5
Brazil	48.7	4.40	4.60	2.95	0.12	2.5
Chile	48.7	0.73	9.40	1.69	0.008	.....
Russia	49.2	0.64	7.85	1.67	0.22	.....
Montana, raw rhodochrosite	38.0	2.30	5.37	0.65	0.04	4.95
Montana, roasted rhodochrosite *a*	54.7	3.50	7.75	1.25	0.05	5.5

a But see Fig. 138.

At EUREKA Co., Batesville, Ark., the ore is washed in a 30-ft. 2-log washer at 20 r.p.m. The log product is sent to a wash trommel (16-m.), then sized at 1/2-in. into coarse and fine shipping grades. The washed product contains about 42.5% Mn. The EMBREE IRON ORE Co. plant, Fig. 134, is more elaborate, including jigging of washer products.

When siliceous and other foreign matter occurs in the nodules, a more complicated plant involving crushing is necessary. The HY-GRADE mill, Fig. 136, is typical. When the ore occurs in hard rock, which must be mined with the manganese minerals, the flowsheet is commonly graded crushing followed by jigging and tabling. The PHILIPSBURG MINING Co. (Fig. 131) plant is an ingenious departure.

Wash ores, to be readily amenable to treatment, should carry better than 3% of manganese mineral. Leaner material can be handled, if it can be graded up by picking. In general the wash ores average about 10% Mn content. Some deposits run as high as 25 to 35% Mn. The character of the clay is important; if tenacious, capacity and grade of product will be much reduced and tailing loss high.

Manganese minerals have specific gravities high enough for separation from ordinary gangues by gravity concentration; they are also sufficiently permeable for high-intensity magnetic concentration, and are floatable with fatty-acid collectors. Sink-float separation has been tested (Sec. 11, Table 94); it should be useful on some of the washed material now picked and jigged.

Testing. Results of an extensive testing program on domestic ores are recorded in *IC 6768.*

Philipsburg Mining Co. Fig. 131 (*Q; IC 6768; 124 J 647*).

Location: Philipsburg, Mont.

Capacity: 75 to 100 t.p.d.

Ore: Nodules of soft pyrolusite and psilomelane in a gangue of quarts, kaolin, calcite, and iron oxides.

Assays: Feed, 30 to 35% MnO_2; concentrate, 70% MnO_2, <0.2% P, <6% Fe, ±10% SiO_2; tailing, 10 to 20% MnO_2.

Recovery is about 80% with no circulation of middling.

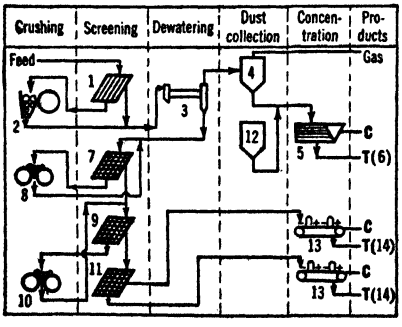

Legend for Fig. 131:

1. Grizzly, 1 1/2-in. spaces.
2. 1 @ 9×16-in. jaw crusher.
3. 5×30-ft. Ruggles-Coles drier, reducing from 12% to 3% moisture.
4. 84-in. cyclone.
5. Plat-O slimer.
6. Impounded.
7. Leahy screen, 1/2-in. aperture.
8. 30×14-in. rolls.
9. Colorado Impact screen, 6-m.
10. 30×14-in. rolls.
11. Leahy screen, 14-m.
12. 84-in. cyclone taking dust from rolls and screens.
13. 3-pole Wetherill magnet, 30,000-, 60,000-, and 100,000-ampere turn magnets.
14. About 20% MnO_2. Impounded.

FIG. 131. PHILIPSBURG MINING Co., Trout mill.

Summary. Three-stage graded crushing, dry; dry high-intensity magnetic separation.

Moorlight. This mill, in the same district as the TROUT mill, uses substantially the same flowsheet (*Q, 1928 Proc. Am. Manganese Prod. Assoc. 34*); concentrate assays 48% Mn (70% dioxide) and 10% SiO_2; feed carries 6 to 10% manganite.

Tschiaturi manganese mill. Fig. 132 (*84 ME 619*).

Location: Caucasus region, Russia.
Ore: Pyrolusite (oölitic) cemented with sand, lime, and clay.
Capacity: 50 tons per hr.
Assays: Feed: 39% Mn; concentrate, 52% Mn; tailing, 18.7%.
Recovery: About 80%.
Water: 1.4 tons per ton of feed, net; 4.6 tons per hr. gross.

Legend for Fig. 132:

1. 8-in. limiting grizzly at mine.
2. 1 @ 30×32-in. corrugated rolls, 3.1-in. set.
3. 1 submerged-screen washer, 1.5-in. aperture.
4. Corrugated rolls, 1.6-in. set.
5. Bucket elevator.
6. As (3), 7/8-in. aperture.
7. 2 as (3), 0.31-in. aperture.
8. 1 @ 3-compartment piston-type fixed-sieve jig.
9. 2 as (8).
10. 1 smooth-faced rolls, 0.31-in. set.
11. 3 Hancock jigs.
12. 2 @ 2 1/2×6-ft. vibrating screen, 1/16-in. aperture.
13. 1 @ 9-ft. thickener.
14. 4 shaking tables.
15. Hutch product.
16. Middling.

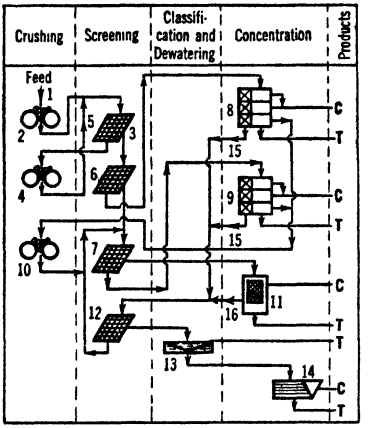

FIG. 132. TSCHIATURI manganese mill.

Summary. Two-stage crushing to about 1-in. 3-stage jigging of sized feeds, with tabling of primary hutch middling after thickening.

Manganese Corporation of America. Fig. 133 (M. T. Singleton, *134 J 204*)

Location: Cartersville district, Ga.
Ore: Principally psilomelane in angular fragments with similar boulders and fragments of chert and quartzite in residual clay.

Legend for Fig. 133:

1. Flat perforated plate (3 1/2-in apertures) over a pump sump.
2. Dredge pump.
3. Dewatering cone.
4. 1 @ 25-ft. Allis-Chalmers log washer.
5. Bowl-rake classifier; overflow <200-m.
6. About 1/2 mi. by cars; track hopper; apron feeder; belt conveyor.
7. Traylor vibrating screen, 5/8-in. aperture.
8. Picking belt.
9. Cone crusher.
10. Log washer.
11. 5 Traylor vibrating screens in series making 5 jig feeds from 14-m. to <5/8-in.
12. 5 @ 3-cell Woodbury jigs. Cup products from first two cells are concentrate; cup from third cell is middling.
13. Rolls.
14. Dewatering cone.
15. 4 @ 5-spigot Fahrenwald classifiers in series-parallel arrangement.
16. 20 Deister tables, each working on a separate classifier-spigot product.
17. Drag dewaterer.
18. Rod mill.
19. Pump.

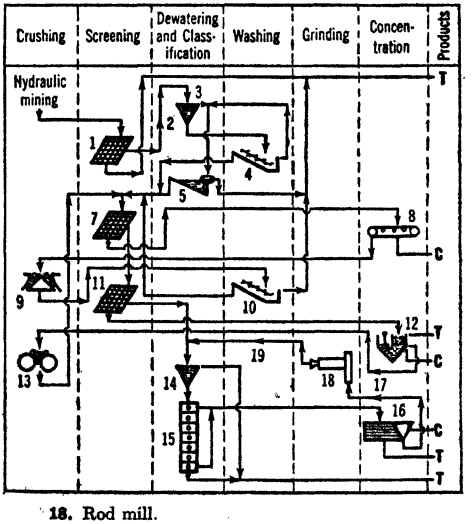

FIG. 133. MANGANESE CORP. OF AMERICA.

Summary. Crude washed in a log-washer and bowl classifier to remove clay; hand picked for high-grade concentrate; crushed to <5/8-in. in one stage in closed circuit with a

log-washer; <5/8-in. material screened into five sizes down to 14-m. and the various sizes jigged separately; <14-m. classified extensively and the classified products tabled; jig middling recrushed and returned to primary circuit; table middling reground and returned to table circuit.

Embree Iron Ore Co. Fig. 134 (*IC 7145*).

Location: Embreeville, Tenn.

Ore: Psilomelane as nodules, softer lumps and light, porous particles; also some soft plumbagolike pyrolusite and wad; gangue is predominantly clay with some chert or quartzite grains. The nodules and lumps also contain very fine silica, limonite, and iron in an unidentified form.

Capacity: Washing plant, 18 tons per hr.; jig plant, 10 tons per hr.

Assays: Washing plant feed and log-washer tailing not sampled, but grab samples of latter range from about 2 to 11% Mn. Average washing-plant concentrate for 1939 assayed as shown in Table 103, item *Feed;* this is concentrating-plant feed. Ratio of concentration was 6 : 1. Jig-plant results are also shown in Table 103.

Table 103. Metallurgical results for jig plant, Embree Iron Ore Co.

Material	Dry long tons	Weight, per cent.	Assays, per cent.		
			Mn	SiO_2	Fe
Feed *a*	11,417	100.0	30.43	21.65	13.97
Jig-and-belt conc	6,831	59.8	38.47	10.39	12.28
Chemical ore	518	4.5	47.25	8.05	4.95
Combined conc	7,349	64.3	39.90	10.22	11.76
Stockpile	1,427	12.5	23.20	34.00	10.00
Jig and picked tailing *b*	2,641	23.2	10.24	46.78	22.26
Combined tailing	4,068	35.7	14.78	42.39	17.95

a Washing-plant concentrate.

b By difference. Calculation contains an assumption as to stockpile tonnage. Arithmetic average of jig tailing was 14.9% Mn.

Legend for Fig. 134:

1. Dump trucks; hillside hopper (*a*, Fig. 135) 48 ft. long with sloping bottom 45° at upper side and 30° toward front, plank on round timber.

2. Transverse horizontal stationary washing screen (Fig. 135). Aperture, 3 1/2-in. square, 5/8-in. round rod. A nozzle stream sluices feed from hopper to screen and washes the oversize.

3. Horizontal steel-rail grizzly, 4×10-ft., 1-in. aperture. Lump oversize sledged to convenient size for handling. 3 men on this and (2).

4. 1 @ 25-ft. 2-log washer; slope, 2 in. per ft., 18 r.p.m.; feed entry about 2 ft. from overflow; spray on upper 8 ft.; 20-hp. motor drives washer and picking belt (5), 19-hp. average consumption.

5. Picking belt, 18 in.×28-ft., 30 f.p.m., 4 men picking rock and high-grade (70% MnO_2) concentrate.

6. By truck @ 1 mi. to storage bin similar to (1); belt conveyor.

7. Compound trommel: 36 in. × 10 ft., 3/4-in. aperture cloth; 44 in. × 9 1/2 ft., 1/4-in. aperture; 52 in. × 9 ft., 1/16×1/4-in. and 3/32×1/4-in. slotted cloth. Spray on outside screen. Slope, 1 1/4 in. per ft.; 10 r.p.m.

8. Picking belt, 18 in. wide, 30 f.p.m., 3 men picking waste and high-grade chemical ore.

9. Stockpile; can be concentrated almost to grade of present plant concentrate, but too fine for steel-plant use.

10. 3 1/2×8-ft. trommel, 3/16- and 7/16-in. round holes.

11. 4-cell McLanahan and Stone pulsion jig; each compartment, 48 in. long × 27 in., is independent and fed by a separate sized product as indicated.

12. Picking belt like (8); 1 man picking waste.

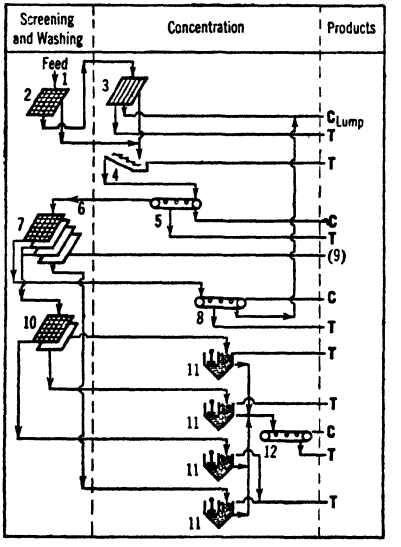

FIG. 134. EMBREE IRON ORE CO.

Transportation: Dump truck 0.65 mi. from mine to washing plant and 1 mi. thence to jig plant; concentrate, 12 mi. by truck to railroad; cost 50¢ per ton. Freight to Birmingham, Ala., is $1.80 per ton for less than 43% Mn and $2.90 per ton for higher grade.

Water: Washing plant, 500 to 600 g.p.m.; concentrating plant, 200 g.p.m.

Power: 213 hp. average total, including water supply; 71.1 kw-hr. or $0.88 per dry long ton of concentrate.

Labor: 8 men per shift at washing plant, 7 men and superintendent at jig plant.

Building: For general arrangement of plant see Fig. 135.

Cost of a plant to produce about 10,000 tons of concentrate per year was (1938) about $20,000 for a shovel, bulldozer, and dump trucks, and $40,000 for the washing-concentrating plant.

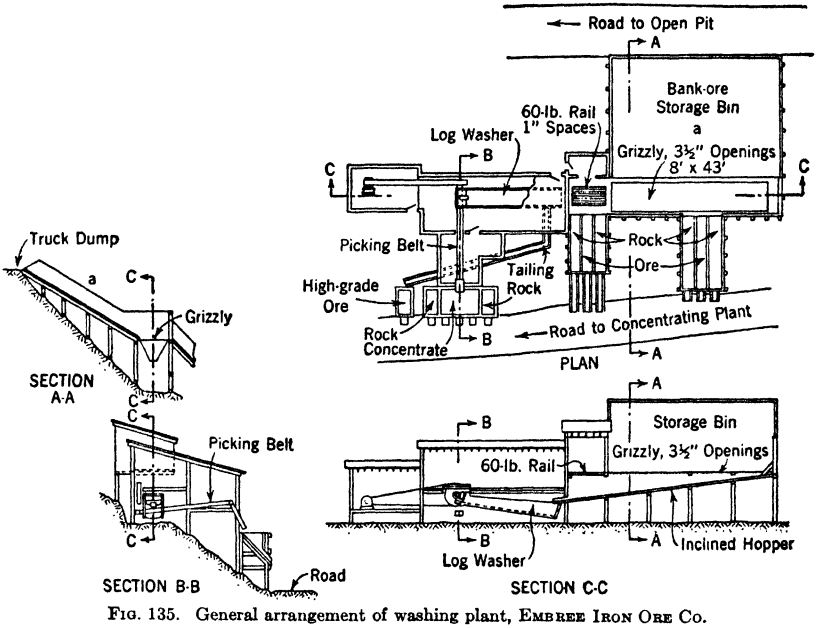

FIG. 135. General arrangement of washing plant, EMBREE IRON ORE CO.

Summary. Washing on a grizzly and in a log washer; washed lump concentrated by hand-picking and jigging.

Hy-grade Manganese Production and Sales Corp. Fig. 136 (*6768 IC 92*).

Location: Cedar Creek, near Woodstock, Va.

Ore: Pyrolusite and psilomelane with sandstone, chert, and quartz in limonitic clay.

Legend for Fig. 136:

1. Grizzly, 4 1/2-in. spaces.
2. Trommel, 1 1/4-in. holes.
3. Elmore washer.
4. Gyratory crusher.
5. Rolls, set 1/2-in.
6. Hum-mer screen, 1/2-in. aperture.
7. Hum-mer screen.
8. Drag classifier.
9, 10, 11. Hum-mer screens.
12, 13, 14. Harz-type jigs.
15. Hardinge ball mill.
16. Hydraulic classifier. Installation of this classifier lowered the tailing of tables (10) from 11% Mn to 2% Mn.
17. 3 shaking tables, each taking a separate spigot product.
18. 3 dewatering cones.
19. 2 slime tables.
20. James jig.
21. Middling.

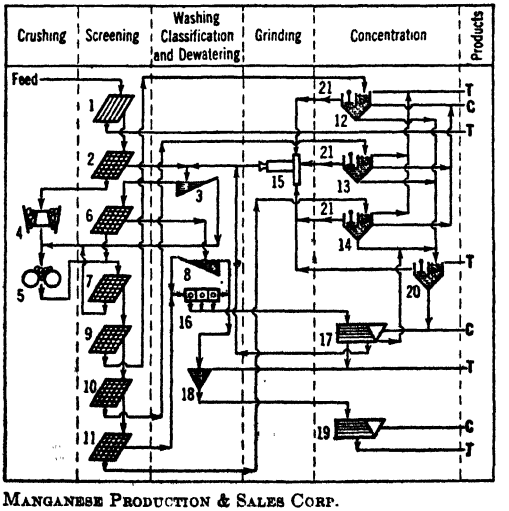

FIG. 136. HY-GRADE MANGANESE PRODUCTION & SALES CORP.

Summary. Two-stage crushing to <1/2-in.; all-gravity concentration by jigging of coarse sizes, and tabling of fine after classification.

Chocolate clays. The so-called chocolate clays of the BATESVILLE-CUSHMAN field in Ark. form a part of the matrix of the wash ores. The color is due to a manganese content of about 10% occurring as very finely disseminated oxide. It is normally discarded in washing. MILLER AND RINEHART (*125 J 899*) have operated a plant in which this material is disintegrated and washed in 30-ft logs, which discard overflow; log sand is screened at 1/8-in. (it has already passed 1/4-in.), oversize is crushed in rolls and recirculated, undersize is tabled. Table concentrate is sintered in a rotary kiln. Product assays about 28% Mn, 20% Fe, 12% SiO_2, 5% Al_2O_3, and 6% CaO; it is used as additional manganese in pig-iron furnaces.

Cuban-American Manganese Corp. Fig. 137 (*153 A 97*).

Location: Cristo, Oriente Province, Cuba.

Ore: Pyrolusite, psilomelane, manganite, and (rarely) wad in altered tuffs, with quartz, calcite, chlorites, sericites, iron oxides, clay, etc.; also greater or less amounts of soluble carbonates.

Capacity: 1,000 long tons (dry) per 24 hr.

Assays: Feed, 18% Mn; sinter, 51% Mn, 9% SiO_2.

Recovery: 86.8%.

Ratio of concentration: 3.3 : 1.

Water: From river, pumped 1/2 mi., 150-hp. motors. CONSUMPTION, 8 tons per ton milled; 70% re-used.

Power: Purchased; comes 1 1/2 mi. at 2,300 volts. Motors, 440-volt, 60-cycle.

Labor: Cuban, 2.37 tons per man-shift, operating; 12 tons per man-shift on repairs.

Running time: 96%; loss due to power failures and general repairs.

Building: Sloping site. Steel frame, sheet-iron cover. Unheated. Floors in wet part slope 1/16 in. per ft.; cement.

Machinery handling: Chain blocks throughout.

Transportation: Steam locomotive 1 mi. from mine to mill; concentrate (dry sinter) shipped 10 mi. to dock, thence to U. S.

Legend for Fig. 137:

1. By rail from mine; 120-ton track hopper; 1 @ 48-in.×11-ft. apron feeder.

2. 1 roll grizzly, 7 @ 48×1 1/2-in. rolls, 4-in. ring aperture.

3. 1 @ 36×48-in. jaw crusher, set for <4-in. ring; unreceivable oversize broken at crusher with pneumatic hammer.

4. 3 @ 1,000-ton cylindrical-steel bins, 24-in. apron feeders; belt conveyor with Merrick weightometer and automatic sampler.

5. 1 @ 4-ft. standard cone crusher, set 3/4-in.

6. 1 @ 36-in.×50-ft. bucket elevator.

7. 1 @ 4-ft. short-head cone, set 1/4-in. Water is added to the cone in variable amounts according to the quantity of clay in the feed.

8. 3 @ 6×12-ft. Marcy rod mills.

9. 3 @ 72-in. Akins classifiers with automatic density controllers.

10. Pump; distributor.

11. 3 @ 16-cell 24-in. M-S subaeration machines in parallel; *a* = cells 1 to 6, *b* = cells 7 to 16.

12. 3 Richards-Janney hydraulic classifiers to remove coarse concentrate, which floats with difficulty in cleaning and would otherwise build up in the cleaning circuit.

13. 3 @ 6-cell 24-in. M-S subaeration machines in parallel.

14. 1 @ 8-cell flotation machine.

15. 1 @ 6×100-ft. chain-drag classifier.

16. Pump.

17. 1 @ 9-cell flotation machine.

18. Thickened and fed to kiln.

19. 1 @ 40-ft. thickener.

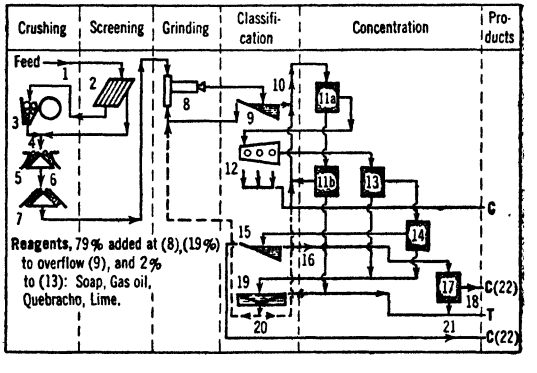

20. Alternative according to character of ore.

21. 50-ton steel bins with screw feeders at bottom; full tanks are blown 5 to 10 min. with compressed air, allowed to settle, and slimes decanted. This treatment reduces moisture from 40% to from 18% to 28%. The method of concentrate dewatering, involving items 15, 17, 18, and 21, derives from the fact that the manganese minerals settle with extraordinary rapidity and cake badly when settled, so that thickeners, pumps, etc., handling concentrates clog badly and persistently.

22. Concentrates are mixed, in varying proportions to maintain moisture constant, in a 6×6×21-ft. chain mixing drag, then fed to 1 @ 9×213-ft. oil-fired rotary kiln where it is dried and sintered. A 72-in.×88-ft. Dwight-Lloyd sintering machine is a stand-by for the kiln; this, together with 1,850-ton concentrate storage, permits continuous operation despite kiln shutdowns for relining.

FIG. 137. CUBAN-AMERICAN MANGANESE CORP.

Summary. Three-stage crushing and one-stage closed-circuit rod milling to flotation-feed size. Soap flotation; rougher-scavenger flow with 3 cleanings of rough concentrate, coarse concentrate being classified out between rougher and cleaner and between recleaner and third cleaner.

Anaconda Copper Co., manganese plant. Fig. 138 (T. M. Morris, *PC; 129 J 207*).

Location: Anaconda, Mont.
Ore: Rhodochrosite with some sulphides in silicate gangue.
Capacity: 1,000 tons per 24 hr.
Assays: Feed, 20% Mn; concentrate, 39%, <6% SiO_2; tailing 5% Mn; nodules, 60% Mn, @ 7% SiO_2.
Recovery: 86%.
Cost: $1 to 1.50 per ton of crude, estimated (*IC 6768*).

Legend for Fig. 138:

1. By 50-ton cars from Butte; bins with pan feeders.
2. Shaking screens, 2-in. round holes.
3. 1 @ 24×12-in. Blake crusher, set 4-in.
4. 2 @ 20×8-in. Blake crushers, set 1- to 1 1/2-in.
5. 2 @ 18-in. bucket elevators.
6. 2 @ 4×8-ft. Symons screens, 1/4×7-in. apertures upper three-quarters of length; 1/2×7-in. apertures for balance.
7. 1 @ 55×24-in. rolls, set 7/8-in.
8. 1 @ 55×24-in. rolls, set 3/8-in.
9. 2 @ 55×24-in. rolls, close setting.
10. Elevator; 3-way mechanical distributor; 3 @ 2-way splitters.
11. 6 rake classifiers, 2 @ 4-ft. normal-duty and 4 @ 5-ft. heavy-duty.
12. 6 @ 6×12-ft. ball mills, 2-in. balls.
13. 3 @ 50-ft. thickeners.
14. 1 @ 5×10-ft. conditioning tank.
15. 4 @ 66-in. Fagergren flotation cells.
16. 4 as (15).
17. 1 @ 5×10-ft. conditioning tank.
18. 1 as (17).
19. 1 as (17).
20. Made by saponifying acidulated cottonseed-oil foots with caustic soda and hot water.
21. 3-way nonmechanical distributor.
22. 3 @ 7-cell 66-in. Fagergren machines in parallel.
23. 3 @ 3-cell 66-in. Fagergren machines in parallel.
24. 2 @ 66-in. Fagergren cells.
25. 2 @ 8-cell 66-in. Fagergren machines in parallel.
26. 1 @ 10-cell 66-in. Fagergren machine.
27. 2 @ 50-ft. thickeners.
28. 2 @ 35-ft. slurry tanks; pump; feeder.
29. Kiln.
30. Gas and dust.
31. Multicones.
32. Elevator; bin; feeder.
33. Nodules.
34. Pan cooler, 106 ft. long.
35. Fuller cooler.
36. Elevator.
37. 8-m. screen.

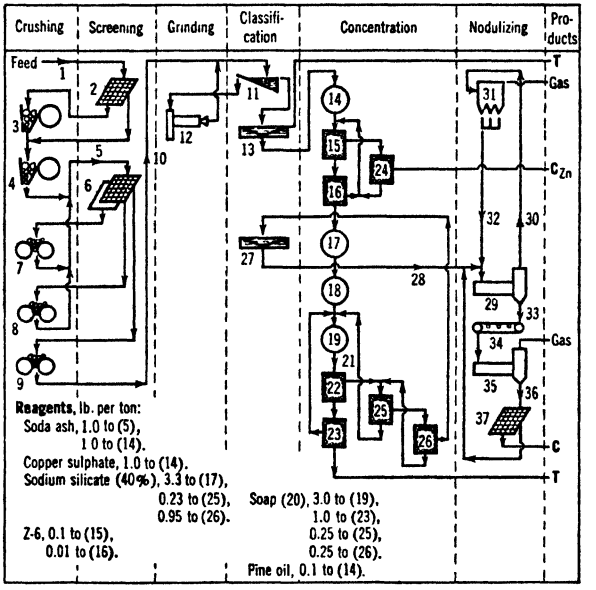

FIG. 138. ANACONDA COPPER CO., manganese plant.

Summary. Five-stage crushing to <1/4-in.; one-stage grinding to flotation-feed size. All-flotation concentration, in which sulphides are scalped out with sulphydric reagents in a simple rougher-scavenger-cleaner routing; whereupon rhodochrosite is soap-floated by one-stage roughing and scavenging and 2-stage cleaning.

Experimental. Since manganese in manganese concentrate is paid for on a sliding scale which increases with the manganese content, high concentrate grade is economically important apart from the factor of freight. Iron oxides are common contaminants. DeVaney and Coghill (*RI 2936*) report experiments comprising reducing roasting to convert the iron

oxides to magnetite, followed by low-intensity magnetic separation. Roasting alone increased the manganese assay of 3 southern concentrates about 10% of the unroasted assay (e.g., from 40% Mn to 44%), and magnetic separation produced a further lift to from 48 to 52% Mn content, the percentage increase being greater the lower the grade of the unroasted concentrate.

Tests. The U. S. Bureau of Mines tested a great variety of domestic ores by gravity concentration, magnetic separation with and without roasting, and by flotation. They report (*IC 6768; RI 3600, 3606, 3608, 3614, 3620, 3623, 3624, 3632, 3633*) on more than 100 ores and conclude that about 80% of them could be concentrated to an extent suitable for production of 80% ferromanganese, at the same time making second-grade products suitable for spiegeleisen or high-manganese pig iron. The usual method of treatment for oxide ores was washing to remove clay and other primary slimes, scrubbing if necessary, followed by jigging and/or tabling when the manganese minerals freed at suitable sizes. Fatty-acid flotation of the oxide manganese minerals, using sodium silicate as a dispersant, was usually effective. Sintering was usually practiced both because of the size requirements set by buyers and in order to raise concentrate grades. Attempts were made to improve the iron ratio by a reducing roast of concentrate followed by magnetic separation. Pyrite, when present, was removed by sulphydric collectors before flotation of manganese. The net result of the test work was to demonstrate that, under noncompetitive war-time conditions, many domestic manganese deposits can be made to yield low-grade ferromanganese stock, with low recovery, by relatively complicated and costly treatment.

32. MERCURY

Uses. The drug and chemical trades are the principal consumers. Oxides and fulminates are used in making paints and explosives respectively. Smaller amounts are used in electrical apparatus, gold (amalgamating) mills, scientific instruments (thermometers, barometers, and the like), and for mercury salts for drugs, etc. The mercury boiler may prove to be a large consumer.

Ores. Cinnabar is the principal economic mineral, but livingstonite and the native metal are also mined. The mercury minerals occur as veins, disseminations or masses of irregular form, not confined to any special type of rock, although igneous rocks are often found in the vicinity. The common gangue minerals are silica and calcite; pyrite or marcasite is usually, and bitumen often, present.

Production. World production is given in Table 104. The foreign deposits are of much higher grade than the domestic, hence competition is overwhelming. The principal domestic mines are in California and Texas.

Table 104. World production of mercury (metric tons) (*MI*)

	1913	1918	1919	1921	1929	1932	1936	1937	1938
Italy	1,004	1,038	845	1,071	1,998	1,016	1,473	2,308	2,300
Spain	1,245	567	1,226	635	2,476	816	1,497	978	1,379
United States	670	1,119	738	216	817	435	571	569	620
U.S.S.R.					130	200	*b*	*b*	*b*
Mexico	166	164	119	46	83	253	183	170	294
China	2	293	80	98	20	20	85	60	2
Others *a*	936	524	94	69	85	109	164	203	*b*
Total	4,023	3,705	3,102	2,135	5,610	2,850	4,270 *c*	4,590 *c*	5,200 *c*

a Includes Algeria, Czechoslovakia, Turkey, Austria. *c* Estimated.
b Not available.

Prices per flask of 76 lb. have been: 1929, $122.94; 1932, $58.30; 1937, $92.21; 1938. $77.11; 1942, $198.32.

Treatment. Mercury sulphides when heated to 500° to 600°C. decompose readily to yield mercury, which is in vapor form at this temperature. Because of this property, it is possible to drive off mercury vapor from mercury ores after relatively coarse crushing (<1 1/2- or 2-in.), the degree of comminution necessary depending upon the porosity of the gangue. Garbella and Thom (*Tref 10/40*) report a sizing-assay test on calcine as follows: 2~1/2-in., 0.55% Hg; 1/2~1/4-in., 0.10%; 1/4-in.~8-m., 0.05%; <8-m., 0.06%.

Experience has shown that ores carrying as little as 0.25% Hg can be roasted directly in rotary kilns more economically than by concentrating first and roasting concentrate. This is due to the fact that cinnabar is so friable that after severing it is too fine for gravity concentration, while flotation concentrate, although easy to make, dusts badly in the furnace. Friability of mercury minerals is, however, of practical benefit in beneficiation, in that substantial concentration is effected by crushing and screening. Thus SULPHUR BANK low-grade run-of-mine ore showed 1.75 lb. Hg per ton in >2-in. size, 2.20 lb. in 2~3/4-in., 4.25

lb. in $^3/_4$~$^1/_4$-in. and 11.5 lb. in <$^1/_4$-in. Since enrichment to a tenor well above 0.25% is readily effected by screening and rejecting coarse waste by hand picking, most treatment plants comprise initial rejection of waste by coarse sizing, with or without sorting of oversize; secondary sizing to 1 $^1/_2$- to 2-in., washing of the oversize to remove fines and to accentuate color, and sorting of good ore therefrom; crushing of the sorted material and furnacing of the crushed and original fines. Sorting thus may reduce the tonnage to be furnaced by 50% or more.

Cinnabar has a high specific gravity, and it is readily floatable; consequently low-grade ores in which the dissemination is too fine and uniform to permit rejection of waste by hand sorting are readily rough-concentrated, but the fine concentrate thus produced must be roasted by some more expensive method than simple passage through a rotary kiln. At SULPHUR BANK, even with crushing to 1-in. maximum, the amount of dust carried over from the kiln is so great that complicated de-dusting of the vapor must precede condensation thereof, and the dust so precipitated contains so much mercury that it must be floated and the concentrate retorted.

Exploradora de Mercurio de Huitzuco. Fig. 139 (*Tref 9/40, 10/40; A TP 896*).

Location: State of Guerrero, Mexico.
Ore: LIVINGSTONITE (mercury sulphantimonide) and cinnabar with stibnite, native sulphur, and pyrite in gypsum, limestone, dolomite, and chalcedony.
Capacity: 160 tons per 24 hr.
Assays: Feed: Hg 0.24%, Sb 0.96%; concentrate (shipped): Hg, 7 to 11%, Sb, 25 to 30%.
Recovery: About 90% Hg.
Ratio of concentration: About 40 : 1.

Legend for Fig. 139:

1. 10-in. flat grizzly; oversize waste picked out, ore sledged through.
2. 1 @ 40-ton bin.
3. 1 @ 30-in. picking belt.
4. 1 @ 3-in. grizzly.
5. 1 @ 10×20-in. jaw crusher.
6. Conveyor.
7. 1 @ 3×6-ft. Symons screen, $^3/_8$-in. aperture.
8. 1 @ 20-in. Traylor TY reduction gyratory.
9. 1 @ 18-in. belt conveyor, +17°; sampler; 300-ton bin; 18-in. belt feeder.
10. 1 @ 6×5-ft. Traylor ball mill.
11. 1 @ 4×20-ft. rake classifier.
12. Pump.
13. 1 @ 8×6-ft. conditioner.
14. 1 @ 6-cell No. 21 Denver Sub-A flotation machine; *a* = cells 3 to 6, *b* = cells 1, 2. Reagents: xanthate, pine oil, soda ash to *p*H @ 8; copper sulphate is necessary for good recovery of livingstonite.
15. 1 @ 5-ft. desliming cone.
16. 1 @ No. 6 Wilfley table.
17. Retorting at mill.
18. 1 @ 14×6-ft. thickener; 1 @ 3×4-ft. drum filter; drier; shipped.

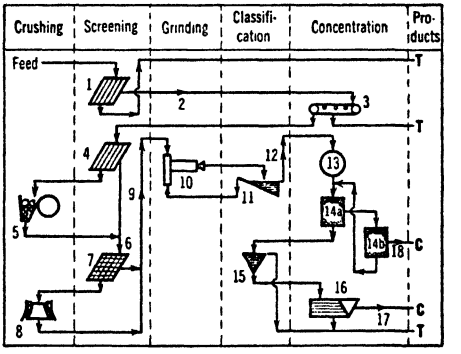

FIG. 139. EXPLORADORA DE MERCURIO DE HUITZUCO.

Summary. One-stage crushing and one-stage closed-circuit grinding to flotation size; simple rougher-cleaner flotation with tabling of sand in flotation tailing.

Sulphur Bank Syndicate. Fig. 140 (Worthen Bradley, *IC 6429*).

Location: Clearlake, Calif.
Ore: Cinnabar finely disseminated in altered basalt, with an average of 2% of elemental sulphur.
Capacity: 300 tons per 24 hr.
Assays: Feed, about 4.5 lb. Hg per ton of ore; rejected waste from hand sorting, 1.5 lb.; furnace feed, 8.3 lb.; kiln calcine, 0.4 lb.; cyclone dust, 2.5 lb.; flotation tailing, 2.0 lb.
Recovery: 85%.
Water: Pumped against 300-ft. lift from lake; 50-hp. motor; 75,000 gal. per 24 hr.
Power: 44.5 hp-hr. per ton.
Labor: Tons per man-shift, 3.4.
Costs (1930): Screening and sorting, $0.835 per ton of ore furnaced; furnace treatment, 1.709; flotation, 0.387; retorting, 0.177; condensing, 0.534; miscellaneous, 0.466; total, $4.108. Ratio of wet weight of ore mined to dry ore furnaced was 10 : 1, hence the total cost per ton mined was $0.41.

Summary. Primary rough rejection of waste as 9-in. grizzly oversize; secondary rejection by hand sorting of 9~1-in. washed crude; crude washings tabled to make high-grade for retorting and lower-grade for furnacing. All primary and all crushed undersize (except

Legend for Fig. 140:

1. 2 @ 1-cyd. shovels from open pit; 8-cyd. trucks 1/4 mile.

2. Inclined grizzly, 70-lb. rails, 9-in. spacing.

3. Bin; 2-ton skips on inclined tram; 40-ton mill bin; apron feeder.

4. 1 @ 42-in. ×8-ft. trommel, 1-in. round holes.

5. 1 @ 36-in. ×40-ft. inclined picking belt with water sprays. About 20 tons per mo. picked off.

6. 1 @ 25-ton bin.

7. Stacking belt to waste dump.

8. 1 @ 10×20-in. jaw crusher, 2-in. open setting, run intermittently when bin (6) is full.

9. Shaking screen, 1/4-in. aperture, to remove chips.

10. Deister-Overstrom table. Concentrate assays about 1,000 lb. Hg per ton and amounts to about 90 lb. Hg per mo.; tailing assays about 6 lb. Hg per ton.

11. Storage ponds for dewatering and sun drying; hand shoveling to trucks to stockpile (12).

12. 1 @ 18-in. ×340-ft. belt conveyor; 1 @ 18-in. ×38-ft. belt conveyor; 1 @ 5,000-ton stockpile; dragline; 1 @ 18-in. ×48-ft. conveyor; 1 @ 7×15-in. ×47-ft. belt-bucket elevator; 1 @ 50-ton bin; 1 @ 30-in. Challenge feeder; 1 @ 18-in. ×65-ft. belt conveyor.

13. 1 @ 3-ft. 10-in. I.D. ×60-ft. rotary kiln, slope 1/2 in. per ft.; feed rate 1.8 dry tons per hr.; fired from feed end; exit gas temperature, 625° C. Oxygen supply is regulated so that there is no unburned sulphur in the exit gas, as such sulphur tends to recombine with mercury in the condensing system.

14. A dust-precipitating system comprising, in series: 1 @ 8×10×12-ft. rectangular steel chamber with a chain curtain; 12 @ 24-in. cyclones in 2 parallel series of 6; 1 Cottrell precipitator, 5×14×25 (high)-ft. Gas temperature leaving the cyclones is about 235° C.; dust load of the gas at the end of the system is about one ton per 24 hr.

15. Brick spray tower 7×6×26 (high)-ft. with water-sealed drawoff at bottom through which a low-grade mud is drawn continuously.

16. 2 settling tanks in series.

17. 1 @ 10×10-ft. Devereaux agitator, 25 r.p.m.

18. 1 @ 2-cell Kraut flotation machine run batch; treatment of a charge continues with recirculation of tailing until the grade of the froth on panning is low enough to indicate that it is permissible to discharge tailing. Feed averages 74 lb. Hg per ton, concentrate 600 lb., tailing 2 lb. Reagents are: Na Aerofloat, 0.054 lb. per ton; pine oil, 0.309 lb.; Barrett No. 4, 0.019 lb. Pulp density is 20% solids.

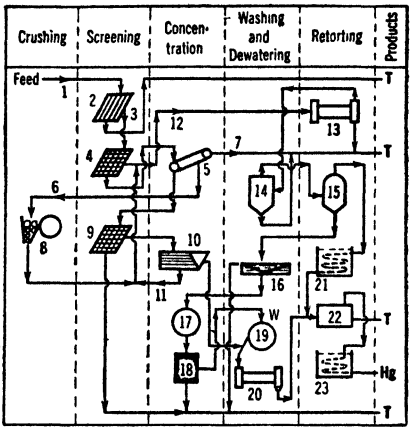

19. Batch-type vacuum filter.

20. Electrically heated batch-type drying pans; concentrate before drying is mixed with quicklime and sprinkled with water.

21. A condensing system comprising, in series: 1 vertical rectangular tank, 4×4 1/2×33 ft. with a water-cooled coil consisting of 360 @ 2 1/2-in. (O.D.) ×5-ft. pipes, inlet temp. 70° C., outlet temp. 41° C.; 1 @ 5×30-ft. and 1 @ 16×30-ft. vertical cylindrical wooden tanks in series; 1 @ 6×10×16 (high)-ft. Cottrell unit; 1 @ 20×30-ft. and 1 @ 16×30-ft. vertical cylindrical wooden tank in series; 2 @ 8 (diam.) ×16-ft. horizontal cylindrical wooden tanks in series. Provision is made for outside trickle-water cooling of the vertical tanks. By-pass arrangements permit clean-up (made monthly) without shutdown.

22. 3 standard D-type retorts (*Bul 222 USBM 144*).

23. Pipe condenser.

FIG. 140. SULPHUR BANK SYNDICATE.

the washings) furnaced in a rotary kiln; rich condensate retorted together with table concentrate (as above) and flotation concentrate made from low-grade kiln condensate.

Cloverdale Mining Co. Fig. 141 (G. H. Burr, *25 #6 MCJ 15*).

Location: Cloverdale, Calif.
Ore: Cinnabar as minute stringers and films along cracks in a highly fractured chert.
Capacity: 420 tons per 24 hr.
Assays: Feed, about 1 lb. Hg per ton; concentrate, 50% Hg.
Recovery: @ 50% in old mill by same method (*IC 6966*).
Cost: 15¢ per ton.

Summary. Screening with tumbling-scrubbing to concentrate mercury in <10-m. run-of-mine, followed by tabling and flotation of fines.

Legend for Fig. 141:

1. 3-ton trucks from open-cut mine to mill.
2. Grizzly, 6-in. apertures.
3. 500-ton bin; belt feeder.
4. 1 @ 5×5-ft. Price mill. This is a rotary scrubber with shell perforated with 3/4-in. rd. holes. Shell and lifters are manganese steel. 90% of cinnabar in feed is reduced to <10-m.
5. 24-in. conveyor.
6. Symons vibrating screen, 10-m. aperture.
7. Conveyor.
8. Rake classifier, operated for 65-m. overflow. Feed assays 4 to 5 lb. Hg per ton.
9. 320 tons out of 420 tons.
10. 2 Concenco shaking tables.
11. Thickener; diaphragm pump.
12. Conditioner.
13. Kraut flotation cells.
14. Dewatered and dried.
15. Retorted.
16. Added in small amounts to depress free S.

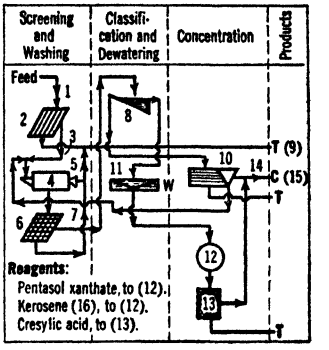

FIG. 141. CLOVERDALE MINING CO.

New Idria (*IC 6462*). Run-of-mine ore amounting to 600 t.p.d. is hand-sorted at >4-in. and at 4~1 1/2-in. with rejection of 60% as waste; all r.o.m. <1 1/2-in. plus the sorted ore crushed to this size is washed free of <60-m., the fines are floated, and the concentrate, joined to the washed ore, is furnaced in rotary kilns and condensed in a series of chambers. From 50 to 85% of the Hg produced is condensed finished in the first chamber; low-grade mud from succeeding chambers is floated, and flotation concentrate is returned to the kilns. Recovery is about 95%.

At BENEFICIADORA DE MERCURIO, San Alto, Zacatecas, Mex. (*Tref 7/42*), an ore assaying 0.67% Hg as cinnabar with a little metacinnabarite in a mixed quartz-carbonate gangue with some graphitic material is concentrated by rougher-scavenger flotation with two cleanings. Reagents are pine oil, ethyl xanthate, and AC 105. Concentrate, assaying 46.2% Hg, is retorted. Capacity is 50 t.p.d. Recovery, 95%; ratio of concentration, 72 : 1.

Small mills (*IC 6966*). At OAT HILL, near Middleton, Calif., an ore consisting of coarsely granular cinnabar in a soft gritty sandstone, assaying 3 to 5 lb. Hg per ton and not amenable to sorting, was treated at the rate of 1 t.p.h. in 1 @ 6×8-in. jaw crusher, 1 @ 16×10-in. rolls in closed circuit with a 6-m. vibrating screen, 1 Deister table which sent tailing to a desliming cone, the slimes of which were further tabled; concentrate from the tables, containing 50% Hg, was combined and retorted; recovery was about 85% and cost (1936) of milling and retorting was $1.12 per ton. At ESPERANZA MINE, near Cloverdale, ore comprising native mercury (80 parts) and cinnabar (20 parts) in soft sandstone, assaying 9 lb. Hg per ton, was milled by washing run-of-mine on a 2-deck shaking screen (3/16- and 1/16-in. holes), sorting out 50% reject from the upper screen, crushing >3/16-in. in jaw crusher and rolls and returning to the screen, discarding 3/16~1/16-in. and concentrating <1/16-in. on a long tom, bumping table, and carpet strakes in series; concentrate assaying 50% Hg was retorted; recovery was about 80%.

Hoeing pan is an iron pan about 6 ft. long, 3 ft. wide, and 4 1/2 in. deep, set on a slight incline, in which mercury mud and soot from the condensers is mixed with a little unslaked lime and hoed back and forth; the mercury is freed, coalesces, and flows down into a collecting pot under the lower end of the pan (*IC 6950*).

33. MOLYBDENUM

Uses. The principal use is in alloy steels. Those containing from 0.15 to 0.5% Mo are used extensively in automobile manufacture. Steels containing up to 3% Mo, usually containing also one or more of the following: chromium, nickel, cobalt, manganese, tungsten or vanadium, are used for permanent magnets, high-speed tools, stainless steels, etc. Molybdenum is also used as a substitute for platinum in jewelry, dental work, and gas-engine ignition. Molybdenum chemicals are used in dyeing, ceramics, and fire-proofing textiles. The pure metal is used in radio tubes, X-ray equipment, and electric-light bulbs.

Ores. The economic minerals are molybdenite, wulfenite, and molybdite. They occur as irregular masses or disseminations in crystalline rocks, frequently associated with bismuth and tungsten minerals, pyrite, pyrrhotite, and magnetite. Ores containing from 0.5% molybdenum upward may be of commercial grade.

Production. World production in 1921 was only 5.5 tons as compared with 18,000 tons in 1938. The increase is due to the development of the deposits at Climax, Colo., and to recovery of a by-product at UTAH, CHINO, MIAMI, and other copper mills. In 1938 the United States produced nearly 92% of the world output. World production is shown in Table 105.

Table 105. World production of molybdenum (short tons of Mo content) (*MI*)

	1929	1932	1934	1935	1936	1937	1938
United States	2,015	1,225	4,681	5,756	8,593	14,209.5	16,648.5
Mexico	.....	6	500	650	550	575	496
Norway	117.5	174.5	161.5	428	465	397	486
Morocco	.....	.....	65	100	117.5	107	135.5
Peru	.....	3	7	8	13.5	67.5	117
Others *a*	24	2.5	52	155	109.5	113.5	125
Total	2,106.5	1,411	5,466.5	7,092	9,848.5	15,969.5	18,008

a Includes Australia, Canada, Chosen.

Selling. See Art. 50.

Treatment. Wulfenite ores concentrate readily by gravity methods. Molybdenite does not respond to gravity concentration on account of its flaky character and ready flotation. Flotation, both from ores (CLIMAX) and from copper concentrates, is the present method of recovery.

The flowsheet of the molybdenum-recovery section at CHINO is given in Fig. 23. At MIAMI (*22 MMt 71*) bulk copper-molybdenum concentrate made in copper flotation is thickened, conditioned with lime, steamed for 2 hr. to remove the collector film from the copper minerals, filtered, and refloated with fuel oil and a frother, making a rough molybdenite froth concentrate and a copper tailing. The froth is recleaned 6 times and then leached with H_2SO_4; final concentrate assays 92% MoS_2. At UTAH (*22 MMt 71*) molybdenum flotation concentrate is graded up by roasting to oxidize the surface of the copper-sulphide particles selectively, the roasted material is floated first with a cationic collector to remove insoluble material, then with petroleum and a frother to raise molybdenite; the final tailing is enriched copper concentrate.

Climax Molybdenum Co. Fig. 142 (*Q* by E. J. Duggan, Mill Sup't; *153 A 588; A TP1675*).

Location: Climax, Colo.

Ore: Molybdenite (0.6%), pyrite (1 to 3%), chalcopyrite (0.02% Cu) in a gangue principally quartz and orthoclase with some sericites.

Capacity: 18,000 to 20,000 tons per 24 hr.

Assays: Feed; 0.6% MoS_2; concentrate, 90% MoS_2, 0.3% Cu, 0.4% Fe, 6% insol.; tailing, 0.05 to 0.07% MoS_2.

Recovery: 89%.

Ratio of concentration: 160 : 1.

Labor: American. Tons per man-shift, total, 84.

Running time: 96.5%. Repairs and ore shortage principal causes of loss.

Water: About one-third from mine, balance from reservoir. Mine water is gravity flow 1/2 mi. by pipe line; reservoir water pumped 4 mi. at consumption of 250 hp., 75% of water re-used. CONSUMPTION is 1.1 tons per ton of ore milled.

Building: Old, wood; new, steel. Floors, concrete and steel-grating. Millsite level. Heated.

Machinery handling: 12-, 15-, and 30-ton power cranes.

Power: Purchased. Comes 100 mi. at 33,000 volts. Motors, 440-volt, 60-cycle. CONSUMPTION: crushing, 2.6; grinding, 7.1; flotation, 2.4; classifying, 0.24; pumping, 0.34; water supply, 0.94; concentrate handling, 1.6; miscellaneous, 0.31; total, 15.6 hp-hr. per ton of ore.

Transportation: Narrow-gage railroad at mill. Ore comes 1/2 mi. by electric train. Concentrate shipped in barrels and sacks various distances.

Tailing: Gravity flow, 6,000 ft. of 18-in. wood-stave pipe in 3 sections as follows: 3,000 ft. at 0.3% grade, thence to a 45-ft. standpipe and 2,000 ft. on 0.1% grade, thence to a 30-ft. standpipe and 1,000 ft. level. Standpipes never run full. Head required ranges from an average gradient of 0.6% to 1.2%, depending on tonnage, particle, size and dilution. For further detail see Sec. 18, Art. 16.

Summary. Crushing from run-of-mine to <1/2-in. in 3 stages by jaw crusher, standard cone, and short-head cone, with circuit closed on the short-head by screens, but <1/2-in. material from the jaw-crusher product bled off immediately. Grinding to 28 *mog* for flotation is done in one stage with 9-ft. ball mills. All-flotation concentration, in which the primary stage scalps out a rough concentrate and discharges <28-m. tailing by a rougher-scavenger routing. Rough concentrate is reground and retreated on a rougher-scavenger flow, which discharges tailing and makes an intermediate concentrate that is reground, roughed, and scavenged to a tailing and then cleaned three times with the usual counter-flows of cleaner tailings. Cyanide, with or without lime, is added in various of the grinding and conditioning steps to depress iron and copper sulphides, and pebbles are used in the regrinding to keep out metallic iron. Approximately 99.5% of the pyrite and 95% of the chalcopyrite are finally eliminated. Recovery increases rapidly with increase in hydrocarbon up to about 0.6 lb. per ton, but a dispersing agent (ARCTIC SYNTEX M, a sulphated monoglyceride) is required for effective dispersion, particularly in cold pulps.

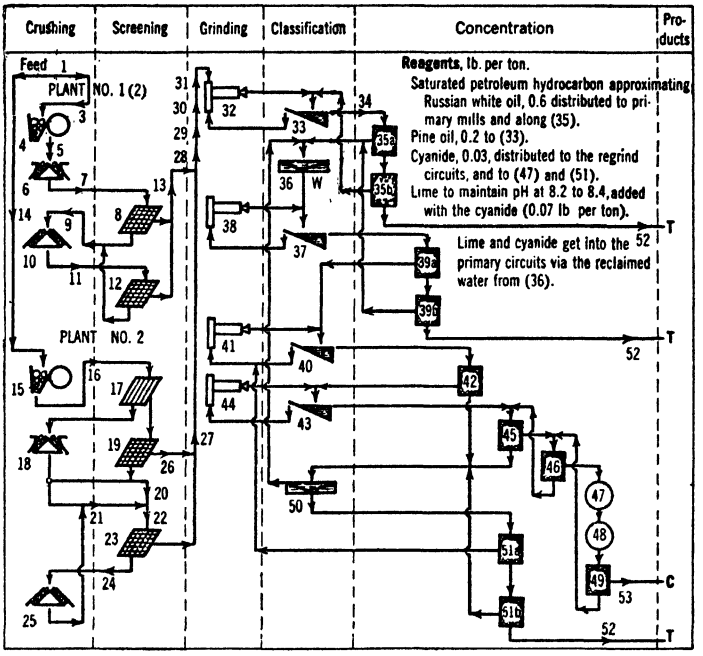

FIG. 142. CLIMAX MOLYBDENUM CO.

Legend for Fig. 142:

1. 10-ton Granby side-dump cars from mine. R.o.m. is split between two crushing plants.

2 5,000-ton capacity; old plant, used only during periods of peak capacity.

3 1 @ 500-ton bin; 1 Ross chain feeder, 15-hp. motor.

4. 1 @ 48×60-in. Buchanan jaw crusher, 9-in. open setting, 130 r.p.m., 300-hp. motor. *b*

5. 1 @ 48-in.×58-ft. pan conveyor (18 ft. horizontal, 40 ft. sloping for a 19-ft. rise), 60 f.p.m., 10-hp. motor.

6. 1 @ 7-ft. standard cone crusher, 1 1/2-in. set, 235 gyr.p.m., 300-hp. motor. *b*

7. 1 conveyor (item 7, Table 106); 1 surge bin; 4 belt feeders (item 7A, Table 106).

8. 4 @ 4×8-ft. Symons JK Rod-deck screens, 3/16-in. rod, 5/16×7-in. openings, 1,325 @ 3/8-in. s.p.m., 7 1/2-hp. motors.

9. 2 conveyors (items 9 and 9A, Table 106).

10. 2 @ 7-ft. short-head cone crushers, 1/4-in. set, 230 gyr.p.m., 300-hp. motors. *b*

11 2 conveyors in series (items 11 and 11A, Table 106).

12. 2 @ 5×8-ft. Symons JK Rod-deck screens, as (8).

13. 2 conveyors in parallel (items 13 and 13A, Table 106); 1 conveyor (item 13B, Table 106) with Merrick weightometer; 1 conveyor (item 13C, Table 106).

14. 2 @ 800-ton bins; 2 @ 6-chain Ross feeders, 3-in. chain, 15-hp. motors.

15. 2 crushers as (4) in parallel. 482 t.p.h. each. *b*

16. 2 @ 48-in.×13 1/2-ft. pan conveyors, level, 26 f.p.m., 10-hp. motors; 2 conveyors in series (items 16 and 16A, Table 106), the second with a magnetic iron detector and magnetic head pulley. The detector stops the conveyors when steel passes under it; it is much more effective than the magnetic head pulleys or overhead magnets.

17. 1 @ 6×6-ft. Robins Gyrex with grizzly cover, 1 1/4-in. spaces, 10-hp. motor.

18. 2 @ 7-ft. standard cone crushers, 1 1/2-in. set, 235 gyr.p.m., 300-hp. motors, 458 t.p.h. each. *b*

19 1 @ 6×12-ft. Gyrex screen, 1/2×3-in. aperture, 10-hp. motor.

20. 1 conveyor (item 20, Table 106).

21. From cone No. 2, 1 conveyor (item 21, Table 106).

22. 2 conveyors in series (items 22 and 22A, Table 106), the second with tripper; 1 @ 1,500-ton surge bin; 24 belt feeders (item 22B, Table 106).

23. 24 screens in parallel: 9 @ 5×10-ft. Gyrex, 5/16×4-in. aperture, 19° slope, 1,000 @ 1/4-in. s.p.m., 7 1/2-hp. motor; 2 @ 4×8-ft. Symons, as (8), 6° slope; 12 @ 4×7-ft. Jeffrey-Traylor, 5/16×1-in. aperture, 25° slope, 1/16-in. stroke; 1 @ 4×8-ft. low-head, 5/16×4 1/4-in. aperture, 1,100 @ 1/2-in. s.p.m., level, 5-hp. motor. Only the Rod-deck screens are free from blinding on wet ore.

24. 5 belt feeders (item 24, Table 106).

25. 5 @ 7-ft. short-head cones, as (10), 489 t.p.h., each, *b* including circulating load, 176 t.p.h. each new feed.

b Consumption of manganese steel liners in jaw crushers and cones totals 0.18 lb. per ton.

Legend for Fig. 142—Continued:

26. 1 conveyor (item 26, Table 106).

27. 2 conveyors in series (items 27 and 27A, Table 106), the second with a Merrick weightometer; 1 sampler, 1% cut.

28. 1 conveyor (item 28, Table 106), with tripper; 1 @ 15×53×28(high)-ft. rectangular wooden bin and 7 @ 35(diam.)×35-ft. 1,200-ton steel bins; material is 7% >3/8-in., 34% <10-m.

Table 106. Belt conveyors at Climax

Flowsheet No.	Width, in.	Length		Rise, ft.	Speed, f.p.m.	Motor, h.p.
		Ft.	In.			
7	30	126	0	40	350	40
7A	30	3	8	0	18 to 32	5
9	26	100	6	20	395	15
9A	26	85	0	25	375	15
11	30	37	6	0	505	10
11A	32	61	6	21	425	25
13	30	35	0	0	325	7 1/2
13A	24	22	11	0	206	5
13B	30	90	6	31	445	25
13C	30	98	0	34	325	25
16	54	12	10	0	125	15
16A	54	204	0	52	220	100
20	36	165	0	14	310	30
21	48	298	0	28	375	100
22	48	59	0	17 1/3	400	60
22A	48	311	0	50 1/2	430	200
22B	48	4	0	0	13	1
24	36	32	0	0	210	3
26	30	42	8	9	300	5
27	36	290	0	33	300	60
27A	36	364	0	13 2/3	300	40
28	36	352	0	9	380	50

29. Dust collection: All machines and conveyor transfer points are sufficiently enclosed to permit maintenance of a slight negative pressure; water sprays are installed at all transfer points. Fans in No. 2 crushing plant are: 1 @ 40,000-cu. ft. per min. Sturtevant Silent-vane exhauster, 1,088 r.p.m., 6 1/2-in. static pressure at 11,500-ft. alt., 50-hp. motor; 1 @ 3 7/8-in. Clarage, 34,000 cu. ft. per min., 662 r.p.m., 1 1/2-in. static pressure, 15-hp. motor; 1 Sturtevant Planovane exhauster, 12,600 cu. ft. per min., 789 r.p.m., 2 1/2-in. static pressure, 15-hp. motor; 4 @ 42-in. Sturtevant propeller wall fans, 14,500 cu. ft. per min. each, 480 r.p.m., 3/4-hp. motors for supplying fresh outside air. Fans in conveyor galleries are: 1 Sturtevant Rexvane, 2,650 cu. ft. per min., 2,462 r.p.m., 2-in. static pressure, 2-hp. motor; 2, same make, 2,970 cu. ft. per min., 2,180 r.p.m. A vacuum cleaning plant is used to clean floors and walls. All dust-laden air is passed through wet and dry Cyclones and canvas filters for dust recovery.

30. Primary concentrating plant comprises 7 substantially identical 1,850-ton sections (items 31 to 35) as follows, and one old section, similar in principle but differing in detail, used only under peak-load conditions.

31. 1 @ 36-in.×29-ft. belt feeder, 41 f.p.m.; 1 Fairbanks-Morse conveyor scale.

32. 1 @ 9×8-ft. Marcy grate-type ball mill, 20 r.p.m., 450-hp. motor, herringbone drive. Converted from 9×9-ft. overflow type with an increase of 18% in capacity to the same *mog* (28-m.). 3/4-in. grate openings (*vs.* 3/8-in.) necessary to maintain flow. 80 t.p.h. each. Effect of *mog* on capacity of primary-grinding section is shown in Fig. 143. Shiplap liners (chrome-molybdenum cast steel) substituted for rail-cement to gain diameter and reduce relining time. 2-in. gain in diameter increased capacity 5%. Relining time is 6 hr. Speeds of 17 to 22 r.p.m. (66 to 84% of critical) have been tried. Tonnage increased with speed, but not in proportion; liner wear (0.20 lb. per ton) was less at the lower speeds; ball consumption (1.1 lb. per ton) was not affected; 20 r.p.m., with grates, loads motors to capacity. 3-in. forged-steel balls with 0.2 to 0.3% Mo; this size is best of the range 2- to 4 1/2-in.; forged steel cheaper than cast balls at Climax; alloying with Mo decreased wear 15 to 20%.

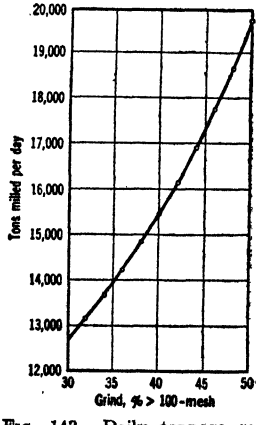

FIG. 143. Daily tonnage *vs.* fineness of grind at CLIMAX.

33. 1 @ 78-in. Akins duplex high-weir classifier, 2 1/2 r.p.m., 3 1/2 in. per ft., 15-hp. motor, 400% circulating load; overflow, 45% solids, 60% <100-m.

34. 1 revolving chip screen with spiral discharge, 18-in. aperture, 8 r.p.m.; 2 @ 6-in. Wilfley pumps.

Legend for Fig. 142—Continued:

35. 3 @ 13-cell Weinig machines in series; *a* = 1 to 6 or 10. Series arrangement *vs.* 3 parallel units increased recovery about 1%. 35 cu. ft. per min. per spindle, 1 1/2-lb. pressure; conc. 12 to 20% MoS_2, less than half of which is free.
36. 1 @ 125-ft. thickener, 10 m.p.r., 5-hp. motor, overflow to mill water supply.
37. 1 @ 8×27-ft. heavy-duty rake classifier, 10 s.p.m., and 1 @ 48-in. Akins submerged-spiral classifier, 1.5 r.p.m., 2 3/4 in. per ft., in parallel; either or both used.
38. 2 @ 5×20-ft. Marcy tube mills, 25 r.p.m., 200-hp. motors, charged with 1-in. steel balls and rejects from the 9×8-ft. mills.
39. 2 @ 24-cell 36-in. Weinig flotation machines in parallel, 300 r.p.m.; *a* = early cells.
40. 2 @ 48-in. Akins submerged-spiral classifiers, 1 1/2 r.p.m., 2 3/4-in. per ft. *a*
41. 2 @ 8×20-ft. Marcy pebble mills, 16 r.p.m., 200-hp. motors. *a*
42. 3 @ 4-cell 36-in. Weinig machines in parallel, 300 r.p.m.
43. 1 as (40). *a*
44. 1 as (41). *a*
45. 2 as (42) in parallel.
46. 2 as (45).
47. 1 @ 8-ft. Devereaux-type agitator.
48. 1 as (47).
49. 2 as (45).
50. 1 @ 35-ft. Denver tray thickener, 9.2 r.p.h.; 1 @ 35-ft. thickener, 9.2 r.p.h.
51. 1 @ 12-cell and 1 @ 8-cell 36-in. Weinig flotation machines in series; *a* = early cells.
52. 18-in. wood-stave pipe line to tailing dam; Sec. 18, Art. 16.
53. 1 @ 24- and 2 @ 20-ft. thickeners. Overflow to mill water; 3 Oliver filters; 3 Lowden driers. Product less than 5% H_2O. Product shipped in 170-lb. paper-lined burlap sacks for domestic trade and in 30-gal. oak barrels (675-lb. capacity) for foreign shipment.

a Items 40, 43, and 41, 44 comprise three parallel closed circuits available as necessary for the feeds from items 39*a* and 42. Pebbles used in preference to steel because iron (or the soluble oxidation products) in the pulp reduces floatability of molybdenite.

This flowsheet represents a double application of the principle of roughing out tailing at relatively coarse sizes from an ore that must be ground to 270 *mog* in order to make the grade of concentrate required. Only about 40% of the molybdenite is free at 28 *mog*, 60% is free at 35 *mog*, 70% at 65 *mog*, 90% at 200, and 95% at 325.

At LE MOLYBDÈNE, district of Azegour, South Marrakesch, Morocco (*135 J 58*), a crude ore containing molybdenite and chalcopyrite is floated under conditions that depress the chalcopyrite initially. From a feed containing 0.05% Cu and 1.08% MoS_2, concentrate assaying 85.2% MoS_2 and 0.02% Cu is made; tailing assay is 0.10% MoS_2 and 0.06% Cu.

34. NICKEL

Uses. The principal use is as nickel steel, which is particularly strong, tough, and easily machined. Its greatest use in the past was for armor plate and projectiles. At present the automotive and steam-engineering industries take large amounts. Nickel has been largely used for plating other metals where corrosion is to be resisted, but is now largely displaced by chromium. A new important use is in PERMALLOY, used in the manufacture of ocean cable for high-speed transmission.

Ores. The economic minerals are niccolite, millerite, nickeliferous pyrrhotite, pentlandite, garnierite. The two most important deposits of the world are at Sudbury, Ontario, Canada, and on the island of New Caledonia. At Sudbury the ore consists of enormous masses of nickeliferous pyrrhotite segregated at the bottom of a quartz-diorite intrusion, and as scattered, irregular masses in the diorite. The ore contains 1 to 6% nickel and 1 to 2% copper together with Pt, Au, and Ag. The ore in New Caledonia is garnierite. No nickel mines are worked in the United States, although some few hundred tons of the metal are produced annually as a by-product in the smelting of other ores.

Production. The Sudbury district in Ontario is principal producer. Canadian production in thousands of metric tons has been as follows: 1918, 39.8; 1919, 18.6; 1929, 50.0; 1932, 37.8; 1935, 62.8; 1936, 77.1; 1937, 102.0. World production in 1937 was estimated as 113,000 tons. New Caledonia was next largest producer with 5,800 tons in 1937. Considerable nickel comes to market as "Monel Metal," the natural CuNi alloy formed by smelting ore from the Creighton mine of the International Nickel Co.

Prices. Electrolytic nickel in United States (including duty) has been 35¢ per lb. since 1929.

Treatment. The high-grade ores are smelted directly; low-grade ores are concentrated first, using flotation with or without antecedent magnetic concentration. For reduction of metal from concentrate see *Bray; Liddell; Hayward.*

International Nickel Co. Fig. 144 (*130 J 465; 58 CMJ 665*) *a*

Location: Copper Cliff, Ontario, Canada.

Ore: Chalcopyrite, pentlandite, and pyrrhotite cementing a breccia composed principally of granite, gneiss, quartzite, and graywacke.

Capacity: 8,000 tons per 24 hr.

Assays: Feed, 3.4% Cu, 1.7% Ni; (Au, Ag, Pt), $4 (at $20 gold); copper concentrate, 25% Cu, 1% Ni; nickel-iron concentrate, not available; tailing, 0.1% Cu, 0.25% Ni.

Recovery: Cu, 95%; Ni, 85%.

Ratio of concentration: 3.3 : 1.

Water: Comes from nearby lakes; gross CONSUMPTION, 1.1 tons per ton of ore; about 1/3 new.

Power: Hydroelectric, company-generated; 2,300- and 550-volt motors. CONSUMPTION, 19.6 kw-hr. per ton.

Labor: 40 tons per man-shift.

Mill building: Level site. Steel and concrete frame; tile walls; roof of 2-in. matched board, covered with 1/2-in. wood-fiber board, tar paper and slate-surfaced asbestos felt. Steam-heated. Power cranes throughout. Dust-control system in crushing and screening plant; dust is immediately returned, wetted down, to the ore flow.

Tailing disposal: Tailing thickened in 2 @ 110-ft. thickeners and then pumped 17,000 ft. in three stages through 12-in. wood-stave pipe (crossing ridges 50 to 100 ft. above the pumps) to a tailing pond built and maintained in the usual fashion.

Summary. Four-stage crushing in two jaw crushers, standard cones and rolls from 26-in. r.o.m. to <3-m. Waste and direct-smelting nickel ore removed by magnet and hand picking at >1 1/2-in. Mill feed ground in one stage to 28 *mog*. Differential flotation to make copper and nickel-iron concentrates by successive rougher-cleaner routings with three cleanings for copper and one for nickel rough concentrates.

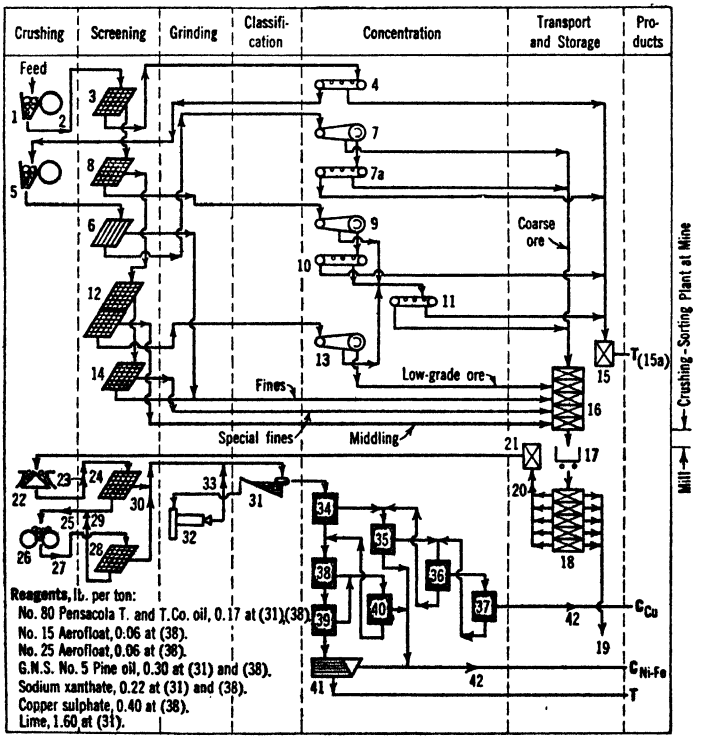

As of 1943 the No. 80 P. T. & T. Co. oil was not used. Frother (Yarmor F pine oil) was controlled to between 0.009 and 0.011 lb. per ton to (34) and 0.064 lb. per ton to (35). Butyl or amyl xanthate had replaced the Aerofloats. *p*H was held at 8.5 in (34) and 11.0 in (35).

FIG. 144. INTERNATIONAL NICKEL CO.

a The flowsheet given herein is not completely accurate as of the present, in respect either to tonnage or to the actual machines employed. It is, however, the latest available to the editor to use, and is essentially representative of present practice.

Legend for Fig. 144:

1. 30×42-in. and 36×48-in. jaw crushers set 5- and 6-in.; located at various points underground.
2. Shaft skips; head-frame pocket; rotary feeders.
3 2 @ 5×14-ft. trommels, 4 1/2- and 5 1/4-in. holes.
4. 2 @ 36-in.×90-ft. sorting belts, 35 f.p.m.
5. 2 @ 15×48-in. jaw crushers, 2 3/4-in. set.
6. 2 rail grizzlies, 3/4-in. spacing.
7. 2 pulley-type magnetic separators.
7*a*. 2 sorting belts.
8. 2 @ 4×8-ft. trommels, 2 1/2-in. holes.
9. 2 as (7).
10. 2 @ 36-in.×50-ft. sorting belts, 35 f.p.m.
11. 2 @ 36-in.×71-ft. sorting belts, 35 f.p.m.
12. 2 @ 4×8-ft. compound trommels, 1 1/2- and 7/8-in. apertures.
13. 2 as (7).
14. 4 Hum-mer screens, 0.129- and 0.190-in. apertures.
15. Sorted rock goes via bins and a conveyor to a 5 1/2-ft. standard cone set at 1 1/4-in. and thence by conveyor to a screen battery, the oversizes of which are sent over sorting belts with magnetic head pulleys from which a small amount of additional ore is scavenged. Reject is used for mine fill; screen undersize joins oversize of item (14).
15*a*. Amounts to about 25% of run-of-mine.
16. Separate bins for different products at mine.
17. Standard-gage rail haul; separate 60- and 80-ton gondola cars for different products.
18. 1 @ 10,000-ton steel receiving bin (7,000 tons live) at mill-smelter crushing plant, divided into 20 separate compartments (steam pipes, underneath to prevent freezing); 40 bottom chutes feeding to 4 traveling belt feeders; desired mixture of feeds drawn to (19) or (20). All <5-in. 10-man crews working two shifts are required for unloading; they dump a 5-car train in about 15 min. High-pyrrhotite ore cakes badly and blasting is necessary several times per year to maintain required live capacity.
19. Conveyor to smelter.

Crushing plant, capacity, 1,000 t.p.h.

20. 2 @ 36-in. belt conveyors in parallel, each with 1 @ 45-in. suspended pancake magnet. (These magnets are spaced sufficiently far from the belt to obviate removal of magnetic portions of ore.) 3 @ 36-in. belt conveyors in series; 1 @ 36-in. S-A motor-driven traveling tripper. 7 pickers per shift remove 25 to 30 tons of wood per 24 hr.; ash, of high nickel content, mixed with nickel concentrate from flotation.
21. 1 @ 1,200-ton bin; 3 steel-flight caterpillar feeders.
22. 3 @ 7-ft. standard cone crushers; set for 3/4- to 1-in. max. product; power consumption at 250 to 300 t.p.h. <5-in. feed, 120 hp. Feed rate (1937), 400 t.p.h. each. Manganese-steel bowls, 0.015 lb. per ton; lower mantles, 0.011 lb. per ton.
23. 2 @ 36-in. belt conveyors in series; 1 @ 36-in. traveling tripper; 1 @ 600-ton bin; 8 drum-type feeders.
24. 8 Traylor vibrating screens, aperture 0.16×4.31-in., about 20% undersize. Stainless-steel cloth.
25. 2 @ 36-in. inclined belt conveyors in series, with 22-in. pancake magnet; 1 @ 36-in. traveling tripper; 2 @ 450-ton bins; 2 drum-type feeders.
26. 5 @ 78×18-in. Traylor rolls (Ajo-type), set 3/16-in., 103 r.p.m., 2 @ 200-hp. motors each set. Circulating load about 200%. Feed rate 275 t.p.h. each. Forged chrome-nickel shells, 0.107 lb. per ton.
27. 2 @ 48-in. inclined belt conveyors in series; 1 @ 48-in. traveling tripper; 1 @ 1,500-ton bin; 24 drum-type feeders. Wood chips blown off belt by fishtail air jets to prevent accumulation in circuit.
28. 24 Jeffrey screens, 0.185×0.75-in. apertures; stainless steel.
29. 2 @ 48-in. inclined belt conveyors in series, with 45-in. pancake magnet; 1 @ 48-in. traveling tripper.
30. 7 belt conveyors; 2 Merrick weightometers; chain-and-bucket sampler; 36-in. traveling tripper; 14,000-ton A-bottom bin; 102 revolving feeders; 17 junction boxes.
31. 17 @ 12×28 1/2-ft. heavy-duty rake classifiers, 25 s.p.m. Feed: 1.2% >4-m., 39.2% <35-m.
32. 17 @ 6 1/2×12 1/2-ft. (inside) Marcy rod mills, 16 1/2 and 18 1/2 r.p.m., 200-hp. motors; 25 tons rods, 2 1/4-in. replacements; capacity, 500 tons per 24 hr. each.
33. 34 @ 3-in. Wilfley sand pumps, 1 active and 1 spare for each mill.
34. 30 @ 30-in.×20-ft. MacIntosh cells in 15 parallel 2-cell series, 9-in. rotors of punched sheet metal with perforated-rubber covers (0.01-in. punchings, 200 per sq. in.), 16 r.p.m., 2-hp. geared motors. Air pressure about 2 lb. Feed, 27 to 35% solids.
35. 32 as (34).
36. 32 @ 36-in.×12-ft. MacIntosh cells in parallel.
37. 32 as (36).
38. 36 as (34).
39. 8 as (35) in parallel.
40. 12 as (36).
41. 48 Deister Plat-O tables, 265 @ 15/16-in. s.p.m., 3-hp. individual motors. Installed to recover platinum as arsenide, which floats reluctantly.
42. Separate dewatering systems comprising rake classifiers sending overflow to thickeners, and thickener underflow with classifier rake products to filters; cake to bins and thence by conveyor to smelter. 80% reclaimed water. Passing thickener overflow through cascade machines to de-oil also removes some colloid.

Falconbridge Nickel Mines, Ltd. Fig. 145 (*Q* by R. C. Mott, Mill Sup't).

Location: Falconbridge, Ontario, Canada.
Ore: Nickeliferous pyrrhotite, 36.2%; chalcopyrite, 2.8; gangue: norite and chloritic greenstone, 61.
Capacity: 750 tons per 24 hr.
Assays: Feed, 1.0% Cu, 0.8% Ni; concentrate, 4.5% Cu, 3.5% Ni; tailing, 0.1% Ni.
Recovery: Cu, 95.9%; Ni, 90.1%.
Ratio of concentration: 4.7 : 1.
Labor: Canadian. Tons per man-shift: operating, 62; repairs, 250.
Running time: 97%. Repairs principal cause of loss.
Water: Lake, pumped 0.5 mi. About 5% re-used. Net CONSUMPTION, 1.75 tons per ton of ore milled.
Building: Steel-frame, brick-tile walls, Haydite roof, cement floors; slope of floor in wet part, 3/8 in. per ft. Level site. Heated.
Machinery handling: Hand crane in coarse-crushing, air-power cranes in fine-crushing and concentration sections.
Power: Hydroelectric. Motors, 550-volt, 60-cycle. 983 hp. installed, excluding crushing.
Transportation: Ore, 1/2 mi. by belt conveyors; concentrate, 300 ft. by belt conveyor to smelter. Railroad spur 3 mi. to main line.
Tailing: Pumped 400 ft. through wood-stave pipe to a natural storage basin.

Legend for Fig. 145:

1. 36×48-in. Traylor jaw crusher on 1,200-ft. level.
2. Underground pocket; skips; 1 @ 200-ton head-frame bin.
3. Vibrating grizzly feeder, 3-in.
4. 1 @ 48-in. picking belt. Waste rock (Cu, 0.32%; Ni, 0.21%), wood, and steel removed.
5. 1 @ 16-in. gyratory crusher, 3-in. open setting.
6. Belt conveyor, 400-ton surge bin, belt feeder, belt conveyor.
7. 2 @ 4×8-ft. Niagara 2-deck screens, 1 3/4- and 5/8-in. apertures.
8. 35-ton surge bins.
9. 1 @ 30×48-in. Dings pulley-type separator.
10. 1 as (9).
11 Vibrating screen, 6-m. cloth.
12. Alternatively to converter feed bins or to sintering bins.
13. This material runs 35 to 40% sulphides and will sinter alone, but is mixed with flotation concentrate (about 75% sulphides). This mixture sinters to a good cake. These fines do not respond well to the regular mill flotation treatment.
14. 2 @ 30×32-in. Dings pulley-type separators.
15. 1 @ 3×6-ft. vibrating screen, 2-in. aperture.
16. 40-ton surge bins.
17. 1 @ 4-ft. standard cone crusher, 3/4-in. closed setting.
18. 1 @ 5 1/2-ft. short-head cone crusher, 5/16-in. closed setting.
19. 1 @ 4×8-ft. 2-deck Niagara screen, 3/4- and 5/16-in. apertures.
20. 1 @ 30×48-in. Dings pulley-type separator.
21. Shuttle conveyor, 1,900-ton mill-feed bin, 24 Jeffrey-Traylor vibrating feeders, belt conveyor, shuttle conveyor, 1,100-ton ball-mill feed bin.
22. 1 @ 8-ft.×36-in. conical ball mill with Hardinge constant-weight feeder.
23. 1 @ 4×21-ft. Akins classifier.
24. 1 as (22).

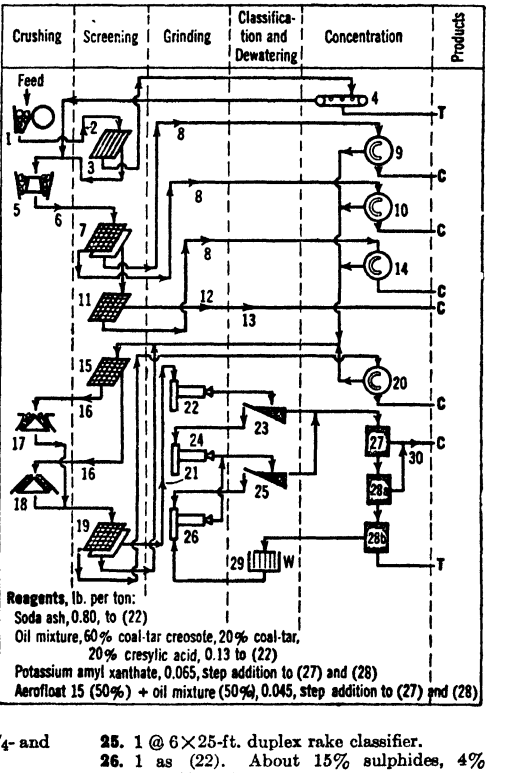

25. 1 @ 6×25-ft. duplex rake classifier.
26. 1 as (22). About 15% sulphides, 4% >65-m., 54% <200-m.
27. 2 @ 16-cell No. 24 Denver Sub-A machines in parallel.
28. 1 as (27); *a* = cells 1 to 8.
29. Genter thickener.
30. 2 @ 9-ft. 16-frame Genter thickeners; stock tank; 2 @ 6-ft. 6-disk filters; cake, 12% moisture, to sinter bins.

FIG. 145. FALCONBRIDGE NICKEL MINES

Summary. Crushing to 3-in., at which size concentration starts, in two stages, jaw and gyratory; middling further crushed to <5/16-in. ball-mill feed by a standard and a short-head cone in series, with circuit closed by a screen on the short-head. Grinding to

<48-m. flotation feed in three stages, the first two open- and the last closed-circuit. Magnetic concentration of closely sized products between 3-in. and 6-m.; flotation by a simple rougher-scavenger flow with regrind of scavenger middling.

No attempt is made to separate nickel minerals from the other metallic minerals. The endeavor is to save sulphides. Enough gangue is left in to give a good furnace charge. Blast-furnace smelting produces low-grade Cu-Ni matte, which is treated in converters and converter product is refined.

35. OSMIRIDIUM (OR IRIDOSMINE)

Uses. Principally as a hardening alloy for platinum, in same manner and for the same purposes as iridium. The alloy in its natural state is employed for fountain-pen points, for which purpose the granular Tasmanian product is preferred.

Osmiridium is a natural alloy ranging from 40 to 77% Ir and 20 to 50% Os (actual proportions given below), occurring in brittle hexagonal crystals or flattened grains. Color ranges from dark gray with bronzy sheen in the varieties highest in osmium, to brilliant tin-white in the high-Ir varieties. Sp. gr., 19 to 21; hardness, 6 to 7.

Occurrence. A frequent constituent of crude platinum, constituting 15 to 20% in the alluvial product of Colombia (where it also occurs—in the Choco district—associated with palladium and rhodium in quartz veins traversing granite, an unusual occurrence for platinum metal). Alluvial platinum from the Fifield district, N.S.W., carries 9.3% Os-Ir; that from Tulameen River, B. C., 10.5%; and that from Goodnews Bay, Alaska, up to 3.9% Os, in conjunction with 22% Ir. Osmiridium of this nature is recovered and reported as such by platinum refiners; it is possible that the two metals are not always actually and exclusively alloyed with each other. Osmiridium occurs in some of the Transvaal gold ores, more abundantly in the East Rand (and particularly in the Main Reef Leader) than in Central or West Rand.

The product, obtained by a preliminary pass over blanket or corduroy tables before cyanidation, averages quite consistently, in %: Os, 30; Ir, 26.5; Ru, 13.6; Pt, 11; Au, 2.4; Rh, 0.5; balance, undetermined. At several localities in Tasmania, alluvial gravels are worked exclusively for their osmiridium, which is found also *in situ* in serpentine rocks of the Bald Hill district, near Waratah. Analysis of the Bald Hill alluvial product: Os, 57.1; Ir, 33.8; Ru, 8.2; Pd, 0.2; Au, 0.04; Pt, 0.4%.

Production. During 5 yr. (1935–1939) U. S. platinum refiners averaged 548 troy oz. of osmiridium per year, of which 75 to 80% was extracted from imported crude platinum metals. During those same years, the Transvaal averaged 5,638 oz., and Tasmania 315 oz. osmiridium per yr.

Prices. During 3 yr. (1937–1939) osmiridium imported by U. S. (8,011 oz.) had average value of $24.56 per oz. Tasmanian output of 1939 was valued at £17 14s. per oz.

Treatment. Panning or sluicing as for gold (Art. 20); note use of blanket tables on Rand, as above. For separation and recovery of the metals, see *76 A 602*.

Osmium

Uses. Has been employed for incandescent-lamp filaments (now obsolete). No important use for the isolated metal, but see ***Osmiridium.***

Occurrence. Chiefly in the natural alloy osmiridium; also (and usually in conjunction with Ir) in crude platinum; rarely among the platinum metals associated with copper-nickel ores.

Treatment. See *76 A 602*.

36. PALLADIUM

Uses. Alloyed with gold, as a substitute for platinum in dentistry, jewelry, and some chemical wares; plating on the graduated circles of surveying and astronomical instruments; as a solder for other and more refractory platinum metals; in finely divided form (palladium black) as catalyst for nitrogen fixation and contact sulphuric acid process.

Occurrence. Frequent component (0.5 to 1.5%) of alluvial platinum; sometimes also of alluvial gold. Important constituent of some copper-nickel ores; those of Sudbury, Ont., contain nearly as much Pd as Pt; the HAUT KATANGA copper refinery, Belgian Congo, recovers 4 or 5 times more Pd than Pt Palladium partially (9.4%) replaces platinum in cooperite—$Pt(AsS)_2$—in the sulphidic ores of the Bushveld deposits, Transvaal, and is the principal constituent (70.4%) of stibiopalladinite (Pd_3Sb) occurring most abundantly in

the Potgietersrust district of the same field. It occurs also (with Pt) in the Fe-Cu-Ni sulphides of the Bushveld ores and in the platinum metal set free by outcrop oxidation. The ratio of Pd to Pt is about 10% less in oxidized than in sulphide ores of the same deposit. Of the total output by the leading producer of platinum metals in the Rustenburg district in 1939, about one-fifth was palladium. Earlier (1928) operations at Potgietersrust yielded concentrates carrying about equal parts of Pd and Pt.

Table 107. Salient statistics on palladium, troy ounces

	1936	1937	1938	1939
Production:				
Canada *a*	103,671	119,829	130,893	135,402
Belgian Congo	12,571	12,507	1,575	.....
Transvaal (sales)	4,850	5,959	6,346	8,624 *c*
United States *b*	4,682	5,945	3,653	3,491
U. S. Imports	38,842	45,427	26,858	96,829
Value per oz.	$15.20	$16.33	$16.68	$21.68
U. S. consumption:				
Chemical	124	170	402	468
Electrical	13,297	20,854	10,447	21,510
Dental	25,481	40,214	18,833	22,989
Jewelry	5,778	8,277	5,356	5,899
Miscellaneous	859	55	35	540
	45,539	69,570	35,073	51,406

a Metal other than platinum—mainly palladium; separated and refined at Acton, England, and Kristiansand, Norway.

b By refiners, mainly of gold and copper from materials of which 75 to 80% is imported.

c Estimated on basis that palladium is 18% of combined platinum-palladium production. See Table 108.

Production and consumption. See Table 107.

Prices. Palladium was quoted at average of $23.21 per troy oz. in 1937–1938, and at $23.25 in 1939; price is much more stable than that of platinum or iridium.

Treatment. Concentration from alluvial deposits, by panning, sluicing, dredging, etc., as for gold (Art. 20). In the refining of blister copper, Pd follows Pt, Au, Ag, etc., into the anode sludge, and remains with Au and Pt after electrolytic parting of Ag from the doré metal. For subsequent separation and recovery, see *76 A 602*. For treatment of the Bushveld Pt-Pd ores, see Art. 31.

37. PLATINUM

Uses for the pure metal are restricted (by its softness) mainly to chemical ware, the winding of high-temperature resistance furnaces, and such parts of jewelry as require the setting of stones. For almost all other purposes, platinum alloys with Pd, Ir, Os, Rh, Au, Ag, Cu, Ni, and several other base metals are either more serviceable or can be substituted. The alloys are used principally in jewelry and in dental structures. Platinum black, usually supported on other and more bulky material, forms an effective catalyzer in many chemical manufacturing processes. Of recent years, owing to governmental confiscation of gold, there has been considerable hoarding of platinum as a hedge against inflation.

Ores. The economic mineral is metallic platinum, usually alloyed with one or more of the elements iron, iridium, rhodium, palladium, osmium, ruthenium, copper and gold; it may comprise as little as 75% of clean Pt concentrate. It has usually been recovered from placer deposits near areas of basic igneous rocks—peridotites, pyroxenites, dunites, and serpentine. Gravels that carry platinum are usually rich in chromite and olivine. Much recent production has come from the Ni-Cu ores of the Frood mine at Sudbury and from a primary deposit in dunite in South Africa. In these deposits the platinum occurs both as sperrylite ($PtAs_2$) and as a molecular constituent of pyrrhotite or other base sulphide; cooperite—substantially Pt $(AsS)_2$ with some replacement of Pt by Pd—is a constituent of the Transvaal sulphide ores, where platinum also enters the molecular composition of base sulphides.

Production and consumption. For many years, the world supply of platinum came almost exclusively from placer workings in Russia and Colombia, with minor by-product recoveries by gold and copper refiners. Since 1934, more than one-half of the total output has been derived from the nickeliferous pyrrhotite ores of the Sudbury, Ontario, district, in which platinum is accompanied by an almost equal proportion of palladium. The platiniferous matte produced by the INTERNATIONAL NICKEL CO. is refined at Acton, England; that of FALCONBRIDGE NICKEL MINES was refined at Kristiansand, Norway. The ores of these two companies, as mined, yield eventually about 0.047 oz. Pt + Pd per ton. Since 1930, the unique deposits at Rustenburg, Lydenburg, and Potgietersrust, in the Bushveld district, Transvaal, have produced important and increasing amounts of platinum accompanied by about one-fourth its weight of palladium. At Rustenburg, ores to a stoping width of 30 in. average 0.3 oz. Pt + Pd per ton. In the United States, the only important output of alluvial platinum is produced by dredges in the Goodnews Bay district, Alaska. See Table 108.

Table 108. World production of platinum (in ounces troy) (*MI*)

	1913	1918	1919	1921	1929	1932	1936	1937	1938	1939
Canada	311 *d*	705	690	5,412	12,519	27,343	131,571	139,377	161,317	148,877
U.S.S.R. *d*	210,000	21,000	25,000	5,500	115,841	93,750	113,346	160,000 *c*	*b*	*b*
United States	1,034	9,740	10,460	2,899	6,046	2,768	14,260	15,592	45,829	42,105
South Africa	.....	.....	.....	.....	25,400	5,810	26,020	31,230	42,320	37,373 *c*
Colombia	17,635 *d*	34,266	32,236 *d*	34,000	45,576	40,477	38,333	29,315	29,460	39,070
Ethiopia	.....	.....	.....	.....	7,716	4,823	8,038	*b*	*b*	*b*
Belgian Congo	.....	.....	.....	.....	.....	96	3,185	2,570	225	*b*
Others *a*	335	461	162	189	311	1,131	634	695	.....	*b*
Total	229,315	66,172	68,558	48,000	213,049	234,365	335,387 *c*	387,000 *c*	*b*	*b*

a Includes Australia, Japan, New Zealand, Panama, Papua, Sierra Leone. *c* Estimated.
b Not available. *d* Exports.

Prices. Average prices for refined platinum were (per troy oz.): $46.84 in 1937; $33.83 in 1938; $36 in 1939.

Treatment. Alluvial platinum is recovered by sluicing or dredging, as for gold (Art. 20, 21). When it occurs with gold, platinum remains in the black-sand residues of the amalgamating devices and is recovered either by magnetic elimination of magnetite, etc., or by amalgamation with addition of an activator such as sodium amalgam. From Fe-Cu-Ni mattes, platinum is recovered by roasting, lixiviation of the soluble components, and reconcentration in a Pt-rich matte. For refining methods, see *76 A 602*.

Early methods for concentrating the oxidized ores of the Bushveld, in which platinum occurred in the free state, included stamp- and ball-milling, with special provisions for trapping metallics between stages, concentration on riffled tables, with redressing of middlings, and passing of fine tailings over corduroy tables (*29 JCM 157*). Concentrates down to 20-m. were redressed on tables and by hand and finally cleaned to 82% Pt by sulphuric and nitric acids. Fine concentrates were treated in an amalgamation barrel with addition of zinc amalgam, mercury, sulphuric acid, and copper sulphate, followed by acid treatment and retorting. By such process, ONVERWACHT PLATINUM, LTD., during 1928, milled monthly about 2,200 tons of ore averaging 6 dwt. Pt per ton, with over-all recovery of 84%. Sulphide ores yield a flotation concentrate containing 6 to 8 oz. Pt per ton, which is matted and rematted to about 25.5% Ni, 15.5% Cu, and 65 oz. Pt. After roasting, a leach with sulphuric acid leaves a residue from which, upon further smelting, a product at 60% Pt is obtained, with over-all recovery of 85%.

38. RADIUM

Uses. In therapeutics, particularly for treatment of cancer. In luminous paints, of which zinc sulphide is usually the major component. For inspection of metallic castings and welds; method is said to have some advantages over X-ray for this purpose.

Occurrence. Invariably associated with uranium, in nearly constant proportion 1 Ra to 3,400,000 U. Chief commercial source is pitchblende, an impure oxide of uranium; occurs also in carnotite (Art. 48), in the secondary minerals derived from pitchblende, and in several of the rare-earth minerals. At LUISWISHI and KASALO, Belgian Congo, pitchblende occurs in narrow, irregular veins in dolomite and shale; it is mined in open cuts and hand-sorted to a product (treated at Oolen, Belgium) which has contained up to 60% U_3O_8 and yielded 1 gm. Ra from 10 tons; in 1928, it required 30 to 40 tons of concentrate to yield 1 gm. Ra. In the historic ST. JOACHIMSTHAL mines, Czechoslovakia, pitchblende veins 6 to 20 in. wide traverse mica schist and limestone; concentrates formerly averaged 50% U and yielded 1 gm. Ra from 55 tons. In October, 1938, when absorbed by Germany, the mines were reported to have reserves containing over 300 gm. Ra; at that time, 36 to 38 tons of concentrate yielded 1 gm. Ra. Previously, Germany's only domestic source of radium was the mud collected (about 20 met. tons per yr.) from Bad Kreuzwach, carrying 1.75 mg. Ra per ton. At WILBERFORCE, Ontario, pitchblende occurs with fluorite and apatite in a pegmatite dike; a ton of ore yields concentrates containing 2.56 lb. U_3O_8, and 3,422 tons ore yield 1 gm. Ra. In the ELDORADO mines, at eastern end of Great Bear Lake, N. W. Terr., Canada, pitchblende and native silver occur in veins up to 21 in. wide, in granite; chief gangue minerals are quartz and Ca-Mg-Mn carbonates; base-metal sulphides are minor accessories (*139 #4 J 31*). In 1938, 41.5 tons mined ore made 1 ton concentrate, carrying 0.1203 gm. Ra.

Production. ST. JOACHIMSTHAL operations produced 59 gm. Ra from 1905 to 1935, and about 15 gm. (from about 560 tons of concentrated ore) in the next 3 yr.; the concession is now held by Auergesellschaft, of Berlin. Exports of concentrated uranium ores (estimated to contain 0.025 to 0.033 gm. Ra per ton) from Belgian Congo were none in 1933 and 1936, 465 tons in 1934–1935, 1,052 tons in 1937, but only 3 tons in 1938. Annual productive capacity at the Port Hope refinery of ELDORADO GOLD MINES, LTD., was increased in

1939 to 96 to 108 gm Ra; actual output: 15.54 gm. in 1936; 23.77 gm. in 1937; 67 gm. in 1938; 132 gm. (est.) in 1939. Radium contents of vanadium-uranium ores (mainly carnotite) mined in the United States is reported as 2.72 gm. in 1936; 3.14 gm. in 1937; 7.82 gm. in 1938; 8.96 gm. in 1939; actual Ra recovery not stated. During those years, such ores averaged 1.65 mg. Ra per short ton. Imports of radium salts by the United States were 38.75 gm. ($787,025) in 1938; and 78.63 gm. ($1,953,820) in 1939.

Prices. From mid-1936 to end of 1938, nominal price for radium salt of usual composition was $40 per mg.; in 1939, $27.50 per mg. for sales of 1 to 5 gm.

Treatment. For ore-dressing methods applied to the pitchblende-silver ores at Eldorado, see Art. 47; for treatment of carnotite ores, Art. 48. Of many proposed methods for the initial decomposition of pitchblende, only the following have been practiced industrially: (*a*) fusion with sodium sulphate (original Curie process); (*b*) roasting with sodium carbonate and nitrate (modified Curie); (*c*) leaching with hydrochloric acid (Cornish ores); (*d*) direct leaching with sulphuric acid (Belgian Congo ores); (*e*) oxidizing and chloridizing roasts, followed by sulphuric acid leaching (Eldorado ores). In all cases, the final concentrated product of this decomposition is a mixed barium-radium sulphate (Ba having been added en route) carrying 1 part Ra to 125,000 to 1,000,000 parts Ba. Extraction and condensation of radium from this sulphate mixture is by fractional crystallization of the chlorides or bromides (those of Ra being the less soluble), and follows the original Curie method. For the complete process for treatment of the ELDORADO concentrate see *44 CME 362*.

39. RUBIDIUM

Uses. Of the metal, in construction of photoelectric cells; of compounds, as reagents in microchemistry.

Occurrence. No mineral is definitely known in which rubidium is a major component. It occurs in minute amounts associated with lithium and caesium in a few minerals, and up to 3% in the lepidolites from some localities but is lacking in the lithia minerals amblygonite and spodumene. BOB INGERSOLL mine, Keystone, S. D., is the chief U. S. producer. Rubidium has also been extracted from carnallite.

40. SELENIUM

Uses. Photoelectric cells for purposes not demanding such instantaneous response as can be obtained from the potassium cell. Fireproofing of cotton or rubber cable insulations. Decolorizing of glass (contaminated with iron) or, in larger proportions (0.25%), for preparation of ruby glass and glazes; for these purposes sodium selenite is preferred. Vulcanizing of rubber. Improving machinability of copper and its alloys (*128 A 325*), and of stainless steels. In red to yellow pigments, with cadmium sulphide.

Occurrence. With native sulphur in some localities. Commonly with base-metal sulphide ores, present as a selenide (of which there are many) or as a molecular component of the sulphides, particularly of pyrite. Only industrial source is the fumes evolved by doré furnaces treating the anode sludge from electrolytic lead and copper refineries.

Production. In 5 yr. (1935–1939) the United States averaged 297,200 lb., and Canada (3 producers) 368,300 lb. per yr; refining of Rhodesian copper gave 4,100 lb. in 1938 and 1,300 lb. in 1939. United States imported (1935–1939) an average of 124,100 lb. annually, mainly from Canada. The potential supply exceeds the demand.

Prices. For several years prior to 1940, price of pulverized, 99 1/2% pure selenium varied but little from $1.75 per lb. It is also obtainable in cakes.

Treatment, as practiced by ONTARIO REFINING Co., Copper Cliff, Ont. (*A TP 908*). Selenium (and tellurium) is drawn from four sources: (*a*) niter slag from doré furnaces, containing sodium selenite and tellurite, both soluble in water to an alkaline solution; (*b*) "whiskers" from furnace flues, mainly selenium dioxide (55% Se) soluble in water to an acid solution; (*c*) acid solutions from scrubbers and wet Cottrell precipitators; after filtration, that from the scrubbers averages 21.8 gm. Se and 1 gm. Te per liter; that from the Cottrells averages 33.8 gm. Se and 2.4 gm. Te per liter; (*d*) cementation slime (mainly Te) precipitated (on copper sludge) from circulating leach liquors; this is roasted with NaOH and leached to an alkaline solution. These four solutions are mixed, are exactly neutralized by sulphuric acid or sodium carbonate, and are precipitated along with impurities. The selenium is precipitated in acid solution with SO_2, is filtered, washed, pulverized in a rod mill, dried, screened through 200-m., and marketed as a product assaying Se, 99.7; Te, 0.12; ash, 0.13; Cu, 0.001; Fe, 0.01%.

41. TANTALUM

Uses. Formerly in lamp filaments (now replaced by W); as a substitute for Pt when not required to resist HF, hot alkaline solutions, or high temperature in air; dental and surgical instruments; pen points; rayon spinnerets; rectifiers of alternating current; internal parts of vacuum tubes. Effect of Ta in ferrocolumbium when added to Cr-Ni steels is discussed in Art. 13. Implements fabricated from soft, malleable Ta are easily case-hardened. Metal-cutting tools composed of tantalum carbide in a matrix of Fe, Ni, or Co have some advantages over similar tools containing tungsten carbide.

Ores. Tantalite is the only commercial source of Ta; for composition and relation of this mineral to columbite (with which it is always associated) see Art. 13.

Production. Leading producer of low-Cb tantalite has been the WODGINA mine, Pilbarra field, Western Australia, where 20 to 30 tons of mineral averaging 65% Ta_2O_5, less than 10% Cb_2O_5, and notably free from Ti, Sn, and W, are recovered annually from shallow workings in soil adjacent to a pegmatite outcrop. Similar workings in the area south of Port Darwin, Nor. Terr., Australia, yield a small quantity of manganotantalite concentrates running 70% Ta_2O_5, 11% Cb_2O_5. Belgian Congo produced 122 tons of columbotantalite in 1937, 61 tons in 1938. Small yields have been recorded from Uganda and southwest Africa. United States imports of tantalum ores, short tons: 1937, 10.45; 1938, 20.85; 1939, 28.28; average value, $3,421 per short ton. Only important domestic production is from Black Hills, S. D.; output of concentrate was 8 tons in 1937, 18 tons in 1938, 340 lb. in 1939, mainly by FANSTEEL MINING CO., at Tinton. In 2 yr. of former activity (1928–1929) Tinton produced 28.5 tons of concentrate ranging from 38.7 to 57% Ta_2O_5 (*139 #11 J 39*).

Prices. Nominal prices for 60% concentrate in 1939 were $1.50 to $2.50 per lb. of contained Ta_2O_5. Average reported value for the 1937–1938 domestic output was $1,850 per short ton.

Treatment. Alluvial material, by panning, sluicing, etc., as for cassiterite (Art. 44). For lode ore, hand sorting, graded crushing of screened oversizes (tantalite being a brittle mineral), close sizing or classification, tabling of sands, and preferably separate treatment for slimes on buddles, canvas strakes, etc. High value of the concentrate justifies small-scale and carefully controlled operation. Ta and Cb are separated by a chemical process based on the differing solubilities of their double potassium fluorides. Ta metal in granular form is reduced electrolytically from fused K_2TaF_7; then sintered (in vacuo), pressed and swaged into cold-workable forms (*27 IEC 1166*).

Black Hills Tin Co. Fig. 146 (*IC 7084; 139 #11J 39*).

Location: Tinton, S. D.

Ore: Tantalite (@ 2.5 lb. Ta per ton), amblygonite, spodumene, feldspar, quartz.

Capacity: 32 t.p.d. Gyratory and cone on 1-shift basis; balance of mill on 2-shift.

Ratio of concentration: 860 : 1.

Labor: Direct mill labor: 4 men per day.

Water pumped 3/4 mi. against 500-ft. head, 30-hp. motor; 12,000 g.p.d.

Legend for Fig. 146:

1. 1-ton car about 30 ft. from headframe to sorting chute; about 50% rejected as waste by hand picking and grade thus raised from 2.5 to 5 lb. tantalum per ton; ore by 2 1/2-ton truck 1/2 mi. to mill feed chute; waste by same truck 300 ft. to dump.

2. Gyratory crusher, open setting about 1.5 in., 15-hp. motor.

3. 20-in.×40-ft. belt conveyor.

4. 5×5-ft. vibrating screen, 1-in. aperture, 1/2-hp. motor.

5. Cone crusher, 1/4-in. set, 30-hp. motor.

6. 10-ton bin; 1-ton car, 50 ft.; 25-ton bin; oscillating feeder; bucket elevator.

7. Vibrating screen, 1/2-in. aperture.

8. Small rolls.

9. Vibrating screen, 1/8-in. aperture.

10. Vibrating screen, 20-m.

11. 2 shaking tables.

12. Oil-fired drier.

13. Vibrating screen, 30-m.

14. Shaking table.

15. Drying pans. Sacked.

16. One shaking table fed with accumulated batches of material; *a* = >30-m., *b* = <30-m.

17. 2×2-ft. vibrating screen, 1/8-in. aperture.

18. Nest of 2×2-ft. vibrating screens: *a* = 20-m., *b* = 30-m., *c* = 48-m., *d* = 60-m.

19. One shaking table fed with accumulated batches of the different feeds indicated.

20. Final undersize, <60-m.

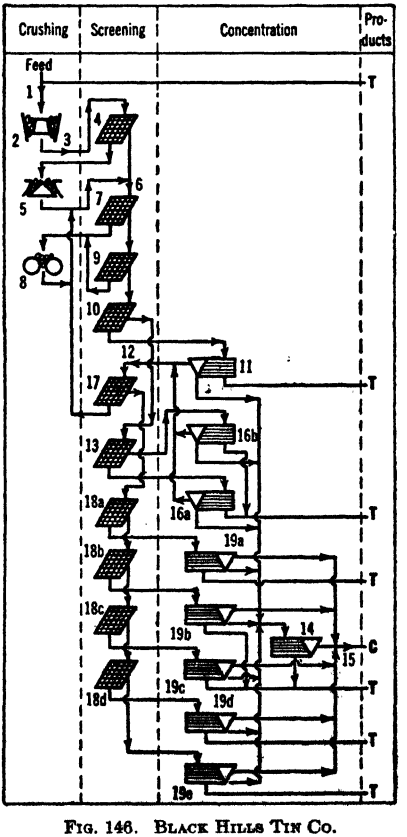

FIG. 146. BLACK HILLS TIN CO.

Power generated at mill by Diesel engines; motors, 440-, 220-, and 110-volt, 3-phase, 60-cycle.
Tailing: Settled in a series of 3-brush dams and one large earth dam about 1/2 mi. below mill.
Costs per ton of ore milled (June, 1938): Primary and secondary crushing, $0.10; rolls and primary tables, $0.192; cleaning concentrates, $0.097; pumping, $0.053; tramming from crushing plant to concentrator, $0.031; general, $0.504; total, $0.977.

Summary. Crushing from head-size to <1/8-in. in three stages (gyratory, cone, rolls), the last in closed circuit with a screen. Concentration by rough tabling at three screen sizes and table cleaning of rough concentrate at five sizes.

42. TELLURIUM

Uses: Producing blue and brown colors in glass, pink on ceramics. In diethyltelluride, as an antiknock addition to gasoline, but more expensive than tetraethyl lead. Improving machinability of copper and its alloys (*128 A 315, 325*), and substituted for sulphur in steel screw stock. In vulcanizing rubber, and as a hardening alloy for lead and tin.

Occurrence. Has been found native. Commonly as a telluride, those of Bi, Ni, Fe, Hg, Pb, and Cu being known, and, more importantly, those of Au and Ag, singly or combined. Only industrial source is the fumes from furnaces working on anode sludges from electrolytic copper refineries.

Production. In 5 yr. (1935–1939) U. S. averaged 36,550 lb., and Canada, 32,950 lb. per yr. Potential capacity greatly exceeds present demand.

Price, to 1940, was steady at $2; later at $1.75 per lb. Tellurium is available in cakes, sticks, and powder, 99% pure.

Treatment, as conducted by ONTARIO REFINING Co., Copper Cliff, Ont. (*A TP 908*). For sources of Te and its separation from Se, see Art. 40. The impure Te filtered out of exactly neutral solution (in which Se remains) is dissolved with aqueous caustic soda and the base-metal hydroxides precipitated. Neutralization of the filtered solution of sodium tellurite with sulphuric acid precipitates TeO_2 contaminated with SiO_2 and Pb. The filtered and washed cake is redissolved in NaOH, avoiding excess, lead is precipitated with Na_2S and filtered out with the silica. The purified solution precipitates pure TeO_2 upon heating to 180° F. and exactly neutralizing with sulphuric acid. The washed and dried oxide is reduced with flour and borax in a covered crucible at dull-red heat, and the metal is cast into molds; average analysis: Te, 99.75; Se, 0.04%; Pb, trace.

43. THORIUM

Uses. The important use is in the manufacture of thorium nitrate for gas mantles, which are 99% thoria. Thoria is used as an industrial catalyst. Thorium salts are all radioactive. Thorium metal is alloyed with tungsten for electric-light and electron-emissive plates and filaments, and with aluminum and magnesium to improve casting properties. Praesodymium, neodymium, and lanthanum are next after cerium (Art. 10) and thorium in order of importance, the first two for special optical glasses, the last, with erbium, in cosmetics. Mesothorium, of which minute amounts are obtainable from monazite, is used as a substitute for radium.

Ores are beach placer and dune sands in which monazite (a phosphate of the cerium metals (Ce, La, Di) containing also from <1 to 18% ThO_2 and small amounts of Sa, Er, Yb, and other rare earth elements) occurs with other heavy minerals such as zircon, rutile, garnet, ilmenite, magnetite, and tourmaline and also, of course, with quartz, feldspars, and mica. Analyses are given in Table 109.

In British India certain small areas contained up to 46% monazite, but the commercial sands mined from 1906 to 1922 (before the ilmenite market was developed) averaged only 15 to 25%. Now, however, 2 to 5% monazite is contained in sands mined principally for ilmenite content. Originally the Brazilian sands were rich enough to ship as found; now they must be concentrated. In Malaya, monazite is associated with cassiterite; in Florida with ilmenite, rutile, and zircon; in the Carolinas with ilmenite, magnetite, rutile, garnet, hornblende, and gold; and in Idaho with gold, ilmenite, and zircon. In Ceylon, monazite constitutes only 8% of the heavy sands and ilmenite 75%. Monazite is a potential by-product in all placer operations.

Production. The principal producing countries are India and Brazil. World production has ranged from 100 to 7,000 tons annually. The principal domestic deposits are in North and South Carolina.

Selling. Usual specification is a minimum rare-earth oxide content of 57 to 60%. Price is a matter of bargaining with the buyer; range of *Engineering and Mining Journal* quotations, 1936–1939, was $60 to $75 per short ton of sand of minimum analysis.

Treatment consists in rough concentration to reject the lighter sands, followed by careful separation of the heavier sands by gravity concentration, or by electrostatic or

electromagnetic methods. Sluice concentrate contains 20 to 60% monazite. When this is dried and closely sized (20-, 50-, 80-, and 100-m.) and treated carefully, first by a low-intensity, then a Wetherill high-intensity separator, the products are: low-intensity magnet, magnetite; high-intensity: first pole, ilmenite, hematite; second pole, garnet, platinum, epidote, apatite, olivine, tourmaline; third pole, monazite with small amounts of zircon, rutile, epidote, etc.; fourth pole, fine grains of monazite; nonmagnetic: gold, zircon, rutile, quartz, feldspar, etc. The gold, zircon, and rutile can be separated from the tailing by shaking tables (*TP 110 USBM*: see also *Ladoo*). Considerable chemical treatment is required to separate the various metallic compounds from the sands.

Table 109. Analyses of monazite sands (*After IC 7233*)

Item	Percentage range			
	United States	Brazil	Malaya and Australia	India and Ceylon
ThO_2	1.2 to 7.0	1.1 to 10.0	3.4 to 8.4	7.9 to 10.8
Ce_2O_3	31.4 to 37.3	31.2 to 32.4	25.5 to 33.7	26.7 to 31.9
$(La,Di)_2O_3$	25.5 *a* to 31.6	26.0 to 36.0	30.3 to 35.5	28.5 to 33.5
P_2O_5	18.4 to 29.3	25.5 to 29.3	23.7 to 27.9	24.6 to 27.7
SiO_2	0.3 to 6.4	0.6 to 10.1	0.9 to 2.2	0.9 to 2.5
ZrO_2	0.7 to 3.2	0.6 to 5.7	.....	.....
TiO_2	0.6 to 4.7	2.6	.....	.....
Fe_2O_3	0.6 to 7.8	0.6 to 4.2	0.4 to 2.8	0.8 to 1.5
Al_2O_3	0.2 to 2.5	0.1 to 0.8	0.03 to 0.8	0.1 to 0.7
CaO	0.7 to 1.2	0.1 to 1.1	0.2 to 0.9	0.1 to 0.8
H_2O	0.2	0.2 to 0.9	0.5 to 1.3	0.2 to 2.2
Miscellaneous	6.4 *b* to 7.7 *c*	1.2 *b*	.....	2.7 *d*

a Including ZrO_2, BeO, Ta_2O_5.
b Ta_2O_5.
c Includes 4.1% $(Cb, Ta)_2O_5$ and 3.6% FeO.
d U_3O_8.

44. TIN

Uses. On account of its resistance to corrosion by air, water, and weak acids, tin surfaces are widely used where such corrosive action is to be resisted. Hence tin-plate, which is sheet iron covered with a thin layer of tin, is used for roofs, kitchen utensils, and containers for canned goods. Cooking utensils made of copper are tinned to prevent the formation of poisonous copper salts. Important alloys of tin are: soft solder, an alloy of tin and lead which has a lower melting point than either the tin or lead; bronze, bell metal, and speculum metal, principally copper and tin; Britannia metal, consisting of tin and antimony, with sometimes copper and zinc; bearing metal, and pewter. Lead-tin alloys are used for foil, collapsible tubes, and the like. Tin salts are used to weight silks.

Ores. The principal economic mineral is cassiterite. Stannite is relatively rare. The largest production comes from cassiterite gravels, but primary ores in which cassiterite and sulphides, with or without tungsten minerals, occur in veins are also important.

Table 110. World production of tin (thousands of long tons) (*MI*)

	1918	1919	1921	1929	1932	1935	1936	1937	1938
Malaya *r*	29.6	38.7	36.2	69.4	28.4	46.0	66.8	77.5	43.2
Bolivia *r*	29.3	28.9	17.7	46.3	20.6	27.2	24.1	25.0	25.4
Netherlands East Indies *r*	20.4	19.5	21.3	35.0	15.4	24.7	31.7	39.8	21.0
Siam *r*	10.2 *c*	9.3	5.4 *c*	9.9	9.3	9.8	12.7	16.5	13.5
China *a*	8.7	8.3	8.3	6.5	7.7	9.7	10.5	12.9	11.2
Congo *r*	.....	.....	.....	1.0	0.7	6.5	7.3	8.9	7.3
Nigeria *r*	6.0	5.0	5.4	10.5	4.2	7.0	9.6	10.5	7.3
Burma *e*	.....	.....	.....	2.3	.....	5.6	4.8	5.8	4.0
Australia *e*	4.7	4.3	3.0	2.5	2.1	3.1	3.3	3.3	3.6
Cornwall	4.0	3.4	0.7	3.3	1.3	2.1	2.1	2.0	2.0
Japan	.....	.....	.....	0.2	.....	2.1 *a*	1.9 *a*	2.3	2.0 *e*
Argentina	.....	.....	.....	.....	.....	0.7	0.9	1.3	2.0 *e*
Indo China *r*	.....	.....	.....	.....	.....	1.4	1.4	1.5	1.6
Others *b*	1.5	1.3	1.3	3.7	6.7	2.3	2.2	2.5	2.2
Total	124.5	118.3	99.7	190.6	96.1	148.8	179.2	210.5	147.3

a Exports.
b Includes Africa, Spain and Portugal, Mexico.
c Includes India.
e Estimated.
r Countries restricting output.

Selling. See Art. 50. Ten-year average PRICES, per lb. at New York have been: 1913–1922, 48.91¢; 1923–1932, 45.43¢; 1933–1942, 48.86¢. Yearly averages at New York: 1929, 45.19¢; 1932, 22.01¢; 1937, 54.24¢; 1938, 42.26¢; 1942, 52¢.

Production. The placer deposits of the Federated Malay States and of the Netherlands East Indies (Banka and Billiton) produce about 50%, and the lode deposits of Bolivia about 20% of the world's tin. World production figures are given in Table 110.

Treatment. Cassiterite placers are mined and treated by usual placer methods, but recovery is more difficult than that of gold, and clean-up of concentrate requires a more extensive plant; also jigs are used to a much greater extent. The Bolivian vein deposits are of several different varieties and degrees of complexity. The tin mineral is invariably cassiterite. In the simple oxidized ores the accompanying minerals are principally quartz, feldspars, and iron oxides, and separation is simple. The sulphide ores, frequently occurring in the same mines below the oxidized ores, contain, in addition to cassiterite and the gangue minerals, part or all of the following: pyrite, chalcopyrite, bornite, arsenopyrite, wolframite, bismuth minerals, silver minerals, galena, and sphalerite. Many of these ores are of high grade and the cassiterite occurs in relatively coarse particles, but the complexity of the ores makes concentration difficult and the inaccessibility of the district makes changes in methods slow to be effected. In Cornwall the ores are of low grade, are more or less complex, and the cassiterite is very finely dispersed.

Placer tin. The gravels are principally of low grade, representing tailing from previous placer operations on higher-grade gravels or low-grade ground that was passed over in the earlier work. Modern dredges can operate profitably on ground containing as little as 0.4 lb. cassiterite per cyd. (*126 J 1016*). The typical flow sheet, Fig. 147, comprises dis-

Legend for Fig. 147:

1. *Hopper:* This should have at least 30° minimum slope.

2. *Spill* from bucket line. Clay tines, comprising cast-steel arms with manganese-steel tips, are mounted on a horizontal shaft and are so positioned as to be engaged by the bucket lip, whereupon the further movement of the bucket forces them to follow the curve of the bucket back and gouge out the load; they work well and are practically foolproof (Eckhart, *50 MM 208*); they reduce spill by facilitating clean dumping.

3. *Screen:* This is almost invariably a large revolving screen, 10 ft. or greater in diameter by 60 ft. or more in length, weighing upward of 45 tons. Construction is like that of the screens on gold dredges (Art. 21) except that, since the Malay tin gravels usually contain much more clay than is found in gold placers, lifters and retarding rings are more common. Maximum impact from wash water is sought, and gained by large jets and a heavy flow of water; three rows of jets are recommended in order to keep the clay lumps subject to jet action for as great a part of the time spent in the screen as possible. The first section of the screen (10 to 20 ft.) is usually surrounded by imperforate plate, and thus comprises a typical drum-type washer. Apertures are from 1/4 in. to 1 in., depending upon the size of the cassiterite grains and the amount and character of clay. Screens are, in general, greatly over capacity from a screening standpoint; the great bulk of the screening is done in the first few feet of perforate surface. Apertures are usually smaller near the head end in order to aid distribution and hold back the smaller clay balls. Retarding rings aid disintegration but lower screening efficiency by increasing bed thickness. Slope is 1 to 1 1/2 in. per ft. 75 to 100-hp. motor. Drive is as on gold dredges. Rock chute is normally sloped 1 : 4, but 1 : 3 is not enough for sticky clay, which is best handled by an independent stacker fed by chute sloping 1 : 2. Discharge lip of the rock chute should not be higher than the tailing launder, if damage to the latter in swinging is to be avoided.

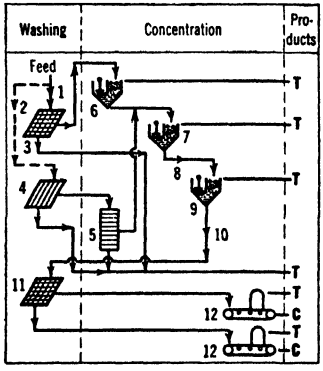

4. *Save-all grizzly,* positioned in ladder well. Aperture is 2- to 3-in. It should be so constructed that bars may be changed as readily as possible, since they are difficult of access.

5. *Save-all sluice.* This is usually made too steep for good recovery in the endeavor to prevent clogging by coarse feed. Access is difficult, hence pains should be taken to facilitate clean-ups.

6. *Rougher jigs.* Most modern tin dredges use jigs in this position, but riffled sluices are found in some of the older structures. Harz or Cooley types predominate, but recent boats use special placer types (Sec. 11, Arts. 7, 8, 11). Concentrate is made through the screen. Compartments are usually 3(wide)×4-ft., but are not stepped, rather the screen is placed on a continuous slope of 1 : 16. From 300 to 700 sq. ft. of jig screen surface is the usual allowance for roughing, depending upon digging capacity and percentage of oversize roughed out on screen (1). Eckhart (*loc. cit.*) gives 0.6 cyd. per hr. per sq. ft. of screen area as the maximum capacity for Harz types in this service. Three cells are usually sufficient, except for rich feeds. Screen, with 1/8 or 3/32×1/2-in. apertures, is woven or punched; slots usually run lengthwise. Usual speed is 110 r.p.m., but this is increased somewhat with heavy loading; stroke is varied to suit conditions. Means for ready adjustment of stroke and speed by the

FIG. 147. Typical Malayan placer-tin flowsheet.

Legend for Fig. 147—Continued:

operator to compensate for changes in feed are recommended by some designers, but such practice proved bad except in the hands of the most skillful operators.

Bed material is commonly composed of hard hematite ore (Vallentine *39 IMM 130*), sp. gr. = 5.2; cassiterite bedding (sp. gr. = 6.9) is not satisfactory. In preparing the bed lump hematite, 3/4~3/16-in., is tumbled to round off the corners; about 50 lb. per sq. ft. of screen area, making a bed about 2 1/2 in. thick, should be provided for roughing jigs. For cleaning jigs rounded material 3/8~3/16-in. should be used, the weight necessary being about 34 lb. per sq. ft.

Feed was roughly sized or classified in early jig installations, but experience has shown that dewatering sufficiently to prevent an excessive rush of cross water is all the preparation that is necessary or desirable. Ample working space and good lighting should be provided. Variable feed rate must be anticipated and if digging capacity is to exceed normal roughing capacity, it will be well to install one or two spare jigs, even though this involves a slight increase in area of boat and height of upper tumbler.

Tin sluice (if used in this position in place of jigs) is 4 to 6 ft. wide, 60 to 300 ft. long; grade, 1 in 24 to 1 in 40, depending upon the amount of water used; unriffled, but with 3×2-in. stops which are placed across the bottom at 6- to 10-ft. intervals, and increased in height to 9 or 12 in. as concentrate builds up behind them. Cleaned up by careful shoveling-over in a stream of clear water. Crude concentrate sent to shed is 10 to 50% cassiterite.

7. *Cleaner jigs.* These are usually of the same type as the roughers; they should be 4-compartment to guard against tailing loss. Screen area provided is about 10 to 20% of the roughing area. Speed, about 180 to 190 s.p.m. The concentrate of these jigs is the final product made on the boat. Cleaner tailing is recirculated on some boats.

8. *Cleaning shed* is located on dredged-over or barren ground, as centrally as possible with respect to the area to be worked over by the dredge or dredges supplying it. Equipment and flowsheet vary according to the size of the operation and the nature of the concentrate.

9. *Recleaner jig.* This may be either mechanically or hand operated; if mechanical, it is frequently of pulsator type, since cleanliness of concentrate rather than high capacity is the primary objective. If a hand jig is employed, it is usually preceded by a sluice to rough out some tailing and to make a fine finished concentrate, leaving a middling containing the coarser cassiterite for jigging. Such a sluice is 10 to 12 ft. long, 9 to 10 in. deep, converging from 3 or 5 ft. in width at the head end to about 15 in. at the discharge end; water is supplied full width at the head end over a weir board 6 to 7 in. high; in operation a fairly strong stream of water is used at first while material is hoed to wash out the bulk of the sand, then the residue is washed with a weak stream and coarse concentrate is collected at the lower end, finally the residue is washed with a heavier stream and brushed upslope, yielding fine concentrate and middling.

10. *Drying.* This problem is simple; the tonnage is small, the product is relatively fine but is slime-free (see Sec. 17).

11. *Screen battery.* These screens are used to prepare for magnetic concentration to separate magnetite, ilmenite, etc., from the cassiterite. The number of screens and the types depend upon the tonnage to be treated, the size range of the concentrate, and the difficulty of the separation.

12. *Magnetic separation.* Low-intensity machines (Sec. 13, Arts. 4, 5) will remove magnetite. The amount of high-intensity work done depends on the minerals present and the premium for high-grade concentrate.

Water. When large amounts of clay are present in the gravel, the pond water will build up in consistency until it approaches that of a thick soup, whereupon the saving of fine tin substantially ceases, and circulating pumps are subjected to excessive wear. The remedy is, of course, to bleed off a sufficient quantity from the pond to prevent such a build-up; otherwise periodic pump-outs of the pond are necessary. In any case, pump-suction lines should take from near the pond surface, as far from the digging ladder and tail-sluice discharge as possible. If, as is usually the case, the amount of organic debris is high, a large intake screen must be used, so arranged as to facilitate cleaning.

Tailing disposal. The under-water angle of repose of fine tailing may be 10° or less; hence this material will spread out over a large area on the pond bottom and may run back under the boat far enough to reach the digging ladder, correspondingly decreasing the capacity of the boat for new feed. Hence the tailing launder should be extended as far as possible, or the fines separated from the coarser tailing and pumped a sufficient distance from the boat. A slope of 1 in 16 will normally maintain a free flow (Vallentine, *loc. cit.*). Rubber liners give longer service than steel.

Lost time may be anything up to 20% and monthly output will rarely exceed 60% of theoretical capacity.

Recovery probably never exceeds 90% and is usually nearer 75% of the tin in the bank. Losses occur in the form of coarse cassiterite, granular cassiterite adhering to clay balls, both of which pass out on the stacker; granular tin adhering to smaller clay balls that pass over the rough concentrators, fine tin that remains in suspension in the cross-flow over the roughers, and in the relatively high grade tailings made in the cleaning shed.

Concentrate assay is 70 to 76.5% Sn.

Cost (1934) at 4 dredges ranged from 5.6 to 8.8¢ per cyd. (*27 CEMR 819*).

integration in a revolving-screen washer, rejection of screen oversize as tailing, rough concentration of screen undersize on sluices or jigs, making a large bulk of low-grade concentrate, preliminary cleaning of concentrate in jigs, and final cleaning on jigs or shaking tables, or, in less modern plants, on film sizers (Sec. 11, Arts. 31, 32). Gravity concentrate,

containing magnetite, is dried, sized, and subjected to magnetic concentration. In dredging, the roughing and preliminary cleaning are done on the boat, the balance of the run-up in grade is done in the CLEANING SHED on shore. In designing, the size of the treatment equipment on the boat is determined by the capacity of the digging equipment, the maximum size of the cassiterite, and the percentage of oversize gravel. Since the latter may vary from 80% average to 30% or less average as between different deposits, the necessity for careful testing preliminary to design is apparent.

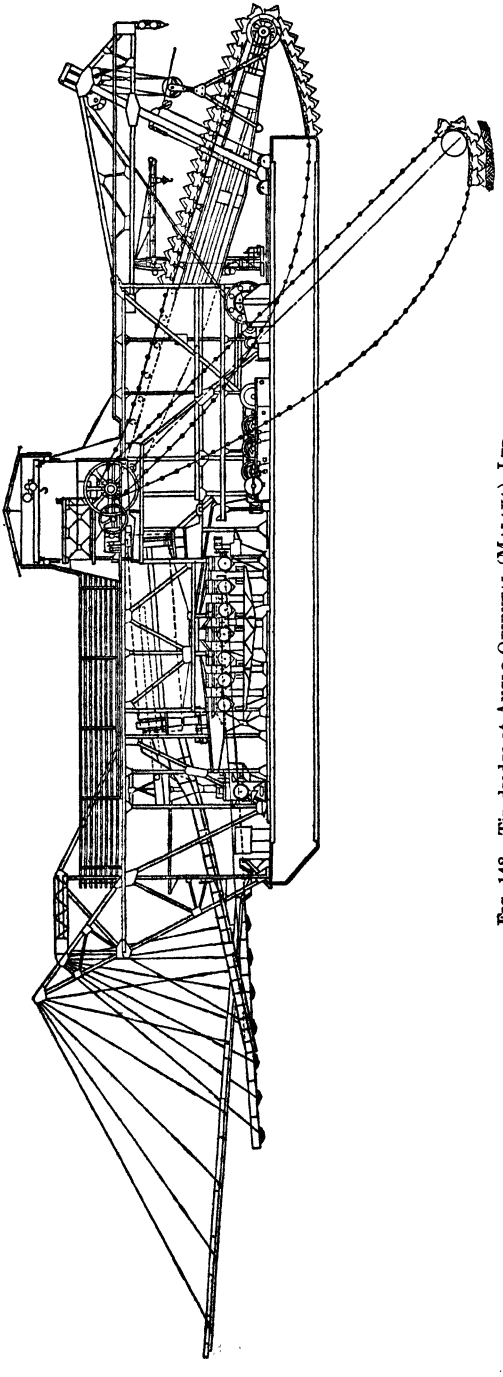

FIG. 148. Tin dredge at ANGLO ORIENTAL (MALAYA), LTD.

Anglo Oriental (Malaya), Ltd. (Q) operated five 18-cu. ft. dredges in the Kuala Lumpur district. These dredges had two parallel screens in the same housing stepped down in diameter from 8 1/4 to 7 3/4 ft. (in lieu of retarding rings), the length of perforated section being 35 ft. Apertures increased from 3/8-in. to 1/2-in. along the run; speed, 8 r.p.m.; water pressure on monitor jets, 30 lb. per sq. in. There were 10 @ 4-compartment Ruoss roughing jigs (Sec. 11, Art. 7) each side, rough concentrates going to 3 @ 4-compartment Ruoss cleaner jigs, making concentrate tailing, and a middling from the last three compartments, which was dewatered on the boat in a cone and then recleaned in a 4-compartment Ruoss jig; this made concentrate a middling from the last two compartments which circulated on the jig, and a final tailing. Boat concentrate assayed 10 to 30% Sn and was run up to 75% Sn in the shore plant. Feed ranged from 0.4 to 0.8 lb. SnO_2 per cyd. Average monthly throughput per dredge was 400,000 cyd. A typical side assembly is shown in Fig. 148.

Reuong Tin Dredging Co., Ltd. (*33 CEMR 10*), at Kuala Lumpur, Fed. Malay States, working in very clayey ground, sends the oversize of the primary screen to a second revolving washing screen with 5×4-in. slots, oversize to waste; undersize to 2 heavy-duty log washers, log product to waste; log overflow to a vibrating screen which rejects oversize, tailing being returned to the primary screen. Primary-screen undersize is jigged in the usual fashion.

Hydraulicking with hydraulic elevators is done when conditions are favorable. At GAPENG CONSOLIDATED, Malaya (*126 J 1016*), sluices 350 ft. long, sloping 1 in 50, lose about 7% of the cassiterite fed; about 7/8 of this is recovered by Chinese tributers.

Cocks Eldorado dredge. Fig. 149 (*29 CEMR 186*).

Location: Eldorado, Victoria, Australia.
Ore: Gravel containing clean, readily amalgamable gold and cassiterite.
Capacity: 10,000 tons per 24 hr.
Assays: Concentrate, 71% Sn.
Recovery: Sn, 95%; Au, 99%.

Legend for Fig. 149:

1. Revolving screen, 3/8-in. aperture.

2. 10 primary jigs.

3. 2 @ 4-cell secondary jigs. Analyses: hutch 1, 473 dwt. Au, 28.3% Sn; hutch 2, 1.9 dwt. Au, 2.1% Sn; hutch 3, 2.9 dwt. Au, 2.0% Sn; hutch 4, 0.2 dwt. Au, 0.3% Sn; tailing, 0.01 dwt. Au, trace Sn. Hutches 1 and 2, amounting to about 2 t.p.d. and representing 1/5,000 of the feed, are combined into a product assaying 5 to 10 oz. Au and 5 to 10% Sn. The gold is clean, amalgamates readily, and is mostly 65~100-m.; the cassiterite and ilmenite are about 28~100-m.; quartz and tourmaline are somewhat coarser; topaz, sapphire, corundum, and zircon are mostly 100~150-m.

3a. Hutches 3, 4.

4. To shore plant.

5. 1 @ 2-cell Harz jig, 36×15-in. with 30× 28-m. screen, BB-shot bedding, 200 @ 3/16-in. s.p.m.; tailing comprises quartz, tourmaline, and some of the gems.

6. 3(diam.)×5-ft. amalgamating barrel, 15 r.p.m.; charge about 1 ton of concentrate in pulp containing 30% solids, with 20 to 30 oz. Hg; ground 2 hr.

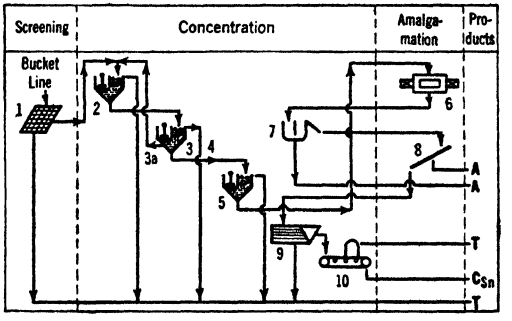

7. Mercury trap.

8. 1 @ 2×6-ft. amalgamating plate, slope 2 in. per ft.

9. 1 @ No. 11D Wilfley table, 6×15-ft. deck, with riffles modified to handle large concentrate and small tailing tonnages; gem crystals are mostly flat and difficult to wash away from the generally rounded cassiterite. Tailing, 0.5% Sn.

10. 1 @ 30-in. (disk) Rapid magnetic separator, 2 @ 6-in. belts; capacity, 2 1/2 to 3 tons per 8 hr.; 3-kw. 110-volt motor-generator set used to energize. Tailing is re-run until <0.35% Sn.

FIG. 149. COCKS ELDORADO DREDGE.

Lode Ores

Primary tin ores almost invariably have cassiterite as the principal tin mineral, but it is a rare case in which cassiterite is the only heavy mineral present. Usually sulphides, principally iron, are present; tungsten in more or less important amounts is a frequent associate; arsenic minerals are not infrequent; and gold and silver in economic quantities occur in some ores. Since cassiterite is not, so far as present (1941) knowledge goes, economically floatable, but has a high specific gravity, concentration is effected by gravity means; and since, further, the value of tin per unit in concentrate is high, and increases markedly with increase in grade of concentrate, and the habit of cassiterite leans toward fine dissemination, the mill chase for pure tin mineral goes to great lengths. Tailing is dressed, scavenged, and rescavenged several times, and concentrate is cleaned, recleaned and re-recleaned. Furthermore, since the most efficient operation of gravity concentrating machines requires sizing or sorting as preparatory operations, and since each such preparatory operation and each gravity treatment adds considerable water, which must usually be removed before subsequent treatment, the screening, classification, and dewatering sections of the tin-mill flowsheets are often more extensive even than the concentration sections.

Gravity concentrate usually contains many heavy impurities. Magnetite is removed by low-intensity magnets, and iron-bearing tungsten minerals, garnet, and epidote by high-intensity magnets; sulphides may be reduced to a relatively low figure by flotation; an alternative treatment for pyrite is a magnetizing roast followed by magnetic separation, which may be supplemented by gravity concentration to remove nonmagnetic iron oxides rendered porous in the roasting; sulphuric acid leaching has also been practiced for removal of such iron. Final removal of sulphur and arsenic is effected by dead roasting. Volatilization of tin from tin-pyrite concentrate has been experimented with.

Treatment of a simple cassiterite-gangue ore is typified by Chinese (KOTCHIU) practice; the PATIÑO and COLQUIRI mills are treating sulphide-bearing ores low in silver; the POTOSI mill receives both sulphide and oxidized ores; the sulphide ore treated in the ORURO mill is high in silver; the SAN ANTONIO ore contains argentiferous oxidized lead minerals; the

BEATRICE ore contains arsenic; the MAWCHI mill illustrates the making of a collective tin-tungsten concentrate, which is separated later by dry high-intensity magnetic treatment.

Recoveries (1939) at the Bolivian lode-ore mills are reported (*21 MMt 386*) as 80.79% on 3.66% ore at PATIÑO, 68% on 2.64% ore at OPLOCA, 68% on 2.38% ore at BOLIVIAN TIN & TUNGSTEN, and 68% on 2.88% ore at ARACA.

Chinese tin milling (after Draper, *12 MMt 178, 242*). The important deposits are in the Kotchiu district, in southern Yunnan, near the Burma, Siam, Indo-China borders. The principal ores are cassiterite, finely disseminated in a soft clayey mixture of limonite and porous hematite, which is probably an oxidized residue of a replacement deposit in limestone. Copper, as malachite, runs 1 to 2%. There are also small amounts of Pb, Zn, and As in oxidized form. Tin content averages above 5%. Most of the ore is milled by hand; the process starts by spreading the ore in a layer a few inches thick on a tamped clay floor, and pounding and crushing it with flails. The small amount resisting such disintegration is separated out and broken by foot stamps, or by Chilean mills with ±9-ft. granite wheels having 6×6-in. cast-iron tires wedged on, running on a stone or cast-iron race, 20 ft. in diameter, and driven by a water buffalo. Crushed material is concentrated on planillas (Sec. 11, Art. 32) about 5 × 6 ft. The first planilla, which yields a rough concentrate assaying 50 to 55% Sn is sloped about 20°, and worked with much water. Tailing is scavenged on flatter slopes and concentrate is cleaned and recleaned many times at successively steeper slopes and with progressively smaller amounts of water until at the final stage the slope is about 45° and the water a mere trickle. Grade of concentrate is customarily about 68.5% Sn. Recovery averages about 70% and ratio of concentration is 12 or 15 to 1. Cost of concentration (excluding crushing) is $1 to $2 per ton (1931). The one mechanized treatment plant in the district is diagrammed in Fig. 150.

Yunnan Kotchiu Tin Trading Co. Fig. 150 (*12 MMt 242*).

Location, Kotchiu, Yunnan, China.
Ore: Cassiterite in clayey limonite and hematite.
Capacity: 300 tons per 24 hr.

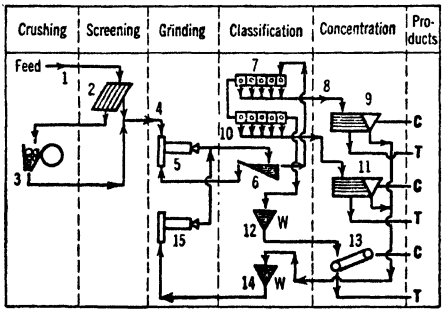

Legend for Fig. 150:

1. 100-ton masonry bin; hand tramming to top floor of mill.
2. 1 @ 6×10-ft. grizzly, 1 1/2-in. aperture.
3. 1 @ 12-in. jaw crusher, set 1-in.
4. 50-ton bin, reciprocating feeder.
5. 1 @ 5×8-ft. Marcy rod mill.
6. Dorr classifier.
7. Launder classifier, Deister cone-baffle sorting columns.
8. Separately.
9. 8 Wilfley tables.
10. Launder classifier.
11. 20 Deister Plat-O, 6 Wilfley, 4 Ferraris tables.
12. 4 V-bottom thickening tanks.
13. 12 twin-belt vanners, 4 Ferraris tables.
14. Thickening cones.
15. 2 Krupp ball mills; 1 tube-pebble mill.

FIG. 150. YUNNAN KOTCHIU TIN TRADING CO.

Patiño M. and E. Consolidated, Inc. Fig. 151 (*138 J 299*).

Location: Catavi, Bolivia, S. A.
Ore: Cassiterite and pyrite in a siliceous gangue.
Capacity: 2,200 tons per 24 hr.
Assays: Mill feed (after sorting; see item (10) of flowsheet), 3.8% Sn; concentrates: gravity, 45.69% Sn; after flotation, 64.68% Sn, 0.20 Bi, 3.96 Fe, 0.05 Cu, 0.15 Pb, 0.17 Zn, 1.72 S, 0.09 As, 0.56 WO_3, 2.42 Al_2O_3, 5.8 SiO_2, 1.12 TiO_2, 0.09 P; tailings: sand, 0.43% Sn; slime, 0.90% Sn; combined sand and slime, 0.70% Sn; flotation froth, 0.85% Sn.
Recovery: Jigs, 18.5%; sand tables, 54.8%; slime tables, 7.8%; buddles, 0.6%; total, 81.6%. Of this total, flotation recovers 99.44%, making an over-all recovery of 81.2%.
Ratio of concentration: 20.6 : 1.
Power: 27 hp-hr. per ton milled.
Tailing disposal: Sand tailing dewatered in 4 large Esperanza drag classifiers which discharge onto a 16-in. conveyor discharging into a 500-ton loading bin for an aerial tram which, in turn, stacks it automatically along a dam line 1.2 mi. long. Slime tailing is thickened in 1 @ 120-ft. and 1 @ 75-ft. Dorr thickener and pumped by an 8-in. Wilfley pump behind the sand-tailing dam.
Costs (1935): Labor, $0.40; supplies, 0.50; power, 0.45; total, $1.35 (U. S.), excluding items preceding (14) on the flowsheet.

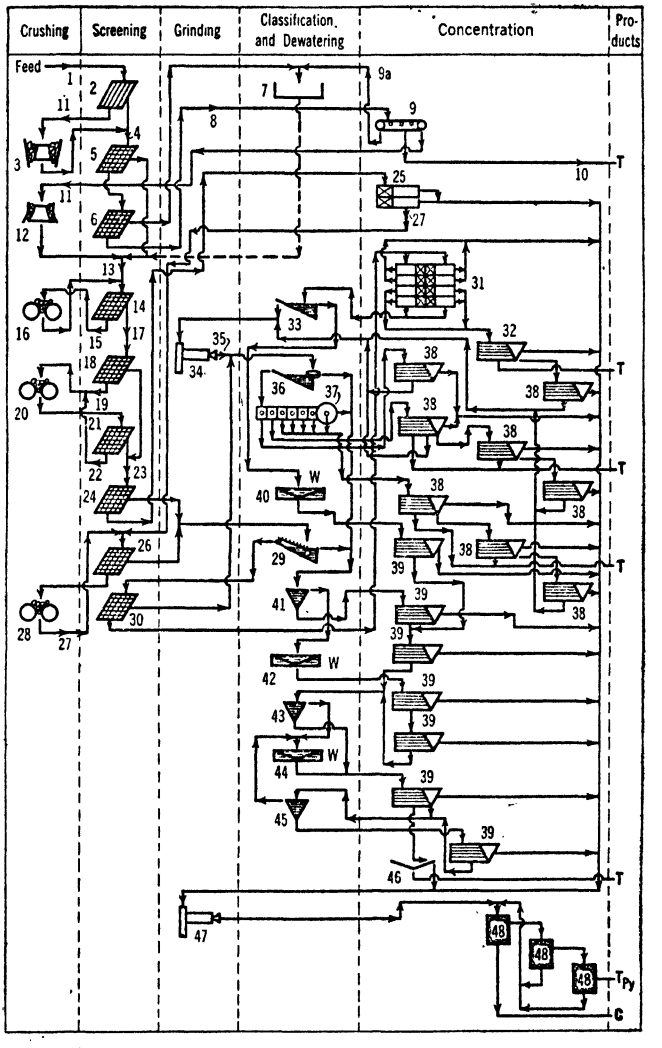

Legend for Fig. 151:

1. 2-ton cars from mine; 1 @ 650-ton concrete bin; chute feeders; 30-in. belt conveyor.

2. 2 bar grizzlies, 3-in. spacing.

3. 2 @ 13-in. McCully gyratories.

4. 1 @ 24-in. conveyor.

5. 2 @ 4×8-ft. trommels, 1 1/2×3-in. slotted plate.

6. 2 Leahy vibrating screens with washing sprays.

7. Settling tanks. Contents dried and sent to mill at irregular intervals.

8. 1 @ 24-in. conveyor; 1 @ 900-ton bin; 4 @ 36-in. apron feeders.

9. 2 @ 30-in. inclined picking belts in parallel, 30 f.p.m. Ore is washed as it feeds onto belt. Space provided for 104 pickers (women).

9a. Washings.

10. 12 to 20% of r.o.m., assaying 0.5 to 0.9% Sn; 16-in. conveyor with weightometer; movable spreader-conveyor on waste dump.

11. Magnetic protection.

12. 2 @ No. 6 Traylor reduction gyratories, set 1 1/2-in.

13. 1 @ 20-in. conveyor; 1 @ 18-in. shuttle conveyor; 1 @ 3,200-ton concrete bin; 30-ton railroad cars 2 mi.; track scales both ends of haul; 1 @ 2,500-ton mill bin; 8 feeders; 2 @ 30-in. inclined conveyors.

14. 4 @ 4×10-ft. trommels, 16-mm. screen.

15. 1 @ 24-in. inclined conveyor.

16. 2 @ 57×20-in. Traylor rolls.

17. 1 @ 24-in. conveyor.

18. 2 @ 6-mm Leahy screens.

FIG. 151. PATIÑO M. & E. CONSOLIDATED.

Legend for Fig. 151—Continued:

19. 1 @ 20-in. conveyor.
20. 2 @ 42×16-in. A-C rolls; 1 @ 55×20-in. Traylor rolls.
21. 2 @ 6-mm. Leahy screens.
22. 1 as (19).
23. Conveyor with automatic tripper; 3,000-ton bin; 5 apron feeders; 2 belt conveyors; 1 @ 20-in. inclined conveyor with weightometer; Sullivan disk sampler; splitter; 2 @ 16-in. conveyors.
24. 8 Leahy screens, 3-mm. Ton-cap; with spray water.
25. 6 @ 2-compartment cup-discharge jigs.
26. As (24).
27. Bucket elevator.
28. 3 @ 42×16-in. A-C rolls.
29. 2 drag classifiers.
30. 8 Leahy screens, 1-mm. aperture.
31. 6 double 4-compartment hutch-discharge jigs.
32. Shaking tables to remove silica.
33. 3 @ 6-ft. duplex and 9 @ 8-ft. simplex rake classifiers.
34. 4 @ 5×10-ft., 3 @ 4×10-ft. A-C rod mills, and 1 @ 6×6-ft. ball mill.
35. 4 @ 4-in. Wilfley pumps.
36. 2 @ 16-ft. bowl-rake classifiers, 200-m. overflow.
37. 8 @ 7-spigot Fahrenwald classifiers.
38. 45 Deister Plat-O tables, used for >80-m. sands.
39. 55 Deister-Overstrom tables, used for <80-m. feeds.
40. 2 @ 20-ft. thickeners.
41. 11 @ 8-ft. Fahrenwald cones.
42. 2 @ 20-ft. and 2 @ 30-ft. thickeners.
43. 21 @ 6-ft. Fahrenwald cones.
44. 2 @ 30-ft. thickeners.
45. 3 as (41).
46. 13 center-discharge buddles.
47. 1 @ 5×10-ft. rod mill.
48. 8 MacIntosh flotation cells.

Summary. Crushing to 3-mm. in 5 stages; rejecting tailing at 3~1 1/2-in. by hand picking; treating sized products on jigs down to 1-mm. and finer sizes, extensively classified, on tables; all gravity concentrate cleaned by flotation to remove sulphides, principally pyrite.

This flowsheet is typical of the treatment of Bolivian ores in which the values are substantially all tin.

Compañía de Minas de Colquiri. Fig. 152 (*Q; 2 #4 FMQ 12*).

Location: Colquiri, Bolivia, S. A.
Ore: Cassiterite and sulphides (principally pyrite) in quartz veins in slate.
Capacity: 700 tons per 24 hr.
Assays: Feed: Sn, 3.00%; soluble Sn, 0.16; Pb, 0.93; Zn, 1.90; Cu, 0.52; Fe, 20.6, S, 11.6; Ag, 0.12 oz., SiO_2, 26; Al_2O_3, 22.2; Sb, 0.5; concentrates: High-grade, 64% Sn; low-grade, 45% Sn. (See also Table 111.) Tailing, see Table 111.

Table 111. Sizing tests and assays at Colquiri

Material	Feed to fine-ore bins			Quartz tailing		Combined unit cell and primary-flotation sulphide		Secondary flotation pyrite		High-grade barrilla	Assay	
Screen mesh	Weight, %	Assays, % Sn	Assays, % S	Weight, %	Assay, % Sn.	Weight, %	Assay, % Sn.	Weight, %	Assay, % Sn.	Weight, %	Per cent. Sn.	Per cent. S
1-in.	20.7	3.5	18.8	.....	.....	.....	.....	.....	.....	.....	.....	.....
1/2	15.2	3.7	13.5	.....	.....	.....	.....	.....	.....	.....	.....	.....
3/8	6.8	3.0	14.8	.....	.....	.....	.....	.....	.....	.....	.....	.....
3	6.7	2.6	12.3	9.4	0.5	.....	.....	.....	.....	.....	.....	.....
4	6.0	3.2	11.4	8.1	0.4	.....	.....	.....	.....	.....	.....	.....
6	4.5	3.5	12.2	6.2	0.5	.....	.....	.....	.....	.....	.....	.....
8	4.1	2.7	11.9	3.6	0.6	.....	.....	.....	.....	.....	.....	.....
10	4.2	3.5	11.4	1.9	0.8	.....	.....	.....	.....	.....	.....	.....
14	2.6	4.0	9.8	1.4	1.2	.....	.....	.....	.....	.....	.....	.....
20	3.4	4.4	9.7	2.3	1.0	.....	.....	.....	.....	.....	.....	.....
28	2.6	5.5	9.1	3.5	0.8	.....	.....	.....	.....	0.7	15.2	33.3
35	2.4	7.2	9.5	8.1	0.8	.....	.....	0.4	0.9	1.8	35.0	18.1
48	1.6	6.5	8.7	9.2	1.1	2.7	0.7	4.0	0.4	3.0	61.8	4.3
65	1.8	7.0	8.3	6.2	1.0	6.5	0.7	11.6	0.9	8.6	65.2	1.6
100	0.6	6.0	7.8	12.4	0.8	11.0	0.8	11.0	1.2	8.8	65.2	0.7
200	2.6	5.0	7.0	12.6	0.6	30.4	0.9	31.8	2.0	35.1	58.1	0.5
325	1.8	2.4	4.5	5.9	0.9	.....	.....	.....	.....	.....	.....	.....
<Last..	12.4	0.8	0.9	9.2	2.1	49.4	1.6	41.2	1.4	42.0	56.1	0.3
Totals..	100.0	3.4	11.7	100.0	0.9	100.0	1.2	100.0	1.5	100.0	57.8	1.2

Recovery: 78%.
Ratio of concentration: 28.6 : 1.
Running time: 90% of possible; lost time due to repairs and holidays.
Power: Hydroelectric; comes 25 mi. at 22,000 volts; motors, 440-volt, 50-cycle; CONSUMPTION, 34.6 hp. per ton milled.
Labor: Native labor with American shift bosses; tons per man-shift: operating, 1.6; repairs, 11.8.

Water: Comes 6,900 ft. from a creek by 2 @ 6 1/2×9-in. Aldrich Triplex pumps in series, 480 r.p.m. against a static head of 594 ft. (total head, 690 ft.), 200-hp. for pumping; water CONSUMPTION, 20 tons per ton milled, of which upward of 90% is recirculated.

Mill building: Wood frame with corrugated-iron sheathing; sloping site; floors concrete, slope 1/2 in. per ft. in wet section. Unheated.

Machinery handling: Chain hoists on rails in crushing and flotation sections, by hand in table section.

Tailing disposal: Wilfley pumps elevated to main tailing launder. Pyrite elevated in 3 stages by 2-in. Wilfley pumps.

Distances: Mine to mill, 0.6 mi. by electric tram; concentrate (1% moisture) 40 mi. by highway to railroad, thence by train and boat to Liverpool, England, or to U. S.

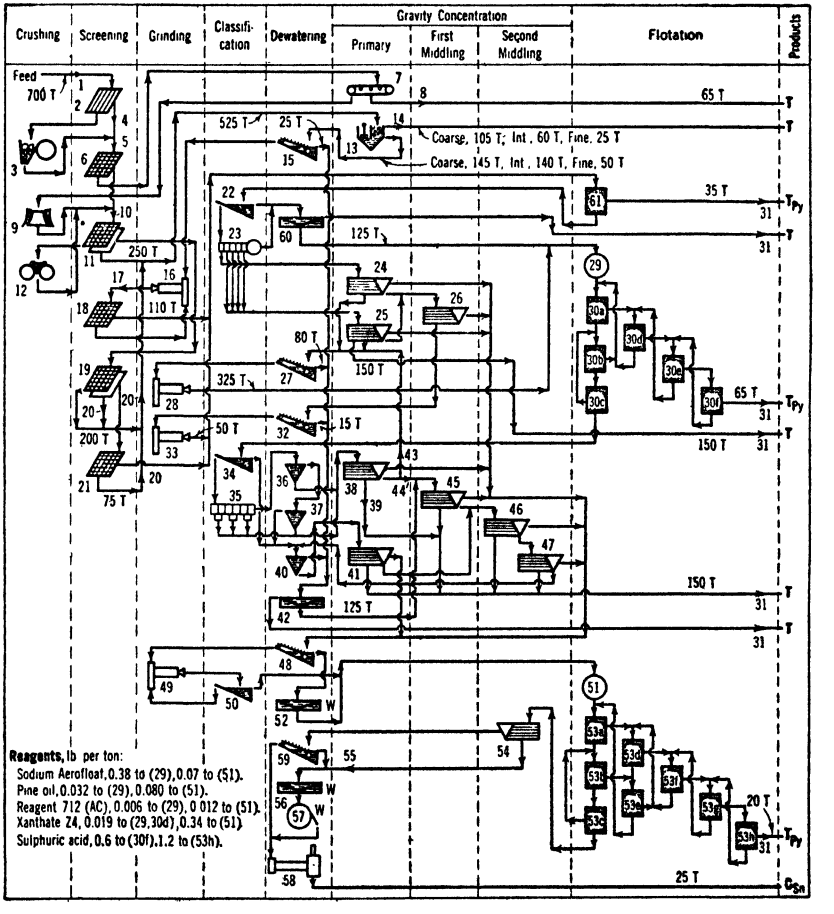

Legend for Fig. 152:

1. 2-ton cars, electric-locomotive; track scales, 10-ton × 1-kg.; 30-ton surge bin.
2. Grizzly, 2-in. spacing.
3. 1 @ 15×30-in. jaw crusher, 2-in. set.
4. Surge bin; 1 variable-speed apron feeder.
5. 1 @ 16-in.×38-ft. conveyor, 15° incline, 200 f.p.m., 5-hp. motor; 1 @ 16-in.×121-ft. conveyor, 90 ft. at 15° incline, 31 ft. horisontal, 200 f.p.m., 7 1/2-hp. motor; stationary tripper to No. 1 ore bin; 2 @ 29 (diam.)×15 1/2-ft. circular wood-stave bins, capacity, @ 500-tons ea.; 2 variable-speed apron feeders; 1 @ 16×110-ft. conveyor, 10° incline, 100 f.p.m., 7 1/2-hp. motor; 1 @ 16-in. Dings suspended magnet and 1 @ 20-in. magnetic head pulley. See Table 111 for sizing tests and assays.
6. 1 @ 2×6-ft. A-C Type B vibrating screen, 5/8-in. sq. aperture. Water added here.
7. 1 @ 36-in.×20-ft. picking conveyor, 39 f.p.m., 3-hp. motor.
8. By cars to dump.

FIG. 152. CÍA. DE MINAS DE COLQUIRI.

Legend for Fig. 152—Continued:

9. 1 @ 28-in. Traylor TY reduction gyratory, Tex-rope drive, 60-hp. motor, set for 3/4-in. product. Water added to discharge.
10. 1 @ 18-in.×52-ft. bucket elevator, 450-r.p.m., 30-hp. motor.
11. 2 @ 2-deck 3×6-ft. Aero-vibe screens; 3/8-in. and 6-mm. apertures.
12. 1 @ 42×16-in. Traylor "A-A" rolls, 71 r.p.m., 60-hp. motor.
13. 2 double 4-compartment Harz jigs. One side only for each of the four products sent thereto.
14. Tailing to storage.
15. Drag-belt dewaterer, 4 i.p.f. slope, 60 f.p.m., 3-hp. motor.
16. 1 @ 4×8-ft. Traylor rod mill, 24.7 r.p.m., 50-hp. motor, Tex-rope drive.
17. 1 @ 8-in.×45-ft. bucket elevator, 365 f.p.m., 25-hp. Motoreducer.
18. 2 @ 3×6-ft. Aero-vibe screens, 1.5-mm. aperture.
19. 2 @ 2-deck 3×6-ft. Aero-vibe screens, 4-mm. and 2-mm. apertures.
20. See note (13).
21. 2 @ 3×6-ft. Aero-vibe screens, 1.5-mm aperture.
22. 1 @ 36-in. Akins classifier, 3 1/2 i.p.f. slope, 4 r.p.m., 3-hp. motor.
23. 1 @ 6-spigot Fahrenwald sizer.
24. 2 Deister Plat-O tables.
25. 8 Deister Plat-O tables, two each for spigots 4, 5, 6; one each for spigots 2 and 3.
26. 5 Deister Plat-O tables, one each for tables (24) and the coarse table (25), one for the next three tables (25), and one for the four fine tables (25).
27. Drag belt; slope, 4 i.p.f.; 26 f.p.m.
28. 1 @ 4×10-ft. Traylor rod mill, 26.6 r.p.m., 60-hp. motor.
29. 1 @ 10×10-ft. Denver conditioner, 214 r.p.m., 7 1/2-hp. motor.
30. 2 @ 10-cell No. 18 Denver Sub-A Special flotation machines in parallel. Feed to cell 5; cells 1–4 are cleaners as per flow diagram.
31. To storage.
32. Drag belt; slope, 4 i.p.f., 3-hp. motor.
33. 1 @ 3×8-ft. A-C rod mill, 33.7 r.p.m., 30-hp. motor, Tex-rope drive.
34. 1 @ 3×20-ft. Akins classifier, 4 r.p.m., slope 3 1/2 i.p.f., 3-hp. motor.
35. 1 @ 6-spigot Concenco hydraulic sizer.
36. 1 @ 5-ft. hydraulic cone.
37. 1 @ 10-ft. hydraulic cone.
38. 6 Deister-Overstrom diagonal-deck tables; two taking first two spigots of (35) and one table each to the remaining two products of (35) and the sands of (36) and (37).
39. 2 @ 2-in. Wilfley pumps, 38-ft. head, 1,310 r.p.m., 7 1/2-hp. motors.
40. 3 @ 10-ft. hydraulic cones.
41. 3 Deister-Overstrom diagonal-deck tables.
42. 1 @ 50-ft. thickener, 7 min. per rev., 7 1/2-hp. motor.
43. From tables taking feed from (35).
44. From tables taking feed from (36) and (37).
45. 5 Deister-Overstrom diagonal-deck tables.
46. 8 Deister-Overstrom diagonal-deck tables, each taking from one of tables (41) and (45).
47. 4 Deister-Overstrom diagonal-deck tables, each taking from two of tables (46).
48. Drag belt, 24 f.p.m., slope 4 i.p.f.
49. 1 @ 4×5-ft. A-C ball mill, 25 r.p.m., 50-hp. direct-connected motor.
50. 1 @ 18-in.×13-ft. simplex rake classifier, 17 s.p.m., 3 1/2 i.p.f.
51. 1 @ 5×5-ft. Denver conditioner, 354 r.p.m., 3-hp. motor.
52. 1 @ 20-ft. thickener, 6 min. per rev., 3-hp. motor. Overflow clear.
53. 1 @ 10-cell No. 18 special Denver Sub-A flotation machine, fed at cell 5, cells 1–5 used counter-flow as cleaners.
54. 2 Deister-Overstrom diagonal-deck tables.
55. 1 @ 12-in.×20-ft. bucket elevator, 354 f.p.m., 7 1/2-hp. motor.
56. 1 @ 30-ft. thickener, 4 min. per rev., 5-hp. motor. Clear overflow.
57. 1 @ 6-ft. 3-leaf American filter, 5 min. per rev.
58. 1 @ 9×24-ft. Lowden drier, 3 ft. for coarse and 6 ft. for fine BARRILLA (concentrate).
59. Drag belt, 4 i.p.f. slope, 12 f.p.m., 3-hp. motor.
60. 1 @ 50-ft. thickener, 9 min. per rev., 7 1/2-hp. motor.
61. Denver unit cell.

Summary. Three-stage crushing; 4-stage step-grinding of middling; coarse roughing on jigs and tables to discard rock tailing; flotation to scalp sulphide out of reground middling; table concentration of flotation tailing (tin rougher concentrate) to make finished tin concentrate, rock tailing, and a middling which is reground, rescalped by flotation, and reconcentrated by tabling.

A sink-float suspension run on a 25-ton experimental unit treating >2-mm. material gave promising results (*22 MMt 71*).

Cía. Minera Unificada del Cerro de Potosí. Fig. 153 (*Q; 2 #4 FMQ 11*).

Location: Potosi, Bolivia, S. A.

Ore: Cassiterite (2.5%), stannite (0.7%), chalcopyrite (0.25% Cu), and pyrite (35%) with quartz and barite in slate and porphyry.

[General data continued on p. 234.]

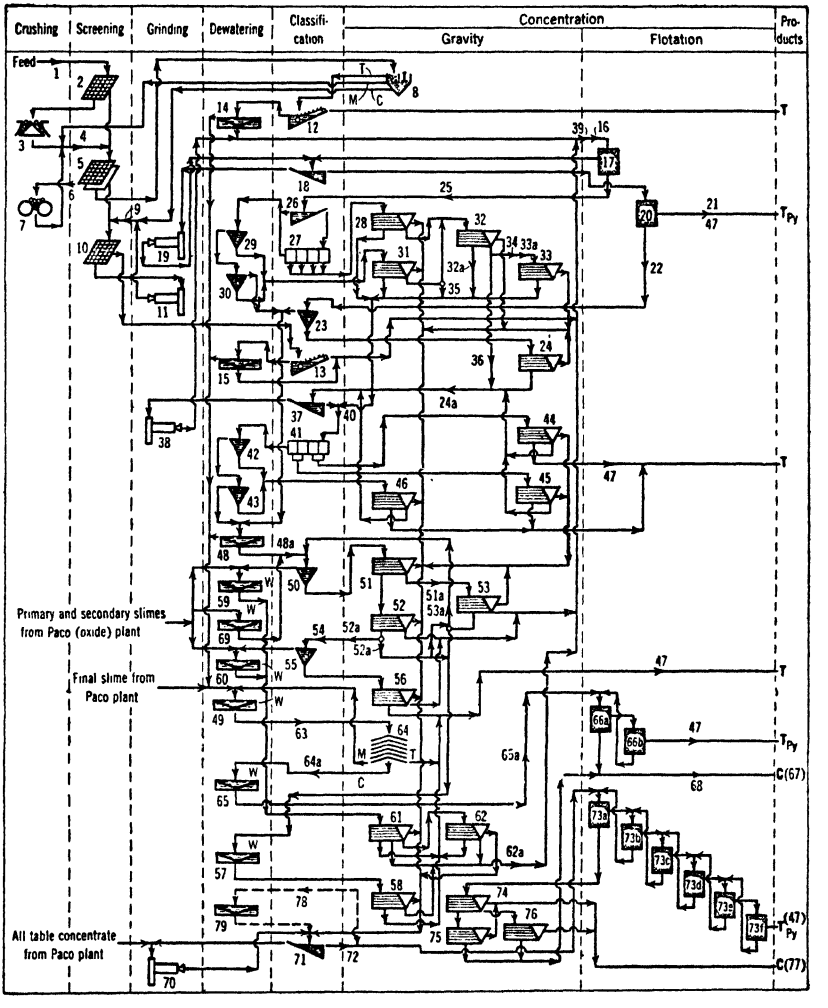

Legend for Fig. 153:

1. Coarse-crushed ore from mine by Bleichert double-rope tramway; 1 @ 350-ton wood bin; 1 @ 24-in.×56-ft. belt conveyor, +19° slope, 100 f.p.m., 10-hp. motor; 1 @ 600-ton stone ore bin; 2 inclined (21°) conveyor belts in parallel, 156 f.p.m., 3-hp. motors.

2. 2 @ 3×6-ft. Type B A-C screens, 3/4-in. sq. opening.

3. 2 @ 5-ft. standard cone crushers, 60-hp. motors.

4. 2 @ 20-in.×35-ft. bucket elevators, 354 f.p.m., 10-hp. motors.

5. 6 @ 3×6-ft. 2-deck Aero-vibe screens, 3.6- and 0.9-mm. apertures.

6. 1 @ 20-in.×24-ft. conveyor, 6° slope, 157 f.p.m., 5-hp. motor.

7. 3 @ 42×16-in. Type A Traylor rolls, 118 r.p.m., 70-hp. motors.

8. 2 @ 24×36-in. 4-compartment Harz jigs, 230 r.p.m.; 3-hp. motors; 1 @ 42×42-in. 3-compartment Bendelari jig, 160 s.p.m., 7 1/2-hp. motor.

9. 2 @ 20-in.×35-ft. bucket elevators, 354 r.p.m., 20-hp. motors.

10. 4 @ 3×6-ft. Aero-vibe screens, 0.5-mm. slot screen.

11. 2 @ 4×10-ft. A-C ball mills, 2-in. balls, 26 r.p.m., 60-hp. motors.

12. 16-ft. drag belt, 4 i.p.f. slope, 50 f.p.m., 3-hp. motor.

13. 2 @ 15-ft. drag belts, 4 i.p.f. slope, 50 f.p.m., 3-hp. motors.

14. 1 @ 30-ft. thickener, 5 min. per rev., 5-hp. motor.

15. 1 @ 40-ft. thickener, 8 3/4 min. per rev., 10-hp. motor.

16. 2 @ 4-in. Wilfley pumps, 36 ft. static head,

FIG. 153. CÍA. MINERA UNIFICADA DEL CERRO DE POTOSÍ.

Legend for Fig. 153—Continued:

196 ft. of line, 1,450 r.p.m., 40-hp. motors; 1 @ 8-way distributor.

17. 8 @ 5-cell No. 18 Special Denver Sub-A flotation machines, 7 run once-through, the eighth run with 2-step middling counterflow; 311 r.p.m., 7 1/2-hp. motors.

18. 1 @ 6×18 1/2-ft. rake classifier, slope 4 i.p.f., 26 s.p.m., 3-hp. motor.

19. 1 @ 4×12-ft. A-C ball mill, 2-in. balls, 32 r.p.m., 50-hp. motor.

20. 4 @ 5-cell No. 18 Special Denver Sub-A flotation machines, 3 run once-through, the fourth run with 2-step middling counterflow; 311 r.p.m., 7 1/2-hp. motors.

21. 1 @ 3-in. Wilfley pump, 18-ft. static head, 277 ft. of line, 1,825 r.p.m., 20-hp. motor.

22. 2 @ 3-in. Wilfley pumps, 31-ft. static head, 195 ft. of line, 1,450 r.p.m., 20-hp. motors.

23. 10-ft. cone.

24. 3 Deister-Overstrom tables, 311 s.p.m.

24*a*. 20-in.×40-ft. elevator, 515 f.p.m., 20-hp. motor.

25. 2 @ 4-in. Wilfley pumps, 31-ft. static head, 71 ft. of line, 1,450 r.p.m., 30-hp. motors.

26. 1 @ 36-in. Akins classifier, 4 i.p.f. slope, 2 1/2 r.p.m.

27. 2 @ 4-spigot Fahrenwald sizers.

28. Each pair of spigots to 1 each Deister Plat-O table, 311 s.p.m., and 1 Deister-Overstrom table, 265 s.p.m.; 4 tables in all.

29. 2 @ 7-ft. hydraulic cones.

30. 2 @ 10-ft. hydraulic cones.

31. 4 tables, 2 each Deister Plat-O and Deister-Overstrom.

32. As (31).

32*a*. 1 @ 3-in. Wilfley pump, 45-ft. static head, 124-ft. line, 1,250 r.p.m., 15-hp. motor.

33. 1 Deister-Overstrom table, circulating middling.

33*a*. 1 @ 8-in.×22-ft. elevator, 220 f.p.m., 55-hp. motor.

34. From finest-sand tables.

35. From 1 of tables treating spigot from 10-ft. cone.

36. From 2 tables treating Fahrenwald sands.

37. 1 @ 4 1/2×16 1/3-ft. rake classifier, 4 i.p.f. slope, 23 s.p.m., 5-hp. motor.

38. 1 @ 4×10-ft. A-C ball mill, 2-in. balls, 26 r.p.m., 50-hp. motor.

39. 1 @ 3-in. Wilfley pump, 40-ft. static head, 106 ft. of line, 1,450 r.p.m., 15-hp. motor.

40. 1 @ 3-in. Wilfley pump, 27-ft. static head, 80 ft. of line, 1,450 r.p.m., 30-hp. motor; and 1 @ 3-in. Wilfley pump, 45-ft. static head, 124 ft. of line, 1,250 r.p.m., 15-hp. motor.

41. As (27).

42. As (29).

43. As (30).

44. 3 Deister-Overstrom tables.

45. As (44).

46. 4 Deister-Overstrom tables.

47. To storage.

48. 2 @ 30-ft. thickeners.

48*a*. 1 @ 2-in. Wilfley pump, 17-ft. static head, 82-ft. line, 1,450 r.p.m., 5-hp. motor.

49. 1 @ 70-ft. traction thickener, 13 min. per rev. Clear overflow.

50. 6 @ 10-ft. hydraulic cones, arranged 1–2–3.

51. 8 Deister-Overstrom tables.

51*a*. 1 @ 6-in.×18-ft. elevator, 306 f.p.m.

52. As (46).

52*a*. Part.

53. 5 Deister-Overstrom tables.

53*a*. Part by 1 @ 2-in. Wilfley pump, 21-ft. static head, 85-ft. line, 1,450 r.p.m., 7 1/2-hp. motor.

54. 1 @ 2-in. Wilfley pump, 22-ft. static head, 75 ft. of line, 1,730 r.p.m., 7 1/2-hp. motor.

55. 1 @ 7-ft. hydraulic cone.

56. 1 Deister-Overstrom table.

57. 1 @ 25-ft. thickener, 4 1/2 min. per rev., 3-hp. motors.

58. 3 Deister-Overstrom tables.

59. 1 @ 25-ft. thickener, 2 1/2 min. per rev.

60. 1 @ 30-ft. thickener, 6 min. per rev.

61. As (46).

62. As (56).

62*a*. 1 @ 2-in. Wilfley pump, 32-ft. static head, 230-ft. line, 1,800 r.p.m., 7 1/2-hp. motor.

63. 2 @ 4-in. Wilfley pumps.

64. 1 @ 20-deck 19-ft. round table, 1/4 r.p.m. Concentrate, 5 to 15% Sn (*22 MMt 71*).

64*a*. 2 @ 3-in. Wilfley pumps, 41-ft. static head, 306-ft. line, 1,450 r.p.m., 30-hp. motors.

65. 1 @ 32-ft. thickener, 4 1/2 min. per rev.

65*a*. 1 @ 2-in. Wilfley pump, 30-ft. static head, 50-ft. line, 1,450 r.p.m., 15-hp. motor.

66. 1 @ 3-cell No. 15 Denver Sub-A flotation machine, 392 r.p.m., 5-hp. motor. Fed at cell 2.

67. Low-grade.

68. 1 @ 15-in.×27-ft. bucket elevator, 415 f.p.m., 7 1/2-hp. motor; 1 @ 25-ft. thickener, 4 3/4 min. per rev., 3-hp. motor, overflow clear.

69. 1 @ 15-ft. thickener, 1 3/4 min. per rev., 3-hp. motor.

70. 1 @ 3×8-ft. A-C ball mill, 2-in. balls, 35 r.p.m., 50-hp. motor.

71. 1 @ 2 1/2-ft. simplex rake classifier, 3 i.p.f. slope, 30 s.p.m., 3-hp. motor.

72. 1 @ 2-in. Wilfley pump, 26 ft. static head, 42-ft. line, 10-hp. motor.

73. 2 @ 8-cell No. 15 Denver Sub-A flotation machines, 392 r.p.m., 5-hp. motors; fed at cell 6.

74. 2 Deister-Overstrom tables, 311 s.p.m.

75. 1 Deister-Overstrom table, 311 s.p.m.

76. As (75).

77. High-grade.

78. Alternative or part.

79. 1 @ 12-ft. thickener, 3 min. per rev.

Capacity: 750 metric tons sulphide ore as above and 750 tons oxidized ore in a parallel sand-table section per 24 hr. All oxide slimes sent directly to the sulphide plant and all oxide-plant rough concentrate joined with rough sulphide-plant concentrate for regrinding (see Fig. 153, item 70).

Assays: Feed, 2% Sn; concentrate (high-grade): 60 to 65% Sn; Ag, 2 oz.; Pb, 0.02%; Zn, 0.18; Cu, 0.20; As, 0.25; Sb, 0.10; Bi, 0.02; S, 1.65; Fe, 2.5; SiO_2, 8.0%. Low-grade concentrate: Sn, 30%; Ag, 1.50 oz.; Pb, 0.12%; Zn, 0.25; Cu, 0.35; As, 0.88; Sb, 0.15; Bi, 0.04; S, 3.71; Fe, 6.40; SiO_2, 36%. Tailing: 0.7 to 0.8% Sn aver.

Recovery: 50 to 60%.

Ratio of concentration: 50 : 1.

Running time: 85%; principal losses: repairs, 5; power, 3; fiestas, 2; water shortage, 5%.

Power: Hydroelectric; Diesel stand-by. Comes in at 44,000 volts (Al line); motors, 440-volt, 50-cycle. CONSUMPTION, 58.5 hp. per ton milled, average.

Labor: Bolivian; 3.84 tons per man-shift operating; repairs, 25 tons.

Water. 9 mi. by gravity pipe line from a reservoir. CONSUMPTION: 4 tons new water per ton of ore milled; 10 tons total; normal re-use, 60%; 90% in dry season.

Mill building: Timber and steel frame, corrugated-iron walls and roof, CEL-O-GLASS windows. Sloping site. Cement and sandstone-paved floors. Heated with salamanders.

Machinery handling: Hand crawls over crushers and flotation machines.

Tailing disposal: Jig tailing to river (stacked by aerial tram in dry season); pyrite float pumped to storage dam; table tailing by gravity to storage dam.

Distances: Mine to mill about 1.6 mi. by aerial tram (Bleichert double-rope, capacity 60 t.p.h.). Concentrate (<1.0% H_2O) hauled about 0.6 mi. to railroad, thence to coast, boat to England or U. S. A.

Summary. Two-stage crushing through 3.6-mm. Tailing scalped out of >1-mm. size in jigs; jig middling together with <1-mm. primary stream ground through 0.5-mm. Pyrite scalped out by flotation and quartzitic gangue removed by elaborate step classification and tabling, with finest slime treated on a round table. Round-table concentrate desulphidized by flotation. All gravity concentrate combined, reground, floated to remove pyrite, and tabled to produce high- and low-grade concentrate.

Cía. Minera de Oruro. Fig. 154 (*Q*).

Location: Machacamarca, Bolivia, S. A.

Ore: Cassiterite with pyrite, galena, franckeite, and stephanite, in slate.

Capacity: 250 tons per 24 hr.

Assays: Feed: 4% Sn, 20 oz. Ag per ton; concentrate: silver precipitate, 32% Ag; tin, 46% Sn.

Recovery: Ag, 77%; Sn, 56%.

Ratio of concentration: Varies with ore, which is highly variable.

Water comes 2 mi. from river by ditch. CONSUMPTION, 30 tons per ton of ore; about 20% re-used during dry period.

Power: Hydroelectric, purchased. Comes 3 mi. at 13,000 volts. Motors, 500-volt, 50-cycle. CONSUMPTION, 62 hp-hr. per ton of ore.

Labor: Native Bolivian except one foreign foreman; 0.5 tons per man-shift.

Running time: 96%.

Mill building: Slightly sloping site. Timber frame with galvanized-iron covering. Concrete floors, slope 3/16-in. per ft. in flotation section, which is insufficient. Unheated. Hand cranes throughout.

Transportation: Mine to mill, 23 mi. in 25-ton railroad cars. Concentrate all shipped to United States. Silver precipitate shipped with 0.2% moisture, tin concentrate with 2% moisture.

Tailing disposal: Pumped to dam, from which water is recovered during dry season.

Legend for Fig. 154:

1. 25-ton railroad cars; hand unloading; bin; 1 @ 18-in.×42-ft. conveyor, 164 f.p.m.; 1 @ 20-in. ×85-ft. conveyor, +18°, 164 f.p.m.

2. 1 @ 3-ft. standard cone crusher, 580 r.p.m., 50-hp. motor.

3. 1 @ 18-in.×15-ft. sampling conveyor; 1 @ 14-in.×157-ft. conveyor, 40 ft. at +18°, 246 f.p.m.; traveling tripper; 7 ore bins, 1,400-tons combined capacity; 1 @ 14-in.×205-ft. conveyor, 103 ft. at +16°, 246 f.p.m.

4. 1 @ 3×6-ft. Leahy screen, 12-mm. opening.

5. 1 @ 42×16-in. Traylor Type AA rolls, 60 r.p.m.

6. 1 @ 14-in.×67-ft. conveyor, +21°, 196 f.p.m.

7. 2 Hum-mer screens in parallel, 2-mm. openings (3.3-mm. apertures for flotation ore).

8. 1 @ 14-in.×24-ft. conveyor, 164 f.p.m.

9. 2 @ 42×16-in. Traylor Type A rolls, 90 and 125 r.p.m.

10. 1 @ 12-in.×36-ft. bucket elevator, 230 f.p.m.

11. 1 @ 14-in.×90-ft. conveyor, +12°, 65 f.p.m.; 1 @ 14-in.×46-ft. conveyor, 196 f.p.m.; traveling tripper; 7 bins, 1,600-ton combined capacity, to store ore according to its character.

12. High-silver ore.

13. Hand-trammed cars, 0.7-ton capacity; mixer, salt and TAQUIA (llama dung) added; 8-in.×31-ft. bucket elevator, 180 f.p.m.; 1 @ 14-in.×90-ft. conveyor, 190 f.p.m.; 1 @ 5-ton surge bin.

14. 1 @ 25-ton Holt-Dern blast roaster.

15. 23 @ 2.8-ton hand-rabbled roasting furnaces.

16. 4 @ 7-ton Merton mechanical roasters.

17. 0.7-ton hand-trammed cars; cooling yard, 2,000 sq. meters; 0.7-ton hand-trammed cars; car hoist.

18. 50 @ 15-ft. 12-ton downward-percolation leaching tanks, coco-matting bottoms.

19. Scrap-iron precipitation of cement copper.

20. Calcium-sulphide precipitation of silver sulphide.

21. Sulphide and oxide ore.

22. Sulphide ore to 1 of 2 parallel grinding-flotation units with substantially the same flowsheets and equipment. 1 @ 14-in.×83-ft. conveyor, +11°, 164 f.p.m.

23. 1 @ 4×10-ft. A-C rod mill, 50-hp., 26 r.p.m.

24. 1 @ 3×18 1/3-ft. simplex rake classifier, slope 4 i.p.f., 30 s.p.m.

25. 1 @ 6-ft. Denver conditioner, 315 r.p.m., 7 1/2-hp. motor.

26. 1 @ 12-cell No. 18 Denver Sub-A flotation machine, dual drive, 7 1/2-hp. motors, 400 r.p.m.; *a* = cell 3, *b* = cell 4, *c* = cells 5 and 6, *d* = cells 7 to 9, *e* = cells 10 to 12, *f* = cell 1, *g* = cell 2.

27. 1 @ 20-ft. thickener, 6 m.p.r.

28. 1 @ 3-in. Dorrco pump, 52 s.p.m.; 1 @ 3-in. Wilfley pump, 7 1/2-hp., 1,450 r.p.m.

29 1 @ 6-ft. Denver conditioner, 340 r.p.m., 7 1/2-hp. motor.

30. 1 @ 10-cell No. 18 Denver Sub-A flotation machine, 7 1/2-hp. motors, 400 r.p.m.; *a* = cell 3,

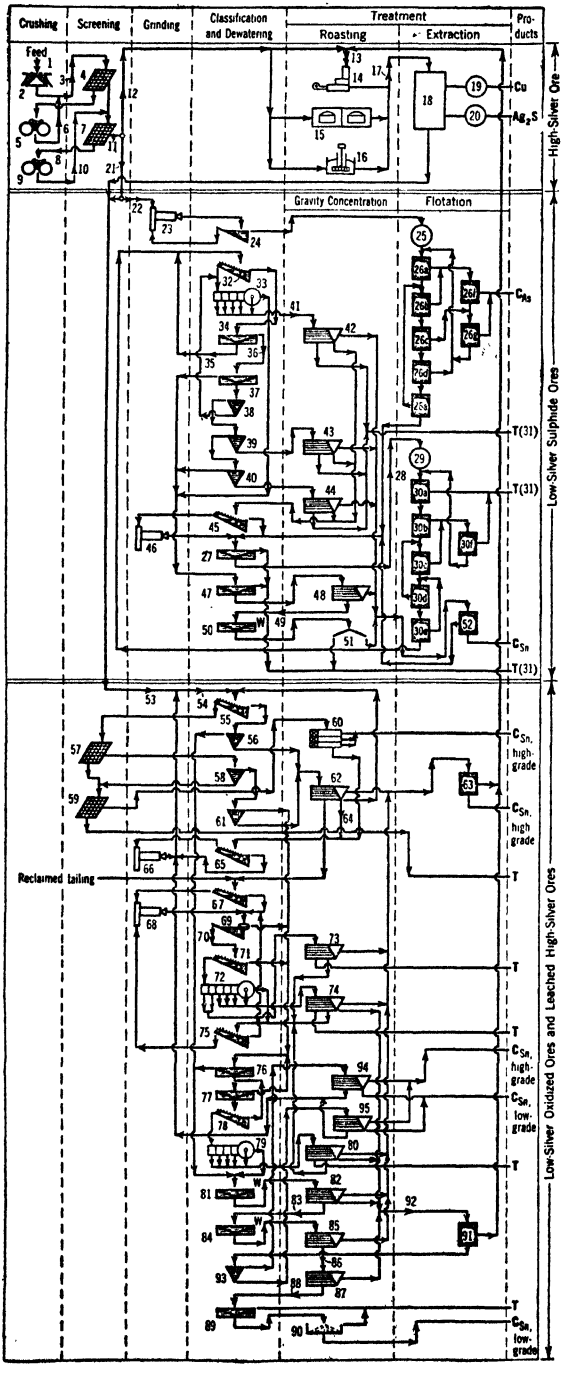

FIG. 154. CÍA. MINERA DE ORURO.

Legend for Fig. 154 on page 235.

Legend for Fig. 154—Cont'd.:

b = cell 4, *c* = cells 5 and 6, *d* = cells 7 and 8, *e* = cells 9 and 10, *f* = cells 1 and 2.

31 Stored.

32. 10-in.×25-ft. drag belt, 2 3/4 i.p.f. slope, 26 f.p.m.

33. 1 @ 5-spigot Fahrenwald classifier.

34. 1 @ 8-ft. thickener, 1 1/4 m.p.r.

35. 1 @ 3-in. Dorrco pump, 50 s.p.m.

36. 1 @ 3-in. Wilfley pump, 7 1/2-hp., 1,450 r.p.m.

37. 1 @ 20-ft. thickener, 5 min. per rev.; 3-in. Dorrco pump, 40 s.p.m.

38. 1 @ 2 2/3-ft. hydraulic cone.

39. 1 @ 5-ft. hydraulic cone.

40. 1 @ 10-ft. hydraulic cone.

41. Separately.

42. 5 Deister-Overstrom tables in parallel, 300 s.p.m.

43. 1 as (42).

44. 2 as (42).

45. 1 @ 8-in.×15-ft. drag belt, 4 i.p.f. slope, 18 f.p.m.

46. 1 @ 3×8-ft. A-C rod mill, 30 r.p.m., 30-hp. motor.

47. 1 @ 20-ft. thickener, 5 m.p.r.; 1 @ 2-in. Dorrco pump, 62 s.p.m.

48. 4 as (42)

49. 1 @ 2-in. Wilfley pump, 1,600 r.p.m.

50. 1 @ 20-ft. thickener, 5 m.p.r.; 1 @ 2-in. Dorrco pump, 62 s.p.m.

51. 1 @ 1-deck 20-ft. Anaconda round table, 4 min. per rev.

52. 1 @ No. 18 Denver unit cell, 350 r.p.m., 7 1/2-hp. motor.

53. 3/4-ton hand-trammed cars; 1 @ 150-ton bin.

54. 1 @ 14-in.×38-ft. bucket elevator, 360 f.p.m.

55. 1 @ 8-in.×10-ft. drag belt, 39 f.p.m., slope 3 i.p.f.

56. 1 @ 4-ft. classifying cone.

57. 1 @ 3×9-ft. trommel, 1.27-mm. aperture, 14 r.p.m.

58. 1 Deister classifying cone.

59. 1 as (34), 1 1/4-in. aperture, to scalp off stone.

60. 2 @ 20×31-in. 3-compartment Harz jigs, 240 s.p.m., making hutch concentrate.

61. 5 Deister classifying cones in series.

62. 5 Deister-Overstrom tables in parallel, 280 s.p.m.

63. 1 @ 18-in. Denver batch flotation machine, 400 r.p.m., 7 1/2-hp. motor.

64. From table treating spigot of first cone (61).

65. 1 @ 8-in.×5-ft. drag belt, slope 6 1/2 i.p.f., 43 f.p.m.

Legend for Fig. 154—Continued:

66. 1 @ 3×5-ft. rod mill, 28 r.p.m., 25-hp. motor.
67. 1 @ 8-in.×13-ft. drag belt, slope 4 1/4 i.p.f., 37 f.p.m.
68. 1 @ 4×8-ft. rod mill, 24 r.p.m.
69. 1 @ 10-ft.(bowl) bowl-rake classifier, 3/4 r.p.m., 16 s.p.m
70. 1 @ 14-in.×32-ft. bucket elevator, 275 f.p.m.
71. 1 @ 12-in.×16-ft. drag belt, slope 3 i.p.f., 27 f.p.m.
72. 1 @ 6-spigot Fahrenwald classifier.
73 2 Deister-Overstrom tables in parallel, 300 s.p.m.
74. 6 as (73), 300 to 330 s.p.m.
75. 1 @ 8-in.×13-ft. drag belt, slope 4 i.p.f., 37 f.p.m.
76. 1 @ 50-ft. thickener, 2 1/2 min. per rev.; 1 @ 4-in. Dorrco pump, 50 s.p.m.
77. 1 @ 8-ft. thickener, 1 min. per rev.; 1 @ 2-in. Dorrco pump, 50 s.p.m.
78. 1 @ 8-in.×13-ft. drag belt, slope 2 1/2 i.p.f., 27 f.p.m.
79. As (33).
80. 5 as (74), 310 s.p.m.
81. 1 @ 33-ft. thickener, 10 min. per rev.; 1 @ 4-in. Dorrco pump, 50 s.p.m.; 1 @ 6-way distributor.
82. 6 as (80).
83. 1 @ 4-in. Krogh pump, 910 r.p.m.
84. 1 @ 20-ft. thickener, 4 m.p.r.; 1 @ 4-in. Dorrco pump, 40 s.p.m.
85. 3 as (80), 300 s.p.m.
86. 1 @ 3-in. Krogh pump, 910 r.p.m.; 1 @ 5-way distributor.
87. 5 as (80), 290 s.p.m.
88. 1 @ 20-in.×34-ft. bucket elevator, 250 f.p.m.
89. 1 @ 15-ft. thickener, 1 m.p.r.
90. 6 @ 18-ft. building buddles.
91. 1 @ 6-ft. K-and-K flotation machine, 200 r.p.m.
92. 1 @ 14-in.×23-ft. bucket elevator, 318 f.p.m.
93. Classifying cone.
94. 1 as (80).
95. 1 as (80).

Summary. Three-stage crushing to 2- or 3-mm. Recovery treatment is essentially repetitive gravity concentration of cassiterite from siliceous gangue after silver and copper have been leached out or arsenic and iron have been floated off, according to the character of the feed.

American Smelting & Refining Co., San Antonio mine. Fig. 155 (*137 J 126*)

Location: Chihuahua, Mexico.
Ore: Argentiferous cerussite and plumbojarosite with cassiterite in a ferruginous lime-quartz gangue.
Capacity: 200 tons per 24 hr.
Assays: Feed: 12% Pb, 300 gm. Ag per ton, 0.5% Sn, 15 to 20% Fe, 10 to 14% CaO, and 30% SiO_2
Recovery: Pb, 85%; Ag, 85%; Sn, 35%.
Ratio of concentration: Pb, 5.7 : 1; Sn, 200 : 1.

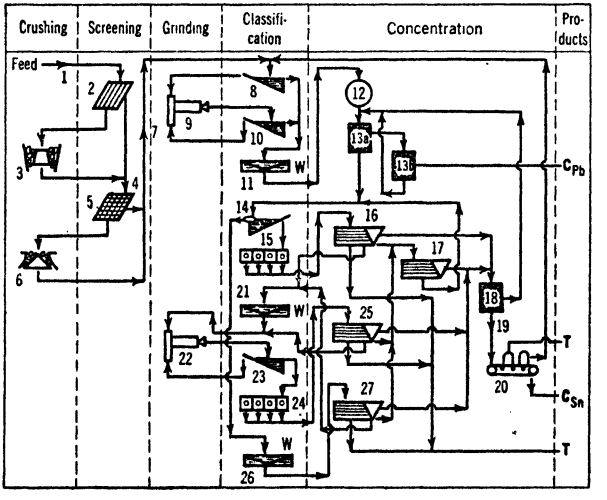

Legend for Fig. 155:

1. 20 mi. by rail from mine to mill; bins; conveyor.
2. Grizzly.
3. 1 @ No. 5 A-C gyratory crusher, set 2 1/2- to 3-in.
4. Conveyor with suspended magnet.
5. Leahy screen, 7/16-in. aperture.
6. 1 @ 4-ft. Symons cone, set 1/2-in
7. Bins; conveyor.
8. 1 @ 21-ft. simplex rake classifier.
9. 1 @ 5×10-ft. A-C rod mill, 3-in. rods to 6 in. below center, 22 r.p.m., 100-hp. motor, 70% solids, 300% circulating load.

FIG. 155. SAN ANTONIO mill, A. S. & R. Co.

Legend for Fig. 155—Continued:

10. Duplex rake classifier, overflow 30% solids.
11. 1 @ 50-ft. thickener.
12. Conditioning tank.
13. 1 @ 16-cell Fahrenwald flotation machine, *a* = cells 1 to 12; *b* = cells 13 to 16.
14. 1 @ 12(diam.)×21-ft. bowl-rake classifier, overflow 10 to 15% solids.
15. 1 @ 4-spigot Deister cone classifier; spigot products sent separately to (16).
16. 10 shaking tables; 5 treat spigot product No. 1 from (15), 2 each to spigots 2 and 3, 1 for spigot 4.
17. 6 shaking tables in parallel.
18. 1 @ 6-cell Fahrenwald flotation machine.
19. Settled; dried in a Lowden drier.
20. Wetherill magnetic separator.
21. Thickener.
22. 1 @ 4×7-ft. A-C rod mill.
23. 1 as (8).
24. 1 as (15); products sent separately to (25).
25. 10 tables apportioned as (16).
26. Thickener, spigot 20% solids.
27. 13 Deister Plat-O slimers.

Summary. Two-stage crushing to <1/2-in.; one-stage primary rod-mill grind to flotation-feed size; primary rougher-cleaner flotation to remove the bulk of the lead and silver; sand-slime separation of flotation tailing and separate tabling of the products after hydraulic classification of sands; all primary-table middling reground and retabled, after hydraulic classification, in a separate circuit; all primary-table high-grade concentrate refloated for a lead middling and the flotation tailing dried and reconcentrated magnetically to remove iron; all low-grade table concentrate retabled, making rich concentrate for the flotation-magnetic circuit and cleaner tailing for return to the middling-regrind circuit.

Beatrice mine. Fig. 156 (*46 MM 20; 126 J 1016*).

Location: Selibin, Fed. Malay States.
Ore: Cassiterite with arsenopyrite and chalcopyrite in tremolite and fluorite.
Assays: Feed: 12 to 20% cassiterite.

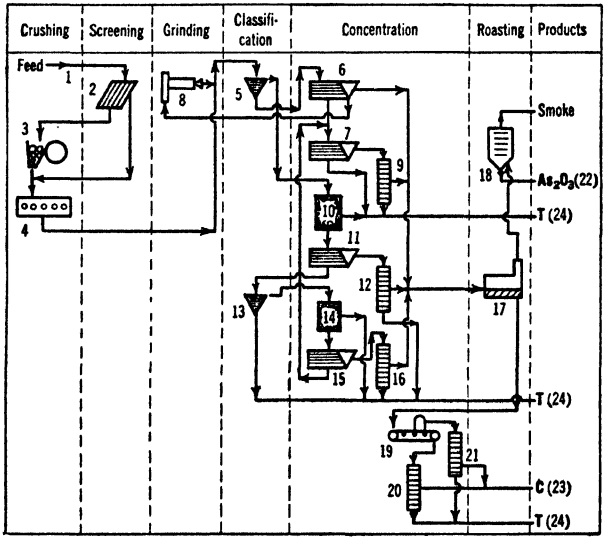

Legend for Fig. 156:

1. Trucks.
2. Grizzly, 2-in. aperture.
3. Jaw crushers, set 2-in.
4. 35 @ 850-lb. California stamps, 12-m screen.
5. Cone classifiers.
6. 8 James sand tables.
7. 2 as (6).
8. Ball mill.
9. Sluice.
10. Flotation.
11. 6 James slime tables.
12. As (9).
13. Box classifier.
14. Flotation.
15. 6 as (11).
16. Sluice.
17. Roasting furnace.
18. Condenser.
19. Magnetic separator.
20. Sluice.
21. Sluice.
22. Sold for sheep dip at about $5 per ton (1932).
23. 97% SnO_2.
24. Reworked by tributers.

FIG. 156. BEATRICE mill.

Mawchi Mines, Ltd. Fig. 157 (*49 IMM 641*).

Location: State of Bawlake, Southern Shan States, Burma.

Ore: Cassiterite, wolframite, and scheelite, all fairly coarse grained, in gangue of quartz, granite, and slate; minor accessories, pyrite, arsenopyrite, chalcopyrite, galena.

Assays: Mine ore, SnO_2 and WO_3, each about 1.25%; moisture, 8%. Concentrates, $SnO_2 + WO_3$, 70%; As + S, less than 1%.

Capacity: 12,500 tons per month.

Recovery: Sn, 90%; W, 83%. Final separation of Sn from W is made in England.

Ratio of concentration: 30.7 : 1.

Water: 17 tons per ton ore.

Power: 400 kva. @ 0.48 d. per kw-hr. (hydro- and Diesel-generated at 50 cycles, 3,300 volts).

General: Steeply terraced site. Locality 100 mi. by road from railroad.

Costs, shillings per dry ton: European staff, 0.65; labor (130 man-shifts per day), 1.07; stores, 1.01; power, 0.75; renewals, 0.63; misc., 0.03; total, 4.14.

Legend for Fig. 157:

1. 1 @ 1,100-ton bin; 2 apron feeders; 24-in. belt conveyor.
2. Swinging grizzly, 2 1/2-in. spacing.
3. 1 @ 10×14-in. Blake-type jaw crusher, set 2.5-in.
4. 1 @ 15-mm. trommel.
5. 1 @ 24-in.×35-ft. sorting belt with suspended magnet, 50 f.p.m., 10 women picking; 3.5% of feed removed, assay lower than mill tailing.
6. 1 @ 5-in. Newhouse crusher.
7. Leahy screen, 8-mm. aperture.
8. 1 @ 30×14-in. rolls.
9. As (7), 6-mm. aperture.
10. As (7), 3-mm. aperture.
11. As (7), 1.4-mm. aperture.
12. 2 jigs, see *B*, Table 112.
13. 1 jig, see C_1, Table 112.
14. 1 jig, see C_2, Table 112.
15. Deslimer.
16. 2 jigs, see *D*, Table 112.
17. Drag dewaterer.
18. As (8).
19. 2 Leahy screens.
20. 1 @ 4×8-ft. rod mill.
21. 2 Fahrenwald classifiers; spigot products separately to (22).
22. 11 Plat-O tables.
23. 1 as (22).
24. As (7), 4-mm. aperture.
25. As (8).
26. As (7), 1-mm. aperture.
27. 2 jigs, see *CM*, Table 112.
28. 2 as (27).
29. Drag dewaterer.
30. 1 as (8).
31. Hydraulic deslimer.
32. 2 jigs, see *DM*, Table 112.
33. As (31).
34. Rake classifier.
35. Conical ball mill.
36. Deslimer.
37. 1 @ 5-spigot Fahrenwald classifier; spigot products separately to (38).
38. 5 Wilfley tables.
39. Drag dewaterer.
40. As (35).
41. Deslimer.
42. 2 Fahrenwald classifiers; spigot products separately to (43).
43. 10 Plat-O tables.
44. Deslimer.
45. 1 as (37), spigot products separately to (46).
46. 4 Wilfley and 1 Plat-O table.
47. Deslimer.
48. Deslimer.
49. 1 Plat-O table.
50. 4 Callow cones.
51. 3 Plat-O tables and 3 James tables.
52. Deslimer.
53. 2 Plat-O tables.
54. 1 Wilfley table.
55. Deslimer.
56. 3 Callow cones.
57. Thickening cone.
58. Dewatering cone.
59. 2 thickeners.
60. Dewatering cone.
61. Hardinge ball mill.
62. Deslimer.
63. Deslimer.
64. 1 @ 3-ft. Hardinge ball mill.
65. Deslimer.
66. 1 James table.
67. Batch-flotation rougher.
68. Deslimer.
69. As (66).
70. 14 James tables.
71. As (66).
72. Drier.
73. 1 @ 4-mm. Newaygo screen.
74. 1 @ 20×14-in. rolls.
75. 1 @ 50-m. vibrating screen.
76. 1 @ 3×3-ft. mixer for magnetite and oil.
77. 1 @ 3 1/2(diam.)×9-ft. agitator, 25 r.p.m.
78. 1 Murex magnetic concentrator, shaking tray under magnet.
79. 38% Sn, 32.5% WO_3, 0.6% As, 0.6% S.
80. Furnace to burn off oil.
81. Magnetic concentrator. *M* = magnetite.
82. Batch-flotation cleaner.
83. Deslimer.
84. 1 shaking table.
85. As (84).
86. Dewatering cone.
87. 4 shaking tables.
88. Dewatering cone.
89. Buddle.

Table 112. Jigs at Mawchi mill

Name	Number in use	Type	Screen area, sq. ft.	Number of hutches	Size feed, mm.	Screen, mm.	Pulsations per min.
B	2	Cooley	20.5	4	8~6	10	200
C_1	1	Bendelari	49.0	4	6~4	8 1/2	180
C_2	1	Bendelari	36.75	3	4~1.4	6 1/2	140
D	2	Cooley	15.0	4	<1.4	3	360
CM	4	Cooley	20.5	4	4~1	6 1/2	180
DM	2	Cooley	12.0	3	<1	2 and 3	360

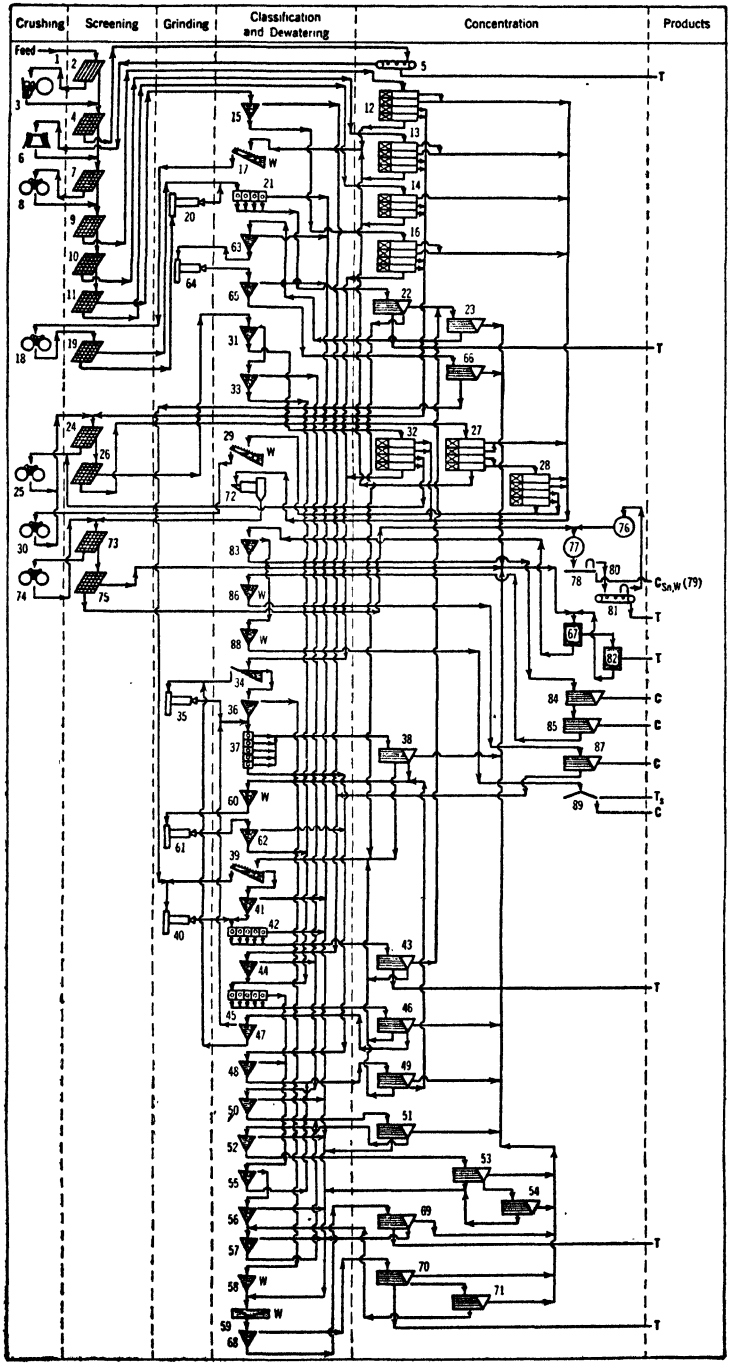

FIG. 157. MAWCHI MINES.

Legend for Fig. 157 on page 239.

Summary. Closely graded crushing, screening, and jigging, beginning at 8-mm.; primary jig middlings recrushed and separately rejigged. Fines, including recrushed jig tailings, to classifiers and tables. Coarse concentrate (8% As + S) freed from sulphides by Murex process (Sec. 12, Art. 16); fine concentrate (<1-mm.) by batch flotation. Chief aim at this mill is to make maximum possible recovery in coarse sizes, suitable for extraction of sulphides by Murex process; also to facilitate final magnetic separation of wolframite from cassiterite, not feasible with <180-m. material.

Consolidated M. & S. Co. of Canada, tin mill. Fig. 158 (*44 CIMM 611; Tref 1/42*).

Location: Sullivan concentrator, Chapman Camp, B. C.
Ore: Zinc-plant tailing (Fig. 116). Tin principally cassiterite, @ 7% >200-m., 15% <1,500-m.; gangue about 65% pyrrhotite, 5% pyrite-arsenopyrite, minor amounts of galena and marmatite.
Capacity: 5,000 t.p.d.
Assays: Feed, 0.2% cassiterite (1 to 1.5 lb. Sn per ton); concentrate, 83% cassiterite.
Recovery: 45%.
Ratio of concentration: 2,000 : 1.

Legend for Fig. 158:

1. 8-in. Wilfley pump.
2. 1 @ 33(diam.)×7 1/2-ft. Hydroseparator.
3. 200 t.p.d.
4. 2 @ 14-cell No. 30 Denver Sub-A machines in parallel.
5. Sulphide float, 3,700 t.p.d.
6. 6-in. sand pump; 10-way distributor.
7. 10 @ 5-deck tilting frames.
8. 1,096 t.p.d.
9. 1 @ 15×8-ft. thickener. Feed, 70 t.p.d.
10. 1 @ 4-cell No. 18 Special Denver Sub-A machine. *a* = cells 2 to 4, *b* = cell 1.
11. 2 t.p.d.
12. Sand pump, 2-way distributor.
13. 2 as (7).
14. Sand pump; 4-way distributor.
15. 4 Wilfley tables.
16. Sand pump.
17. 1 @ 4-ft. cone deslimer.
18. 1 Wilfley table.
19. Magnetic separator.
20. Magnetite, 1 t.p.d.
21. 2 Wilfley tables.
22. 1 Wilfley table.
23. Steam driers.

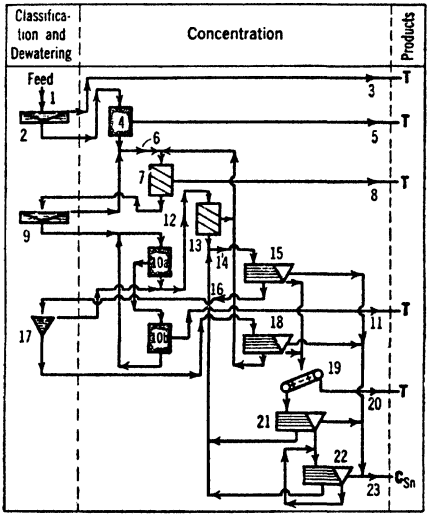

FIG. 158. CONSOLIDATED M. & S. Co., tin plant.

Summary. Sulphide roughed out by flotation and gangue by tilting frames, reducing tonnage for final cleaning on shaking tables to about 1/450th. One-stage cleaning on tables with two cleanings of primary-table middling.

45. TITANIUM

Uses. Pure metal has no special applications; its alloys serve both ferrous and nonferrous metallurgy. "Konel," Fe-Co-Ni-Ti, has the same expansion coefficient as glass, and replaces platinum in incandescent lamps. The artificial oxide is a brilliant white pigment, with notable hiding power and atmospheric resistance. Uses as pigment and/or filler are in paints, rubber, paper, asbestos shingles and siding, cosmetics, toilet soap, rayon, asphalt tile, linoleum, plastics, leather finishes, textiles, enamels, wall board, and glue. The natural oxide develops a honey-yellow glaze on ceramics, and is widely employed as a fluxing coat on electric welding rods. Titanium trichloride is a bleaching agent, other salts are employed for dyeing, and the tetrachloride is the compound used for skywriting and smoke screens.

Occurrence. Commercial supply of titanium comes from only two minerals: rutile, the dioxide (60% Ti), and ilmenite, an impure ferrous titanate (FeO,TiO_2) in which both metals are often partly displaced by others. The enormous known deposits of titaniferous magnetite are just beginning to be worked for titanium. Both rutile and ilmenite, frequently together, are found both in massive rock formations and in beach sands. The more important hard-rock localities are at Roseland, Va., where a pegmatite carries about 4% each of rutile and ilmenite; Piney River, Va., where ilmenite occurs with apatite·

Kragero, Norway; and Baie St. Paul, Quebec. The most productive beach deposits are at Manavalakurichi and Quilon, in southwestern India; at Guarapary, Boa Vista, and Prado, Brazil; and at Byron Bay, New South Wales. Portugal, Senegal, and the Cameroons produce beach concentrates (formerly also Florida and California), and ilmenite is now being recovered from the tailings of alluvial tin workings in Malaya, Billiton, and the Congo. Average TiO_2 contents of concentrates shipped from the several localities, in per cent., are: Roseland, Va., ilmenite, 54; rutile, 95 to 96; Piney River, Va. (after an acid leach), 48 to 50; Trovancore (India), 50 to 53; Brazil, 52.7; Norway, 42 to 43; and New South Wales (rutile-ilmenite mixture), 75.9. Some Indian shipments in 1939 were reported to assay: TiO_2, 60.35; Fe, 22.69; SiO_2, 0.41; S, 0.01; P, 0.03%. Bauxite is a potential source; tailing of the St. Louis plant of the Aluminum Co. at East St. Louis is reported (*30 CIMM 802*) to contain 75,000 lb. TiO_2 per day.

Production. World production is given in Table 113. Cameroon exported 120 met. tons of rutile in 1938. Data on domestic production are not available; Virginia has been the chief contributor, but some rutile-brookite concentrate has come from Hot Springs County, Ark. Demand for rutile (used mainly for welding-rod coatings and the nonferrous alloys and chemicals) is sufficiently supplied from domestic sources; that for ilmenite (mainly for pigment manufacture) requires heavy imports (over 200,000 tons annually, in recent years) coming mainly from India. But see Fig. 159.

Prices. In 1938–1939, ilmenite (50 to 60% TiO_2) was quoted at $10 to $12 per long ton, f.o.b. Atlantic ports. Rutile (94 per cent. minimum purity) at 10¢ per lb.; 88 to 90%, at $60 per long ton, c.i.f. New York. Ilmenite imports in 1938 were valued at $5.05 per long ton.

Treatment. Early (1922) practice at Roseland, Va., included crushing by stamps, classification, and Wilfley concentration; tailing discarded, middling returned to stamps, and concentrate (dried) to Wetherill magnetic separators of ilmenite from rutile. On the Florida coast, near St. Augustine, a mill operated for a short time (about 1927) on sands containing about 20% of mixed valuable minerals; concentrate from 18 Deister-Overstrom tables contained 55% ilmenite, 20% zircon, 6% rutile, 2% monazite, and 17% quartz and silicates. Magnetic separators made clean ilmenite, and middlings which were subdivided into rutile, zircon, and monazite by electrostatic separators and wet tables (*IC 6365*). For results at Byron Bay, N. S. W., where chief product is zircon, see Art. 49. For manufacture of titanium pigment from ilmenite, see *42 CME 595*. At Burdick Mineral Corp. (*IC 6365*) beach sands are passed over 30-m. Leahy screens; oversize wasted; undersize containing 60% mixed ilmenite and magnetite is tabled, and the concentrate dried and separated by low-intensity magnets to yield relatively clean magnetite and ilmenite.

Table 113. World production of titanium minerals (thousands of metric tons) (*MI*)

	Approx. per cent. TiO_2	1932	1933	1934	1935	1936	1937	1938
India (Travancore) *a*	*i* 54	50.9	53.8	76.9	129.1	142.7	184.0	256.2
Norway	*j* 44	13.9	23.3	26.6	38.0	67.4	67.5	*c*
Malaya	*c*	.....	0.2	0.5	2.5	10.5	6.4	6.6
Senegal	47	.....	0.3	0.5	3.8	3.9	*c*	8.4
Canada (Que.)	18 to 25	.....	.....	1.8	2.1	2.3	3.8	0.2
Australia	*r* 94	.....	.....	.....	.....	.....	1.1	*c*
Brazil	*r c*	.....	.....	0.1	0.3	0.7	0.9	0.5
Portugal	*i* 50	.....	0.6	0.4	0.4	0.5	1.5	0.6
Others *b*	.....	0.5	.....	0.2	0.2	0.1	0.4	*c*

a Exports.
b Includes Egypt, S. W. Africa, Cameroon.
c Not available.
i Ilmenite.
j Mostly ilmenite with minor amounts of rutile.
r Mostly rutile.

National Lead Co., Titanium Division. Fig. 159 (*Q; 23 MMt 594*).

Location: McIntyre, N. Y.
Ore: Titaniferous magnetite.
Capacity: 7,000 t.p.d.
Assays: Feed, 16% TiO_2, 30% Fe; iron concentrate, 56 to 58% Fe, 9% TiO_2; titanium concentrate, 46% TiO_2, 33% Fe; tailing, 11% TiO_2, 11% Fe.
Recovery: 47% TiO_2, 64% Fe.
Ratio of concentration: 2 : 1 total; 6 : 1, TiO_2; 3 : 1, Fe.
Mill building: Steel and concrete with corrugated transite covering. Sloping site. Heated.
Distances: Mine to mill, aver. 2,000 ft. Ilmenite concentrate trucked 26 mi. to North Creek, N. Y., thence by rail to South Amboy and St. Louis. All conveyance of wet pulp is by pipe.

Legend for Fig. 159:

1 Open-pit, 2 1/2-cyd. shovels; 1,000 to 3,000 ft. to mill by 2 @ 28-ton and 16 @ 15-ton trucks; 200-ton reinforced concrete hopper receiving at ground level; 6-chain Ross feeder.

2. 1 @ 60×48-in. Buchanan-Birdsboro jaw crusher, 4 1/2-in. closed set.

3. 1 @ 36-in.×139-ft. belt conveyor, level; 1 @ 36-in.×250-ft. belt conveyor, +18°; 1 @ 500-ton steel surge bin; 2 variable-speed pan feeders.

4. 2 @ 5×14-ft. 2-deck Ty-rock screens in parallel, 2-in. and 3/4-in. apertures (total feed about 500 t.p.h. each).

5. 1 @ 5 1/2-ft. standard cone crusher, 2 1/2-in. closed set.

6. 1 @ 5 1/2-ft. short-head cone crusher, 1/2-in. closed set.

7. 1 @ 7,000-ton steel bin; 20 Hardinge constant-weight feeders; 4 belt conveyors.

8. 4 @ 6×12-ft. open-end Marcy rod mills, 2 1/2-in. rods.

9. 4 vertical bucket elevators.

10. 8 @ 4×10-ft. Ty-rock screens (2 per rod mill), 14-m. stainless-steel Toncap.

11. Pump; distributor.

12. 12 @ 48-in. Crockett belt-type magnetic separators.

13. 4 @ 4×25-ft. Dorr DSFH classifiers, slope 2 1/2 i.p.f., 14 s.p.m., deck extensions for dewatering; feed: 16-m., sp. gr. 5.0, 20 to 25% solids; overflow, 375 g.p.m., substantially clear; rake product, 15% water.

14. 8 @ 8-spigot Fahrenwald sizers; feed: 16-m., 4.6 sp. gr., 33 to 50% solids, 200 t.p.d. ea.; overflow, 150~200-m.

15. 16 separate products from 2 classifiers per section.

16. 64 Deister Plat-O tables.

17. 1 @ 5×25-ft. Dorr DSFH classifier, slope 2 3/4 i.p.f., 14 s.p.m., with deck extension for dewatering; feed, 17% solids; overflow clear; sands, 8 to 10% solids.

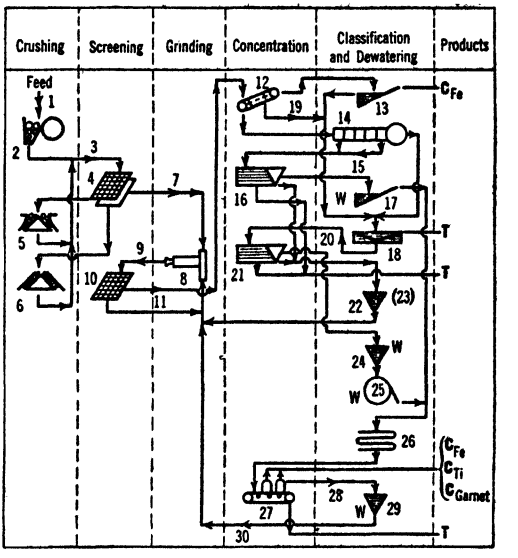

18. 4 @ 22(diam.)×6-ft. Dorr Hydroseparators; arm slope 3 i.p.f., 2/3 r.p.m.; feed: <150-m., sp. gr. 4.6, 2.5% solids, 140 tons per 24 hr.; overflow, 1,000 g.p.m.; underflow, 40% solids.

19. Overflow.

20 Wilfley pump; distributor.

21 32 Deister Plat-O slime tables.

22, 23. 2 @ 12-ft. Allen cones. Overflow is hydraulic water for (14).

24. 2 @ 10-ft. Allen cones.

25. 2 @ 10×4-ft. Dorrco filters.

26. Steam-coil drier.

27. 21 @ 8-pole Wetherill separators arranged to make 5 products.

28. Titanium middling.

29. 4 @ 10-ft. Allen cones.

30. 4 Hydroseal pumps.

FIG. 159. NATIONAL LEAD CO., Titanium Division.

Summary. Three-stage crushing from steam-shovel size to 3/4-in. and one-stage closed-circuit (screen) rod milling to 16-m. Concentration on the primary stream only; magnetic separation for magnetite and tabling for ilmenite, with circulation of gravity middling through the grinding circuit.

46. TUNGSTEN

Uses. More than 99% of all tungsten mined goes into the manufacture of ferroalloys and tungsten steels. Tungsten is an essential element of high-speed tool steels, which are indispensable in present-day manufacturing. The carbide is extremely hard, and tough enough so that it is invaluable to tip cutting tools, face dies, etc. Other uses for the metal are for magnet steel, alloys with aluminum, copper, zinc, nickel, cobalt, molybdenum, chromium, manganese, vanadium, titanium, and other metals, radio and lamp filaments, electrical apparatus, X-ray tubes, needles for sound reproduction, and as a catalyzer in production of ammonia from atmospheric nitrogen. Tungsten salts are used for fire-proofing cloth, as mordants in dyeing, and for coloring glass and porcelain.

Ores. The economic minerals are scheelite, hübnerite, ferberite, and wolframite. Deposits are usually placers or fissure veins; less commonly in pegmatites and contact-metamorphic zones. The usual gangue minerals are quartz, fluorite, cassiterite, tourmaline, mica, etc., occasionally sulphides. The country rock is commonly granite, less frequently quartzite, limestone, and metamorphic rocks.

Production. World production of tungsten concentrate (60% WO_3) is given in Table 114.

Table 114. World production of tungsten ores (metric tons of 60% WO_3 concentrates) (*MI*)

	1913	1918	1919	1921	1929	1932	1936	1937	1938
China *a*	.....	10,200	6,000	3,500	9,978	2,249	7,638	17,895	13,387
Burma	1,732	4,800	3,800	970	1,460	2,226	5,382	5,924	3,410
Portugal	800	1,300	834	265	358	272	1,414	2,069	2,812
United States	1,397	4,573	845	nil	753	359	2,370	3,175	2,761
Bolivia *a*	564	3,700	2,160	174	1,630	686	1,741	1,802	2,530
Japanese Empire	297	1,700	850	24	300	84	1,910	2,100	2,000
Argentina	539	625	204	56	63	6	702	1,063	1,090
Australasia	752	1,550	1,204	71	266	59	475	894	1,000
Fed. Malay States	.....	362	550	300	351	378	1,712	955	667
Others *b*	1,308	3,662	2,392	800	908	481	1,517	2,084	2,831
Total	9,775	32,000	20,000	5,600	16,000	6,800	24,900	38,000	37,000

a Exports.

b Includes Mexico, Peru, Great Britain, Spain, Sweden, Fed. Malay States, Indo-China, Siam, Africa.

Selling. See Art. 50. PRICES of tungsten in concentrates (60% WO_3), per short-ton unit of WO_3: 1929, $13.13; 1932, $9.20; 1937, $19.50; 1938, $17.31; 1942, $24.00.

Treatment. Tungsten concentrate for steel making should contain upward of 60% WO_3 and less than 0.5% each of Sn, Cu, As, P, and S. This requirement translates into 75 to 80% tungsten mineral in concentrate and substantially complete elimination of cassiterite, sulphides and the like, and apatite. Much lower grades are acceptable for chemical manufacture (material with as little as 3% WO_3 can be treated), but prices per unit of tungstic acid fall with the added tolerance, and freight and penalties are normally prohibitive if the WO_3 content is less than 10%.

The specific gravities of the tungsten minerals, ranging from 5.4 to 6.1 for scheelite to 7.5 for ferberite, make gravity separation from rocky gangues highly efficient in the sand sizes. But when the tungsten mineral is finely disseminated, losses in gravity treatment are high because the tungsten minerals are brittle and friable and slime badly in fine crushing and grinding. Better recoveries, but with lower grades of concentrate, can be made by flotation, using either anionic or cationic collectors. The iron-bearing tungstates (ferberite and wolframite), which are the ones likely to be present with Sn, Cu, and As minerals, are sufficiently permeable to permit magnetic separation.

The typical basic flowsheet, where tungsten is the principal value, comprises graded crushing, screening, and classification to produce a number of closely graded products, and concentration of these on jigs and tables. Middling is recrushed or lightly ground and returned to the primary stream. Shaking tables are preferable to buddles or strakes for slimes because of the higher grade of concentrate that can be made on them. Gravity tailing may be scavenged by flotation. Methods of grading up gravity concentrate depend upon the impurities present. Sulphides are usually floated with sulphydric collectors; residual S and As are removed by roasting; iron may be removed from roasted concentrate magnetically or by leaching. Tin is separable from wolframite either before or after roasting by removal of the wolframite on high-intensity magnets, but separation of tin from scheelite cannot be made by this means. Prices of concentrate may be sufficiently high in the United States and Canada to permit treatment of ores containing as little as 0.1% WO_3.

Placer tungsten represents residuals from relatively deep weathering *in situ* with little working over by streams. Placers have been the most important sources of tungsten in the past, especially those at Kiang Si and Kwantung in China. Treatment has been largely hand operation, with picking of coarse lump, hand jigging of gravel, and repeated planills reconcentration of fines. Fig. 160 shows the flowsheet of a modern placer-ore mill at ATOLIA.

Atolia Mining Co.; placer mill, Fig. 160; **lode-ore mill,** Fig. 163 (*IC 6532*).

Location: Atolia, near Mohave, Calif.

Ore: PLACER: Scheelite in coarse detritus from disintegrated tungsten-bearing quartz monzonite. LODE: Relatively coarse scheelite crystals with some apatite, pyrite, and magnetite in quartz veins in quartz monzonite.

Capacity: PLACER MILL, 800 tons per 24 hr.; LODE-ORE MILL, 150 tons per 24 hr.

Assays: Placer concentrate: 62% WO_3, 0.010% P, S negligible. Lode concentrate: 66.6% WO_3, 0.16% S, 0.034% P, 0.007% As, trace Cu. Tailing about 1 lb. scheelite per ton.

Recovery: Placer ore: 70%.

Ratio of concentration: Placer ore, 1,369 : 1; lode ore, 400 : 1.
Water: Pumped 7 mi. from a well against a head of 650 ft.; CONSUMPTION, placer mill, 1.25 tons per ton milled; lode mill, 1.25 tons per ton milled.
Power: Purchased at about 2¢ per kw-hr. Comes 4 mi. at 2,200 volts. Motors 440- and 220-volt. CONSUMPTION, milling only: placer mill, 3.1 kw-hr. per ton milled; lode mill, 9.3 kw-hr. per ton.
Labor: Placer mill: 28.4 tons per man-shift for power-shovel mining, trucking, and milling; lode mill, 13.6 tons per man-shift for milling only.
Mill building: Placer mill: Level site. Total floor area, 1,600 sq. ft. = 2 sq. ft. per 24-hr. ton.
Distances: Placer mine to mill, 1,000 ft.
Tailing disposal: Deslimed and dewatered by a drag belt; sands stacked by conveyor; slimes pumped to settling ponds, and clear water reclaimed.
Costs: Placer mill (1930), $0.27 per ton milled; lode mill (1929), $0.84 per ton milled.

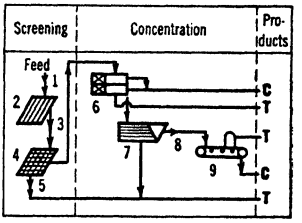

Legend for Fig. 160:
1. 1 @ 1-ton shovel; 1 @ 7 3/4- and 1 @ 5 1/2-ton truck.
2. 1 @ 6-in. grizzly; oversize sledged through.
3. Bin; belt conveyor.
4. Swing-hammer type screen disintegrator. Screen is 4×8-ft. cylinder, tire-mounted and driven, with 5/8-in. steel-plate shell perforated with 2-in. round holes. Hammers are 3×3×6-in. manganese steel chain-mounted on a 3 7/16-in. shaft which makes 50 r.p.m. counter to the screen revolution.
5. 1 @ 400-ton bin; belt conveyor; bucket elevator; tripper belt; 1 @ 250-ton bin; belt feeders.
6. 4 @ 25×34-in. 2-compartment Harz-type jigs, 0.03-in. screens, 10-in. bed thickness, 150 @ 5/8-in. s.p.m. Bed concentrate hand-skimmed every one or two shifts, comprises 85% of total concentrate and assays 60% WO_3 and 0.010% P; hutch product is about 25% of jig feed.
7. 1 Overstrom table (1 in reserve); middling recirculated on table; concentrate assay, 73% WO_3.
8. Wood-fired drying oven.
9. 1 @ 4-pole Wetherill magnetic separator; magnets wound for 30,000 and 60,000 ampere-turns; 1.5-amp. current on first magnet and 6-amp. current on second at 120 volts.

FIG. 160. ATOLIA MINING CO., placer mill.

Lode tungsten ores are usually more or less complex; the simple ones normally contain small amounts of pyrite and apatite in addition to the normal siliceous gangue; the complex ores, which are probably the more common, contain additionally heavy-metal sulphides and arsenic-antimony-bismuth compounds, frequently also cassiterite, which may be present in sufficient quantity to constitute the primary value. The ROUND VALLEY, WOLF TONGUE, ATOLIA lode-ore, and SILVER DYKE mills illustrate typical treatments of simple ores; the NEVADA-MASSACHUSETTS and IMA plants treat complex feeds. The MAWCHI mill, Fig. 157, is essentially a tin-tungsten operation. The BOLIVIAN ores constitute a variety of complex types.

Round Valley Tungsten Co. Fig. 161 (*6852 IC 25*).

Location: Bishop, Calif.
Ore: Coarse scheelite with garnet, epidote, and quartz.
Capacity: 120 tons per 24 hr.
Assays: Feed, 0.5% WO_3.
Power: 12.7 hp-hr. per ton milled.
Labor: 13.6 tons milled per man-shift.
Costs (1931): Crushing, $0.082 per ton milled; grinding, 0.245; tabling, 0.107; drying and sacking, 0.203; miscellaneous, 0.220; total, $0.857.

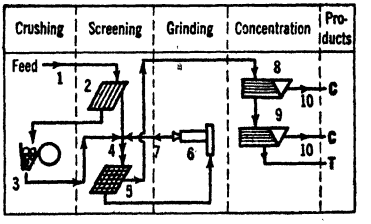

Legend for Fig. 161:
1. Bin.
2. Bar grizzly, 40° slope, 1-in. spacing.
3. 1 @ 10×16-in. Blake-type jaw crusher, 1-in. open set.
4. Belt conveyor; 225-ton bin with rack-and-pinion gate and 24-in. apron feeder.
5. Vibrating screen, 12-m. aperture; undersize contains about 14% <150-m.
6. 1 @ 4×5-ft. grate-type ball mill, 3/16-in. grate openings, ball load 3 1/2 tons 5-in. chrome-steel (consumption, 0.9 lb. per ton); feed pulp maintained at 6 of water to 1 of ore, and a large circulating load built up to minimize sliming.
7. Belt-bucket elevator.
8. 1 @ 5×18-ft. Overstrom table; makes about 90% of total recovery.
9. 2 as (8).
10. Drained, dried, and sacked by hand.

FIG. 161. ROUND VALLEY TUNGSTEN CO.

Summary. One stage of crushing and one stage of wet grinding in closed circuit with a 12-m. screen; tabling in two stages without cleaning or recirculation.

Wolf Tongue Mining Co. Fig. 162 (W. O. Vanderburg, *IC 6685*).

Location: Nederland, Colo.

Ore: Ferberite in quartz. Ferberite is heavy (sp. gr. 7.5) but slimes badly.

Capacity: About 1 t.p.h. on feeds containing about 4% WO_3 to 1/2 t.p.h. on 10% feeds.

Assays: Feed, about 5.5% WO_3; rich concentrate, 55% WO_3; poor concentrate 30 to 32% WO_3; tailing, about 1% WO_3.

Recovery: 85 to 87%. About 70% in rich concentrate. About 73% made on jigs.

Ratio of concentration: 9.7 : 1.

Water: CONSUMPTION, 6 tons per ton ore, net.

Power: Hp-hr. per ton of ore: crushing, 11.5; grinding, 7.2; conveying and screening, 5.8; jigging, 3.6; tabling, 7.6; total, 35.7.

Labor: 1.85 tons per man-shift.

Costs (1931): Crushing and grinding, $0.428; screening and conveying, 0.630; jigging, 0.803; tabling, 0.519.

Legend for Fig. 162:

1. By auto truck over platform scales to bins.
2. Inclined bar grizzly, 3/4-in. spaces.
3. 7×10-in. Blake crusher, 3/4-in. open setting.
4. Belt-bucket elevator.
5. 3×6 1/2-ft. trommel, 1/2-in. sq. aperture; slope, 2 i.p.f., 15 r.p.m.
6. 36×16-in. rolls.
7. Vezin sampler, storage bins, belt conveyor, mill-feed bin, pan feeder.
8. Trommel, 1/4-in. aperture.
9. No. 3 Universal jaw crusher, set about 1/4 in.
10. Trommel, 1/4-in. aperture.
11. Trommel, 1/8-in. aperture.
12. 1 @ 16 1/2×30-in. 1-compartment Harz bull jig, 3/8-in. screen, 5 1/2-in. bed, 250 @ 3/4-in. s.p.m.
13. 1 @ 16 1/2×30-in. 2-compartment Harz jig, 6-m. screen, 4 1/2-in. bed, 250 @ 1/2-in. s.p.m.
14. Dewatering box.
15. 1 @ 16 1/2×30-in. 3-compartment Harz jig, 10-m. screen, 4 1/2-in. bed, 250 @ 1/2-in. s.p.m.
16. Two grades of concentrate made, *viz.:* 50 to 60% WO_3 and 30 to 40% WO_3. Concentrate discharge is by hand skimming, with a general clean-up at the end of each shift.
17. 14 × 27-in. rolls.
18. 1 @ 3×12-ft. Akins classifier.
19. 1 @ 20-m. screen.
20. 1 @ 40-m. screen.
21. 1 @ 80-m. screen.
22. 1 @ 6×14-in. Richards jig, 6-m. cloth, 5 1/2-in. bed, making hutch conc. only.
23. 50 to 60% WO_3.
24. 1 Wilfley table.
25. Deslimer.
26. Two concentrates, 50 to 70 and 30 to 40% WO_3.
27. 1 Akins classifier.
28. 1 small Marcy ball mill, 2,000 lb. 1 to 4-in. balls, 36 r.p.m.
29. 1 @ 20×8-ft. thickener. Lime added to accelerate thickening.
30. 3 Deister-Overstrom slime tables.
31. Cone.
32. 3 @ 4×18-ft. canvas tables. Slope adjustable from 1/2 to 2 i.p.f. according to pulp density. Primarily pilots.
33. Impounded for future treatment.
34. Composite about 1% WO_3.

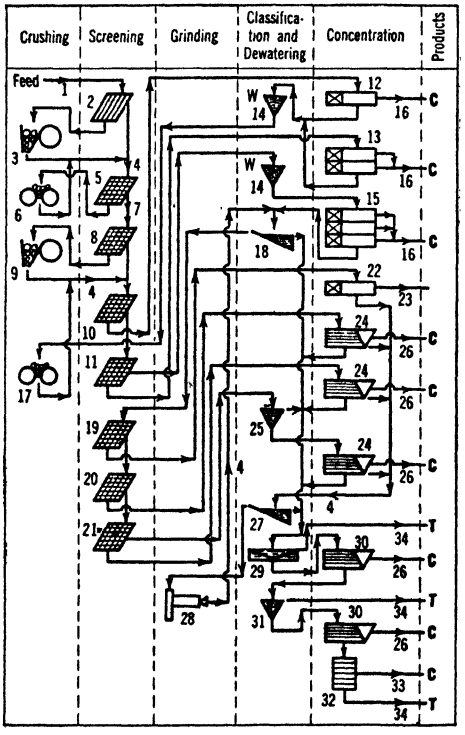

FIG. 162. WOLF TONGUE MINING CO.

Summary. Crushing from 6-in. to about 3/8-in. in 4 stages, with removal of undersize at each stage and the final stage closed on a screen and bull jig. Sizing to 8 grades. Separate

concentration of sized grades on jigs and tables. Middling reground, admixed with original slimes, and reconcentrated in two table stages followed by canvas tables.

Flotation tests indicated that a concentrate of 50% WO_3 grade could be made on crude ore with a recovery of 77% but that mill slime when raised to the same grade would lose about 50% of the values. Reagents used were sodium oleate and oleic acid, pine oil and NaOH in the rougher, sodium silicate in the first cleaner, and H_2SO_4 in subsequent cleanings.

Atolia lode mill. Fig. 163 (see p. 244).

Legend for Fig. 163:

1 Shaft bin.

2. 2 1/2-ft. diam. revolving-disk grizzly, 3-in. spacing.

3. Sorting belt.

4. Bin.

5. 1 @ 10×16-in. Blake-type jaw crusher, 2-in. open setting.

6. Conveyor; elevator.

7. Vibrating screen, 1/8-in. aperture.

8. 1 @ 3-ft. cone crusher.

9. Conveyor; bin; reciprocating feeder, bucket elevator; operating time of crushing plant, 16 hr. per day.

10. 1 @ 2×5-ft. stationary screen, 0.0425-in. aperture.

11. 1 @ 2-compartment fixed-sieve jig, 17 1/2×27-in. @ 14-mesh screens; products are cup concentrate, tailing, and a hutch middling. Concentrate assays 65% WO_3, 0.02% S, 0.025% P.

12. 2 Overstrom tables; middling recirculated on tables by pump. About 90% of total scheelite recovery is made here. Concentrate assays 40% WO_3, 8% S (in pyrite), and 0.15% P (in apatite); there is also some magnetite.

13. Drying.

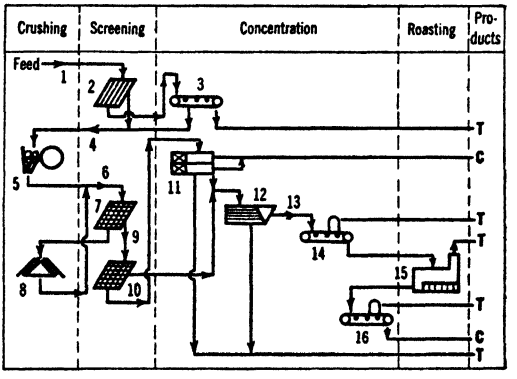

14. Wetherill magnetic separator to remove magnetite.

15. 1 @ 3(diam.)×6-ft. 8-hearth Herreshaff roasting furnace, fired and fed to make pyrite magnetic; apatite decrepitates and about 75% of it passes off as furnace dust.

16. Same machine as (14). Concentrate assays 67% WO_3, 0.5% S, 0.08% P.

FIG. 163. ATOLIA MINING CO., lode-ore mill.

Summary. Two-stage crushing to 1/8-in. Jigging 1/8-in.~14-m. and tabling <14-m. Table concentrate cleaned on magnetic separator to remove magnetite, then roasted and retreated on the magnet to remove pyrite.

Silver Dyke Mining Co. (W. O. Vanderburg, *IC 6604*).

Location: Mineral County, Nev.
Ore: Scheelite, pyrite (coarsely crystalline), alabandite, quartz, monzonite.
Assays: Final concentrate, 65 to 70% WO_3.
Recovery: About 80%.
Cost at 25 t.p.d., $2.40 per ton (1931).

Summary. Crushing in 4 stages (2 jaw, 2 rolls) to <12-m. Oversize and undersize of 22-m. tabled separately. Middling reground and recirculated. Concentrate dried, roasted lightly to render pyrite magnetic, and cleaned on a Dings magnet.

Flotation tests using sodium carbonate, oleic acid, sodium oleate, and pine oil indicated upward of 90% recovery with 60 to 65% WO_3 concentrate.

Nevada-Massachusetts Co., Inc. Fig. 164 (*IC 6280; IC 6852*).

Location: Mill City, Nev.
Ore: Scheelite rather finely disseminated in a gangue of quartz, epidote, garnet, calcite, and pyrite.
Capacity: 140 tons per 24 hr.
Assays: Feed: 0.9% WO_3; concentrate, 70 to 75% WO_3, <0.05% Cu, <0.75% S, <0.05% P, <0.035% each of As, Sb, Bi; may carry 4 to 6 oz. Ag per ton and a trace Au.
Water from neighboring wells and reclaimed from concentrate and tailing.
Labor: 9.4 tons per man-shift total.
Power: 20 hp-hr. per ton milled.
Costs (1934): $1.25 per ton milled; labor comprises 47%.

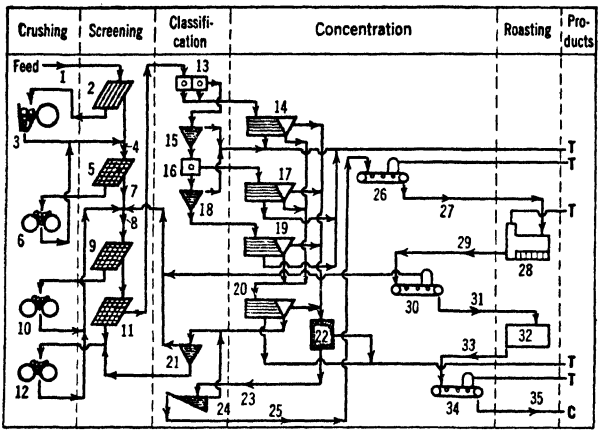

Legend for Fig. 164:

1. R.o.m. through 8-in. mine grizzly; 2 flat-bottom bins, 500-ton combined capacity; 8 @24 × 30-in. rack-and-pinion gates; 1 @ 24-in. variable-speed apron conveyor.

2. Grizzly, 1 1/2-in. spacing.

3. 1 @ 9 × 16-in. roll-jaw crusher (manganese steel wearing plate lost about 60 days).

4. 1 @ 24-in. belt conveyor; belt-bucket elevator.

5. Trommel, 9/16-in. rd. holes.

6. 1 @ 36 × 15-in. rolls, 63 r.p.m.

7. 1 @ 12-in. belt conveyor; hand-propelled tripper; 2 @ 200-ton cylindrical redwood-stave bins; 2 Hammil ore feeders; 1 @ 12-in. conveyor belt.

8. Belt-bucket elevator (water added).

9. Trommel, 1/8 × 1/4-in. Ton-Cap screen.

10. 1 @ 36 × 16-in. rolls, set 1/4-in., 95 r.p.m.

11. 1 @ 24-in. Callow traveling-belt screen, 14-m. phosphor-bronze cloth.

12. 2 @ 36 × 16-in. rolls set close, 100 r.p.m.

13. 2 @ 1-spigot hydraulic classifiers in series; spigot products go separately to table distributors.

14. 2 Wilfley and 4 Deister-Overstrom tables on spigot product from first classifier (13) and 2 Wilfley and 3 Deister-Overstrom tables on product from second classifier (13).

15. 3 @ 8-ft. Callow cones.

16. Deslimer, spigot product to (17).

17. 2 Wilfley tables.

18. 1 @ 8-ft. Callow cone.

19. 1 Deister-Overstrom table.

20. 1 as (19).

21. 1 @ 4-ft. Callow cone.

22. 1 @ 2-cell Kraut flotation machine to remove to finer sulphides, predominantly pyrite and molybdenite.

23. Belt-bucket elevator.

24. Small Akins classifier.

25. Oil-fired rotary drier; belt-bucket elevator.

26. 1 @ 6-pole Wetherill magnetic separator; garnet must be largely rejected here as otherwise it agglomerates with other material in roasting.

27. Belt-bucket elevator; belt conveyor.

28. Rotary oil-fired roasting kiln for magnetic roast for pyrite.

29. Steel-screw conveyor with light water spray.

30. 1 as (26); the roasted magnetic pyrite is sufficiently porous to make gravity separation from scheelite possible.

31. Belt-bucket elevator; steel-screw conveyor.

32. Externally fired roaster for dead roast to drive off S and As.

33. Screw conveyor; belt-bucket elevator.

34. Type M-2 Dings magnetic separator.

35. Bucket elevator; sacking hopper.

FIG. 164. NEVADA-MASSACHUSETTS CO.

Summary. Four-stage crushing to 14-m. Discard of primary slime. Classification and tabling of sand to make rough concentrate. Sulphides roughed out by flotation. Magnetite removed by magnetic separation of dry concentrate. Residual pyrite removed after magnetic roast.

Ima Mines Corp. Fig. 165 (*IC 7230*).

Location: Patterson, Idaho.

Ore: Hübnerite, argentiferous tetrahedrite, scheelite, galena, sphalerite, chalcopyrite, and molybdenite in quartz, with minor quantities of fluorite, rhodochrosite, muscovite, and pyrite.

Capacity: 120 tons per 24 hr.

Assays: Feed: Ag, 1.85 oz. per ton; Cu, 0.2%; Pb, 0.25%; Zn, 0.2%; S, 2.1%; WO_3, 0.52%; MoS_2, 0.1%; tungsten concentrate, 66 to 67% WO_3; silver concentrate: 45 oz. Ag, 3.8% Cu, 7% Pb, 29.2% Fe, 4.8% Zn, 37.6% S, 9% insol.; tailing: 0.07 to 0.1% WO_3, 0.2 to 0.25 oz. Ag; more than 50% of WO_3 in tailing is <800-m.

Recovery: 81.2% WO_3.

Ratio of concentration: 158 : 1.

Power: Diesel and hydroelectric; CONSUMPTION, 29.5 hp-hr. per ton.

Water: From creek on property.

Costs (operating): Labor, 79.5¢; supplies, 34.6¢ (includes 16¢ for flotation reagents); power, 32.6¢; maintenance, 20.4¢.

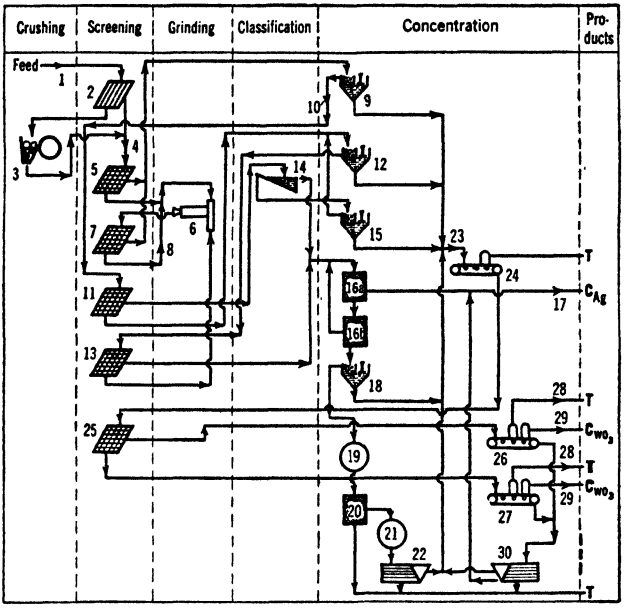

Legend for Fig. 165:

1. 6 or 8-car trains of 16-cu. ft. cars; 3-car surge bin with rail-grizzly cover (8-in. spacing); oversize sledged through.

2. Grizzly bottom of surge bin (1), 35° slope, 1 1/2-in. spacing.

3. 1 @ 9×15-in. Blake-type jaw crusher, 1 1/2-in. open setting.

4. Bucket elevator; 100-ton bin; adjustable-stroke (Massco) feeder.

5. 1 @ 3×5-ft. Hum-mer screen, 3 1/2-m. cloth.

6. 1 @ 6×4 1/2-ft. grate-type ball mill, 26 r.p.m. Pulp density 55 to 60% solids. 6,000 to 7,000 lb. hardened forged-steel balls, 4-in. replacements, 2.2 lb. per ton (6 to 7 lb. with chilled cast iron). Manganese steel liners and grates; consumption: breast, 0.4 lb.; feed end, 0.05 lb.; grates, 0.03 lb. Screen tests of feed and products are given in Table 115.

7. 1 @ 24×36-in. Denver spiral screen, 3 1/2-m. aperture.

8. Bucket elevator.

9. 1 @ 36-in. 1-cell California-type Bendelari jig, 150 @ 5/8-in. s.p.m. Concentrate, 36 to 40% WO_3; most of the pyrite rejected.

10. 2-in. rubber-lined Wilfley pump; life of runner 4 to 6 wk. *vs.* 8 da. for Ni-hard.

11. 2 @ 3×5-ft. Hum-mer screens, 14-m. stainless-steel Ton-Cap (#833).

12. 1 @ 16×24-in. 2-cell Denver jig, 200 @ 1/4-in. s.p.m.; concentrate principally coarse pyrite, 12 to 20% WO_3.

13. 1@3×5-ft. Hum-mer screen, 30-m. stainless-steel Ton-Cap (#433).

14. 1 @ 4×15-ft. rake classifier, slope 3 i.p.f., 28 r.p.m.; overflow, 15% solids.

15. 1 @ 12×18-in. 2-cell Denver jig, 300 @ 3/16-in. s.p.m.

16. 1 @ 8-cell No. 18 Denver Sub-A flotation machine, *a* = cells 1, 2; *b* = balance; feed, 20% solids; isopropyl xanthate, 0.15 lb. per ton, pine oil, 0.10 lb.

17. 1 @ 10-ft. thickener, 1 @ 2-ft. 4-disk filter, lead smelter. Ratio of concentration, 29 : 1.

Table 115. Screen tests on grinding circuit at Ima

Screen, mesh	Ball-mill, new feed, %	Ball-mill, discharge, %	Oversize return, %	Screen undersize, %
3/4	54.3 *a*	.....	.....	.....
1/2	12.2	.....	.....	.....
3/8	12.5	.....	.....	.....
3	10.0	.....	.....	.....
4	6.1	0.4	2.0	.....
6	3.3	2.8	7.3	.....
8	0.5	4.1	12.4	.....
10	0.2	4.6	11.6	.....
14	0.9	5.4	13.7	.....
20	.....	5.6	13.4	.....
28	.....	9.3	13.9	0.6
35	.....	10.5	9.2	8.5
48	.....	9.0	3.9	17.7
65	.....	5.9	0.5	14.1
100	.....	10.0	3.8	25.0
150	.....	5.0	1.0	9.7
200	.....	5.0	1.0	6.5
<200	.....	22.4	6.3	17.9 *b*

a 1 1/2-in. nominal limiting size.

b Mill tailing with this circuit product contains 36.1% <200-m.; with mill in closed circuit with classifier (14), mill tailing was 35-m. limiting and contained 46.0% <200-m.

FIG. 165. IMA MINES CORP.

Legend for Fig. 165—Continued:

18. 2 @ 12×18-in. Denver jigs. About 15% of total recovery made here.
19. 1 @ 6-ft. conditioning tank, 15% solids; 0.25 lb. oleic acid, 0.30 lb. AC 708, 0.05 lb. Emulsol X-1 added as an emulsion.
20. 1 @ 8-cell No. 18 Denver Sub-A machine; concentrate assays 4 to 6% WO_3, balance chiefly fluorite, rhodochrosite and sericite.
21. Conditioner; 0.05 lb. H_2SO_4 added to break down froth.
22. 1 No. 6 Deister-Overstrom table with riffled-rubber deck; concentrate assays 50 to 55% WO_3, tailing 1 to 2% WO_3.
23. Dewatering box, combined concentrate, 20 to 30% WO_3; rotary drier. 1% >8-m., 16% <200-m.
24. Magnetic separator, low intensity; magnetic product is circuit iron and partly roasted pyrite.
25. Vibrating screen, 65-m. aperture.
26. 1 @ 24-in. Dings Type E 2-pole magnetic separator, 32 to 38 amp. Feed rate, 100 to 125 lb. per hr. per ft. of belt width.
27. 1 @ 12-in. Dings Type E 2-pole magnetic separator, 16 to 18 amp. Feed rate about 250 lb. per hr.
28. Rhodochrosite, siderite.
29. 95 to 97% recovery. Sacked in 100-lb. paper-lined canvas.
30. Pilot table. Concentrate about 1% of total WO_3.

Summary. One-stage crushing to 1 1/2-in., and one-stage grinding to 3 1/2-m. Rough concentration by jigging and soap flotation, with sulphides and silver skimmed out by sulphydric flotation ahead of soap flotation. Rough concentrate cleaned by magnetic concentration.

Bolivian mills. In the Bolivian tungsten ores the usual tungsten-bearing mineral is wolframite, although in some it is scheelite. Tungsten content is 2 to 4% WO_3. The usual associates are pyrite; more or less chalcopyrite; considerable bismuth, usually as the oxide; arsenopyrite; sometimes barite; rarely cassiterite; some ores contain gold and silver. Most of the mills are small, many of them worked by hand.

Hand concentration (*143 #6 J 64*) is done by breaking with single jacks to a size permitting crushing by a *quimbalete*. (This is a half cylinder of iron, shod with steel wearing plates, fitted with a two-man handle for rocking, and weighted with stones as desired. It is rocked and twisted on a layer of broken rock spread on a flat, hard surface.) The quimbalete product, usually <1/2- or <3/8-in., is sized by working it over flat screens set over boxes placed stepwise, each with successively finer screen cloth. Undersize is carried along by water and oversize removed by hand. Five or six sizes may be made between 1/2-in. and 1-mm. Final undersize is buddled and the sized products are hand jigged. The coarser jig concentrates are hand picked to remove sulphides and sulpharsenides; fines may be crudely calcined or even floated. Approximately half of the Bolivian tungsten output is thus produced.

Machine plants at the larger mines (*2 #4 FMQ 36*) comprise hand picking of run-of-mine ore, two- or three-stage crushing in jaw crusher and rolls, screening, jigging of coarser sizes with recrushing of middling, tabling of fine sands, and buddle treatment of slimes. Gravity concentrate is variously treated according to the nontungsten content; if sulphides other than pyrite are present, flotation is used to remove the bulk and the remaining concentrate is roasted to drive off the last of the S and As; pyrite is magnetized by roasting and then separated by magnets. Recoveries range from 45 to 74% in concentrates averaging close to 60% WO_3.

47. URANIUM

Uses are practically limited to glass and ceramic industries, in which sodium uranate and the U_3O_8 oxide are the usual vehicles for introducing the element. In glass or in ceramic glazes, uranium produces fluorescence, or yellow, brown, or black coloration, depending on amount and color of the added ingredient (*10 ACerS 813*). As a deoxidizer for steel, ferrouranium proved less suitable (largely because of volatility of uranium) than other and less expensive alloys (*TP 177 USBM*). Uranium has also served as catalyzer in the Haber and other nitrogen-fixation processes. The carbide U_2C_3 is strongly pyrophoric.

Ores. Pitchblende (impure U_3O_8) and carnotite (theoretically $K_2O \cdot 2\ UO_3 \cdot V_2O_5 \cdot 3H_2O$) are the only industrial sources of uranium; for occurrences of the former, see Art. 38; of the latter, Art. 48. Pitchblende concentrates from ELDORADO mines (below) are estimated to yield 800 to 900 lb. of uranium compounds per ton; those from Belgian Congo have carried as high as 60% U_3O_8, and the St. Joachimsthal concentrates are of about the same grade. In Portugal, unconcentrated pitchblende ores with as little as 1% U_3O_8 have been treated chemically for extraction of radium and uranium compounds. Carnotite ores in the Paradox Valley, Colo., as shipped to treatment plants (interested primarily in vanadium), average 2.25% U_3O_8; small pockets running up to 15 to 20% U_3O_8 are sometimes encountered, but considerable tonnages below 2% remain at the mines.

Production. Port Hope radium refinery of ELDORADO GOLD MINES produced as by-product uranium compounds: 160,660 lb. in 1935, 211,860 lb. in 1936, 546,000 lb. in 1937, and about the same amount in 1938; receipts of pitchblende concentrates in 1939 were about double those of 1938. Annual plant capacity is reported as 10,000 tons of uranium

compounds. Exports (U_3O_8 contents) of compounds produced in Belgium from Congo pitchblende have fluctuated from a low of 61,700 lb. in 1932 to a high of 330,500 lb. in 1936; the 1938 exports were 286,000 lb. The U_3O_8 equivalent of compounds made at St. Joachimsthal was 34,800 lb. in 1935; 35,400 lb. in 1936; 24,300 lb. in 1937. Portugal produced compounds containing 23,600 lb. U_3O_8 in 1936. Carnotite ores produced in U. S. were reported to contain 51,700 lb. uranium in 1938; 59,300 lb. in 1939; actual recovery not stated. The world potential resources of uranium considerably exceed present demands.

Prices. At close of 1939, sodium uranate was quoted at $1.75 to $1.80 per lb.; uranium oxide (96% U_2O_6), at $2.65 per lb. for black, $1.75 for yellow.

Treatment. Method of concentrating the pitchblende-silver ore at Eldorado, Canada, is illustrated in Fig. 166. For the decomposition and refining treatment at Port Hope, Ont., leading to the production of radium bromide, see *44 CME 362*. See also *Bul 70 USBM 104*.

Eldorado Gold Mines, Ltd. Fig. 166 (D. A. G. Smith, Mill Supt., *139 \#4 J 35*).

Location: La Bine Point, Great Bear Lake, Northwest Terr., Canada.

Ore: Pitchblende, native silver, and chalcopyrite, with various iron, cobalt, nickel, molybdenum, bismuth, lead, zinc, and manganese minerals in fine-grained siliceous altered sedimentaries and volcanic rocks, highly fractured and sheared.

Capacity: 75 tons per 24 hr.

Assays: Feed (aver. month Jan., 1938), 1.064% U_3O_8 (radium equivalent is calculated on the ratio of 3.4 parts Ra to 10^6 parts U), 26 oz. Ag per ton; concentrate: U_3O_8, 26.7%; Ag, 406 oz.; tailing, 0.25% U_3O_8.

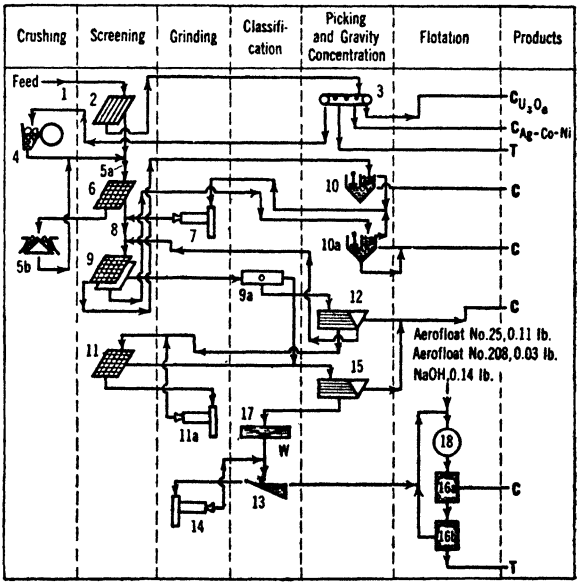

Legend for Fig. 166:

1. Sledged through a flat grizzly of 90-lb. steel rails spaced 10 in.; 1 @ 50-ton ore bin.

2. Grizzly 3/4-in. spacing.

3. 1 @ 12×3-ft. bumping-type sorting table, actuated by an air-driven Parks Pusher.

4. 1 @ 9×15-in. Blake crusher, 3/4-in. set.

5a. 1 @ 14-in. belt conveyor; 1 @ 5×8-in. bucket elevator.

5b. Symons cone crusher.

6. 1 @ 2×4-ft. A-C vibrating screen, 1/2-in. aperture.

7. 1 @ 4×8-ft. A-C rod mill, 12,000 lb. 4-in. high-carbon-steel rods; consumption, 1.75 lb. per ton.

8. 1 @ 75-ton bin with 12-in. H-type wall feeder; 1 @ 7×12-in. bucket elevator.

9. 1 @ 2-deck A-C vibrating screen, 4- and 14-m. cloths.

9a. 1-spigot Richards hydraulic classifier.

10. 2 @ 18×24-in. James jigs, 3/32-in. slotted plate.

10a. 2 @ 18×24-in. James jigs, 0.063-in. opening.

11. 1 @ 48-m. vibrating screen.

11a. Ball mill.

12. 4 @ \#6 Wilfley tables.

13. 1 @ 30-in. Akins classifier.

14. 1 @ 4×6-ft. A-C ball mill, 6,000 lb. drop-forged balls; consumption, 1.3 lb. per ton.

15. 5 Plat-O tables.

16. 1 @ 8-cell No. 15 Denver Sub-A flotation machine.

16a. Cells 1 to 4 of (16).

16b. Cells 5 to 8 of (16).

17. Thickener.

18. Conditioner.

FIG. 166. ELDORADO GOLD MINES.

Recovery: U_3O_8, 73.6%; Ag, 54.6% with flotation, 30% without.

Ratio of concentration: 27.7 : 1.

Water comes from Great Bear Lake, on the shore of which the mill is located.

Power is generated by Diesel engines from fuel costing 35¢ per gal. at the property.

Labor: Wages are $4 to $5 per day, plus board and lodging. With an average annual temperature of 17° F., labor is contracted for one year only, at the end of which time the men are sent outside, so that turnover is near 100% per year.

Transportation and distances: Mill is at mine. Concentrate is shipped by motor 1,400 mi. (with 1 @ 8-mi. and 1 @ 16-mi. portage) to Waterways, thence 300 mi. by railroad to Edmonton, Alberta, and thence 2,300 mi. by rail to the refinery at Port Hope, 60 mi. east of Toronto. Freight rate on concentrate to Waterways (1938) was $40 per ton.

Costs: Sorting $0.30 per ton milled; crushing, 0.44; grinding, 1.38; jigging, 0.16; tabling, 0.27; conveying, 0.49; flotation, 0.49; drying and sacking concentrate, 0.44; total, $3.98, of which power was 35.5% and labor 30.5%.

Summary. Two-stage crushing from 10-in. to 1/2-in.; stage concentration of friable U_3O_8 on jigs and tables with intervening open-circuit rod-mill grind and ball-mill grind in a circuit closed by a screen; tailing reground in a classifier-closed ball-mill circuit and floated for silver.

48. VANADIUM

Uses. Chiefly as an alloying element (alone, or in conjunction with Mo, Cr, etc.) in certain high-grade steels; automotive structural steel usually contains 0.15 to 0.20%; high-speed tool steel, 1 to 2% vanadium. Effects are to raise the yield point and ultimate strength of a suitably heat-treated carbon steel, with notably increased resistance to shock and reversed stresses. Vanadium may be introduced as ferrovanadium (of which the highest grade has 40 to 45% V and max. 0.5% C) or, in electric-furnace steel, as fused V_2O_5 (88 to 90% pure). Vanadium also refines the grain in hard aluminum alloys, such as Al-Ni-Mg. Ammonium vanadate is an excellent catalyst for oxidation reactions, as in the sulphuric acid contact process, and for dehydrogenation in various organic transformations.

Ores. In order of importance, sources of vanadium consumed in U. S. are: (1) patronite ores from Minasragra, Peru; these are indefinite mixtures of vanadium sulphide, sulphur, and asphaltic material; (2) miscellaneous mixed ores, mainly from the Southwest, in which vanadinite (lead chlorovanadate) is the usual vanadium carrier; (3) carnotite (potassium-uranium vanadate) from southwestern Colorado and adjoining parts of Utah. Roscoelite (a vandiferous mica) was formerly the chief domestic source, but the largest deposit, at Rifle, Colo., is now exhausted. The lead-zinc ores at Broken Hill, No. Rhodesia (*44 MM 88*) contain considerable descloizite and vanadinite, which go in part into the zinc concentrate. When this is dissolved for electrolytic treatment the vanadium dissolves and is precipitated as zinc or iron vanadate in purifying the zinc solution by addition of dross, calcine, or milk of lime. The vanadium is thereafter purified. Soots from oil-fired furnaces burning Mexican or Venezuelan petroleums carry noteworthy amounts of vanadium, which also occurs in numerous asphalts and (from 0.05 to 0.1%) in many bituminous coals (*19 EG 552*). Vanadium is often found in titaniferous magnetites, and is extracted from open-hearth and converter slags (reported to carry up to 10% V) at steel works utilizing the Dogger hematite ores of south Germany (containing 0.1% V) or the Lorraine minette ores (0.07% V). In Italy, some vanadium is recovered from the caustic-soda solutions in the Bayer process for purifying bauxite.

Production. World output of vanadium contained in ore concentrates or oxide was 2,963 met. tons in 1939 (2,669 tons in 1938), of which a little over one-third came from Peru (all exported to U. S.) and nearly one-third was produced in U. S.; S. W. Africa and No. Rhodesia were the largest other recorded contributors that year, but Mexico produced 147 tons. Of the domestic output (V contents) in 1939, 206,510 lb. was in oxide produced from carnotite ores, and 1,777, 560 lb. in concentrated vanadium minerals from mixed ores. Peruvian product includes some hand-sorted raw ore (11% V_2O_5) but is mainly a calcine (22% V_2O_5); combined exports in 1939 were 14,477 met. tons containing 1,017 tons V. Rhodesian material, since 1937, has been exclusively the fused oxide (formerly some concentrates); the 1939 output of 674 long tons (containing 855,960 lb. V) was derived from 58,308 long tons of ore averaging 1.41% V_2O_5. Otavi district, S. W. Africa, in the 4 years 1936–1939, exported an annual average of 4,890 long tons of table concentrates of vanadinite and descloizite averaging 19.75% V_2O_5. Mexican product is mainly vanadinite concentrate.

Prices. Nominal quotation (the larger producers also being consumers) on vanadium concentrates in 1939 was 27 1/2¢ per lb. of V_2O_5 content. On dried or fused oxide, $1.10 per lb. V_2O_5. On ferrovanadium, $2.70 to $2.90 per lb. V.

Treatment. At Minasragra, Peru, higher-grade ores are hand-sorted, a picked product at about 11% V_2O_5 being shipped. Rejects from hand-sorting, and lower-grade mine ores, are crushed to 1/4-in. and calcined, yielding an ash carrying about 22% V_2O_5, for shipment. Final electric-furnace reduction to ferrovanadium is conducted at Bridgeville, Pa. Vanadium ores of the Paradox Valley district, Colorado, consist of soft sandstone with shaly layers impregnated with a considerable variety of vanadium-uranium minerals, chiefly carnotite. Carbonaceous matter frequently accompanies the ores, which occur always in scattered pockets. Ore is hand-sorted at the mines, that containing less than 2% V_2O_5

seldom being shipped unless close to the reduction works. Because of the excessive friability of carnotite, mechanical concentration has not proved feasible, owing to losses in slime. Treatment comprises roasting of the crushed ore with NaCl and Na_2Co_3, leaching with water to dissolve Na_3VO_4, neutralization with H_2SO_4, and heating to precipitate V_2O_5. The alkaline solution of vanadium may be neutralized with $FeSO_4$, yielding a mixture of V_2O_5 and $Fe(OH)_2$. For concentration of descloizite ores at Broken Hill, Rhodesia, see Fig. 167. Chemical extraction of the Rhodesian concentrates and some of the coarser tailings (all being reduced to <200-m.) is described at *136 J 489*.

Rhodesia Broken Hill Development Co. Fig. 167 (*136 J 489*).

Location: Broken Hill, No. Rhodesia, So. Africa.

Ore: Brecciated and decomposed material resembling sandy clay; vanadium mineral is chiefly descloizite with some vanadinite and occasionally troublesome amounts of zinc silicates. For geological details, see *36 MM 177; 42 MM 47*.

Assays: Average ore to mill, 3% V_2O_5. Table concentrate, 16.5%. Mixed slime concentrate and finishing-table tailing (to leaching plant), 8.5%.

Legend for Fig. 167:

1. 1 @ 6-ft. × 22-in. Hardinge ball mill, 22% solids.
2. 6 Wilfley tables.
3. Two-spigot spitzlutte.
4. 6 Wilfley tables.
5. Dewatering cone. Spigot product 10% V_2O_5.
6. Wilfley table.
7. Dewatering cone.
8. As (66).
9. 1 @ 27-ft. Dorr thickener.
10. 4 James slime tables.
11. 2 as (10).
12. Hardinge ball mill, to <200-m.
13. 16.5% V_2O_5.
14. 8.5% V_2O_5.

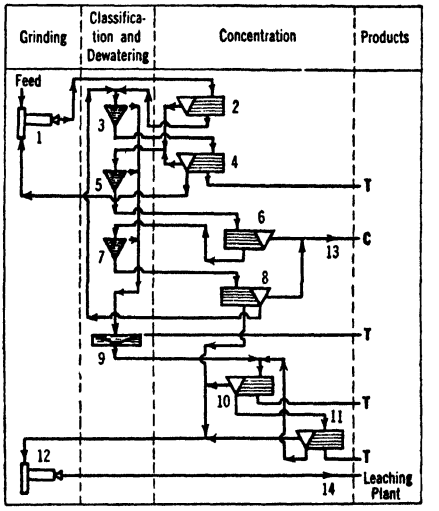

FIG. 167. RHODESIA BROKEN HILL DEVELOPMENT CO.

Summary. Ball-milling to table size; rough concentrate cleaned on tables; rough tailing classified and retabled at graduated sizes; middlings recirculated, but only coarsest recrushed. Since a large part of final recovery is to be made by leaching, the chief purpose of this mill is to eliminate low-grade tailing. Fig. 167 shows the plan as operating in 1935; after 1937, production of concentrate for shipment was discontinued, the entire output of vanadium thereafter being extracted by leaching and reduced to fused oxide.

49. ZIRCONIUM

Uses. Chiefly as degassifier, scavenger, and desulphidizer of high-grade carbon steels, in all three of which functions it has certain advantages over other elements used for the same purposes; it is said to add nothing as an alloying constituent. It may be introduced either as zirconium-ferrosilicon (9 to 12% Zr) or as silicon-zirconium (35 to 40% Zr, 6 to 10% Fe); both alloys are electric-furnace products. Alloys of zirconium with Ni, Co, Al, and Mg have found uses in nonferrous metallurgy. Zirconium oxide, natural or artificial, has exceptional refractory power, both as to temperature and reagents; it is formed into brick, plastic cement, and various laboratory utensils. The oxide is considered superior to that of tin in production of enamels for steel vessels, and when added to glass it affords exceptional toughness and heat resistance. Powdered zirconium has some advantages over magnesium in flash-light mixtures.

Ores. Two industrial minerals are (*a*) baddeleyite (ZrO_2) from massive deposits in the Caldas region, States of São Paulo and Minas Geraes, Brazil; ZIRKITE is an indefinite mixture of this mineral with zircon; as shipped, baddeleyite averages about 97%, whereas zirkite ranges from 70 to 90% ZrO_2. (*b*) Zircon ($ZrO_2 \cdot SiO_2$) is a common constituent of

alluvial and beach sands, often associated with ilmenite, rutile, and monazite, in the productive districts, of which the more important are the shores of Brazil between Rio de Janeiro and Balvia, particularly near Victoria, where the cleaned product (mainly monazite) carries 21% zircon; the shores of Travancore, southern India, centering at Quilon and Colachel, where zircon is a by-product in recovery of ilmenite and monazite; large shipments of Indian zircon have averaged 66.8% ZrO_2, 31.5% SiO_2, 0.84% TiO_2, 0.08% Fe, 0.07% P_2O_5; the eastern shore of New South Wales, immediately south of Byron Bay, where beds of black sand with maximum dimensions 3 to 4 ft. in thickness, 80 ft. in width, and a mile in length, may contain 45 to 75% zircon, 10 to 30% rutile, 10 to 20% ilmenite; garnet, cassiterite, and monazite are accessories (*31 CEMR 216*). A somewhat similar deposit was worked in 1922–1928 (mainly for ilmenite) for 11 miles along Pablo Beach, north of St. Augustine, Fla.; zircon constituted about 20% of the concentrated products. Some zircon was recovered in 1937 from sluice boxes on the KAUFIELD dredge, Lincoln, Calif.

Production. World output of zirconium ores fluctuates widely, but totaled 8,900 long tons in 1937, of which New South Wales contributed more than half; India and Brazil are the only other important producers. In 1937, U. S. imported 8,000 long tons, of which 6,658 tons came from Australia and the rest about equally from India and Brazil; 1938 imports fell to less than one-fourth those of 1937. Annual imports of zirconium ferroalloys (all from Norway) averaged 111 long tons in 1937–1938.

Prices, 1938–1939, were steady at $55 per short ton of ore with 55% ZrO_2, f.o.b. Atlantic ports. Powdered Zr metal, $7 per lb.; Fe-Si-Zr alloys (12 to 15% Zr), $97.50 to $102.50 per long ton; (35 to 40% Zr) 14 to 16¢ per lb.

Treatment. In Brazil, some of the interior deposits consist of lumps of zirkite embedded in clay from which, after sun-drying, they are separated on coarse screens; the beach sands are separated magnetically into ilmenite, zircon, and monazite. At Quilon, India, the black sands, occurring both on the beach and (under dune sand) for some distance inland, are first screened and dried; magnetic separators with comparatively weak fields then remove most of the ilmenite, residues being treated on both wet and dry shaking tables for rough separation of zircon, rutile, garnet, and monazite. Products are finished by magnetic and electrostatic machines, zircon being the nonmagnetic discard from a Wetherill. At Byron Bay, N. S. W., zircon is separated from an ilmenite-rutile mixture by flotation, yielding a product 99.1% pure zircon (ZrO_2, 66.4%). Table 116 gives screen analyses of the several regular products from this operation. On Pablo Beach, Fla., the sand, averaging about 20% heavy minerals, was first passed over 18 Deister-Overstrom tables, yielding a mixed concentrate comprising 55% ilmenite, 20% zircon, 6% rutile, 2% monazite, 14% staurolite and epidote, and 3% quartz. After the sand was dried a magnetic separator lifted a clean ilmenite concentrate; residue was separated by Huff electrostatic machines into additional ilmenite, iron silicates, monazite, and a rutile-zircon product which, after further cleaning on a wet table, was subdivided electrostatically, rutile being a better conductor than zircon.

Table 116. Size analyses of finished beach-sand products, Byron Bay, N. S. W.

British, std. mesh	Garnet	Rutile	Ilmenite	Zircon	Monazite	Cassiterite
>60	11	.....	.....	.....	.....	.....
60 to 80	54	Tr.	Tr.	1	.....	.....
80 to 100	35	22	25	18	.....	.....
100 to 120	.....	6	17	11	.....	.....
120 to 150	.....	62	48	56	.....	.....
150 to 200	.....	9	9	13	93	75
<200	.....	Tr.	Tr.	Tr.	7	25
Sp. gr....	3.70	4.24	4.56	4.66	5.07	6.74

50. SELLING METALLIC ORES AND CONCENTRATES

Revised by

Paul M. Tyler

The great majority of mining companies sell the ore or concentrate that they produce to processors who finish the extraction of the metal. This is particularly true of the commoner metals other than gold, aluminum, and iron. Gold is often recovered at the company milling plant in bullion form salable directly to the mint (p. 262). Aluminum and iron ores are usually carried to manufactured metal by the mine owner, although the mining, smelting, and manufacturing companies are ordinarily separate corporate entities, and a long haul may intervene between mine and smelter. Similar integration is found in the cases of copper, lead, and zinc, but much less frequently. The normal situation with these latter metals, however, as also with the precious metals, with tin, and with the iron-alloy metals, is for the miner to concentrate the ore into a smaller bulk of such composition as gives

maximum monetary yield when the buying schedule, freight, tailing loss, and milling cost are taken into account collectively.

The usual buyers are smelters and custom mills. When markets are glutted or unsettled both kinds of buyers may refuse to purchase, but treat the product at an agreed per-ton charge, either on a consignment to sell when, as, and if possible, or with return of product to the miner, who must then find his own market.

Custom mills are built to treat a composite of the ores in the district which they serve. The district is usually small in area, because freight quickly eats up all possible profit on shipments of raw ore, despite that tariffs are normally lower for low-grade ores. Recoveries tend to be lower in custom mills than in company mills, owing to changing character of feed, even when elaborate facilities for mixing feeds are available; this difficulty is, of course, accentuated when ores are run through individually. Many smelters maintain custom mills.

Milling charges depend upon the kind of ore, the size and frequency of shipment, the extent of segregation required, whether the ore is purchased by the milling plant, whether the mill is at a smelter, the number of unusual conditions in the transaction, and the extent of competition. Most custom mills are for treatment of gold- and silver-bearing ores; the following OPEN SCHEDULE is characteristic of the type of tender by such mills in the western U. S. to ordinary sellers; better terms can be obtained by large and regular shippers:

Flat charge (1938) covering sampling, assaying and milling, when segregation is not required:

Value per ton, $.....	<8	8 to 10	10 to 15	15 to 20	20 to 40	>40
Charge per ton, $.....	2.50	3	4	4.50	5.50	6

Small lots (<10-ton) must pay an additional $5 sampling charge; if the lot is less than carload, add $2.50; if sacked, add 10¢ per ton; if frozen, add 10¢ per ton; if wet (>10% H_2O), add 5¢ per ton per 1% excess. Resampling of <10-ton lots costs $5; larger lots more but not in proportion; such resampling must be demanded promptly. Check and umpire assays must be paid for by shipper.

Settlement is made for gold, silver, and sulphide lead only.

Gold scale is:

Oz. per ton..	<0.02	0.02 to 0.5	0.05 to 5	5 to 10		>10		
$ per oz. *d*..	0	32.26	32.76	32.76 *a*	33.12 *b*	32.76 *a*	33.12 *c*	33.47 *b*

a First 5 oz.
b Balance.
c Second 5 oz.
d Deduct $1 per oz. for truck shipments or lots <10-ton.

Silver scale is:

Oz. per ton.....	<1	1 to 5	5 to 10	10 to 20	20 to 50	50 to 100	>100
Per cent. paid for.....	0	50	65	75	85	90	95

Payment is at market of day preceding settlement (excluding fractions of a cent and with a deduction of 2.5¢ per oz. for excess over 100 oz.) except as price is modified by political manipulation.

Lead: Sulphide lead only is paid for, and then only when in crude ore and in excess of 3%; settlement is at 80% of wet assay less 1%; price is New York quotation for the day preceding settlement date less 2.5¢ per lb.

Limitations: Ores containing >3% of copper or zinc or >0.2% oxidized Cu not accepted. Payment of freight by shipper must be assured to the satisfaction of buyer.

Smelters have a more difficult problem in the purchase of base-metal ores with or without a precious-metal content; consequently their schedules of charges and methods of payment are more complicated than those of custom mills. The smelter buys ores on the basis of the agreed assay, paying for valuable metals contained therein at prices current in principal metal-market centers, either at date of purchase or at some agreed date thereafter meant to be the probable date of sale, less a charge covering the cost of treatment and profit thereon. The treatment charge must include the cost of delivering ore to the smelter, sampling, smelting, freight on crude metal to the refinery, refining, selling, and a carrying charge on metal from the time of purchase to the time of disposal. Various methods of assessing these charges and the profit on operations are followed. In the case of some metals all is included in a treatment charge; in other cases a part only, namely, smelting, is included in the base treatment charge, the balance being taken care of in the price at which metal is paid for after certain deductions from the market price. All methods have as the fundamental basis of charge the cost of the items above enumerated.

A comprehensive form of estimate sheet used by a smelter as a basis for contract (*Ed. 3 Peele 32–09*) is shown in Table 117. Used in connection with prices quoted in published schedules, it constitutes a valuable check list for the seller to use for his own estimates.

Table 117. Form for smelter estimate (After Walker, *Peele*)

Marginal calculation for	Contract No.	Plant	193—
Owner	Location		
Class of ore	Est monthly shipment	Tons	
Basis of cost used that of 193—	Shipping station		

Au	Ag	Pb fire	Pb wet	Cu wet	Insol.	SiO_2	Fe	Mn	CaO	Al_2O_3	Zn	S	As	Sb	Ni	Bi

Quotations		Deductions			Payments		
Date		Base charge			Gold: oz @ $		
Au	per oz						
Ag	per oz						
Pb	per 100 lb				Silver: oz @		
Pb (London)	per 2 240 lb						
		Insol					
		Zn					
U S equiv	per 100 lb	S					
Frt & ins	" " "	As			Lead:		
N Y parity	" " "	Sb					
		Ni					
Cu W B	per lb	Bi					
Cathode	"	Bricking					
					Copper:		
Sterling exchange		Freight charged shipper					
Mexican "		Switching " "					
		Taxes " "					
R & D deductions used							
Au	per oz						
Ag	"				Total		
Pb	per lb				Less deductions		
Cu	"				Net amount paid per dry ton (2 000 lb)		
		Total deductions					

Treatment cost per dry ton (2 000 lb)		Value per dry ton (2 000 lb) (R & D deducted)		
Freight paid, if for plant account		Gold: oz @ per oz		
Switching " " " " "				
Fgt. on moisture " " "		Silver: oz @ per oz		
Roasting:				
Sintering:				
Sulphur:		Lead, domestic:		
Bricking:				
		Lead, foreign:		
Smelting:				
Converting: lb Cu @				
		Copper, domestic:		
Flux: Silica				
Iron				
Lime		Copper, foreign:		
Zinc				
		Total value		
Impurities:		Less amount paid for ore (above)		
		Smelter margin		
Metal loss:				
Gold		Less net cost of treatment		
Silver		Smelter outcome		
Lead				
Copper		Depreciation		
Interest % @ days		General administration		
Net cost of treatment		Net outcome		

Table 118. Schedules for gold-silver ores at lead smelters; 1936 (After Gardner, *Peele*)

Plant	Payments												
	Gold [1]			Silver [2]			Lead [3]			Copper [4]			Iron and lime
	Minimum paid for, oz per ton	Payments		Minimum paid for, oz per ton	Minimum deductions, oz per ton	Percent paid for	Deductions		Percent of quotation after deduction	Deductions		Percent of quotation after deduction	
		Classes of ore, oz. per ton	Rate per ounce				Units	Cts per lb		Lb per ton	Cts per lb		
El Paso	0.03	All	$32.81825	.....	0.5	95 [5]	1.5	1.425	90 [6]	8	5.025	95 [7]	
Murray	.02	All	31.81825	1.0	0.5	95	1.5	1.5	90 [6]	15	5.5	100	Iron [10] Lime [11]
East Helena [12]	.03	0.03 to 3 3 to 5 5 to 10 Over 10	31.81825 32.31825 32.6743 33.0304	.....	1.0	95	1.5	1.5	90 [6]	20	6.0	100 [14]	Iron [15]
Selby [16]	.03	Under 5 5 to 15 Over 15	31.81663 32.31663 32.81663	1.0	1.0	95	.....	.....	0	.....	.....	0	
Selby [18]	.03	Under 5 5 to 15 Over 15	31.81663 32.31663 32.81663	1.0	1.0	95	.....	.....	0	.....	.....	0	
Leadville [20]	.03	0 to 1 Over 1	31.81825 32.31825	.....	1.0	95	1.5	0	90	20	6.5	100	Iron [21]
Leadville [22]	.03	0 to 1 Over 1	31.81825 32.31825	.....	1.0	95	1.5	1.5	100 [23]	20	6.5	100 [24]	Iron [25] Lime [26]
Leadville [29]	.03	0 to 1 Over 1	31.81825 32.31825	.....	1.0	95	1.5	1.5	90	20	6.5	100	
Midvale	.02	0 to 5 Over 5	31.81825 [30]	1.0	0.5	95	1.5	1.5	90 [31]	15 [32]	5.5	90	Iron [33]
Kellogg, Idaho [36]	.05	Under 5 5 to 10 Over 10	31.81825 32.17431 32.53037	1.0	.....	95 [37]	1.25	0	90 [6]	20	8.0	100 [38]	
Kellogg, Idaho [41]	.05	Under 5 5 to 10 Over 10	31.81825 32.17431 32.53037	1.0	.....	95 [37]	.....	.....	0	20	8.0	100 [38]	

Table 118. Schedules for gold-silver ores at lead smelters; 1936 (After Gardner, *Peele*)—*Continued*

	Treatment charge			Penalties														
				Insoluble		Zinc		Arsenic (As) Antimony (Sb) Tin (Sn)			Bismuth		Sulphur			Moisture		
	Gross values	Base per ton	Maximum	Units free	Charge per unit	Units free	Penalty per unit for excess	Element or combination	Units free	Penalty per unit for excess	Units free	Penalty per pound for excess	Units free	Penalty per unit for excess	Maximum penalty	Units free	Penalty per unit for excess	Maximum penalty
El Paso	0 to $25 Over $25	$3.70[8]	$6.70	0	$0.05	5	$0.30	As Sb+Sn	2 1	$0.50 1.50	[9]	$0.50	2	$0.20	$2.00	...	0	
Murray	[12]	2.50	.....	0	0.10	6	0.30	As+Sb	2	0.50	...	0	2	0.25	2.50	...	0	
East Helena [13]	0 to $30 30 " 40 Over 40	6.00 5.50 5.00	6.00	...	0	5	0.30	As Sb	2 1	0.50 2.00	[9]	0.50	...	0	.....	...	0	
Selby [16]	All	6.00	6.00	[17]	0	...	0	As+Sb +Sn	1	0.50	0	0.50	...	0	.....	...	0	
Selby [18]	0 to $35 Over 35	6.50[19]	10.00	...	0	...	0	As+Sb +Sn	1	0.50	0	0.50	...	0	.....	...	0	
Leadville [20]	All	6.00	6.00	...	0	5	0.50	As+Sb +Sn	0.5	1.00	0.05	0.50	...	0	.....	10	$0.05	0
Leadville [22]	0 to $ 8 8 " 10 10 " 50	4.00 [27] [28]	.....	0	0.05	8	0.30	As+Sb +Sn	0.5	1.00	0.05	0.50	1	0.25	2.50	10	0.05	0
Leadville [29]	All	8.50	8.50	...	0	8	0.30	As+Sb +Sn	0.5	1.00	0.05	0.50	...	0	.....	10	0.05	0
Midvale	[34]	2.50	.....	0	0.10	6	0.30	.....	...	0	[35]	.....	2	0.25	2.50	...	0	
Kellogg [36]	[39]	12.00	.....	...	0	5	0.30	As+Sb	0	1.00	0	2.50	4	0.25[40]	2.00	6	0.20	$2.00
Kellogg [41]	0 to $20 [42]	6.50	9.00	...	0	5	0.30	As+Sb	0	1.00	0	2.50	4	0.25	2.00	6	0.20	2.00

Notes on page 259.

Footnotes for Table 118:

[1] Payments on gold are based on new mint price of $35 per oz (net $34.9125)
[2] Payments on silver are based on new mint price for new American-mined ore at 64.64¢ per oz
[3] Payments on lead are based on N Y quotation for common desilverized lead
[4] Payments on copper are based on the *Eng & Min Jour* quotations
[5] Less a deduction of 1 1/2¢ per oz
[6] Nothing paid for lead less than 5% wet assay
[7] Nothing paid for copper less than 1/2%
[8] Add 10% to base charge for excess value over $25 per ton
[9] 0.1% of wet-lead assay is free
[10] Pay for all at 6¢ per unit
[11] Pay for all at 5¢ per unit, if 5% or over
[12] Add 10¢ to base charge for each unit of lead under 30% and deduct 10¢ for each unit over 30%
[13] Siliceous ore schedule for ores and concentrates having excess of iron are identical, except that treatment charge is a flat $5 per ton
[14] Nothing paid for copper less than 1%
[15] No credit
[16] Schedule for gold concentrates
[17] Add 10¢ per ton per unit of iron short of 25 units excess over insoluble
[18] Schedule for crude siliceous gold ore
[19] Add 10% to base charge for excess value over $35 per ton
[20] 1934 schedule for irony ores and concentrates applies only to ores and concentrates containing 20% or more of iron excess over insoluble
[21] Excess over insoluble, all at 10¢ per unit, not to exceed $3 per ton
[22] Crude-ore open schedule
[23] When lead is over 9¢ per lb, deduct 25% of excess
[24] When copper is over 15¢ per lb, deduct 25% of excess
[25] Pay for iron plus manganese at 5¢ per unit, but credit is not to exceed charge for insoluble
[26] All at 8¢ per unit, if 10% or over
[27] Add 25% of gross value to base treatment charge, when value is between $8 and $10
[28] Add 10% of gross value to base charge, when value is between $10 and $50
[29] 1934 siliceous-ore special for ores with 50% excess insoluble
[30] On direct smelting ores containing over 5 oz gold per ton, price per oz for the excess will be left to mutual agreement between buyer and shipper
[31] No payment for lead under 3% dry assay
[32] Minimum deduction
[33] All at 6¢ per unit
[34] Based on 30% dry lead assay. Debit 10¢ for each unit under 30% and credit 10¢ for each unit above 30%
[35] Midvale smelter reserves right to reject any shipment containing more than 0.1% bismuth
[36] Lead ore open schedule
[37] Ore over 35 oz per ton, deduct 2¢ per oz
[38] No payment for copper under 1%, or when quotation is 8¢ per lb or less
[39] Based on 50% lead. Add 10¢ per unit when over 50%, and deduct 10¢ per unit when under 50%
[40] Penalty applies only to ore under 20% lead: no penalty for ore of 20% or over
[41] Siliceous-ore open schedule: ores containing no lead, or under 5% for which no payment is made (lead determined by wet method less deduction of 1 1/4 units)
[42] Between $20 and $35, $7 per ton; from $35 to $50, $7.50; from $50 to $75, $8; from $75 to $100, $8.50; over $100, $9 per ton

Smelter Schedules

Smelter open schedules are published tenders by the smelter to purchase or treat ores and concentrates under stated conditions as to price and other items. The elements are (*a*) the treatment charge; (*b*) penalties; (*c*) payments.

Treatment charge is the proper and apparent core of all open schedules. It covers labor, fuel, supplies; interest on invested and operating capital; charges for obsolescence, depreciation, insurance, and taxes; plant supervision; office work (including ever-increasing and expensive reports to the Government—*Ed.*); selling, management, and, politics permitting, some profit. Actual cost of treatment is generally less than $5 per ton at lead smelters and $3 at copper smelters. Published base treatment charges are usually definitely higher than these figures, and graduated upward for low-grade materials. Typical charges at lead smelters (1936) as compiled by Gardner (*IC 6926*) are shown in Table 118. At copper smelters the charge is $2.50 to $6 per ton on products of gross value below $100, and $8 to $15 for gross value above $100 (*Ed. S Psels 32-14*). Zinc smelters base differently; schedules do not ordinarily state a treatment charge.

Penalties are imposed for ore constituents which add to the difficulties and costs of smelting. They are normally graduated according to the content of unwanted material or the deficiency of desired material.

It is necessary in lead and copper smelting that the slag be sufficiently fluid to allow the metal or matte to settle out freely, and to permit easy discharge of slag. To obtain the desired fluidity the slag must have a particular (Fe : Ca : SiO_2) ratio. The basic smelter charge is founded upon the cost of smelting a charge of such composition as will produce the desired slag. If the ore to be treated will not

do this, it is necessary to make up any deficiency. In districts where the majority of the ores sent to the smelter are siliceous, iron or lime, or both, must be added. In order to cover the cost of addition of such substances, a penalty is imposed for silica present in the ore bought. If, on the other hand, the prevailing ores of the district are calcitic or ferruginous, silica must be added and iron and lime are penalized to make up the cost of such addition. When silica is penalized, iron and lime are usually granted a corresponding bonus, and *vice versa*.

Penalties and bonuses are quoted at so much per unit. A UNIT is 1% or 20 lb. per ton (22.4 lb. per long ton). SILICA PENALTY normally ranges from 5 to 15¢ per unit for all excess over a stated amount, which should be that required for a self-fluxing charge; IRON BONUS ranges from 5 to 10¢ per unit in excess. A bonus is not ordinarily paid for lime, but should be, especially when silica is penalized, since one part of iron or lime ordinarily fluxes one part of silica. When siliceous ores are wanted at a smelter a flat rate may be made for their treatment in place of allowing a bonus for silica. In this case the charge usually increases with the grade of ore, as is the case at custom mills, and for the same reason. Table 119 shows such a schedule.

Table 119. Flat schedule for siliceous ores in Colorado district (1914)

Value of ore per ton	Charge per ton for treatment	Value of ore per ton	Charge per ton for treatment
$14 and less...	$5.00	$35 to $40.....	$8.00
14 to 20.....	6.00	40 to 45.....	8.50
20 to 25.....	6.50	45 to 50.....	9.00
25 to 30.....	7.00	50 and more..	10.00
30 to 35.....	7.50		

In lead smelting, the formation of any considerable amount of matte is undesirable and consequently it is necessary to roast sulphide ores prior to their introduction into the smelting furnace. For this reason sulphur, being a source of expense to the smelter, must be paid for by the ore seller and is usually charged in the form of a penalty for sulphur. The usual contract penalizes SULPHUR in excess of 2 or 3%, ordinarily at a rate of 15 to 25¢ per unit. Sulphur is not penalized in copper smelting, since here it is desirable. ZINC, in lead and copper ores, causes slag to be thick and viscous, thus increasing metal losses therein and lowering furnace capacity. It also causes fumes that foul the furnace walls, and, by volatilization, causes losses of other metals. For this reason, zinc above a certain amount is frequently penalized. For zinc penalties in lead ores see Table 118. For copper ores there is no zinc penalty at many smelters; some impose the 30¢ penalty for excesses above 6 units. ARSENIC is decidedly undesirable in lead smelting and for that reason all over 1% is commonly penalized; ANTIMONY and TIN are also objectionable; the penalty for these three elements combined may run as high as $1 per unit for the excess over 0.5%. BISMUTH hardens lead and discolors white-lead pigments made from bismuth-bearing pig. It is, therefore, penalized heavily (Table 118) and may cause refusal to accept. Penalties for these four elements are less frequently imposed in copper smelting; when penalties are imposed they are about the same as is lead smelting. IRON is highly undesirable in zinc smelting; more than 10% makes the ore substantially unfit for treatment. The penalty for iron is normally imposed by setting a certain price for zinc ore of a given zinc content and penalizing it so much per unit for each unit below standard. In such cases a corresponding bonus is ordinarily given for each unit of zinc above standard.

Crude gold or silver ores shipped to smelters are typically siliceous; concentrates, on the other hand, generally contain an excess of iron. Ores that contain too little lead or copper to serve as collectors of the precious metals in smelting are termed DRY ORES. Highly siliceous ores (60% upward of SiO_2) are valued by copper smelters for use in converters, whereas they are highly penalized by lead smelters. In certain districts, however, siliceous ores are smelted on a flat schedule designed to encourage mining and maintain a flow of ore to the smelter. In Leadville, Colo., the treatment charges per ton are scaled from $5 for such ores worth $14 or less a ton to $10 for ores worth $50 or more per ton.

Payments for a given metal differ materially according to the kind of smelter buying, and, of course, to the character of material shipped. Thus a lead smelter may pay about 4¢ per pound less for copper in a given ore or concentrate than a copper smelter, but the latter will pay for only half the lead at 2¢ less per pound.

Example (after Lamb, *Tref Bul. DECO 3713-B*). A complex sulphide ore assaying 0.45 oz. Au, 9.6 oz. Ag, 6.7% Cu, 3.4% Pb, 5.1% Zn, 18.5% Fe, and 38.4% insoluble can be handled in at least four ways as shown in Table 120.

Payments by the smelter are rarely, if ever, based on the full amount of a given metal in the product shipped, as shown by assay, nor on the full market value of the metal at the time of settlement. The first difference is supposed to take care of losses in treatment. The second deduction is to cover freight on base bullion and the cost of refining it, the cost of recovery of by-products, selling, and it serves also as a hedge on the course of the market between settlement date and sale. Payment deductions and penalties are, in most cases, the sources of smelter profits. Lack of change over long periods would normally be taken as a sign that the advantages accruing from technological improvement were not being divided with the shipper voluntarily, and that there was a considerable cushion for bargaining. However, the fact that deductions have remained substantially the same over the last 20 years in a competitive field, despite reductions in operating costs that have occurred

in the face of rise in wages and union slow-downs, reflects the increasing costs of political impositions [*Ed.*]. Some concessions are available to large shippers who are in a position to bargain, but in general both producers and consumers must suffer.

Losses include metal in slags, either as shot or combined, volatilization and dusting, spill, and refinery losses. Walker (*Ed. 1, Peele*) gives the following metal losses in smelting and refining: lead 4 to 15%, depending upon the grade of ore and its refractoriness; the lower limit is for a charge carrying about 40% lead; the higher, for one carrying 10 to 12%. Copper loss sometimes reaches 30% in lead smelting. In smelting copper ore the loss varies with the percentage of copper, but is always much less than the loss of lead in lead smelting. Silver loss is normally not over 2 to 5%. Gold loss is generally inconsiderable. Fulton (*TP 83 USBM*) quotes actual losses as follows: In LEAD SMELTING: lead, 5 to 20% of contents, the low figure on a high-lead charge, 30 to 35% Pb or upward, and containing but a small amount of roasted material; the higher, on a charge containing less than 10% Pb or a large amount of roasted material. Normal loss with a charge containing 10 to 15% Pb is 8 to 11%. Copper, 1 1/2 to 4 lb. per ton of charge. Silver, 1.5% loss to 1.75% gain. The gain is, of course, apparent only, and follows from the bookkeeping practice of charging the smelter with a silver only in those ores containing more than a certain minimum amount. Gold, 0.3% loss to 4.5% gain. The same explanation applies to the apparent gain. In COPPER SMELTING: copper, 3 to 11 lb. per ton of ore smelted or 5 to 15% on the copper present, the higher figure on the lower grade ore. Silver, 0.5 to 10% of contents. Gold, 1.5% loss to 4% gain. Barbour (*92 J 314*) states that the usual zinc loss in zinc smelting is about 12.5%.

Table 120. Effect of treatment and marketing on returns from a complex ore

Treatment and product	Tons shipped	Sold to	Net return per ton *a*	
			As shipped	Based on crude ore
No treatment:				
Crude ore.....	1.0	Lead smelter	$14.10	$14.10
Crude ore.....	1.0	Copper smelter	20.05	20.05
Bulk concentration:				
Concentrate.....	0.589	Copper smelter	42.35	24.95
Amalgamation and selective flotation:				
Bullion *b*.....	.....	Mint	.....	8.98
Cu concentrate *c*..	0.214	Copper smelter	57.10	12.20
Pb concentrate *d*..	0.065	Lead smelter	122.60	7.97
Zn concentrate *e*..	0.054	Zinc smelter	30.70	1.65
Total.....	0.333			$30.80

a Less hauling, freight, and treatment charges. Market prices: Au, $35 per oz.; Ag, $0.7757 per oz.; Cu, $0.12 per lb.; Pb, $0.06 per lb.; and Zn, $0.06 per lb.

b 0.24 oz. Au and 0.78 oz. Ag per ton crude ore.

c 0.3 oz. Au; 14.4 oz. Ag; 27.8% Cu; 1.3% Pb; 2.5% Zn; 29.1% Fe; 2.9% insol.

d 1.6 oz. Au; 61.9 oz. Ag; 5.0% Cu; 44.8% Pb; 3.1% Zn; 3.0% Fe; 8% insol.

e 0.12 oz. Au; 4.4 oz. Ag; 0.5% Cu; 0.2% Pb; 63.2% Zn; 1.1% Fe; 2.0% insol.

Lead losses are sometimes taken care of, wholly or in part, by basing payment for lead on a fire assay. This practice is based on the assumption that fire assaying is smelting on a small scale and recovers the same amount of lead that will be recovered in the furnace. The fire assay for lead runs about 0.5 to 1% below the wet assay unless such metals as zinc, copper, antimony, bismuth, or arsenic are present, in which case fire assay may run high. To cover this contingency some contracts call for wet analysis of the button obtained by fire assay and base lead payment on the assay thus obtained. Common practice at present is to make a wet analysis and deduct therefrom 1 to 1.5%, calling this DRY ASSAY OR FIRE ASSAY and using the latter as basis for settlement. On the basis of a 10% loss of lead in smelting, a 1.5% deduction from the wet assay more than covers the loss on ores carrying less than 15% lead but does not cover with higher-grade ores. However, the loss on higher-grade ores is a smaller percentage of the total lead present and it is probable, therefore, that a deduction of 1.5% from the wet assay more than covers loss in all cases of gold lead-smelting practice. Lead losses are further taken care of by paying for less than the whole amount of lead determined by either method of assay as, for instance, by paying for 90% of the lead determined by dry assay. Further, the deduction from the market price is oftentimes made greater than the cost of freight on crude metal, refining, and selling, in order to further insure the smelter against losses.

Copper losses are similarly taken care of, although the use of the dry assay is less common than with lead. DRY COPPER means from 0.75 to 1.5% less than the wet assay.

Gold and silver losses are provided for by deducting up to 5% of the assay value for gold and 5 to 10% for silver, or by paying less than the full price for all of the metal present, or both.

Freight on crude metal, refining, and selling. The costs (1926) of these various operations, according to Walker (*Peele*), were: For refining lead, $8 to $12 per ton of bullion; for converting copper matte, about $20 per ton of blister copper produced; for refining copper, $15 to $23 per ton of bullion. The usual deduction in copper contracts is 2.5 to 3¢ per lb. from the New York quotation for electrolytic copper. Similarly from 1 to 1 1/2¢ per lb. is deducted from the lead price.

Gold payments, formerly based on $20.67 per oz., have been based since 1933 on the realized mint price of $34.9125 per oz. ($35 less $0.0875 refining charge). Both lead and copper smelters usually pay for all Au over about 0.03 oz. per ton; the minimum ranges from 0.02 to 0.05; some contracts deduct the minimum from the settlement assay. The price commonly varies according to the Au assay (see Table 118).

Silver payments have generally been based in North America on the New York (Handy and Harman) quotations for the week during which the last car of the lot arrives at the smelter, but under the Silver Purchase Act domestically mined silver (accompanied by the necessary affidavits) is paid for on the basis of the realized mint price. Smelters usually deduct 1 oz. (sometimes only 0.5 oz.) per ton from the assay and pay for 95% of the balance, sometimes making an additional deduction on nondomestic ores from the market price.

Zinc and antimony smelters often make no payment for Ag or Au and those that do, deduct heavily because their losses in recovering precious metals are higher than those of copper or lead smelters.

Native placer gold and bullion from amalgamation or cyanidation plants can be deposited at the United States Assay Offices in New York and Seattle or at the mints at Philadelphia, San Francisco, Denver, and New Orleans and will be paid for usually within 3 to 5 days at the market price of these metals less specified refining charges, provided the gold, or gold and silver content is 20% or more. Silver, free from gold, will not, necessarily, be accepted unless needed for coinage or under some special provisions (*e.g.*, the Silver Purchase Act). No allowance is made for platinum or base metals contained in bullion.

Lead. Galena concentrates in the Tri-State district are sold by the ton to local smelter buyers at a competitive price, with adjustment to cover assay, and variations from the normal 80%-Pb base product. Western lead-smelter contracts show considerable variety in lead payments. Some pay at specified prices per unit, which are raised if the New York price rises above a stated minimum; the unit prices also increase on a sliding scale with the Pb content. Another form pays for 90% of the fire assay at 90% of the New York price, or at a deduction of 1¢ to 1 3/4¢ per lb. from New York quotations for common desilverized metal. Actually few analyses are made by fire assay, but lead smelters nearly always deduct 1 to 1.5% from the wet assay in figuring the Pb content. Less than 5% of Pb is rarely paid for, but a bonus of perhaps 15¢ per unit is sometimes allowed for Pb under 5%. Copper smelters, as previously noted, pay usually for only 50% of the lead (wet assay) and deduct as much as 50% from the price. See also the various summaries in Table 118.

Copper. Payments for Cu are usually on fire assay, or on wet assay less 1 to 1.5%, and are generally based on *Engineering and Mining Journal* quotations for electrolytic cathodes averaged for the week, less a deduction of 2.5 to 3¢ per lb.

A Midvale contract, for example, deducts 15 lb. per ton and pays for the balance at 3.0¢ less than New York price, plus a further deduction of 10%; base treatment charge is $5.00 per ton, scaling upward to $7.00 on ores worth $30 or more per ton. Zn over 6% is penalized at 30¢ per unit of excess. Sb and As combined: 2% free; excess penalized at 50¢ per unit.

Zinc. Middle West zinc ores are usually bought outright by smelters or their representatives on a base price for 60% sulphide or 30% carbonate ore with adjustment (usually $1 a unit) for assay variations above and below this base. Penalties may be charged for Fe, CaO, or other undesirable elements.

A Western zinc plant (*Tref DECO 3713-B*) pays for 82% of the Zn content at the St. Louis price for Prime Western less 0.275¢ per lb., with further deduction if Zn content is under 45%. Au, Ag, Cu, and Pb are paid for on the basis of 65% of content, with usual deductions from market prices. Base treatment charge is $19 a ton plus or minus $3 a ton for each 1¢ change in market price of slab zinc over or under 4¢.

Moisture. Most mineral products are purchased on a dry basis. Freight is charged on gross wet weight at time of shipment. Ore and concentrate shipped in open cars may lose or gain moisture in transit, and, since moisture samples are taken by the buyer as soon as possible after weighing at the receiving point, shippers have no means of protesting moisture assays of the buyer unless their own representative is present at the time the moisture sample is taken. Smelters often make minimum deduction of 1% for moisture, even if ore happens to be almost dry, to cover dusting losses. Occasionally wet ores (>6 to 10% moisture) are penalized because they hang up in bins and freeze in cold weather. Table concentrates and filtered flotation concentrates usually carry 8 to 15% moisture; they should be dried to 5% or less before shipping any considerable distance.

Sampling. For discussion of methods see Sec. 19. Moisture samples should be taken as soon as possible after the ore is weighed in, especially if in open cars; wetting after

weighing in and before sampling results in a charge against the lot as weighed of too much moisture and thus operates against the shipper. Sampling for chemical analysis should yield four final pulp samples of about 2 lb. each; one for the smelter laboratory, one for the shipper, one for umpire, and one as an emergency reserve for either of the three. Splitting limits between mine and smelter assays are given in Sec. 19, Art. 7. When umpiring is resorted to, the umpire's result is usually taken when it lies between the disputed results. The disputed result nearest the umpire's is taken when the umpire's result lies outside the disputed results. Analysis should determine not only the valuable metals but also constituents such as iron, lime, silica, magnesia, alumina, and sulphur, upon which the common bonuses and penalties are based, and also any other substances that are specified in special instances. Analyses to determine these constituents should be just as carefully made as those for the valuable metals, as the penalty or bonus may make an important difference in the value of the ore. Silica should be determined by fusion rather than as "insoluble," as the latter is almost invariably high, as much as 15 to 20% with ores of high insoluble content and frequently 4 to 6% (*TP 83 USBM*). It is sometimes insisted also that iron and lime be determined by fusion. Ores that must be roasted and therefore crushed fine are usually sampled by machine, but those that are to be smelted in a blast furnace directly, such as oxide ores, are commonly sampled manually. The cost of sampling varies with the kind of ore and the method; it should rarely exceed $1.00 per ton and averages near $0.50 per ton with wages for common labor at $4.00 per day. On shipments less than 10 tons a sampling charge, usually $5, is made; on larger shipments the sampling cost is absorbed in other charges. The shipper or his representative should be present to watch the sampling and receive the sample. Smaller shippers may agree with the seller upon an umpire to represent both parties either in the sampling or assaying or both. Absence of seller or his representative when sampling is done is usually deemed a waiver of right to protest sampling, and seller's failure to make or submit an analysis may cause buyer's assay to govern.

Buyer's weights or railroad weights are usually accepted, depending upon the contract.

Metallics. Settlements for ores that yield appreciable amounts of metallics (gold and silver too coarse to pass the screen used in preparing pulp) are notoriously open to disputes. Metallics cannot be split equally between four pulp samples, hence there is no opportunity for check assay. Moreover, the loss in handling even a few particles of gold makes an appreciable difference in calculated value per ton and neither buyer nor seller is likely to be satisfied by the results. Usually it is to the advantage of all concerned to take out coarse gold or silver and sell it as bullion to the mint.

Dust losses and spillage. Ores and (more especially) fine concentrates that are too dry are likely to show loss in transit from dusting. The finer the concentrate the more water should be left in to avoid such losses. Rich concentrate should be packed in double sacks, although many smelters make a handling charge of 50¢ per ton for ore shipped in sacks. Cloth sacks are returnable to shipper. Powdered minerals are packed in paper bags or other containers. If concentrates or other fine material is shipped in bulk, in boxcars or trucks, care must be taken to cover all cracks in floors or sides; lining with heavy paper is usually advisable. Shipments in trucks should always be covered and tailboards should be securely fastened.

Freight and trucking. Trucking may be cheaper than rail transport for small lots and short distances, because minimum carloads are defined as 20 to 50 tons, depending upon the railroad and the ore, and rates for less than carload lots are high. Average costs per ton where trucks are kept busy, loaded from chutes, and dumped into car or bin without shoveling, in gold-mining districts of Arizona and California, as given by Gardner (*6891 IC 40*) ranged from 35¢ for under 1 mile, 12¢ for 2 to 5 miles, and 5¢ for 20 to 100 miles in 1935. Commodity rates usually are established by railroads when regular shipments are to be made. On Western roads the average base rate is about 1¢ per ton-mile, though large tonnages of low-grade ore move for as low as 0.5¢, whereas on branch roads 2¢ or more may be charged. Freight rates on high-grade ore are generally higher than on low-grade. Values are based upon ore as shipped; dry ton values should not be applied to freight bills because railroad freight has to be paid on the moisture too.

Small shippers seldom can obtain as favorable a rate from the railroads as can the traffic manager for a larger shipper or for large buyers. Partly for this reason and also because small shippers are often short of cash, freight charges are ordinarily paid by the smelter or consumer, the amount being deducted from the returns credited to the mine. Owing to the difficulty of recovering the freight on worthless material shipped by irresponsible or ignorant miners, many buyers are reluctant to accept shipments from sources not previously known to them.

Value of an ore. Assayers and chemists sometimes report not only the metal contents found in an ore but, as a carryover from the days when gold and silver were commonly

reported in dollars, multiply the contents by market prices to indicate the "value" of the ore. Such figures are, of course, ridiculously wrong. The only way to determine the value of an ore to a seller is to calculate it from a smelter schedule with allowances for all smelter deductions and freight charges.

Ore shipped from Butte in the early days yielded no profit to the shipper if it carried less than $130 worth of Cu (at 19¢) and $50 in gold and silver. It had to go by bull team and rail all the way to Baltimore; smelter charges were high because of the As content. This is an extreme case but even today the actual value of a high-grade silver ore at the smelter may not be over 70% of its theoretical value; for low-grade ores the percentage may be much less. Low (*58 CMJ 556*) cites several modern examples, of which the following is typical: A copper ore assaying 1.08% Cu, 0.003 oz. Au, and 0.116 oz. Ag yielded 3.2 tons concentrate (dry) assaying 27.63% Cu, 0.06 oz. Au, and 2.45 oz. Ag, representing recoveries of 88.4% Cu, 61.2% Au, and 68.2% Ag. Smelting terms were: Cu assay less 1.3 units, at the dollar equivalent of London copper price (15¢) less 2¢; 98% of gold at $35 per oz.; 95% of Ag at quotation less 1.5¢; treatment charge, $5 per ton; freight, $1 per ton. Returns per ton were: Cu, $68.46; Au, $2.06; Ag, $1.01; less $6 charges; total, $65.53, corresponding to $2.10 per ton of ore. Gross calculated value was $3.39 per ton. A lead-zinc ore assaying 10.9% Pb, 14.7% Zn, and 2.08 oz. Ag, with a calculated gross value of $27.99, showed a return of $12.00 per ton. A pyritic copper ore assaying 3.71% Cu and receiving a credit of 20¢ per ton of ore for pyrite yielded $9.25 per ton against a gross, based on copper only, of $11.13. On a 46-ton shipment of high-grade gold-silver ore from MONTANA SILVER QUEEN MINING Co. (*PC*) to the East Helena smelter the net proceeds were $14,645.54, while the calculated gross was $19,081.65.

Iron

Roughly 80 to 85% of United States iron production is from the Lake Superior district and Lake Superior prices tend, therefore, to control country-wide except when a seller's market permits other districts to utilize freight differentials in local areas.

Lake Superior ore is sold at base prices, f.o.b. Lake Erie docks, for 51.5% natural iron assay, with adjustments up or down from the base according to iron contents, and further adjustment in the case of Bessemer ore for phosphorus. Base prices are set each spring, four prices serving as bases for five different ores, comprising three different kinds, *viz.*, Bessemer or low-phosphorus; non-Bessemer or intermediate-phosphorus; and high-phosphorus. ADJUSTMENT FOR IRON CONTENT is at a price per unit obtained by adding 60¢ to the base price for the class of ore and dividing the sum by 51.5. Thus with a $5.10 base (per long ton) for 1938, the adjustment price was ($5.10 + 0.60)/51.5 = $0.11068 per unit. This unit price multiplied by the percentage excess natural-iron assay over 51.5% is added for iron contents above 51.5%, and deducted for deficits down to and including 50%. The deduction from 50% to 49% is 1.5 times the unit; for assays below 49% the deduction per unit is twice the unit adjustment value. Thus for a 47% ore in 1938 the deduction was: 1.5% off at $0.11068 down to 50%, 1% off at 1.5 × $0.11068 down to 49%, and 2% off at 2 × $0.11068 down to 47%, or a total deduction of 5 × $0.11068 = $0.55.

Standard phosphorus content for Bessemer ores is 0.045%. Penalties and bonuses are computed on the iron price as above obtained on the basis of 0.8¢ for the first 0.001% difference in P assay from the standard, and this amount increased by 0.05¢ for each further 0.001% departure. Thus a Mesabi Bessemer ore assaying 55% Fe and 0.048% P would have commanded (base price $5.10, 1938): $5.10 + (55 − 51.5) × $0.11068 − ($0.008 + 0.0085 + 0.0090) = $5.46 per long ton.

Iron base for southern United States ores is definitely lower than that for Lake Superior because of the self-fluxing character of the impurities ($CaO + SiO_2$).

Average base prices at Lake Superior mines were $3 to $3.50 per long ton in the early 1920's and $5 to $5.25 in 1938. Southern base averages 50 to 70% of Lake Superior. Northeastern United States concentrates are commonly sold on a unit basis. In general, they command 10 to 20% higher prices than Lake Superior when demand is good and 20 to 30% lower prices when demand is poor.

Minor Metals

Aluminum. Bauxite is the principal ore. For production of metal the Al_2O_3 content should be 50 or 52% Al_2O_3 minimum, less than 7% SiO_2 and 6.5% Fe. Silica premium (<7% SiO_2) and penalty are of the order of 15 to 20¢ per long-ton unit up to and including 13% and 30 to 40¢ per unit for higher contents. Low Fe and Ti (2.5 to 3% max.) are preferred in the manufacture of aluminum chemicals, but SiO_2 may be 15 to 20%; for aluminum abrasives SiO_2 and Fe_2O_3 should be less than 5% each, and TiO_2 less than 4%; for refractories Fe and Ti must be low but SiO_2 may be high. Prices for domestic bauxite during the 1930's ranged from $6 to $7.50 per long ton.

Chrome ore. The important characteristics are the Cr_2O_3 content, the Cr : Fe ratio, and the SiO_2, P, and S contents. Typical specifications follow:

		High-grade	Low-grade A	Low-grade B
Cr_2O_3	Min....	45.0%	40.0% *a*	40% *a*
SiO_2	Max....	11.0	13.0	None
P	Max....	0.20	0.50	None
S	Max....	0.50	1.00	None
Cr : Fe	Min....	2.5	2.0	None

a Rejection at 35%; penalties imposed for deficit.

Prices (1942): HIGH-GRADE, base $40.50 per dry long ton at 45% Cr_2O_3 and Cr : Fe = 2.5; premiums of 90¢ per long-ton unit of Cr_2O_3 above 45.0% and of $1.50 per ton for each increase of 0.1 in Cr : Fe up to 3.0. LOW-GRADE A, base $28 at 40% Cr_2O_3 and Cr : Fe = 2.0 with the same premiums as for High-grade; penalty of $1.40 per long-ton unit deficit in Cr_2O_3 down to 35% Cr_2O_3. LOW-GRADE B, base $24 at 40% Cr_2O_3 with premium of 60¢ per long-ton unit of Cr_2O_3, and penalty of $1.20 per long ton for each unit deficit in Cr_2O_3 down to 35%.

Prior to 1939 all U. S. consumption of chrome ore was imported. Prices per long ton c.i.f. Atlantic ports were $16 for South African Low-grade, and ranged from $19 for 44% Cr_2O_3 to $26 for 50%.

Manganese. Domestic ores are of CHEMICAL GRADE (>80% MnO_2); HIGH GRADE, LOW-GRADE A, or LOW-GRADE B according to the following schedule:

		High-grade	Low-grade A	Low-grade B
Mn	Min.....	48.0%	44.0%	40.0% *a*
Al_2O_3	Max.....	6.0	10.0	None
Fe	Max.....	7.0	10.0	None
P	Max.....	0.18	0.30	0.50
SiO_2	Max.....	10.0	15.0	None
Zn	Max.....	1.0	1.0	1.0

a 35% min. may be accepted with price penalties.

MANGANIFEROUS ORES are iron ores containing ±10% Mn and ±40% Fe. Ores are bought on a sliding scale based on a standard specification, *e.g.* (1943).

	Standard (black-oxide ore) *b*	Reject at	Penalties per unit of Mn for each % off standard
Mn.....	45.0	Under 40.0%	2¢ per unit *a*
Fe.....	7.0	Over 10.0	1¢ per unit
SiO_2.....	10.0	" 15.0	1¢ per unit
Al_2O_3.....	6.0	" 10.0	1¢ per unit
P.....	0.18	" 0.30	1¢ per 0.03%
Zn + Cu + Pb..	1.0	" 1.5	None

a Premium, 1¢ per unit of Mn for each 1% in excess of 45%.

b Concentrate must be nodulized or sintered. Carbonate ore must be calcined.

SIZE SPECIFICATION: None >12-in.; not more than 25% <20-m.

Base price per unit varies with the grade of ore; *e.g.*, in 1943 a base price of $1 per long-ton unit was quoted for High-grade ore, 80¢ for Low-grade A, and 65¢ for Low-grade B specified as above, with rejection limits in the cases of High-grade and Low-grade A being the specifications for the next lower grade.

Prior to 1939 most of the manganese used in U. S. was imported. Prices per long ton in 1938 were: Chemical grades: 80% min., $50 c.i.f. U. S. seaport; 85% min., $60 to $62 c.i.f. U. S. seaport; domestic, 70 to 72%, $47 to $52 f.o.b. mines. Metallurgical grades: 50 to 55% Mn, 45¢ per long-ton unit. Domestic manganiferous ore: 10% Mn, 22¢ per long-ton unit and 5¢ per unit of iron, delivered to furnaces. Manganese metal is sold mostly as 80% ferromanganese; prices per long ton for this alloy have been: 1929, $105; 1932, $69.33; 1937, $97.04; 1938, $97.40; 1942, $130.

Tin. Cassiterite concentrate is bought on the basis of an assay adjusted for smelting loss, and subject to a sliding treatment charge that increases with decrease in tin content.

Penalties are imposed for excesses above specified maxima of most of the usual metallic impurities. An abstract of a typical contract (1940) follows:

I. For concentrate containing more than 55% tin, and a maximum of 1% total Sb + As + Bi + Cu + Pb + Zn of which Sb + Pb shall not exceed 0.3%: *Pay* for tin contents less one (long-ton) unit. *Deduct:* BASE TREATMENT CHARGE (60% Sn), $30.40 per long ton, with decrease of $1.20 per unit up to 65% Sn and 60¢ per unit above 65%, or with increase of $1.20 per unit down to 55% Sn. PENALTIES: S, 3% free, 23¢ additional treatment charge for each 0.1%.

II. For concentrate (>55% Sn) with more impurities than I: BASE TREATMENT CHARGE (60% Sn) is $31.60 with adjustments for tin content as in I. PENALTIES: As + Cu + Bi + Zn, 0.5% total free; for excess deduct 45¢ for each 0.1%. Sb + Pb, 0.5% free; excess penalized at 45¢ for each 0.1% up to maximum allowable combined content of 2.25%, of which Sb shall not exceed 0.5% nor Pb 1.75%. S as in I.

III. For concentrate (>55% Sn) containing more than the above allowable percentage of Sb or Pb: BASE TREATMENT CHARGE (60% Sn) is $32.25 with adjustments for tin content as in I. PENALTIES: For combined As + Cu + Bi + Zn, as in II. *Lead:* 1% free; 45¢ per 0.1% excess from 1% to 2%; 70¢ per 0.1% from 2% to 4%; 80¢ per 0.1% in excess of 4%. *Antimony:* 0.5% free; 45¢ for each 0.1% excess from 0.5% to 0.75% (fractions prorated); 70¢ for each 0.1% excess from 0.75% to 1%; excess above 1%, special. S as in I.

IV. For concentrates assaying 35 to 50% Sn: *Pay* for tin content less 1.25% for 55% Sn and increase assay deduction 0.05% for each 1% that tin content falls below 55% (fractions prorated). *Deduct:* BASE TREATMENT CHARGE (55% Sn), $35.00 per long ton. Increase treatment charge 23¢ for each 1% below 55% Sn. Increase treatment charge 1.25¢ for each dollar rise in quoted price of tin above $936 per long ton. PENALTIES: Sb + Pb + Bi + Cu + As, 3% total free; 35¢ for each 0.1% excess up to 5%. If excess exceeds 5%, deduct further 45¢ per 0.1% excess of Sb over 1.2%. As: 45¢ per 0.1% excess over 0.2%. Zn: 12¢ per 0.1% excess over 3% (max. of $7.05 per ton of concentrate). S: 3% free; $2.35 per ton from 3 to 5%; $4.70 per ton from 5 to 10%; $7.05 per ton from 10 to 15%; $9.40 per ton above 15%.

V. For concentrates assaying 18 to 35% Sn: *Pay* for tin content less 1.5%. *Deduct:* BASE TREATMENT CHARGE (25% Sn), $42.25 per long ton; add 60¢ for each 1% below 25% Sn and deduct 30¢ for each 1% increase in assay above 25%. Add 1.25¢ to the treatment charge for each increase of $1 above $936 per long ton in the quoted price of tin. PENALTIES: Sb: not to exceed 2.5%. Cu: 1.5% free; 23¢ per 0.1% excess. Zn: as in IV. As: as in IV. Bi: as As. S: 3% free, 45¢ per 1% excess from 3% to 12%, and 23¢ per 1% excess above 12%.

Tungsten. Ore and concentrates are normally classified into a variety of grades; the following abstract of a broad contract for Bolivian ores is illustrative:

Class A, High-grade wolfram concentrates. Standard quality: WO_3 min. 65%; Sn max. 1.5%; As max. 1.0%; S max. 1.5%; Cu max. 0.8%.

PENALTIES: 45¢ per short ton unit of WO_3, for each 1% WO_3 below 65% down to and including 60%; 9¢ for each further 1% WO_3 below 60% down to and including 55%. Privilege of rejection under this classification if the WO_3 content is less than 55%, or accepting at a mutually agreed allowance. *Tin:* 1.6% free; 3¢ penalty per short-ton unit of WO_3 for each 0.1% tin above 1.5%. *Arsenic:* 1.0% free; 15¢ per short-ton unit of WO_3 from 1% to 1.5%; 20¢ per short-ton unit of WO_3 for 1.5% to 2.0%; $1.00 per short-ton unit of WO_3 for 2% to 3.0%, with a limit on the amount acceptable. *Copper and sulphur:* Ores or concentrates assaying more than 0.8% Cu, or more than 1.5% S and not subject to these rejection options (WO_3 <55%; or As >3.0%; or Cu >1.6%; or S >2.0%), shall be paid for at a discount of $1 from agreed price per short-ton unit of WO_3, subject to the above recited penalties for WO_3, Sn, and As.

BONUSES: If Sn is <1%; As <0.2%; S <0.75%, and WO_3 content 65% or better, pay 10¢ per short-ton unit above agreed price for 65% WO_3, and 10¢ additional for each 1% increase in WO_3 up to 70% WO_3; above 70% as for 70%.

Class B, Low-grade wolframite concentrates containing from 55% WO_3 to 30% WO_3 in the form of wolframite are subject to the same penalties for WO_3, Sn, As, Cu, and S, and to the same rejection options for impurities as for Class A ores and concentrates, and shall pay an additional penalty of $1 per short-ton unit of WO_3 (complex ores of wolfram and tin covered by Class F excepted). Privilege of rejection below 30% WO_3.

Class C, High-grade scheelite concentrates: Standard quality: WO_3 min. 60%; Sn max. 0.5%; As max. 0.5%; S max. 1.0%; Cu max. 0.2%. Base price as for Class A. PENALTIES: 9¢ per short-ton unit of WO_3 for each 1% WO_3 below 60% down to and including 55% (fractions in proportion). Privilege of rejection if the WO_3 content is less than 55%, or acceptance at a mutually agreed allowance. *Tin:* 0.5% free; 3¢ penalty per short-ton unit of WO_3 for each 0.1% tin above 0.5%. *Arsenic:* 0.5% free; from 0.5% to 1% penalty of 15¢ per short-ton unit of WO_3. *Copper and sulphur:* If not subject to these rejections (WO_3 <55%; or Sn >1%; or As >1%; or Cu >0.5%; or S >1.5%) ores and/or concentrates with Cu >0.2% or S >1.0% penalized $1 per ton off the agreed price per short-ton unit of WO_3, subject to the above recited penalties for WO_3, Sn, and As.

BONUSES: If Sn <0.2%, As <0.1%, S <0.75%, and WO_3 60% or more, 10¢ per short-ton unit above agreed price for 60% WO_3; 10¢ additional for each 1% of WO_3 in excess of 60% up to 65%; above 65% as for 65%.

Class D, Low-grade scheelite concentrates and ores containing less than 55% WO_3 and more than 30% WO_3 are subject to the same penalties for WO_3, Sn, As, Cu, and S, and to the same rejection options as Class C ores, plus an additional penalty of $1 per short ton unit of WO_3 (Class F ores excepted).

Buyer may purchase, subject to the above recited penalties, ores and concentrates containing less than 30% WO_3.

Class E, Clean Low-grade scheelite concentrates with negligible Sn, As, and S: $2.50 short-ton unit of WO_3 off Class C, if they meet the following specifications: WO_3 >30%; S <1%; As <0.05%; Sn <0.05%.

Class F, Complex tungsten-tin ores and concentrates containing from 20% to 45% WO_3 in the form of scheelite or mixed wolfram and scheelite and 18% to 35% Sn. Price $3.50 per short-ton unit of WO_3 off Class A. Buyer also pays for 90% of the tin content on the terms paid for Bolivian tin ores (p. 266).

Class G, Low-grade scheelite with content of barium sulphate: $3 off Class C per unit of WO_3, if the WO_3 content is not less than 30%.

Smelter contracts, and other agreements for sales of ore and concentrates, are subject to specific legal rules of consummation and performance, and should be entered into only under the direction of a competent lawyer, and with the advice of engineers or metallurgists with full knowledge of the technical matters involved. Walker (*Ed. 3 Peele 32–18*) lists points to be covered as follows:

(1) Duration of contract; (2) approximate amount of ore to be delivered; (3) rate at which the ore is to be delivered (if known); (4) point at which delivery is to be made from miner to purchaser; (5) arrangement respecting freight rates; (6) method for weighing the ore; (7) determination of moisture; (8) arrangement for representation of both seller and buyer; (9) manner in which the ore is to be sampled, and sampling paid for; (10) number of final samples to be taken, and disposition of same; (11) assay and analytical methods to be used in determining the ore constituents; (12) settlement of splitting limits; (13) mode of settlement when determinations by seller and buyer are within the splitting limits; (14) arrangement for umpire, if difference exceeds the splitting limits; (15) mode of settlement in case samples are sent to umpire; (16) terms of payment for metals; (17) the effect, if any, which fluctuations in market price shall have on terms of payment; (18) the effect, if any, which the value or composition of the ore shall have on these terms; (19) dates on which metals are to be paid for; (20) statement of payments to be made and penalties to be levied for specific ore constituents; (21) the base on which settlements will be made; (22) amount which will be advanced (if desired) by purchaser to seller, at any time after settlement has been agreed upon and before final payment is made; (23) possible conditions which shall be considered as valid reasons for failure to deliver or receive ore under the contract; (24) arrangements for submitting disputes to arbitrators, instead of to the courts.

SECTION 3

INDUSTRIAL MINERALS

BY

PAUL M. TYLER

ART.		PAGE
1.	Abrasives	01
2.	Asbestos	03
3.	Barium minerals	06
4.	Bentonite	10
5.	Bitumens	10
6.	Borates	11
7.	Brucite	12
8.	Chalk and whiting	12
9.	Clay	13
10.	Corundum and emery	18
11.	Cryolite	20
12.	Diamond	20
13.	Diatomite	22
14.	Dolomite	23
15.	Feldspar	26
16.	Fluorspar	30
17.	Fullers' earth and bleaching clays	35
18.	Garnet	36
19.	Gem minerals	37
20.	Graphite	38
21.	Gypsum	40
22.	Iceland spar	42
23.	Kyanite	43
24.	Limestone	46
25.	Magnesite	61
26.	Meerschaum	63
27.	Mica	64
28.	Mineral pigments	66
29.	Nitrates	67
30.	Phosphate	70
31.	Potash	77
32.	Pumice and pumicite	80
33.	Pyrophyllite	82
34.	Quartz, silica, and special sands	82
35.	Refractories	87
36.	Salines (general)	90
37.	Salt	91
38.	Sand and gravel	92
39.	Slate	102
40.	Stone (dimension)	103
41.	Stone (crushed)	105
42.	Sulphur	118
43.	Talc and soapstone	120
44.	Tripoli	122
45.	Vermiculite	124

Introduction. The solid nonmetallic-mineral industry far exceeds the metallic mineral industry in bulk of material handled annually; the sales value is many times greater; the variety of forms in which the product of the dressing operation is demanded is many fold larger; and the dressing methods are more specific to the crudes, of greater variety, and, while generally of lesser complexity, are, in a few cases, even more complicated. SELLING is almost invariably a matter of individual bargaining between producer and buyer; general specifications are indefinite or lacking completely; and working specifications frequently involve, in addition to specific chemical and physical ranges, requirements as to effects on the senses of the buyer—feel, taste, sight, and even sound and smell—with or without a further test of behavior in some process of manufacture. METHODS OF DRESSING are, therefore, often rule-of-thumb procedures, developed to meet the requirements of a given buyer, inexplicable to a student who does not know the particular specification, and often inexplicable to one who has this knowledge. Generalization as to treatment methods is, under these circumstances, impossible in certain cases, and an attempt thereat would be misleading and harmful. Where it has been deemed possible, flowsheets have been given that will, with normal crudes, yield products that will satisfy general demands and that are capable of minor modification to fit specific demands. In other cases, examples are limited to specific flowsheets; these, in absence of any statement to the contrary, must be taken to represent a specific treatment of a specific crude for a specific market demand, and should be read accordingly.

Prices given in the succeeding articles are for 1938–39 unless otherwise noted.

1. ABRASIVES

Natural abrasive materials may be classified on the basis of the form in which they are used as: (1) MASSIVE, which are shaped directly into grindstones, millstones, pulpstones, whetstones, etc.; and (2) GRANULAR, which are used in the form of loose or cemented

grains. Abrasives act by cutting tiny shavings with each grain; the character and shape of individual grains are, therefore, of paramount importance. Artificial abrasives, especially silicon carbide and electrically fused alumina, are usually more uniform than the natural minerals and have, therefore, gradually displaced the latter for massive grinders, both manufactured and naturally bonded.

The natural abrasives, in order of decreasing hardness, are diamond, corundum and emery, garnet, silica sand and quartz. Highly siliceous materials which occur or are used in powder form as mild abrasives are pumice and pumicite, and the so-called SOFT SILICAS, *e.g.*, diatomite and tripoli. Clay, chalk, and feldspar are used in scouring, cleaning, buffing, and polishing.

Uses. Grinding wheels are used in many industries, but, as above noted, manufactured wheels made mostly from artificial abrasive grains with only minor admixtures of corundum predominate. Emery wheels made from natural abrasive grains are substantially obsolete. In making coated abrasive products, quartz, garnet, and, to a minor extent, emery are still used quite generally. The automobile industry is by far the largest user of both high-grade grinding wheels and abrasive-coated papers or cloths. Today the only demand for grindstones is for diameters greater than 5 ft., for use principally in the making of saws, files, machine-knives, scythes and shears, and cutter-bars for agricultural machinery. Many pulpstones are even larger than the grindstones.

Occurrence. Only occasional sandstone deposits are suitable for grindstones. Apart from requirements as to grain size and bond, such deposits must be thick enough to permit cutting stones of large diameter at right angles to the bed, and the joints must be far enough apart to permit blocks of suitable size to be quarried. Millstones have been produced in various parts of the United States; perhaps the best buhrstones come from France, consisting of fresh-water cellular quartzite or flint of Tertiary age. The United States and England are the largest producers of pulpstones; the domestic output comes chiefly from northern West Virginia. Most grindstones come from Ohio. Carboniferous sandstones appear to be most productive of suitable material for grindstones and pulpstones. Sharpening stones are of wider distribution because they may come from thinner beds; the Arkansas novaculite beds range from a few inches to 15 ft. in thickness, but are badly shattered, so that much waste must be rejected. The well-known Pike (N. H.) scythestone is a mica schist, but fine-grained sandstones and siliceous argillites are also used for sharpening stones. The Belgian razor hone is a damourite slate containing innumerable garnets, and is interbanded with a blue-gray slate so that double-faced stones can be produced.

Production. The United States and Canada are probably the largest sources of natural pulpstones and certain other kinds of naturally bonded grindstones and sharpening stones; but England is an important producer, and similar products are made in other parts of

Table 1. Domestic production of miscellaneous abrasives

Commodity	1925–29 (average)		1930–34 (average)		1937	
	Short tons	Value	Short tons	Value	Short tons	Value
Natural abrasives:						
Emery	785	$ 8,582	512	$ 5,683	320	$ 2,780
Garnet	6,869	540,996	3,057	218,805	4,863	382,535
Grindstones	25,231	719,422	9,706	277,490	11,617	352,377
Ground sand and sandstone	278,545	1,937,760	205,212	1,227,514	328,156	1,996,528
Millstones, chasers, etc.	.....	35,632	.....	9,194	.....	8,305
Oilstones, whetstones, etc.	1,098	233,878	467	94,822	810	112,841
Pulpstones	8,486	857,439	2,673	176,039	2,939	220,331
Pumice and pumicite	54,402	248,117	59,253	271,756	71,007	301,936
Quartz	23,702	217,768	11,588	90,113	13,012	66,041
Tripoli	31,782	501,359	23,061	346,015	34,936	450,570
Diatomite	89,316	1,233,713	78,840	1,229,637	107,000*a*	1,700,000*a*
Total natural abrasives *b*	520,216	$6,534,666	394,369	$3,947,068	575,000	$5,600,000
Artificial abrasives:						
Silicon carbides	23,980	$2,429,257*b*	15,288	$1,510,020*c*	30,365	$2,215,318
Aluminum oxides	55,982	5,090,034*b*	33,529	2,781,268*c*	86,401	4,749,497
Metallic abrasives *d*	15,879	951,455	10,634	587,350	28,031	1,399,772
Total artificial abrasives *d*	95,841	$8,470,746	59,451	$4,878,638	144,797	$8,364,587

a Estimated.
b Exclusive of flint lining and pebbles, and tonnage of millstones.
c Prior to 1936, value included some grain.
d Data for metallic abrasives probably incomplete.

the world. Artificial nonmetallic abrasives are produced in large quantities in Canada and the United States and are made in France, Norway, Sweden, Germany, and other European countries. Domestic production is given in Table 1.

Granular-abrasive grade designations, for bulk material and for coatings, may be either arbitrary markings, which date back a century, or a bolting-cloth mesh designation which approximates but does not exactly correspond to the Tyler testing-sieve meshes. In modern usage only flint and emery have not yet been brought into mesh designation. Table 2 gives the modern mesh designation and the old garnet, the flint, and the emery scales.

Table 2. Size grades for abrasives

Modern mesh designation	Old garnet scale	Flint scale	Emery scale
400	.....	.....	.....
320	.....	.....	.....
280	8/0	.....	.....
240	7/0 *b*	5/0	.....
220	6/0	4/0	.....
.....	.....	3/0	.....
180	5/0	.....	3/0
150	4/0	2/0	2/0
120	3/0	.....	1/0
.....	.....	1/0	.....
100	2/0	.....	.....
.....	.....	1/2	1/2
80	1/0	.....	1
.....	.....	1	.....
60	1/2	.....	1 1/2
50	1	1 1/2	2
.....	.....	2	2 1/2
40	1 1/2	.....	.....
.....	.....	2 1/2	.....
36	2	.....	3
30	2 1/2	3	.....
24	3	3 1/2	.....
.....	3 1/2 *a*	.....	.....

a Approximately 20-m. Tyler.
b Approximately 220-m. Tyler.

Selling. Sandstone for grinding stones must be of uniform hardness, possess sharp grains of even size, and be free from clay and other soft impurities. Grain size determines the use, but strength of bond has much to do with value, because the stone should crumble in use only enough to prevent glazing the grinding surface. Specifications for all kinds of abrasives are based mainly on performance, and prices depend upon negotiation between buyer and seller.

Sales of domestic pulpstones have averaged around $60 a ton but have fluctuated from less than $50 to more than $80 a ton. In Canada, small stones for 2-ft. wood weigh 2 to 2 1/2 tons and cost (1937) the paper makers $300 each, whereas those for 4-ft. wood, weighing 5.5 to 7 tons each, sold for $1,100.

Treatment. The making of small sharpening stones, oilstones, etc., begins with splitting the stone at the quarry into approximately the desired shape; it is then conveyed to the mill and placed on rubbing beds where it is ground to the desired uniform size. Small pieces of Arkansas novaculite are built up in layers with plaster of Paris into blocks which are sawed with band saws into 2-in. slabs. Ordinary sand is commonly employed for cutting and polishing. Larger stones are usually fabricated by hand, the important point being the extraordinary care that must be taken in handling, not only to avoid chipping the edges but in drying out the quarry sap and preventing frost damage in winter. Large stones are seasoned for as much as 2 years and small ones for 1 year, although the period may be shortened if the stone is first steamed for several hours at about 180° F. in a closed chamber.

Manufactured abrasives are made in electric furnaces. The fused masses are broken with a skull cracker, and eventually the coarse gravel and small lump sizes are screened out and hand sorted as ABRASIVE ORE for shipment to plants where it is further crushed and sized into various types of GRAINS. Fines and other rejects return to the furnace.

Few milling operations require more care than the preparation of high-quality abrasive grains. Whereas the abrasive is worth only about $20 per ton, the grains are worth as much as $100 per ton, but the fines are of small value. Hence the problem is to avoid production of fines as well as to obtain equiaxed grains with chisel-like edges.

Graded crushing and close sizing on screens is the general practice. In a typical plant the crude is crushed to 1/2- to 1/4-in. in a cone or similar crusher; as many as 9 pairs of rolls may be employed in series to reduce the product to 8-m. Certain sizes are finished in a dry pan, but much of the treatment is wet. Virtually all grains are sluiced to rake classifiers, the slime from which is recovered in a thickener and filter, though it has little value. Iron from machines and a small amount of iron-bearing impurities are removed by high-intensity magnets. Final sizing is within exceedingly close limits, as indicated in Table 2. At a typical plant, the products from vibrating screens are re-run twice over double-deck Rotex screens before being spouted to shipping bins.

Concentration of natural abrasives is described under the names of the respective minerals.

2. ASBESTOS

Ores. Asbestos is a commercial term applied to fibrous varieties of several minerals that differ widely in composition and in strength, flexibility, and quality of fiber. CHRYSOTILE, $H_4Mg_3Si_2O_9$, is the fibrous form of serpentine; the bulk of the world production of both long and short fibers is of this variety. Other varieties belong to the amphibole group of minerals; ANTHOPHYLLITE, $(Fe,Mg)SiO_3$,

though brittle and of low tensile strength, is more resistant to acids and heat than chrysotile and is used to some extent for nonspinning purposes; AMOSITE, an iron-rich anthophyllite mined in Africa, has very long fibers, some of which are flexible enough to spin; CROCIDOLITE or BLUE ASBESTOS, $Na_2Fe(SiO_3)_2 \cdot FeSiO_3$, occurs in commercial quantities chiefly in Africa and is used like serpentine asbestos for both spinning and nonspinning purposes. Fibrous TREMOLITE, $Ca_2Mg_5(SiO_3)_4$; ACTINOLITE, $Ca(Mg,Fe)_3(SiO_3)_4$; and HORNBLENDE, a complex silicate similar in composition to actinolite, may also be classed as asbestos but, except for Italian tremolite, these have little commercial value. MOUNTAIN LEATHER, MOUNTAIN CORK, and MOUNTAIN WOOD are fibrous sheets or masses of naturally felted amphibole but are only mineral curiosities.

Apart from strength and flexibility, the quality of asbestos is measured to some extent by the fineness of fiber and by the amount of processing necessary to reduce it to the fineness desired. SP. GR. of Canadian chrysotile is 2.54 to 2.59, of Arizona fiber (lower in Fe) 2.47, and of the pure mineral probably about 2.2; anthophyllite ranges from 3.1 to 3.2 and crocidolite from 3.2 to 3.3. Notwithstanding its use in heat insulation, asbestos itself does not have low HEAT CONDUCTIVITY. Chrysotile may withstand temperatures of 3,000° F. or more, but is likely to become brittle if heated sufficiently to drive off much water of crystallization; amphiboles contain less water and therefore withstand higher temperatures, except that crocidolite fuses readily on account of its high iron content. Iron impairs the ELECTRICAL RESISTANCE of chrysotile, but amphiboles may have good electrical properties because their iron is combined as silicate.

Uses. The largest use of the longer grades (SPINNING FIBERS) of chrysotile, crocidolite, and (exceptionally) tremolite is in automobile brake linings; asbestos yarns and cloth are also used in gaskets, fireproof curtains and clothing, electrical insulation, conveyor belts for hot materials, and braided and twisted packings. Medium-length fibers are used in shingles and other asbestos-cement products such as pipes and corrugated sheets. Short fibers are felted into paper or millboard or used as binders in 85% magnesia coverings, asphalt paints, cements, stucco, and molded goods. Acid-washed amphibole is used as filtering medium.

Occurrence. There are three types of asbestos deposits, *viz.*, cross-fiber, slip-fiber, and mass-fiber. Most commercial deposits of chrysotile, amosite, and crocidolite are CROSS-FIBER type, the fibers extending across veins from wall to wall, except when interrupted by longitudinal seams. Such veins vary in width from mere streaks to a maximum of about 6 in. In SLIP-FIBER deposits the strands are more or less parallel to the vein walls, occupying shear zones where rock has been subjected to movement and pressure. In MASS-FIBER deposits, confined to anthophyllite, the entire rock is composed of bundles of fibers.

Production. Canada, U.S.S.R., and Africa, in order, are the leading sources of asbestos, but the Canadian output is preponderantly lower-priced short fibers. Domestic (mostly Vermont) production in 1937 was 12,079 short tons, valued at $344,644. World consumption in 1934 was estimated at 300,000 metric tons; Europe used about half, and slightly over one-third was consumed in the United States. In 1937 the United States consumed over 300,000 tons valued well over $10,000,000.

Selling. Asbestos is sold in 100-lb. or 125-lb. bags on a short-ton basis, bags included. Quotations are mostly f.o.b. mines. A short ton bulks 60 to 90 cu. ft., longer fibers being bulkier. Canadian producers sell direct to consumers and also to dealers and agents. See Table 3.

Market requirements are based principally on fiber length, but strength, flexibility, color, chemical composition, and cleanliness are considered. Old practice graded fiber into three main groups: crudes, mill fibers, and shorts. The term CRUDES was applied to fiber of spinning grade, 3/8 in. or longer, which had been hand-cobbed and not passed through the mill. MILL FIBER was spinning fiber that had been prepared mechanically. SHORTS was material too short for spinning. In 1931 Canadian producers agreed upon a uniform classification of mill-produced fibers into nine groups, each group being subdivided into grades. Except for the lowest grades, which are based upon weight per cubic foot, all milled grades are based on tests in a standard machine consisting of a nest of 4 wooden boxes

Table 3. Grades (*b*) and prices of Canadian asbestos

Group	Designation	Fiber length, minimum	Average price per short ton, f.o.b. mill		
			1929	1932	1939
1	Crude No. 1	0.73-in.	$557.38	$400 to 450	$650 to 750
2	Crude No. 2	0.375-in.	331.82	200 to 225	150 to 350
3	Spinning or textile	0–8–6–2	177.30	80 to 125	110 to 200
4	Shingle	0–1.5–9.5–5	75.26	60 to 90	57 to 130
5	Paper	0–0–8–8	38.56	.....	40 to 45
6	Waste, stucco, plaster	0–0–6.5–9.5	.....	.....	21 to 25
7	Refuse or shorts	0–0–1–15 *a*	.....	10	12 to 16.50

a Also specified as weighing 35 lb. or less per cu. ft., loose measure.

b Additional to the groups listed, Group 8 is SAND, over 35 but under 75 lb. per cu. ft., and containing a preponderance of rock; Group 9 is GRAVEL AND STONE, mill products weighing 75 lb. and r per cu. ft., loose measure.

comprising 3 metal screens and a bottom tray. Screen apertures, in inches, are 0.5, 0.063, and 0.047 respectively. A 1-lb. sample is placed on the top (coarsest) screen and the nest shaken by an eccentric (25/32-in. throw) at 300 r.p.m. for exactly 2 min. At the end of each test the asbestos that remains in each tray is weighed. Results of this screen test are expressed in ounces. Thus 8–6–1–1 (the best or 3D grade) means 8-oz. on 2-m., 6-oz. on 10-m., 1-oz. on 4-m., and 1-oz. <14-m. Samples for testing usually are taken at the grading machines every 30 min. Owing to unavoidable variations in fiber as it comes from the pit, the quality of mill-run fiber usually is maintained a little higher than its designation.

Prices of Canadian asbestos have fluctuated greatly during the past 20 years. In 1920 Crude No. 1 was selling at more than $3,000 a ton but by 1924 it was down to $365 (compared with $350 in 1913). Shingle stock that sold for $130 in 1920 was down to $45 in 1924.

Legend for Fig. 1:

1. 36-in. max., by cars.
2. Polius slicing-bar grizzly.
3. Kennedy-Van Saun gyratory, No. 36, 5-in. set.
4. Picking belt.
5. 2 @ No. 38 Kennedy-Van Saun gyratory crushers, 2- to 2 1/2-in. set.
6. Conveyor; 4 @ 5 1/2×40-ft. rotary driers run concurrent to avoid SCORCHING (partial dehydration); 35,000-ton dry-rock storage bin; conveyor with Weightometer.
7. 2 trommels.
8. 2 @ No. 37 Kennedy-Van Saun gyratory crushers.
9. 2 shaking-screen suction tables; 250 to 450 r.p.m.; slope, 1 : 12; 2 hp. each.
10. 2 as (9).
11. Hammer mill with circumferential-curved grate to facilitate fiber discharge.
12. Bucket elevator.
13. 4 as (9).
14. 8 as (9).
15. 4 Jumbo mills; see (23).
16. 9 horizontal cylindrical graders.
17. 12 as (9).
18. 4 as (9).
19. 4 Jumbo mills.
20. 4 as (9).
21. 8 shaking-screen suction tables; see (11).
22. 10 as (16).
23. Jumbo mill comprises a horizontal cylinder, 6 to 8 ft. long, through which runs a horizontal shaft with arms having beveled tips. Speed is moderate. Feed is introduced at the top at one end and is rubbed and ground against the cylinder as it is moved toward the bottom discharge port at the other end by the action of the arms. All wearing parts are replaceable.

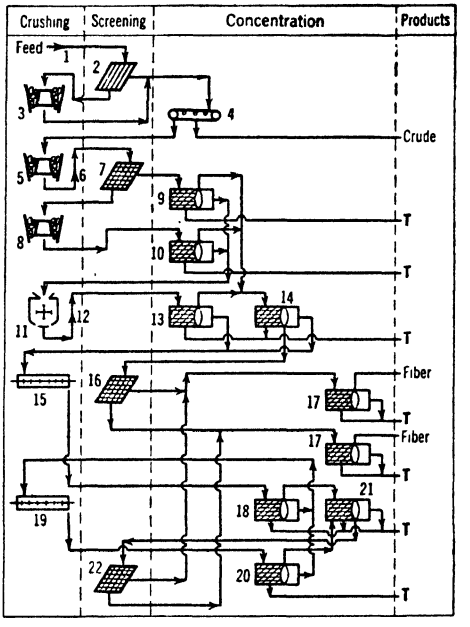

FIG. 1. Typical Canadian asbestos mill.

Treatment (*133 J 102*). Asbestos milling should recover as large a percentage as possible of long fiber even at some sacrifice of recovery of shorter fiber. Flowsheets were formerly quite complicated but practice in Canada, hitherto always the pioneer, is becoming simpler. Essential factors are the fibrous nature and greater tensile strength of fiber compared to serpentine gangue. Crudes and longer fibers are extracted first by a process based on tensile strength before much fiberizing is done on shorter fibers; the latter, after graded crushing, are separated by air suction. The total fiber recovery in Canada in 1929 (*Bul 707 CMB 60*) was 5% of the rock mined and 7.7% of rock milled, but only 1.5% of the asbestos so recovered was crudes and over 90% was short, nonspinning grades. Wet processes for asbestos milling give promise of better recovery of fiber and should eliminate the dust problem, but so far have not been adopted commercially.

Jaw crushers appear preferable for primary breaking, though gyratories are also used. Secondary crushing is done in jaw or gyratory, cone or hammer mill. Tertiary units comprise gyratories, cones, disks (in one case), but are usually hammer mills. Rock is dried at 2- or 2 1/2-in. size in horizontal rotary direct-heat driers. Most mills have at least 25,000 tons storage capacity for dry rock; one can store 150,000 tons so as to avoid all winter mining. Owing to the absorbent nature of the ore, wet storage gives trouble from snow and ice in cold climates. Separation is made by suction through fishtail pipes which are suspended over flowing streams of properly prepared ore. Such pipes may be provided over all crushers and conveyors, as well as over the cleaning devices. Flat, shaking-screen tables with suction pipes are much used for recovery of mill fiber. They separate waste sand (8-,

10-, or 12-m. undersize), and stratify rock and fiber with the latter at the top exposed to the action of the ASPIRATORS, which are sheet-metal hoods extending the full width of the table (usually 5 ft.) with a 4-in. opening. Aspirators can be raised or lowered to control the type of fiber picked up. Suction mains are circular (12- to 20-in. diam.); they lead to fiber collectors which operate under 1 1/2- to 2-in. water suction. FLOATS from the top of the collector discharge into one large dust chamber where they precipitate. Collectors, usually vertical cylinders, are 5 to 7 ft. diameter and about the same height; they discharge intermittently by gravity through a canvas trap in the bottom which opens when the weight of accumulated fiber overbalances leather springs.

Fiber thus collected is further cleaned or graded on screens. In modern mills the graders are trommels 3 to 5 ft. diameter and usually 5 ft. long. The first screen may be stationary and equipped with an inner shaft carrying arms and paddles and rotating at 600 to 800 r.p.m. Other trommels rotate but also have light wooden paddles rotating inside them at 180 to 250 r.p.m. to agitate the fiber.

Flowsheet for a typical Canadian mill is given in Fig. 1.

3. BARIUM MINERALS

Ores. Barite, $BaSO_4$, is the principal economic barium mineral. COLOR: white, when pure, but may be gray, yellow, blue, red, brown, or black; LUSTER: vitreous to resinous or pearly; SP. GR.: 4.3 to 4.6; HARDNESS: 2.5 to 3.5; insoluble in water or acids; fuses with difficulty (3 1/2) but usually decrepitates, losing SO_3. Some specimens have fetid odor. Witherite, $BaCO_3$, is not mined extensively except in England; it is almost as heavy as barite, usually somewhat softer, and effervesces with cold dilute HCl.

Uses. Barite is used chiefly in paint, over one-half of domestic consumption being made into lithopone, a white pigment that contains typically 70% precipitated $BaSO_4$ and 30% ZnS. Finely ground barite itself is used in paints; also as filler in various industries, and to a rapidly growing extent as weighting material suspended in rotary drilling muds for high-pressure oil or gas wells. Barite, reduced with C to BaS (BLACK ASH), is the base for most barium chemicals, including precipitated $BaSO_4$ (BLANC FIXE).

Occurrence. Barite occurs abundantly as vein material with lead and zinc ores and also as replacement and cavity fillings in limestone. In the United States it is mined chiefly in residual clays containing particles ranging from sand up to large lumps or masses. Soft or granular barite is preferred to hard, crystalline material, because it is easier to grind. Barite is often associated with flint and calcite and with intergrown hematite, fluorite, or celestite.

Production. World production increased from about 210,000 metric tons in 1913 to 455,000 in 1920 and 900,000 in 1937. Germany, United States, and U.S.S.R. are leading producers, although large tonnages are mined in England, Italy, France, Spain, and other countries. Domestic production, 355,888 short tons valued at $2,225,727 in 1937, comes from three main areas, *viz.*, southern, mid-western, and Pacific. About 80% of the barite produced in the South is shipped to eastern markets, competing with imports; the remainder goes to mid-western markets. The latter, however, are mainly supplied from Missouri, which contributes roughly one-half the domestic output. Georgia is the second producing state, and additional supplies come from Tennessee, Virginia, California, Nevada, and Arizona.

Selling. Ground barite containing as little as 89% $BaSO_4$ may be sold for oil-well drilling, provided the specific gravity is at least 4.2; Fe content is not specified. Ordinarily, however, grinding mills require white barite (or one that readily bleaches white) and specify a minimum of 93 to 95% or even higher content of $BaSO_4$. Lithopone and chemical manufacturers require 95 to 97% minimum $BaSO_4$, 1% maximum Fe_2O_3, and not more than traces of Mn or CaF_2. Strontium is an occasional impurity, but usually is not objected to in small amounts. The glass trade specifies minimum 96% $BaSO_4$, maximum 0.4% Fe_2O_3, and no Mn.

In 1937, the average price of crude barite in Missouri exceeded $7 a short ton for the first time since 1926; the average reported for Georgia mines was about $5.35, in California it was about $6, and in other States prices varied from $3 upward according to freight to consuming centers. Ground barite, in barrels, has been quoted unchanged at $23 a short ton, f.o.b. St. Louis for several years, but average sales f.o.b. mill range from $12 to $25 according to quality (especially color) and locality. Ground witherite, 90% <300-m., has been quoted at $42 to $45 a short ton, f.o.b. Philadelphia, Pa.

Treatment varies with character of ore and scale of mining. In Washington County, Mo. (Weigel, *A TP 201*), much barite (TIFF) is cleaned by hand methods, scraping off adhering clay with hatchets. Roughly picked and dried ore may be rattled in a rocker on a screen with 1/2- to 3/4-in. holes and the undersize rejected or hand-jigged. In larger plants crude ore is dumped into log washers, occasionally after preliminary crushing; head discharge from the logs is screened, followed by hand-picking oversize and jigging undersize. Recent improvements include tabling jig hutch and occasionally classifying log-washer overflow and treating all sand on tables. Flotation, both with soap and with cationic reagents, is readily effected in the laboratory (Sec. 12, Art. 52); two-stage flota-

tion, first with a cationic, would seem best with complex ores. See also *148 A 291* for miscellaneous tests on barite concentration.

Before being finely ground, most barite needs bleaching, usually with hot, dilute H_2SO_4 in lead-lined tanks, NaCl or reducing agents also being added sometimes.

Point Milling & Manufacturing Co. Fig. 2.

Location: Mineral Point, Mo.
Ore: Barite and chert in residual clay.
Capacity: 35 tons cleaned barite per 24 hr.; 500 to 600 tons of feed.
Ratio of concentration: 15 or 20 : 1.
Product: All <300-m.

Legend for Fig. 2:

1. Wagons; track scales.
2. Cobbing floor; pneumatic chisel used for cleaning lump.
3. 1 @ 11×16-in. jaw crusher, 1-in. set.
4. Bucket elevator; 30-ton bin; screw conveyor.
5. 3 @ 12-in.×10-ft. log washers in series. Logs are screw-conveyor spirals with V-notches 1 1/2 in. deep at 4-in. intervals, 20° slope, submerged for 2/3 length; sprayed with 25 @ 1/8-in. jets at 45-lb. pressure, requiring 40 g.p.m.; capacity of three is 120 tons washed sand per 24 hr.
6. 2 @ 10-ft. grinding pans; steel sides, 3 ft. high; bottom of cut blocks of local granite; drag stones roughly equilateral-triangular prisms, 36-in. sides and 18 in. thick when new; leading vertex changed as necessary, 20 r.p.m. Life of stones, 3 yr.; bottom, 18 mo. to 2 yr.; capacity, 12 to 18 t.p.h.; 15 hp. each. Bed of about 8 in. gives best operation.
7. 1 @ 4-in. centrifugal pump.
8. Chip screen.
9. Spitzkasten.
10. 8 @ 7×9-ft. settling tanks.
11. 20 @ 3×9-ft. bleaching tanks made of vitreous tile surrounded by hard lead, which is surrounded by oak staves and iron hoops. Each charge is 2 tons barite with 25% H_2O and a minimum of 240 lb. 66% H_2SO_4. Requires 45 min. to heat nearly to boiling with steam and 6 to 7 hr. minimum to bleach. More acid added if bleach is not complete in 12 hr.

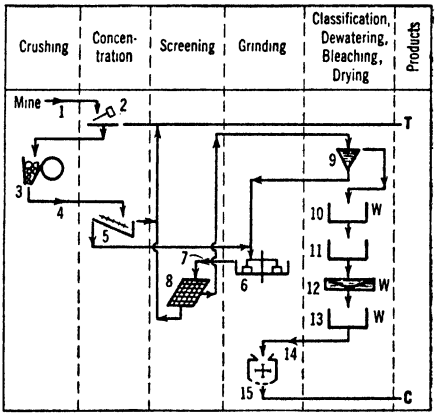

12. 3 @ 10×19-ft. washers, continuous decantation. Leave just enough acid so that iron sulphate gives a slight blue with potassium ferrocyanide.
13. 2 @ 10×2 1/2-ft. settling tanks.
14. 15% moisture; storage tank with agitator; 1 @ 3×8-ft. wrought-iron pipe, 1.5 r.p.m., heated inside with live steam; feed to outside at top from shaking feeder 8 ft. wide at 200 r.p.m.; dried material scraped off on rising side near feed point.
15. Williams pulverizer.

FIG. 2. POINT MILLING & MANUFACTURING CO.

Summary. Rough concentration by cobbing crude, with rejection of waste. Residue crushed and concentrated by log-washing. Concentrate wet-ground, acid washed, dried, and cake disintegrated by hammer-milling.

Thompson-Weinman Co., Fig. 3.

Location: Cartersville, Ga.
Ore: Barite and chert in loose clay and soil.
Capacity: 60 tons white barite per day.

Legend for Fig. 3:

1. Tram line from mine.
2. Grizzly, 7 steel rails 12 ft. long spaced 3 to 4 in.
3. Cobbing.
4. Double-log washer.
5. 1 @ 3×5-ft. trommel, 0.5- to 0.75-in. holes.
6. 1 @ 2×30-ft. picking belt.
7. 1 @ 4-cell Harz jig, 1/8-in. screen.
8. Rejigging.
9. Storage bins, +92% $BaSO_4$.
10. Bucket elevator.
11. Trommel, 1-in. aperture.
12. Picking belt.
13. Jaw crusher, 1-in. set.
14. Log washer.
15. Rolls, set 1/2-in.
16. Log washer.
17. Rotary drier.
18. Raymond mill; 200-m. product.
19. 4 @ 7×7-ft. bleaching tanks, lead- and brick-lined.
20. 10(diam.)×17-ft. washing tanks.
21. Live-steam drum drier.
22. 1 @ 8/8-in. trommel.
23. Picking belt.
24. 1 @ 4-cell Harz jig.

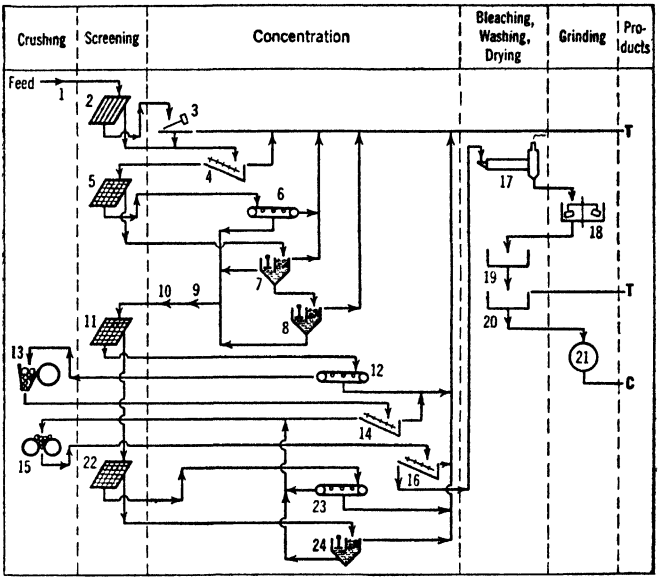

FIG. 3. THOMPSON-WEINMAN CO.

Legend for Fig. 3 on page 7.

Summary. Seven-stage concentration by cobbing, hand-picking, log washing, and jigging at sizes starting at 4-in. and finishing at <3/8-in.; tailing discarded at each stage. Concentrate dried, dry-ground, leached, washed, and again dried.

New Riverside Ochre Co., Fig. 4 (*148 A 277; 143 #10 J 62*).

Location: Cartersville, Ga.
Capacity: 100 t.p.h.
Water: 800 g.p.m. new; 1,700 g.p.m. total.

Legend for Fig. 4:

1. 10 @ 5-cyd. dump trucks.
2. Grizzly, 4-in. spacing; mounted above (3). Waste hand-picked; ore broken through.
3. 1 @ 30-ft. 2-log washer.
4. 1 @ 6-ft. trommel with 2-in. and 1-in. rd. apertures.
5. Rolls.
6. Elevator.
7. Picking belt.
8. Simplex bowl classifier. Sands about 13% $BaSO_4$.
9. 2-deck Hum-mer screen, 5/8-in. and 14-m. apertures.
10. 4 @ 4-cell Harz jigs, 180 @ 1 1/2- to 1-in. s.p.m., 9-in. beds.
11. 2 banks of 4-cell jigs, 260 @ 3/4-in. s.p.m., 9-in. beds.
12. 3-cell jigs, fed from fourth cells of (11).
13. 2 Fahrenwald sizers.
14. 7 shaking tables, triplex Plat-O for the first spigots, single Plat-O with rubber decks and wood riffles for others. 280 r.p.m. Recirculation of middling decreased tailing assay from 10% barite to 7% from feeds ranging from 40 to 70% $BaSO_4$. Concentrate tonnage from 7 tables is 25 to 45 t.p.d., according to feed assay.

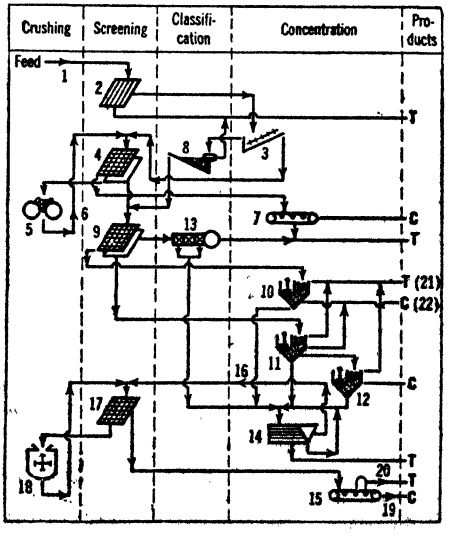

FIG. 4. NEW RIVERSIDE OCHRE C

Legend for Fig. 4—Continued:

15. 1 @ 20-in. and 1 @ 30-in. Stearns magnetic separators.
16. Stockpile; screw conveyor; 30-in.×30-ft. gas-fired drier. Material ranges from 1 to 6% Fe.
17. 1 @ 12-m. Hum-mer screen.
18. Hammer mill.
19. 0.7% Fe irrespective of Fe content of feed (16).
20. Average assays: 45% Fe and 25% $BaSO_4$.
21. Screened on 3-m.; oversize used for company roads; undersize sold for asphalt sand.
22. Sent to magnetic plant when desired for glass ore.

Power: About 200 hp. consumed.
Ratio of concentration: About 8 : 1.
Products: Low-grade, 92% $BaSO_4$, 5% Fe (for drilling mud); lithopone grade, >96% $BaSO_4$, <1.0% Fe; glass ore, 98% $BaSO_4$, <0.3% Fe; tailing, 8 to 10% $BaSO_4$.

Summary. Four-stage concentration beginning with roughing by hand-picking at 4-in., first finished concentrate by hand-picking at 2~1-in., jigging at 1-in. to 14-m., and tabling of classified <14-m. sands.

National Lead Co., El Portal plant, Fig. 5 (*142 #1 J 33*).

Location: El Portal, Calif.
Crude: Barite and witherite with quartz and calcite.
Product: 300-m. ground barite (little witherite), principally for drilling mud.

Legend for Fig. 5:

1. Mine cars.
2. Grizzly, 12-in. aperture; oversize sledged through.
3. Bin; plate feeder.
4. 1 @ 14×38-in. Blake crusher, 2-in. open setting.
5. Belt conveyor; bin; 3,000-ft. tramway; 1/2-ton buckets (24 t.p.h.); terminal bin; rotary feeder.
6. Inclined fixed screen, 1-in. aperture.
7. A parallel flow from another mine, comprising an 8×16-in. jaw crusher, 2-in. open setting, joins here.
8. 1 @ 2-ft. standard cone crusher, 3/4-in. set.
9. Conveyor.
10. Trommel, 7/8-in. holes.
11. Bins, 3 belt feeders.
12. 2 @ 1-compartment and 1 @ 2-compartment Harz jigs in parallel.
13. Drag classifier.
14. Sand wheel.
15. Mill bin; rotary feeder.
16. 1 @ 8-ft.×36-in. conical mill, light load of <1 1/4-in. punchings. Pulp density maintained at 3.4 floats waste out rapidly.
17. 1 compound trunnion trommel, 3/16-in. and 30-m. screens, on mill (16).
18. 1 @ 7(diam.)×4×21 2/3-ft. bowl-rake classifier.
19. Trommel, 50-m.
20. 14-m. screen.
21. 9×30-ft. thickener; heated to about 80° F. to increase settling rate.
22. 2 diaphragm pumps; preheating and mixing tank.
23. 2 @ 5×15-ft. rotary steam-heated film driers.
24. Screw conveyor; bucket elevator.

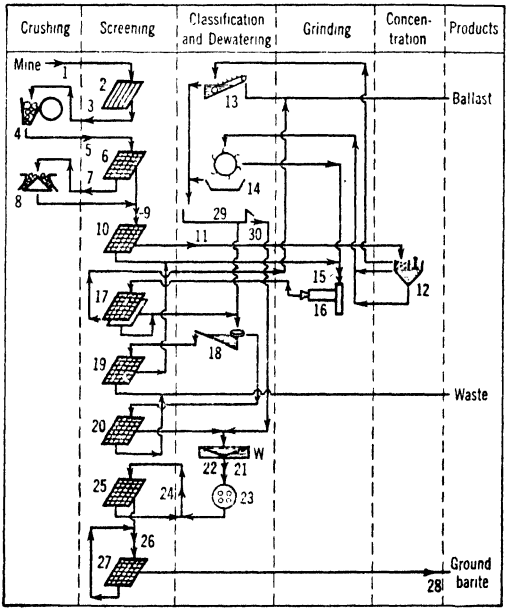

25. 1 @ 10-m. Rotex screen.
26. Screw conveyor; 3 @ 500-ton storage tanks; screw conveyor; bucket elevator; hopper with disk feeder; screw conveyor.
27. 1 as (25).
28. Bucket elevator; screw conveyor; packer bin and packer (100-lb. sacks); hand trucks; R.R. cars.
29. Settling trough.
30. 200-m. chip screen.

FIG. 5. NATIONAL LEAD CO., EL PORTAL PLANT.

Summary. Concentration by jigging at <7/8-in. and by sink-float separation in the grinding mill (Fig. 5, item 16).

4. BENTONITE

Properties. Bentonites are fine-grained, plastic clays, composed principally of montmorillonite or beidellite. TYPE 1, of which the Black Hills bentonites are characteristic, swells enormously when wetted; TYPE 2, sometimes called SUB-BENTONITES, swells no more than ordinary clays. High-grade bentonite will absorb 5 times its weight of water and swell to 15 times its dry bulk. With 18 to 20 parts of water it forms a thin sol, and in concentrations as low as 1 : 5,000 most bentonites remain dispersed for months.

Uses. Type 2 bentonites are used chiefly in oil-well drilling muds, or for making acid-treated bleaching earth. In 1939 it was found that they were preferable to Type 1 for certain kinds of foundry work. Type 1 is used chiefly in foundry and molding sands, to a lesser extent for oil-well drilling, in still smaller quantities in a variety of industries as a suspending, spreading, thickening, adhesive, or paste-forming agent; and to some extent as a detergent and as a lubricant. See also *TP 609 USBM* for a list of minor uses; also a description of evaluation tests.

Occurrence. The Black Hills deposits worked are 2 to 4 ft. thick, close to surface; the bentonite contains 25 to 45% moisture. Other bentonite and sub-bentonite deposits are typically thin-bedded; some spread over wide areas, others are lenses of no great extent. Underground mining is handicapped by the sticky and sometimes almost fluid nature of the water-soaked bentonite strata.

Production in 1925 was 2,500 short tons; in 1937, 194,768 tons, valued at $1,500,758, was produced in the United States, of which slightly over half was Type 1 and came chiefly from South Dakota and Wyoming. Except for a small amount in British Columbia, there is no commercial production of Type 1 outside of the United States. Type 2 is produced principally in Texas, Mississippi, California, Arizona, Oklahoma, and Utah; deposits in Arkansas, Kentucky, Tennessee, and other states have been investigated but not worked extensively. Italy began to exploit deposits of white bentonite in 1938.

Selling. Powdered bentonite, in bags, f.o.b. Black Hills plants, sold at $30 a short ton and upward from 1923 to 1927, later declined to $11 to $13, and the price for air-floated f.o.b. Chicago in 1938 was $25 a ton. Dried, coarsely crushed bentonite was quoted at $7 to $8 a ton, in bulk, or $10 in bags, f.o.b. Wyoming, in the same year. The usual commercial grade is powdered, 90 to 95% <200-m. (dry sieve) and is packed in 100-lb. bags. Some uses require 99% <300-m., which costs up to $40 or $50 a ton. Sub-bentonites are mostly sold crude, at prices ranging from $2 to $5 or more f.o.b. mines, according to location.

Treatment. Bentonite is ordinarily dug by hand and hauled by trucks to processing plants, often 10 to 15 mi. distant. It is dried in rotary driers to 8% moisture; temperature is held to about 480° F., as the gel-forming properties are injured by temperatures above 750° F. The dried material is quite friable. It is crushed to about $^3/_8$-in., usually in rolls driven at different speeds to cause tearing; special cutting boxes are also used. Thereafter it is ground, preferably by attrition, using ball mills, slug mills, rod mills, or roller mills. COST of crushing and drying alone is reported as high as $3 per ton.

5. BITUMENS (SOLID, NATIVE)

Occurrence and properties. The principal minerals are: (1) native asphaltites such as gilsonite, grahamite, and glance pitch (MANJAK), distinguished by their hardness (about 2 Mohs) and relatively high fusing point (230° to 600° F.); (2) native asphaltic pyrobitumens, such as wurtzilite (H = 2 to 3), distinguished by infusibility and comparative insolubility in carbon disulphide (CS_2); (3) mineral waxes, such as ozokerite, distinguished by high content of crystallizable paraffins; it is related to MONTAN WAX, which is a product of extraction of certain German lignites; (4) native asphalts, containing varying amounts of inorganic matter, distinguished by comparative absence of crystallizable paraffins; lake asphalt (SP. GR. 1.4, HARDNESS 1 to 2, SOFTENING POINT 183° to 189° F.) contains 54 to 56% bitumen, 38.5% colloidal clay and silica, and 4% combined H_2O; MALTHAS is an asphaltic liquid that exudes from crevices of rocks in oil regions. Albertite is a dense, lustrous bitumen; and (5) bituminous rock, which is sandstone or limestone containing 2 to 12% or more of asphalt. Bituminous sands are also reported.

Uses. The two best grades of gilsonite, SELECT and JET ASPHALTUM, are used principally in the manufacture of varnishes and japans, printing and rotogravure inks. Ordinary or STANDARD GILSONITE, also known as SECONDS, is used for storage-battery boxes and other molded articles, brake linings, tile and mastic, sealing compounds, insulation, and wood stain. Weathered gilsonite is used in roofing felts and rubber compounds. Wurtzilite, commercially ELATERITE, is used in paints and for protective coatings, electric insulation, and in rubber. It is insoluble and refractory and must be converted into KAPAK (wurtzilite asphalt) by prolonged heating under pressure before use. Ozokerite is used principally for wax candles, petrolatum, electrical insulation, wax ornaments, and waterproofing. After refining it is known as CERESIN. Lake asphalt is used extensively for paving, roofing insulation, and paints, but petroleum asphalt, i.e., the bituminous residues from distillation of petroleum, is a strong competitor. Bituminous rock is crushed, pulverized, and fluxed with petroleum asphalt for paving.

Material with more than about 10% asphalt may yield a surplus for use in floor tiles, plastic planks, roofing felt, etc.

Production of domestic bitumens, both native and manufactured, is given in Table 4. Bituminous rock asphalt has been produced mainly in Kentucky and Texas, to a less extent in Oklahoma, Alabama, Utah, and California; other native bitumens only in Utah. Production of Trinidad asphalt averaged 222,000 short tons a year from 1920 to 1929. Venezuelan production was 77,042 tons in 1924, declining to 7,421 in 1932, when it ceased. Both deposits are owned by an American company. Imports into the United States rose from 113,417 long tons in 1920 to 141,052 tons ($1,138,898) in 1927, then declined to 20,000 to 25,000 tons in 1937–38. Natural asphalt and related bitumens have also been produced in Italy and Germany, in minor amounts possibly also in France, U.S.S.R., Spain, Japan, and Turkey. Bituminous rocks occur in many countries. In 1938, imports of Cuban grahamite rose to 3,826 short tons valued at $65,344.

Table 4. Production (tons sales) of bitumens in the United States
(*Minerals Yearbook*)

	1920		1929		1937	
Gilsonite	56,204	$548,776	54,987	$1,235,920	38,038	$ 973,007
Wurtzilite	*a*	*a*	200	30,000	133	10,621
Ozokerite			290	133,400		
Grahamite	9,940*a*	133,998*a*				
Bituminous rock	132,353	531,134	748,550	4,071,173	447,213	2,035,410
Total native bitumens	198,497	$ 1,213,908	804,027	$ 5,470,493	485,384	$ 3,018,038
Manufactured asphalt:						
Domestic petroleum	700,496	11,985,457	1,650,387	18,227,795	2,476,454	25,478,565
Foreign petroleum	1,045,779	14,272,862	2,238,255	25,661,639	1,555,499	17,515,872

a Wurtzilite included with grahamite in 1920.

Selling. Since 1925 the average value of all bitumens, f.o.b. mine shipping point, has been a little above $20 a ton ($22.77 in 1938). Wurtzilite sold in 1931 for $90 a ton, dropped to $79 in 1935–37, and to $77.90 in 1938. Ozokerite is higher-priced. The average value of imported grahamite in 1938 was about $17 a ton, f.o.b. Cuban shipping point.

The average value of petroleum asphalt at refineries in 1938 was $9.24 a short ton, compared with $15.04 in 1920. The average reported value of the imports of lake asphalt from Trinidad was $10.50 in 1938, compared with $8.86 in 1920. Variable proportions of crude and refined asphalt may alter these comparisons, but the inference is that Trinidad costs have risen while refinery prices have come down. Solid and semisolid asphalt (less than 200 penetration), made from domestic petroleum and used for paving only, averaged $14.75 in 1920 compared with $8.33 in 1938.

Treatment. Utah gilsonite is simply hand sorted and bagged for shipment. Crude wurtzilite, however, is refluxed under pressure at 500° to 580° F., which results in reduction of the material to a plastic mass; this upon further heating becomes KAPAK. Cuban grahamite is hand picked and sacked either in crude form or after steam refining. Trinidad asphalt is an emulsion of bitumen, water, mineral and vegetable matter; it is dehydrated locally in steam-heated open tanks or sent to the United States for refining.

6. BORATES

Occurrence and properties. The principal minerals are natural borax ($Na_2B_4O_7 \cdot 10H_2O$), kernite or rasorite ($Na_2B_4O_7 \cdot 4H_2O$), colemanite ($Ca_2B_6O_{11} \cdot 5H_2O$), ulexite ($Na_2 \cdot Ca_2B_{10}O_{18} \cdot 16H_2O$), sassolite ($B_2O_3 \cdot 3H_2O$), boracite ($5MgO \cdot MgCl_2 \cdot 7B_2O_3$), and priceite, a lime borate. The Kramer district, Kern County, Calif., dominates the market; here borates mixed with some clay occur over a wide area in tabular beds, 85 to 100 ft. thick. Searles Lake brines yield borax as a joint product with potash and other salines.

Uses. Few substances have so diversified applications (see Schaller: *IMR*); the principal outlet is in porcelain enameling which, with glassmaking, accounts for nearly 75% of domestic consumption. It is also used extensively in cleaning preparations for homes and laundries; in pharmaceutical preparations, paper, textiles, and tanning. Boric acid is used in eye-washes, for hair-waving, and in other ways.

Production. California produces upward of 90 to 95% of the world's annual output of borates. Domestic production, in terms of refined borax, was 358,898 short tons valued at $7,232,897 in 1937, of which 40% was exported. In 1920, world output barely exceeded 150,000 short tons, of which the United States furnished 120,320 tons, Chile 17,445, and Turkey 13,986, with minor amounts from other South American countries. Italian production is between 5,000 and 6,000 tons. Minor amounts of borates are produced in nearly every continent.

Selling. Refined borax, formerly priced at $800 a ton, has recently been valued at about $20 a ton, f.o.b. California plants. The New York quotation in 1938 was $46 to $51 a ton, delivered, in bags. Minor quantities of crude minerals are marketed occasionally, but prices depend upon private negotiation. Shipments of granular borax are made chiefly in bulk, or in bags, but barrels, kegs, and other containers may be used.

Treatment. At KRAMER, Calif., borax and kernite are mined together because the granular borax particles assist in grinding the fibrous kernite. The mixed borates, after being ground, are calcined to remove water and then most of the clay is removed by screening and air separation before shipment to Wilmington, Calif., for further refining by chemical methods. The borates are dissolved in hot water and, after separating insoluble impurities, borax is recovered from the leach liquor by crystallization. At the WILMINGTON refinery the cleaned ore is leached, leaving clay and most of the impurities in a sludge; the solution is filtered, cooled to speed up separation of crystals, and the crystals are centrifuged out, dried, and screened. Boric acid is obtained by acid treatment of borax. At SEARLES LAKE, Calif., the production of various salts from mixed brine is essentially one of evaporation followed by fractional crystallization, borax being one of the last to separate. In Italy, the recovery of B_2O_3 is a step in a complex process whereby volcanic steam is utilized first as a source of power and then is made to yield not only boric acid but CO_2 and NH_3 as well (*52 CM 520*).

When colemanite was a leading source of borates it was concentrated mechanically before refining, by calcining and decrepitating mine-run product, crushed through 3/4-in., in rotary kilns at 1,470° F., screening on 24-m. shaking screens, and removing clay from the colemanite-rich undersize by pneumatic tables or air classifiers. Oversize, comprising ulexite and gangue (shale, limestone, etc.), was ground to 25-m. and wet-concentrated by Harz jigs and tables, since the calcined ulexite is only slightly soluble in cold water and is somewhat lighter than the gangue.

For floatability of borax minerals see Sec. 12, Art. 52.

7. BRUCITE

Occurrence. Brucite, $Mg(OH)_2$, contains 69.1% MgO compared with 47.6% in raw magnesite. Hardness is 2.5; sp. gr. 2.4. It usually occurs associated with magnesite in serpentine and dolomite.

Uses. The only important outlet is for furnace refractories, largely to increase slag resistance of dead-burned dolomite. Small quantities have been used in petroleum refining and for making Mg compounds. Some massive material is carved into ornaments. It is a potential source of metallic Mg.

Production. Some thousands of tons of brucite is produced annually from the deposit near Luning, Nev., but production figures are not available.

Selling. No published quotations are available; the Nevada mine is operated by the principal consumer.

Treatment. THE CANADIAN BUREAU OF MINES (*43 CIMM 481*) reported tests on a brucitic limestone containing 20 to 35% brucite as disseminated granules; it was found possible to recover the brucite by calcining, hydrating the calcined material to convert the lime to hydrate, leaving the calcined brucite in its original granular form, and separating it from the lime by screening and washing, thus saving both products.

8. CHALK AND WHITING

Properties and uses. True chalk is soft, friable, fine-grained, light-colored limestone, consisting essentially of calcareous shells of minute organisms; WHITING is the finely divided product obtained by grinding crude chalk or ordinary limestone or marble; PRECIPITATED CHALK or calcium carbonate is chemically prepared, often a by-product, but certain precipitated grades are simply finely ground and water-floated, *i.e.*, precipitated from suspension, not solution. Great quantities of chemically precipitated $CaCO_3$ are thrown away in the manufacture of basic magnesium carbonate from dolomite. Recently the paper industry has found it worth-while to reclaim the $CaCO_3$ formed in soda-pulp making for use as a paper filler, partly displacing china clay.

Whiting is consumed chiefly in the paint industry (about 50%), rubber manufacture, and in putty; further quantities are used as filler in oilcloth, linoleum, window shades, and cigarette papers; as a pigment or extender in white ink, white shoe dressings, picture-frame moldings, dolls, and dyes; in tooth pastes, medicines, fireworks, explosives, and wire insulation; and as a neutralizing agent in fermentation and general chemical processes.

In paints and calcimine, the physical requirements are more important than the chemical; fineness, strength and workability are important also to the rubber trade; the putty trade is interested mainly in plasticity, oil absorption, and oil retention, as well as fineness. Color is a factor in most uses. Even rubber makers, however, specify nearly pure $CaCO_3$. Alkalinity is important in dentifrices, toilet, and most chemical uses; the *p*H value of all whiting is greater than 7.8, but for precipitated whiting it runs up to 8.3 or even 9.6, which is sufficient to cause saponification in putty. The best test

of whiting for putty is a simulative service test of several months. Ceramic whiting should contain under 0.25% Fe_2O_3, 2.0% SiO_2, and 0.1% SO_3; it is further graded according to $MgCO_3$ content. Good bulk density or fluffiness is characteristic of good chalk, but probably the property that best distinguishes true chalk from ordinary limestone is its amorphous character.

Occurrence. Crudes must be substantially pure. The European chalk-cliff crudes contain flint balls which are readily separable by cobbing. The United States crudes, found chiefly in the Middle-Central and Southern States, are mostly mixed with too much clay or sand to be classed as commercial.

Production. Formerly virtually all whiting used in the United States was ground in seaboard mills using crude chalk imported from England, France, Belgium, and Denmark. Before 1914, such imports, chiefly from England, ranged from 100,000 to 150,000 tons or more annually, and as much as 2,000 tons of ground whiting or PARIS WHITE was also imported. The wider use of precipitated chalk and of limestone flour as a whiting substitute was a World War development; subsequently the importation of true chalk has remained stationary or declined, averaging less than 100,000 tons a year. Production of precipitated whiting, chiefly for the paper industry, has increased greatly, possibly to as much as 75,000 or 100,000 tons per year. Large increases have occurred in the use of whiting substitute, sales of which were 125,000 tons in 1929 and 194,080 tons in 1937; the gain in this product is largely due to its use in rubber mixtures, but also to displacement of imported chalk.

Selling. English or French crude chalk is valued at about $1.25 per long ton, f.o.b. mines. The four grades of chalk whiting are (1) COMMERCIAL, (2) GILDERS, (3) EXTRA GILDERS, and (4) PARIS WHITE. Even the cheapest grade was quoted around 1¢ per lb. prior to 1932, but by 1934 it had dropped below 0.6¢ Extra gilders and Paris white may be priced up to 1 1/2 times as much as commercial grade. Dry-ground commercial limestone (99.75% <300-m.) during the 1930's has remained nominally quoted at 1/2¢, less $2 freight allowed, or about $8 per ton, f.o.b. mills. Wet-ground limestone costs a little more; the putty grind sells for about 3/4¢ per lb. For chemically precipitated chalk for pharmaceutical trade, there are five grades worth about 3¢ per lb.; most important is the light or medium-light grade used in toothpastes.

Treatment. Chalk whiting made by the older English method is water-ground in edge-runner or stone-drag mills, after flint pebbles are removed by hand, and then classified in a series of tanks. The products in each of the four final tanks are further settled, and the sludges remaining after siphoning off the clear water are filter-pressed, dried, pulverized, sieved, and bagged. Modern equipment for wet-grinding includes rolls, Mueller grinders, and pebble mills; bowl or cone classifiers and hydro-bowls are used for classification; and thickeners, continuous filters, and rotary driers for dewatering. The cheaper dry process employs impact pulverizers, roller mills, ball mills, or air-swept tube mills, with air separators. Silex- or porcelain-lined mills and flint pebbles are used for grinding ceramic grades. Much of the whiting made from marble or limestone rock is wet-ground in pebble mills, which yield a better product than dry-grinding; the sediment in settling tanks, containing 50% H_2O, may be sprayed on steam-heated drum driers. A 4×10-ft. drum, revolving at 2 1/2 r.p.m. and using 75-lb. steam, will dry 8 to 12 tons in 24 hours. Regrinding to break up cake is done in impact pulverizers. Precipitated whiting is made by blowing CO_2 into milk of lime or as a by-product, especially in paper mills where soda ash is causticized with CaO.

Hessle Whiting plant (*44 #5 RP 53*), at Hull, Yorkshire, England, grinds 3 t.p.h. of pure, white chalk, arriving with 12 to 25% moisture. Head-size quarry rock is broken to <1/2-in. in a hammer mill; dried to 0.5 to 1% moisture in a direct oil-fired rotary drier at 240° F. outlet temperature; and ground in a standard 3-roll high-side Raymond mill discharging to a cyclone collector.

9. CLAY

Occurrence and properties. Commercial clays are mixtures which contain not only aluminum silicates but quartz, mica, and usually other minerals. Important commercial distinction is made between primary or residual clays and secondary or transported clays. Most of the best of pottery kaolins are primary; many are iron-stained. Transported clays are mostly water-borne, but some are glacial and others wind-formed deposits (LOESS). Clays laid down in large lakes, broad estuaries, or bays are likely to be well-sorted. Owing to the precipitating action of salt water on colloids, marine clays are the finest-grained but usually are so contaminated with minute quartz and other mineral grains that they are less valuable than relatively poorly sorted river and lake clays. Refractory clays are commonly found immediately below coal seams (Carboniferous).

Kaolinite ($Al_2O_3 \cdot 2SiO_2 \cdot 2H_2O$) is the essential constituent of kaolins, ball clays, refractory underclays, and certain flint clays, but it is not present in all clays; it is more refractory than other clay minerals such as beidellite, montmorillonite, halloysite, and hydromica (sericite). Dickite and nacrite are identical with kaolinite in composition but differ somewhat in optical properties. Excepting pigments, bleaching clays, bentonite, and certain other highly plastic clays, almost no clay will sell for more than about $3 per ton unless it is white or will fire white. A rough test for whiteness is to rub the powder on high-quality calendered paper such as is used in better-class magazines. Particle size, plasticity, and firing behavior also affect the value. Texture is essentially the same thing as particle size; nothing >160-m. can be considered clay. Whiteness is greatly improved by fine particle size

(<2-μ). Binding power is closely related to plasticity; so-called LEAN CLAYS lack this property, either because they contain sand or lack some specific characteristic ingredient or structure. Sedimentary clays generally are more colloidal than domestic primary clays and tend to have more "retention" (in paper mats), a property that has grown to be highly important as increasing proportions of clay are used in book and other fine papers.

Uses. About 60% of domestic sales of kaolin are for paper-making; this industry also uses part of the imports of English clay; more than 10% is used in rubber; about 10% in ceramics (though pottery makers buy mostly foreign clays); almost 10% in refractories; nearly 5% for making white Portland cement; and over 5% in various industries, chiefly as a filler. BALL CLAYS, which are highly plastic, and strong clays (often containing lignite) are used in white earthenware, porcelain, tile, and other products as a binder for china clay and to impart plasticity. FIRE CLAYS, most of which are infusible below about 3,000° F., are used mainly for refractories but find employment in other products as well. For making common brick and other heavy-clay products, a great variety of relatively low grade clays are used. Considerable amounts of special adsorptive clays are used as decolorants in refining lubricating oils.

Production. From 10 to 15 million tons of clay in the United States and huge tonnages elsewhere are dug and used annually by the producers of brick, tile, sewer-pipe, and other heavy-clay products. Only high-grade clays are marketed in substantial quantities in the raw state. Except for a moderate business in fire clays, international trade in clays is confined to the exports of high-grade china and ball clays from Cornwall and Devon. The output of English clays rose to a peak of 965,206 long tons in 1913, but this record was not equaled again until 1937 because the United States, which formerly took more than one-third of the English exports, developed a large kaolin industry in Georgia, South Carolina, and Florida, and eventually came to supply most of its ball-clay needs from Kentucky and Tennessee. Pennsylvania also produces kaolin and is by far the largest producer of fire clay; Ohio, Missouri, Kentucky, and California are other large producers of fire clays, and these are produced in smaller quantities in a score of other states. Ordinary and common-brick clays are produced in almost every locality where demand for the products justifies the existence of a plant. See Table 5.

Table 5. Salient statistics of the merchant-clay industry of the United States, excluding bentonite and fuller's earth, in short tons (*MY*)

	1909–13	1925–29	1930–34	1937
Domestic clay sold by producers:				
Kaolin, china clay	132,114	453,618	431,932	732,282
Ball clay	63,371	116,127	70,299	121,470
Fire clay	1,771,667	2,898,576	1,487,364	2,785,344
Miscellaneous clays	414,814	575,708	305,973	403,522
Total domestic:				
Quantity	2,381,966	4,044,029	2,295,568	4,042,618
Value	$3,736,487	$13,918,171	$7,533,910	$14,207,306
Imports:				
Kaolin, china clay	261,266	339,014	140,888	146,523
Common blue and Gross-Almerode	19,763	12,130	11,306	38,549
Other clay	33,259	61,048	24,713	17,946
Total Imports:				
Quantity	314,288	412,192	176,907	203,018
Value	$1,873,096	$3,715,725	$1,528,039	$1,920,891

Selling. Notwithstanding substantial improvement in quality, the average prices of domestic kaolin declined from above $8.50 a short ton in the late 1920's to $5.75 in 1932, rising to $7.31 in 1937. In 1937, however, a leading producer quoted paper clays at $7 to $30, the latter price representing a specially processed coating clay. The harsh kaolins used only for refractories ranged in value from $1 to $4 a short ton, f.o.b. Georgia mines; paper-filler clays from $6.50 to $10; and paint or linoleum clays, from $6.50 to $9. South Carolina paper clay sold mostly around $7 or $7.25, rubber clays slightly higher. Typical quotations for English clays delivered at United States Atlantic ports ranged from $14 to $25 for paper clays and $18 to $25 for pottery clays, including freight (say $3.50) and duty ($2.23) in 1937. Ball clays range upward from $6.75 a ton. The long-term trend for fire clay has been definitely upward, the 1937 average being $2.71 *vs.* $1.39 in 1913. Shales and surface clays for common brick, although rarely sold, are worth around 5¢ per ton in the ground, if well-situated; prices for common brick vary according to locality and market conditions, but the general range is between $10 and $20 per M. First-quality firebrick costs about $50 per M. Roughly 3 tons of clay is needed per M brick.

Treatment. COMMON CLAYS, such as are used for heavy-clay products, and most fire clays, will not stand the cost of beneficiation beyond the limits of selective mining, thorough mixing (and blending, if necessary), plus, possibly, crushing or screening out pebbles. Shales are crushed, pulverized, screened, and either PUGGED (wet-ground or TEMPERED)

for soft- or stiff-mud products, or they are dry-ground and dampened for semi-dry press products. BRICKS may be molded by hand, but mechanical methods are almost universal. Soft-mud bricks are wiped or pressed wet into individual molds. In the stiff-mud process, the clay paste is forced through a die as a ribbon which can be cut transversely into brick sizes, usually by a wire. Green brick rough-shaped by either process may be re-pressed to exact dimensions, usually after partial drying. Dry-pressing is used mainly for floor and wall tile but has been adopted by many firebrick makers and is gaining ground in other branches of the ceramic industry. Although brick may be dried in the open air, modern clay-products plants have artificial driers, usually of the car-tunnel type. Various kilns may be employed for burning products; common brick may even be piled up to form their own kiln (SCOVE KILN), arched spaces being left at the bottom for the fire and the outer courses being laid close and sealed with mud to retain heat. For soft common brick, the minimum firing temperature is close to 900° C., the average for ordinary brick being perhaps 1,050°; for vitrified brick the temperature is higher and heating must be continued longer. Fire-clay brick are burned at 1,250 to 1,400° C., and a few special products require up to 1,640° C.

KAOLINS, being usually sandy, are commonly beneficiated. Dry processes seemed to be displacing wet methods for a while, and are still indicated where only a little moderately coarse grit needs to be removed. Wet methods, owing to the cost of removing large quantities of water, cost more but are more flexible, yield finer grades of product, and are more selective. With froth flotation, even the clay minerals themselves can be separated from one another (Sec. 12, Art. 53).

FILLER CLAY and many RUBBER CLAYS are satisfactorily prepared by dry hammer-mill pulverization followed by air separation. Blue dye may be added to bleach paper clays, and low-temperature calcination under oxidizing conditions, followed by chlorination, has been used to improve whiteness without destroying the colloidal properties sufficiently to diminish retention.

In a SOUTH CAROLINA plant (*30 #4 PQ 69*) rubber clays are air-dried to 15% moisture, passed through a slugger-roll crusher, and reduced to 1/2 to 2 1/2% moisture in rotary driers (requiring about 40 lb. coal per ton of clay). Raymond 5-roller mills with Whizzer separators grind the product to 99.9% <200-m. This plant is so arranged that the whiter clays can be wet-processed for paper and ceramic use, by crushing such clay in a duplicate slugger roll, blunging in a pug mill, and sending slurry to Hum-mer screens, which reject all >200-m. Clay for certain uses is bleached chemically on its way to a thickener, the sludge from which is filter-pressed. Filter-cake contains 25% moisture and is pugged before going to the drier, where moisture is reduced to 3%.

Soft kaolins that disintegrate rapidly in water may be dispersed in log washers, beaters, or other simple blunging devices, and the grit settled out in troughs and tanks, with or without supplementary screening. Water suspensions or SLIP carry only 3 to 8% clay and can be thickened to not more than about 25 or 30% solids. Pressure filters require up to 150 lb. per sq. in. on the pumps and the cake often carries 30% moisture. Before drying, filter-cake may be pugged or passed through an auger machine to form hollow cylinders or other shapes that can be dried quickly on steam racks or in car-tunnel or rotary driers. Long-established practice in CORNWALL depends upon hydraulicking to obtain dispersion. The clay-sand stream there is run through sand pits or boxes before being pumped out of the pits, which are often quite deep; the remainder of the coarse sand is dropped in a series of riffled troughs or sand drags before flowing into the MICA TROUGHS, which are 1 to 2 ft. wide, about 9 in. deep, slope about 1 in. in 50 ft., and are arranged in batteries so that the slurry flows slowly for a distance of 250 ft. or more. At SPRUCE PINE, N. C., hydraulically mined slurry was raised to surface in bucket elevators, sand wheels were used to eliminate pebbles and coarse sand ahead of the mica troughs, but hydraulicking was being abandoned in 1937–38 because it failed to provide a uniform flow of material. The modern plants at HARRIS CLAY CO. are shown in Figs. 6 and 8. Developments in clay washing include tube-mill disintegration, using pebbles or rubber-covered balls or rods; wet-process micropulverizers (*A TP 744*); use of electrolytes with careful *p*H control for dispersion and flocculation; bowl classifiers and hydroseparators; centrifuges, cataphoresis (electric deflocculation and precipitation); and hot-spray-chamber drying. Sodium silicate seems to be more efficient than Na_2CO_3 for deflocculating and dispersing clay; subsequent coagulation with alum is possible only when water is not reclaimed, as even a small amount of residual alum reduces greatly the benefit derived from the use of deflocculants. In GEORGIA, coating clays are treated in solid-bowl continuous centrifuges with or without an electrophoretic attachment. Iron may be reduced by running the slip through the Frants Ferrofilter or by chemical treatment with SO_2 and zinc.

Harris Clay Co., Lunday plant, Fig. 6 (*Tref M4-B22; 16 Bul ACerS 387*).

Location: Spruce Pine, N. C.
Crude: See Fig. 7.

Summary. Disintegration in a lightly loaded pebble mill; primary separation of clay and sand in a rake classifier; concentration of classifier overflow by screening and final

Legend for Fig. 6:

1. Trucks; bin; vibrating feeder.
2. 1 @ 8-ft. conical pebble mill; sodium silicate added as a deflocculating agent.
3. 1 @ 4-ft. rake classifier.
4. 1 shaking table.
5. 1 @ 4×5-ft. trommel, 200-m. cloth.
6. 1 @ 4×5-ft. trommel.
7. 1 @ 24-ft. hydro-bowl classifier.
8. 1 @ 14-ft. hydro-bowl classifier.
9. 2 @ 4×5-ft. vibrating screens (run stationary).
10. 1 @ 60-ft. thickener; sulphuric acid added as a flocculant.
11. 2 filter presses.

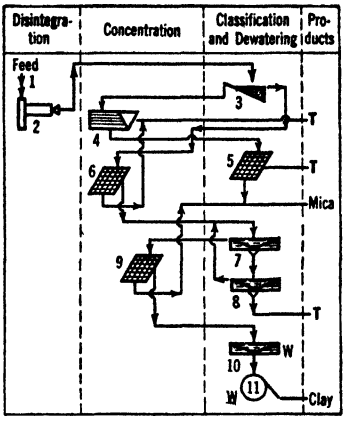

FIG. 6. HARRIS CLAY CO., Lunday plant.

concentration by two-stage hydro-bowl classification, with clean-out of mica on a fine screen.

Carolina China Clay Co., Fig. 7 (*144 #1 J 52*).

Location: Mitchell Co., N. C.

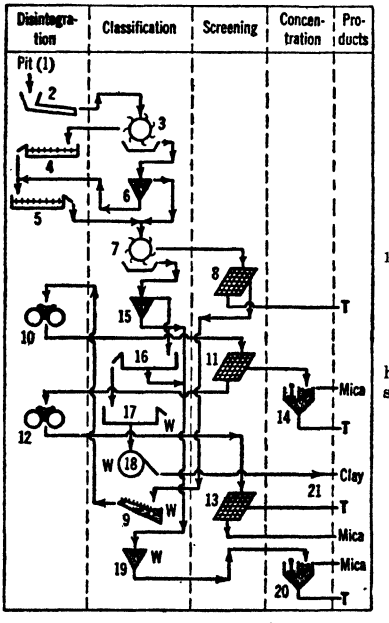

Legend for Fig. 7:

1. Hydraulic mining to pit of 30-ft. bucket elevator.
2. Wooden flume a few hundred feet down slope.
3. Sand wheel.
4. Blunger.
5. Blunger.
6. Small sloughing-off tank.
7. Sand wheel.
8. Rotary screen, 1/4-in. longitudinal rods spaced 1/4-in.
9. Dewatering drag.
10. Rolls.
11. Rotary screen, 6-m. cloth.
12. Rolls.
13. 3-ft. (diam.) trommel, 8-m., with terminal 1 ft. having 4-ft. diam. and submerged at bottom for washing sand from oversize mica.
14. 1 @ 5-cell Harz jig; mica overflow.
15. Sloughing-off box.
16. Settling troughs.
17. Settling tanks.
18. Filter presses.
19. Dewatering tank.
20. 1 @ 5-cell Harz jig, 1/2- to 1-in. stroke.
21. Drying racks.

FIG. 7. CAROLINA CHINA CLAY CO.

Summary. Separation of clay from sand and mica by disintegration in water and sedimentation; separation of sand from mica by crushing the sand and sizing and jigging.

Kaolin, Inc., Fig. 8 (*45 #9 RP 40; 142 #7 J 56*).

Location: Spruce Pine, N. C.

Ore: High-grade potash feldspar, flint, kaolin, and muscovite mica. Mica ranges from 1/2-in. to 325-m. See Table 6.

Capacity: 400 t.p.d. of crude; 1 t.p.h. of mica, max.; kaolin, 60 tons per 24 hr.

Products: Concrete aggregate, flint and hard feldspar; quarts sand; kaolin; mica (see Table 6).

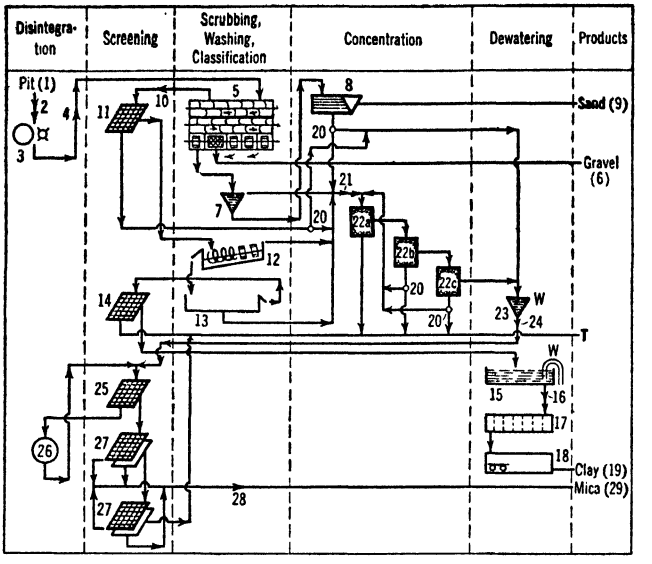

Legend for Fig. 8:

1. Drag scraper in pit; hopper.

2. 1 @ 18-in.×450-ft. conveyor.

3. Bartlett & Snow roll disintegrator, 25-hp. motor; knives on smaller roll; one roll only driven; run dry.

2 parallel sections, each as follows:

4. 1 @ 16-in. inclined belt conveyor; 1 @ 40-ton steel bin.

5. Special blunger, 7 ft. deep, 18 ft. long, 10 ft. wide at feed end, 7 1/2 ft. wide at sand-discharge end; divided longitudinally into 3 compartments by vertical partitions and the third compartment divided transversely into 5 compartments. Compartments 1 and 2 carry logs with 30-in. curved knife blades mounted radially; shafts are adjustable vertically. Compartment 3 carries a through shaft, parallel to the logs, on which are mounted sand wheels in the first three and the fifth subcompartments, and a trommel in the fourth, having an outside spiral. Feed enters at one corner of compartment 1; water with a dispersing agent enters at the diagonally opposite corner of the machine into subcompartment 3–5. Clay overflows midway of the side of compartment 1. The trommel in subcompartment 3–4 discharges >4-m. through the side of this compartment; <4-m. is pushed into subcompartment 3–5 by the trommel spiral and after washing in 3–5 is discharged by the sand wheel therein.

6. Stockpiled; part sold locally for concrete aggregate.

7. Deister cone-type hydraulic classifier, 6-m. split.

8. 1 Plat-O table.

9. 1 @ 16-in. belt conveyor; storage bin, part sold, balance wasted.

10. <20-m. mica, <50-m. sand.

11. 3 @ 3×6-ft. single-deck Niagara screens, 50-m. or 70-m. stainless-steel cloth.

12. Sand reel comprising a 5×25-ft. tank with sloping bottom and a spiral and 3 sand wheels on the shaft; the final wheel lifts out sand.

13. 4 @ 4 1/2(deep)×7×30-ft. sand boxes in parallel, fed alternately for 5 to 7 hr. or until sand and mica begin to overflow.

Streams joined

14. 5 @ 5-ft. rotary screens in parallel, 200-m. aperture; oversize is wood chip with a little mica.

15. 8 @ 57,000-gal. wooden settling and decantation tanks; flocculant added; discharged at 30% solids.

16. 3 @ 27,000-gal. fir mixing tanks.

17. 12 @ 24×24-in. Crossley filter presses; cake, 70% solids.

18. Tunnel drier, 170° F., 22 hr.; dried cake, 5% moisture.

19. 1,250-ton covered stockpile; tunnel conveyor to car-loading bin; shipments run about 7% moisture.

20. Alternative.

21. 4 feeds run separately; 7,500-gal. tanks provided for thickening and storage of settlings during runs of table concentrate and screen oversize.

22. 1 @ 8-cell 42×42-in. M-S subaeration machine for feed from (12) and (8); 1 @ 6-cell No. 18 Special Denver Sub-A machine for feed from (13) and (11). *a* = 4 cells of M-S and 3 of Denver;

FIG. 8. KAOLIN, INC.

Legend for Fig. 8—Continued:

b = 2 cells, each machine; *c* = 2 cells of M-S and 1 of Denver. REAGENTS reported: DuPont 243, Armour amines, Armour F (soap), pine oil, sodium silicate, soda ash.

23. Dewatering tank; sand, 70% moisture.

24. Fletcher batch centrifuge to 30% moisture; storage bin with screen feeder; 54-in.×30-ft. Louisville steam-tube (260° F.) rotary drier, product 1% max. moisture; Rotoclone dust collector on drier shaft.

25. 1 vibrating screen (scalping), 10- or 20-m.

26. Prater pulverizer.

27. 1 @ 2 1/2×7-ft. and 1 @ 2 1/2×10-ft. 2-deck Rotex screens.

28. Oversizes separately to Howe flour-mill bagger.

29. Usual sizes are Nos. 40, 60, 80, and 160; 16 to 20 lb. per cu. ft.

Summary. Blunging, washing, and screening to separate kaolin from mica and granular siliceous minerals; screening and tabling to separate coarse and sandy granular minerals from mica; flotation to separate finer mica and quartz.

Table 6. Distribution and mineral analysis of products at Kaolin, Inc.

No. *a*	Material	Distribution		Mineral analyses							
				Quartz		Mica		Feldspar		Kaolin	
		% of total	T.p.d.	% of product	T.p.d.	% of product	T.p.d.	% of product	T.p.d.	% of product	T.p.d.
2	Crude kaolin *b*.....	100.0	400	39.5	158.0	14.6	58.6	7.0	28.0	17.0	67.8
6	Blunger gravel.....	1.5	6	60.0	3.6	10.0	0.6	20.0	1.2	10.0	0.6
5 to 7	Blunger sand.....	30.0	120	87.0	104.4	7.0	8.4	5.0	6.0	1.0	1.2
11 to 23	Vibrating-screen mica	2.0	8	10.0	0.8	86.0	6.9	.....	.....	4.0	0.3
12 to 22	Sandwasher sand....	9.0	36	60.0	21.6	5.0	3.6	20.0	7.2	5.0	3.6
14 to T	Revolving-screen oversize.....	0.5	2	.....	.....	33.3	0.6	.....	.....	66.7	1.4
13 to 22	Sandbox settlings....	20.0	80	40.0	32.0	33.0	26.4	20.0	16.0	7.0	5.6
19	Kaolin *c*.....	15.0	60	.....	.....	.....	.....	.....	.....	.....	.....

a Corresponding to Fig. 8.

b 21.9% water = 87.6 t.p.d.

c 0.15% > 200-m., 0.85% 200~325-m., > 20-μ, 5.9%; 20~15-μ, 1.4%; 15~10-μ, 3.7%; 10~5-μ, 17.9%; 5~3-μ, 13.3%; 3~2-μ, 11.1%; 2~1-μ, 11.7%; <1-μ, 35%. SiO_2, 46.2%; Al_2O_3, 36.4%; Fe_2O_3, 0.6%; TiO_2, 0.04%; ZrO_2, 0.08%; MgO, 0.42%; CaO, 0.37%; K_2O, 0.58%; Na_2O, 0.10%; ignition loss, 13.3%.

10. CORUNDUM AND EMERY

Occurrence and properties. Corundum (Al_2O_3) ranks among natural substances next to diamonds in hardness, but the step from diamond to corundum is far greater than that comprised in the remaining eight steps in the Mohs' scale. HARDNESS (= 9) varies slightly, sapphire being hardest and other varieties grading down to emery which is 8. SP. GR. ranges from 4.1 to 3.9. Fine clear crystals of corundum are gemstones: ruby (red), sapphire (blue), oriental emerald (green), and topaz (yellow). They occur in placers and in deeply weathered residuals. Common corundum is opaque and is used chiefly as an abrasive. It occurs as BLOCK or massive corundum and as SAND or small irregular grains. Magnetite, apatite, biotite, garnet, and tourmaline are common accessory minerals. Gem corundum has a conchoidal fracture, but the common variety has a prominent basal parting and cleaves easily, producing smooth flat surfaces.

EMERY is an intimate mixture of granular corundum and magnetite, with some hematite; it is usually reddish black. Greek (Naxos) and Turkish emery ordinarily contain 60 to 70% or more Al_2O_3 and only a fraction of a per cent. of MgO; Spanish emery is mixed spinel (pleonaste hercynite) and magnetite with variable quantities of corundum, or even none at all. It is usually a heavy, fine-grained aggregate with the corundum appearing as dark gray crystals; it often shows alteration to mica. FELDSPATHIC EMERY is a similar mixture containing 30 to 50% plagioclase instead of spinel. HARDNESS is 2.7 to 4.3. It is usually magnetic and breaks with a moderately regular fracture. Domestic emery deposits, mostly spinel, are in mica schists, pegmatites, or complexes of igneous rocks, but the best Naxos and Turkish emery occurs as pockets and lenticular masses in crystalline limestones and residual red clays.

Uses. About 70% of the corundum sold in the United States, which is the world's largest consumer, is used in grinding wheels (usually admixed with artificial abrasives); about 30% is used for lens grinding, polishing rock specimens and gems, etc. Corundum was used formerly instead of bauxite concentrate for a specially fused alumina abrasive. Imported emery is used in grinding wheels, emery paper and cloth, and for glass polishing and beveling. Domestic emery, which is softer, is used mainly in pastes and compositions.

Production. Most natural corundum comes from South Africa, which produced a maximum of 5,996 short tons in 1926. U.S.S.R. is an important producer, although

Russian statistics may include emery. India, Southern Rhodesia, and Namaqualand have reported spasmodic exports, generally small in recent years. Domestic production since 1929 has been confined to a small output from the Peekskill region, N. Y., amounting in 1937 to 320 short tons valued at $2,780.

Emery comes principally from Greece and Turkey, with increasing amounts from U.S.S.R. and very small amounts from the United States and Germany. In 1926 Greece produced 27,000 long tons out of a world total of perhaps 38,000 tons. Recently the world total has been less than 30,000 tons, of which Greece has produced 8,000 to 12,000 tons and Turkey and the U.S.S.R. each about 8,000 tons.

Selling. The principal barrier to large use of natural abrasives is the difficulty of maintaining uniform quality, in the face of the uniform character of the artificial product. South African corundum has a small domestic market because of special suitability for certain uses, comparative cheapness, and efficient marketing combined with government certification of grading of all export shipments. GRADE A is over 92% Al_2O_3; B, 90 to 92; C, 85 to 90; and D is under 82% Al_2O_3. Each grade of crystal corundum is further subdivided according to size as COARSE (>1/2-in.), MEDIUM (1/2~1/4-in.), FINE (1/4~1/8-in.), MIXED or C/4 GRADE (>1/8 in., guaranteed plus 85% Al_2O_3). Titanium, more than any other impurity, seems to harden and toughen corundum grains so that the grains in grinding wheels become dull, instead of fracturing to new sharp cutting edges. Grains finer than 1/8-in., sometimes called CONCENTRATES, sell at lower prices than crystal. Average prices of BOULDER corundum in South Africa are usually below $20 per short ton; crystals cost about $38 per ton locally and $60 and upward delivered in the United States.

Greek and Turkish emery are shipped in lumps ranging up to 25 lb.; the material is crushed and graded by 5 mills in the United States into 12 sizes of COARSE-GRAINED (6- to 46-m.), 12 sizes of FINE-GRAINED (54- to 220-m.), and 4 FLOUR grades from F to FFFF; finer dust is prepared for optical work. Emery containing higher percentages of corundum is desired for grinding wheels; a more friable product is preferable for polishing and for pastes. Recent quotations have been $10 per short ton for first-grade American crude ore, f.o.b. New York, or $16 delivered to grinders; and $30 to $40 a ton (350-lb. bags) for Turkish and Naxos, delivered to grinders. American grain has been steady at 4 1/2¢ and foreign grain at 6 to 7¢ per lb., f.o.b. grinders. In 1936 and 1937, Naxos emery was priced as follows, ex-warehouse at Syra: first-quality, large lumps (over 640 gm.), £4 12s.; small lumps (80 to 640 gm.), £4 6s.; second-quality, £4; and fragments (chips), £3 13s., all per metric ton.

Treatment. South African corundum, from scattered alluvial deposits yielding as little as 5% workable crystal, is concentrated by shoveling against an inclined stationary screen (@ 3/4-in. aperture), shaking oversize in hand-screens to cause the corundum crystals to collect at the center, whence they are picked out by hand. Undersize goes to rockers with 1/8-in. sieve, undersize of which is rejected and oversize is scrubbed in a hand-worked rotary pan. Mixed lumps are tumbled dry by hand in a half-filled barrel until adhering waste is knocked off, then screened. Final grading is performed at a central buying depot. More drastic cleaning is obtained quickly in a commercial plant by passing ore (>1/8-in.) through a 10-ft.×18-in. steel pipe in which beater blades revolve at high speed.

Mechanical milling was attempted in South Africa some years ago to obtain marketable concentrate from low-grade boulder corundum and other reef deposits. Marundite and micaceous plumasites failed to yield suitable concentrate owing to difficulty of separating the flaky minerals, biotite and margarite. Feldspar-plumasites, though rarely containing over 40% corundum, were more amenable to treatment. One of the early mills made the mistake of crushing with stamps, thereby sacrificing the yield of more salable coarse and intermediate grain sizes. The flowsheet of a mill which was built in 1930 and closed down the following year is shown in Fig. 9.

South African Corundum Co., Fig. 9 (*Bul 6 Geol Surv. So. Af. 50*).
Location: Bandolier Kop, North Transvaal.

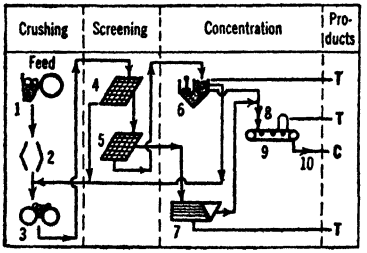

Legend for Fig. 9:

1. Jaw crusher, 2 1/2-in. set.
2. Disk crusher, 3/4-in. set.
3. Rolls, 1/8-in. set.
4. Wet trommel, 8-m.
5. Wet trommel, 16-m.
6. 3 @ 3-compartment Harz jigs.
7. 5 shaking tables; 2 Deister, 1 Wilfley, 1 James, 1 curvilinear, in parallel.
8. Hot-plate drier.
9. Magnetic separator.
10. <80-m. dust and fines removed by wet classification or dry-screening.

FIG. 9. SOUTH AFRICAN CORUNDUM CO.

Summary. Crushing to 8-m., jigging 8~16-m., tabling <16-m., and treating dry concentrates on magnetic separator.

Canadian mills (*Bul 675 CMB*) used jigs and tables to produce 55% concentrates from 10.5% ore; were dried and separated magnetically, then reconcentrated on Wilfley tables or air jigs and

given final magnetic treatment and resizing on vibrating screens before bagging. Concentrate ran 90 to 95% Al_2O_3; total costs of production were about $40 a ton. Tailing from the old CRAIGMONT mill (*Ed. 1, p. 112*) ran 4 to 6% corundum; it was treated later in a new mill, regrinding though 14-m., classifying closely, and wet-tabling to get rough concentrate for further treatment in the old grading mill.

Greek and Turkish emery is hand-sorted and sledged to size, sometimes assisted by heating and quenching in water. In the United States it is broken in jaw crushers, a series of rolls to $^3/_{16}$-in., and ball mills in series. In dry mills mica is separated by dropping the ball-mill product down a chute against an uprush of air; other mills wash the crude grain in hardwood mullers of Chilean-mill type, the overflow from which is passed through a series of long settling troughs. Trough settlings are shoveled out, dried, and screened into 3 or 4 grades of flour; the finest flour grades are made by settling the overflow from the troughs in tanks. Washed grain is sized in troughlike shaking screens into about 30 different sizes. (See Art. 1.)

11. CRYOLITE

Occurrence and properties. Cryolite (Kryolith) ($3NaF \cdot AlF_3$) is a snow white to icelike mineral easily cleavable into approximately cubical fragments. HARDNESS, 2.5; SP. GR., 2.95 to 3.0. It fuses at 950° C. and is insoluble in water. It occurs commercially only at Ivigtut, Greenland, associated with pegmatite minerals and various sulphides. Reserves were estimated at more than 1,250,000 tons in 1938.

Uses. Cryolite is used chiefly to form the bath for aluminum reduction furnaces; also in glass and ceramic industries (opaque glass, glazes, abrasive wheel binder, and insulators), and as an insecticide for dusting plants.

Production. The mine is owned by the Danish Government. Production ranged in the 1920's between 20,000 and 30,000 tons and in 1937 reached the record of about 50,000 tons, of which about 17,000 tons was shipped to the United States.

Selling. The Pennsylvania Salt Co. of Philadelphia and the Cryolite Mining Co. of Copenhagen handle all the raw output, the average declared value of the imports into the United States ranging all the way from $21 per long ton in 1915 to $86.25 in 1929. In 1937 crude from Greenland was valued nominally at $56.50 per long ton; refined cryolite, $160 a long ton; synthetic cryolite, $180 a long ton. Cryolite is free of duty. Three grades of refined cryolite are marketed: KRYOLITH, 98% pure, contains a maximum of 1.5% SiO_2, 0.25% Fe_2O_3, with CaO seldom over 0.1%; KRYOFLUX and KRYOCIDE contain 93 to 94% cryolite and not more than 0.75% Fe_2O_3; and the latter is more finely ground.

Treatment. Nonfluoride minerals are sorted out at the mine. The sorted ore is then screened, hand-picked, crushed through $^1/_4$-in., and passed under high-intensity magnets to remove siderite and some of the pyrite. Jigs and tables are employed to remove galena, pyrite, silica, and other minerals, concentrate is recleaned on Wilfley tables and magnets, then ground in porcelain-lined mills with porcelain balls, and air-separated to yield products of which 99% is <150-m. and 90% <300-m.

Synthetic cryolite is made from acid fluorspar, Na_2CO_3 and bauxite, the CaF_2 being first converted into HF. It competes with the natural product not only in aluminum reduction but also in enamels and insecticides.

12. DIAMOND

Properties. Diamonds are crystalline carbon; HARDNESS, 10; GEM VARIETIES have extremely high REFRACTIVE INDEX (2.42) and dispersion or "fire"; they are cold to the touch, and transparent to X-rays, whereas paste imitations are not. LUSTER is greasy and rather dull before cutting. CARBONS or CARBONADOS are opaque, imperfectly crystalline, and lack cleavage; they are much tougher than the more crystalline gemstones; have a dull, earthy LUSTER, and SP. GR. ranging from 3.15 to 3.29, compared with 3.50 to 3.52 for the best gem diamonds. Poorly crystallized diamonds of dark color, often fibrous in structure, are called BORTZ (BORT or BOART); they are intermediate in character between gem diamond and carbonados, although the name is also applied to gem-diamond crystals of inferior quality and to chips and fragments from cutting for gems. BALLAS is a globular mass of radiating crystals, exceedingly hard and tough, but exceedingly scarce.

Uses. Only transparent stones free from visible flaws are valued as gems. Pure white, or "first-water" stones, and those with good green, blue, or red tints, are most valuable. Blue-white stones also are highly esteemed, but a tinge of undesirable color, such as yellow or brown, greatly impairs the value. Carbonados were formerly used chiefly to point bits for diamond-drilling but are now increasingly used for dressing abrasive wheels and for pointing, cutting and shaping tools, while borts and even gemstones are used in diamond-drilling, the bit being studded with 50 or 60 small stones instead of 4 to 8 larger carbons. Small gem and carbon chips and powdered bort, bonded with metal, are used in circular saws, drill bits, and stone-dressing tools, and for cutting and polishing gemstones. Larger stones are used for wire-drawing dies, glass cutters, and pivots for delicate apparatus.

Occurrence. Carbonados are found almost exclusively in surface gravels in the highlands of Bahia, Brazil. Gemstones have been produced principally from alluvial deposits, but in South Africa they are also found in an altered basic igneous rock locally called

kimberlite or BLUE GROUND. Elsewhere they have been found in peridotite, but usually these stones have been too small or sparse for economic working.

Production. World production of diamonds increased from about 4,063,000 carats in 1933 to about 9,003,000 carats (1,988 tons) in 1937. The average value, f.o.b. mines, has decreased from $9.38 per carat in 1912 to $4.83 per carat in 1937. Only about one-fourth of the annual output is colorless gem material, and scarcely 5% of the total is fine, large ROUGH weighing 2 carats or more. Since the loss in cutting is about 55%, only 150,000 carats of good cut stones or, say, 100,000 fine large diamonds are added to the world's stock in a normal year. Recently the proportion of high-grade stones has been even less. About one-half the annual output is suitable only for abrasives.

About two-thirds of the quantity and three-fourths of the value of the output have usually come from the British Empire and over 95% from the African continent, but in 1937, owing to the extraordinary increase in output of the Belgian Congo, only 37% by weight and 68% of the value was from the British Empire. Brazil and British Guiana are leading non-African sources at present. British India used to be the leading source and has furnished many of the world's most famous diamonds.

The exports of Brazilian carbonados run from 10,000 to 30,000 carats yearly.

The United States is the largest consumer both of gem diamonds and abrasive diamonds.

Selling. Sizes range from microscopic grains to fist-size; the Cullinan diamond weighed over 1 1/8 pounds (3,106 carats), commercial stones average 1/4 to 1/6 carat or about 1/10-in. in diameter. Price per carat varies with size as well as with quality. The proportion of large stones is greater in India and South America than in Africa and the average quality is perhaps better. Bort of good quality retails for about $7.50 a carat. Carbonado runs from $35 to $80 a carat; around 1930 it rose to $175 a carat, which speeded substitution. Ballas usually costs about twice as much as carbonados. Averages are not particularly informative as to gemstones, however, since dealers bid on specified parcels, on the basis of the value of the cut stones that may be obtained from them. In 1938, a well-cut fine diamond, weighing one carat, was worth about $650 retail, a one-half to three-quarter carat stone of like quality was worth $350 to $400, and a 2-carat stone might bring as much as $1,500 to $2,000. Even in the United States, the average retail sale is less than one-carat, persons in the middle-income group being the principal buyers.

Treatment. Many diamonds are produced by natives using gold pans or bateas, breaking up cemented gravel with sledges, washing out mud and fines, and hand-picking the washed gravel on a flat surface. Larger alluvial-diamond operations comprise mechanical treatment (see Fig. 10), consisting essentially of stage crushing, the final stages in corrugated spring rolls with light spring pressures; roughing out upward of 95% of the feed in diamond pans; jigging closely sized grades to a bulk of about 0.1% of original feed; reconcentrating jig concentrate on grease tables; and, after removal of grease, removing magnetic sand by magnetic separation, and picking over the remaining material, grain by grain, on a stationary sorting table. Extreme care is taken throughout to guard against theft.

Blue ground weathers and crumbles enough in 4 to 18 months to release the diamonds, and this practice was formerly followed, but it has been found that the crushing scheme outlined in the preceding paragraph breaks so few diamonds that crushing is much more economical than the expensive spreading, periodic plowing, guarding, and re-collection of the feed involved in BLUE-GROUND FARMING or weathering.

De Beers Consolidated Mines, Ltd. Fig. 10 (*2 # 12 MQE 449*).

Location: Kimberly, Union of So. Africa.

Legend for Fig. 10:

1. Headframe hoppers; shaking feeders; belt conveyors with magnetic head pulleys.
2. 2 Gyrex screens, 3-in. sq. holes.
3. 2 @ 42-in. picking belts.
4. 1 @ 9K gyratory crusher.
5. 1 puddle tank.
6. 1 settling tank.
7. 1 @ 36-in. belt.
8. 1 @ 36-in. belt.
9. Bin; endless-rope car-haul; 100 loads per hr.
10. Grizzly, 2-in. spaces.
11. 1 @ 6K gyratory crusher.
12. 2 wash trommels, 1-in. aperture.
13. 2 sets coarse rolls.
14. 2 coarse pans (see Sec. 11).
15. 2 trommels, 3/4-in. aperture.
16. 2 sets fine rolls.
17. 2 fine pans.
18. 2 trommels, 1/8-in. aperture.
19. Scraper conveyor.
20. Bucket elevator.
21. Trommel, 3/8- and 5/8-in. holes.
22. Bucket elevator.
23. Trommel, 1/16-in. holes.
24. Trommel, 1/8-, 3/16-, and 1/4-in. holes.
25. Trommel, 1/16-in. holes.
26. Magnetic separator.
27. De Beers jig, 1 1/4~5/8-in. feed.
28. Grease table. (See Sec. 12, Art. 17.)
29. De Beers jig, 5/8~3/8-in. feed.
30. Safety pan, 8-ft. diam.
31. Sand cone.
32. 2 Richards jigs, <1/16-in. feed.

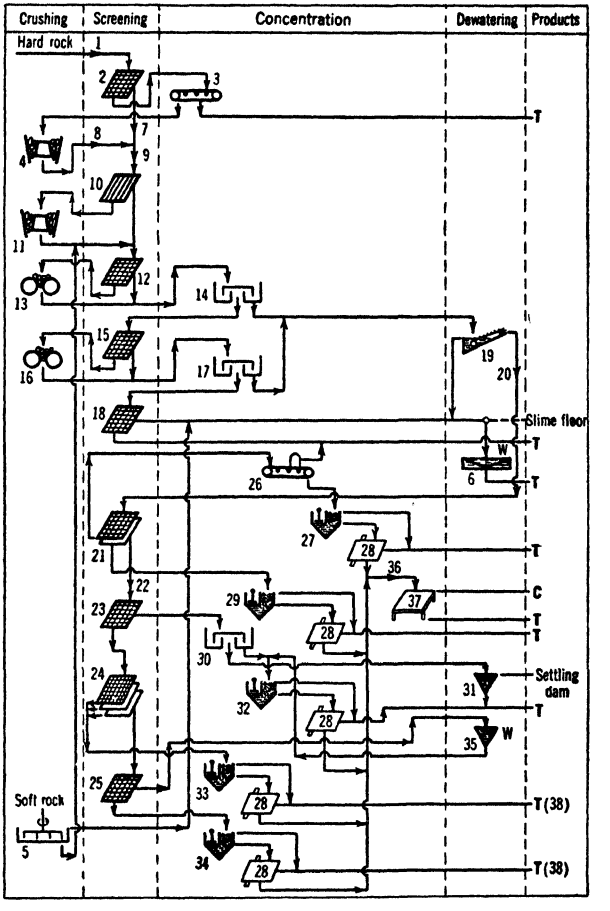

Legend for Fig. 10—Continued:

33. 3 De Beers jigs in parallel: 1 on 1/8~3/16-in.; 1 on 3/16~1/4-in.; 1 on 1/4~3/8-in.

34. 2 De Beers jigs in parallel on 1/8~1/16-in. feed.

35. 1 as (31).

36. <1/8-in. diamonds, gravel, and grease *via* grease boiler, stationary magnets (magnetic *via* ball mill) to sorting table; other sizes separately *via* grease boiler, caustic, and hydrofluoric acid washes, directly to sorting table. The remaining concentrate is principally diamond and zircon.

37. Hand-sorting table; sizes sorted separately.

38. These sizes kept separate for sale.

FIG. 10. DE BEERS CONSOLIDATED MINES.

Summary. Graded crushing in gyratories and rolls from run-of-mine to 1-in., with intervening hand-sorting of waste and separation of fines by screening and washing. Rough concentration by pan washing at <1-in. and scavenging at <3/4-in. Pan concentrate sized into 7 sizes from 1-in. to fine sand and jigged, rejecting tailing and sending concentrate to grease tables, the concentrate of which is cleaned and hand sorted.

13. DIATOMITE

Properties. Diatomite or kieselguhr consists of the siliceous remains of diatoms. Pure varieties are friable, with APPARENT HARDNESS 1 to 1.5, although the hardness of the microscopic particles is 4 to 6. SP. GR. is 1.9 to 2.35, but apparent density of dry blocks is 0.4 to 0.6 and of dry powder 0.08 to 0.25 (5 to 16 lb. per cu. ft.).

Uses, in approximate order of importance, are: filter aid, especially in sugar refining; insulation; fillers; admixture in concrete; and, in smaller amounts, in metal polishes, scouring and cleansing soaps and compounds, dentifrices, and nail polishes; as an abrasive; as a source of silica in the manufacture of water glass; in ultramarine and sundry other chemical products. For further details see *IMR 243*

Production. At least 23 countries have produced diatomite commercially and undeveloped deposits occur elsewhere. World production (1937) was over 175,000 tons, of which the United States produced considerably more than half and Denmark about one-fourth. Most of the remainder came from Germany, U.S.S.R., Algeria, and Japan; and fairly large quantities from North Ireland, Spain, Australia, Canada, Italy, and Hungary.

Selling. Diatomite products include cut blocks or brick, crushed aggregate, and powder. Diatomite brick, with clay or other binders, is made from suitably crushed and graded aggregate. Specifications for diatomite products vary greatly because of wide diversity of uses. For specialized filtration and filler uses, definite chemical and particle-size specifications may be required. For polishes, color as well as size and absence of grit may be important. Low-priced crude diatomite may be graded only on its bulk density and moisture content. Frequent practice is to submit standard samples in lieu of specifications. Diatomite products, other than crude, are rarely shipped in bulk. Packaging costs are high; even the powders may be injured in shipping. Crude diatomite is worth as little as $5 or less a ton, but admixture, insulation, and filtration grades are priced from $10 to $40 at the mines, highly purified or selected qualities as high as $100. Insulating bricks range in price from $40 to $80 per M.

Treatment. At western United States deposits the crude earth from open quarries or cuts is field-dried to some extent before being taken to the mill. Coarse waste is removed on grizzlies before primary crushing, and sand, trash, and tramp iron are removed from the crushed product in mechanical traps ahead of the secondary mills (mostly swing-hammer type) and air classifiers. The product may be the natural powder or a calcine or chemically treated product, which is redispersed or even reclassified by special mills or blowers, before bagging. In Germany water classification is practiced. The Bureau of Mines has tested separation of clay and grit from impure earth by both wet and dry methods. Bog and pond deposits in the eastern United States are dredged, the peaty mixture filter-pressed; the cakes are air-dried on racks and then calcined to remove organic matter as well as moisture.

At the FLOATSTONE Co., Wilmington, Calif. (*19 #4 PQ 83*), raw earth (75 t.p.d.) is crushed in toothed rolls, ground in a tube mill swept with hot air, in closed circuit with an air classifier, the <200-m. product of which is divided by a second classifier into <200-m. and <350-m. grades. Calcining is done, if desired, at 1,900° to 2,400° F., according to subsequent use.

Purification of diatomite experimentally by dispersion of clay with sodium silicate and removal by decantation and by flotation with low-molecular weight amines (*e.g.* amyl) is reported (*148 A 356*).

14. DOLOMITE

Occurrence and properties. Dolomite may constitute mountain ranges; many calcitic limestones have become dolomitized by the action of magnesium-bearing solutions. Dolomite, $Ca,Mg(CO_3)_2$, is a distinct mineral, but grades into magnesium limestones when the $MgCO_3$ content drops much below 45%. Dolomite and ankerite, $CaCO_3(Mg,Fe)CO_3$, are distinguished from calcite ($CaCO_3$) in that they do not effervesce freely with *dilute* HCl. SP. GR. is 2.85, slightly heavier than calcite; HARDNESS, 3.5 to 4.

Production and uses. Statistics are included under limestone; uses overlap. Many statuary marbles are dolomitic. The dolomitic limes of Ohio are often preferred for brick mortars and finishing-coat plasters, being stronger, more plastic, and having more sand-carrying capacity than high-calcium lime. Vienna lime, used in buffing compounds, is made from stone analyzing 43% $MgCO_3$. Magnesium content is also advantageous in sulphite-paper making, agriculture, and occasionally for glass making and metallurgical fluxing. "Technical carbonate" of approximate formula, $4MgCO_3 \cdot Mg(OH)_2 \cdot 5H_2O$, is made from dolomite by the Pattinson process, or a modification thereof, for use in 85%-magnesia molded insulation and also in pharmacy, rubber, paint, glass, printing inks, cosmetics, free-running table salt, toothpaste, etc. Epsom salt may be made from dolomite, often with CO_2 as a joint product. The most important distinctive use of dolomite is in refractories. Raw dolomite in rice size is used for patching furnaces; dead-burned dolomite, for steel-furnace bottoms. The largest tonnages are used in concrete aggregate and as flux stone for smelting; considerable tonnages are used for stone sand, for agricultural stone, and for dusts for various purposes.

Selling. Dolomite, at best, is a low-priced commodity. Consumers, as a rule, either own quarries or have established contractual relations which guarantee supplies. Prices approximate those of limestone.

Treatment is by calcining (see Art. 24). $MgCO_3$ lowers calcining temperature. In burning high-calcium lime the temperature may be carried to 2,200° F., but temperatures above 1,560° F. may over-burn high-magnesium lime, the resulting product being dense, discolored, and over-difficult to slake. Dolomite for refractories is dead-burned at

2,730° F., usually in rotary kilns, often after admixture with controlled amounts of other materials containing Fe, SiO_2, and/or additional Mg to stabilize the CaO. Flux stone, aggregate, and stone for burning are produced by crushing to suitable limiting sizes and then sizing to obtain the desired short-range products. Typical flowsheets are given in Figs. 11 to 13.

Tennessee Coal, Iron & R.R. Co., Fig. 11 (*139 # 9 J 29*).

Location: Dolonah, near Bessemer, Ala.
Crude: Dolomite.
Capacity: 125 t.p.h. of stone as 4 1/2~3/4-in. lump for fluxing in iron blast furnaces, and 3/4~1/8-in. screenings for bottom (raw or calcined) in open-hearth furnaces.
Building: Flat site. Steel structure substantially without cover.
Power: Transmission to plant at 44,000 volts; motors 25-hp. and up, 2,300-v.; smaller, 220-v.

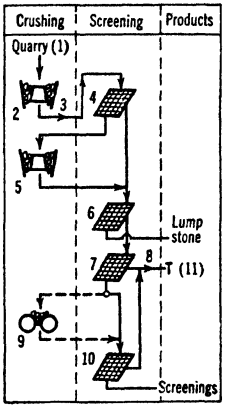

Legend for Fig. 11:

1. 3-cyd. electric shovel; 10-ton side-dump cars by steam locomotives in 5-car trains; incline, quarry cars hoisted one at a time by remote control from dump station, 350-hp. motor; dump hopper.
2. 1 @ 42-in. gyratory crusher, 4-in. closed setting.
3. Belt conveyor.
4. Vibrating screen, 2 3/4-in. sq. opening, high-pressure sprays.
5. 1 @ No. 8 gyratory crusher, 2 3/4-in. open setting.
6. 2 vibrating screens, 3/4-in. sq. openings, high-pressure sprays.
7. Vibrating screen, 0.09-in. aperture; for dewatering.
8. Sump tank and sand pump.
9. 1 @ 42×16-in. rolls, 9/16-in. set.
10. Vibrating screen, 0.12-in. sq. aperture.
11. About 15% of material quarried.

FIG. 11. TENNESSEE COAL, IRON & R.R. CO.

Summary. Two-stage open-circuit crushing in gyratories to limiting flux-stone size; screening at 4 1/2-, 3/4-, and 1/8-in. sizes for the desired products.

Valley Dolomite Corp., Fig. 12 (*33 # 10 PQ 56*).

Location: Bonne Terre, Mo.
Capacity: 300 t.p.d. clinkered dolomite.
Crude: Self-fluxing, massive, badly faulted.
Products: Agricultural limestone, clinkered dolomite.

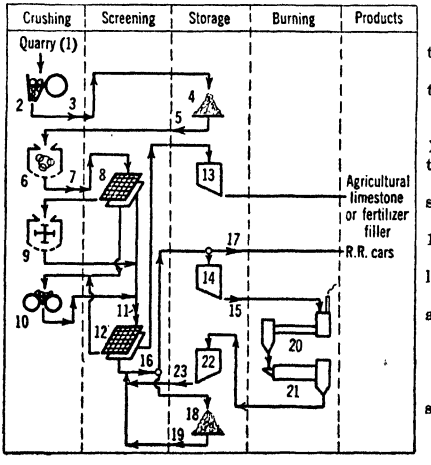

Legend for Fig. 12:

1. Diesel shovel (#75 Lorain crawler); 5 3/4-ton trucks, 1,000 ft.; pan feeder.
2. 1 @ 28×36-in. jaw crusher, 3-in. open setting.
3. 1 @ 24×76-in. belt conveyor.
4. Stockpile, 480 tons live capacity; 1 @ 30-in. ×6-ft. pan feeder. Capacity to this point 100 t.p.h.
5. 1 @ 24-in.×48-ft. belt conveyor. Capacity screening and fine crushing 60 t.p.h.
6. 1 @ 36×42-in. American ring-roll crusher, 1-in. grate setting.
7. 3 @ 24-in. conveyors, 13 1/2, 78, and 59 ft. long, in series.
8. 1 @ 4×14-ft. Symons 2-deck screen, 1-in. and 1/2-in. apertures.
9. Hammer mill.
10. 1 @ 42×18-in. Traylor rolls.
11. Elevator.
12. 1 @ 2-deck Niagara screen, 1/2-in. and 6-m. screens.
13. 1 @ 75-ton bin.
14. 1 @ 800-ton 2-compartment bin.

FIG. 12. VALLEY DOLOMITE CORP.

Legend for Fig. 12—Continued:

15. 3 belt conveyors chain driven from kilns.
16. 1 @ 18-in.×310-ft. conveyor, 3 unloading points.
17. 1 @ 70-ft. car-loading conveyor.
18. 1 @ 6,500-ton stockpile; 3/4-cyd. scraper.
19. Bucket elevator.
20. 2 @ 7 1/2×7×125-ft. and 1 @ 9 1/2×8 1/2×150-ft. rotary kilns; linings 7 ft. 70% alumina brick, 22 1/2 ft. of forsterite or magnesite, 7 ft. high alumina brick, balance cold-zone brick; fired from individual coal mills drawing hot air from coolers (21). Kiln temperatures, 2,850 to 2,900° F.
21. 1 @ 7×65-ft. and 1 @ 6×60-ft. rotary cooler.
22. 1 @ 300-ton circular and 1 @ 400-ton conical steel bin.
23. 1 @ 78-ft. conveyor.

Summary. Four-stage crushing in jaw crusher, impact mills and rolls to 1/2-in.~6-m. kiln feed; undersize to agricultural stone.

Birmingham Slag Co., Douglas Dam plant, Fig. 13 (*45 # 12 RP 54*).

Location: Douglas Dam, Tenn.
Capacity: 550 t.p.h. graded unwashed products.
Crude: Dolomite.
Products: 6~3-in. (cobbles); 3~1 1/2-in. (coarse); 1 1/2~3/4-in. (medium); 3/4-in.~4-m. (fine); sand.
Storage: Aggregate, 106,000 tons.
Distances: 1/2 mi. by 36-in. conveyor from stockpiles to dam site.
Arrangement. The successive screen-crusher units between stockpiles are placed in separate buildings adjacent the piles to which they stack; the stockpiles themselves are strung out in a line over a conveyor tunnel.

Legend for Fig. 13:

1. 3- and 3 1/2-cyd. shovels; 15 Koehring Diesel Dumptors and end-dump Autocars, 6- and 4-cyd.
2. 1 @ 42-in. A-C gyratory, 6-in. set.
3. 1 @ 42-in.×165-ft. belt conveyor.
4. 1 @ 7,000-ton surge pile, <8- or 10-in. stone.
5. 1 @ 4-ft. Jeffrey-Traylor vibrating feeder; 1 @ 42-in.×165-ft. belt conveyor.
6. 1 @ 6×12-ft. 2-deck vibrating screen, 6-in. and 3-in. apertures.
7. 1 @ 5 1/2-ft. standard cone crusher, 3-in. set.
8. 1 @ 30-in.×110-ft. Barber-Greene stacking conveyor.
9. 1 Riplflo screen, aperture ranges from 1/2-in. in dry weather to 2-in. in wet weather; scalps out clay and dirty stone.
10. Cobble (6~3-in.) stockpile.
11. 24-in. inclined belt conveyor; bin; trucks to waste or road building.
12. 1 @ 36-in.×165-ft. belt conveyor.
13. 2 @ 4×12-ft. 2-deck Riplflo screens in parallel, 3-in. and 1 1/2-in. apertures.
14. 1 @ 4 1/3-ft. standard cone crusher.
15. Coarse (3~1 1/2-in.) stockpile, 50-ft. max. height.
16. 1 @ 30-in.×165-ft. belt conveyor.
17. 2 @ 4×12-ft. 2-deck Riplflo screens in parallel, 1 1/2- and 3/4-in. apertures.
18. 1 @ 4-ft. short-head cone crusher.
19. Impact crusher.
20. Medium (1 1/2~3/4-in.) stockpile, 50-ft. max. height.
21. 1 as (16).
22. 2 @ 5×14-ft. 3-deck Riplflo screens, 3/4-in., 3/8-in. and 4-m. side by side on intermediate deck, and 5/32-in. apertures.
23. 1 @ #448 A-C Pulverator.
24. Fine (3/4-in.~4-m.) stockpile, 50-ft. max. height.
25. 1 @ 24-in.×165-ft. inclined belt conveyor.
26. 2 @ 4×12-ft. 2-deck vibrating screens, 3/8- and 5/32-in. apertures.
27. 1 @ #322 A-C Type R reduction gyratory.
28. 1 @ 24-in. belt conveyor.
29. 1 @ 6×12-ft. Hardinge rod mill; 3-, 2 1/2- and 2-in. rods, 15 r.p.m. Takes about 15% of total sand.
30. 1 @ 24-in. twin-screw washer.
31. Variable split according to sand requirements.
32. 1 @ 24-in. conveyor.
33. Screw conveyor.

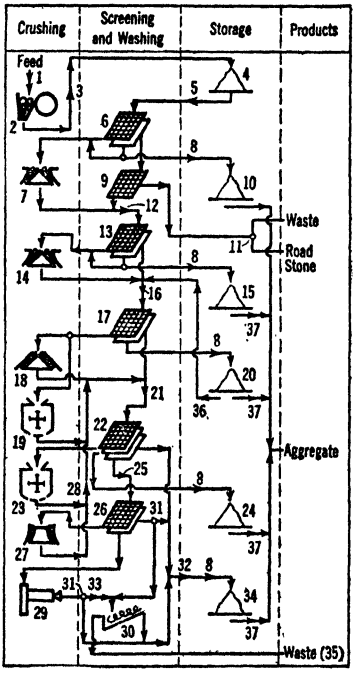

FIG. 13. BIRMINGHAM SLAG CO., Douglas Dam plant.

Legend for Fig. 13—Continued:

34. Sand storage, 50-ft. max. height; Sauerman hoist with 1-cyd. bottomless Crescent bucket for blending and moving sand. Sand specifications are: modulus 2.3 to 3.2; size range:

Mesh	4	8	16	30	50	100	200
% passing	95–100	75–90	50–70	30–50	15–30	8–13	*a*

a Not more than 60% of the 100-m.

35. Tonnage small.

36. By 24-in. conveyor as needed for additional sand.

37. 36-in. tunnel conveyor under stockpiles; to batching bins, with intermediate washing of aggregate size over a vibrating screen, if desired.

Summary. Graded crushing in 8 circuits (7 open) to produce stone and sand, after initial discard of clay and unsound stone at about $^1/_2$-in.

15. FELDSPAR

Occurrence and properties. About 60% of all igneous rocks is feldspar, but the commercial sources are granitic pegmatites. Deposits considered workable are those that yield large crystals by hand picking; most occurrences are very pockety. Commercial feldspars are intergrowths of at least two species of feldspar, chiefly the potash spars (orthoclase and microcline, $KAlSi_3O_8$) and soda spar (albite, $NaAlSi_3O_8$). Soda spars usually contain lime spar (anorthite, $CaAl_2Si_2O_8$) and there is a whole series of soda-lime feldspars called plagioclase, ranging in composition from albite through oligoclase, andesine, labradorite, and bytownite to anorthite. Perthite is an interlamination of orthoclase and albite. GRAPHIC GRANITE OR CORDUROY SPAR is an intergrowth of feldspar and quartz (characteristically in the ratio of 3 : 1); CORNWALL STONE is a natural mixture of feldspar, quartz, and kaolinite; a similar synthetic mixture, including some fluorspar, is made and marketed in the United States as CAROLINA STONE. NEPHELINE ($K_2Na_6Al_8Si_9O_{34}$) is a feldspathoid mineral occurring in coarse-textured syenitic rocks. Orthoclase is monoclinic; the other principal feldspars are triclinic; the whole group has the same HARDNESS (6 to 6.5); SP. GR. varies from 2.56 for potash spars to 2.60 for albite and 2.76 for anorthite; MELTING POINTS of the respective minerals are 1,200°, 1,110°, and 1,532° C.

Uses. In 1937, 51% of domestic sales of ground spar was for glassmaking, 37% for pottery, 9% in enamels, and 3% for miscellaneous purposes, including porcelain and other ceramic uses as well as abrasive-wheel binder, poultry grit, roofing granules, and cast stone. Feldspathoid minerals, notably nepheline syenite, albite syenites, rhyolite, volcanic ash, and even synthetic slags or wastes from certain chemical processes, may replace feldspar in glass and in pottery and enamels.

Production. The United States is by far the largest producer of feldspar. Domestic production of crude feldspar was 26,462 long tons in 1912, 236,108 tons in 1928, 117,281 tons in 1932, 268,532 tons in 1937, when North Carolina furnished 35%, Colorado 16%, South Dakota 15%, and New Hampshire 10%. North Carolina and Virginia spars are milled almost exclusively in those states or at Erwin, Tenn.; mills are also located in other leading mining centers as well as in Trenton, N. J., and East Liverpool, Ohio. Mills in Rochester, N. Y., northern Ohio, and Minnesota grind Canadian spar, much of which is shipped to the United States. European needs are supplied principally by Sweden and Norway.

Selling. Crude feldspar is sold mostly to merchant grinding mills situated near the mines or where milling-in-transit freight rates favor shipment to more than one consuming center. Prices at mills range from $2 to $7 or more a long ton; the average for all domestic crude spar, f.o.b. mine, in 1937 was $5.15. Owing to the multiplicity of products, differing greatly in chemical composition and size specifications, prices of ground feldspar vary over wide limits; in 1937 the average sales realization ranged from $7.05 per short ton in Colorado to $19.56 in New Jersey. Typical quotations f.o.b. mills in that year showed $12.50 a short ton for granular 20-m. glass spar and $17 to $19, respectively, for <200-m. potash and soda spar. Owing to freight and other charges, prices in Trenton or in Ohio points usually run $5 to $6 a ton higher than in North Carolina or New Hampshire. Western mill prices are even lower.

No definite standards exist for crude spar. The industry has accepted a commercial standard (CS23–30) published by the National Bureau of Standards, which classifies ground spar upon chemical composition and fineness of grinding. The National Feldspar Association has published a modified and less involved classification based upon use. Generally speaking, the better quality of crude spar in a given district is No. 1 and that carrying more free quartz is No. 2. Any material carrying more than about 25% quartz or badly iron-stained, if salable at all, may be called No. 3. Both No. 1 and No. 2 spar should be sufficiently free from iron to burn to a good white color, free from specks. In one district a product containing as much as 10 or even 15% quartz may be classed as No. 1, whereas in another this grade must be almost free from quartz. Dental spar is the highest quality of selected pure potash spar crystals; it commands a high premium but is marketed in very small quantities. For glassmaking, granular or semigranular spar (usually <20-m. and preferably free from dust) is prepared, low in iron (preferably 0.08% Fe_2O_3); it is desired mainly for its alumina which is higher in soda spar. Since soda is at least as acceptable as potash, nepheline syenite is coming into wide use; it sells for more per ton because it carries more alkalies and more alumina. In pottery spar, the potash-soda ratio is very important; too high soda is undesirable for most ware; cannot be tolerated for high-tension electrical porcelain or floor tile; even for general whiteware twice as much K_2O as Na_2O is

demanded. For making pottery glazes, on the other hand, a high soda spar, as low as 1 : 1, is generally specified. Low iron and good fired color are important in all pottery spar and the top limit of 20% free quartz is much reduced for better grades of ware. Most pottery spar is fine-ground, much of it <325-m., although <200-m. material is sometimes specified. Enamel spar receives an intermediate grind, usually <140-m., although all grindings from 20- to 200-m. may be specified; emphasis is placed on uniformity of composition and high potash content.

Abrasive-wheel makers may take 20 to 25% free quartz but not over 3% Na_2O; scouring-soap makers, too, want high potash spar as a rule although they are not so particular about mica as the glass or ceramic trade. Mixed products, carrying much quartz or more than traces of other mineral impurities, are difficult to sell, although they may be used for roofing granules, concrete aggregate, stucco, poultry grit, and miscellaneous abrasives and fillers.

Treatment. In Europe, feldspar is sometimes ground wet in pan mills; in the United States and Canada continuous dry grinding in pebble mills, with air separation, is standard practice. High-intensity magnets remove not only abraded iron but also biotite, garnet, tourmaline, and even some muscovite. Spar is hand sorted at the mines, forked to reject fines, and charged to the grinding mills. Mine dumps often carry 50% or more feldspar; flotation and agglomerate-tabling are both available to increase recoveries. Electrostatic separation has been tried but is not employed commercially at present. Blending of spar from different mines is common; one plant has 43 bins and additional ground storage for keeping separate 20 or more kinds of spar.

Tennessee Mineral Products Corp., Fig. 14 (*IC 6488*).

Location: Minpro (near Spruce Pine), N. C.

Crude: Raw spar from company mine and from about 60 other mines; average max. size is 6-in., some 200-lb. lumps received; bulk of fines removed. Range of typical analyses: SiO_2, 62 to 74%; Al_2O_3, 16 to 25%; Fe_2O_3, 0.06 to 0.17%; CaO, 0.2 to 4.9%; MgO, trace to 0.07%; K_2O, 13 to 12.4%; Na_2O, 1.5 to 8.2%; cone fusions, 5 to 9 1/2.

Labor: 1.9 man-hr. per ton.

Power: 48.5 hp-hr. per ton.

Distances: Motor truck and wagons, average haul for crude 6 mi., max. 18 mi.; railroad from greater distances.

Cost per ton (1929): To mixing bins (17), 43¢; blending charges at mixing bins, 9¢; fine grinding, 74¢; loading and shipping, 19¢; total $1.45. Labor, 47%; power, 31%; supplies and repairs, 16%.

Grinding costs (1929) to different sizes:

Mog.....	20	40	60	80	100	120	140	170	200	230
$ per ton.....	0.63	0.73	0.78	0.81	0.83	0.85	0.88	0.95	1.10	1.37

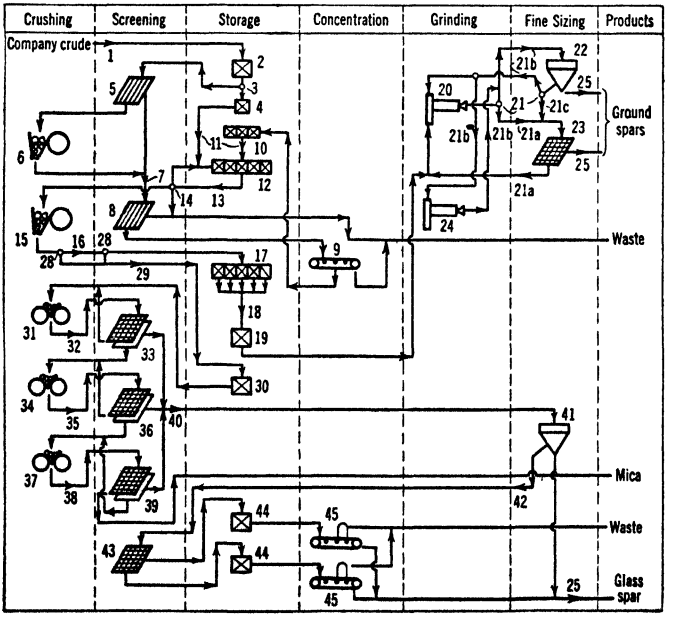

FIG. 14. TENNESSEE MINERAL PRODUCTS CORP.

Legend for Fig. 14:

1. Narrow-gage rail line, 3/4 mi., and cableway 650 ft.

2. 200-ton bin; 48-in.×10 1/2-ft. apron feeder.

3. Large pieces of No. 1 potash spar picked from feeder.

4. Small bin for spar from (3).

5. Grizzly, 4-in. spacing.

6. 1 @ 15×24-in. jaw crusher, 4-in. open setting.

7. 18-in. conveyor.

8. Grizzly, 1/2-in. aperture.

9. 1 @ 30-in.×138-ft. picking belt; 16 women and 3 men (2 cobbing) select 25 to 40 tons per 10 hr. from 70 to 80 tons feed to belt in order: first girl picks pure flint, 2 pick No. 1 soda spar; 2 or 3 pick No. 2 potash spar; one picks mica; balance pick all remaining spar (graded as No. 2 soda grade); 2 men cob at end to make No. 2 soda grade. See Table 7 for average analyses.

10. 13 @ 8-ton transfer bins chute-fed from picking-belt stations.

11. Hand tramming.

12. 43 crude-spar storage bins, 8,300-ton combined capacity. Also additional ground storage. About 20 different grades.

13. Wheelbarrows.

14. Fines dropped in forking to barrows screened on 1/4-in., undersize wasted; oversize returned to a separate bin.

15. 2 @ 10×16-in. Reliance jaw crushers, 1/2-in. set.

16. 1 @ 70-in.×30-ft. direct-heat countercurrent Ruggles-Coles rotary drier, 4 1/2-in. silex lining laid with 10 lifter courses; 5 1/2 r.p.m.; 17 lb. coke per ton; capacity 10 t.p.h. from 8% to <0.5% moisture; draft carried to remove bulk of <40-m. comprising mostly impurities; dust to 8-ft. cyclone; bucket elevator, 14-in. conveyor; swinging-chute sampler, 2% cut (sample to rolls and another swinging sampler taking 5% cut); bucket elevator; shuttle conveyor.

17. 29 @ 80-ton mixing bins. Material held in bins until analysis is completed. Drawn on charge specifications from chemical laboratory.

18. 330-lb. barrows, drawn in rotation to aid in mixing; elevator.

19. 50-ton surge bins; James automatic belt feeders.

One of three similar grinding units (20 to 27)

20. 1 @ 8-ft.×48-in. conical pebble mill, silex lining (9,100 lb.); 27 to 28 r.p.m.; 12,800 lb. 4-in. Danish pebbles.

21. Optional according to product being made; for <20-m., routing is along 21*a;* for <120-m. or finer, routing is along 21*b;* for <40- to <100-m., routing is along 21*c* with suitable limiting screen on (23).

22. 1 @ 14-ft. Gayco air classifier (20 hp. motor) for <120-m. separation and finer; see Table 8.

23. James vibrating screen; covering 20-m. to 100-m. according to product; see Table 8.

24. 1 @ 4×16-ft. pebble tube mill, silex lining, takes about half of classifier return (increases circuit capacity about 8%).

25. Parallel; 2 @ 10-in. elevators; 2 samplers; 5 @ 50-ton shipping bins.

Table 7. Average analyses of hand-picked products at Tennessee Mineral Products

Product	Percentages							
	SiO_2	Al_2O_3	Fe_2O_3	CaO	MgO	K_2O	Na_2O	Loss
No. 1 potash....	66.4	18.7	0.09	0.56	Tr.	11.5	2.63	0.16
No. 2 potash....	68.5	17.6	0.10	0.54	0.01	10.2	2.7	0.18
No. 1 soda.....	72.0	16.7	0.11	1.12	0.01	5.3	4.6	0.23
No. 2 soda.....	73.0	16.8	0.15	1.55	Tr.	1.6	6.8	0.16
Flint.....	98.3	1.1	0.03	0.36	.....	.....	.....	0.05
Mica *a*.....	45.2	39.5	.....	.....	.....	11.8	.....	4.5

a Estimated.

26. All chutes, feeders, etc., lined with silex or rubber.

27. Switch from one grind to another made by one of two following methods: (1) A neutralizer charge, of such composition that, when added in suitable proportions to the material running, will produce material of the composition desired in the following run, is started with the last part of the running charge and continued with it for the time required to displace the in-mill load. (2) Start neutralizer charge immediately after end of one charge and continue until mill discharge has an analysis corresponding to the following lot, collecting ground material separately in the interim. Method (1) is applicable when analyses of the two main charges are close together; method (2) when analyses are relatively far apart, or for charges being bagged as produced, when there is no opportunity to mix the change-over product into the entire lot. For detail of preparation and use of calibration curves for neutralizer feeding at this plant, see original article.

Table 8. Screen analyses of products, Minpro plant

Mesh	Cumulative % retained; range			
	(23) <20-m.	(22) <140-m.	(22) <200-m.	(41) <20-m.
20	0	.....	.....	0
28	0–2	.....	.....	8–17
40	1–7	.....	.....	24–55
48	3–18	.....	.....	39–75
65	9–29	.....	.....	53–88
80	.....	0–0.1	.....	.....
100	20–41	0–0.2	.....	67–95
120	.....	0.1–0.25	.....	.....
140	31–51	0.25–0.9	.....	77–96
170	.....	0.8–2.2	0–0.1	.....
200	42–62	2.5–5.0	0.3–1.1	87–97
230	.....	.....	0.8–3.5	.....
325	.....	.....	2–9	.....

Legend for Fig. 14—Continued:

28. Alternative draws for glass-spar production.
29. Conveyor; head-pulley magnet; elevator.
30. 125-ton surge bin.
31. 1 @ 22×14-in. spring rolls, 3/8-in. set, 165 r.p.m.
32. 1 @ 8-in. belt-bucket elevator.
33. 1 @ 2-deck Hum-mer screen, 1/4-in. and 20-m. screens.
34. 1 @ 20×14-in. spring rolls, 3/16-in. set, 195 r.p.m.
35. 1 as (32).
36. 1 as (33) with 8- and 20-m. screens.
37. 1 as (34), but 215 r.p.m., set close.
38. 1 as (32).
39. 1 as (33) with 10- and 20-m. screens.
40. 1 @ 14-in. belt conveyor; 1 @ 8-in. belt-bucket elevator.
41. 1 as (22), 140-m. separation; see Table 8.
42. 1 as (40).
43. Hum-mer screen, 40-m.
44. 70-ton bins.
45. Johnson magnetic-induction separators.

Summary. Two-stage open-circuit crushing in jaw crusher to about 3/4-in.; three-stage closed-circuit crushing in rolls for <20-m. glass spar; one-stage grinding in tumbling mills with circuit closed with screens and/or air classifiers for ground spars from 20 *mog* to 200 *mog*.

Consolidated Feldspar Corp., Fig. 15 (*143 #12 J 67*).

Location: Unicoi Co., Tenn.

Crude: From Spruce Pine district, N. C.

Products: GLASS SPARS, <0.06% Fe: 20C, <20-m., 40% <200-m.; 20F, <20-m., 55% <200-m; 40-m., <40-m., 60% <200-m. ENAMEL SPARS, <0.08% Fe: <40-m. as above; <120-m., 90% <200-m.; <120-m., 95% <200-m. POTTERY SPAR, <0.08% Fe: 99.7% <200-m.; 99.3% <230-m. GRANULAR, <20-m., 1 to 5% <200. SEMI-GRANULAR, <20-m., 15 to 25% <200. Chemical grades to the number of 50 or 60, to separate specifications as to size and analysis.

Capacity: From 4 or 5 t.p.h. upward according to fineness of products.

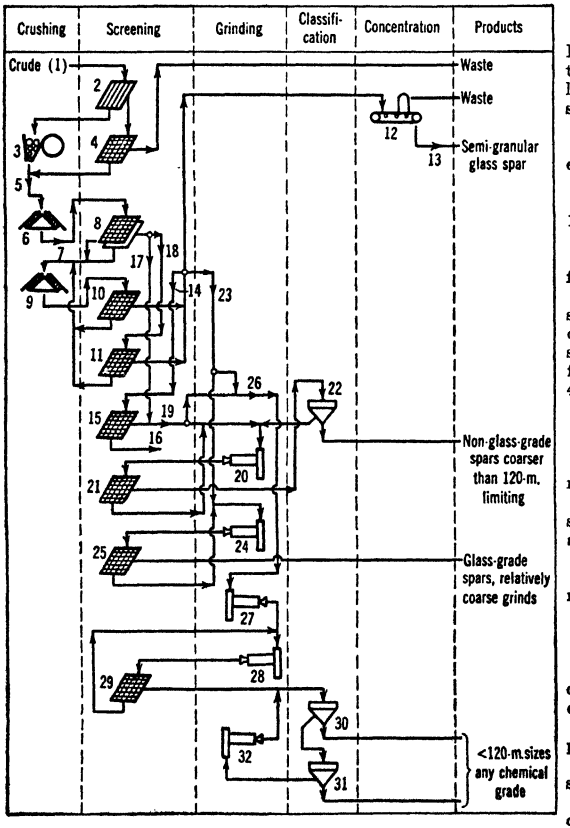

Legend for Fig. 15:

1. Shipped in by boxcar. Blended while unloading by taking successive wheelbarrow loads from different cars as desired.
2. Grizzly, 1-in. aperture.
3. 1 @ 15×30-in. jaw crusher, 1 1/2-in. set.
4. 4-m. screen.
5. Elevator; either of 2 @ 150-ton bins; vibrating feeder.
6. Short-head cone crusher.
7. Vertical baffle drier, coke-fired; elevator.
8. Double-deck Jeffrey screen; apertures depend on character of material and subsequent treatment; following is for semi-granular glass spar: 4-m. and 8-m. apertures.
9. 1 as (6).
10. 20-m. vibrating screen.
11. 2 as (10).
12. 4 Exolon magnetic separators.
13. 20-m. scalping screen; storage (30 @ 70-ton bins are available for different grades).
14. For granular spar.
15. 1 @ #400 Hum-mer, 50-m. cloth.
16. To (12).
17. For fine grinding.
18. For semi-granular spar.
19. 22 storage bins (13), drawn for desired blends to 5-cu. ft. hoppers.
20. 1 @ 8-ft.×72-in. conical pebble mill, silex lining.
21. 1 @ 40-m. Hum-mer screen.
22. 1 @ 14-ft. Sturtevant air classifier.

FIG. 15. CONSOLIDATED FELDSPAR CORP.

Legend for Fig. 15—Continued:

23. Glass-grade granular spars from storage bins (13).
24. 1 @ 8-ft.×48-in. conical mill, silex lining.
25. Hum-mer screen, aperture to give desired product.
26. Either separately.
27. 1 @ 8-ft.×30-in. conical pebble mill, silex lining.
28. 1 as (27).
29. 1 @ 40-m. vibrating screen.
30. 1 @ 14-ft. Gayco air classifier.
31. 1 as (30).
32. 1 @ 5×22-ft. pebble-tube mill, silex lining.

Summary. Three-stage crushing in closed circuit with screens to <8- or <20-m. Pebble-mill grinding in a variety of screen- and air-classifier-closed circuits to fine sizes.

American Nepheline Corp., Fig. 16 (*148 A 122*).

Location: Rochester, N. Y.
Capacity: 100 t.p.d.
Raw rock: Albite, 45 to 55%; microperthite, 7 to 22%; microcline, 8 to 19%; nepheline, 13 to 25%; muscovite, 0.3 to 3.2%; magnetite, 0.5 to 7.1%.
Recovery: About 80% of mill feed.
Product: About 24% Al_2O_3 and 0.07% Fe_2O_3. Entire output goes to glass trade.

Legend for Fig. 16:

1. Located near Petersborough, Ont.
2. Trucks carrying 1-cyd. loaded Dempster-Dumpster steel buckets.
3. Grizzly, 4-in. spacing.
4. 1 @ 15×24-in. jaw crusher.
5. Belt conveyor; 500-ton bins; 27 mi. by truck (cost $1.15 per ton); gondola cars to Genesee dock, Rochester, N. Y.; track hopper; belt conveyor; 400-ton storage bins; belt conveyor with magnetic head pulley.
6. 20×24-in. Reliance pulverizing jaw crusher; 3/8-in. set.
7. 1 @ 5×36-ft. coke-fired Ruggles-Coles drier; elevator.
8. Hum-mer screen, 8-m. aperture.
9. 1 @ 125-ton bin.
10. 1 @ 36×20-in. Traylor rolls.
11. 1 as (9); constant-weight feeder; elevator.
12. Dings magnetic drum.
13. Hum-mer screen, 20-m.
14. 1 @ 8 ft.×36-in. flint-lined Hardinge grate mill charged with nepheline-syenite blocks.
15. Screen, 50-m. aperture.
16. 2 @ 4-roll Dings high-intensity magnetic separators; feed rate 1 to 1.5 t.p.h. according to moisture content and humidity.
17. 1 @ 8-ft. Gayco air classifier.
18. 2 as (16).
19. Alternative.
20. 1 @ 8-ft.×48-in. Hardinge mill.

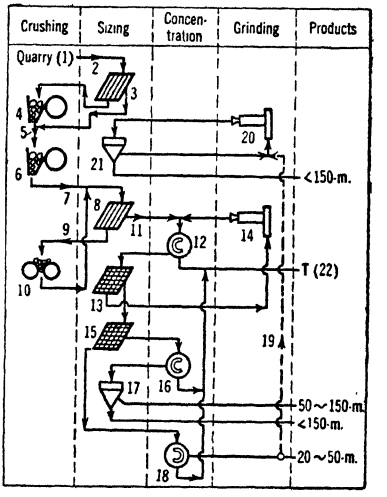

21. 1 @ 14-ft. Gayco air classifier.
22. About 20% of feed, comprising about 2% from (5) and 6% each from (12), (16), and (18).

FIG. 16. AMERICAN NEPHELINE CORP.

Summary. Reduction to <20-m. in three crushing stages and one grinding stage, all dry, with magnetic roughing in the grinding stage. Sizing to two <20-m. grades and cleaning of grades separately. Fine sand cleaned of <150-m. by air classification.

16. FLUORSPAR

Occurrence and properties. Fluorspar, or fluorite, CaF_2, is a not uncommon gangue with sulphide ores; barite is a common accessory mineral. It is transparent to translucent, frequently tinted or more deeply colored green, yellow, blue, lavender, or old rose; rare specimens may be orange to black and opaque. Crystals are commonly cubical but easily cleaved into octahedrons; SP. GR., 3 to 3.2; HARDNESS, 4; decrepitates when heated near its melting point at 1,270° to 1,387° C.; some varieties phosphoresce after moderate heating; a few show bluish fluorescence.

Uses. The principal main consumption (70 to 80%) is as flux in basic open-hearth steel making and foundries. The balance is used chiefly in manufacture of HF and chemicals or in ceramic industries (mostly for opal glasses or enameling). Smaller quantities are used in nonferrous smelting and manufacture of cement, calcium carbide and cyanamid, abrasives, heat-resistant brick, and carbon electrodes. Very small quantities are used in optical lenses and jewelry.

Production. Recent world production has ranged from 135,000 to 460,000 metric tons a year. The United States and Germany each produced nearly one-third; Great Britain, U.S.S.R., France, Italy, Spain, Newfoundland, Chosen, and China were important sources. Shipments of domestic spar in 1937 were 181,230 short tons; over 90% was from the Kentucky-Illinois field.

Selling. Commercial fluorspar is graded according to purity as ACID, CERAMIC, and METALLURGICAL SPAR. Acid manufacturers generally specify 98% CaF_2 and <1% of either $CaCO_3$ or SiO_2. For glass or enamel, fluorspar ordinarily should contain not less than 95% CaF_2 and not more than 3% SiO_2, 1% $CaCO_3$, and 0.12% Fe_2O_3. Steel makers demand 85% CaF_2, not more than 5% silica, and not more than 0.3% S, but lower grades are sometimes acceptable, especially in the West. Lead and zinc are objectionable for all uses. Acid spar is generally shipped as lump, metallurgical spar as gravel, and ceramic spar as ground. Acid-making requires finely ground fluorspar, but most manufacturers buy lump or gravel and grind it. The glass industry uses chiefly material ground 55% <100-m. and 15% <200-m. Finer ground material is used in enamels and to some extent in glass. Ground spar is shipped in bulk in paper-lined boxcars, in 125-lb. bags, or 450- to 500-lb. barrels.

Average price of domestic spar in 1909–13 was $6.39; in 1926–30, $18.49 per short ton, f.o.b. mines; in 1937, prices f.o.b. Illinois-Kentucky mines averaged about $19 for gravel and $27 for lump or ground spar, and f.o.b. western mines $13 for gravel and $17 for lump.

Treatment. Some residual deposits yield gravel spar by crushing and log-washing but most mines employ hand picking, washing, and concentration by jigs and tables. Flotation is a recent development; it yields higher-grade concentrate than gravity concentration (see Sec. 12, Art. 52). Decrepitation followed by screening has been tried at a few mills.

Hillside Fluorspar Mines, Fig. 17 (*IC 6621*).

Location: Rosiclare, Ill.

Capacity: 15 t.p.h.

Ore: Fluorite in calcite and limestone; small amounts of galena; no sphalerite: 50% CaF_2; 42% $CaCO_3$; 6% SiO_2.

Concentrate: 86% CaF_2, 13% $CaCO_3$, 0.92% SiO_2. Lead concentrate, 64.5% Pb, 5.2 oz. Ag.

Tailing (gravity): 22 to 25% CaF_2; 70% $CaCO_3$; 5 to 6% SiO_2.

Recovery (gravity): About 50%.

Ratio of concentration (gravity): 2 : 1.

Labor: 17.3 tons per man-shift.

Power: Company steam-generating plant (245 hp. connected in mill), 8.5 kw-hr. per ton.

Water: Local dam, supplemented in summer by 4,800-ft. 6-in. line from 4-in. 500-g.p.m. pump at Ohio River, total head 130 ft.; pumping cost 2.2¢ per 1,000 gal.; pumping from dam (1,000 ft.) to 15,000-gal. tank against 190-ft. head costs 3.6¢ per 1,000 gal.

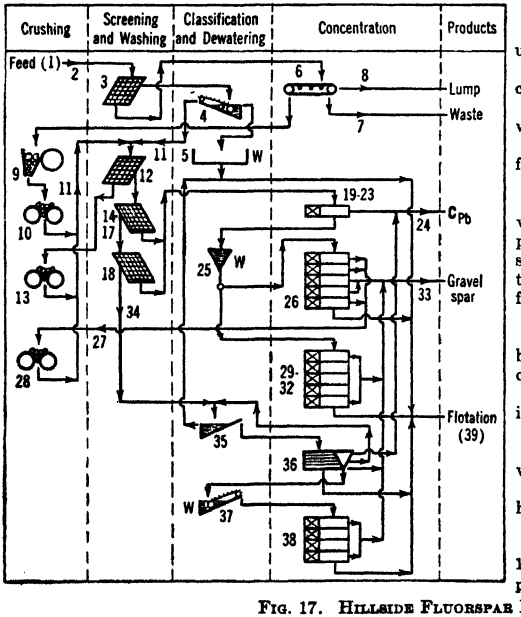

Legend for Fig. 17:

1. Sledged through 8-in. grizzly underground.
2. 100-ton head-frame bin; reciprocating feeder.
3. 1 @ 4×10-ft. revolving-screen washer, 3/4-in. screen.
4. 1 @ 14-in. belt-drag dewaterer, 25 f.p.m.
5. Settling tank.
6. 66-in. apron-type picking conveyor, divided into 3 longitudinal compartments; charged in outer 2 @ 24-in. strips, hand-picked lump thrown to center strip, waste dropped to bins; 25 f.p.m. 5 tons removed per man-shift.
7. 50-ton waste bins; cars to dump.
8. 20-in. conveyor; 250-ton storage bin; 18-in.×420-ft. belt conveyor; R.R. cars.
9. 1 @ 15×24-in. Blake crusher, 2-in. open set.
10. 1 @ 36×16-in. rolls, 3/4-in. set.
11. 1 @ 50-ton bin; 18-in. chain elevator.
12. 1 @ 4×6-ft. trommel, 5/8-in. rd.-hole jacket.
13. 1 @ 24×14-in. rolls, 5/8-in. set.
14–17. 4 trommels in series, 3/8-in., 1/4-in., 4-mm., and 3-mm. perforated plate.

FIG. 17. HILLSIDE FLUORSPAR MINES.

Legend for Fig. 17—Continued:

18. 1 @ 3×5-ft. vibrating screen, 8-m. cloth.

19–23. Richards pulsator jigs as follows:

Feed size	No. of jigs	Size, in.	Screen, mesh	R.p.m.
5/8~3/8-in.	2	12×12	3	65
3/8~1/4-in.	1	12×24	3	40
1/4-in.~4-mm.	1	12×24	4	40
4~3-mm.	1	12×24	6	50
3-mm.~8-m.	1	12×12	5	90

24. 6-chain drag, 50 f.p.m.; 4-ton bin.

25. 5 dewatering boxes in parallel, one for each jig.

26. 1 @ 5-compartment 30×60-in. Harz jig, 2-m. screens, 120–140 @ 1 1/2-in. s.p.m., taking 5/8~3/8-in. feed.

27. 1 @ 6-in. belt elevator.

28. 1 @ 24×14-in. rolls, 1/2-in. set, 83 r.p.m.

29–32. 4 Harz-type jigs in parallel as follows:

Feed size	No. of compartments	Size of comp., in.	Screen, mesh	S.p.m.	Stroke, in.
3/8~1/4-in.	5	30×36	2 1/2	150–170	1 1/2
1/4-in.~4-mm.	5	24×36	4	180–200	1 1/4
4~3-mm.	5	24×36	5	180–200	1 1/4
3-mm.~8-m.	4	18×37 1/2	5	180–200	1 1/4

33. 1 @ 24-in. belt elevator; 1 dewatering tank; 1 @ 24-in. chain drag, 50 f.p.m.; shuttle conveyor; 1,500-ton storage bin.

34. 1 @ 8-in. belt elevator.

35. 1 @ 2 1/3×14 2/3-ft. rake classifier.

36. 4 Deister Plat-O tables.

37. 1 @ 6-in. belt drag.

38. 1 @ 15×30-in. 4-compartment Harz jig, 7-m. screen, 190 @ 3/4-in. r.p.m.

39. Essentially similar to Fig. 18.

Distances: Spur of I.C.R.R. on property; trucks 1 1/2 mi. to barges on Ohio River.
Building: Gently sloping site; steel and concrete.
Cost of labor and supplies (1928): 55¢ per ton milled.

Summary. Graded crushing, hand sorting, close sizing, jigging, and tabling from 5/8-in. down; gravity tailing reground and floated.

Mahoning Mining Co., Fig. 18 (*33 # 11 PQ 39*).

Location: Rosiclare, Ill.
Capacity: 7 to 10 t.p.h.; crushing plant, 25 t.p.h., 1-shift operation.
Concentrate: Pb: 62% Pb, 7% Zn, 1 to 2% CaF_2; Zn: 63.3% Zn, 0.6% each Pb and CaF_2; acid spar, 98.5% CaF_2; metallurgical spar, 90% CaF_2.
Water: Softened.
Building: Pre-fabricated steel.

Legend for Fig. 18:

1. 70-ton receiving bin with apron feeder; 1 @ 24-in.×50-ft. conveyor.

2. 1 @ 24×24-in. jaw crusher.

3. 1 @ 24×30-in. belt conveyor; bucket elevator.

4. 1 @ 5×10-ft. Ty-rock screen, 1/2-in. cloth.

5. Belt conveyor, 30-ft.; suspended magnet.

6. 1 @ 3-ft. short-head cone crusher.

7. Conveyor; 2 @ 200-ton bins in parallel, with vane feeders and Syntron vibrators; belt conveyor; bucket elevator; 3-ton surge bin with automatic control of the vane feeders; Constant-Weight feeder.

8. 1 @ 8×6-ft. Marcy grate ball mill.

9. 1 @ 6×24 2/3-ft. duplex heavy-duty rake classifier with Adams density controller; <100-m. overflow.

10. 2-in. Wilfley pump.

11. 1 @ 7×7-ft. Denver conditioner.

12. 1 @ 38×38-in. 6-cell Denver Sub-A machine; *a* = cells 2 to 6; *b* = cell 1.

13. 1 @ 6-ft. American-type filter disk.

14. 1 @ 30×8-ft. thickener.

15. 1 as (11).

16. 1 @ 12-cell as (12); *a* = cells 5, 6; *b* = cell 4; *c* = cells 1, 2, 3 and 3 similar cells in parallel; *d* = cells 7–12.

17. 2 as (13) with porous-rubber cloth.

18. 1 @ 26×12-ft. thickener.

19. 1 as (11).

20. 1 @ 15-cell as (12), first 3 cells double-spitz; *a* = cells 1, 2; *b* = cell 3; *c* = cells 4–7; *d* = cell 11; *e* = 12; *f* = 13; *g* = 14; *h* = 15; *i* = 8; *j* = 9; *k* = 10.

21. 12-ft. Butchart thickener; 4×3-ft. drum-type filter; 4×40-ft. rotary drier, dust to cyclone to concentrate; cyclone gas to wet Rotoclone, sludge to filter.

22. 12-ft. Butchart thickener; 4×2-ft. drum filter; binder added; briquette machines; briquette drier.

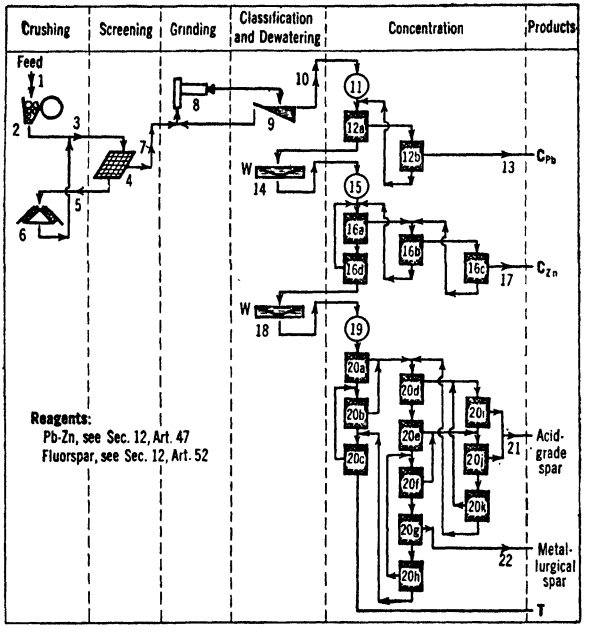

FIG. 18. MAHONING MINING CO.

Legend for Fig. 18 on page 32.

Summary. Two-stage crushing and 1-stage closed-circuit grinding to <100-m.; standard lead-zinc differential flotation followed by soap flotation of fluorspar by a complicated rougher-scavenger-cleaner-recleaner circuit making two grades of concentrate.

Continental Chemical & Ore Co., Fig. 19 (*144 # 12 J 104*).

Location: Silver City, N. Mex.

Capacity: 3 to 4 t.p.h. according to hardness.

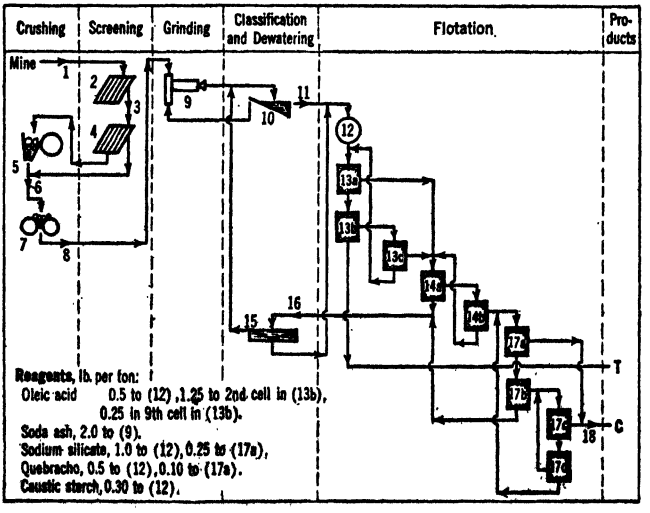

FIG. 19. CONTINENTAL CHEMICAL & ORE CO.

Legend for Fig. 19:

1. By truck and rail.
2. 1 @ 4-in. grizzly, sledged through.
3. 2 @ 120-ton and 1 @ 60-ton storage bins, hand-discharged singly or in combinations according to crude to 16-in. inclined belt conveyor.
4. Grizzly, 1-in. aperture.
5. 1 @ 10×20-in. Eureka jaw crusher, 1-in. open set.
6. Elevator.
7. 1 @ 28×14-in. rolls.
8. 1 @ 120-ton bin; adjustable feeder.
9. 1 @ 5×4-ft. ball mill, 65 to 70% solids.
10. 1 @ 4-ft. duplex rake classifier, 300 to 500% circulating load; overflow, 28 to 30% solids, 48 *mog*, 43% <200-m.; *p*H, 8.5 to 9.0.
11. 2-in. Wilfley pump.
12. 1 @ 6×6-ft. conditioner.
13. 1 @ 10-cell No. 18 Denver Sub-A machine; *a* = cells 3, 4; *b* = cells 5 to 10; *c* = cells 1, 2. Pulp density must be held above 25% solids in *a*.
14. 1 @ 6-cell 24-in. Morse-Weinig machine; *a* = cells 3 to 6; *b* = cells 1, 2. Pulp density must be held below 35% solids.
15. 1 @ 8×8-ft. thickener.
16. 1 as (11).
17. 1 as (14). *a* = cell 3; *b* = cells 4 to 6; *c* = cell 1; *d* = cell 2.
18. 1 @ 8×8-ft. Oliver filter, 12% moisture in cake.

Crude: Assay variable; a composite for which reagent composition is given on Fig. 19 assayed: CaF_2, 65.6%; SiO_2, 21.8%; $CaCO_3$, 8.4%; R_2O_3, 4.2%.
Products: See Table 9.

Table 9. Recovery and grade at Continental Chemical & Ore Co.

Material	Weight, %	Assays, %			
		CaF_2	SiO_2	$CaCO_3$	R_2O_3
Feed.....	100	69.8	25.2	2.6	2.5
Concentrate...	60	98.0	1.2	0.6	0.3
Tailing.....	40	24.4	63.3	6.1	6.0
Recovery.....	.....	86.2	2.9	13.4	7.2

Water: Pumped from well 1/4 mi. distant by 2-stage centrifugal, 140-ft. lift through 5×12-ft. Bowers zeolite softener regenerated every 18 hr. Water reduced from 18 or 20 grains per gal. Ca and Mg hardness to zero hardness. 100,000-gal. storage tank above mill.

Summary. Soap flotation at 48 *mog* with repeated cleaning to make acid-grade spar.

Kramer Mines, Inc., Fig. 20 (*Tref 5/43*).

Location: Near Salida, Colo.
Ore: Fluorspar and quartz, finely intergrown.
Capacity: 120 to 130 t.p.d.
Assays: Feed, 40 to 50% CaF_2; concentrate, 92 to 98%; tailing, 11 to 19%.
Recovery: 70 to 90%, according to grade of concentrate.
Ratio of concentration: 2.5 to 3.5 : 1.
Power: Purchased at 7,200 volts, 3-phase, 60-cycle; motors 440-volt.
Water: Wells. Hardness, 2 to 5 grains per gal. 1 @ 5×9-in. Aldrich Triplex pump, 475-ft. lift, 30-hp. motor.

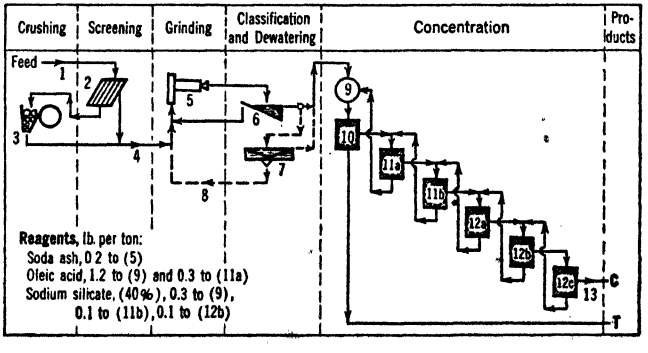

FIG. 20. KRAMER MINES, INC.

Legend for Fig. 20:

1. Truck from open cut and 1-ton cars hand-trammed from tunnels; 100-ton bin with 8-in. rail-grizzly cover; 18-in.×8-ft. belt feeder, 50 f.p.m., 1 1/2-hp. motor.

2. 1 @ 2×4-ft. grizzly, 1-in. spacing.

3. 1 @ 9×14-ft. single-toggle jaw crusher, 3/4- to 1-in. set; 15-hp. motor.

4. 1 @ 14-in.×89 1/2-ft. belt conveyor (−20°), 200 f.p.m., 2-hp. motor; 1 @ 150-ton bolted-steel bin; 1 @ 20-in.×10-ft. belt feeder, 15 f.p.m., 1 1/2-hp. motor.

5. 1 @ 5×8-ft. overflow ball mill, 28 1/2 r.p.m., 3-in. forged-steel balls; 68% solids; 100-hp. motor.

6. 1 @ 36-in.×15-ft. Simplex Akins high-weir classifier, 5 r.p.m., 2-hp. motor; overflow, 65 *mog*, 65% <200-m., 35% solids, *p*H 8.2.

7. 1 @ 10-ft. hydro-bowl classifier, 1-hp. motor. Used when exceptionally fine grinding is needed to free fluorspar.

8. 4-in. diaphragm pump.

9. 1 @ 4×4-ft. Denver conditioner, 85° F.

10. 1 @ 6-cell No. 18 Denver Sub-A flotation machine.

11. 1 as (10); *a* = cells 3–6, *b* = cells 1, 2.

12. 1 as (10); *a* = cells 5 and 6; *b* = cells 3 and 4; *c* = cells 1 and 2.

13. 1 @ 15 1/2×8-ft. thickener, 4 m.p.r., underflow 65% solids; 1 @ 4×2-ft. drum filter, 2 1/2 m.p.r., covered with 60-m. stainless-steel cloth, vacuum 20 in. Hg; cake <10% moisture; 1 @ 3×21 1/3-ft. direct-heat rotary drier, 3.2 r.p.m., oil-fired (3 to 4 gal. per ton of concentrate), 3-hp. motor; 1 @ 9-in. ×10-ft. screw conveyor, 16 r.p.m., 3/4-hp. motor; 1 @ 6×4-in.×33-ft. bucket elevator, 225 f.p.m., 2-hp. motor; 2 @ 15 1/3×20-ft. bolted-steel bins, combined capacity 425 tons. Shipment is by 5-ton dust-tight canvas-covered trucks and paper-lined boxcars.

Summary. One-stage crushing and one-stage closed-circuit ball milling to 65 *mog;* one-stage flotation roughing and 5 cleaning stages with one-step counterflows of all cleaner tailings.

17. FULLERS' EARTH AND BLEACHING CLAYS

Occurrence and properties. Fullers' earth is a water-worked clay which may be either calcareous or bentonitic; it occurs in beds, frequently 8 ft. or more thick. It is of two types: naturally active (FULLERS' EARTH) and active after acid-treatment (ARTIFICIALLY ACTIVATED EARTHS). The latter may be bentonitic, but natural fullers' earth and other clays are also acid-treated to enhance bleaching properties. Fullers' earth is typically nonplastic, has a large water content, and, if dried, adheres strongly to the tongue but does not slake readily. Best grades are light gray to brown in the raw wet state and nearly white after drying. Activable bentonites slake but do not swell like the Wyoming bentonites. The decolorizing power of percolation-grade clay is determined by passing standard oil through a column of the granular clay, measuring the volume of filtrate at a given color and comparing for color with a sample decolorized by clay of known bleaching power. Decolorizing power of contact-grade clay is measured by agitating with standard oil and comparing colors of filtrates; efficiency is expressed as per cent. of quantity of standard clay required to produce the same color. Unfortunately there is no single oil standard and relative values of competitive clays must be established on separate customer's stocks. Low oil retention of contact clay is second in importance only to bleaching power.

Uses. Over 90% of the domestic fullers' earth sold is used for refining petroleum products, especially lubricants; 5 to 7% for clarifying, bleaching, decolorizing, or filtering animal and vegetable oils; and only 1 or 2% for miscellaneous purposes. It is no longer used for fulling cloth. The principal object of applying bleaching earths is to remove color, but it also removes gum and other undesirable impurities and in edible oils it controls odor and taste. Bleaching clays are used in both contacting and percolation processes, the latter requiring a coarser, granular product.

Production. England was virtually the only source of fullers' earth until 1895, when American production began in Florida. Germany, U.S.S.R., France, and Japan are minor producers. Domestic output was a maximum at 335,644 short tons, valued at $4,326,705, in 1930; competition from activated earths and new oil-refining methods have since lowered the demand. World production of activated clay was at least 100,000 tons in 1937, of which nearly 75,000 tons was from the United States.

Selling. The market for natural bleaching clays is limited because many of the large oil companies mine their own earth. Bleaching clay is sometimes shipped loose in box or tank cars, but usually in returnable 135-lb. paper or burlap bags. Fine-grade clay (100-m. and finer) is used exclusively in contact-filtration plants. Average value of fullers' earth, f.o.b. American mines, was about $14 per ton in 1925–29 and $10 in the early 30's. Quotations in 1936–37 were: F.o.b. Georgia or Florida mines, $14.50 per ton for 30- to 60-m., $14 per ton for 15- to 30-m., $10 for 200-m. up, and $7 for 100-m. up; f.o.b. California mines, $17 to $21 for ground earth; f.o.b. Colorado, $9 per ton for crude. In 1938, German activated clay cost $70 per ton, delivered in New York; competitive domestic earth was $42 f.o.b. Los Angeles, Calif., or Jackson, Miss.

Treatment. Treatment of fullers' earth that is to be used in the natural state is relatively simple. A typical flowsheet for percolation-grade earth comprises cutting to <1-in., drying, graded crushing, and screening.

At ATTAPULGUS CLAY CO., Attapulgus, Ga. (*21 #9 PQ 62*), large tonnages are treated by air drying for 2 or 3 days to some 40 or 50% max. moisture; crushing, or, better, cutting, with disked rolls in two stages to about 1-in. max.; drying in a rotary drier to about 20% max. moisture; and then crushing in one closed- and 5 open-circuit stages with corrugated rolls, sifting out finished sizes on gyrating silk-cloth sifters after each step.

Temperature and time in drying must be controlled closely to avoid damaging clay. From 8 to 10% free moisture is left in contact clays, corresponding to a total volatile content of 15%. The adsorptive power of fullers' earth of the Georgia-Florida type (montmorillonite) may be increased 20% by an extrusion treatment, in which the clay is pugged and then forced through slots very much as meat is forced out of a domestic grinder. This not only makes a better product but permits virtually complete recovery of all of the clay in a granular form suitable for percolation.

Activated earth is made by agitating raw fullers' earth with sulphuric (or hydrochloric) acid for several hours at boiling temperature (212° to 220° F.), washing, filtering, drying, and pulverizing. The operation may be either batch or continuous.

18. GARNET

Properties. The garnet group comprises seven species of trisilicates of which pink, red, or black almandite ($3FeO \cdot Al_2O_3 \cdot 3SiO_2$) is most common and important. Andradite ($3CaO \cdot Fe_2O_3 \cdot 3SiO_2$) is also rather common and occurs in three varieties, *viz.*, melanite (black), demantoid (green), and topazolite (yellow green). Grossularite ($3CaO \cdot Al_2O_3 \cdot 3SiO_2$) may be white, pale green, or yellow. Uvarovite ($3CaO \cdot Cr_2O_3 \cdot 3SiO_2$) is emerald green. Pyrope ($3MgO \cdot Al_2O_3 \cdot 3SiO_2$) ranges in color from deep red to black. Spessartite ($3MnO \cdot Al_2O_3 \cdot 3SiO_2$) is brown to red. Rhodolite, a 2 to 1 mixture of pyrope and almandite, varies from pink to dark red. HARDNESS ranges from 6 to 7.5; almandite is sometimes rated 8. SP. GR., 3.5 to 4.2; almandite, 3.9 to 4.2. PERMEABILITY, see Sec. 13, Table 3. Some garnets are virtually infusible but almandite melts readily at 1,315° C. LUSTER is typically glassy; FRACTURE conchoidal; commercial varieties must be exceptionally tough; the shape of the fractured grains should be roughly equiaxed and chisel-edged, and light transparent red color is preferred by most consumers.

Occurrence. Garnets are found in a large variety of rocks; in some schists and gneisses they constitute from 10 to 50% of the rock over large areas. They are resistant to weathering and concentrate as rounded grains in river and sea sands. In Warren County, N. Y., garnet crystals may be several feet in diameter and are mostly an inch or more in diameter; the garnet must run as much as 6% (preferably 13%) of the rock mass (gneiss) to be workable. Common gangue minerals are hornblende, feldspar, and a little pyroxene, mica, quartz, and iron sulphide.

Uses. Garnets are well-known gemstones, particularly the blood-red pyrope, but the quantities so used are insignificant. Garnets have been displaced largely by sapphires in watch and instrument bearings. More than 90% of the garnet mined is used as abrasive, chiefly for coating papers and cloth, but increasing quantities are being used in sandblasting marble, slate, and other soft stone; for cleaning spark plugs; and for polishing and marking plate glass. Garnet-coated papers are used in this country mostly in the woodworking industry; in hardwood finishing garnet lasts longer and cuts two to six times as fast as quartz.

Production. Three mines in New York State, two of which are owned by one company, have supplied the bulk of the domestic production of garnet; additional supplies have come sporadically from New Hampshire and North Carolina. Production in the United States reached a peak of 9,006 short tons valued at $688,437 in 1923; in 1925, 7,429 tons valued at $712,853 was reported; in 1932 the figures were 1,950 tons worth $147,350; and in 1937 there was 4,863 tons valued at $382,535. For almost a decade the United States has been the only producer of mined garnet that is crushed and graded. (See Art. 1.) The domestic output of gem garnet has never risen above $2,000 and in recent years has been very small.

Selling. Abrasive-paper and cloth manufacturers in the United States prefer to do their own careful sizing and grading, so that sales are chiefly of ungraded concentrates, averaging better than 90% garnet, shipped in 100- or 150-lb. bags. Best-grade mixed concentrates have been quoted uniformly at about $85 per short ton f.o.b. mines; lower grades at $60; glass-surfacing grains around $40 to $45; the average of all shipments in recent years, however, has been around $80. Finished and graded grains sell for 4 to 8¢ per lb.; these are bought by European manufacturers of coated abrasive.

Treatment. The main objective in milling for the coated-abrasive trade is to avoid fines, but for plate glass and some other uses all sizes are eventually ground to pass 300-m. Stage crushing is the rule, and as garnet does not break down easily the undersize from a fine screen may often be discarded. Harz or James jigs are commonly used for concentrating all sizes over about 14-m. and sands are now tabled. The Hooper vanning jig, developed at a New York garnet mill, when preceded by a classifier, does as good or better work than tables but concentrates have to be removed by hand. Dry concentrators have been used in New Hampshire and North Carolina to eliminate mica and feldspar or quartz:

they are supplemented by magnetic treatment for recovery from kyanite schists. Electrostatic cleaning is effective, particularly for removing mica, but has been discontinued in favor of gravity methods after being tried at several plants. Recovery by froth flotation is practical on sizes under about 60-m. Sink-float roughing is used at BARTON MINES.

Barton Mines Corp., Fig. 21 (*153 A 429*).

Location: North Creek, N. Y.

Crude: Almandite with hornblende, feldspars, and small amounts of biotite, apatite, and garnet. Garnet content ranges from 5 to 20%; averages 10 to 12%. Garnet crystals average 4- to 6-in. and range from a fraction of an inch to 30- or 36-in.; most of them have a rim of coarsely crystalline hornblende. Sp. gr. of garnet is 3.8 to 4.1; hornblende, 3.1 to 3.2 (occasionally 3.4).

Legend for Fig. 21:

1. Jaw crusher.
2. Cone crusher, 1 1/4-in. product.
3. Mill ore bin; conveyor.
3*a*. Bucket elevator.
4. 1 @ 2-deck 4×10-ft. Ty-rock screen, 1/4-in. and 0.116-in. apertures.
5. 60 to 70% of mill feed.
6. 1 @ 5-ft. sink-float cone, 4-in. outside air-lift; ferrosilicon medium of 3.10 to 3.25 sp. gr. top (bottom 0.05 higher); consumption about 0.4 lb. per ton of mill feed.
7. 2 @ 4×10-ft. 2-deck Ty-rock screens in series, 1/4- and 1/2-in. (last 3 1/3 ft.) apertures on upper deck, 0.063-in. (10-m.) Ton-Cap on lower decks; screens divided longitudinally to serve for both float and sink.
8. 1 @ 30×14-in. Traylor rolls.
9. 6-ft. Allen cone (slime to waste); hydraulic classifier.
10. Hooper vanning jigs.
11. James jigs. Middlings crushed in rod mills and returned to (3*a*).

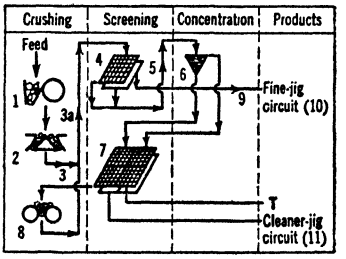

FIG. 21. BARTON MINES CORP.

Assays: >1/2-in. cone tailing, 0.3% garnet max.; <1/2-in. cone tailing (>1/4-in.), 3.0 garnet average, may run 5% on difficult ore. Cone tailings are 50 to 60% of total mill tailing and are about half-and-half >1/2-in. and <1/2-in.

19. GEM MINERALS

Properties. Color, luster, perfection of crystallization, and purity are the important properties of gem minerals. The precious stones are hard; of them only EMERALD (beryl, $Be_3Al_2Si_6O_{18}$) is under 9 on Mohs' scale, and the diamond (C) is the hardest substance known. Other precious stones are the colorless or blue (SAPPHIRE), and red (RUBY), or green (ORIENTAL EMERALD) crystalline varieties of corundum (Al_2O_3). Precious OPAL ($SiO_2 \cdot H_2O$) is also sometimes included. The semiprecious group includes specimens of almost any kind of mineral that has ornamental possibilities. Beryl, chrysoberyl, the feldspar gems (especially amazonite and moonstone), garnet, jade, lapis lazuli, peridot, spinel, topaz, tourmaline, turquoise, zircon, and the almost innumerable varieties of quartz gems all come in this class. The terminology is even more complicated than the mineralogy because the same stone often masquerades under a variety of names.

Uses. Off-color gem materials and fragments too small for use in jewelry are used as abrasives, for pointing tools, and for watch and instrument bearings. Semiprecious stones are used for vases, desk ornaments, and novelties of various kinds. Small pieces of colored stones, especially turquoise, are cemented together and made into various articles, and fragments of Oriental rubies, emeralds, and sapphires have been melted and thus manufactured into RECONSTRUCTED STONES.

Occurrence. Pegmatites are the original source of tourmalines, topaz, feldspar gems, quartz, zircon, emerald, and certain other gemstones, and basic rocks (pipes) and dikes have yielded diamonds and a few other gems. Gems occur in all rocks but, with a few notable exceptions, in such minor amounts that they cannot be worked economically in the mother rock and mining is largely confined to placer deposits where they have been roughly concentrated by streams or meteoric agencies.

Production. Statistics of production of gems other than diamonds (Art. 12) are meager. Turquoise and opal are fairly abundant in Nevada; sapphires have been mined on a variable scale in Montana; diamonds have been produced in Arkansas; amazon stone is shipped occasionally from Colorado and Virginia; California has reported kunzite and a variety of other gems; sporadic finds have been made in most States, but domestic production has never been large. The world's emeralds have come mainly from two districts in Colombia, the Russian Urals, and South Africa and are also mined in Brazil; rubies and sapphires from Burma, Ceylon, Siam, and Australia; turquoise from Persia, Tibet, Ethiopia, and the Sinai Peninsula; jade is a product of the Far East, current supplies coming principally from Turkestan and Burma; gem opals are mostly derived from Mexico,

Hungary, and Australia; and amber comes from the shores of the Baltic Sea. Even the semiprecious stones come mostly from one or two typical districts, although the source is not always well known; Brazilian onyx, for example, comes from Argentina.

Selling. Local jewelers are sometimes willing to purchase rough stones or to direct finders of occasional stones to lapidaries, wholesale houses, or dealers who handle mineral material for the optical, radio, and electrical industries. Abrasive and other industrial materials, however, are generally handled by special agencies or may be sold direct to large consumers. Prices are necessarily based upon private negotiation.

Treatment. Owing to the small scale of most gem-mining operations and also because so many of the operations are conducted in nonindustrial countries where native labor is cheap, production methods are typically primitive; they consist of hand panning or sluicing, followed by hand sorting. For gems that are typically heavier than quartz, the technique of diamond washing (Art. 12) may be applicable.

Industrial sapphires are produced in Montana and elsewhere by placer mining, often with gold as a joint product. Most industrial corundum jewels for watch, chronometer, and instrument bearings, however, are synthetic stones, made by melting Al_2O_3 containing a trace of coloring oxide in an oxy-hydrogen flame (Vermeuil process).

20. GRAPHITE

Properties. Graphite is one of the three principal forms of carbon. It is soft, black, unctuous (greasy), virtually infusible, resistant to most chemicals, a good conductor of heat or electricity, and a good lubricant. Actually all graphite is crystalline, but fine-grained graphite is commercially described as amorphous, grading on the one hand into anthracite coal and on the other into crystalline graphite. The latter term includes both flake graphite, which occurs in flakes or scales (lamellar), and other forms (such as lump, chip, and dust), produced principally in Ceylon and known as vein graphite or PLUMBAGO. Amorphous graphite may be called BLACK LEAD, and the term "graphite" is restricted by some to the crystalline flake mineral, though such usage is by no means universal. The SP. GR. is 2.1 to 2.3, intermediate between that of charcoal (1.3 to 1.9) and diamond (3.5). HARDNESS is 1; LUSTER is metallic.

Uses. Crucibles, retorts, ladle stoppers, and other graphite-clay refractories consume a substantial quantity of high-grade crystalline graphite. The leading use at present is in foundry facings; amorphous and, sometimes, artificial or manufactured graphite is used, as well as dust from crystalline grades. Pencil leads are made principally of mixtures of crystalline and amorphous graphite, particle size and color being important requirements. Both kinds of natural graphite and manufactured graphite are used in lubricants (which require grit-free material) and paints (for which high-grade material is unnecessary). Other uses include stove polish, dynamo brushes, dry batteries, boiler compounds; polish for glazing high explosives, shot, tea leaves, etc.; and as a filler or pigment in various articles.

Occurrence. The most common occurrence is in metamorphic rocks, especially schists, gneisses, and metamorphosed limestones; the content is rarely more than 6% graphite. Amorphous graphite may occur in coal strata. Other deposits are formed in limestone by contact metamorphism, and some pegmatites carry graphite. Schist deposits often carry other flaky minerals (mica, chlorite, and occasionally molybdenite) which are difficult to separate.

Production. World production was 221,000 tons in 1917; in the late 1920's it was about 150,000 tons. Ceylon graphite formerly comprised one-fourth the quantity and three-fourths the value of world production but now is less than 10% of the world tonnage and the relative value is much reduced. The highest-priced grades come only from Ceylon. Madagascar (flake), Ceylon (crystalline and high-grade amorphous), Chosen (chiefly amorphous), and Mexico (amorphous) supply most of the graphite that is valuable enough to bear cost of shipment overseas or long distances by rail. Central Europe has large supplies of low-grade flake and amorphous. The United States has never been a large producer and recently has produced mostly low-grade amorphous material for use in paint; it ranks second in consumption of high-grade graphite (30,000 tons in 1937).

Selling. Domestic supplies are principally imported. Mexican amorphous graphite, which carries a minimum of 80% graphitic carbon, is now the principal factor in domestic consumption; it costs $25 to $30 a short ton (including $14 freight) delivered in New York, in box cars, in bulk. Chosen amorphous is a trifle cheaper and both grades can be bought finely powdered for a little over $40 a ton, f.o.b. New York. Ceylon No. 1 lump is rarely sold now, but is quoted at 6 1/2¢ per lb., crude. Soft carbon lump, 90% C, also from Ceylon, is worth $50 to $70 a ton. Madagascar No. 1 flake, 85% C, sells in car lots (25 tons min.) for $75 to $120 a short ton, after paying freight (55s. to 65s. a metric ton) and import duty.

Any graphite containing less than about 80% C is difficult to sell, except perhaps for making paint. However, the percentage of C is not a sole criterion. Not only must the carbon be graphitic but other physical properties are quite as important as chemical composition. The value of flake graphite, for

example, depends largely upon the size and toughness of the particles and even an expert has difficulty in appraising the quality of a new product. Ordinary concentrates are likely to carry silica so imbedded naturally between laminae or pressed in during the grinding operation (PANCAKING) that it cannot be eliminated in subsequent cleaning operations without destroying the structure.

Treatment. Amorphous graphite that needs to be concentrated is not worth mining; preparation for foundry facing and paints usually requires grinding only; coarse impurities may be removed by screening or be dropped in air separators. Ceylon graphite is refined by hand methods, *i.e.*, screening, cobbing, wiping lumps with wet burlap, and removing small chips and dust by winnowing Flake from disseminated deposits must be concentrated; virtually every known concentrating device and combination of separating principles has been tried. The principal problem is to free the graphite without destroying the flakes or unduly reducing them in size, but this is difficult because crushing forces fine grains of gangue into the graphite. Probably in no other industry have so many mills been built that failed to make commercial recoveries. Many so-called secret processes have been developed and the mineral has gained the reputation of being difficult to separate. Actually it is one of the easiest minerals to segregate into a rough concentrate and one of the hardest to refine. It floats very readily, hence froth flotation is the simplest method for roughing. But cleaning by flotation is substantially ineffective without intervening treatment that liberates, and since such treatment leaves the gangue coated with graphite and hence floatable, subsequent separation is delicate, even if possible. In practice most refining is done by further grinding in rolls or buhrstones, followed by screening. The principle is preferential grinding of brittle gangue, leaving tough flake untorn, if possible; weak flake cannot stand such treatment. Seemingly, no mechanical process will yield flake graphite of extremely high purity; high-priced products may be purified chemically, SiO_2 being eliminated with HF or, occasionally, by fusion with an alkali such as Na_2CO_3. Few mills have succeeded in commercially unlocking large graphite flake from hard, fresh rock. Fig. 22 gives the flowsheet of one of the few mills that has operated on the North American continent for more than a very few years.

American Graphite Co., Fig. 22 (*120 P 567*).

Location: Ticonderoga, N. Y.
Ore: Flake graphite in quartzitic schist.
Capacity: 100 t.p.d.
Assays, % graphitic C: Feed, 5.5; concentrate (total), 86.5; coarse flake, 91.
Recovery: 87%.

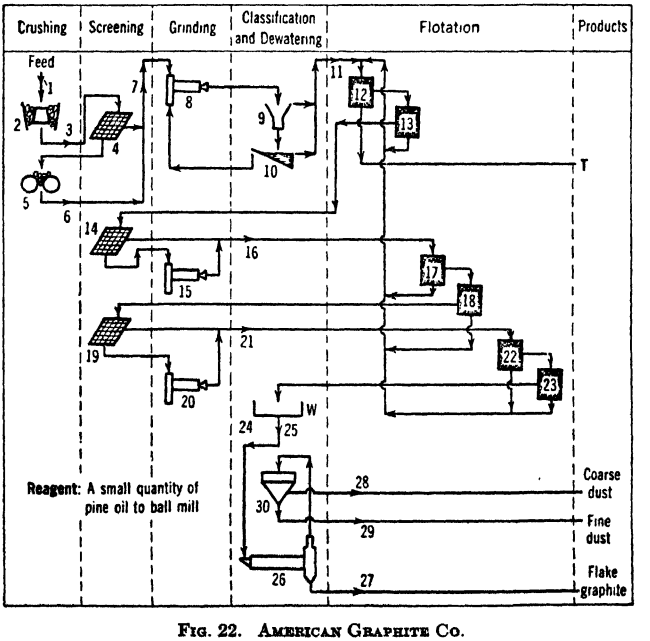

FIG. 22. AMERICAN GRAPHITE CO.

Legend for Fig. 22:

1. 300-ton bin.
2. 1 @ No. 6 McCully gyratory crusher.
3. 1 @ 18-in. belt conveyor; 1 @ 16-in. belt-bucket elevator.
4. 1 @ 3×7-ft. trommel, 1-in. rd. holes.
5. 1 @ 30×14-in. rolls.
6. 1 @ 16-in. belt-bucket elevator.
7. 1 as (6); 1 @ 200-ton bin; 1 @ 16-in. belt feeder.
8. 1 @ 6-ft.×22-in. conical ball mill.
9. Deister cone classifier.
10. 1 @ 4 1/2-ft. duplex rake classifier. A large circulating load is carried to reduce overgrind and pancaking as much as possible. Overflow is 28-m. limiting because of flake graphite lifted owing to addition of oil to the mill.
11. 1 @ 12-in. belt-bucket elevator.
12. 4 @ 2×8-ft. standard Callow cells.
13. 2 as (12). Sides of all cleaners are raised about 12 in. and 3 transverse baffles are inserted in the bubble column to cause froth to cascade toward the tailing end, where it discharges at about normal height; this arrangement improves grade of concentrate.
14. 1 @ 2 1/2×5-ft. trommel, 100-m. silk cloth.
15. 1 @ 5-ft.×22-in. conical pebble mill.
16. 1 as (11).
17. 1 as (13).
18. 1 as (13).
19. 1 as (14), 7 ft. long.
20. 1 as (15).
21. 1 as (11).
22. 1 as (13).
23. 1 as (13).
24. Intermittent settling tanks, one side canvas. Material drains in 8 hr. to about 40% moisture, and is shoveled out by hand.
25. Screw conveyor.
26. Rotary drier.
27. Shipping bins.
28. Bin.
29. Bin.
30. Air classifier.

Summary. Two-stage open-circuit crushing to ball-mill feed; one-stage closed-circuit ball milling under conditions to encourage overflow of coarse flake; one-stage roughing flotation; five stages of cleaning, with regrinding of the >100-m. float after the first and third stages; all cleaner tailings counterflowed to the rougher.

21. GYPSUM

Properties. Gypsum, $CaSO_4 \cdot 2H_2O$, is a soft, usually colorless mineral, occurring compact or massive (also scaly, silky, or fibrous) and cleavable in three directions. HARDNESS is 1.5 to 2; SP. GR., 2.3. Dead-burned gypsum is identical in composition with anhydrite, $CaSO_4$, which is harder (H = 3 to 3.5) and slightly heavier (SP. GR. = 2.9 to 3).

Uses. Nearly 25% of domestic sales are raw gypsum for use chiefly as a Portland-cement retarder, and for grinding to LAND PLASTER, a soil sweetener and fertilizer employed principally on peanuts (for which purpose anhydrite also is acceptable), or for filler. More than 75% of the gypsum used in the United States, however, is calcined into plaster of Paris, which in turn is made into various kinds of prepared plaster and other products such as wall board. Small quantities of calcined gypsum are used for bedding plate glass and cut stone while they are being ground or polished; as a mold or cast in potteries, terra cotta works, and iron foundries; and for surgical and dental purposes, but the tonnage consumed outside of the building industry is relatively small. Pure white or attractively veined, fine-grained gypsum is called ALABASTER and may be fashioned into statuary, lamp bases, art goods, and novelties.

Occurrence. Selenite is a frequent gangue mineral in metallic ores but ordinarily does not pay to separate. Rock gypsum is found in beds of wide extent up to 50 ft. thick in many localities, so only those within fairly easy reach of populous consuming areas can be worked.

Production. Ordinarily the United States is the largest producer both as regards tonnage mined and value of products, with France second, the United Kingdom third, and Canada or Germany fourth. World production in 1937 was about 9,500,000 metric tons. Domestic production of crude gypsum was 3,058,166 short tons in 1937 compared with a peak of 5,678,302 in 1925. Imports of Canadian crude reached a maximum of 1,036,585 short tons in 1929 compared with 897,484 in 1937 and 634,423 in 1925. Gross value of sales of domestic and imported gypsum and products was about $39,000,000 in 1937, of which 860,825 short tons valued at $1,920,706 was sold raw and 2,645,081 tons (total weight of calcined gypsum, filler, paper, etc.) valued at $36,914,006 represented finished calcined products. The pre-depression peak gross value was nearly $50,000,000.

Selling. The gypsum industry of the United States is highly integrated and even the gypsum imported from Canada is mostly mined by the same companies that convert it into plaster. Much of the domestic gypsum sold to cement plants is screenings from lump material produced by companies that not only mine gypsum but also make plaster and often a complete line of gypsum products as well. Notwithstanding a trend to build calcining works at consuming centers rather than at the mines, and although Canadian gypsum is carried all the way to London as well as to Atlantic seaboard plants in the United States, very little raw gypsum actually comes into the open market.

The average prices of domestic raw gypsum, f.o.b. mines, have ranged from $1.75 to $2 a short ton for cement retarder and around $5 a ton for that sold for land plaster, whereas the average value of the various products made from calcined gypsum of domestic origin recently has been $15 a ton or more, although in 1937 the average value of STUCCO or calcined gypsum as it left the kilns was only $4.58.

Treatment. Crude gypsum containing any appreciable amount of impurities that would have to be separated is not considered commercial. Aside from screening to reject fines and clay, and crushing to about <1 1/2-in. for kettle feed, no beneficiation is considered possible. In the United States vertical cylinders or kettles (Fig. 23), mostly taking 10-ton batches, are ordinarily used for calcining. These are typically 8 to 10 ft. high, and 8 to 12 ft. in diameter; the steel shell is 3/8 to 3/4 in. thick and bottoms are cast iron or steel, 1 to 3 in. thick and arched over the grate. Flues may be passed through the shell of the kettle as well as between the shell and the enclosing brickwork. Paddles are provided to keep the gypsum in motion. After being previously warmed to 212° F. to drive out moisture, the kettles are slowly charged with ground gypsum and then heated gradually. At 230° F. the gypsum begins to boil violently and continues to boil until a little more than half its combined water has passed out as steam. The product so formed is FIRST-SETTLE PLASTER. If the temperature is raised above 270° F., boiling is resumed and more water passes off up to a certain limit, forming SECOND-SETTLE PLASTER. At temperatures much above 330° F. the plaster may be overheated and become dead-burned and worthless. The temperatures at which these transformations take place, however, vary, and the size of kettle

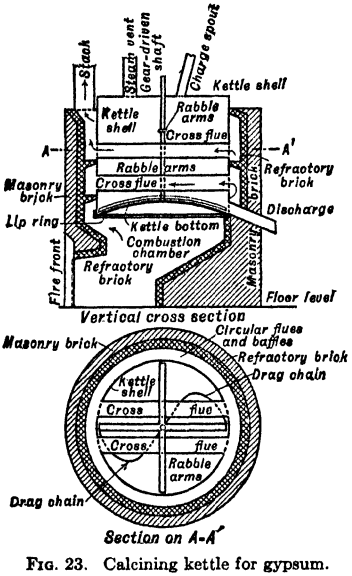

FIG. 23. Calcining kettle for gypsum.

Legend for Fig. 24:

1. Primary crusher; may be jaw, gyratory, single-roll or hammer-mill. It is set about 3 in., if secondary crushing is done; otherwise about 1 1/2 in.
2. Conveyor with magnetic head pulley.
3. Screen, @ 1 1/2-in. aperture; revolving, vibrating, or fixed.
4. Secondary crusher of roll, ring, or cracker type, set at about 1 1/2 in. Items (3) and (4) are omitted in some modern plants.
5. Rotary drier.
6. Vibrating screen, @ 1-in. aperture.
7. Rotary kiln.
8. Hammer mill, ring-roller mill, buhr- or emery-stone mill, set about 3/8-in.
9. Vibrating screen, 10- to 20-m.
10. Same as (8).
11. Air separator; 100-m. separation.
12. Kettle.
13. Hot pit.
14. Vibrating screen, 1/8-in. openings.
15. Roller mill.
16. Air separator integral with roller mill; discharge 70 to 95% <100-m.
17. Tube mill; gravity-flow, ventilated or air-swept.
18. Retarder, filler, fiber, etc.
19. Mixer, bagging machine.
20. Block machine, drier.
21. Board machine, drier.

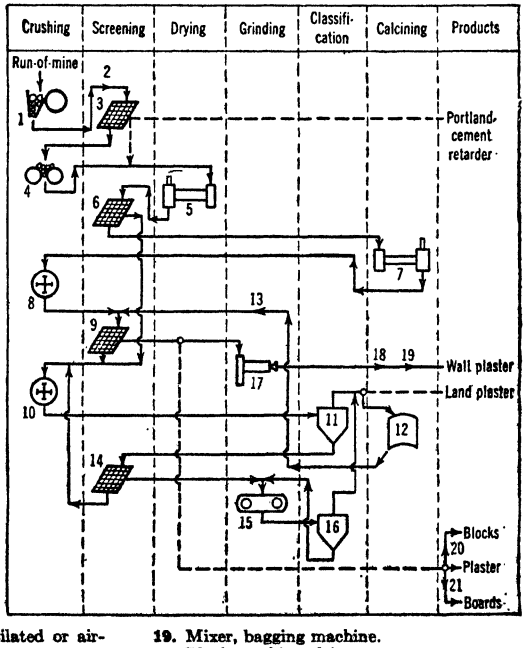

FIG. 24. Generalized flowsheet for gypsum products.

and time of exposure alter the results, hence much first-settle plaster actually is taken out at 320° to 350° and second-settle at 390° to 410° F.

Rotary kilns are also used.

Fig. 24 (*IC 7049*) shows a generalized flowsheet of a gypsum-products plant.

Fort Dodge Gypsum Co., Fig. 25 (*41 #4 RP 41*).

Location: Fort Dodge, Iowa.
Capacity: 300 t.p.d.

Legend for Fig. 25:

1. Hand sledging in quarry; 2-car trains of 2-ton cars by hoist on incline.
2. 1 @ 42×18-in. McLanahan-Stone single-roll crusher, 1 1/2-in. set.
3. Bucket elevator.
4. 1 @ 4×8-ft. Universal vibrating screen, 1 1/4-in. square aperture.
5. Stationary screen.
6. 30-ton bin.
7. 250-ton bin.
8. 120-ton bin; R.R. cars about 500 ft.; 120-ton bin; drag conveyor.
9. 1 @ 24×36-in. grate-type hammer mill, 40-m. product.
10. 20-ton bin; screw conveyor.
11. 2 @ 15-ton Ehrsam batch calcining kettles in parallel; coal-fired; 2 1/2 hr. minimum at 280° to 335° F.
12. Hot pit; bucket elevator; 30-ton bin.

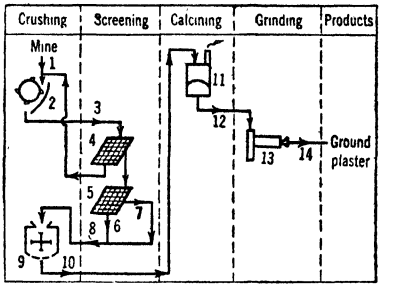

13. 1 @ 5×20-ft. peripheral-discharge tube mill, 1 1/2–1/2-in. slugs; capacity 12 t.p.h. to <300-m.
14. Elevator; 60-ton bin; elevator; 10-ton bin; paddle mixer; bagging machine.

FIG. 25. FORT DODGE GYPSUM CO.

Summary. Two-stage crushing to <40-m. in single-roll crusher and hammer mill; calcining; tube-mill grinding to 300-m.

22. ICELAND SPAR

Properties and uses. Iceland spar is a variety of calcite, $CaCO_3$, characterized by exceptional purity, transparency, perfect crystalline structure, and marked double refraction. Good optical spar splits in three directions at oblique angles, forming a perfect rhombohedron. The most important use is for Nicol prisms, which are essential parts of every polarizing microscope, and in special instruments such as saccharimeters, dichroscopes, photometers, colorimeters, and polariscopes. Owing to its chemical purity, Iceland spar is used by manufacturing chemists and laboratories for standardizing solutions.

Occurrence. Deposits are rare. Principal deposits are pockets or small masses of crystal aggregates mixed with clay in cavities of basic igneous rocks. The spar mine in Iceland, for many years the only source, has been virtually abandoned as the material became lower in grade.

Production and selling. South Africa was the leading producer from about 1921 until the late 1930's. In 1939, an important discovery was made in New Mexico. Other deposits have been reported; most of them have not proved commercial, although small shipments have been made intermittently from Spain and elsewhere. Before 1914, German firms supplied virtually all the world's Nicol prisms so that the demand for optical calcite in the United States and other countries was almost nil. American consumption is still small, probably not more than 300 lb. annually in the late 1930's; foreign consumption is normally considerably greater, but no figures are available.

Prices of rough optical spar fluctuate from $7 to $35 a pound. Standardizing spar and ordinary museum specimens are worth $1 to $3 a pound. Optical spar must be water-clear, untwinned, free from incipient cracks or other visible defects. Pieces smaller than 1-in. length and 1/2×1/2-in. cross-section are rarely acceptable for optical use.

Mining and preparation. Preparation starts in the mine. Ordinary open-pit mining methods were used in Iceland, the country rock being broken by explosives, and clay pockets worked by hand to recover crystals which were later cobbed and broken into smaller pieces. Blasting, however, ruins much otherwise good material. One alternative to explosives in drill-holes is quicklime which is tamped around a wire. A cotton string saturated with water is substituted for the wire before stemming. Water from the wet

string slowly slakes the lime which expands enough to cause fracture. Channeling, wedging, and other methods such as are used for quarrying dimension stone or gem material may also be applicable. Each specimen must be examined from every direction. Imperfect portions of large crystals may be trimmed away, preferably by an experienced person. One misdirected blow may cause incipient fractures throughout the whole crystal. In shipping, each piece should be wrapped separately to prevent damage.

23. KYANITE, ETC.

Properties. The three minerals kyanite (also spelled CYANITE), sillimanite, and andalusite all have the same composition $Al_2O_3 \cdot SiO_2$ but differ in mode of crystallization. Andalusite and kyanite revert to sillimanite when heated to between 1,350° and 1,400° C. Dumortierite, $8Al_2O_3 \cdot B_2O_3 \cdot 6SiO_2 \cdot H_2O$, despite the slightly higher Al_2O_3, boric acid, and water content and different appearance, is closely related in thermal behavior and has corresponding uses. All four minerals are converted above 1,545° C. to mullite, $3Al_2O_3 \cdot 2SiO_2$, and a liquid. Properties are summarized in Table 10.

Table 10. Properties of the kyanite minerals

Mineral	Crystallization	Sp. gr.	Hardness	Cleavage	Color
Andalusite...	Orthorhombic	3.1 to 3.2	7.5	Prismatic	Gray or green, red, blue tints
Dumortierite.	do.	3.25 to 3.35	7	Macro- and brachy-pinacoidal	Bright blue to green blue
Kyanite.....	Triclinic	3.5 to 3.7	4 to 7	Macro- and brachy-pinacoidal	Blue, gray, green, brown
Mullite.....	Orthorhombic	3.156	6 to 7	.....	White
Sillimanite...	do.	3.2 to 3.25	6 to 7	Macro-pinacoidal	White, gray, brown, green

Uses. Dumortierite and andalusite are used for the manufacture of porcelain spark-plug cores and sillimanite laboratory ware. Imported kyanite and some domestic is used in sillimanite brick. The principal use of all kyanite is in glass-plant refractories and refractory cement. Synthetic mullite, made from electrically fused diaspore and kaolin, is an important competitor of kyanite, being used for refractory porcelains as well as in glass tanks, saggers, muffles, and parts of high-temperature furnaces. Low-iron concentrates may be used in glass as a source of alumina, replacing feldspar.

Occurrence. Kyanite is a common mineral in crystalline rocks; the most important occurrences are in gneiss or schist where it may comprise 10 to 40% of the rock over fairly large areas. The most productive deposit so far has been that of CELO MINES, near Burnsville, N. C. The ore averages 15% kyanite but 26 different minerals have been identified in a single hand specimen. Andalusite is mined relatively extensively only near the Nevada-California border where it occurs in irregular segregations in lenticular quartz masses enclosed in sericite schist or in vertical veinlike deposits along with corundum and diaspore. Sillimanite occurs in gneisses, schists, slates, and hornfels; it is frequently associated with or grades into corundum. Dumortierite is not common but occurs in Nevada in masses in a quartz segregation in much the same way as andalusite. Mullite is a common and exceedingly desirable constituent of refractories but is rare in nature.

Production. None of these minerals was mined to an appreciable extent until after 1918. In 1937 the total domestic production, chiefly kyanite, may have been as much as 6,000 to 7,000 tons, and imports rose in that year to 7,674 short tons, all from British India. Consumption outside of the United States is not known but probably is very small.

Selling. No sillimanite is known to have been mined in the United States, and, since the consumption of andalusite and dumortierite has been almost exclusively by the company that mined it, kyanite is virtually the only one of the group that has appeared on the market; this market is still in the development stage. Prices have been the main deterrent to more widespread use of all of these minerals. When first introduced, about 1923, kyanite sold for $100 a short ton; by the end of 1934 CELO MINES, leading producer in the United States, was quoting $18 a short ton for 70 to 80% concentrates, grading up to $25 for 90%. An additional charge of $15 a ton was made for calcining. In 1938, North Carolina and Georgia concentrates of improved grade were quoted at $18 to $22.50 a ton. Imported kyanite is nominally cheaper; most of it comes as exceedingly hard, tough boulders from which large grains, desired by brickmakers, as well as fines can be made by crushing.

Treatment. In British India the kyanite and corundum boulders are selected by hand. At the Detroit, Mich., plant of the CHAMPION SILLIMANITE CO., the andalusite and dumortierite, selectively mined and hand-sorted at the company's California and Nevada mines, and bedded, is crushed, passed over a magnetic separator, sized, and sent to shipping bins.

Celo Mines, Inc., Fig. 26 (*Q; 138 #9 J 45*).

Location: Burnsville, N. C.

Ore: Gneiss. Kyanite, 15 to 20%, finely disseminated garnet, 10 to 15%; quartz, 25 to 30%; mica, 35 to 40%; sulphides, 2%.

Capacity: 175 t.p.d.

Assays: Feed as above; concentrate, 85% kyanite.

Recovery: 80%.

Ratio of concentration: 8 : 1.

Water from stream 1/2-mi. by pump (15-hp.); consumption, 7 tons per ton milled; 75% re-used.

Power purchased at 33,000 volts; transmitted 2 mi. at 2,300 volts, motors, 220- and 440-volt, 60-cycle; consumption, 48 hp-hr. per ton milled.

Labor: 15 tons per man-shift operating.

Running time: 75%; 80% possible. Principal cause of loss is hammer mill repair.

Mill building: Steeply sloping site; timber frame and sheet-metal enclosure; wood floors; unheated.

Distances: 1,500 ft. mine to mill by 3-ft.-gage tramway; 3 mi. to railroad.

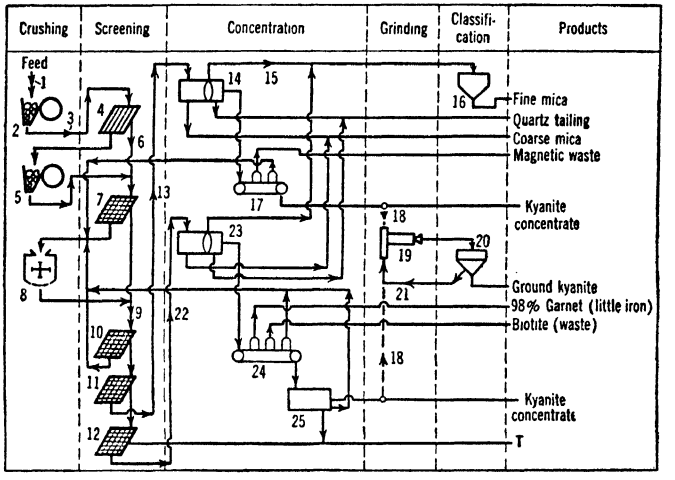

Legend for Fig. 26:

1. Side-dump cars; 80-ton bin.
2. 1 @ 15×24-in. Traylor jaw crusher, 3-in. set.
3. Belt conveyor; 350-ton bin; 24-in. vibrating-pan feeder.
4. Grizzly, 1/2-in. aperture.
5. 1 @ 9×15-in. A-C Blake-type jaw crusher, 1/2-in. set.
6. Belt conveyor.
7. 1 @ 3×5-ft. Hum-mer screen, 6-m. aperture.
8. 1 @ 24×20-in. and 1 @ 18×20-in. Jeffrey hammer mills; load controlled by ammeter reading.
9. Bucket elevator.
10. 1 @ 2-deck Link-Belt vibrating screen, 16-m. Ton-Cap on lower deck, top deck a guard only.
11. 1 @ 4×10-ft. Hum-mer screen, 28-m.
12. 1 @ 3×10-ft. Hum-mer screen, 48-m.
13. Storage; elevator.
14. 1 Sutton, Steele & Steele air table with suction hood.
15. Fine mica from suction hood.
16. Cyclone separator.
17. Dings magnetic separator.
18. Alternative.
19. 1 @ 6×9-ft. silex-lined ball mill, trunnion-fed by Traylor tubular vibrating feeder.
20. 1 @ 8-ft. Gayco centrifugal air separator.
21. Elevator.
22. As (13).
23. 2 as (14).
24. 1 Exolon-Johnson induction magnetic separator.
25. 1 Standard S., S. & S. air table.

FIG. 26. CELO MINES, INC. (Dry plant, 1940).

Summary. Three-stage crushing to 16-m. in the endeavor to liberate kyanite with as little breakage as possible; rejection of <48-m. by screen; 2- and 3-stage concentration of 16~28- and 28~48-m. sands on air tables and magnetic separators.

This plant typifies relatively simple dry separation with a concentration criterion of 1.4. The method has now (1940) been superseded by flotation (see Fig. 22).

Kyanite Products Corp., Fig. 27 (*142 # 10 J 53*).

Location: Near Pamplin, Va.

Concentrate: 58% Al_2O_3 = 92 to 94% kyanite, 1.25% Fe_2O_3, 2% free SiO_2.

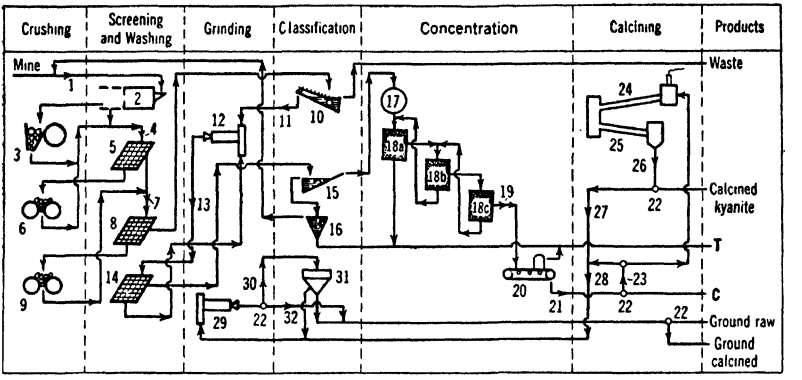

Legend for Fig. 27:

1. Mine cars; 150-ton bin; steel chute with sluicing water.

2. 1 @ 5×12-ft. rotary scrubber, 3-ft. perforated section with 1 1/2-in. rd. holes.

3. 1 @ 6×16-in. Sturtevant roll-jaw crusher.

4. Elevator, 10×6-in. buckets.

5. Vibrating screen, 3/8×3/4-in. Ton-Cap.

6. 1 @ 30×10-in. rolls.

7. 1 as (4).

8. 3×8-ft. vibrating screen, 1/8×2-in. Ty-rod.

9. 1 @ 20×14-in. rolls.

10. Esperanza classifier.

11. 20-ton bin; 20-in. belt conveyor.

12. 1 @ 3×6-ft. Marcy rod mill.

13. 1 as (4).

14. 1 @ 3×8-ft. Link-Belt vibrating screen and 1 @ 3×6-ft. Leahy screen, 28-m. apertures.

15. 1 @ 2 1/2×14 3/4-in. Akins classifier.

16. 10-ft. dewatering cones.

17. 1 @ 2-cell M-S agitator, 30 (diam.) ×48-in.; reagents added here; see Sec. 12, Art. 53, for character.

18. 1 @ 24×24-in. 10-cell M-S machine; *a* = cells 5 to 1; *b* = cells 8 to 6; *c* = cells 10, 9.

19. 1 @ 36-in.×25-ft. chain drag (overflow to waste); draining floor; conveyor; 2 1/2×20-ft. parallel-flow oil-fired rotary drier (moisture reduced from 15% to 1%); 3 @ 4×8-ft. steel bins; 4-m. trash screen.

20. 1 @ 30-in. 5-roll Dings high-intensity magnetic separator.

21. 1 @ 100-ton shipping bin.

22. Alternative.

23. 2 @ 14-in. conveyors in series; 6×4-in. elevator; 15-ton bin.

24. 1 @ 4×60-ft. rotary kiln, 2,750° F.; 3,500 lb. per hr.

25. 1 @ 3×40-ft. rotary cooler; 10 ft. lined, next 15 ft. unlined, outside-sprayed; temp. of discharge, 175° F.

26. 1 @ 6-in.×20-ft. screw conveyor; 1 @ 6×4-in. elevator; 1 vibrating trash screen (fused pellets discarded).

27. 1 @ 30-ton bin.

28. Separately.

29. 1 @ 5×16-ft. pebble mill; granite lining and pebbles (in lieu of Danish flint).

30. 1 @ 6×4-in. elevator; for 100-m. or finer grind.

31. 1 @ 10-ft. Sturtevant separator.

32. If only to 48-m.

FIG. 27. KYANITE PRODUCTS CORP.

Summary. Washing; three-stage crushing to 1/8-in.; one-stage closed-circuit (screen) grinding to <35-m.; desliming; flotation of deslimed sand; magnetic separation of dried concentrate; ± calcining and /or grinding.

At the Georgia plants of SOUTHERN MINING & MILLING CO., kyanite-mica schist is treated in a special mulling operation so that very little kyanite is broken finer than 10-m., though subsequently it may be ground to 20-m. for sale. Roofing mica and graphite are recovered from the overflow and the kyanite removed from the mullers is screened to eliminate sand. The process is patented (*U. S. patent 2,105, 597*). According to Boyd (*19 Bul ACerS 461*), the soft kyanite schist, roughly hand-sorted, is passed over a 2-in. grizzly and crushed in a 10×12-in. crusher set at about 1 in. All undersize is sluiced to a variable splitter and thence to four 16-ft. mullers, each having two 1,000-lb. rubber-covered rollers and turning 11 r.p.m. Discharge is over a 36-in. center rim. Additional water is added to each muller, and mica and graphite overflow. Each muller receives about 1 1/4 tons per hr. for 3 hr. and operates 1 hr. more to clean kyanite-sand residue, which is finally washed through 1 1/2-in. screen and elevated to a vibrating screen with 10-m. and 20-m. decks. Oversize is remulled and <20-m., chiefly sand, is wasted. Intermediate screen product goes to a mica-tailing table.

Remulling differs from primary mulling in that it allows more scuffing and less mashing; less mica is present and less water is required to remove the mica, allowing 50-m. sand to remain in the muller for better action on the kyanite. When each batch is finished, the residue, containing 65 to 85% kyanite, is split on a 3/8-in. screen, oversize going to a coarse jig and undersize, after removing <16-m. waste sand, to a fine jig. Both jigs yield a 95% product, the chief impurity being quartz.

24. LIMESTONE

Properties. Calcite is the essential constituent of limestones. High-calcium limestones may consist almost entirely of $CaCO_3$. If 10% or more $MgCO_3$ is present, the stone is called magnesian or dolomitic limestone; when the $MgCO_3$ reaches 45%, it is known as dolomite. Siliceous or cherty, argillaceous, ferruginous, carbonaceous, or bituminous limestones are also distinguished; marbles are highly crystalline metamorphosed limestones; coral, crinoid, or coquina limestones are rocks made up almost entirely of shells, while chalk is a friable limestone composed largely of minute shells of foraminifera. Oyster-shell beds may be classed as unconsolidated limestones and, where extensive, are used commercially for like purposes. Onyx and travertine are limestones deposited from solution. The well-known Indiana limestone is oölitic and ultra fine-grained crystalline limestone, usually of drab or yellowish color; it may be classed (and used) as lithographic stone. SP. GR. is usually slightly less than that of calcite (2.72) or dolomite (2.85); HARDNESS is 3, but limestones range from chalk that is easily crushed in the fingers to indurated types as tough and almost as hard as trap rock. High-calcium varieties are readily soluble in weak acid; dolomitic only in strong acid.

Occurrence. Deposits of limestone occur in every state. Stone suitable for building is quarried in about half of them, and in some states hundreds of quarries produce crushed or pulverized limestone. Ohio, Pennsylvania, Michigan, New York, Illinois, and Indiana lead in production in about the order named. Most of the building limestone, however, originates in Indiana, and Missouri limestone and lime probably have widest industrial market due to purity. Pure calcite in large transparent crystals is found only in veins; optical grades (see Art. 22) are rare.

Uses. Limestone is the most useful of all rocks, and new uses for it are continually being developed. Roughly half the dimension stone and a good deal more than half of the crushed stone used for construction is limestone; further large tonnages are employed as feed to cement plants (Sec. 3A), as metallurgical flux, as fertilizer, in chemical works, and as a filler. See also Table 11.

Production. See Table 11.

Table 11. Limestone sold or used by producers in the United States, by uses (*compiled by USBM*)

Use	1929 Short tons	1933 Short tons	1937 Short tons	1937 Value
Building stone	1,312,820	465,480	592,340	$ 5,096,535
Curbing, flagging, paving	37,940	6,310	13,690	76,806
Rubble	352,480	79,060	107,550	136,028
Riprap	2,080,580	1,566,560	2,769,640	2,891,936
Concrete and road metal	61,465,200	28,606,690	51,108,620	49,547,350
Railroad ballast			5,033,180	3,588,974
Fluxing stone	24,337,280	7,982,560	21,311,250	14,685,215
Agriculture	2,654,580	944,540	5,004,930	6,454,695
Alkali works	5,004,930	4,193,650	4,860,520	2,295,599
Calcium carbide works	339,510	117,740	472,240	266,557
Asphalt filler	344,880	126,780	351,590	686,951
Whiting substitute	125,430	93,070	194,080	923,494
Other filler	.....	13,940	95,290	212,944
Glass factories	257,370	199,720	274,770	460,352
Magnesia works (dolomite)	84,750	83,640	96,730	158,023
Mineral wool	83,920	55,160	146,330	116,084
Paper mills	273,880	196,440	322,810	589,091
Refractories (dolomite)	516,400	196,540	576,900	580,720
Sugar factories	487,990	607,990	566,620	862,660
Other crushed stone	927,020	386,410	678,190	1,271,863
Total shipments	100,686,960	45,922,280	94,577,270	$90,901,877
Portland and natural cement	43,612,000	16,117,000	29,547,000	Not reported
Lime	8,540,000	4,450,000	8,250,000	do.
Grand total	152,838,960	66,489,280	132,374,270	Not reported

Selling. Prices of crushed limestone vary with local conditions of cost and competition. Average annual values for the entire country have ranged from 90¢ to $1.19 per ton in recent years. Much fluxing stone is worth less than 50¢ a ton f.o.b. quarry, whereas Indiana limestone is worth over $1 per cu. ft. when cut, and at least 30¢ per cu. ft. or around $25 per short ton in rough blocks. Lime also varies greatly in price, but the average for all shipments in the United States in 1937 was $7.31 per ton at kilns.

Treatment comprises cutting for dimension stone (Art. 40); crushing for broken stone, agricultural stone, stone sand, and limestone dust (Art. 41); and burning for lime.

Ohio Marble Co., Fig. 28 (*33 #3 PQ 41*).

Location: Piqua, Ohio.
Capacity: 200 t.p.h. of flux stone; somewhat less on roadstone.
Crude: Limestone.
Products: 4~1 1/2-in. flux; 2 1/2~2-in. flux; 2 1/2~1 1/2-in. roadstone; <1 1/4-in. screenings.
Buildings: Steel and concrete.

Legend for Fig. 28:

1. 2-cyd. shovels; 5 @ 5 1/2-cyd. end-dump trucks, 3/4 mi.
2. 1 @ No. 30 A-C gyratory, 4-in. open setting.
3. 1 @ 30-in.×80-ft. inclined chain-bucket elevator.
4. 1 @ 50-ton steel surge hopper; vibrating feeder; 36-in.×40-ft. belt conveyor; 34-in.×90-ft. chain-bucket elevator.
5. 1 @ 4×12-ft. Simplicity vibrating screen, 1-in. aperture.
6. 1 @ No. 6 Traylor TY reduction gyratory.
7. 1 @ 24-in.×60-ft. belt-bucket elevator.
8. Direct to (4) when flux stone is being made.
9. 2 @ 4×10-ft. Simplicity screens, 1-in. and 1 1/4-in. sq.-perforated plate.
10. Bins, 150-ton each; discharge to cars or trucks.
11. 1 @ 4×12-ft. 3-deck Simplicity screen, 2 1/2-, 2-, and 1 3/4-in. perforated-plate cover.
12. Alternative by flip-flap in discharge chute of elevator (4).
13. 1 @ 24-in.×50-ft. belt conveyor; 1 @ 20-in.×35-ft. chain-bucket elevator.
14. 1 @ 4×8-ft. 2-deck Simplicity screen, 1-in. and 3/4-in. perforated plate.
15. 1 @ 14-in.×25-ft. belt conveyor.
16. 1 @ 3×10-ft. Low-head screen, 3/16-in. aperture.
17. Alternative or in parallel.
18. 1 @ 4×8-ft. 2-deck A-C vibrating screen; top deck has perforated-plate cover, apertures range from 1-in. to 3/8-in.; bottom deck, 2 sizes of aperture down to 3/16-in. minumum.
19. Alternative.
20. 8 @ 200-ton concrete bins loading to cars or trucks.
21. Sturtevant rock-emery mill; two ball-tube mills; Hum-mer screens; rotary drier; air-sizers; bag packers.

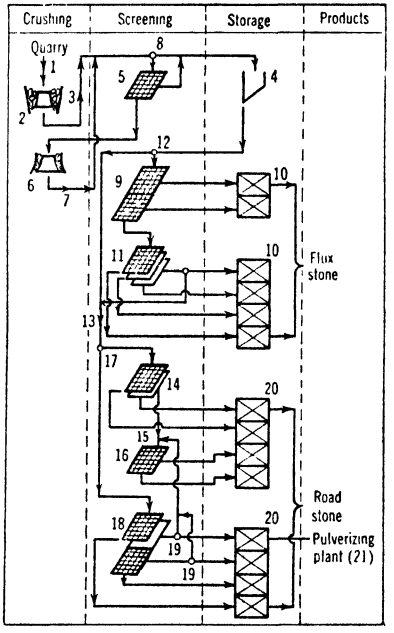

FIG. 28. OHIO MARBLE CO.

Summary. Dry processing for upwards of 14 flux stone and roadstone sizes and for grits and dust for poultry and cattle, fillers, concrete finishes, etc.

At INLAND LIME & STONE CO., Port Inland, Mich. (*21 #8 PQ 53*), limestone is crushed at the rate of 750 t.p.h. from large steam-shovel size to six grades between 14-in. and 1/8-in. in a sequence comprising a 10-in. grizzly, a 60-in. gyratory, 2 @ 6-in. live-roll grizzlies, a 20-in. gyratory, a 7-ft. standard cone crusher, and a battery of vibrating screens with 2 1/2-, 1 1/4-, 5/8-, and 1/8-in. apertures with conveyor provisions for closing circuit on the cone crusher from both the 2 1/2- and the 1 1/4-in. screens; <1/8-in. material is wasted. Open storage is provided to carry over the closed season on Lake Michigan and permit loading out during open season at 3,000 t.p.h. Roller and ball bearings are used throughout the plant, upward of 20,000 units in all.

At LIBERTY LIMESTONE CORP., Buchanan, Va. (*44 #8 RP 29*), a hard dolomitic limestone is processed for ballast, aggregate, stone sand, and agricultural limestone. Flowsheet permits much bypassing and variation in products by changing screen covers. Crushers are a 24×36-in. jaw crusher, a 36-in. Gyrasphere, and a No. 25 Kennedy gearless in sequence, with 4×12-ft. @ 3-deck Niagara screen between Gyrasphere and Kennedy crushers, and a 4×10-ft. @ 2-deck Niagara following the Kennedy. For ballast the flow is from the jaw crusher direct to the 3-deck screen; otherwise the Gyrasphere intervenes. Agricultural limestone (<10-m.) is made from dry <3/4-in. stone in a Kent mill or a Sturtevant ring-roll mill in closed circuit with 10-m. vibrating screens; if the feed is wet, it is sent to a 5-roll Raymond high-side mill working with hot air. Stone sand is made from sound stone (not screenings) in dry rod mills in closed-circuit with vibrating screens and an air separator; dusts come from the air separator.

Mathieson Alkali Works, Fig. 29 (Ref. as for Fig. 30).

Location: Saltville, Va.

Summary. Two-stage crushing at quarry, with intermediate scalping, to <6-in.; splitting <6-in. material at 3-in.; scrubbing 6~3-in. and burning in shaft kilns to produce

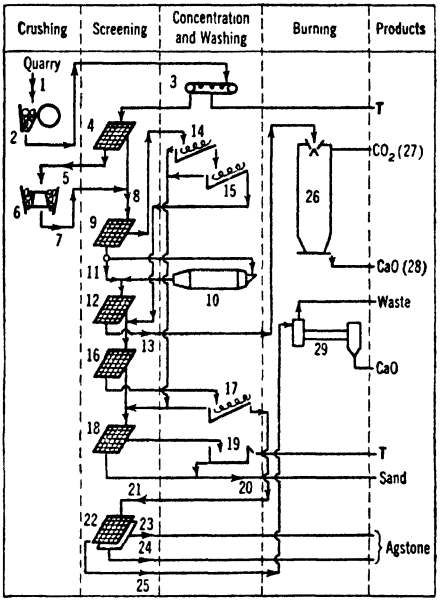

Legend for Fig. 29:

1. Shovel; side-dump cars in 4- to 6-car trains 1,000 to 1,500 ft. on quarry floor; 1 @ 5×12-ft. pan feeder, push-button control.

2. 1 @ 48×60-in. Traylor jaw crusher, 9-in. open setting, 1-in. throw.

3. 1 @ 36-in. inclined conveyor belt; clay and waste hand picked.

4. 1 @ 5×6-ft. revolving stone screen, 7 1/4-in. rd. openings.

5. 1 @ 24-in. pan conveyor.

6. 1 @ 15-in. gyratory crusher, 6-in. open setting.

7. Bucket elevator; 24-in. inclined conveyor.

8. 1 @ 36-in. tripper conveyor; cableway loading bin; cableway, 3 to 4 mi.; receiving hopper; apron feeder.

9. Roll grizzly, 3-in. aperture.

10. 1 @ 5×25-ft. revolving scrubber.

11. Dry-weather by-pass: 30-in. belt conveyor.

12. Roll grizzly, 3-in. aperture, washing sprays.

13. 2 @ 30-in. inclined belt conveyors in series; 1 @ 30-in. bridge conveyor with 30-in. wing-tripper conveyor; hillside open storage; 2 tunnels with shuttle feeders; 2 @ 24-in. parallel belt conveyors; cableway feed hopper; cableway.

14. 1 @ 2-screw, 60-in. Perfect washer (see Sec. 10, Art. 5).

15. 1 as (14).

16. 1 @ 3×6-ft. Niagara screen, 1/4-in. aperture.

17. 1 as (14).

18. 1 @ 2×6-ft. Niagara screen, 1/16-in. aperture.

19. 1 @ 6×8×30-ft. settling tank.

20. R.R. car.

21. 1 @ 24-in. belt conveyor.

22. 1 @ 3×8-ft. 2-deck Niagara screen, 1 1/2- and 5/8-in. apertures.

23. Bin; R.R. car or trucks.

24. As (23).

25. Loading pocket; cableway.

26. Vertical kilns, mixed-feed type.

27. To absorption plant.

28. To hydration.

29. Rotary kiln.

FIG. 29. MATHIESON ALKALI WORKS, Saltville plant.

concentrated (40%) CO_2 gas and high-grade lime; 3-stage washing of <3-in. with removal of <1/4-in. before the third stage; grading of 3~1/4-in. into 3~1 1/8-, 1 1/8~1/2-, and 1/2~1/4-in. for separate burning in a rotary kiln; washed <1/4-in. sold for concrete sand or burned in a rotary.

Mathieson Alkali Works, Fig. 30 (W. D. Haden Co. *vs.* Mathieson Alkali Works, *U. S. District Court, Western La., No. 774 in Equity*).

Location: Lake Charles, La.
Crude: Oyster shell from Calcasieu Pass, La.
Capacity: 700 t.p.d.
Analyses: See Table 12.

Table 12. Feed and products at Mathieson Alkali Works, Lake Charles

Item	Percentages		
	Washed shell *b*	Lime	
		Random grab	Range of 33 grabs *a*
SiO_2	0.39	0.99	0.36 to 2.03
Fe_2O_3	0.07	0.19	0.05 to 0.35
Al_2O_3	0.05	0.14	0.07 to 0.33
CaO, total	.....	94.38	88.42 to 95.98
CaO, active	.....	85.52	74.45 to 90.29
MgO	.....	0.67	0.57 to 1.31
$CaCO_3$	96.59	5.19	0.89 to 17.33
$MgCO_3$	1.08	.....	.....
$CaSO_4$	0.38	0.74	0.51 to 0.74

a Over 12 days.
b 60-lb. grab sample from conveyor M (Fig. 13).

Legend for Fig. 30:

1. Suction dredge at Calcasieu Pass.

2. 1 @ 6×16-ft. wash trommel on dredge, 1/4-in. aperture, 15 r.p.m., annular constriction plate 12 in. high at about 5 ft.

3. Overboard.

4. Belt-conveyor stacker to barge alongside dredge; barge by tug 30 or 40 mi. to Lake Charles dock; clam-shell bucket.

5. Conical receiving hopper, 21 (diam.) × 10-ft.

6. 1 @ 3×30-ft. inclined pan conveyor *A* (Fig. 31; all subsequent references to lettered conveyors are to the same figure), 50 f.p.m.; 1 @ 24-in.×61-ft. inclined (+11°) belt conveyor *B*, 272 f.p.m.

7. 1 @ 9×28-ft. revolving-screen washer, 1 1/4-in. rd.-hole plate, 6-in. longitudinal lifters; 5×5-m. (1/8-in.) aperture jacket; central wash pipe with 1/2-in. jets, 2,500 g.p.m. for 100 t.p.h.; 7 r.p.m.; slope, 3/8 i.p.f.

8. By-pass conveyor *C*.

9. 1 @ 24-in.×40-ft. belt conveyor *D*, 300 f.p.m.; 1 @ 24-in. main conveyor *F* into and out of storage (10), 279 f.p.m.; 1 @ 24-in. pivoted inclined stacking conveyor *G*, 325 f.p.m.

10. Open storage (see Fig. 31); capacity to this point about 100 t.p.h.

11. Stockpile loader; 30-in. belt conveyor *H*, 180 f.p.m.; conveyor *F*; 24-in. inclined conveyor *J*, 267 f.p.m.; 24-in. inclined belt conveyor *M*, 273 f.p.m.; kiln-feed hopper; 2 constant-weight feeders; 2 star feeders.

12. 2 @ 6 3/4 (305 ft.), 6 1/2 (15 ft.), 11 1/2 (30 ft.), 6 1/2 (10 ft.) × 360-ft. kilns; slope 1/2 i.p.f.; 3/4 to 3 m.p.r.; temperature in burning zone, 2,550° F., exit gas, 400° to 750° F.; time-factor at 1 m.p.r., 205 min. in preheat section, 176 min. in burning section; lime at exit, 2,100° F.

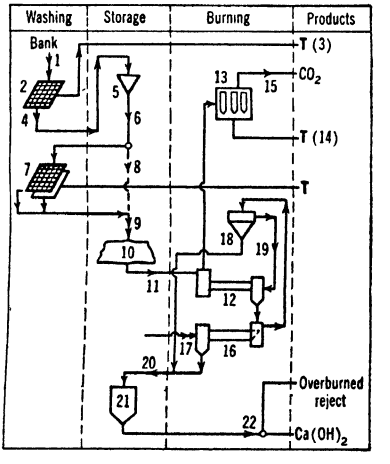

13. Multiclone dust collector (see Sec. 9, Fig. 14).

14. High-silica dust.

15. Scrubber.

16. Pan cooler.

17. Air from blower.

18. Cyclone separator.

19. Primary and secondary air, 600° F.

20. Screw conveyor; bucket elevator.

21. Slacker-feed bins.

22. Slacker; vibrating screen.

FIG. 30. MATHIESON ALKALI WORKS, Lake Charles plant.

Summary. Two-stage screen washing of whole dredged shell; burning in a long rotary kiln with recuperation on the lime; slaking and rejecting overburned waste by fine wet screening.

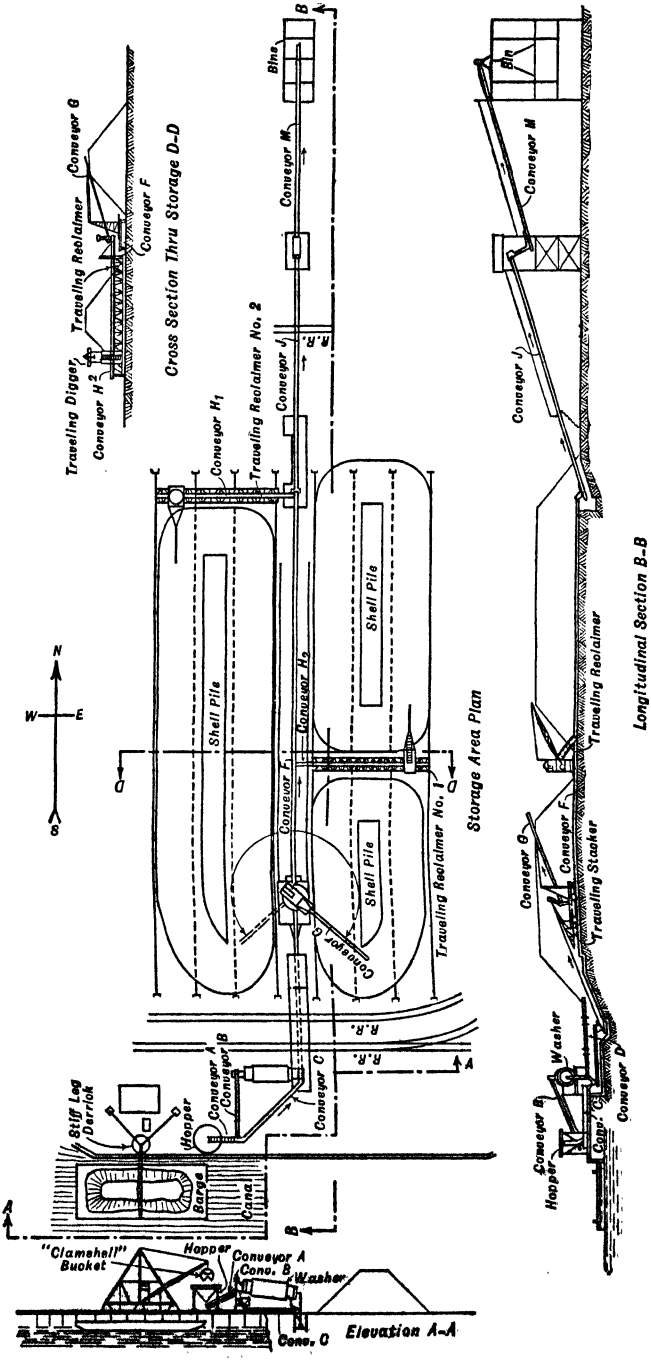

Fig. 31. Storage and transport at Matthieson Alkali Works, Lake Charles plant.

Lime Burning

When carbonates are heated sufficiently they decompose, evolving CO_2 and leaving behind the corresponding oxides. The temperature of dissociation depends upon the carbonate, which determines the dissociation pressure, and upon the partial pressure of CO_2 in the surrounding atmosphere. The dissociation pressure of $CaCO_3$ becomes 760 mm. at about 900° C., *i.e.*, dissociation occurs at this temperature in an atmosphere of CO_2. The corresponding temperature for $MgCO_3$ is about 760° C. The temperature for dolomites depends upon the relative percentages of the two carbonates present, the mixture tending to act as a double salt, giving decomposition temperatures lying between those for the pure carbonates (Porter, *Circ 337 USBS 8*). Temperature-time relation for the two stones are given in Figs. 32, 33. If, however, the partial pressure of CO_2 in the surroundings is less than 760 mm., as is invariably the case in an operating kiln where a CO_2 content of 40% in the gas is high, the initial dissociation temperature is lower. The relationship for $CaCO_3$ is given in Fig. 34 (Knibbs, *10 CLM 6*).

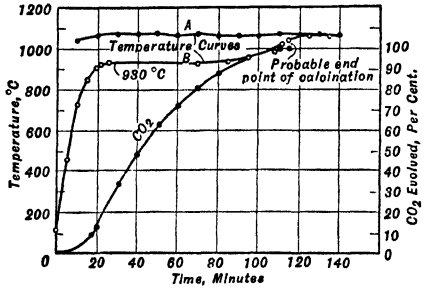

A, surface temperature; *B*, center temperature.

FIG. 32. Decomposition of high-calcium limestone at 760 mm. CO_2.

When a lump of stone burns without mechanical removal of the CaO as formed, this remains as a shell around an unaltered core, and the reaction interface proceeds inwardly through the lump as a relatively sharply defined surface which, by reason of an accelerated rate at the projecting edges and corners, tends to reduce the core toward a spherical configuration (Conley, *148 A 330*). As soon as the shell of lime reaches visible thickness, the CO_2 content at the reaction interface rises to 100%, with corresponding increase in dissociation temperature.

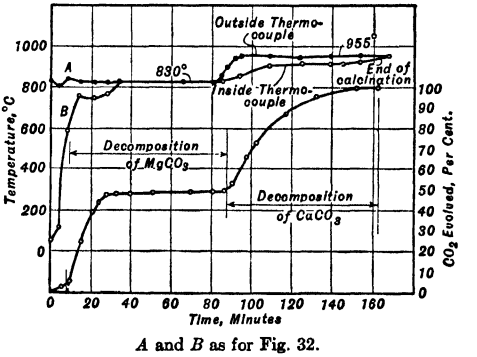

A and *B* as for Fig. 32.

FIG. 33. Two-stage decomposition of dolomitic limestone at 760 mm. CO_2.

Rate of dissociation, as measured by the inward movement of the reacting surface, increases with temperature. Rate as determined by Conley (*ibid.*) is shown in Fig. 35,

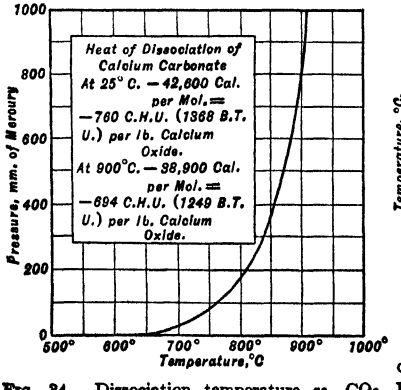

FIG. 34. Dissociation temperature *vs.* CO_2 pressure for calcium carbonate.

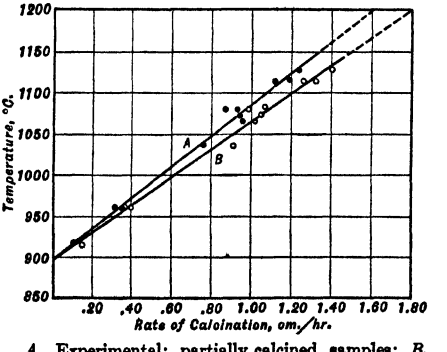

A, Experimental; partially calcined samples; *B*, calculated for complete calcination.

FIG. 35. Temperature *vs.* calcination rate for high-calcium limestone at 760 mm. CO_2.

curve *A;* curve *B* shows for comparison other rates calculated by a rate equation $R = (0.5254T - 470.2)/100$, in which R = rate of inward movement of the reaction surface in cm. per hr., and T = temperature *of the lump* in °C.

Burning temperature. The natural inference from the rate curve, *viz.*, that operating furnace temperatures should be as high as the linings will permit, must, however, be modified because excessive temperatures produce limes that hydrate slowly and incompletely. Such limes are called OVERBURNED. Overburned lime is denser than normal lime, the higher density corresponding to closer packing of the atoms incident upon larger crystal units (*42 #5 RP 40*). It also contains particles coated with, and to a certain extent impregnated by, glasses and/or compact crystalline shells, films, and granules which close the pores of the lime and hinder or prevent access of water in hydration. These films, etc., form owing to the fact that in practice all natural stone contains impurities having acidic characteristics (Fe_2O_3, Al_2O_3, SiO_2), which react at calcining temperatures with the basic oxides to form compounds fused at these temperatures. The amount of such compounds formed is greater the greater the amount of impurity (see Fig. 36) and the higher the temperature. There is practically no overburning at 1,000° C., even with long exposure. Hence operating temperatures are an economic compromise between the drive for high capacity per burning unit and the salability (or hydrate yield) of the resulting lime. Actual stone temperatures in operating kilns are not known. Such measurements as have been made are of gas temperatures. The range reported for burning high-lime stone in shaft kilns is from 1,250° to 1,650° C.; temperatures for dolomitic stone are lower. In general, also, temperatures for small stone of a given composition are less than for large.

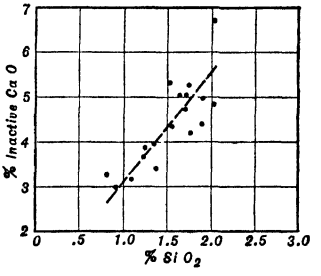

FIG. 36. Effect of silica in producing inactive lime.

Recarbonation occurs when lime at temperatures above 500° C. is exposed to an atmosphere containing CO_2. The reaction goes with increasing velocity as dissociation temperatures are approached. Furnaces are designed either to prevent contact with CO_2, or to chill rapidly through the recarbonation range.

Kilns

Kilns for lime burning are either of shaft (vertical) or rotary (horizontal) types; the former are used for small capacities, or where the demand is for lump lime; rotary kilns are usual for high capacities.

Shaft kiln consists essentially of a stack, relatively short as compared with its horizontal dimensions; of square, circular, or oval cross-section; with or without internal taper. Means for heating, charging rock, retaining rock in the shaft, and discharging must also be provided.

Shaft. Typical longitudinal sections, used with all forms of transverse section, are shown in Fig. 37. Each has advantages and disadvantages. Form *A*, usually circular, is cheapest to build, the charge falls freely unless there is considerable overburning, and there is a minimum of horizontal movement with resultant crushing; on the other hand, channeling tends to occur along the walls owing to shrinkage of the stone in burning added to the initial greater void space in this region. Form *B*, with a maximum taper of 1 : 30, is not usual, since it is unnecessary to aid the fall of charge in other than exceptional cases, and it accentuates wall channeling and horizontal movement as compared with the vertical wall. Forms *C* and *D* have been used[4] extensively in mixed-feed kilns (*post*) since they have the double advantage of decreasing the size of feed and discharge arrangements, and of spreading out the charge in the firing zone; the converging bottom aggravates any tendency to stick, however. Form *E* is used in gas firing with the idea of decreasing the horizontal distance to which the fuel, introduced at the throat, must penetrate; and with furnace firing, in order to converge the stone and hot gases and thus insure even heating in the hot zone. Form *F*, with many modifications in the way of bulge and constriction, has been used for a variety of purposes, *e.g.*, in the Aalborg type, to help in the introduction of solid fuel through the wall under the constriction; in top-fed mixed-feed types, to decrease segregation; in furnace-fired types, for convergence of the opposed streams, as in Form *E;* and generally, in order to cause horizontal rearrangement of the charge.

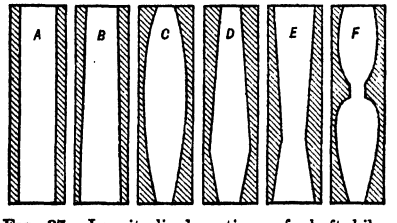

FIG. 37. Longitudinal sections of shaft kilns (*after Knibbs*).

Firing. Both solid and vaporous fuels are used, burned either in the charge or in an external furnace. With external furnaces and/or vaporous fuels the vapors enter two or more ports through the shaft walls at the bottom of the burning zone; their ability to penetrate horizontally and evenly into the

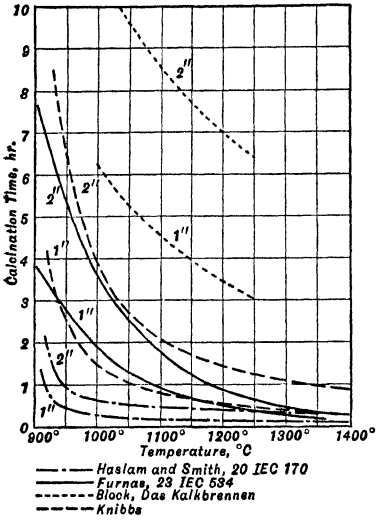

FIG. 38. Rate of calcination, 1- and 2-in. limestone.

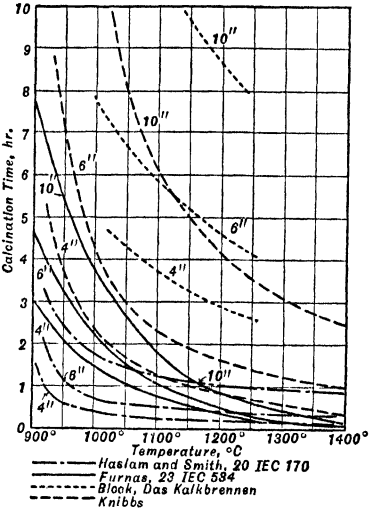

FIG. 39. Rate of calcination, 4-, 6-, and 10-in. limestone.

mass of stone limits the horizontal dimensions of the kiln. Practice has shown that the maximum distance of reasonably even penetration into 6-in. stone of short size range is about 4 1/2 ft. (*10 CLM 59*); the distance decreases rapidly with longer-range stone and for smaller sizes. To obviate this difficulty, solid fuel is frequently charged admixed with the stone (or if charged separately, admixes in the downward travel). Kilns thus operated are described as MIXED-FEED types. The disadvantage of mixed-feed firing is that all of the ash is mixed with the lime, increasing the tendency to overburning, requiring to be screened out of the product, and inevitably increasing its impurity content.

Dimensions of shaft. The shaft consists of three roughly defined zones: (1) a preheating zone, extending downward from the charging level to the height at which the stone first reaches dissociation temperature; (2) a burning zone, comprising the space in which active dissociation occurs and extending vertically from the bottom of the preheating zone to the bottom of the zone of active combustion, or of hot gas introduction; (3) a cooling zone, extending from the bottom of the burning zone to the point of discharge. The preheating zone should have sufficient volume to allow transfer to the stone of most of the heat of the gas leaving the burning zone; the burning zone must have sufficient volume to hold the stone until calcination is complete; and the cooling zone should be large enough to hold the lime until, by radiation and conduction, its temperature has been reduced to a point that permits final handling without further cooling.

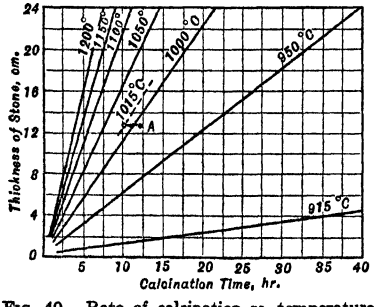

FIG. 40. Rate of calcination *vs.* temperature and thickness of lump; high-calcium limestone at 760 mm. CO_2.

Cross-section. The smaller horizontal dimension in the burning zone of a furnace- or vapor-fired kiln taking coarse feed should not exceed 9 ft.; mixed-feed types may be larger, but usually are not. The largest minimum horizontal dimension in the burning zone of 233 shaft kilns reported on by Porter (*loc. cit.*) was 9 ft. 8 in. for a circular kiln; the smallest minimum was 4 ft. 6 in.; average diameter of 76 CIRCULAR KILNS was 7.2 ft. Of 117 ELLIPTICAL KILNS, the maximum length was 16 ft., the maximum width 7 1/2 ft.; corresponding minima were 5 1/2 and 4 1/2 ft.; averages were 6.8 and 5 ft.

Height of burning zone, taken with cross-section, determines the time-factor for a given production. For estimation, short-range compact limestone (sp. gr. 2.7) may be taken to have a struck-volume density of 95 lb. per cu. ft.; long-range stone will run 100 lb. or more. Burning time at usual firing temperatures for stone of various sizes, as compiled by Knibbs (*loc. cit.*), is given in Figs. 38 and 39; similar data based on Conley's equation (p. 52) are shown in Fig. 40. On the basis of these data, volume may be calculated.

Proportionate heights of the three zones (assuming substantially straight sides) depend upon the quantities of heat to be transferred and the relative rates of transfer. Knibbs (*loc. cit.*) estimates quantities in Table 13.

Table 13. Heat transfer in zones of a shaft kiln *a*

Zone	Temp. rise, °C.	× Sp. ht.	× Conversion factor	+ Heat of dissociation	= B.t.u. per lb. of lime
Preheating.....	900	0.27	3.2	.....	778
Burning.....	200	0.22	1.8	1,250	1,329
Cooling..	1,100	0.21	1.8	.....	415

a Assuming a stone temperature of 1,100° C. and the cycle as from 0° to 0° C.

Transfer rates depend on the temperature differentials between stone and gases, concerning which little or nothing is known except at the top of the kiln. Hence the proportionate heights, as estimated from heat quantities in the above table, must be considered wholly approximate. Fig. 41, after Knibbs, represents another approach to the problem. Maximum total height of the 233 kilns reported on by Porter was 60 ft.; minimum, 5 ft.; average, 20.6. Calcination temperature is usually reached about 8 ft. above the grates (*IC 6884*). Knibbs summarizes the factors influencing kiln height as follows: In a tall kiln, heat transfer and, consequently, heating efficiency are better; solid falls more evenly, feed distributes better, and even discharge from the full cross-section is more readily effected; gas is more readily distributed and upward flow is more uniform. In the short wide kiln, power consumption for elevation of feed (and fuel) and for draft is less; there is less breakage; initial cost of kiln and maintenance (relining) are lower; radiation losses are lower; and the percentage of peripheral voids is less. (For detailed discussion of the incidence of these factors see *10 CLM 139*.) The modern trend is toward high kilns.

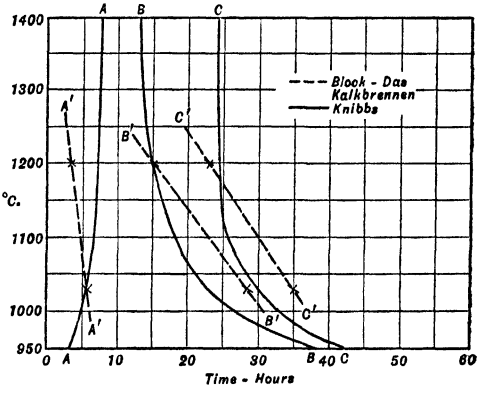

FIG. 41. Times for preheating, burning, and cooling; 6-in. stone.

Capacity of modern shaft kilns on 6-in. stone is about 1 ton of CaO per sq. ft. of cross-section per 24 hr. with 3-in. draft (Azbe, *44 #5 RP 68*). Finer stone can be burned but requires more draft. However, it calcines more quickly because of greater surface, if heat is properly distributed.

At UTAH LIME & STONE Co., Salt Lake City (*45 #1 RP 103*), 5/8~3/16-in. stone is burned in a 14(high)×4 1/2×7-ft. shaft kiln at the rate of 1 ton of CaO per day per sq. ft. of inside cross-section. Discharge is automatic and continuous. Temperature of exhaust gases is 520° F., and that of discharged lime 135° F.

Shell is usually of steel; brick, stone, and reinforced concrete are also used.

Linings are different in different parts of the kiln, and differ also according to the way in which the kiln is operated. If travel is relatively continuous, the duty of the lining in the PREHEAT ZONE is primarily to resist abrasion, and hard clay brick (paving brick) or fire-clay brick is ordinarily used. Cut stone may be used, but is normally more expensive than brick. Lining in the BURNING ZONE is subject to corrosion by the lime, and to abrasion of the resulting softened surface by the falling charge. Fire-clay refractories are commonly used; quartzite block and high-silica brick have also been used to a considerable extent. High-alumina refractories have been used, but they flux rapidly with lime at temperatures below the overburning temperatures of some limes. THICKNESS is usually 8 to 18 in. COOLING ZONE is lined at the top with the same material as used in the burning zone; below this point the principal requirement is sufficient crushing strength to withstand the weight of the brick above, since it carries the entire weight of this.

Insulation. Heat lost through kiln walls ranges from 5 to 25% of the total heat supplied, according to the amount and character of insulation; the percentage based on the burning zone may run as high as 50 or 60% (*10 CLM 148*). The extent to which insulation is applied depends upon resolution of the economic balance between fuel consumption and liner life. The problem arises only in the burning zone, since there is excess heat in the other zones. Insulation of the burning zone lowers the rate of heat transfer away from the inner surface of the liner, with the result that it is raised to the temperature of relatively rapid reaction with the lime. Many kilns have been run without insulation where fuel was cheap, the liners being run down to the point of failure by crushing. With high fuel costs, however, the trend is toward use of a good refractory lining and good insulation. Usual insulating materials are porous brick (fire clay or infusorial earth), or granular or fibrous fillings such as sand, clinkered ash, broken brick, asbestos, and slag wool; any material should have sufficient crushing resistance to lend support to the lining.

Charging. Kilns may be open or closed at the top, depending upon the draft necessary and upon whether use is to be made of the CO_2 content of the gases. Open-topped kilns are usually built up at the top with some outward flare for a sufficient distance to afford storage for a 24- to 48-hr. supply of rock to tide over short interruptions in supply. Closed-top kilns require provision for relatively gas-tight entry of feed, either by a star-type feeder (Sec. 18, Art. 22) or the like, or by some form of bell feeder (Fig. 42), comprising a conical (or pyramidal) hopper *a*, carried on a steel shell *b* comprising an extension of the kiln shaft; and a heavy conical (or pyramidal) bell *c*, closing the bottom of *b* by either upward or downward movement (as shown), and suitably guided on stem *d* for accurate closure. The bell is usually mechanically operated, but may be counterweighted for manual operation. Flue *e* leads to a stack or an absorption chamber. When stacks are used for draft, they are best made converging extensions of the kiln walls, with provision for quick charging through doors.

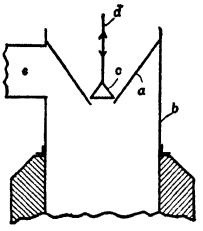

FIG. 42. Diagram of bell feeder for a shaft kiln.

Elevation of rock (and fuel) to the charging floor may be by conveyor, in which case auxiliary storage hoppers are usually necessary, or by cars lifted on vertical hoists to a charging floor, or by inclined or vertical skips discharging directly to the bell hoppers.

Discharge is effected by a variety of means, a number of which, as pictured by Knibbs (*10 CLM 81, 83*), are shown in Fig. 43. Forms *A* to *F*, comprising, in order, an apron conveyor, a revolving table, revolving grates (*C* and *D*), a push grate (*E*), and push feeder

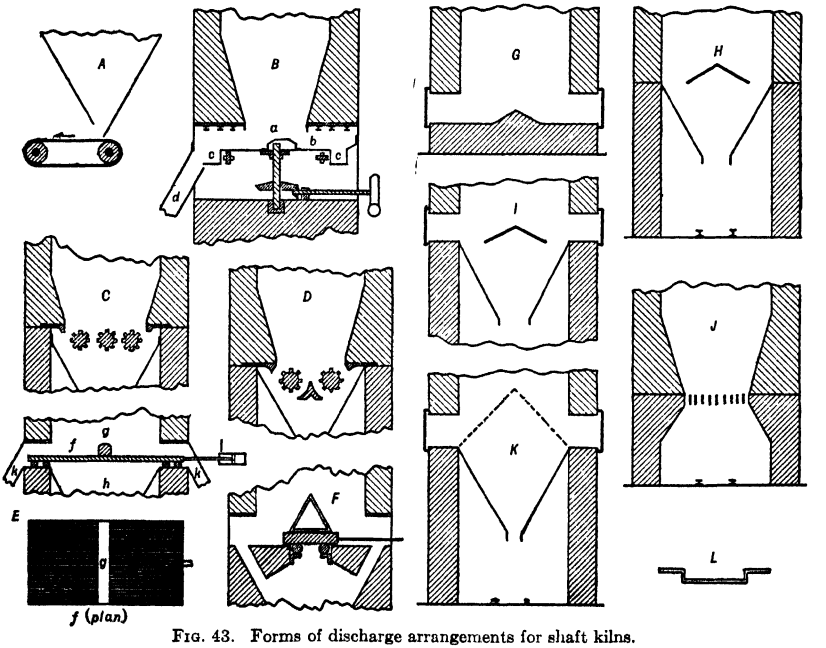

FIG. 43. Forms of discharge arrangements for shaft kilns.

(*F*), are for continuous discharge; forms *G*, *I*, and *J* are for intermittent discharge on small kilns, material being hoed out in *G*, barred into the hopper in *I*, and released by turn or removal of grates in *J*.

Fuels. For discussion of fuels and thermal efficiencies see Vol. II. See also Knibbs, *10 CLM 209, 240, 274, 301; 11 CLM 14;* Hardgrove, *148 A 398;* Green, *148 A 1396;* Porter, *loc. cit.*

Eldred process for firing shaft kilns comprises recirculation of a part of the flue gas (usually drawn some distance below the top of stone) through the grate of a furnace-fired kiln. The effect is to cool the grate, partly by heat transfer therefrom to the cooler air, partly by cooling the bottom of the fire

bed by the endothermic reduction of CO_2 in the return gas to CO. This burns again above the bed, serving to lengthen the flame. Steam fed under the grate acts similarly, being reduced to H_2 and CO; the amount required ranges from 0.3 to 0.6 lb. per lb. of coal. The effect of the longer flame is also to reduce time-factor in the kiln slightly (*TP 415 USBM*).

Rotary kilns, originally adopted from cement practice for burning the spalls (fines) produced in breaking lump lime for shaft kilns, are now used generally for most large daily production of stone lime, and for all production of shell lime and lime from sludges.

Construction is the same, in general, as that for cement kilns (Sec. 3A, Fig. 7), differing therefrom primarily in that provision must be made for supplying heat at the maximum level for a longer time in the lime kiln. This provision normally comprises an enlarged section of relatively short length in the region of maximum flame intensity near the discharge end. SIZES range in general from 5 or 6 × 100 ft. to 7 or 8 × 400 to 425 ft. inside. SLOPE is normally from 1/2 to 3/4 i.p.f. SPEED is best made variable; the usual range is from 3/4 to 3 m.p.r. FIRING, always from the discharge end, is by gas, oil, or powdered solid fuel. RECUPERATION from hot lime is commonly practiced in large kilns. Attempts at recuperation from kiln gases have been made, but have proved unsatisfactory except by outside preheating and in waste-heat boilers. Even in such cases, the saving after amortization of the additional equipment is small.

Operation

Operation of a kiln involves a balance of time, temperature, and heat distribution.

Time is controlled in a vertical kiln by rate of withdrawal; in a rotary, once the slope is fixed, by the speed of revolution. An empirical relation between kiln dimensions and travel for a rotary is (*TP 384 USBM*)

$$t = 1.77Fl\sqrt{\theta}/pdn$$

in which t = time in kiln, min.; l = length, ft.; p = slope, degrees; d = inside diameter, ft.; n = r.p.m.; θ = angle of repose, dry, in degrees; and F is a factor dependent upon the longitudinal configuration of the interior surface. For a kiln of uniform cross-section, $F = 1$. Values of F for three different conditions of restriction of cross-section are given in the following equations:

Constriction higher than uniform surface of bed:

$$F = e^{[(0.12l/d' - 3.86)\ \log\ 2.5\ v_f/nv_0 + e^{2.3 - 0.32l/d'} - 1]h/(d° - 2h)}$$

where e is the Naperian base, v_0 = volume of kiln, v_f = volume of feed per hr., h = height of constriction, d' = diameter of constricted portion, and $d°$ = diameter of kiln, units of volume and length respectively being chosen the same.

Constriction at discharge end and lower than bed surface:

$$1/F = 2.5v_f(0.34 - 0.64d°/d')/nv_o + 1.16$$

Constriction not at discharge end and lower than bed surface:

$$F = [d°/d' - (0.8 - 0.3l/d°)]/(0.3l/d° + 0.195)$$

For a kiln with an expanded portion, calculate separately for the two sections.

Time necessary is determined, for any given temperature, by the character and size of stone, and the CO_2 content of the kiln gases, as has already been discussed; also by the effect of the movement of the stone on the layer of lime surrounding the unburned core. The rotary kiln rubs off this lime layer, to a certain extent at least, as it forms. To that extent, therefore, it reduces the CO_2 pressure at the reaction surface and decreases the temperature that must be maintained on the lime surface to drive heat through to the core at a rate economical from the standpoint of equipment and labor. A time-factor of 1 hr. minimum in the burning zone has been found sufficient with whole oystershell, and yet shorter time for <1-in. crushed shell.

Size of stone is important from a number of standpoints. In a SHAFT KILN it determines the resistance to gas flow and consequently the uniformity of heating and the energy that must be expended in producing draft. The larger the stone the longer it must be exposed to heat for complete burning, and the greater the temperature differential that must be maintained to drive heat from the lime surface to the core surface. If the lump is too large, surface temperatures must be so high that the surface of the lump overburns while there is still unburned core. Usual maximum is 6-in. thickness. Long-range feeds have less interstitial volume than short range, and hold less hot gas (and less heat) at a time than short range. They also offer more resistance to gas flow. Fine short-range feeds have smaller and more tortuous interparticle passages than coarse, and so increase resistance to gas flow. In general, 2 1/2 to 3 in. is the minimum particle thickness for shaft

kilns. If long-range feeds are to be burned in one shaft kiln, it is better to size and either run on one short-range size at a time, or charge the different sizes in layers.

ROTARY KILNS are limited to finer feeds than shaft kilns both because they are not adapted to afford the necessary time factor for large lumps, and because the lumps will not stand the battering of coarse material. Usual maximum for stone is 1 1/2- or 2-in. square-mesh, corresponding to 0.9- to 1.2-in. thickness; usual minimum is 1/4-in. square-mesh. Fine chemical sludges are also burned. Normally the sand sizes from raw stone are not burned, both because of concentration of impurities in these sizes, and because of the long size ranges involved (*e.g.*, 1/4-in.~100- or 200-m. = 43 or 86 : 1), but if there is enough of this fine material to justify shortening the range and burning the sizes separately, or if the entire feed is fine (*e.g.*, coral sand or shell marl), then burning is readily possible. Feeds of long size range in a rotary tend to segregate, with the fines concentrated in the center and shielded from all means of heat supply. As a result the coarse material may come through overburned while the fine still contains core (as much as 20 to 25%). Stone 2~1/4-in. has been sized into as many as six short-range grades to eliminate overburning. Even this is not always successful, since some stones shatter when suddenly introduced into the hot exit gases (*33 & 12 PQ 43*).

Temperature in shaft kilns has been discussed (p. 52). In rotary kilns, temperature is under much more rapid and complete control of the operator. Heat transfer in the rotary is effected by direct radiation from the flame, by radiation from the exposed wall, by conduction from the gas, and by conduction from the buried wall. The principal heat supply in the burning zone is the radiant energy from the flame. This is subject to ready variation both in intensity and extent along the kiln. Dust shields much of the preheating zone from the flame; hence here the major supply is the gas, that part of its heat content taken up by the lining being given back, in part, by radiation and direct conduction.

Actual temperature measurements in a rotary burning zone are difficult and uncertain. Usual estimates of gas temperatures in this region range from 1,400° to 1,500° C. (*32 IEC 972*); 1,250° C. has been found satisfactory for 1 1/4-in. spalls, and yet lower temperatures for shell in long kilns (*PC*). Temperatures of exit gases (more easily and accurately measured) are 650° to 750° C. in long kilns without recuperators; much higher in short kilns, because of the necessity for a higher temperature gradient to effect the necessary preheat in the short time available.

Gas velocity. Heat transfer for a given gas temperature is higher the greater the gas velocity, both because of thinning of the stationary (or slow-moving) gas layer at the solid surface, and because of increase in the CO_2 concentration gradient. Consequently lower temperatures can be carried, and less overburning will occur. On the other side, high gas velocity requires either increase in gas volume above that resulting simply from combustion, decrease in cross-section of the gas stream in the kiln, or increase in draft differential.

Design of kiln involves primarily consideration of the size and purity of the lime to be produced; the tonnage to be treated; the character of the feed; the available fuel; and whether CO_2 is to be recovered. LUMP LIME can be produced only in shaft kilns. HIGH-PURITY LIME requires gas (or oil) firing. High daily tonnage requires either a plurality of shaft kilns or a rotary, with first cost and operating cost per ton of product so much in favor of the rotary that it must be selected, unless lump lime is demanded. If the available feed is fine, or, if coarse, it disintegrates under burden, a rotary must be used. All fuels are adaptable to either type of kiln; and high concentrations of CO_2 can be attained in the exit gases with either type, although the design and operation necessary for shaft kilns are better known and consequently this type has been favored for CO_2 recovery until recently. Advocates of rotary kilns list as outstanding advantages: (*a*) ready control of draft, (*b*) steady temperature of exit gas, (*c*) ready control of lengths of temperature zones, (*d*) control of secondary air, (*e*) possibility of control of temperature according to size of feed, (*f*) more complete burning (0.25% CO_2 in run-of-kiln product), (*g*) material decrease in quarry waste and quarry labor, much more than offsetting the cost of mechanical crushing, washing, and sizing for rotary burning, (*h*) attendance for a shaft kiln is one man per 1 or 2 kilns (8 to 25 tons of lime per day each); one man can attend 2 or 3 short rotary kilns or 1 or 2 long kilns with daily tonnages of 175 to 400 each. Meade (*19 IEC 698*) cites a shaft-kiln operation with 6 kilns where labor was 2.2 man-hr. per ton, and a rotary operation requiring 0.6 man-hr. per ton.

The factors entering into the design for shaft kilns, in so far as they are generally known, have already been considered. For greater detail see Knibbs, *10, 11 CLM*, at various pages; also catalogues of the manufacturers of the various equipment.

Choice of rotary kiln. Mechanical features are largely standardized in the light of experience with cement kilns, and do not differ greatly, and certainly not importantly,

as between different reliable manufacturers. The important choices to be made by the lime engineer are as to over-all length and diameter; length and diameter of enlarged section; firing means; extent and kind of heat economizing; and the preparation and handling of feed and products.

Short kiln *vs.* long kiln. A short kiln must be run at a relatively high temperature throughout in order to burn completely in the relatively short time that it affords. It follows that the feed must be of very short range in order to prevent over- and underburning; that it must be relatively fine because of the high temperature gradient from lime surface to reacting surface that is necessary to finish large pieces in a short time; and it must be of high purity, because low-purity feed slags excessively under high temperatures. The requisite high flame temperatures demand excess of fuel, and high exit-gas temperatures follow. If CO_2 is to be recovered, concentration is low because of incomplete combustion. Unless economizers are installed, the saving in first cost of kiln is largely consumed.

A long kiln COSTS installed about $400 per ft. of length (1938) as against about $350 for a short kiln (Cliffe, *33 #12 PQ 43*). Daily kiln CAPACITY of short kilns ranges from 0.3 to 0.9 tons of lime per ft. of length for 5- to 8-ft. kilns, depending upon the diameter, and varies roughly as the square of the diameter for kilns of the same length; long kilns produce up to 1.0 ton per ft. of length. FUEL CONSUMPTION, according to Cliffe, averages about 9,300,000 B.t.u. per ton of lime (with producer gas) for the short kiln *vs.* 8,000,000 B.t.u. in the long kiln, but he reports consumption as low as 320 lb. of coal per ton of lime (±4,200,000 B.t.u. per ton); and a long kiln burning shell and recovering CO_2 is reported (*PC*) to require only 2,400,000 B.t.u. per ton with powdered-coal firing and fuel economizing. Cliffe estimates MAINTENANCE, primarily liner repair and renewal, as 15¢ and 30¢ per ton respectively, the higher cost of the long kiln being due to the more difficult handling. Operating labor is cheaper on the large units, since it depends rather on the number of kilns than upon the tonnage running.

Table 14. Progress of reaction in a 360-ft. kiln *a*

Ft.	Percentages			Ft.	Percentages		
	$CaCO_3$	CaO			$CaCO_3$	CaO	
		Active	Inactive			Active	Inactive
10	96.3	.....	.....	190	90.6	3.65	0.18
20	96.3	0.03	.....	200	94.2	2.58	0.11
30	97.0	0.03	.....	210	94.2	1.77	0.09
40	97.8	0.03	.....	220	87.0	7.99	0.36
50	96.3	0.03	.....	230	87.0	8.33	0.40
60	96.3	0.36	.....	240	82.1	10.09	0.50
70	97.8	0.06	.....	250	79.2	10.94	0.52
80	95.6	0.53	0.05	260	76.1	13.80	0.63
90	95.6	0.39	0.04	270	72.8	17.72	0.75
100	92.8	0.79	0.06	280	69.2	20.81	0.84
110	94.2	1.29	0.08	290	65.4	25.11	1.16
120	94.9	0.56	0.05	300	61.0	32.60	1.55
130	94.2	1.71	0.09	310	55.0	40.11	1.94
140	92.8	1.85	0.10	320	46.4	47.67	2.35
150	94.9	0.98	0.07	330	17.8	75.43	3.26
160	93.9	1.96	0.11	340	8.6	83.70	3.50
170	92.8	4.01	0.20	350	3.3	88.61	4.66
180	94.2	1.54	0.07	360	1.2	90.57	4.29

a 0 to 305 ft., 6 ft. 9 in. I.D.
305 to 320 ft., 6 ft. 6 in. I.D.
320 to 350 ft., 11 ft. 6 in. I.D.
350 to 360 ft., 6 ft. 6 in. I.D.

Proponents of the long kiln claim as its advantages that fuel may be burned completely with little or no excess air because of the large combustion space and long time available; this is particularly important when CO_2 recovery is practiced. They also credit the kiln with better fuel economy, as above; lower flame temperatures due to more thorough preheat, and to more surface abrasion, which results in a thinner lime shell through which heat must be driven; less cleaning of feed; ability to handle coarser feed; little or no recarbonation; and a generally more rugged installation. Distribution of reaction in a long kiln, in so far as it can be deduced from samples taken during a short bring-down and after cooling, is shown in Table 14.

Coolers are usually of rotary or Unax type (Sec. 3*A*, Art. 4). Lime can be cooled to about 450° F. in the best types (*42 #8 RP 72*).

CO_2 recovery imposes the necessity for close operating control, if CO_2 concentration in the gas is to be kept at a maximum. The fuel must be completely burned and there must be a minimum of excess air. This requires uniform feeding (and in shaft kilns, uniform withdrawal of lime); close proportioning of fuel to the duty, with regular feed of fuel and the requisite minimum quantity of air for complete combustion; thorough admixture of air with fuel in the hot zone; and gas tightness throughout. Additionally there should be provision for maximum heat exchange between raw feed and exit gas, and between entering air and discharging lime, since both make for high fuel efficiency and consequent reduced ratio of N to CO_2 in exit gases. Insulation, despite its bad effect on the lining, is important from the same standpoint.

Burning of shell is economically impossible in present-day shaft kilns. On the other hand, the low ratio of thickness to length and width favors the short time-factor of the rotary, and the shape of

whole shell (and roughness of oystershell) makes for high repose angles and minimum segregation. Crushing and thorough washing are necessary when short kilns are used.

Thermal efficiency of a kiln. Azbe (*46 #5 RP 62*) presents Fig. 44 as a method of picturizing the distribution of heat consumption in a kiln, and therefrom a concept of efficiency. Loss by reason of the latent heat of water formed by combustion of hydrogen in the fuel is relatively high in gaseous fuels, low in coke, and intermediate with oil. This heat never plays any part in the kiln functions and is, therefore, pictured as leaving the heat stream before this enters the kiln. For the same reason heat in unburned solid fuel, or that which leaves the kiln in CO, is branched off outside. The two main branches of the pictured stream within the kiln represent heat at an intensity too low to effect calcination (upward) and heat at (or above) calcination temperature. The low-intensity heat in part is utilized in supplying sensible heat to the stone and in part is lost in the stack gases and by radiation from the preheat section. The sensible heat imparted to the stone is, after decomposition, in the decomposition products. That in the CO_2 is returned completely into the heat stream as a part of the gas stream when dissociation occurs in the burning zone. That in the lime is returned or not according to the extent of recuperation in the kiln or cooler. The high-intensity heat goes largely into driving the dissociation reaction. A part goes into the sensible heat of the lime, which has had to be heated above normal dissociation temperature in order to drive heat to the cores. A more or less small part escapes to the preheat zone, according to the type of kiln and the way it is operated. A part is lost as radiation from the burning zone.

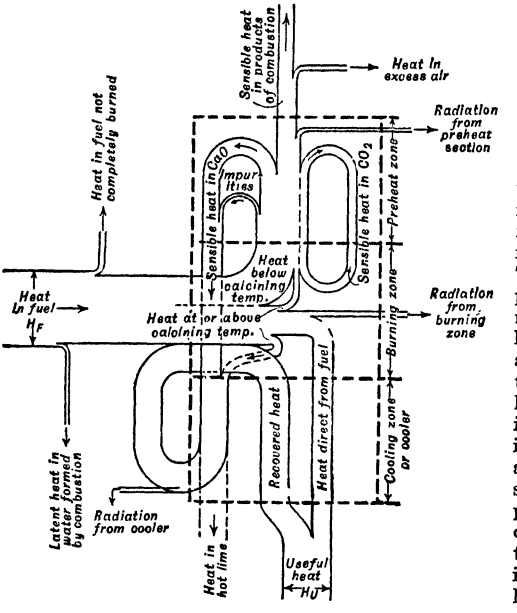

FIG. 44. Efficiency of a lime kiln (*after Azbe*).

Thermal efficiency is variously estimated. The PRACTICAL METHOD is to estimate the quantities of heat required to bring the stone to calcination temperature and to effect the calcination, then divide this by the quantity of heat in the fuel used, *i.e.*, $E = H_U/H_F$. The resulting figures are low—around 50% for average lime : fuel ratios. The KILN SALESMAN'S METHOD is to deduct from the theoretical heat input one or more of the quantities: heat in stack gas, heat gained in calorimetry of the coal by condensation of the water formed by combustion, a minimum radiation loss for an insulated shell (say 5 or 6%), and the heat content of a well-cooled lime; then, calling difference the useful heat input, calculate an efficiency of the order of 75 to 85% (*42 #12 RP 44*).

Fuel requirement may be estimated either from averages of fuel : lime ratios from practice, or by estimating net theoretical fuel demands and applying an efficiency factor. Meade (*loc. cit.*) states that the fuel : lime ratio for a shaft kiln burning a good slack coal is 1 : 2.5 to 4; that for a rotary, producer-gas fired, the ratio is from 1 : 2.5 or 3.5; that the consumption of pulverized coal in a rotary is 20 to 30% less than this; and that fuel requirements are about equal for oil or gas firing. Required heat is the sum of (*a*) that necessary to raise the stone from atmospheric temperature to dissociation temperature (see Fig. 35; sp. ht., Fig. 45); (*b*) the heat of dissociation at this temperature (−38,900 cal. per mol); (*c*) the heat required to raise the

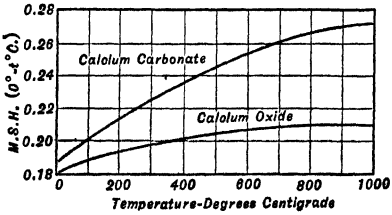

FIG. 45. Mean specific heats of calcium carbonate and calcium oxide (*after Knibbs*).

temperature of the lime from dissociation temperature to some temperature between this and the burning-zone gas temperature (Fig. 45); (*d*) the sensible heat of the water in the feed from atmospheric temperature to boiling point (sp. ht. = 1.0); (*e*) the latent heat of evaporation (966 B.t.u. per lb.); (*f*) the superheat of water to the exit-gas temperature; (*g*) add an allowance for radiation loss (5 to 25%). Deduct from this total (*h*) the heat recovered in cooling the CO_2 evolved from dissociation temperature to exit-gas temperature (sp. ht. = 0.23); and (*i*) the heat returned in cooling the produced lime, when this is done recuperatively. The difference is the total heat required under ideal conditions per unit of weight chosen. Add about 10% for leakage and unavoidable variation in operation. To determine fuel requirement, divide by the thermal efficiency decimal chosen.

Cost (1927) of plant is given by Meade (*loc. cit.*) as $1,250 to $2,000 per daily ton of lime capacity for a rotary plant, including crushing and limit sizing only, kiln, cooler, drives, and enclosure; corresponding figures for a furnace-fired shaft-kiln plant is given as $1,000 to $1,500 per ton. **Power** required in a rotary plant fired by pulverized coal is estimated by Meade (*23 CME 932*) as 16.5 hp-hr. per ton of lime, and the cost (1920) as $3.25 to $5.40 per ton. Mechanical advances since then, with corresponding decrease in labor requirements, more than kept up with the rise in labor costs up to 1939.

Gulf Crushing Co., Fig. 46.

Location: Morgan City, La.

Products: Rough washed shell for roads, etc.; washed sized shell for chicken grits, etc.; agricultural limestone. See Table 15 for analysis of shell products.

Table 15. Analyses of rough- and clean-washed shell at Gulf Crushing Co.

Item	Percentages	
	Rough-washed	Crushed and clean-washed
SiO_2	2.2 to 4.5	0.050
Fe_2O_3	0.17 to 0.27	0.020
Al_2O_3	0.11 to 0.28	0.010
$CaCO_3$	91.9 to 95.0	98.20
$CaSO_4$	0.43 to 0.51	0.35
$MgCO_3$	0.89 to 1.44	1.21

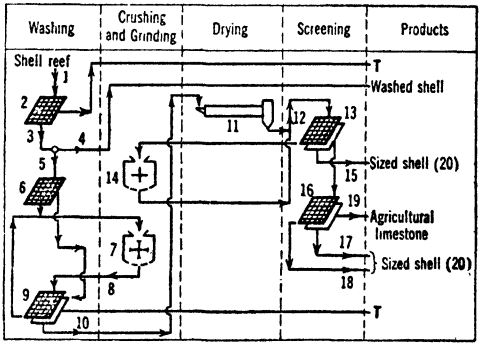

Legend for Fig. 46:

1. Suction dredge, 24-in. cutter head, 9 to 10 r.p.m., 15-in. Morris pump.

2. 1 @ 9×18-ft. wash trommel, 9-in. shaft, 4-in. fishtail spray, plate with 1 1/2-in. apertures on center spider with 12-in. annulus free, 13 r.p.m., 5/16-in. sq.-m. cloth.

3. 1 @ 24-in. boom conveyor; barge, 25 mi.; derrick clamshell at dock; 1 @ 14 (sq.) × 14-ft. pyramidal hopper with 2 rotary feeders.

4. 1 @ 18-in. belt conveyor; R.R. cars or trucks.

5. 1 @ 18-in. belt conveyor.

6. 1 @ 3×9-ft. wash trommel, 3/4-in. sq.-m. cloth, 23 r.p.m.

7. 2 hammer mills in parallel.

8. Bucket elevator.

9. 1 @ 3×18-ft. and 5×15-ft. 2-jacket wash trommel, 2 1/2- and 8-m. wire screen.

10. Belt conveyor; stockpile; clamshell bucket; hopper; bucket elevator; see Table 15 for analysis of crushed shell.

11. 1 @ 6×40-ft. oil-fired rotary drier.

12. Bucket elevator.

13. 1 @ 2-deck Hum-mer screen, 1/2-in. and 5-m. aperture.

14. Hammer mill.

15. Storage bin; mixing bin; bagging machine; R.R. cars.

16. Vibrating screen, 9- and 12-m. apertures.

17. As (15).

18. As (15).

19. By truck to Berwick; Raymond mill.

20. 32 t.p.h. combined total.

Fig. 46. Gulf Crushing Co.

Summary. One-stage rough screen washing at 1/4-in. for crude washed shell; followed by 2-stage screen washing with intervening crushing for release of interlaminar impurities for ultraclean shell; drying, sizing, and blending grit to specification; dry grinding of fines for agricultural lime.

25. MAGNESITE

Properties. Magnesite (also known as giobertite), $MgCO_3$, may be either compact and AMORPHOUS (cryptocrystalline), or coarsely crystalline. Breunnerite is crystalline magnesite containing more than about 5% isomorphously mixed $FeCO_3$. Hydromagnesite, $3MgCO_3 \cdot Mg(OH)_2 \cdot 3H_2O$, and brucite, $Mg(OH)_2$, are softer and not so heavy as compact magnesite. So-called magnesitic dolomite, produced in Canada, is a mixture of magnesite and dolomite. HARDNESS, 3.5 when pure; SP. GR., about 2.95 for compact, 3.05 for crystalline, and 3.15 for breunnerite. Lightly calcined magnesite (below about 2,730° F.) retains several per cent. CO_2 and absorbs more CO_2 and H_2O from air. Periclase (MgO) is a rare mineral but the name is given also to relatively pure dead-burned magnesite.

Uses. Recently 90% of domestic consumption is dead-burned magnesite for basic furnace linings, chiefly in the open-hearth steel furnace where it is used in grain form for bottoms, as well as in brick and other shapes. Dead-burned magnesite is also added to chrome refractories. Lightly calcined or caustic-calcined magnesite is used for Sorel or allied cements (with $MgCl_2$ or $MgSO_4$) for floors and stucco and in rubber manufacture. It is an important source of magnesium salts and medicinals, for which purpose a little crude magnesite is added. In sulphite pulp-and-paper making, formerly an extensive use, magnesite has been displaced by the cheaper dolomite, which also competes as a source of salts, CO_2, and refractories. Recently MgO made from seawater in California has competed with the mine product even in the cheapest dead-burned refractory grades. For detailed discussion see Seaton, *148 A 11.*

Occurrence. Amorphous magnesite usually occurs as veins or masses in serpentine; crystalline magnesite may occur in large lenticular masses or beds, often associated with dolomite.

Production. Until 1914, Austria-Hungary and Greece supplied the bulk of world production, which reached a maximum of 619,071 metric tons in 1913. Since 1933, total output has fluctuated from 1,000,000 to 1,500,000 tons with U.S.S.R. supplying over 30%, Austria (Germany) around 30%, Manchuria about 15%, and United States over 10%, while Greece, Czechoslovakia, and a group of 10 or 12 other countries each contributed about one-third of the remaining 15%. Domestic production in 1937 was 203,437 short tons, all from California and Washington. Sales comprised 1,952 tons crude, 10,031 tons caustic, and 83,204 tons dead-burned. Imports included 35 tons crude, 2,798 tons caustic, and 56,021 tons dead-burned. In addition there was a small output of brucite in Nevada which went into refractories. The first unit (capacity 15,000 to 25,000 tons annually) of a seawater plant came into production late in the year but no sales of synthetic magnesite were made until 1938.

Selling. Owing to high transportation cost, magnesite is usually calcined before shipment. Small sales of crude f.o.b. California mines have ranged since 1920 from $11 to $15 a short ton. Dead-burned magnesite delivered at Pittsburgh and nearby steel-making centers cost about $20 a ton in 1913, but owing to the tariff and other reasons has generally cost around $35 since 1922, averaging around $19 f.o.b. west-coast mines, although nominally quoted at $25 in 1937. High-grade periclase (94%) is quoted at $65 a ton. Caustic-calcined magnesite has been quoted recently (1941) at $40 for the 95% grade with specially selected varieties even higher, but average sales realization for all caustic-calcined magnesite f.o.b. California shipping points has averaged around $30 since 1929.

Treatment. Careful cobbing and sorting are necessary at most mines. Frequently 2 tons are rejected out of 3 tons mined, yet mechanical concentration was not attempted commercially until 1940. Froth flotation is feasible for some ores (Sec. 12, Art. 52) and sink-float for others (Sec. 11, Table 94).

Bald Eagle mine, Fig. 47 (*148 A 37*).

Location: Near Ingomar, Calif.

Ore: Claylike amorphous magnesite as boulders, nodules, and masses in serpentine breccia. Silica, the principal impurity in the magnesite aggregates, occurs in the surface of nodules and in cracks and crevices.

Labor: 3 or 4 men on day shift, 1 on each other shift at BALD EAGLE; 1 man per shift at INGOMAR.

Legend for Fig. 47:

1. By car and aerial tram.
2. Flat grizzly over bin. Hand sorting.
3. 200-ton compartmented bin for ores from different parts of mine; provision for blending discharges.
4. 1 @ 10×20-in. jaw crusher, 2 1/2-in. open setting.
5. Chain-bucket elevator.
6. 1 @ 3×6-ft. 2-deck Symons screen, 3/4-in. and 1/2-in. apertures.
7. Symons cone crusher, 1/2-in. set.
8. Bucket elevator.
9. Symons screen, 1/2-in. aperture.
10. Swinging chutes; automatic samplers to separate small sample bins corresponding to (11).
11. 7-compartment 2,000-ton raw-rock storage.
12. 3 Hardinge constant-weight feeders, electrically interlocked against feed failures; gathering conveyor.
13. 60-ton kiln-feed bin; reciprocating feeder.
14. Bucket elevator.
15. Alternative when kiln feeds down to <10 m. are wanted.

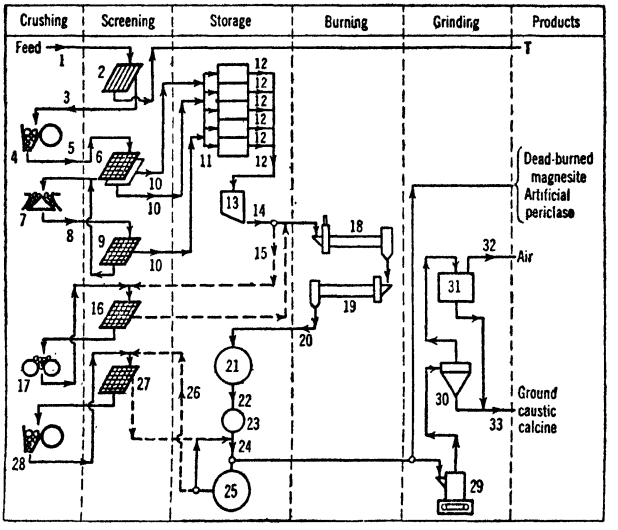

Legend for Fig. 47—Continued:

16. Vibrating screen.
17. Rolls.
18. 1 @ 6(ID) × 100-ft. kiln; lining 9 in. thick, 50 ft. of periclase brick, 50 ft. of fire brick; oil firing, manual operation; temperature 2,190° to 3,180° F. according to product being made. A smaller kiln, 2 1/2 × 20-ft., lined with 4 1/2-in. firebrick, is available for special burns.
19. 1 @ 4 × 40 ft. rotary cooler, lined with firebrick for 15 ft., steel lifters through balance; enlarged section 5 ft. diameter for 18 in. at discharge end, made of 3/4-in. punched plate (2-in. rd. holes) lined with 3/8-in. punched plate with 3/4-in. holes, containing 2 @ 12-in. steel balls (250 lb. ea.) which break clinker through the 3/4-in. holes.
20. Screw conveyor; bucket elevator; automatic sampler; belt conveyor.
21. 6 steel storage silos, 6,750 cu. ft. ea. = 200 tons calcine or 425 tons periclase.
22. 20 mi. by truck to Ingomar.
23. 10-ton steel receiving hopper.
24. Peck carrier to (25) or to car-loading chutes or
25. 5 steel silos, 150 tons calcine or 250 tons periclase each.
26. Alternative.
27. Vibrating screen.
28. Small crusher.
29. 1 @ 5-roll high-side Raymond mill, capacity, 2 t.p.h. to 95% <200-m.
30. Cyclone.
31. Dust filter.
32. Fan.
33. 3 @ 60-ton silos; packing machines.

FIG. 47. BALD EAGLE MINE.

Summary. Selective mining followed by hand sorting; crushing to <3/4-in.; sizing to 3 grades <3/4-in.; blending and burning to dead-burned magnesia or periclase in rotary kilns; crushing and/or grinding products.

Sea water is a source of magnesia and may, under special circumstances, compete successfully with magnesite or dolomite, despite that the MgO content of typical sea water is about 0.2% (Seaton, *148 A 20*). Recovery depends upon the fact that $Mg(OH)_2$ is very slightly soluble in water while $Ca(OH)_2$ is substantially soluble, wherefore admixture of slaked lime with sea water precipitates $Mg(OH)_2$. The practical essence of the problem comprises (Chesny, *28 IEC 383*) means to insure ready sedimentation and filtration of the gelatinous precipitate of $Mg(OH)_2$, and sufficient prepurification of the sea water and of the lime to insure a precipitate of required purity. A specially favorable case occurs at WESTVACO CHLORINE PRODUCTS CORP., Newark, Calif. (*30 #11 PQ 42*), where the bittern residue from evaporation to produce sodium chloride from sea water contains 10 to 14% of magnesium salts. An outline of the process is shown in Fig. 48. Details of the chemical apparatus and procedure are of primary importance, and should be investigated thoroughly before embarking on what looks like a simple operation with an inexhaustible supply of crude. The plant has competed successfully with magnesite mines as a source of magnesium compounds but has had especially favorable geographical advantages.

Westvaco Chlorine Products Corp., Fig. 48 (*30 # 11 PQ 42*).

Location: Newark, Calif.
Crudes: Magnesium bitterns and shell.
Products: Magnesia products; gypsum; $CaCl_2$.

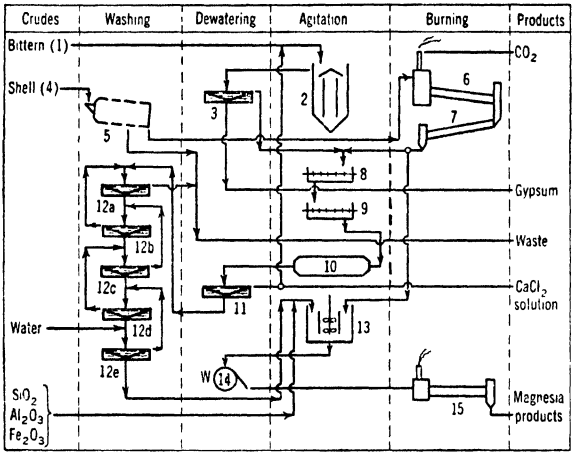

Legend for Fig. 48:

1. Concentrated brine after precipitation of NaCl.
2. 3 Pachuca tanks, used in sequence; while one is filling, a second is agitating and a third cleaning.
3. 2 gypsum thickeners.
4. Dredged from bay with fine sand, clay, and silt.
5. Wash trommel on dredge; washed shell contains about 0.1% clay.
6. Rotary kiln; high-temperature burn possible on account of low silica content of washed shell.
7. Rotary cooler.
8. 1 double-paddle horizontal slaker.
9. 1 single-paddle horizontal slaker.
10. 1 @ 10×36-ft. drum slaker.
11. Thickener to separate $Mg(OH)_2$ sludge from dissolved salts, mostly $CaCl_2$.
12. Countercurrent decantation washing with fresh water, discharging washed $Mg(OH)_2$ from (12*e*).
13. 3 Dorr-type agitators used in sequence for filling, agitation, and settlement and decantation of mixes with silica, clay, and iron oxide for burning slurries.
14. Filter.
15. 1 @ 11- and 7×190-ft. rotary kiln.

FIG. 48. WESTVACO CHLORINE PRODUCTS CORP.

Summary. Bittern freed of $SO_4^=$ by $CaCl_2$; $Mg(OH)_2$ precipitated by $Ca(OH)_2$ slurry, washed, and burned to $MgO \pm Al_2O_3$, SiO_2, Fe_2O_3, etc.

26. MEERSCHAUM

Properties. Meerschaum or sepiolite ($Mg_2Si_3O_8 \cdot 2H_2O$) occurs in compact claylike masses, highly absorbent, generally white, and with uneven fracture. HARDNESS about 2 1/2, SP. GR. about 1.2 (higher if impure), but may float on water when dry. Owing to high absorption it develops a rich color in tobacco pipes.

Uses. Although meerschaum is reported to have been employed as a light-weight building material, as a soap substitute, and also as a remedy for stomach ulcers, it is used almost exclusively in smokers' articles.

Occurrence. Meerschaum occurs at Eskishchir, Bursa Province, Turkey, as nodular lumps, associated with magnesite in residual clays derived from serpentine. Also found in New Mexico as nodules and bedded masses in limestone.

Production. World output, virtually all from Turkey, may have exceeded 10,000 boxes, weighing 30 to 35 kg. each, in 1869, but probably averaged only 7,000 a year in 1914 when war paralyzed the industry of carving pipe bowls and cigar holders, long centered principally in Germany and Austria. Subsequent output has been much smaller. Imports into the United States were worth $102,803 in 1914 but only $2,077 (508 lb.) in 1934 subsequently rising to $12,681 (3,687 lb.) in 1937.

Selling. Market quotations apply to standard-sized cases, but number of pieces per case may range from only 35 to several thousand, according to how large they are. As long as the material is large enough to make pipe bowls, variation in size is not so important as in quality, and for each of the several size groups there are as many as seven grades, ranging in price from $155 to $335 a case. Small pieces sell as low as $30 a case. It would be impossible to translate these quotations to a weight basis, but average foreign market values declared on imports into the United States have ranged in late years from a minimum of $1.36 a pound in 1924 to a maximum of $4.09 in 1934.

Treatment. In Turkey preliminary treatment of hand-sorted meerschaum is confined to removing adhering dirt, drying carefully, and rough polishing. Before carving, it is generally soaked in wax.

At Sapillo Creek, N. Mex., wet tabling produced clean separation from gangue (*99 J 941*) but the concentrate was virtually unsalable, although artificial meerschaum may be made from chips and dust compressed into blocks.

27. MICA

Properties. Muscovite and phlogopite are the micas of commerce. Biotite (black mica) and other varieties (except lithium and vanadium micas) are virtually unsalable. Vermiculite (*q.v.*), an altered mica, preferably should not be classed commercially as mica. Muscovite $H_2KAl_3(SiO_4)_3$ is commonly called WHITE MICA to differentiate it from AMBER MICA, which is phlogopite, $(H,K,Mg,F)_3Mg_3Al(SiO_4)_3$, but except in thin films muscovite is usually greenish, brown, or reddish; RUBY MICA is the best quality of Indian (Madras) muscovite. Muscovite occurs usually in six-sided plates or BOOKS having a perfect basal cleavage. HARDNESS, 2 to 2 1/2; SP. GR. about 2.8. Phlogopite is a trifle heavier, possibly a little softer, and definitely more resistant to heat. The most useful micas can be split, easily and accurately, into transparent films whose thinness is limited virtually only by the dexterity of the operator. Such films are not only impervious to fire, water, acid, or electricity, but also constant in volume under high heat or extreme cold. Mica is readily distinguished from other platy minerals by the flexibility of the sheets, which usually can be wrapped around a pencil without cracking.

Uses. The electrical industry is the principal consumer of sheet mica and splittings. Considerable quantities are used for stove windows, lantern chimneys, furnace peepholes, nonbreakable goggles, and sundry decorative uses. Ground mica is used mainly (80%) in roll roofing; substantial quantities are consumed in making wall paper, paint, and rubber goods; miscellaneous uses include surfacing asphalt shingles, Christmas-tree snow, lubricants, annealing, concrete surfacing, foundry facings, pipeline enamels, plastic specialties. Splittings are cemented into built-up mica, or mica board. ALSIFILM, made from bentonite, is the only promising substitute for electrical mica.

Occurrence. Muscovite is of widespread occurrence in granites and schists, but usually in small plates of no commercial value. Commercial sources are acid pegmatites. Plates 10 ft. across have been found in Indian mines but any sound crystals over about 1 1/2 in. in diameter may yield usable sheets. Biotite also may be found in granite pegmatites, often to the exclusion of muscovite. Phlogopite is restricted to basic pegmatites (pyroxenites), essentially quartz-free and frequently containing apatite, the occurrence being confined to areas underlain by basic batholiths.

Production. In 1937 the total production of uncut sheet, scrap, and by-product mica in the United States rose to 26,043 short tons valued at $639,981, compared with imports totaling 11,339 tons nominally valued at $2,067,599. These figures are misleading because the United States produces normally only 15 to 35% of its requirements of sheet mica larger than about 1 1/2 by 2 in. and only an insignificant part of its requirements of splittings. The bulk of the domestic output is scrap, ground mica schist, and by-product mica, although American mines also produce almost enough punch and circle mica for domestic needs. The principal importation is splittings, of which American manufacturing plants consumed 4,347,435 lb. valued at $1,257,645 in 1937. These films, ordinarily not more than 0.001 in. thick, cannot be produced by machinery and come mostly from British India; Madagascar and Canada (phlogopite) produce only small quantities. Domestic production of sheet mica in 1937 was 1,694,538 lb., but only 381,638 lb. were larger than punch or circle. Imports of sheet mica total less than 1,000,000 lb. yearly; they consist principally of larger sizes. British India ordinarily has supplied about 70% of the world's muscovite, but increasing quantities have come from South America and the U.S.S.R. Phlogopite has been produced commercially only in Canada and Madagascar; the latter also furnishes some muscovite.

Selling. The value of mica depends chiefly upon the size of flat sheets into which it can be split and also upon whether it is clear or stained. It may be marketed as (1) cut or uncut block, (2) sheet, (3) splittings, and (4) wet- or dry-ground mica. In the United States, mica that will not yield flat films over about 1 1/2 in. square, or that is ruled, rumpled, or flawed in any way can be sold only as scrap, its sole use being for making ground mica; in India crystals that will yield films even 1 in. square may be made into splittings. Only sizes that will yield rectangles 1 1/2 by 2 in. or larger can be classed as sheet quality; slightly smaller sizes are classed as punch. Much apparently good, large mica is ruined by rumpling or distortion. Tangle-sheet mica splits imperfectly; ruled mica splits into ribbons across the cleavage planes; and wedge mica splits into films that are thicker at one end than at the other. Spotted or stained mica contains thin scales or streaks of iron oxides or other minerals, and is worth less than clear, transparent mica, even though its usefulness may not be greatly impaired. Clay staining, usually occurring only near outcrops, may render the mica useless even for scrap; the presence of soil between the laminae shows that the books have been opened up slightly by weathering. Air-bells, too, may ruin mica for use as sheets, unless removable by careful splitting.

ASTM designation D351-33T describes six different qualities of muscovite for each size, ranging from CLEAR to BLACK STAINED OR SPOTTED, but the complexity of grading and classifying is indicated by the fact that there are fully 100 distinct products. Small mica miners can scarcely hope to know how to appraise their product and their appraisal would not be accepted by buyers. The product of any mine is mixed and contains many grades (sizes) and classes (qualities) in ever varying propor-

tions. Even if a universally accepted standard did exist with respect to certain grades and classes, there would still be room for wide difference in opinion as to the value of a mixed lot. Actual prices paid for specified sizes in 1937, as reported to the Bureau of Mines by producers, are shown in Table 16.

Table 16. Average value per pound of domestic uncut sheet mica in 1937

	Clear	Stained or spotted		Clear	Stained or spotted
Punch or washer..	$0.054	$0.049	3×4-in.....	$1.219	$1.032
Circle.....	0.104	0.119	3×5-in.....	1.905	1.247
1 1/2×2-in.....	0.277	0.209	4×6-in.....	2.841	1.344
2×2-in.....	0.541	0.368	6×8-in.....	4.427	1.162
2×3-in.....	0.766	0.461	8×10-in.....	8.097	2.500
3×3-in.....	1.086	0.791			

Generally speaking, Indian ruby mica, grade for grade and class for class, sells for higher prices than other kinds of foreign or domestic mica. Indian splittings bring all the way from about 10¢ to $1.20 a pound and waste or scrap mica is worth all the way from $6 to $20 a short ton, averaging in 1937 $14.08 per short ton, f.o.b. domestic mines. Dry-ground mica in that year sold for around $23 f.o.b. plant, or $30 a ton delivered at consuming points; wet-ground dropped for a time as low as $50 a ton, the lowest price in years. Owing to gradual lowering of the standards of quality, price comparisons over a period of years are virtually valueless. The long-time trend has been upward, with prices for small sizes advancing much more than those of larger sizes. Until 1919, about the only use for No. 6 mica (1 to 2 1/2 sq. in., the smallest size above punch) was for fuse plugs, but now it is used in much larger quantities than all other sizes combined. During the last 2 decades its price has risen almost fivefold, whereas for No. 5, the next larger size, the advance was a little over fourfold and for some of the largest sizes, scarcely double.

Treatment. Sheet mica is prepared by hand; fine mica by crushing, concentrating, and grinding concentrate. Hand preparation requires skilled labor, because the sheet is easily damaged in the process. The steps are, in order: (1) Cobbing and cleaning the crude masses (BOOKS) to remove all external nonmicaceous material; (2) RIFTING, *i.e.*, splitting into sheets that are thin enough to be TRIMMED or cut by hand, usually 0.01 to 0.04 in. thick; (3) trimming to rectangular sheets of the approximate dimensions shown in Table 16, the trimming being done with a sickle-shaped knife (Bengal SICKLE-TRIMMED) which produces beveled, irregular edges, or with a knife, guillotine, shears, or the thumb; (4) grading to size by comparison with a standard template; (5) classification into grades according to quality on the basis of inclusions, color, sheen, flexibility, etc.; (6) splitting with a thin-bladed knife to the desired final thickness to produce SHEET or BLOCK, which must be at least 0.01 in. thick; FILM ranging from 0.001 to 0.009 in. thick, and SPLITTINGS 0.001 in. thick or less. Only a few pounds of splittings can be made per day; cost depends, therefore, on the price of labor, and is estimated (*U. S. Tariff Comm., Rept. 130, Ser. 2*) at 3 or 5 to 15 or 20¢ per lb., according to the country of origin. (See also *IC 6822.*) Machine splitting of small phlogopite has been practiced, and many patents have been issued for machine splitting, but no such commercial operation is reported.

Grinding. Mica is one of the most difficult minerals to grind; even the thinnest flakes are tough, elastic, and too slippery to be grasped and torn by ordinary machines. Strong heating or excessive weathering renders mica easier to grind but ruins it for most uses. Wet-ground mica is worth several times as much as dry-ground, chiefly because of its sheen and general appearance. The edges of dry-ground mica are torn and hackly and even the faces of the flakes may be abraded so that it looks like flour and hence is too dull for decorative purposes, has little slip, and does not mix well with liquids.

Dry-grinding, Most modern plants use some type of hammer or attrition mill, usually a grate-type hammer mill with 1/4-in. or 1/2-in. openings, the discharge from which is sent to multiple-deck vibrating screens that produce the desired sizes. Standard sizes at several plants are 80-, 140-, and <140-m.; at other plants the sizing is on 60-, 80-, and 250-m. screens; some of the smaller plants grind through 20-m. and scalp into two sizes on 100-m.

Wet-grinding is usually accomplished in CHASER MILLS, resembling Chilean mills, except that the wheels and the bottom die ring are of wood. Modern chaser mills are 3(deep)×10-ft., of reinforced concrete with steel-plate wall lining and hardwood blocks set end grain up on the bottom. Wheels are 30 in. diameter, of several layers of hardwood plank, spiked together to a thickness of 20 to 24 in., mounted on a yoke slidable vertically on the drive spindle. They more or less float on the charge, which is turned over by following plows. SPEED is about 20 r.p.m. for a 10-ft. mill; POWER CONSUMPTION 20 hp. A batch is run about 8 hr. in a paste containing about 45% water; temperature must be kept down to prevent burning (loss of sheen). Ground material is sluiced to a shallow settling box (through rough-settling troughs if much sand is present); fines are overflowed to settling tanks (or pressure filters) and coarse settlings shoveled back to the chaser mill. Settlings from fine tanks are dried, reground dry, and bolted through 160-m. silk or 120-m. bronze cloth. At one plant the fine settlings are boiled with live-steam coils for about 20 min., scum is skimmed after standing, the tank is again boiled, allowed to stand 2 hr., and again skimmed; after 30 min. further standing, water is siphoned off, and steam turned into the coils for about 12 hr., when the coils are withdrawn with adhering mica

and stripped over a screw conveyor leading to the bolting screens. Cost of grinding and screening, wet or dry, to fine meshes (*e.g.*, 160 silk) is about $25 per ton. For further detail see *148 A 105*.

Best practice calls for feeding only clean scrap to grinding plants, but sand and some clay can be removed before drying by proper classifying and settling. Micronized mica (1,000- or 3,000-m. limiting) is produced in jet impact machines (Sec. 6, Art. 2).

By-product mica is recovered at clay washers (see Art. 9).

At VICTOR MICA CO. near Spruce Pine (*44 #9 RP 48*), initial recovery of mica is made from sluiced mine rock by rejecting >1-in. by screening, roll grinding the balance through 1/8-in. screen, making a rough mica concentrate on Harz jigs, drying, making a suction-screen separation at 8-m. and 14-m. and air-table separation on 8~14-m. and <14-m. sizes.

28. MINERAL PIGMENTS

Properties. The first requirement of any pigment is pleasing, uniform color, although fine grain size and low oil consumption are likewise important. For linoleum and oilcloth fillers, price is perhaps the chief consideration, due weight being given to ultimate economy in respect of oil consumption as well as cost per ton. For a given type of pigment, the relative value is based upon brightness or intensity of color, and its STRENGTH or staining qualities. Many colored rocks, if used alone, might be suitable for mortar or even wall colors, but commercial pigments must be able to retain their color (CHROMA) after dilution with 10 or usually 20 or more parts by weight of ZnO. Paint pigments are mostly under 1-μ in size. Although ASTM specifications limit the >325-m. content of red and brown iron oxides to 3%, and of ochers to 1%, the bulk density of powdered natural pigments usually ranges from 0.02 to 0.04 gal. per lb., and linseed-oil absorption from 14% for fairly coarsely ground colors to 80% or more for semicolloidal precipitated colors; for American ochers the range is from 35 to slightly over 50%.

The most important earthy colors are the iron compounds, yellow ochers, siennas and red oxides; umbers; and blacks. OCHER is the yellow-to-brown form of limonite mixed with clay; it should contain not less than 17% Fe_2O_3. SIENNA (first found in Siena, Italy) is often described as more of a stain than a pigment; with lower Fe content it grades into ocher and with increasing MnO_2 content, into umber. On dilution ordinary brown-black limonite shows new hues: yellow, green, or gray. RAW UMBERS contain 11 to 23% MnO_2 and 25 to 47% Fe_2O_3; they are greenish to very dark brown and grade into manganese blacks. Powdered coal, manganese ores, graphite, and asphaltum are used as black pigments, especially graphite. MINERAL BLACKS and SLATE BLACKS are carbonaceous shales; often low in tinctorial power; they may be toned up with carbon blacks. TRUE BLACKS, those which on dilution reduce to neutral gray, are made principally from some form of carbon, with or without black iron oxide (magnetite or mill scale). The true carbon blacks are: SOOT BLACKS (carbon black, lampblack, gas black), ANIMAL BLACKS (ivory black, drop black, bone black), and CHARCOAL BLACKS. Fe_3O_4 has a black-bluish tint and is favored in certain composition products because of its high density; it is also used to some extent in paints and as an abrasive. RED OXIDES include strongly tinted ground hematites; DOMESTIC REDS (used chiefly as base pigments to which other red pigments are added) may contain 10 to 60% Fe_2O_3 but PERSIAN or INDIA RED contains 65 to 72% and SPANISH REDS contain up to 90%. VENETIAN REDS, though originally imported from Italy, are now made artificially and are diluted with $CaSO_4$. Natural red clays and earths of various kinds have been used as pigment, but most of the better colors are produced by roasting or synthetically. Green earths (TERRE VERTE, VERONA GREEN, etc.) are chiefly ferromagnesian silicates, rich in chlorite, and are used for cheap lakes or bases for artificial chrome and zinc greens.

Uses. Pigments are employed to give color, opacity, or body to paint, stucco, plaster, mortar, cement, linoleum, oilcloth, rubber, and sundry plastic materials. The borderline between pigments and fillers or extenders is not always clear; however, uncolored clays, barite, whiting, etc., are not usually classed as pigments; probably because they have so much less opacity or HIDING POWER than the manufactured white pigments such as white lead, zinc oxide, lithopone, or titanium whites.

Occurrence. Limonite and ochery earth pigments are found chiefly as replacement or precipitation deposits in fractured zones of quartzites or limestones but occur also in clay and other unconsolidated deposits. Iron oxides are universally distributed and some of the deposits are iron ores or marginal ores.

Production. In the absence of actual statistics for recent years, the annual production of natural pigments in the United States may be roughly estimated as around 50,000 tons worth $2,500,000. Formerly it was much higher in good years, but although the demand for pigments has grown considerably, synthetic pigments have displaced natural pigments to a large extent in the paint and varnish industry. In 1929 the value of the domestic production of all kinds of dry colors and pigments reached a peak of $116,752,604. Substantial quantities of ocher are mined in Georgia for export as well as domestic consumption, and various pigments are produced in Pennsylvania, Virginia, and several other states in fairly substantial amounts. France is the world's largest producer of ocher; Turkey (Cyprus) of umber; and Italy of sienna. These countries as well as Germany, Netherlands, and Great Britain also produce other pigments in fairly large quantities. Spanish, North African, and Persian (Indian) iron ores are the outstanding natural red pigments, and there is more or less local production of earthy pigments in almost every country.

Selling. Lack of accurate color and hue standards has handicapped miners in finding markets. Most paint makers are unwilling to experiment with new materials. Since long-established reputation is so important, most of the business is in the hands of a few large producers, several of whom are consumers also. Smaller producers generally find it easier to market their products through dealers or jobbers. Prices for most natural pigments declined sharply after about 1925 but remained fairly steady at the new lower levels after 1935. American yellow ochers are graded in quality from A to H, worth (1938) 2 1/2 to 1 3/8¢ per lb., respectively, the browner shades being cheaper. American golden ocher ranged from 6 1/2 to 3¢ per lb. for A to C grades. French yellow ochers are mostly around 3¢ per lb. Umbers run higher as do most of the imported red oxides. Italian raw sienna was priced at 12¢ per lb. compared with 4¢ for domestic.

Treatment. The soft, claylike pigments are treated by comparatively simple washing processes such as are used for clay (*e.g.*, rake classifiers, settling tanks, and filters). Shales and cheaper grades of ocher are dry-ground in hammer mills, which may be equipped with throwout devices or may operate in circuit with air separators for removing sand and other hard impurities before they are pulverized and enter the product. Ball mills and various pulverizers are used for the harder materials; for the softer materials roller mills seem to be indicated. Buhr mills, once universal, have been largely abandoned. Wet-ground materials are sized by levigation and dry-ground materials by air separation; formerly everything went through bolting cloth. Steam-heated drum-type driers are preferred for wet-ground ocher; at a Georgia mill thickener underflow is spattered on a 4×10-ft. drum, the spattering device being a 3-in. shaft studded with 3-in. bolts and rotated in the pulp at 200 r.p.m. Other types of driers may darken the product by tending to allow portions of it to be heated too long. For making burnt ochers, red metallic paints, etc., the raw materials are calcined in vertical shaft kilns, rotary furnaces, platform calciners, or floor kilns. All pigments may be toned up by adding aniline dyes or artificial pigments.

29. NITRATES

Properties. Aside from inconsequential amounts of true saltpeter (KNO_3), chiefly as efflorescences in soil and occasional accumulations in caves, the only natural commercial nitrate is CHILE SALTPETER ($NaNO_3$). The crude (CALICHE) is a mixture of clay, sand, stone and a cement of more or less soluble salts ranging in composition from 5 to 30% each of nitrate, chloride, and sulphate of sodium, with minor percentages (0.1 to 5%) of K, Mg, and Ca, chiefly in the slightly soluble double sulphates bloedite ($Na_2SO_4 \cdot MgSO_4 \cdot 4H_2O$), glauberite ($Na_2SO_4 \cdot CaSO_4$), or polyhalite ($K_2SO_4 \cdot MgSO_4 \cdot 2CaSO_4 \cdot 2H_2O$). Darapskite ($NaNO_3 \cdot Na_2SO_4 \cdot H_2O$) comprises 30% of some deposits; it is relatively insoluble in cold water but breaks down and dissolves at about 130° F. Small amounts of potassium perchlorate, sodium iodate, and some borates are also present. The water-soluble salts comprise 20 to 80% of the caliche. Color ranges from pure white to browns and reds, occasionally yellow, black, or even blue. Nitratine ($NaNO_3$) is highly soluble in water; HARDNESS is about 1 1/2; SP. GR. about 2.2.

Uses. The principal use of sodium nitrate is in fertilizers. Prior to 1914 Chilean nitrate had a monopoly of the world's fertilizer market except for the relatively small output of ammonium sulphate from by-product coke ovens, gas works, etc. As recently as 1920 it was the major source of nitrogen for the manufacture of nitric acid and it is still used as a direct ingredient of explosives. Minor uses are as a flux in metallurgy, in glass making, for curing meat, and to a very minor extent in medicinals. With the commercial development of processes for synthetic ammonia and nitric acid, natural sodium nitrate was rapidly supplanted by the air as a source of industrial nitrogen, and in the fertilizer field it meets competition not only from ammonium sulphate (largely from coal) but from synthetic sodium nitrate and other products resulting from the fixation of air nitrogen, *e.g.*, nitrogen oxides, cyanides, cyanamide, and ammonia. Synthetic nitrates are now made chiefly from ammonia, the necessary H (hydrogen) being furnished as producer gas generated from coal. Some of the minor elements present as impurities in Chilean nitrate are claimed to enhance its value as fertilizer.

Occurrence. The Chilean nitrate fields are in an arid mountain trough paralleling the coast along the lower western slopes of the Andes. The deposits are spotted in an irregular belt 5 to 40 miles wide and about 400 miles long. The workable caliche beds range in thickness from about 1 to 14 ft.; most lie within 1 to 4 ft. of the surface, but overburden may be as much as 25 ft. Similar but noncommercial deposits have been found in Africa, western Mexico, southern Peru, and southwestern United States. Cave deposits, located in the Southern States, were used for making gunpowder in early days. Nitrates of potash and/or soda are often found in the playas or dry lakes in the desert regions in the Southwest, particularly in California and Nevada, but have never been worked profitably.

Production. World output of nitrogen was 300,000 metric tons in 1900, 2,000,000 tons in 1929, and rose to more than 2,500,000 tons in 1937. Since 1931, Chilean nitrate has contributed only about 10% of the total, compared with more than 60% in 1900 and 20 to 35% during the early 20's. In 1928–29 exports of Chilean nitrate were about 3,000,000 metric tons, exceeding all previous records, but prices were relatively low.

Selling. Prices in 1914–18 were $60 to $75 per short ton; thereafter stabilization at $45 per ton f.a.s. Chile was attempted unsuccessfully and by 1934 the price was $18.80. By agreement with the

World Nitrogen Cartel the price of 92% crude nitrate f.o.b. New York City, carloads, was advanced progressively from $24.80 in 1935 to $28.30 during the latter part of 1936 and thereafter.

Specifications for Chilean nitrate are 95.5% $NaNO_3$ min., 2% max. moisture, 1.5% NaCl, 0.75% KCl, and 0.5% borax. It contains 15.5 to 16.2% N. SHANKS-PLANT PRODUCT generally carries about 1.15% KNO_3, 0.7% $Mg(NO_3)_2$, and 0.13% $Ca(NO_3)_2$. Formerly a 91–95% grade for fertilizer use and a 96–97% technical grade for making nitric acid and other industrial uses were offered. GUGGENHEIM-PROCESS NITRATE runs over 98.5% $NaNO_3$; it is in pellets 1/32- to 1/8-in. diameter.

Shipments are made all over the world, leading consumers being the same as for other fertilizer materials. Roughly one-third of the nitrogen needs of the United States is imported in the form of Chilean nitrate.

Treatment. About two-thirds of Chilean nitrate-plant capacity utilizes the old Shanks process and one-third the newer (1927) Guggenheim process. Recovery by the SHANKS PROCESS is approximately 65%; fuel and labor, comprising about 40% each of total cost, are wastefully employed; hence only the richest deposits (>12% $NaNO_3$) can be worked profitably under existing conditions. The GUGGENHEIM PROCESS recovers 85 to 90%; it adapts to nitrate recovery the methods previously employed at CHILE COPPER CO. (Chuquicamata) for soluble copper. By mechanical mining and handling and improvements in leaching and crystallizing technique, it can work caliche containing as little as 8% $NaNO_3$. Output of nitrate per man-year is 167 tons compared with 60 to 70 by Shanks process; output per ton of fuel is 25 to 30 tons compared with 6 to 7; costs are nearly halved.

Both processes utilize the fact that the solubility of $NaNO_3$ increases with rise of temperature, whereas that of NaCl remains substantially constant. The Shanks process leaches with boiling solution (280° F.), which is thereafter cooled to normal temperature (about 50° F.); the Guggenheim process uses warm solution (104° F.) for leaching and then refrigerates it to about 40° F., utilizing heat exchange on the cooling system and power plant for much of the heat input. (See Fig. 49.)

By-products of the nitrate plants include iodine and potassium nitrate, which build up in and are recovered from the mother liquor, and sodium sulphate, which is recovered from the caliche residue from nitrate extraction by leaching with water at 65° F.

Shanks process, used at small plants, leaches <2 1/2-in. jaw-crusher product with boiling mother liquor containing 450 gm. nitrate per li. to pick up about 250 gm. per li. more in 12 to 15 hr.; slimes are then settled out from the hot liquor, and it is run into crystallizing tanks to cool for about 8 days and to deposit the nitrate pick-up. Tailing carries 3 to 8% $NaNO_3$ and crude must contain at least 13% $NaNO_3$ for profitable operation.

Anglo-Chilean Consolidated Nitrate Corp., Fig. 49 (*23 IEC 460; IMR 536; 143 # 5 J 50*).

Location: Pedro de Valdivia, Chile.
Capacity: 600,000 tons saltpeter per yr.; 29,000 tons crude per day.
Crude: About 8% $NaNO_3$.
Products: Saltpeter, 98.8% $NaNO_3$; iodine; sodium sulphate; tailing, 1.1 to 1.6% $NaNO_3$.

Legend for Fig. 49:

1. Electric shovels; electric train of 30- to 35-ton cars; car dumpers.

2. Grizzly, 7-in. aperture.

3. 2 @ 60-in. Superior McCully gyratories.

4. 4 @ 7-ft. standard cone crushers.

5. 4 @ 7-ft. short-head cone crushers; product <5/8-in., about 10% >1/2-in.

6. Vibrating screens, 20-m. aperture; undersize is about 20% of total.

7. Screw mixer; 1.8 density, 60° C.

8. Moore filters; *a* = cake-making period, 1- to 1 1/2-in. cake; *b* = washing period; final cake contains 3 to 4% $NaNO_3$.

9. 1 of 10 @ 7,500-ton leaching vats in parallel, served by mechanical loading and unloading bridges. The 10 vats proceed from charged to empty according to the cycle shown, as follows: Tepid mother liquor run into (9) to fill interstices and circulating piping.

10. 1 as (9), one stage further advanced; the charge of leach solution is circulated through heat exchanger (20) against Diesel-engine exhaust gas until temperature reaches about 40° C.; solution gradually increases in salt strength.

11. 1 as (9), one stage beyond (10); displacement of strong solution (about 330 to 450 gm. $NaNO_3$ per li. above mother liquor) starting by enriched wash liquor from (12) *via* heat exchanger (21) on the Diesel cooling-water circuit.

12. 1 as (9), one stage beyond (11); displacement proceeding from (13) through exchanger (22) on Diesel cooling-water circuit.

13. 1 as (9), one stage beyond (12); displacement from (13) through (23) on the ammonia-condenser cooling water.

14. 1 as (9), one stage beyond (13); displacement by mother liquor from storage tank (27) through ammonia-condenser exchanger (24). Total contact time with leach solution to end of this stage is about 80 hr.

15. 1 as (9), one stage beyond (14); first drain of mother liquor; displacement by third-wash water from (16*a*) *via* (28) with wash solution weaker than mother liquor recirculated to (28).

16. 1 as (9), one stage beyond (15); three water washes in series with progressively weaker solutions.

17. 1 as (9), one stage beyond (16); final displacement with salt river water from (31).

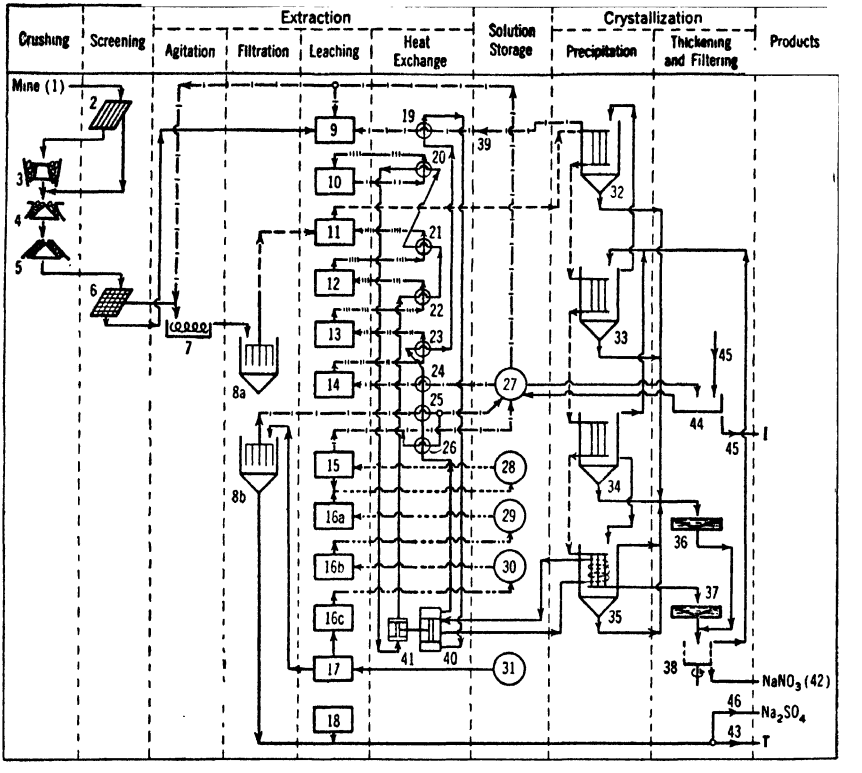

Legend for Fig. 49—Continued:

18. 1 as (9); unloading; time required, about 8 hr., using 2 @ 5-ton clamshell buckets; vat residue about 1 to 1.5% $NaNO_3$.

19. Indirect heat exchangers against ammonia-condensing cooling water.

20. Indirect gas-vapor heat exchanger against Diesel exhaust gas.

21, 22. Indirect heat exchangers against Diesel cooling water.

23–26. As (19).

27. Mother-liquor storage tanks.

28. Storage tank, first water wash.

29. Storage tank, second water wash

30. Storage tank, third water wash.

31. Storage tank, river water.

32–34. 14 cooling tanks, strong solution in exchange with refrigerated mother liquor; temp. in last tank, 15° C.

35. 6 cooling tanks in exchange with evaporating ammonia; temp. in last tank, 5° C.

36. 2 @ 20-ft. thickeners in parallel.

37. 2 @ 30-ft. thickeners in parallel.

38. 24 @ 48-in. basket centrifuges.

39. Evaporator tower, 35° C.; surge tank.

40. Ammonia compressors; ammonia side.

41. Diesel engines.

42. 98.8% $NaNO_3$.

43. 16-ton dump cars, electric haulage, to tailing pile.

44. Iodine tanks; sodium bisulphite added to reduce iodate.

$$2NaHSO_3 + KIO_3 \rightleftharpoons KI + Na_2SO_4 + H_2SO_4$$

then 1/5 more original iodate solution added, when

$$KIO_3 + 5KI + 3H_2SO_4 \rightleftharpoons 3I_2 + 3K_2SO_4 + 3H_2O$$

45. Filtered, retorted.

46. Water leach of vat residue contains about 125 gm. per li. Na_2SO_4 at 20° C. This is reduced to 45 gm. per li. by refrigeration to 0° C., the salt depositing as decahydrate, which is subsequently dehydrated by heating. Final product 97% pure.

FIG. 49. ANGLO-CHILEAN CONSOLIDATED NITRATE CORP.

Summary. Three-stage open-circuit crushing to 5/8-in.; slimes screened out at 20-m. dry; nitrate extracted from slimes at 60° C. by agitation and filtration; coarse material leached at 40° C.; strong solutions impoverished by selective crystallization of $NaNO_3$ by cooling to 5° C. Solution heated by waste heat from Diesel and refrigerating plants; about 80% of total heat value of fuel oil utilized.

30. PHOSPHATE

Properties. Phosphate rock (PHOSPHORITE) is cryptocrystalline mineral consisting of tricalcium phosphate combined with varying percentages of water, small amounts of $CaCO_3$ (usually under 10%), fluorine, usually 3 to 4%, and organic matter. Iron oxide and alumina are common impurities. The phosphorus content is commercially reported as B.P.L. (bone phosphate of lime, $Ca_3P_2O_8$). Merchantable rock contains 60 to 80% B.P.L., usually from 68 to 77%. Apatite, the crystalline mineral, $Ca_{10}F_2(PO_4)_6$, has a SP. GR. of approximately 3.2 but pebble phosphate ordinarily ranges 2 to 3. HARDNESS of apatite is 4.5 to 5.0; pebble phosphate usually 2 to 5. COLOR of pebble is white to gray, brown, or black; apatite usually has a greenish tint.

Uses. Approximately 80% of domestic pebble goes to acidulating plants making superphosphate; an even larger percentage of total production is used for fertilizer. Ferrophosphorus, phosphoric acid, and sundry phosphatic chemicals (including those used in baking powder and in cleansing preparations) are of increasing importance. In 1928 world consumption was 85% for superphosphate, 4% as raw ground rock for direct application to land, 2% for phosphoric acid (calcining and wet process), 5% for metallurgical purposes, and 4% for chemicals, elemental P, and miscellaneous; nearly 95% was ultimately used as fertilizer.

Occurrence. Apatite is a common minor constituent of igneous rocks. Pegmatites containing apatite (usually with other economic minerals) have been exploited in Norway, Ontario, Spain, Russia, and Virginia. In Idaho and adjacent States, British Columbia, and French North Africa the phosphate-rock deposits are of marine origin forming distinct beds, often of high purity, over wide areas. Other sedimentary deposits are residual or formed by disintegration and redistribution of phosphate rock or phosphatic limestones. In Florida, HARD-ROCK PHOSPHATE occurs in irregular fragmentary boulders and gravel embedded in a matrix of sand, clay, and soft phosphate (phosphatic clay); PEBBLE PHOSPHATE, which represents 70% of total U. S. output, comprises pebbles ranging in size from 1 1/2-in. diameter to fine sand, embedded in a matrix of clay and sand and generally overlain by variable thicknesses of overburden. The pebbles form from 10 to 50% of the matrix. In Tennessee, BROWN ROCK residual deposits are leached outcrops of phosphatic limestone; formerly thin beds of BLUE ROCK, similarly formed, were worked. Phosphates resulting from phosphatization of coral limestones by rainwater leaching through guano are mined extensively on various islands in the Pacific and Indian Oceans.

Production. World production was 3 million tons in 1900, to 7 million in 1920, and over 12 million tons in 1937; the United States and French African Colonies each produced about one-third. Pacific Islands produced about one-fourth and the remainder came from 50 or more smaller producing countries. Domestic consumption and exports roughly stabilized in recent years around 2,800,000 tons and 1,000,000 tons respectively. Florida produces 70 to 80% of total domestic output, Tennessee 20 to 30%; small but increasing quantities are mined in Idaho and Montana. The tonnage reserves in the northwestern United States are astronomical figures.

Selling. Lower grades are sold on guarantee of 4% maximum I AND A (Fe_2O_3 plus Al_2O_3); higher grades, 3% max. Size specifications vary; lump rock is preferred for production of ferrophosphorus, elemental phosphorus, and electric-furnace phosphoric acid. Most rock is dried to about 2% moisture before shipment; some, for special purposes, is calcined to remove organic matter. Average prices for Florida pebble phosphate since 1919 have ranged from a maximum of $5.38 per long ton in 1921 to $2.91 in 1933. Florida hard rock dropped from $11.31 per ton in 1920 to $5.75. In 1937, average prices f.o.b. Florida mines were $2.99 for pebble, $5.33 for hard rock, and $3.32 for phosphatic clay or soft rock; the average for Tennessee was $4.05. Prices of various pebble grades for domestic consumption ranged in 1938 from $1.75 to $3.50, value increasing 10 to 15¢ per unit for B.P.L. above 68%. Small quantities of rock carrying 35 to 50% B.P.L. are marketed in Florida or Tennessee for fertilizer filler; equally low grade material may be salable locally for making P.

Treatment formerly consisted in washing in log washers and high-pressure sprays, screening out and discarding all <14- or 20-m. material (largely quartz) to produce finished rock containing about 6% acid insoluble. Now froth or table flotation recovers 80% of the phosphate in washer fines, and over-all recovery has increased from about 50% to about 90%.

American phosphate plants have been unable either to recover slimed phosphate mineral, or granular phosphate in the presence of the ore slimes. Both failures are probably due to the clayey nature of the slimes. Russian phosphate ore composed of apatite in original igneous rock is recovered by flotation, however, in the presence of ore slimes in the usual fashion of floating ground ores (see Fig. 56).

Electrostatic separation is claimed (*142 #3 J 35*) to make 80% concentrate, with recoveries even better than are possible by flotation; if such a claim proved true, the indicated flowsheet (for fines) would be rough concentration by flotation, pushed to make clean tailing and high recovery, retreating concentrate after drying by electrostatic separation.

Hard-rock phosphate plant, Fig. 50 (*148 A 268*).

Location: Northern Florida.

Crude matrix: Phosphatic material ranging from 100-m. sand to 25-ft. boulders together with flint pebbles and boulders and fragmental phosphatic limestone, all in clay. The hard phosphate rock may assay as high as 82% B.P.L.; the sands, particularly the finer, are softer, carry much more I&A and are much lower in B.P.L.

Concentrate: 72 to 81% B.P.L. in sizes from 48-m. to 2 1/2-in.

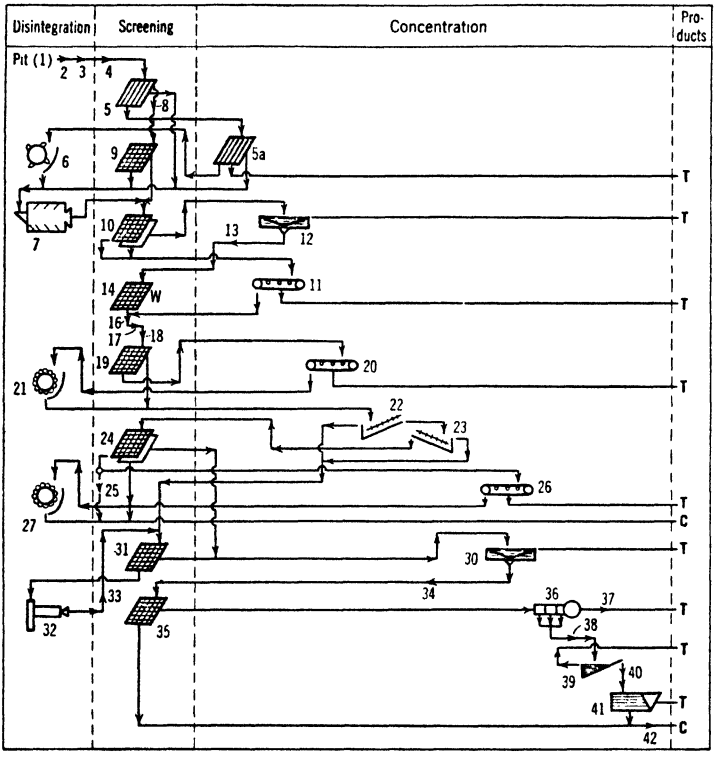

Legend for Fig. 50:

1. Dipper dredges or draglines. Buckets usually 3-cyd. or less on account of the difficulty in handling larger boulders in the plants; large boulders are mudcapped in the field.

2. 7-cyd. skips on incline.

3. ***Field washer***

4. Receiving hopper.

5. Roll grizzly, first part (14 ft.; 6-in. openings), inclined 40° over a transversely divided hopper.

5a. Lower end (5 or 6 ft.) of (5) is horizontal (4-in. openings) over part of lower hopper; it is used for hand-picking coarse waste, washing with 100-lb. water (500 g.p.m.), and regulating feed rate to (6).

6. 24×54-in. single-roll crusher, 6-in. set.

7. 1 @ 7×14 1/2-ft. A-C blade mill (Sec. 10, Art. 3).

8. Surge bin.

9. Screen feeder, 5/32- to 3/16-in. punched-plate jacket.

10. 1 @ 7×14-ft. 2-deck vibrating screen, 1/4 ×1 1/4-in. and 14-m. apertures. Upper deck serves to place coarse above fine on (11).

11. 1 @ 36-in. picking belt.

12. Hydro-bowl classifier.

13. Centrifugal pump.

14. Dewatering screen.

15. As (13).

16. Gondola cars.

17. ***Central plant***

18. Hopper; 3-cyd. skip; receiving hopper.

19. Revolving screen, 2 1/2-in. apertures.

20. Picking belt or table.

21. Single-roll crusher, 2 1/2-in. set.

22. 1 @ 30-ft. duplex log washer with dewatering overflow.

23. 1 as (22), 20-ft.

24. 1 double-jacket revolving screen, 1 1/2-in. and 14-m. apertures.

25. Alternative.

26. Picking belt.

FIG. 50. Hard-rock phosphate washer.

Legend for Fig. 50—Continued:

27. Fluted single-roll crusher.
28. Belt conveyor; bin; conveyor; wet stockpile.

29. *Recovery plant*

30. As (12).
31. Vibrating screen, 14-m. aperture.
32. Rod mill.
33. Bucket elevator.
34. As (13).
35. Vibrating screen, 18-m. opening.
36. Fahrenwald sizer.
37. <48-m.
38. Elevator; surge bin.
39. Rake classifier.
40. Bucket elevator.
41. Table flotation.
42. Dewatering drag.

Summary. Plant comprises one or more semiportable field plants making a rough concentrate, which is finished at a central, more permanent mill. Treatment consists of successive rejections of tailing at progressively smaller sizes, with intervening disintegration and comminution of the gradually enriched rough concentrates. Methods of concentration employed are screening, hand picking, log washing, classification, and table flotation. Concentrate is sent wet to a central drying (and calcining) plant.

International Agricultural Corp., Mt. Pleasant plant, Fig. 51 (*142 # 1 J 50; 144 # 3 J 68*).

Location: Mt. Pleasant, Tenn.
Crude: Clayey.

Legend for Fig. 51:

1. 2-cyd. end-dump cars by steam locomotive; inclined hoist for single cars; sluicing with 125-lb. water.
2. 1 @ 25-ft. McLanahan-Stone log washer, run to just overflow through a 1-in. side grating.
3. 1 as (2).
4. Ty-rock 2-deck screen, 1-in. and 3/8-in. apertures.
5. Picking belt.
6. 1 @ 6 1/2×6-ft. ball mill, 8,000 lb. 3-in. balls.
6a. 2×4-ft. trunnion trommel on (6); 1/4-in. aperture.
7. Wasted if high in flint.
8. Jet tank = settling tank with hydraulic water on spigot discharges.
9. Drag classifier.
10. 12-ft. screw washer.
11. 12-ft. 3-jet tank.
12. 1 @ 4×6-ft. vibrating screen, 1/4-in. aperture.
13. Settling tank.
14. 1 triple-deck rake classifier.
15. 1 as (8).
16. 1 @ 60-ft. thickener.
17. Hydro-bowl classifier.
18. 1 @ 8-ft. drag classifier.
19. 1 as (18).
20. 1 as (8).
21. 1 as (18); sands 35~200-m.
22. Alternative.
23. 1 as (8).

Generalized flotation flowsheet

24. Classifier making 35-m. separation.
25. Rod mill, light rod load, to reduce to <35-m.
26. Bowl-rake classifier.
27. Conditioner, usually agitator boxes of the old M-S type (Sec. 12, Art. 27), two or more in series. Usual reagents are caustic soda, fish-oil fatty acids, fuel oil, and a rosin-oil frother.
28. 4- to 6-cell subaeration machines.
29. 2- to 4-cell subaeration machines.

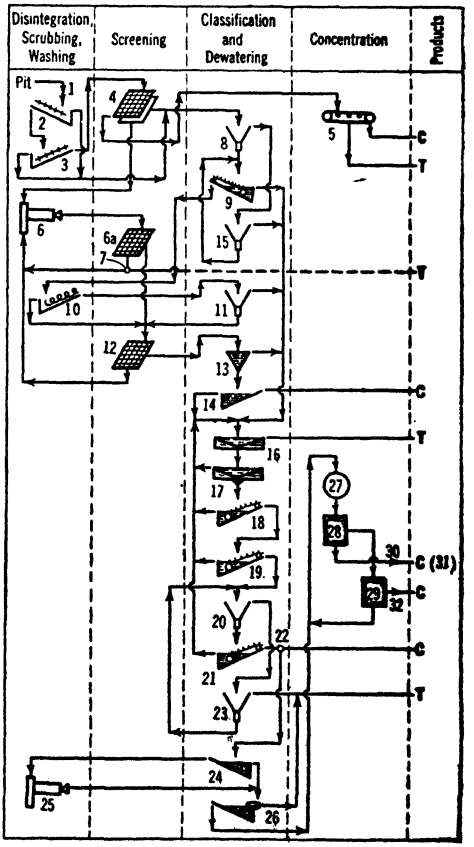

30. Dewatering drag, water recirculated to (27) and (28).
31. Low-grade phosphate product.
32. Dewatered; dried.

FIG. 51. INTERNATIONAL AGRICULTURAL CORP., Mt. Pleasant plant.

Summary. Disintegration by log washers, sizing of log product at 1-in., and concentration of >1-in. size by hand picking. Reduction of <1-in. material to 1/4-in. and concentration of <1/4-in. material by classifier washing to recover a 1/4-in.~35-m. concentrate, the separation being dependent on the fact that most of the siliceous impurity is <35-m. Prolonged (and expensive) washing of <35-m. to produce a slime-free 35~200-m. sand for flotation feed, with discard of slime through a thickener and hydro-bowl classifier in series. Soap flotation of the resulting product to make a high-grade (72–75% B.P.L.) concentrate and a low-grade siliceous phosphatic concentrate satisfying certain trade demands, *e.g.*, furnace trade.

Southern Phosphate Corp., Fig. 52 (*129 A 295*).

Location: San Gully, Fla.
Crude: Pebble phosphate.

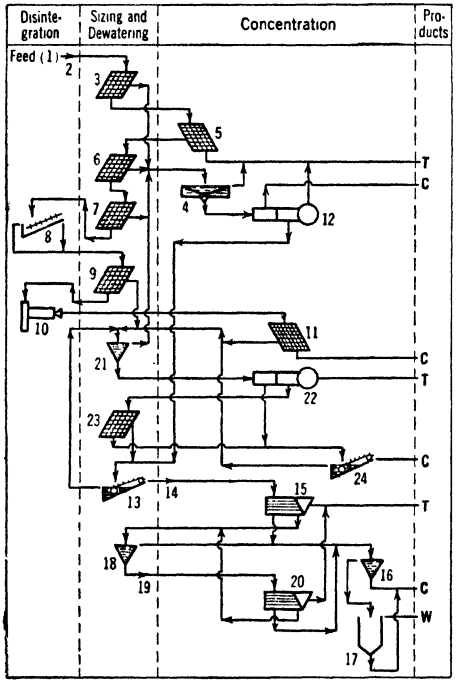

Legend for Fig. 52:

1. Hydraulic mining.
2. 1 @ 4×6×12-ft. hopper.
3. 1 @ 41-in.×12-ft. stationary screen, slope 1 1/2 i.p.f.; 3/64-in. slots.
4. 1 @ 40-ft. hydro-bowl classifier.
5. 2 @ 4×12-ft. trommels, 1 1/2-in. rd. apertures, 19 r.p.m.
6. 2 @ 41-in.×14-ft. stationary screens; slope, 1 3/4 i.p.f.; 3/64-in. slots.
7. 2 @ 5×8 1/2 Gyrex screens, 3/64-in. aperture.
8. 2 @ 21-ft. 2-log washers (pipe-type); slope 1 3/16 i.p.f.; 27 r.p.m.
9. 2 @ 5×12-ft. Gyrex screens, 5-m. aperture.
10. 1 @ 8-ft.×36-in. Hardinge mill with 6-in. flights (no balls), 26 r.p.m.
11. 1 as (9).
12. 3 @ 6-pocket Fahrenwald classifiers.
13. 1 @ 5×25-ft. Esperanza drag classifier.
14. 1 @ 24-in. belt conveyor, 300 f.p.m.; 2 @ 22(diam.)-ft., 300-ton bins; 2 @ 5×5-ft. Denver conditioners; 2 @ 20-in. belt-bucket elevators, 300 f.p.m.; 4 @ 8-way Concenco revolving distributors.
15. 32 @ No. 6 Deister-Overstrom diagonal-deck shaking tables.
16. 1 @ 10-ft. Allen tank.
17. 1 @ 20(diam.)-ft., 300-ton bin.
18. 1 as (16).
19. 1 @ 3×3-ft. Denver conditioner; 1 @ 3-way Concenco distributor.
20. 3 as (15).
21. 1 as (16).
22. 2 as (12).
23. 2 @ 4×5-ft. Link-Belt vibrating screens, 16-m.
24. 1 as (13).

FIG. 52. SOUTHERN PHOSPHATE CORP., San Gully plant.

Summary. Disintegration by log washing and rotary tumbling; washing in screens and hydraulic classifiers; recovery of fine granular phosphate by table flotation.

Southern Phosphate Co., Pauway washer, Fig. 53 (*34 #5 PQ 43*).

Location: Pauway, Fla.
Capacity: 1,000 long tons per day.
Crude: Phosphate debris, 30% B.P.L.; some >1/2-in., mostly <20-m.
Products: Concentrate, 76% B.P.L.; tailing, about 7% B.P.L.
Recovery: 90%.
Ratio of concentration: 3 : 1.
Labor: 20 men per shift.
Building: Steel.

Legend for Fig. 53:

1. Hydraulic mining.
2. 1 @ 8-in. volute-type centrifugal sand pump, 150-hp. motor; about 1/2 mi. 8-in. pipe to plant; receiving box.
3. 1 @ 5×12-ft. 2-deck Gyrex screen, 1/2-in. and 1/4-in. sq.-mesh wire cover.
4. 6-way distributor.
5. 6 @ 10×10-ft. pyramidal Allen sand tanks.
6. 3 @ 6×6-ft. as (5); primarily surge tanks.
7. 3 @ 8-pocket Fahrenwald classifiers.
8. Spigots 1 to 3, >28-m.; receiving tub (turbid overflow wasted); pumped to concentrate bins.
9. 2 receiving tubs; 2 @ 6-in. Wilfley pumps; 2 @ 300-ton feed tanks (turbid overflow wasted).
10. 2 @ 5×5-ft. Denver conditioners, 15-in. propellers, 325 r.p.m.; water added to bring pulp to 50 to 60% solids.
11. 2 Link-Belt elevating conveyors; 4 @ 8-way Concenco revolving distributors (diluted to 30% solids); 4-in. pipe launders at 4 i.p.f. minimum slope.
12. 32 @ No. 6 (6×15-ft.) Deister Super-duty diagonal-deck shaking tables; Masonite decks; 5/16-in.×1/4- to 1/8-in. riffles spaced 1 1/2 in., every 8th riffle a pool riffle (1/16 in. higher); untapered riffles 1/16 in. high in dressing zone; 290 r.p.m.
13. 5-in. Wilfley pumps.
14. 1 as (5).
15. Surge tank.

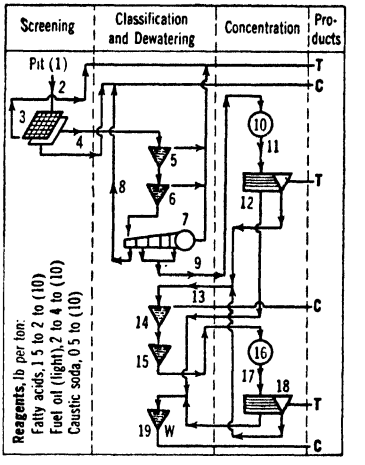

16. 1 @ 3×3-ft. Denver conditioner, 12-in. propeller, 405 r.p.m.
17. 4-way Concenco distributor.
18. 4 as (12).
19. 1 as (5).

FIG. 53. SOUTHERN PHOSPHATE CORP., Pauway plant.

Summary. Coarse waste scalped out at 1/2-in.; coarse phosphate screened out at 1/2~1/4-in. and classified out at 1/4-in.~28-m.; thoroughly deslimed sand table-floated with fatty acid and fuel oil. Compare with Fig. 54.

American Agricultural Chemical Co., Carmichael No. 1 plant, Fig. 54 (*141 # 11 J 55*).

Location: Carmichael, Fla.
Crude: Pebble phosphate debris.
Capacity: 60 t.p.h.

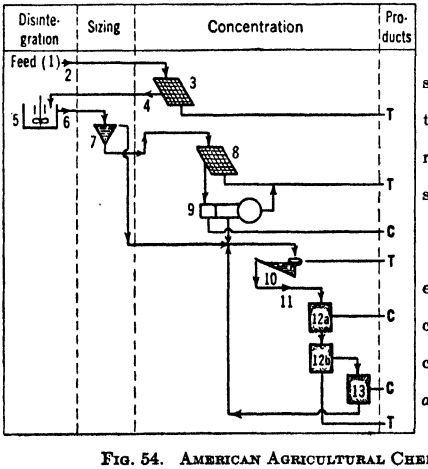

Legend for Fig. 54:

1. Debris pit.
2. 8-in. reclaiming pump, 10-in. line; 30% solids.
3. 1 @ 4×10-ft. Vibrex screen, 1/4-in. aperture.
4. 4 @ 20(diam.)-ft., 250-ton steel tanks with radial wall sprays to prevent coning.
5. 1 @ 6×8-ft. Denver conditioner, used as a scrubber.
6. 1 @ 6-in. volute pump.
7. 1 @ 8-ft. Allen sand cone.
8. 1 @ 4×8 1/2-ft. Vibrex screen.
9. 2 @ 5-pocket Fahrenwald classifiers; pockets 1 and 2 making concentrate.
10. 1 @ 25(diam.)×8×35-ft. duplex bowl-rake classifier.
11. 2 @ 24-in. conveyor belts in series; 1 mixer, comprising 4 M-S agitator boxes in series.
12. 2 @ 4-cell flotation machines in parallel; *a* = cells 1 and 2; *b* = cells 3 and 4.
13. 1 @ 2-cell flotation machine.

FIG. 54. AMERICAN AGRICULTURAL CHEMICAL CO., Carmichael No. 1 plant.

Summary. Coarse waste scalped out at 1/4-in.; residue scrubbed by attrition; coarser phosphate removed by hydraulic classification; fines deslimed and floated with soap and petroleum oil. Compare with Fig. 53.

International Minerals & Chemical Corp., Peace Valley plant, Fig. 55 (*143 ¶ 9 J 43*).

Location: Pembroke, Fla.
Capacity: 2,500 to 3,000 t.p. 24 hr. concentrate; 350 to 450 cyd. per hr. minimum of matrix.
Crude: Virgin pebble phosphate.
Product: Standard grades (see *Selling,* p. 70).
Water: 18,000 g.p.m.

Legend for Fig. 55:

Two sections in parallel as follows:

1. Debris mined by dragline; hydraulicked to pump and pumped to plant.
2. Shaking screen, 3-i.p.f. slope, 48 sq. ft., 3/64×1-in. slots parallel to flow.
3. 1 @ 4×12-ft. screen washer, 1 1/2-in. aperture.
4. 1 @ 18×24-in. single-roll crusher, 15-hp. motor.
5. 1 @ 10-in. Hydroseal pump, 150-hp. motor (serves both sections).
6. 1 @ 120-sq. ft. shaking screen, cover as (2), 2-i.p.f. slope.
7. 1 @ 4×12-ft. Low-head screen, 3/8-in. aperture (1 @ 4×10 1/2-ft. Eliptex screen in parallel section).
8. 1 @ 20-ft. double-log washer, corrugated cast-iron blades, 30-hp. motor.
9. 1 as (8).
10. 2 @ 4×8-ft. Hum-mer screens in parallel, 1-mm. aperture.
11. 1 as (7) for both sections, 1/2-in. sq. aperture.
12. 1 @ 30-ft. (long) duplex rake classifier.
13. 2 as (10).
14. 1 @ 40-ft. hydro-bowl classifier, 35-m. separation.
15. 1 @ 8-in. centrifugal pump, 75-hp. motor.
16. 1 @ 4×12-ft. trommel, 3/16-in. aperture.
17. V-box.
18. 6 @ 6-pocket Fahrenwald classifiers, 35-m. separation.
19. 6-in. centrifugal pump.
20. 2 bins, 450 tons combined capacity.
21. 1 as (12).
22. 1 @ 5×16-ft. A-C rotary mixer; 1 @ 24-in. belt-bucket elevator; 1 @ 3-way Deister distributor; 3 @ 5-way Deister distributors.
23. 15 @ No. 6 diagonal-deck Super-duty Deister shaking tables.
24. 1 Hydroseal pump.
25. 1 @ 75-ft. hydro-bowl classifier, 150-m. separation.
26. 1 @ 8-in. centrifugal pump.
27. 6 bins, 1,800 tons combined capacity.
28. 2 heavy-duty quadruplex rake classifiers.

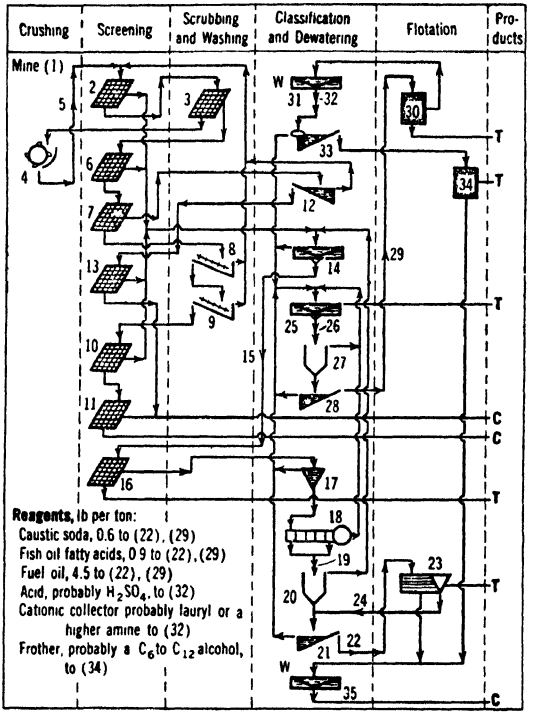

29. 2 @ 36-in. belt conveyors; 2 banks of 4 @ 60-in. agitator-type cells without spitzkasten.
30. 6 banks of 4 @ 54-in. M-S Air-flow cells. Soap float made here.
31. 1 @ 30-ft. thickener. Overflow to a constant-head tank for use in (30).
32. 1 @ 6-in. centrifugal pump; 1 @ 4-cell bank of 60-in. agitation-type mixers. Thick pulp acidified with H_2SO_4, agitated to loosen acid-soap coating.
33. 1 @ 25-ft.-bowl quadruplex-rake classifier to remove oleic acid.
34. 4 @ 6-cell 54-in. M-S Air-flow cells with amine and oil. Concentrate grade raised from 72 to + 76% B.P.L.
35. 1 @ 30-ft. thickener.

FIG. 55. INTERNATIONAL MINERALS & CHEMICAL CORP., Peace Valley plant.

Summary. Disintegration by scrubbing and washing, with a single-roll crusher to tear clay balls. Concentration of coarser pebble by sizing; 14~35-m. carefully deslimed, conditioned in a thick pulp and table-floated; <35-m. carefully deslimed, roughed by froth-flotation with fatty-acid collector; rough concentrate cleaned by depressing soap-oil-coated phosphates by an attrition treat with acid and floating quartz in acid pulp with a cationic collector.

Apatite Trust, Fig. 56 (*133 J 429*).

Location: Khibinogorsk, Russia.
Crude: 65 to 70% apatite, balance principally nepheline with a little ilmenite.
Concentrate: 39.5% P_2O_5.
Recovery: 95%.
Ratio of concentration: 1 1/2 : 1.
Distances: Mine to mill, 6 km.

Legend for Fig. 56:

1. 15-ton inverted-V-bottom self-dumping cars; 160-ton bin; 42-in. pan conveyor; <14-in. material.
2. 2 @ No. 20-A Telsmith gyratory crushers, 3-in. open setting.
3. 2 @ 24-in. belt conveyors.
4. 2 @ 5 1/2-ft. standard cone crushers, <1-in. product.
5. 2 @ 24-in. belt conveyors; 1 @ 36-in. belt conveyor with tripper; 1 @ 2,200-ton bin; 18 feeders.

2 sections, each substantially as follows:

6. 2 @ 5×10-ft. rod mills; apatite grinds selectively; 21 r.p.m.
7. 2 @ 6×25-ft. rake classifiers, overflow 33% solids, <80-m.
8. 2 @ 5×10-ft. ball mills; 29 r.p.m.; capacity low because mostly grinding nepheline.
9. 2 as (7).
10. 2 @ 4-in. Wilfley pumps.
11. 1 @ 8×8-ft. conditioning tank.
12. 1 @ 12-cell 24-in. Fahrenwald flotation machine.
13. 1 as (12).
14. 1 as (12).

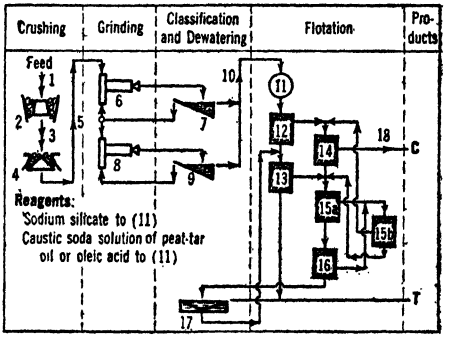

15. 1 as (12); *a* = cells 9 to 12; *b* = cells 1 to 8.
16. 1 as (12).
17. 1 @ 24-ft. thickener.

Streams joined

18. 6 @ 750-sq. ft. Genter thickeners, spigot 65 to 70% solids; 6 @ 6-ft. 5-disk filters; 6 @ 6×30-ft. rotary driers (2% moisture).

FIG. 56. APATITE TRUST.

Summary. Two-stage open-circuit crushing from <14-in. to <1-in.; 2-stage grinding to 80-m. Rougher-scavenger flotation with one stage of cleaning and reflotation of cleaner middling with intervening de-colloiding.

Southern Mineral Products Corp., Fig. 57.

Location: Piney River, Va.
Ore: Ilmenite and apatite in nelsonite.
Capacity: 100 t.p.d.
Assays: Feed: 18% TiO_2; ilmenite concentrate, 42% TiO_2; apatite concentrate, 40% P_2O_5; tailing, 2% TiO_2.
Recovery: TiO_2, 90%; P_2O_5, 55%.

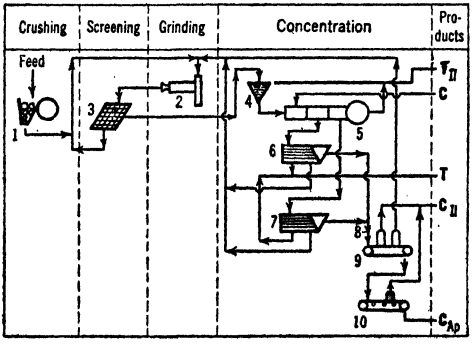

Legend for Fig. 57:

1. Coarse crushing.
2. Marcy rod mill.
3. 2 Hum-mer screens, 35-m.
4. Callow cone.
5. Fahrenwald classifier; overflow, 45 t.p.d. @ 2% TiO_2 and 4% P_2O_5.
6. 2 shaking tables.
7. 2 as (6).
8. 2 Akins classifiers (dewatering); drier; 47 tons mixed concentrates.
9. Magnetic separator; micaceous middling.
10. Magnetic separator.

FIG. 57. SOUTHERN MINERAL PRODUCTS CORP.

Summary. Crushing and grinding through 35-m. screen; concentration by classification and tabling in series, with separation of table concentrate (mixed) by magnets.

31. POTASH

Properties. In commerce, POTASH is a general term applied to the theoretical equivalent in potassium oxide (K_2O) of all potassium compounds. The principal potash mineral throughout the world is sylvite (KCl). Prior to 1940 it was the only soluble potash mineral mined in the United States (except for minor accessory constituents). Color is milky white to reddish brown, the latter color owing to the presence of a flocculent substance resembling algae in form but of unknown character. LUSTER is vitreous; CLEAVAGE cubical; CRYSTALLIZATION isometric; TASTE, usually described as bitter, is actually about as salty as that of halite, and it produces a cooling effect on the tongue; HARDNESS, 2.2.; SP. GR. 1.98. Other potash minerals are carnallite (KCl, $MgCl_2 \cdot 6H_2O$), langbeinite ($2MgSO_4 \cdot K_2SO_4$), polyhalite ($K_2SO_4 \cdot MgSO_4 \cdot 2CaSO_4 \cdot 2H_2O$), and kainite ($MgSO_4 \cdot KCl \cdot 3H_2O$) [KAINITE of commerce is a low-grade fertilizer which may consist of any soluble salt or mixture containing the equivalent of 14 to 20% K_2O].

All the foregoing salts except polyhalite are soluble and more or less important commercially; known reserves of polyhalite are large. Potash is a constituent of many other minerals that are rare or at least not utilized as commercial sources. SILVINITE is a mechanical mixture of sylvite and rock salt or halite (NaCl); in commercial usage the name is applied to various kinds of salts of high potassium content (20 to 42% equivalent K_2O) without regard to composition.

Uses. Over 90% of all potash used in the United States is consumed in agriculture. Nonagricultural uses are, nevertheless, important even when the potassium is merely the ion accompanying a negative ion such as permanganate, bichromate, tartrate, or chlorate. Potassium metal has never had real commercial significance because for almost every purpose it is less efficient than sodium and costs about 50 times as much; domestic consumption is only 50 lb. a year, imported from Germany. Most industrial potassium salts are made from the chloride.

Occurrence. Potassium is widely distributed in feldspar and other rock-forming minerals and dissolved in lake, river, and ocean waters, but workable deposits are confined to salt lakes or beds that have resulted from evaporation, under hot, arid conditions, of saline waters in an arm of the sea or a large salt lake. Such deposits usually consist principally of NaCl but the potassium salts are sometimes selectively concentrated in lenses at various elevations. Some producing potash mines, notably those in southern Germany (Baden), Spain, and southern Poland, are in beds of Tertiary age, but many of the world's best-known deposits, including those of northern Germany, northern Poland, the U.S.S.R., and New Mexico, are of Permian age. The Permian basin in the United States underlies a huge area in Colorado, Kansas, Oklahoma, Texas and New Mexico, but the potash deposits seem to be segregated in a roughly circular area in the southern part, in New Mexico and Texas. Reserves are difficult to estimate, even by closely spaced drilling, owing to irregularity in extent of the potash-rich salts at any given horizon. At Carlsbad, N. Mex., the principal bed now worked is about 10 ft. thick and averages 25% or more K_2O; by lowering the limit for mining to 9%, the thickness of "ore" would be increased to 140 ft.

Production. World production in the 1930's, in terms of K_2O content, consistently exceeded 2,000,000 metric tons yearly, and has risen as high as 2,500,000 tons, of which roughly 60% came from Germany, 15% from France, 10% from the United States, 9% from the U.S.S.R., 4% from Poland, and the remainder principally from Spain and Palestine. In 1937 sales of domestic potash were 270,000 short tons and imports for consumption were 352,300 tons, making apparent consumption around 622,000 tons K_2O.

Selling. Fertilizer manufacturers generally are interested only in the soluble potash (equivalent K_2O) although for certain crops, notably tobacco, sulphate is preferred, especially when accompanied by magnesia. Prices of potassium salts in the United States pre-war were largely controlled by schedules published annually by the New York office of the N. V. Potash Export My., Inc., American sales agent for French and German producers, discount being allowed on orders placed before specified dates for spot shipments and regular deliveries during the following season. Price schedules for the season July 1, 1938, to May 31, 1939, issued in May, 1938, quoted MURIATE (50% K_2O) at 53 1/2¢ per unit of K_2O, 30% MARINE SALT at 58 1/2¢ per unit, 20% KAINITE at $12.75 per ton (bulk), 90% sulphate of potash at $38 per ton in bags, and sulphate of potash-magnesia (48% K_2SO_4) at $25.75 per ton in bags. Discounts were 12% to June 30, 5% to September 30, and net thereafter. These prices are based on seaboard delivery, to which must be added freight to inland consuming points.

Treatment. A variety of processes has been developed with a view to recovering potash salts from feldspar, leucite, and other silicate minerals and rocks; from alunite; and from glauconite—usually by acid leaching, alone or following heat treatment. Volatilization processes also are feasible and NaCl has been added to cement kilns and even iron blast furnace charges to increase the yield of potash in flue dusts which still form a minor source of potash for direct application to the soil. Using porphyry-copper mill tailings in Utah, a process has been developed in the laboratory (*RI 3349*) whereby 90% of the potash is recovered in a 90% KCl product. Immense quantities of such tailings are available, already finely ground, and other necessary raw materials are cheaply availa-

ble locally. The tailings, mixed with salt and coal, are heated to 800° C. and cooled first in a closed container and later in air before leaching with water.

Niter, KNO_3, is obtained from the soil of old village sites in India, and is separated from Chilean sodium nitrate, $NaNO_3$, by fractional crystallization. The leaching of hardwood ashes was so important in the early days that not only K_2CO_3 but even the lye obtained by treating pot ashes with CaO became known as potash. In New Mexico, mine-run salts are taken from headframe bins to crushing plants by belt conveyors and a product sized between 6- and 10-m. is obtained by further screening without hand picking or sorting, and sold as manure salts containing 40 to 48% KCl (equivalent to 25 to 30% K_2O).

High-grade muriate, however, is also made in New Mexico. The UNITED STATES POTASH Co. makes a white, precipitated product containing 99% KCl by solution and crystallization. Somewhat similar methods are employed in Europe, although practice in other countries varies in mechanical detail and in the attention given to fuel economy.

Treatment of the mixed chloride salts depends ultimately on the difference in their variation in solubility with temperature, as shown in Fig. 58. Excluding salt effects, a brine saturated at normal temperatures (say 20° C.) will dissolve considerably more of the potassium salt than of the sodium salt from a mixture of the two, when heated; if then separated from the solid and cooled, it will crystallize only KCl over a considerable temperature range, and, by refrigeration below about 25° C., can be denuded selectively of KCl.

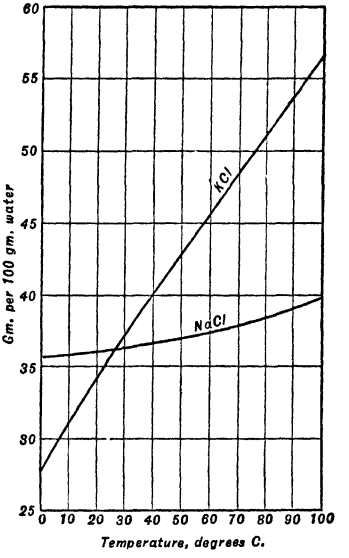

FIG. 58. Solubilities of KCl and NaCl in water.

At Carlsbad, N. Mex., the mixed salts are crushed and then leached in closed dissolvers with almost boiling solution. As this does not dissolve NaCl the latter is sluiced out with cold water before the next charge of crude salts is added for a new cycle. The saturated liquor from the dissolvers is pumped through three vacuum coolers in series. After removing the precipitated KCl in an Oliver filter, the liquor is heated again and sent back to the dissolvers.

Flotation is now used to make the bulk of the preliminary separation of halite from sylvite. Separation is made in a brine saturated with both salts. Very little water is used—no more than can be pumped from the mine itself—which is an advantage in the arid southwest, where the deposits occur. Either mineral may be floated, according to the collector used. See Figs. 59, 60.

At Bonneville, Utah, a mixture of NaCl and KCl obtained by solar evaporation is harvested and then separated by froth flotation.

Potash Co. of America, Fig. 59 (*34 #2 PQ 37; 143 #1 J 38*).

Location: Carlsbad, N. M.
Assays: R.o.m. about 38% KCl; flotation concentrate (cell underflow) averages about 96% KCl.
Recovery: About 86% upward by flotation; upward of 95% overall.

Legend for Fig. 59:

1. 5-ton cars; rotary car dump; pan conveyor.

2. Jeffrey single-roll crusher, 4-in. set. Underground.

3. Skip pocket; semiautomatic Link-Belt counterbalanced-chute feeder; 2 @ 5-ton skips in balance, 1,200 f.p.m.; 1,500-ton headframe bins; belt conveyors to mill.

4. Grizzly.

5. Cone crusher.

6. Jeffrey-Traylor vibrating screen, 10-m. aperture.

7. 4 as (6).

8. 4 A-C smooth rolls.

9. 25 to 30% K_2O.

10. 4 tube mills and 1 @ 6×6-ft. ball mill. Grinding done in brine saturated with sylvite and halite at room temperature. Corrosion is a serious problem with all steel in contact with brines.

11. 5 Akins classifiers.

12. Thickener; overflow to brine system; underflow about 30% solids.

13. M-S subaeration machine, 10 cells; *a* = first few cells; *b* = remaining cells. Reagents are Coco-oil or other brine-soluble soap, 0.5 lb. per

Legend for Fig. 59—Continued:

ton added in stages; gas oil, a few tenths of a pound per ton of solid, excess stabilizes a slimy froth; 0.2 lb. per ton of cresol, which is nonfrothing in brine, but acts, with Coco-oil soap, to decrease froth volume, and increase selectivity by making the froth brittle; caustic starch, 0.25 to 0.5 lb. per ton, aids settling and has some beneficial effect on frothing; $PbCl_2$ sufficient (about 0.25 lb. per ton) to maintain a concentration in brine of 2 gm. Pb per liter of brine; *p*H about 7.

14. M-S subaeration machine, 6 cells.

15. M-S subaeration machine, 6 cells.

16. Thickeners.

17. Moore filters; leaves washed in salt brine.

18. Saturated brine.

19. Baker-Perkins continuous centrifuge, 4% moisture in discharge; Ruggles-Coles gas-fired driers.

20. 61.5% K_2O.

21. Hot-water-heated agitators to raise temperature a few degrees and dissolve KCl.

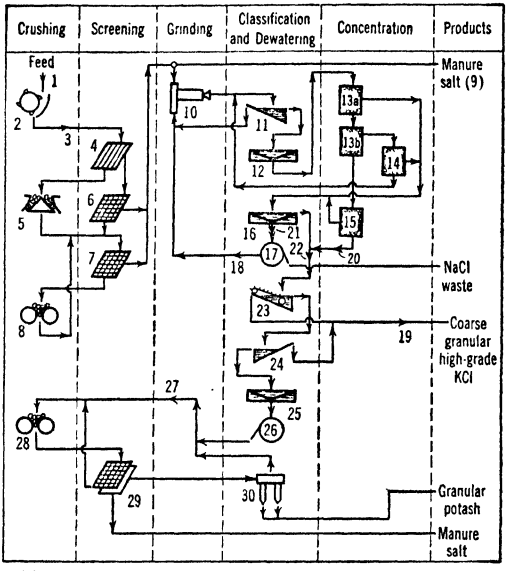

22. Cooled agitators for precipitation of KCl.

23. Drag classifier.

24. Akins classifiers.

25. 2 thickeners.

26. Filter with Monel metal screen, 9% moisture in cake.

27. Two rotary driers, as (19); surge bin; 3 mixers, a small amount of water added; 3 briquet presses making $1/2 \times 3/4 \times 6$-in. elliptical stick briquets; 24-hr. curing with warm air.

28. Rolls.

29. 2-deck Hum-mer screen.

30. Multiclone collector.

FIG. 59. POTASH CO. OF AMERICA.

Summary. Halite froth-floated from sylvite in saturated halite-sylvite brine with soap.

Union Potash Co., Fig. 60 (*142 # 4 J 65*).

Location: Carlsbad, N. Mex.
Capacity: 2,100 t.p.d.
Ores: Sylvite, halite, langbeinite.
Products: Muriate of potash, 60% min. K_2O; 50% muriate; granular muriate, 50% K_2O; washed langbeinite, 22% K_2O (40% K_2SO_4), 18.5% MgO; sulphate of potash, 48 to 50% K_2SO_4.

Legend for Fig. 60:

1. Separate hoppers for crude langbeinite and crude sylvite below 900-ft. level.

2. 1 @ 5×25-ft. pan conveyor under hoppers (1).

3. 1 @ 36×54-in. Jeffrey single-roll crusher, 4-in. set.

4. 1 @ 75-ton and 1 @ 125-ton skip pockets, manual arc gates to 2 chutes for each pocket; counter-weighted revolving chutes; shaft skips; 2 @ 250-ton headframe bins with pan feeders; belt conveyor.

5. Jeffrey Flextooth crusher.

6. Jeffrey hammer mills.

7. Conveyanscreens, 5- to 8-m. apertures.

8. According to composition.

9. Sylvite ore; 2 storage bins.

10. Admixed with sylvite-halite brine.

11. Duplex rake classifier.

12. Splitter.

13. Hydro-bowl classifier.

14. 2 thickeners.

15. Duplex Akins classifier.

16. 1 @ 6×12-ft. rod mill.

17. Pump.

18. 8 @ 54-in. Fagergren rougher cells. Reagents C_{16}–C_{18} amines, 0.3 to 0.5 lb. per ton; steam-distilled pine oil, 0.25 lb. per ton; boiled (or causticized) starch to flocculate slime.

19. Thickener.

20. Filter.

21. 4 as (18).

22. 3 as (18).

23. Alternative.

24. Simplex Akins classifier, 80-m. split.

25. Top-feed Oliver filter.

26. 1 @ 5×40-ft. gas-fired parallel-flow rotary drier; shift bins.

27. Thickener.

28. Oliver filter.

29. Trommel, 8-m.

30. 2 Conveyanscreens, 22-m. aperture.

Legend for Fig. 60—Continued:

31. Drum mixer, conditioning in thick pulp with upwards of 1 lb. per ton of C_{16}–C_{18} amines and light fuel oil; 6-way splitter.

32. 6 Super-duty diagonal-deck shaking tables (table flotation). Reagents not disclosed, but for flotation of sylvite probably as in (18) plus a small amount of petroleum oil, all added in (31). If halite is floated, soap and petroleum oil are the probable reagents added in (31).

33. Chain-drag dewaterer, overflow to (14) or equivalent.

34. Esperanza classifier, overflow to (14) or equivalent.

35. Drier.

36. Langbeinite ore; 2 storage bins; apron feeders; belt conveyor; screw conveyor with water added.

37. Duplex rake classifier.

38. 1 as (25).

39. 1 as (26).

40. Akins classifier; brine added.

41. Ball mill.

42. Agitator.

43. Heated crystallizing vats.

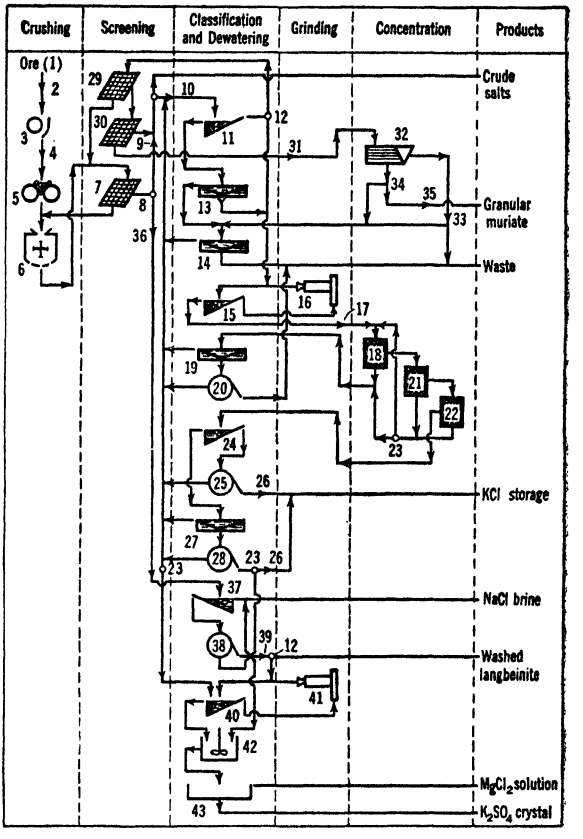

FIG. 60. UNION POTASH CO.

Summary. Crude sylvite and crude langbeinite treated in separate streams. Sylvite floated from halite in saturated sylvite-halite brine, at <35-m. by froth flotation, and at about 8~22-m. by table flotation. Langbeinite water-washed to remove halite in solution. Langbeinite and sylvite base-exchanged by fractional crystallization to recover potassium sulphate.

32. PUMICE AND PUMICITE

Properties. PUMICE is block and smaller fragments of glassy frothlike lava. In the better grades the vesicles are relatively uniform in size and character, usually elongated slightly. Completely shattered lava, formed of small shards or bubble fragments of volcanic glass, is termed VOLCANIC ASH or, commercially, PUMICITE. Often it looks like closely packed glassy sand, but generally shows sparkling points in bright sunlight. Magnified particles exhibit marked angularity, most of them being clear glass. The copyrighted term SEISMOTITE refers to pumicite; and other names are GEYSERITE and GIBSON GRIT. Commercial pumice and pumicite are siliceous lavas; HARDNESS, 5.5 to 6; SP. GR., about 2.5; lump pumice will float on water, typically weighing about 50 lb. per cu. ft.; color is light gray to white, usually with a silky sheen; it is somewhat brittle, though lumps may be flattened or shaped by rubbing. Pumicite is fine-grained, mostly <200-m. to <325-m., white to light gray in COLOR. A crudely sorted mixture of pumice and ash, used for making building blocks, is known as TRASS.

Uses. Pumicite is used extensively in scouring preparations. Recently both pumice and pumicite have been used increasingly as concrete admixture or aggregate, but in 1937, 68% of domestic sales were for cleansing and scouring compounds, including hand soaps, 2% for other abrasive purposes, 20% for concrete, 5% for acoustical plasters, and 5% for a variety of miscellaneous uses including asphalt filler, road grading, chicken litter, filter aid, building tile, floor-sweeping compounds, and for rock gardens and landscaping. Pumicite has been used to some extent for heat insulation and as a

filler in paints. In concrete, pumicite is not merely an admixture but also a pozzolanic addition (Sec. 3A, Art. 1). The best grades of pulverized imported pumice are used for finishing silverware, watch cases, and other fine metal goods. It is also used as an abrasive or polishing agent in a variety of other industries such as wood finishing, and polishing and beveling plate glass for mirrors. Lump pumice is used for hand rubbing marble and other stone; for rubbing down painted surfaces, automobile bodies, and leather; in lithographing and electroplating; as a toilet article; as a building stone; and heat-insulating brick made of pumice and cement have been manufactured for many years.

Occurrence. Deposits of pumice are always found near centers of volcanic activity. Some deposits are massive and yield large lumps of uncontaminated pumice of uniform structure; others are quite loosely consolidated; still others grade into ordinary hard, dense lava flows. The coarse and fine may be naturally segregated, or the pumice and pumicite may be found in an unsorted mixture. Volcanic ash weathers rather easily to bentonite; hence commercial deposits are generally of recent geologic age, and consequently are most abundant in the United States in the Rocky Mountain and Pacific Coast States; the pumicite deposits in Iowa, Kansas, Nebraska, Oklahoma, and eastern Colorado are wind-blown (*Bul 14 Kan. Geol. Surv.*). The Kansas pumicite deposits, which have been extensively worked, are 16 to 20 ft. thick and lie under about 15 ft. of water-worked sand and a soil overburden. In Italy, high-grade pumice occurs in flat-lying veins or beds accompanied by stony fragments.

Production. Domestic production of pumice and pumicite rose from 15,103 short tons in 1909 to over 70,000 tons in 1936 and 1937. Formerly Nebraska was the only producer but Kansas is now the leading producing state; increasing quantities are being mined in California, Oklahoma, New Mexico, and Oregon. Italy is the leading foreign producer and supplies most of the demand outside of the United States; Germany, New Zealand, Japan, Greece, and probably other countries also have been more or less fairly regular producers; potentially important deposits occur elsewhere. The Italian output, from the island of Lipari, has risen in recent years to 40,000 to 55,000 metric tons a year, of which only 1 or 2% is large first-quality lump (GROSSA), about 10 to 18% small lump (PEZZAME); the remainder is granule (RASSAGLIO) and ash (LAPILLO) grades. About 60 to 70% (4,000 to 6,000 tons a year) of the PEZZAME grade is exported to the United States, chiefly for grinding. The United States also imports up to 200 tons a year of large lump and from 2,000 to 4,000 tons of foreign ground pumice.

Selling. Italian lump and ground pumice are produced in at least 24 different qualities and sizes; the general market grades are: (1) Crude pumice or run-of-mine rock from which only lump pumice has been extracted, (2) lump pumice, ranging from about 1 1/2 to 6 in. across but of any shape, (3) lump pumice, trimmed or cut to shape, and (4) powdered pumice. Specifications are not established; most of the pumicite is powdered by the companies that use it and thus does not come on the market at all. All sizes should be free from grit.

Price of Italian pumice is controlled by competition from other abrasives. For many years lump pumice has ranged from 5 to 7¢ per lb. at New York. The average price of domestic pumice and pumicite, f.o.b. mines, has fluctuated between about $2 and $4.50 per short ton, showing a rising trend due to greater demand and better preparation. Pumice sold for acoustical plaster has been priced around $15 per ton in recent years. Italian-ground pumice ordinarily sells for a little over $25 per short ton, f.o.b. New York, including the $15 duty. This is cheaper than American-ground pumice because pezzame used for the American-ground product costs about $18.50 inclusive of the $2 per ton duty delivered in this country. The quality of the American-ground pumice, however, is superior; it is reported to be as much as three times as efficient an abrasive for certain purposes as pumicite of like grain size. Sharp angular particles are desired for most abrasive uses, but for household cleansers the flattish, striated grains abundant in certain pumicite are preferred because of a more gentle scraping action.

Treatment. In Italy lump pumice generally is smoothed roughly at the mines with files, the best qualities being wrapped in tissue paper and packed in excelsior. Smaller fragments (1/2- to 1 1/2-in.) are bagged. Fines are screened. Material <20-m. is classed as POWDERED PUMICE; that >5-m. as GRINDING ROCK; intermediate sizes are rejected or ground. The roughly screened products are dried and then bolted in hexagonal trommels clothed with wire screens ranging from 35- to 200-m.

At the Long Island City (N. Y.) plant of JAMES H. RHODES Co., pezzame (already freed from obsidian, iron, and other impurities at Lipari) is carefully crushed, screened, dried, and finally bolted through Swiss silk.

Pumicite mined in the Middle West requires little or no crushing. Since it may contain as much as 20% moisture, it goes first to oil-fired rotary driers before passing through a 5-m. revolving screen into air separators. The air-floated product is subsequently mixed with 2% of soap powder for sale as cleanser, while all oversize is rejected. At Fowler, Kans., the material proceeds successively through a pan pulveriser, rotary driers, Hum-mer screens, and a Bates packing machine. The product grades 90% <200-m.; reject from screens is returned to the pan. Further pulverising is accomplished in the driers, the inner compartments of which are square in section (30-in.).

CALIFORNIA QUARRIES CORP., Mono County, Calif., uses dry concentrating tables to remove sand from light, porous pumice which is then screened to desired sizes, oversize being subjected to graded crushing in rolls. Virtually all sizes from 1/4-in. to <60-m. are produced for concrete work, but the main product is used in acoustic plaster and is 8~30-m.; it is dried and packed in 80-lb. burlap sacks.

33. PYROPHYLLITE

Properties. Pyrophyllite resembles talc (Art. 43) but instead of being a magnesium silicate it is an aluminum silicate, $H_2Al_2(SiO_3)_4$; it differs from kaolin in atomic structure and by containing less SiO_2. HARDNESS is 1.5; SP. GR. 2.8. Compact varieties suitable for carving are included with steatite or pinite under the name AGALMATOLITE.

Uses. Shaped, for tombstones and crayons; ground in ceramics, especially wall tile; as a filler in paper, rubber, battery box spacers, cotton cordage and textiles, roofing, soap, cosmetics, asbestos products, pipe-covering compounds, insecticides and sheet asphalt.

Occurrence. Formed by alteration of tuffs and breccias, chiefly acidic, by heat and reactions associated with granitic intrusions. In North Carolina some lenses are 500 ft. thick and are relatively free from associated minerals. Deposits in Newfoundland and western Canada are mixed with quartz. All deposits grade into sericitic alteration, and contain more or less quartz, sericite, graphite, chlorite, andalusite, and iron minerals which are rejected so far as possible by selective mining.

Production. No regular production has been reported except in North Carolina, where deposits have been worked in some fashion almost uninterruptedly for 80 years. Statistics have been included with those of talc because one company was responsible for most of the output, but by 1937 there were 4 or 5 companies in the field.

Selling. Ground pyrophyllite, <200-m., is sold in 80- and 100-lb. paper bags, priced in recent years at $7 to $9 per short ton, f.o.b. North Carolina shipping points.

Treatment comprises hand sorting and dry grinding. At PYROPHYLLITE TALC PRODUCTS, Glendon, N. C. (built 1937), pyrophyllite, hand-sorted by color, is sent to a Sturtevant crusher and then through a Raymond 3-roller mill in closed circuit with an air classifier. At the new plant of UNITED FELDSPAR & MINERALS Co., Staley, N. C. (*144 #4 J 71*), air-swept 8-ft. Hardinge pebble mills in closed-circuit with 14-ft. Gayco air-separators are used; a series of separate raw-material bins is provided to permit blending for uniformity, and for making special blends. Each order is ground as a separate lot with different settings of the classifier according to size specifications ranging from 80 to 325 *mog.*

34. QUARTZ, SILICA, AND SPECIAL SANDS

Properties and uses. Silica (SiO_2) occurs naturally in macrocrystalline (quartz, tridymite, and cristobalite), microcrystalline (chalcedony), and cryptocrystalline (opal, diatomite) forms. Clear, colorless quartz (ROCK CRYSTAL) is used, when flawless, for optical and radio (piezoelectric) purposes. Smoky quartz or CAIRNGORM (brown in thin section) owes its color to organic matter, removable by heat. Variously colored crystals are gemstones (amethyst, aventurine, citrine, etc.); rose quartz has been carved for ornaments. CRYSTALLIZATION, hexagonal; HARDNESS, 7; SP. GR., 2.65; NO CLEAVAGE; FRACTURE conchoidal. Any form of silica used in ceramic bodies may be called FLINT, but true flint is chalcedonic; it is typically light to dark gray in COLOR, extremely hard, and possesses a prominent conchoidal FRACTURE, SP. GR. 2.55 to 2.64. Rounded flint pebbles are used as grinding media, are crushed and graded for use as abrasives, and are ground for potters' use. Carnelian, jasper, and sardonyx are forms of chalcedony. Agate, used for balance and instrument bearings and for ornaments, is semiprecious flint; CHERT is impure flint, often calcareous. Opaline (cryptocrystalline silica) contains 2 to 13% combined water. HARDNESS, 5.5 to 6.5; SP. GR., 1.9 to 2.3; LUSTER, resinous to pearly. Precious opal is the most valuable variety. GEYSERITE (siliceous sinter), deposited near hot springs, is a form of common opal.

In general, the classification of uses by size is more important than chemical composition; uses are summarized below on this basis.

Dimension stone: Rough block, cut stone, rubble, paving blocks, and flagging; furnace block (much so-called MICA SCHIST, used for refractory-furnace linings, comes in this category); silex or quartzite tube-mill lining blocks and grinding pebbles or cubes; grindstones, pulpstones, whetstones, scythestones, etc.

Broken or crushed stone: Acid-tower lumps (2- to 8-in.), ferrosilicon manufacture (1- to 3-in.), concrete aggregate, fluxing quartz or stone (or siliceous ores), ganister, rough agate. See Art. 41 for general methods.

Pebbles: Natural flint grinding pebbles (1- to 6-in.) for tube mills (Sec. 5, Art. 6).

Chips and granules: BIRDSTONE or coarse placing sand for potters, roofing granules, stucco and terrazzo; building, paving, and railroad gravel.

Sand: Sand-blasting, glass-grinding, and miscellaneous abrasives, wire-saw and stone-cutting sands, ganister (silica brick), fire or furnace (refractory) sand, glass sand (similar grades used for making sodium silicate and silicon carbide), paving sand, roofing sand, asphaltic sand, bed sand, concrete sand, brick-mortar sand, plastering sand, molding sands, core sands, filter sand, engine sand, and lime-brick sand.

Powder: Plaster and cement filler, asphalt filler, paint and wood filler; potters' flint, rubber filler, miscellaneous filler; silica wash for steel-foundry molds; parting sand; cleaning, polishing, and scouring compounds.

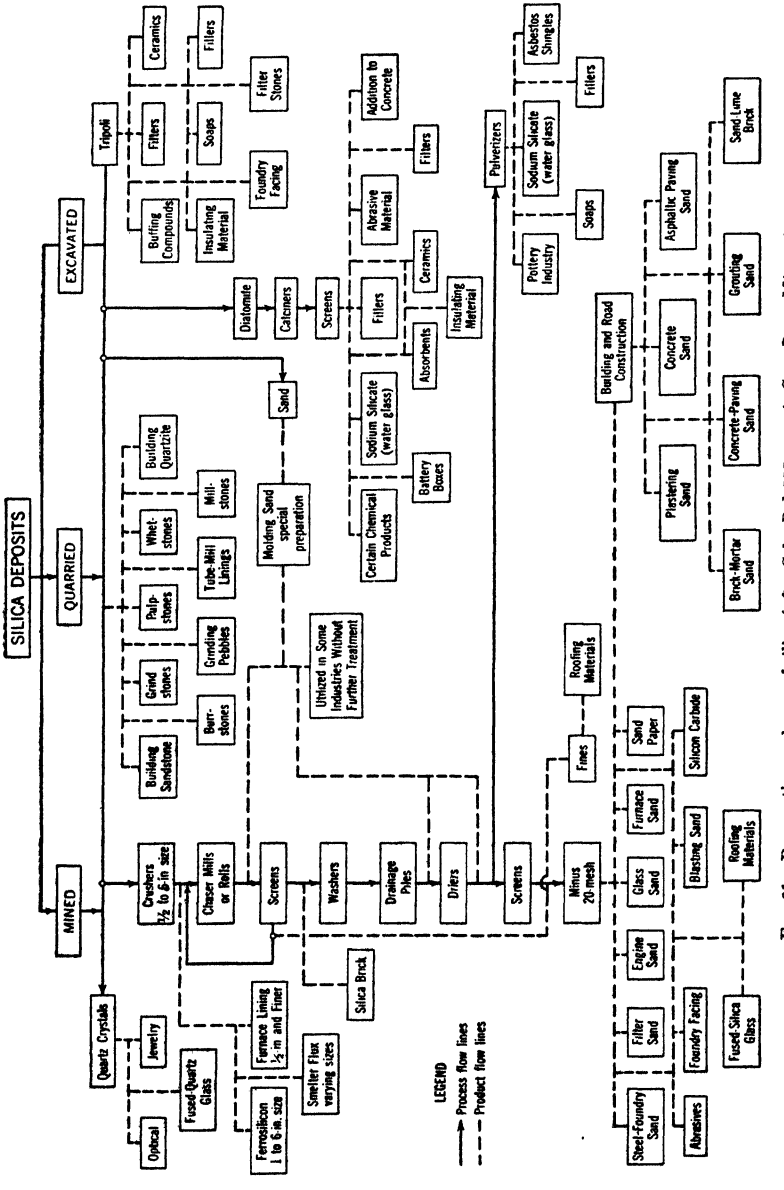

FIG. 61. Preparation and uses of silica (*after Cole, Bul 655, part 1, Can. Dept. Mines*).

Occurrence. Quartz is the commonest mineral, next to the feldspar group, yet flawless rock crystal is rare. Enormous crystals are often found in pegmatites, but they are likely to be distorted or strained even when not visibly intergrown; included gases and solid impurities are likely to be visible under the microscope. Double-pointed crystals are found in soft sedimentary rocks but are mostly small. In Brazil the crystals occur in

veins in clay and more or less bedded rocks; they were developed slowly from infiltrated SiO_2 at hot-water temperatures. The yield of crystals is small at most operations. Usually the crystal zone is overlain or intermingled with DOG-TOOTH material comprising partly formed crystals of no value. Gemstones are mostly found in geodes; QUARTZITES are metamorphosed sandstones. FOSSILIZED WOOD is a variety of agate and relatively rare. Flint pebbles are formed in chalk from the siliceous remains of minute marine organisms. Vein quartz is likely to be impure and other sources are more readily worked. Quartz forms the bulk of sands and sandstones.

Production. World supplies of optical and radio crystals have come principally from Brazil; Madagascar has shipped a little, and occasional finds are reported elsewhere. Brazilian exports have ranged as high as 231 metric tons (1935) but about 70% of this was fusing quartz shipped to Japan and worth only 5¢ per kg., whereas crystals which are shipped to the United States and yield a reasonable proportion of usable optical or piezoelectrical material were worth on the average $3.17 per kg. Shipments of really high-grade crystals rose to 15 tons in 1929 but subsequently averaged only 5 tons per year. These large crystals often travel 1,100 mi. on muleback and as far again by train to port. Included in the Brazilian shipments are certain quantities of yellow crystals or false topaz. Madagascar's output was 128 tons in 1929, 1 ton in 1932, and 16 tons in 1933; of this only a small fraction was high-grade quartz. Agate for laboratory mortars and instrument bearings has come mainly from the Brazilian-Uruguayan frontier, fabricated or shaped in Germany.

Domestic production statistics for quartz include those for sand and gravel, sandstone, quartzite, and many other items; separate figures, available for quartz from pegmatites, veins, or quartzite, show production in the United States in 1937 of 13,012 short tons, of which 3,252 tons was sold crude, 5,891 tons was crushed, and 3,869 tons was ground by the producer. Ground sand and sandstone sales in 1937 were 328,156 tons valued at $1,996,528. For figures for other silica products see Arts. 1 and 38.

Selling. In 1937 crude quartz sold or used by producers was valued at $3.10, roughly crushed at $4.18, and ground at $8.09 per ton f.o.b. shipping point. Average sales value for ground sand and sandstone in 1937 was $6.02; nearly half the sales for pottery and other ceramic uses, comprising nearly half of the total, averaged $6.94 per ton. Quartz rock or sand may be priced as low as 50¢ to $1 per ton. Pulverized silica competes with tripoli and other SOFT SILICAS, ranging from $6 to $35 per ton, the latter price being for a high-quality air-floated grade in car lots. Carefully sized and graded grains for lithographic use fetch higher prices, good rock crystal sells for a minimum of around $2 per lb., fusing-quartz crystals may bring as much as 80¢ per lb. (>1/4-in. sizes).

Glass sand, potter's flint, and the classes of ground quartz or sand used in ceramic industries are valued for their SiO_2 content and for freedom from iron, titanium, and other impurities that stain the product. Chemical purity is less important for some other uses, even where the product is to be melted, as in metallurgical quartz, but is even more important in the case of fusing quartz or sand for making fused silica ware, for which purpose physical structure also may be important, particularly if optical properties and an especially good appearance are desired. Purity, however, has to be considered in respect to quartz for lining acid towers or for making sodium silicate and silicon carbide; indirectly, too, it may affect refractoriness of ganister (for brick), molding sand (especially steel-molding sand); or again it may indicate substances that unfit sand for general industrial uses, although specification is merely for a reasonably clean, hard, tough material.

Piezoelectric crystals must not only be untwinned but also must be free from flaws, cracks, bubbles, inclusions, veils, or other defects. They should not be unduly clouded and preferably should possess at least two natural faces to permit the mass to be orientated crystallographically. Although size limits are not rigid, those weighing 1 to 10 lb. are preferred. American instrument makers pay $3 to $15 per lb. for rough crystals and recover only about 5% as finished plates.

Treatment varies according to character of crude and size and nature of product. Outlines of treatments for various products are given in Fig. 61. Flowsheets for special sand plants are shown in Figs. 62 to 63.

Decker's Creek Sand Co., Fig. 62 (*34 #2 PQ 45*).

Location: Greer, W. Va.
Capacity: 50 t.p.h.
Crude: High-silica loose sandstone.
Products: Glass sand, traction sand, blast sand, building sand, filter sand.
Water: From creek against 600 ft. vertical head by 4-stage centrifugal pump; consumption about 1,400 g.p.m.

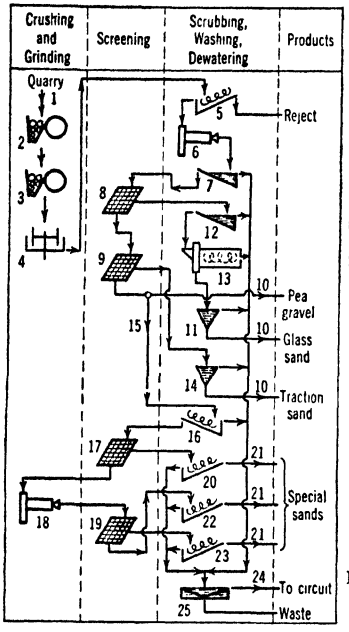

Legend for Fig. 62:

1. 5 @ 4-ton dump trucks, about 1/2 mi.
2. 1 @ 28×36-in. Traylor jaw crusher.
3. 1 @ 12×20-in. jaw crusher.
4. 1 @ 9-ft. Lewiston wet pan.
5. 2 @ 30-in.×12-ft. Lewiston screw washers.
6. 1 @ 5×10-ft. Marcy rod mill with light rod load, used as a scrubber.
7. 2 @ 48-in.×20-ft. Akins simplex classifiers with 6-ft. boil sections (perforated plates (1/2-in. apertures) under sand side at about mid-length), 18-lb. water.
8. 2 sets of 2 @ 4×5-ft. Hum-mer screens in tandem, 20-m. Monel-wire cloth.
9. Trommel, 10-m. aperture.
10. Stockpile by flume.
11. 2 @ 6-ft. Allen cones.
12. 1 @ 54-in.×20-ft. Akins simplex classifier.
13. 1 @ 4×10-ft. Hardinge spiral classifier.
14. 1 @ 6-ft. Allen cone.
15. As needed for special sands on order.
16. 2 @ 20-in. Lewiston screw washers.
17. 2 @ 4×5-ft. Hum-mer screens.
18. 1 @ 4×8-ft. Hardinge rod mill.
19. As (17).
20. 1 @ 30-in. Lewiston screw dewaterer.
21. Stockpile.
22. As (20).
23. As (20).
24. 1 @ 1,200-g.p.m. centrifugal pump, 125-ft. vertical lift.
25. 1 @ 85-ft. traction thickener.

FIG. 62. DECKER'S CREEK SAND CO.

Summary. Disintegration by jaw crusher; pan and rod mills, followed by washing and screening of washed sands to specification sizes; rewashing of sized special sands.

Central Silica Co., Fig. 63 (*44 #9 RP 41*).

Location: Glass Rock, Ohio.
Capacity: 1,600 tons per 24 hr.
Crude: 99.9%+ SiO_2 grains (about 50-m.), cemented by loam and clay; about 0.05% Fe_2O_3.
Products: See items 15, 17, 21, and 22 of *Legend;* dust-collector dust (<400-m.) is sold for soaps and scouring powders.
Water consumption: 1,800 g.p.m.

Legend for Fig. 63:

1. 1 3/4-cyd. shovel; 7-ton trucks.
2. 1 @ 24×36-in. jaw crusher, 3-in. open setting.
3. 30-in. belt conveyor; 1 @ 500-ton and 1 @ 700-ton concrete-stave storage silos.
4. 2 Lewiston wet pans, 5/16-in. punched apertures in hardened-steel bottom plate, 30-in. tires, 15 r.p.m.; operated with about 4-in. layer.
5. 4 revolving screens, 10-m. aperture.
6. 2 @ 16-ft. spiral disk washers.
7. 2 as (6).
8. 2 as (6).
9. 2 as (6).
10. Deister shaking tables.
11. About 0.04% Fe_2O_3; drained to about 6% moisture; dried on steam driers (200-lb. p.s.i.); vibrating feeder.
12. Acid leach and wash.
13. Conveyor; drain bin; drier (140° F.).

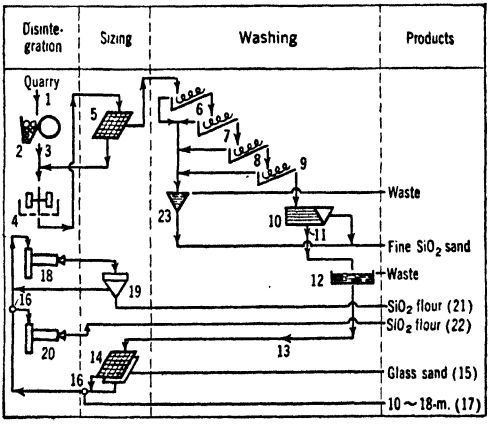

FIG. 63. CENTRAL SILICA CO.

Legend for Fig. 63—Continued:

14. Deister-Multirap screens, 18- and 20-m. cloth.
15. 100% <20-m., 40% >50-m., 70% >70-m., 96% >100-m.; 0.01% Fe_2O_3.
16. Alternative.
17. Sand-blast sand, etc.
18. 1 @ 8×22-ft. pebble mill, flint-block lining.
19. 1 @ 12-ft. Sturtevant rubber-lined air classifier.
20. 1 @ 8-ft. Hardinge air-swept mill.
21. <200-m. for pottery.
22. <140-m. for foundry use.
23. Deslimer.

Summary. Friable sandstone disintegrated by wet-panning; washed repeatedly to remove clay and loam; tabled and acid-leached to remove Fe_2O_3; sized for glass sand; dry-ground with air classification for silica flours.

P. J. Weisel, Inc., Fig. 64 (*IC 6937*).

Location: Corona, Calif.
Capacity: 17.5 t.p.h.
Crude: Coarse sand embedded in clay. Sizing analysis: 1/2~1/4-in., 8%; 1/4-in.~200-m., 62%; <200-m. (clay and fine sand), 30%. Sand and small pebbles almost wholly SiO_2.
Products: Glass sand: 30~200-m.; SiO_2, 94.5 to 96%; Al_2O_3, 2.5 to 3.5%; K_2O, Na_2O, etc., 1.8 to 2.3%; Fe_2O_3, 0.03 to 0.04%. Blast sand, 6~14-m.
Cost is about $2 per ton of finished sand, including 35¢ for storage, trucking, and car-loading.

Legend for Fig. 64:

1. 3/4-cyd. power scraper.
2. Pit grizzly, 90-lb. rail, 20 ft. long, 12-in. spacing, +10° slope; material dragged up by pit scraper; oversize sledged through.
3. Loading hopper; 1 @ 24-in.×250-ft. belt conveyor, 33% slope, 190 f.p.m.
4. 1 @ 4×12-ft. squirrel-cage grizzly, made of old 1 1/2-in. pump rods welded to spider rings, 4-in. clear aperture.
5. 1 @ 10×10-ft. hopper; 1 @ 12-in.×6-ft. screw feeder.
6. 1 @ 4×5-ft. revolving scrubber; slope 1 1/2 i.p.f., with longitudinal lifters and a low retaining ring; about 150 g.p.m. of water added.
7. 1 @ 4×11-ft. trommel on same shaft as (6), 1/2-in. round holes; oversize a negligible quantity of clay lumps.
8. 1 @ 16-in.×10-ft. single-screw washer, 18° slope, 18 r.p.m.
9. 1 @ 7-ft. cone.
10. 1 @ 16-ft. spiral-rake thickener, 4 2/3 m.p.r.
11. 1 @ 26-in.×12-ft. log-type scrubber (see Sec. 10, Art. 4), 65 r.p.m.; no overflow.
12. 1 @ 3×6-ft. 2-deck mechanical vibrating screen, 30° slope, 6- and 14-m. apertures.
13. 1 @ 6×18-ft. tube mill, silex lined (about 5×15-ft. inside), charged with 23,000 lb. 3- and 4-in. Danish pebble; 60% solids.
14. 1 @ 2×16-ft. rake classifier, 32 s.p.m.
15. 1 @ 18-in.×16-ft. drag belt, 10° slope, 48 f.p.m.
16. 1 @ 6×6×12-in.×26-ft. belt-bucket elevator, 250 f.p.m.
17. 1 @ 3×16-ft. rake classifier.
18. 1 @ 8-ft. and 1 @ 10-ft. as (11) in parallel.
19. 1 @ 3-way revolving distributor.

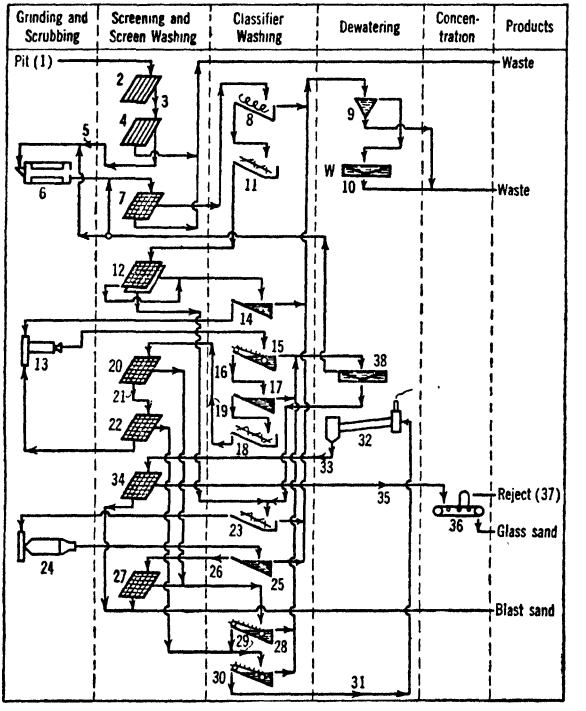

20. 3 @ 3×6-ft. vibrating screens in parallel, 30-m. brass cloth.
21. 1 @ 6×6×9-in.×20-ft. belt-bucket elevator, 250 f.p.m., wood housing.
22. 2 @ 3×6-ft. Hum-mer screens, 30-m. cloth.
23. 1 as (11).
24. 1 @ 8-ft. double-cone grinding mill, silex lined, run without tumbling charge.
25. 1 as (17).
26. 1 @ 6×6×9-in.×36-ft. belt-bucket elevator, 250 f.p.m.

FIG. 64. P. J. WEISEL, INC.

Legend for Fig. 64—Continued:

27. 1 @ 3×6-ft. unbalanced-pulley type vibrating screen, 600 v.p.m., 30-m. cloth.

28. 1 @ 18-in.×14-ft. drag belt.

29. 1 as (21).

30. 1 @ 24-in.×14-ft. drag belt.

31. Drainage bin; scraper; 9-in.×9-ft. screw conveyor; 1 as (21); 1 @ 12-in.×30-ft. belt conveyor.

32. 1 @ 6×20-ft. direct-indirect rotary drier; dries 6 t.p.h. from 8 or 10% moisture to dryness with consumption of 33 cu. ft. per min. of natural gas.

33. 1 @ 5×5×5-in.×30-ft. chain-bucket elevator, sheet-steel housing.

34. 1 @ 3×6-ft. Hum-mer screen, 16-m. aperture, for skimming trash.

35. Air box in which sand is dropped in a sheet across a current of air for cooling and de-dusting. Dust is about 15% >80-m., 40% >100-m., mostly mica.

36. Induction-type magnetic separator.

37. 70% >60-m., mostly mica, garnet, dark silicates, and metallic ores.

38. 1 @ 10-ft. spiral-rake thickener, 3 1/2 r.p.m.

Summary. Natural sand scrubbed, washed, and sized at 1/2-in. and oversize rejected; undersize rescrubbed, washed, and a 6~14-m. blast sand cut out; remainder is classified, ground through 30-m. in closed circuit, is deslimed, joined with the natural washed <30-m. material, dried, de-dusted, and run over a magnetic separator for finished glass sand.

At WHITEHEAD BROS. Co., Dividing Creek, N. J., foundry-sand plant (*46 #2 RP 52*) crude sand is scalped at 14-m.; undersize is deslimed in a hydro-bowl classifier and then classified into 8 sizes in a Fahrenwald sizer; classifier sands are dewatered in rake classifiers; all overflows are thickened and the thickened product classified in a rake classifier; all products are dried in an oil-fired rotary drier.

35. REFRACTORIES

Properties. Furnace linings and other refractory products are designed primarily to withstand high temperatures. No material showing obvious fusion after being heated slowly to 2,750° F. can be called a refractory. Other desirable attributes are resistance to slagging (chemical action), abrasion (physical wear), and spalling (thermal shock). The ideal refractory also should have the strength to resist either the pressure from a heavy load of molten metal in a furnace or the complex stresses in roof structures, and also be a poor conductor of heat and electricity. No one substance possesses all these virtues; hence a variety of materials are commercially employed. According to chemical composition they are of three classes, *viz.*, acid, neutral, and basic. Another division is between (1) hewn or cut blocks, (2) brick and other molded shapes, (3) mortars, and (4) crushed or granular materials applied

Table 17. Properties of refractory raw materials

Material	Approximate formula	Melting point, °F.		Density	Hardness (Mohs)	Commercial sources
		Pure	Commercial			
Alumina:						
Bauxite	$Al_2O_3 \cdot 2H_2O$	3,722	3,272 to 3,668	2.0 to 2.6	1 to 3	Imported; Ark.
Diaspore	$Al_2O_3 \cdot H_2O$	3,722	3,200 to 3,632	3.4 to 3.6	6.5 to 7.0	Mo.
Corundum	Al_2O_3	3,722	3,362 to 3,686	4.0 to 4.1	9	Electric furnace
Baddeleyite	ZrO_2	4,892	2,363 to 4,505	5.5 to 6.0	6.5	Brazil
Beryllia	BeO	4,352	4,352	.....	.....	Rare
Chromite	$FeO \cdot Cr_2O_3$	3,956	3,200 to 3,722	4.3 to 4.6	5.5	Mainly imported
Clays:						
Kaolin	.....	3,245	3,164 to 3,245	2.62	2	Pa., Ga., Ala., Md.
Fire clay, high-grade	.....	.....	3,020 to 2,173	2.62	2	Ohio, Pa., Mo., etc.
Fire clay, low-grade	.....	.....	2,912 to 3,002	2.62	2	
Cristobalite	SiO_2	3,110	3,092	2.33	.....	See *Quartz*
Graphite	C	Infus.	Infusible	2.1 to 2.2	1 to 2	Mainly imported
Limestone	$CaO \cdot CO_2$	4,661	3,803 to 4,504	2.4 to 2.8	3	Common
Dolomite	$CaO \cdot MgO \cdot 2CO_2$	.....	3,497 to 4,505	2.5 to 3.0	3.5 to 4.0	Common
Magnesite	$MgO \cdot CO_2$	5,072	3,425 to 5,072	3.0 to 3.1	3.5 to 4.5	Wash., Calif., imported
Periclase	MgO	5,072	3,425 to 5,072	3.7 to 3.9	6	Rare (also artificial)
Spinel	$MgO \cdot Al_2O_3$	3,875	3,079 to 3,812	3.5 to 4.5	7.5	Synthetic
Quartz	SiO_2	See cristobalite		2.65	7	Pa., Ohio, Ala., Calif., etc.
Diatomite	SiO_2	.....	2,939	0.5 to 1.2 *a*	2.1 *a*	Calif., Nev., etc.
Sillimanite	$Al_2O_3 \cdot SiO_2$	3,290	3,290	3.2	6 to 7	British India
Kyanite	$Al_2O_3 \cdot SiO_2$	3,290	3,290	3.6 to 3.7	5 to 7.5	N.C., Va., Calif., Wyo.
Mullite	$3Al_2O_3 \cdot 2SiO_2$	3,290	3,290	3.0	6 to 6.5	Synthetic
Rutile	TiO_2	3,344	2,966	4.2 to 5.2	6 to 6.5	Va., Brasil, etc.
Thoria	ThO_2	5,522	5,522	10	.....	Electric furnace
Yttria	Y_2O_3	4,370	4,370	5	.....	Electric furnace
Zircon	$ZrO_2 \cdot SiO_2$	4,622	2,452 to 4,172	4.7	7.5	Australia, Brasil, etc.

a Apparent; true density and hardness much higher.

as loose aggregates to be rammed into place with or without binder. Quartzite (MICA SCHIST), diatomite, olivine, and soapstone are almost the only substances marketed as refractory blocks shaped from natural stone, and these are relatively minor items in the industry as a whole. About 60% of all refractory brick are fire-clay brick, 30% are silica (GANISTER) brick, and of the remaining 10%, over half are chrome and/or magnesite brick. Minor materials include carbon, kyanite, fused mullite, zircon, spinel, carborundum, olivine, bone ash, and oxides of aluminum, titanium, zirconium, beryllium, thorium, yttrium, etc. Metals also might be included; protected by cooling water, they are widely used for boilers, jackets, tuyères, cooling plates of blast furnaces and steam power plants. Important properties of various raw refractory materials are given in Table 17. Properties of refractory brick are given in Table 18.

Table 18. Refractory brick *a*

	Kind	Raw material	Melting point		Firing temperature	
			Seger cone	°C.	Seger cone	°C.
1	Silica	Quartzite	32 to 34	1,700 to 1,750	14 to 18	1,400 to 1,500
2	Fire clay	Clay	26 to 35	1,600 to 1,770	10 to 16	1,300 to 1,450
3	Mullite	Kyanite	Above 36	Above 1,800	14 to 18	1,400 to 1,500
4	High alumina	Bauxite-corundum	" 36	" 1,800	14 to 18	1,400 to 1,500
5	Magnesite	Magnesite	" 42	" 2,000	16 to 20	1,450 to 1,550
6	Chrome	Chromite	" 42	" 2,000	14 to 18	1,400 to 1,500
7	Chrome-magnesite	Magnesite-chromite	" 42	" 2,000	16 to 26	1,450 to 1,600
8	Spinel	$RO \cdot R_2O_3$	" 36	" 1,800	Above 16	Above 1,450
9	Zirconium	Zirconium ores	" 42	" 2,000	" 14	" 1,400
10	Carbon	Coke	" 42	" 2,000	.....	Approx. 1,000
11	Silicon-carbide	Carborundum	" 42	" 2,000	12 to 16	1,350 to 1,450
12	Nitrides, etc	.....	" 42	" 2,000	?	?

a At 400 to 500° C. CO reduces Fe_2O_3 and deposits C in the interior of the brick with harmful effect. Alternately reducing and oxidizing atmosphere has a harmful effect on chrome ore products over 1,000° C. SiC is destroyed by oxidizing atmospheres over 1,300° C. Gaseous alkalies reduce refractoriness.

Uses. The iron and steel industry probably uses 50% of the total sales of refractories, public utilities 20%, nonferrous smelting 6%, cement and lime plants 5%, glass plants 5%, oil refineries 4%, ceramic and miscellaneous 10%.

Production. Germany, Belgium, Great Britain, France, Italy, and other industrial countries are large producers of refractories, although the United States probably produces most. About one-third of the clay firebrick, almost three-fourths of the silica brick, and much of the chrome and magnesite shapes are manufactured in Pennsylvania, Missouri, Ohio, and Kentucky. They normally rank in the order named. The industry is represented in at least 33 states, but these four account for roughly 80% of the domestic total. Production quantities are given in Table 19.

Table 19. Domestic production of specified refractory products *a*

Kind	1925–29, average		1937	
	Quantity	Value, thousands of dollars	Quantity	Value, thousands of dollars
Clay products, thousands:				
Brick, block, or firebox tile (9-in. equivalent)	931,481	$36,947	710,757	$33,731
High-alumina brick (over 40% Al_2O_3)	12,637	1,211	27,459	2,134
Special fire-clay, shapes, tons	115,870 *b*	2,756 *b*	295,624	7,598
Glasshouse tank blocks, pots, tons	37,534 *c*	2,193 *c*	38,981	3,287
Refractory cement (clay), tons	46,322 *b*	1,299 *b*	57,927	2,468
Clay sold raw or prepared, tons	518,351	2,738	394,084	1,682
Other clay products, tons	*e*	5,004 *d*	*e*	5,215
Silica brick, thousands	256,818	13,001	198,156	11,713
Magnesite and chrome brick, thousands	14,864	4,433	22,758	6,727
Graphite crucibles, etc., tons	*e*	2,336 *f*	*e*	2,235
Refractory cement (nonclay), tons	64,255 *b*	1,337 *b*	114,718	2,275
Others, including alumina and silicon carbide refractories, tons	*e*	5,257	*e*	8,107

a Compiled from U. S. Bureau of the Census reports.
b Four-year average.
c Three-year average.
d Includes some duplication.
e Data not available.
f Average 1925, 1927, and 1929.

Selling. Refractory-product sales are more sensitive even than the metallurgical industries to an oncoming recession and do not pick up again until well along in the ensuing recovery. Nevertheless, prices of standard refractory materials are altered only infrequently. Until 1929 the trend was gradually upward, owing in part to depletion of certain easily accessible deposits of fire clay and other materials, and in part to improvements in quality and more exacting service requirements. Price quotations for brick are for standard 9-in. brick; other sizes and shapes are subject to extras ranging from a small advance for wedges or keys to a substantial differential on soaps and splits, and still higher extras on little-used special shapes. First-quality firebrick, after being quoted f.o.b. plant (Central Pennsylvania, Ohio, or Kentucky) at $43 to $46 per M for several years dropped to $35 in 1932, recovered to $45, and in 1937 rose to $54. Since a thousand firebricks weigh around 3 1/2 tons, prices at eastern steel works run $7 to $10 higher owing to freight. Second-quality firebricks are nominally $5 cheaper than first-quality, and silica bricks tend to cost the same as first-quality fire-clay brick in the East, higher in the West. Kyanite bricks range from 45¢ to $1 each and zirconium bricks have sold at $1.10 each. Fused Al_2O_3, SiC, and MgO bricks all sell around $1 each; extra high (80%) Al_2O_3 bricks, over 25¢ ($260 per M).

Treatment. Firebrick is usually made from a mixture of refractory raw clay, burned flint clay, and raw refractory plastic clay. The flint clay usually makes up the bulk of the

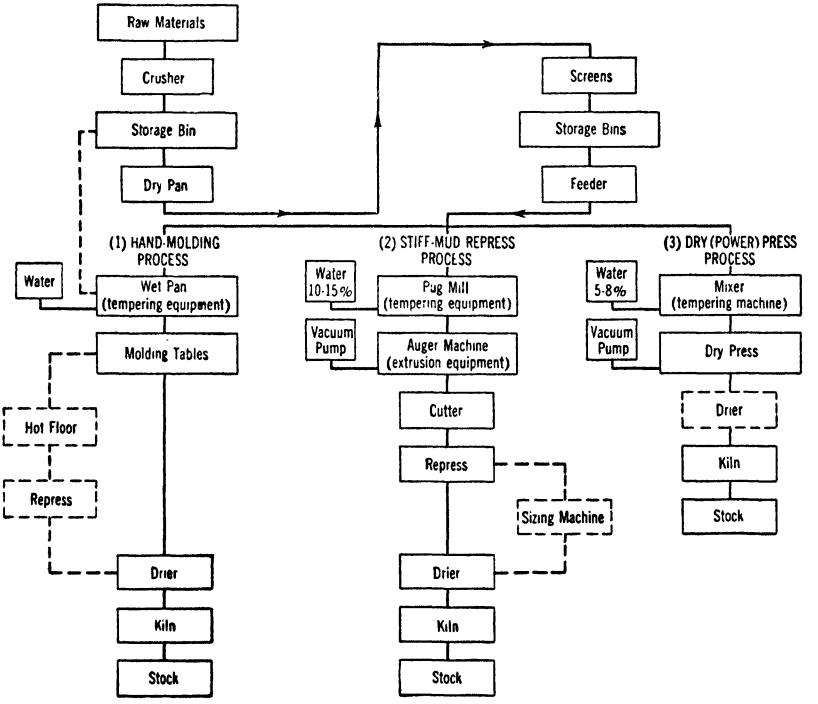

FIG. 65. Methods of manufacturing fire-clay brick (*IMR 624*).

mixture, and since it shrinks on firing, usually has to be precalcined. Mixed sizes are better; fine material alone is unsatisfactory for brick making. The term GROG means any calcined, broken, or ground products (including old firebrick, glass pots, and other manufacturing waste) used to reduce firing shrinkage. Fig. 65 shows three methods of manufacture: Hand molding, stiff-mud repressing, and dry pressing. Dry-pressed bricks are somewhat cheaper to manufacture than stiff-mud; being formed under pressures of 1,000 to 4,000 lb. per sq. in., they have virtually no drying shrinkage. Fire-clay bricks made by stiff-mud repress method are typically harder, tougher, and denser than dry-pressed bricks. Bricks made by any of the three processes are fired in tunnel or periodic kilns, the former being more economical for large, steady production. Maximum temperatures range from 2,300° to 2,500° F. according to materials and properties desired.

Silica bricks are made from crushed quartzite mixed with 2% CaO and H_2O. Owing to sudden expansion changes during firing, they must be handled carefully. They are burned in periodic kilns

at about 2,700° to 2,750° F. The dry process can make larger shapes than machine molding, but the bulk of the output is hand molded.

Magnesite brick is made from grain (DEAD-BURNED) magnesite (Art. 25), and chrome brick from crushed raw or calcined chrome ore (Sec. 2, Art. 11). They are burned at high (say, 2,700° F.) temperatures. In periodic kilns, half the space is lost because individual magnesite brick has to be surrounded by already-burned silica brick so each will have to support only its own weight. Both chrome and magnesite brick and other shapes are made in increasing quantities without firing. Owing to careful grain sizing and high forming pressures, unburned bricks are denser, heavier, and shrink less in service, though not quite so strong. Unburned chrome brick may contain 20% dead-burned magnesite. At least one domestic manufacturer melts synthetic $Al_2O_3 \cdot SiO_2$ mixtures in electric furnace and casts the product in suitable molds.

36. SALINES (GENERAL)

Description and uses. In addition to common salt, potash, borates, and nitrates, other soluble salts are recovered directly from natural brines, playas, marsh, or bedded deposits. Most important of these are sodium sulphate (used in Kraft paper, stock medicines, glass, dyeing, etc.); trona and other sodium carbonates (one of the most useful industrial chemicals); and epsom salts and other magnesium compounds (used in various industries as well as in medicine).

Occurrence. Natural salts constitute only a small percentage of the total production of sodium sulphates and carbonates, the latter especially being made chiefly in chemical plants using NaCl, but the treatment of brines and saltworks bitterns has become the principal source of magnesium salts, calcium chloride, and bromine; and iodine is produced to a considerable extent from oil-well brines. Imported sodium sulphate is made from waste $MgSO_4$ from the German (Stassfurt) potash industry. Brine wells are important sources of salines. In several Western States, sodium carbonates and/or sulphates occur naturally in considerable quantities in marshes and dried ponds, but the chief sources are the brines of alkali lakes, especially Owens Lake and Searles Lake; reefs of trona; and more or less bedded deposits (often overlain with clay). The largest mineral deposit in the world is the ocean, which contains a variety of useful elements.

Production. In 1937 record quantities of natural sodium compounds were recovered in the United States: 104,711 tons of carbonates valued at $1,191,485, and 80,053 tons of salt cake and Glauber's salt worth $599,266. The total quantity of natural magnesium salts (chiefly $MgSO_4$ and $MgCl_2$, but including some hydroxide and oxide and excluding large quantities of $MgCl_2$ used in manufacture of metallic Mg) produced from brine wells and sea water and sold or used in 1937 aggregated 64,777 tons valued at $1,578,527; domestic output of bromine was 13,100 tons valued at $5,180,177; of iodine, 299,286 lb. valued at $242,422 (imports, 1,967,148 lb.); and the calcium-magnesium chloride from natural brines amounted to 101,547 short tons worth $1,295,403. Foreign countries producing miscellaneous salines include Chile, Germany, U.S.S.R., Japan, Italy, Palestine, and in fact most salt-producing countries.

Selling. Since arid regions are rarely populous, markets for most salines are remote from the deposits and often can be supplied more advantageously by chemical works or imports; freight charges ordinarily limit the market radius. The average price of natural sodium carbonates fell from $20.30 per short ton in 1926 to below $11 in 1936, f.o.b. domestic plants in the West, compared with typical New York quotations of around $25. For sodium sulphate the price has been steadier, averaging around $7 for the natural western product compared with $13 to $15 in New York. High-grade magnesium carbonate (technical), made from eastern dolomite, is typically around 6¢ per lb. but the California seawater products range in price from $40 to $100 per ton, f.o.b. plant, and an increasing proportion is converted into dead-burned magnesite selling for $25; $MgCl_2 \cdot 4H_2O$ is worth on the average about $10 per ton and $MgSO_4 \cdot 7H_2O$ around $28 per ton f.o.b. plant (1938). Calcium chloride averages well under $20 per ton, although flake chloride in late years has usually cost consumers at least $23 delivered; liquid $CaCl_2$ (40 to 45%) is quoted (1935–38) around $7.50 f.o.b. works. The Br content of ethylene tetrabromide has been valued by producers during the 1930's around 20¢ per lb., although quoted nominally at 30¢ or more. Crude iodine, pegged by Chilean producers for many years at $3.89 per lb., New York, was reduced by 1937 to around 90¢, owing to American competition.

Treatment. Recovery of Mg compounds, Br, I, $CaCl_2$, etc., from bitterns, sea water, or artificial brines involves complicated chemical procedures, in addition to evaporation and crystallization. Solid-salt crudes are treated by usual ore-dressing procedures, employing a saturated solution of the salts for circuit liquor. Mud is readily removed in log washers; tabling and froth flotation are accomplished satisfactorily in such solutions without further solution of soluble minerals. Sodium sulphate has been freed from mud purely mechanically and shipped in its natural state. In other places it has been leached in place or in vats, the warm, saturated solution being cooled later to precipitate Glauber's salt ($Na_2SO_4 \cdot 10H_2O$).

At Casper, Wyo., two ponds are used, brine being pumped from one pond to the other in order to recover each new crop of crystals. At Great Salt Lake, crude Glauber's-salt shales, lying under sand or precipitated by winter temperatures, is scooped by dragline into cars and hauled to plant. Refining consists in crushing, dissolving the salt, eliminating sand by classifiers, settling the solution, and evaporating to deposit either crystals or anhydrous salt cake (*139 #6 J 55*). At Wabuska, Nev., however, natural temperatures were high enough in the dry season to yield thenardite (anhydrous Na_2SO_4) instead of $Na_2SO_4 \cdot 10H_2O$ on solar evaporation.

37. SALT

Properties. Common salt (halite, NaCl) is a brittle mineral with conchoidal FRACTURE. HARDNESS is 2.5; SP. GR., 2.1 to 2.6; pure crystal generally weighs 136 lb. per cu. ft. Cubical crystals are common, less common are fibrous and stalactitic forms. Impurities, notably iron, frequently impart yellow or brown shades but the peculiar reddish tinge in solar crystals is thought to be organic in origin. Though readily soluble in water, NaCl is scarcely more soluble in boiling than in ice-cold water.

Uses. Salt is said to have over 1,500 uses. In the United States more than one-half the total consumption is used in making heavy chemicals, of which soda alkalies are most important. It is the direct source of chlorine and its derivatives, and of soda ash, caustic soda, sodium sulphate; and is the indirect source of many other sodium compounds. Roughly 15% of the domestic consumption is used in sugar and food-product industries. Other large consuming industries are leather, glue, dyes, textiles, soap, vegetable oils and greases, and glass and ceramics. As a refrigerant, salt is used in freezing and packing ice cream as well as in the brines at mechanical refrigerating plants. In several industries its main use is as a regenerator in zeolite water softening. Other quantities are used as weed-killer, ice remover, and for stabilizing and dust-laying on secondary roads. The average American uses only about 6 lb. of salt a year as condiment and another 6 lb. may be needed for preserving and processing foods, but the average per capita consumption is almost 70 lb. per year. Relatively insignificant quantities are used in metallurgy as flux and for chloridizing metals.

Occurrence. Salt is the commonest highly soluble mineral known and is the principal saline in sea water, which contains on the average 2.7% NaCl and 0.8% of other salts, chiefly sulphates of Ca, Mg, and K and small amounts of $CaCO_3$, $MgCl_2$, and $MgBr_2$. Great Salt Lake, Utah, and the Dead Sea, Palestine, are examples of inland salt lakes; in the form of natural or connate brine salt is widely distributed in sedimentary rocks and stored in glacial gravels or soils. Often these underground brines are bitterns containing other dissolved salts in proportions greatly different than in ordinary sea water, though most of them originally were fed by the sea. Rock salt occurs in beds and also in salt structures variously known as bosses, plugs, ridges, or domes, which are found in areas of sedimentary rocks throughout the world, but are structurally and genetically different from ordinary bedded deposits. Rock-salt beds or lenses are interstratified with sediments of all geologic ages (sandstones, shales, and, less commonly, limestones), also with gypsum, anhydrite, potash, and other salts. Single beds may be hundreds of feet thick and extend over many miles. The Permian Basin, which runs from Kansas into Texas and covers about 100,000 sq. miles, is virtually all underlain by salt. Some deposits contain almost pure salt but other saline minerals are abundant in many deposits and clay and sand are always likely to be admixed more or less intimately, at least in some portions of a deposit. As commercial sources of salt, bedded deposits are by far the most important.

Production. The United States is the leading producer of salt, furnishing about 30% of the world production of about 25,740,000 metric tons in 1929. Germany and Great Britain each produce about 2,000,000 tons annually and the total for Europe substantially exceeds the domestic output. Moreover about one-half of the domestic output never takes the form of dry salt but is pumped from the earth as brine and used directly for the manufacture of chemicals, chiefly by electrolysis, which yields soda and chlorine or joint products. The salt industry is not quite so nearly depression-proof as the food industries, but sales of domestic salt during the depression year 1932 were only about 25% less than in the boom year 1929 (whereas the general industrial index was off 46%); by 1936 they had topped the 1929 peak, rising to a new record of 9,241,564 short tons valued at $24,131,733 in 1937. Of this quantity 4,631,580 was salt in brine, 2,030,432 tons was rock salt, and 2,579,552 was manufactured or evaporated salt.

Selling. Refined table salt ordinarily costs 2 to 5¢ per lb. retail but this grade can be bought wholesale at the mine in bulk and sized, at less than $10 per ton, the spread being due almost as much to the cost of packaging as to transportation or distributing expenses. The yearly average value of all domestic salt sales f.o.b. mines in 1937 was $2.61 per short ton compared with 5-yr. averages of $3.32 in 1925–29 and $3.01 in 1930–34. This average is reduced by the inclusion of brine salt for chemical manufacture, which is valued at only about 40¢ per ton of salt contained. However, the average for rock salt is only a trifle over $3 per ton and for manufactured (evaporated) salt a little over $6.

Treatment methods vary widely according to the character of crude and the use toward which preparation is directed. ROCK SALT as mined is sold and shipped for many pur-

poses after a minimum of hand picking and sizing. At RETSOF (*129 A 381*) 8~6-in. lump; and 3/8~1/4-in., 1/4~5/32-in., 5/32-in.~8-m., and <8-m. sizes are shipped after preparation by screening on shaking and vibrating screens following graded crushing in Sturtevant vertical rotary crushers and rolls, taking small reductions in each crusher and rejecting the largest oversize, which is mostly shale. For certain purposes, however, small amounts of impurity are objectionable. Thus for human consumption, absence of Ca, which causes deliquescence, and of Mg, which makes the salt bitter, are requisite, and refining is required, involving solution and recrystallization.

When WELL MINING (see Weigel, *129 A 405*) is practiced, whether for rock salt or for recovery of connate brines from porous strata, the crude arrives at the surface as a saturated solution, and is thereafter evaporated with more or less care, and the crystal crop is more or less refined subsequently, according to the market; or, as in lime-soda plants, the raw brine enters directly into the consumer's process. When natural unsaturated brines (salt-lake or ocean) constitute the crudes, evaporation to a saturated brine or to the point of actual crystallization is a preliminary to refining. For detailed methods see Phelan, *Bul 146 USBM*. All crystallization methods depend upon the fact that sodium chloride is less soluble in water at high temperatures than the majority of the accompanying salts. Hence if the solution is clarified of sand, clay, and the relatively insoluble salts, such as gypsum, while near saturation with sodium chloride at the prevailing elevated temperature, further evaporation at elevated temperature yields a crop of NaCl crystal that is reasonably pure. Cooling is no particular aid in the crystallization of the salt (see Fig. 58) and is a hindrance to separation because of reduced solubility of the other salts present. The precipitated salt is drained, washed with its own brine (*i.e.*, by the addition of small amounts of fresh water), centrifuged, dried, crushed, and sized according to market demands. Soap flotation may be used after crystallization, instead of filtration or sedimentation, to remove clay and gypsum, if high purity is not demanded. Evaporation may be atmospheric in certain climates, but the crop is of lower purity than when crystallization is effected at higher temperatures.

38. SAND AND GRAVEL

Properties and uses. Sand and gravel are best described as unconsolidated granular material >200-m. resulting from natural disintegration of rocks. Sand is <1/4- or 1/10-in. and the top limit for gravel is about 3 1/2-in. Both weigh normally 90 to 110 lb. per cu. ft. Artificial or STONE-SAND is finely crushed stone, carefully screened. Shale, soft sandstone, coal, and other friable, unsound particles render material unfit for concrete aggregate; organic impurities and clay also are deleterious. Market sizes are mostly combinations of the following typical plant products: (1) Gravel, 2 1/2~1 1/2-in.; (2) gravel, 1 1/2~3/4-in.; (3) fine gravel, 3/4~3/8-in.; (4) roofing gravel, 5/8~1/4-in. (or finer); (5) general purpose sand, or washed concrete sand, <1/4-in. (usually with a fineness modulus of 2.50 to 3.40); (6) asphalt sand, <10-m.; and (7) asphalt filler, <100-m. Nos. 1 to 5, and even No. 6, are used in concrete and for road surfacing, the finest used for correcting coarser sands. No. 5 is used also for mortar and for certain plasters.

More than one-half the sand and gravel produced is consumed in concrete construction, either highways or buildings. About two-thirds of all gravel is used for paving (including concrete, bituminous, and cheaper construction); the balance is used chiefly in buildings and for railroad ballast. More sand is used in building than in paving, but these uses together account for over three-fourths of the consumption, the balance being special sands (*q.v.*) and a small amount of railroad ballast and miscellaneous-purpose sand.

Occurrence. Sand and gravel are abundant in every state and country. Glacial deposits are chief sources in north central and northeastern United States, in Canada, and in the northern half of Europe. In coastal regions, marine deposits are the major source. Lake and dune sands are locally important. The most widely distributed deposits are stream-laid. Residual gravels are likely to be variable in hardness, whereas transported gravels are composed largely of dense, resistant particles, approaching quartz in hardness, and hence more desirable for most purposes. Fluvial deposits frequently show rough size gradation, but the beds vary in thickness and coarse sand or gravel may be interspersed with lenses of fine sand and clay. They usually overlie an eroded rock floor, but may be spread over fine sediments. Delta deposits occur at the mouths of rivers and as alluvial fans or cones where swift mountain streams debouch on wide plains. Old streams, in wide valleys, leave terrace deposits that may be workable. Marine and lake deposits are the best sorted, glacial deposits the poorest, often containing everything from big boulders to fine silt. Wind-blown sand is usually fine-grained. Even-grained sand, free of silt, is usually purest. Only careful prospecting will disclose the area, thickness, and shape of a given deposit; even more important is careful sampling to ascertain the natural size gradation and physical characteristics.

Production of sand and gravel in the United States reached a peak of 225,000,000 tons valued at $130,000,000 in 1929; in 1937 it was 189,660,423 tons worth $97,472,997. Production from noncommercial plants, including those owned by Federal and local government agencies, comprised 7% of total in 1929, 34% in 1937. The proportion of gravel was 55% of the total tonnage in 1929 and 67% in 1937. Imports and exports are quite small. World production figures are not available but probably run slightly more than twice the domestic figures, large quantities of sand and gravel being produced in Germany, Great Britain, the U.S.S.R., and other industrial countries for local consumption.

Selling. In 1932 the railroads got 81¢ per ton of sand and gravel carried, whereas average value f.o.b. plant was only 53¢. This illustrates the importance of local markets. Declining consumption in cities and towns and increased demand for interurban highways have fostered the growth of small portable plants that can be set up near the job.

Recommended size specifications for typical uses have been published by the Division of Simplified Practice, National Bureau of Standards, Washington, D. C. Allowable percentages of organic impurities, of clay or silt, and of soft, friable, or unsound particles vary with local conditions, information on which often can be obtained from the National Sand & Gravel Assoc., Washington, D. C.

In 1937, Bureau of Mines reports showed average value of railroad ballast sand as 24¢ per short ton, building sand 57¢, and paving sand 55¢; commercial gravel averaged 73¢ for building and 60¢ for paving.

Treatment method is determined primarily by the market. The prevailing factors are: (*a*) specifications, (*b*) yearly tonnage, (*c*) maximum daily tonnage, (*d*) character of consumption, *i.e.*, one-job, or the scattered, continuous demand of a settled community. The secondary determinants of method have to do with the deposit: its extent, uniformity, size distribution, and mineralogical character.

The principles of treatment are simple. Assuming satisfactory soundness of the stone, specifications deal primarily with size; in some cases additionally, there is minor emphasis on shape. Hence sizing is the key operation. It is performed on screens down to a lower size in the general range of 1/4-in. to 10-m., and by classification at finer sizes. If the deposit is deficient in fine sizes, it is usually cheaper to produce these by crushing than by excavating a larger tonnage and spoiling the excess oversize. Hence one or more stages of crushing is common practice, depending upon the maximum size of gravel. If fine sizes are in excess they must be spoiled. Consumption of the entire product of treatment is substantially never in step with production; some size or sizes are always in excess. Hence segregated storage is an essential operation in all plants, with provision for handling products in and out of storage. In connection with such handling, it is usual to arrange for proportional withdrawal from storage in order to satisfy specifications for blends comprising two or more short-range products.

Screens are almost invariably of vibrating or high-speed shaking types except when, as in small operations, installation of a sectional revolving screen over a compartmented bin saves enough in first cost of screen and associated transport machinery to justify the lower capacity and efficiency; or when considerable clay is present, and the more vigorous disintegrating action of the wash-trommel type is necessary. In some large plants separate screens are used for scalping and final grading (as at HIWASSEE DAM, Fig. 74), on the principle that total screen surface necessary at a given size split may be reduced (with corresponding reduction in operating cost) by taking circulating loads off the grading screens. Such an arrangement also allows greater flexibility in routing in the crushing plant.

Classifiers are usually of the sand-tank type (Sec. 8, Art. 8) in small plants, and of mechanical types (Sec. 8, Arts. 2 to 7) in large. The drag classifier is an effective deslimer, but is not so effective in making splits at a specified sand size as a classifier of the rake or spiral type. The sand tanks are substantially limited to desliming unless used with hydraulic water. Hydraulic classifiers (Sec. 8, Arts. 10 and 11) are used only for special sands; their capacities are too low for aggregate-sand plants.

Crushers are ordinarily of the hard-rock types, *i.e.*, jaw or gyratory for the primary, and reduction gyratory or cone crusher for the secondary. If crushing for aggregate sand is necessary, short-head cones, rolls, or rod mills are usual; occasionally an impact mill is used, even with hard gravel, for making an equiaxed product.

Storage is of the open, ground type in all but the smallest intermittent plants that run only for immediate shipment. The usual arrangement is a conveyor-fed stockpile over a tunnel conveyor, with sufficient live capacity for ordinary requirements, and traveling bucket cranes or bulldozers for moving dead material as necessary. Stockpiles of finished grades are often set over the same reclaiming conveyor, and constant-weight feeders used to permit blending during withdrawal. Equalizing storage is usually provided between pit and preparation plant, and frequently between the primary and secondary crushing plants to render the three operations mutually independent. The time of such independence ranges from a fraction of a day to several weeks.

Transport of material in process and into and out of storage is usually by belt conveyor except for fluid sand pulps, and in the unusual case where a high vertical : horizontal ratio is a structural necessity. The arrangements are legion; see Sec. 18, manufacturers' catalogues, and the detailed descriptions of operating plants in the technical periodicals of the industry. Short transfers of coarse material are usually made, however, by pan or apron conveyor, particularly when loading involves considerable

fall, as from a primary crusher, or the transfer must be made on a steeper incline than is possible on a belt conveyor. Sand-size pulps with high water content and slimes are elevated by centrifugal sand pumps (Sec. 18, Art. 17).

Separating and blending. Formulas for the quantities of materials of given size characteristics to be subtracted from or added to a given feed in order to yield a product of desired characteristics are given at Sec. 19, Eqs. 169 to 174.

Example 1. **Washing.** Given the sand, Table 20, Col. 1, what percentage must be taken away to satisfy the specification in Col. 2, and what will be the screen test of the resulting sand? SOLUTION: By inspection, if <200-m. only is taken away, the effect on screen test will be to approach the specification directly in so far as <200-m. is concerned, and this deduction will be subtractive as to all of the other figures of the sizing analysis, the change from the original analysis being less, the larger the number in the original analysis. If it is not attempted to remove all of the <200-m., a bowl-rake classifier can be operated to overflow only <200-m. and still leave not more than the specification limit of 6.5% <200-m. in the sand. Allowing for inefficiency of the apparatus, calculate for 5.0% <200-m. Then in Eq. 171, Sec. 19, $f_{200} = 19.5$, $c_{200} = 5$, $d_{200} = 100$, and $s = 0.15$, or 15% of the

Table 20. Screen analyses for Example 1

Mesh	Percentages passing						
	1	2	3	4	5	6	7
	Feed, f_n	Specification	Washed sand, c_n	Overflow, d_n	Washed sand, c_n	Overflow, d_n	Washed sand, c_n
4	96.0	95 to 100	95.2	.....	95.2	.....	95.0
8	87.3	70 to 90	85.0	.....	84.5	.....	84.2
14	70.5	50 to 70	65.3	.....	63.8	.....	63.1
28	51.0	30 to 50	42.3	.....	40.2	.....	38.8
48	37.1	15 to 30	26.0	.....	23.3	100	21.4
100	27.0	8 to 13	14.1	100	11.0	96	8.8
200	19.5	0 to 6.5	5.0	95	3.0	71	1.0

feed must be overflowed. Now apply Eq. 173 successively to the various sizes to get the screen test of washed sand shown in Col. 3. This satisfies specification as to all except <100-m. To reduce this figure, the feed must be washed harder, in which case some >200-m. material will be overflowed. Assume that an overflow of the sizing shown in Col. 4 will be obtained in washing to 3.0% <200-m. Then $f_{200} = 19.5$, $c_{200} = 3.0$, and $d_{200} = 95$, whence $s = 0.18$, and the screen test of washed sand is as Col. 5. If the specification is changed to 5 to 10% <100-m. and 0 to 2% <200-m., remaining otherwise the same, the sand must, of course, be washed yet more deeply and overflow must have the characteristics given in Col. 6. Setting $c_{200} = 1.0$, d_{200} is 71.0, $s = 0.26$ and $c_{100} = 3.5$, which is too coarse for specification. If c_{100} is set at 5.0, $s = 0.24$ and $c_{200} = 3.0$, which is too fine. In other words, the specification sand cannot be made from the feed with a bowl-rake classifier overflowing material of normal size distribution. If, however, the material is treated in a hydro-bowl with hydraulic water, an overflow approximating Col. 4 can be made, with which, setting $c_{200} = 1.0$, $s = 0.20$ and the sand has the size distribution shown in Col. 7.

Example 2. **Screening.** When separation is effected by screening, the oversize always contains some undersize, so that s is greater than is to be calculated from the screen test of the feed on the basis of a clean split. The amount and distribution of undersize in oversize may be approximated from study of the tables of screen performances in Sec. 7. Once s is thus established the screen tests of the products may be approximated from Eq. 173, Sec. 19, which may be rewritten, for convenience, as $v_n(f_n - su_n)/(1 - s)$ or $u_n = [f_n - v_n(1 - s)]/s$, where v is oversize and u undersize, if some assumption is made as to distribution of undersize in oversize. If feed is moist (not wet) this undersize will be distributed principally between the coarsest and finest through-screen sizes, say one-quarter fines and three-quarters distributed 50% on the first test screen below the separating mesh, 38% on the second, and 12% on the third. In Table 21, Col. 1 was a screen test of feed to a relatively flat vibrating screen with 1 1/4-in. aperture. The feed was moist. Oversize should carry about 15% undersize. Hence, per 100 tons feed, oversize should be 26.5/0.85 = 31.2 tons ($s = 1 - 0.31 = 0.69$), and the 4.7 tons per 100 tons of undersize in this oversize should be 0.25 (4.7) = 1.2 tons <8-m., 0.5 (4.7 − 1.2) = 1.8 tons on 1-in., 1.3 tons on 3/4-in., and 0.4 tons on 1/2-in. Screen test of oversize on these assumptions is given in Col. 2 and calculated screen test of undersize from the formula in Col. 3.

Example 3. **Blending.** Prediction of the screen tests of a blend, knowing the screen tests of the ingredients and their proportions, is simple (Eq. 174, Sec. 19). The usual problem is to determine the proportions in which two stocks must be blended to meet a given specification. Table 22, Cols. 1 and 2, gives screen tests of two sands, and in Col. 3 is the specification to be met in blending them. If this specification can be met in entirety by simple blending, the smallest proportion of added sand (Col. 1) that will do it is that which gives the largest value of i when Eq. 172, Sec. 19, is applied. In the present case this is 0.67 for i_{100} (Col. 4), whence if 67 parts of a_n is added to 100 parts of f_n the screen test of b_n will be as in Col. 5.

Table 21. Screen analyses for Example 2

Mesh	Percentage passing		
	1	2	3
	Feed, f_n	Oversize, v_n	Undersize, u_n
2-in.	98	90	100
1 1/2	85	24	100
1	62	15	83
3/4	43	8	59
1/2	31	.....	42
3/8	26	.....	35
4-m	17	.....	22
8	13	6	17

Table 22. Screen tests for Example 3.

Mesh	Percentage passing				
	1	2	3	4	5
	Feed, f_n	Added fines, a_n	Specification	i	Blend, b_n
4	95	100	95–100	0	97
8	60	99	70–90	0.32	75
14	36	89	50–70	0.36	58
28	21	64	30–50	0.26	38
48	11	36	15–30	0.19	21
100	6	11	8–13	0.67	8
200	4	3	0–6.5	0	3.6

Rosoff Sand & Gravel Corp., Fig. 66 (*44 #3 RP 30*).

Location: Kerhonkson, N. Y.

Crude: Deposit contains an over-all average of 60% sand and 40% gravel; from 40 to 60% of the gravel requires crushing.

Products: N. Y. Board of Water Supply-specification gravels and sand as follows: No crushed material in sand:

Size	<1 1/2-in.	1	3/4	1/2	3/8	1/4
1 1/2-in. aggregate	95 to 100	30 to 70	0 to 8	.....	.....	.....
3/4-in. aggregate	.....	.....	95 to 100	40 to 80	10 to 30	0 to 7
Sand	.....	.....	.....	.....	.....	100
Size	**4-m.**	**8**	**16**	**30**	**50**	**100**
1 1/2-in. aggregate	.....	.....	.....	.....	.....	.....
3/4-in. aggregate	.....	.....	.....	.....	.....	.....
Sand	95 to 100	85 to 95	40 to 70	20 to 50	12 to 30	0 to 3

Power: Push-button control from a central observation panel; warning to attendant posts by loudspeaker.

Labor: 19-man crew for excavation, transport, and washing.

Water: 2,500 g.p.m. from a nearby creek; static pressure on 8-in. line is 300 ft.; Worthington centrifugal pump, 250-h.p. motor.

Mill site: Sloping, 115-ft. fall in 386 ft.

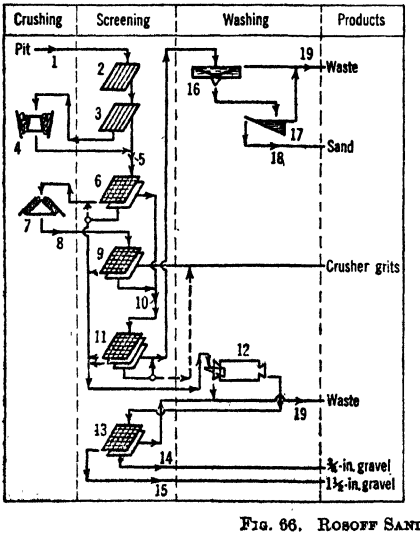

FIG. 66. ROSOFF SAND & GRAVEL CORP.

Legend for Fig. 66:

1. 8-cyd. dump trucks; feed hopper with 3×6-ft. reciprocating-plate feeder.

2. Flat sledging grizzly on feed hopper, 100-lb. rail, 15-in. spacing; all sledged through.

3. 1 @ 54-in. 10-ring rotary grizzly, 4-in. spacing, 2 1/4-in. alloy-steel rings, 12 r.p.m.

4. 1 @ No. 16-B Telsmith gyratory crusher, 4-in. open setting.

5. Surge bin with 3×6-ft. reciprocating-plate feeder; 36-in. inclined conveyor.

6. 1 @ 5×12-ft. 2-deck Telsmith vibrating screen (Sec. 7, Art. 8), 1 1/2- and 3/4-in. openings; flap gate on 3/4-in. oversize regulated to send enough 1 1/2~3/4-in. material to (7) to produce substantially equal quantities of 1 1/2-in. and 3/4-in. gravel (see specifications) in plant products. Water added to undersize.

7. 1 @ 36-in. Telsmith Gyrasphere crusher (Sec. 4, Art. 7), 4 1/2-in. receiving opening; adjusted to produce desired proportions of <1 1/2-in. and <3/4-in.

8. 1 @ 18-in. conveyor.

9. 1 @ 3×10-ft. 2-deck vibrating screen, 3/4- and 1/4-in. cover, water sprays at 15- to 40-lb. pressure.

10. Hopper beneath screen (6).

Legend for Fig. 66—Continued:

11. 2 @ 5×12-ft. triple-deck Telsmith vibrating screens, 3/4-in., 1/4-in., and 8-m. screens; flap gate on lowest deck to divert part of 1/4~8-m. to <8-m.; water sprays at 15- to 40-lb. pressure.

12. 2 @ 6×10 1/2-ft. countercurrent scrubbers; water jets at 15- to 40-lb. pressure.

13. 2 @ 3×8-ft. 2-deck Telsmith vibrating screens, 3/4-in. and 1/4-in. screens.

14. 1 @ 24-in. conveyor; 1 @ 500-cyd. Blaw-Knox steel storage bin.

15. As (14).

16. 1 @ 24×6 1/2-ft. hydro-bowl classifier; 180 tons solid per hr., approx. 200-m. separation; underflow 50 to 60% solids.

17. 1 @ 9×25 1/2-ft. rake classifier, 2 1/4-in. per ft.; approx. 100-m. separation; sand about 20% moisture.

18. 24-in. belt conveyor; 500-cyd. Blaw-Knox steel storage bin.

19. 5 settling ponds, aggregate area about 10 acres.

Summary. Crudely split gravel >4-in. and >1 1/2-in. crushed in parallel stages in standard and high-speed gyratories to <5% >1 1/2-in.

Boston Sand & Gravel Co., Fig. 67 (*44 #1 RP 50*).

Location: Quonset Point, R. I. (special plant for naval base).
Crude: Glacial gravel with large boulders and some decomposed granite; gravel content about 60%.
Capacity: 200 t.p.h. feed.
Recovery: About 50%.
Water: 800 g.p.m. pumped from nearby stream.
Power: Purchased; comes 0.7 mi. from town at 550 volts.
Building: Plant unenclosed; has operated down to 16° F.
Hauling: 10-ton Sterling trucks.

Legend for Fig. 67:

1. Diesel shovel, 1 1/4-cyd.

2. End-dump trucks; short haul.

3. Rail grizzly, 12×20-in. openings, over a loading hopper; 2 1/2×5 1/2-ft. Telsmith plate feeder.

4. Not economical to install a primary crusher at this point.

5. 30-in.×153-ft. belt conveyor with full-length skirt boards.

6. Rotary grizzly, 4-in. spacing.

7. 1 @ 18×30-in. jaw crusher, 1 1/8-in. closed set; 60-hp. motor.

8. 1 @ 5×10-ft. Telsmith Pulsator screen, 2 1/2-in. aperture.

9. 1 @ No. 36 Gyrasphere crusher, 1 1/8-in. closed set; 75-hp. motor.

10. 1 @ 24-in.×96-ft. belt conveyor.

11. 1 @ 3×8-ft. 2-deck Pulsator screen, 1-in. (guard) and 3/8-in. apertures.

12. Contains much of the decomposed granite; discharged here to improve soundness tests.

13. 1 @ 24-in.×135-ft. belt conveyor.

14. 1 @ 5×18-ft. rotary washing screen, 10-ft. scrubber section (blank plate) and 12-ft. jacket, 1-in. and 3/8-in. apertures.

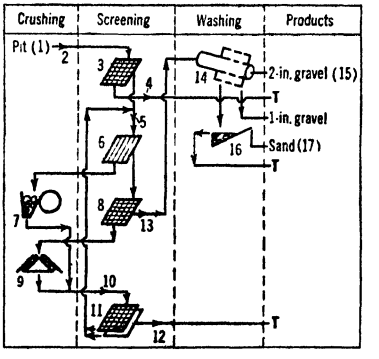

15. Blended with some of 1-in. product in chute to bin to make 2-in. Navy specification.

16. 1 @ 36-in. and 1 @ 48-in. classifier.

17. ± 1% <100-m.

FIG. 67. BOSTON SAND & GRAVEL CO.

Summary. Initial split at 2 1/2-in. on screens; oversize crushed to about 2-in. nominal limiting size in parallel streams of >4-in. and 4~2 1/2-in. materials, with rejection of <3/8-in. from crushed undersize before closing circuit on the 2 1/2-in. screen. Original gravel <2 1/2-in. and 2 1/2~3/8-in. crushed product washed and graded to 2-in. and 1-in. gravel and 3/8~100-m. sand.

Table 23. Sand sizings at Montgomery Gravel Co.

Screen, mesh	Per cent. passing	
	Specification	Product
4	95 to 100	98.5
8	.....	85.5
16	35 to 75	69.0
30	.....	49.3
50	10 to 20	15.9
100	1.5 to 7	2.8

Montgomery Gravel Co., Fig. 68 (*41 #8 RP 30*).

Location: Montgomery, Ala.
Capacity: 106 t.p.h. each of sands and gravel.
Crude: About 40% gravel.
Products: See Table 23.

Summary. Specification sand made by classifying out excess 16~50-m. and <150-m. Lack of storage compensated by mining an excess and wasting variable amounts of wanted sizes.

Legend for Fig. 68:

1. 12-in. Amsco Type H pump, 4,500 g.p.m. water and solids at a consistency ranging from 0 to 18% solids; receiving box.

2. Fixed screen, 30° slope, 3/16-in. sq. aperture. Undersize contains about 80% of total water and practically all <16-m.

3. 1 @ 36-in. flume with adjustable horizontal splitter; slope, 3 i.p.f.

4. 1 @ 6-ft. Auto-vortex classifier (Sec. 8, Fig. 24); set for 16-m. split; surge box (1/2-cyd. capac.) with adjustable bottom gate under spigot; overflow wasted to maintain uniform feed rate to (7). Spigot product contains less than 2% <50-m. and a trace of <100-m.

5. 1 @ 8-ft. Auto-vortex classifier; set for 50-m. split; spigot, 1% >6-m., 2% <50-m.

6. 2 @ 3×8-ft. 3-deck Niagara screens, 1 1/2-, 3/4-, and 1/4-in. apertures.

7. 2 @ 15-ft. hydro-bowl classifiers, 1 1/2 m.p.r.; <150-m. overflow; spigot product, see Table 23.

8. Alternative.

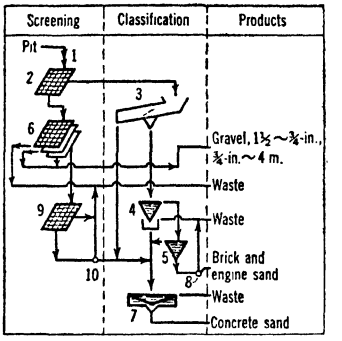

9. 1 @ 24-in.×6-ft. Hendrick launder screen; slope, 2 in. per ft.; 10-m.×1/2-in. slotted apertures.

10. Splitter.

FIG. 68. MONTGOMERY GRAVEL CO.

Metropolitan Sand & Gravel Corp., Fig. 69 (*46 #2 RP 32*).

Location: Port Washington, N. Y.

Capacity: 800 cyd. per hr.

Crude: Bank gravel, 500 acres extent; mostly <2-in. with 85% sand, but only about 6% <80-m.

Legend for Fig. 69:

1. 1 @ 7-cyd. electric dragline, 110-ft. boom, 90-ft. face carried; 1 @ 160-cyd. steel hopper over loading tracks, top (30 ft. above track level) on level with dragline bench, can be moved ±40 ft. to a new loading position in about 20 min. by jacking up and taking weight on sand cars (2).

2. 4 @ 40-cyd. standard-gage gondola cars; Diesel locomotive; 1 mi. to crude storage.

3. 12,000-cyd. (live) storage under 300-ft. steel trestle through which hopper-bottom cars (2) dump; dump doors electrically operated by push-button control. Dump time about 2 min. Reclaiming tunnel 30 ft. below track level.

4. Jeffrey-Traylor vibrating feeder, and 1 @ 36-in.×140-ft. inclined belt conveyor drawing from end 50 ft. of stockpile; other 250 ft. drawn by vibrating feeders onto 1 @ 36-in. transfer belt; both at 500 f.p.m. Ball-bearing idlers; 5- and 6-ply belt throughout plant.

5. 1 @ 5×10-ft. 2-deck Ty-rock screen, 2-in. and 1 1/2-in. sq. openings.

6. Normal operation, when no call for 2~1 1/4-in.

7. 1 @ 36-in. Traylor reduction gyratory, 1 to 1 1/4-in. set.

8. 1 @ 24-in. belt conveyor to (4).

9. Alternative.

10. 1 @ 36-in.×322-ft. inclined (+4 i.p.f.) belt conveyor, 500 f.p.m.

11. Butterfly gate in conveyor-discharge chute.

12. 2 @ 5×23-ft. revolving scrubbers, 8-ft. blank section with retaining ring and about 250 steel balls; 3/8×3/4-in. and 1/10×3/4-in. wire screens; 18 r.p.m. Normal percentage scrubbed is

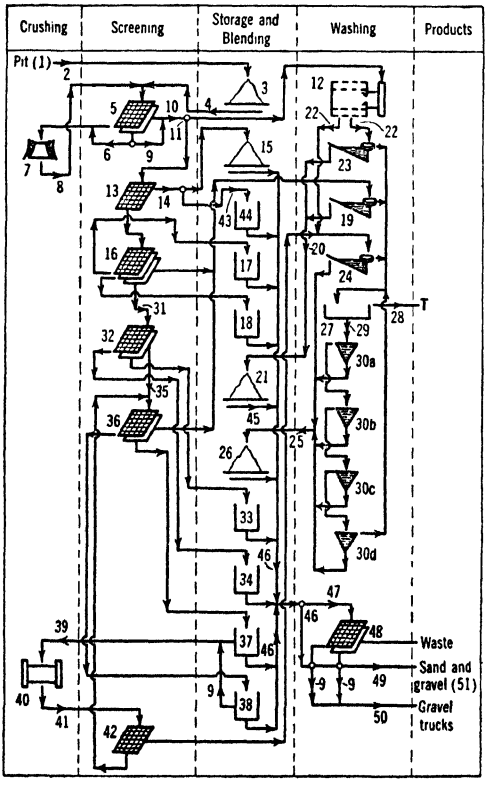

FIG. 69. METROPOLITAN SAND & GRAVEL CORP.

Legend for Fig. 69—Continued:

15 to 20, largely to increase fines for asphalt sand.

13. 2 @ 5×14-ft. Riplflo (vibrating) screens, 1/8×4-in. Ty-rod cover (0.063-in. wire), 40° slope.

14. Hopper; 1 @ 36-in.×140-ft. stacking conveyor.

15. Stockpile, 180,000-ton (60,000 tons live), 110 ft. high (max.), for dry-screened brick or plaster sand.

16. 2 @ 5×10-ft. 3-deck Ty-rock vibrating screens, 1 1/4-, 3/4-, and 1/8-in. apertures; run wet.

17. 1 @ 40 (diam.)×45-ft., 1,200-ton reinforced concrete bin (6 of these form the support for the plant structure).

18. 1 as (17).

19. 2 @ 12-ft. bowl-rake classifiers.

20. 1 @ 36×120-ft. stacker conveyor.

21. 1 @ 16,500-ton (live) stockpile; wet plaster or brick sand.

22. From one only.

23. 1 as (19).

24. 1 as (19).

25. 1 @ 24-in. belt conveyor.

26. 1 @ 8,000-ton (live) stockpile; asphalt sand.

27. 1 @ 7 (deep)×12×24-ft. settling tank.

28. Slimy water.

29. Pump.

30. Items *a*, *b*, *c*, *d* are 4 Greenville automatic cones.

31. 1 as (25).

32. 1 @ 4×12-ft. 2-deck Ty-rock vibrating screen, 1/2- and 1/4-in. apertures.

33. 1 as (17); 1/2~1/4-in.

34. 1 as (17); 3/4~1/2-in.

35. 1 as (25).

36. 1 as (32), 3/16-in. and 1/10-in. apertures.

37. 1 as (17); pea gravel, 1/4~3/16-in.

38. 1 as (17); grits, 3/16~1/10-in.

39. 1 @ 12-in.×65-ft. bucket elevator; distributing hopper.

40. 4 @ 22-in. Greenville impact crushers; 1,800 r.p.m.; 25-hp. motor; 15 t.p.h. Feed 96% >8-m.; product, 60% <8-m., 20% <50-m., 7.5% <100-m., 3% <200-m. Plates run 24 hr., are turned, and run 16 to 24 hr. additional.

41. Elevator.

42. 1 @ 2×7-ft. washing screen, 16-m. aperture.

43. As needed: Draw from hopper (14) to screw conveyor to 1 @ 5×24-ft. rotary oil-fired drier. Dust to storage bin, then blended into asphalt sand.

44. 1 as (17).

45. 1 @ 36-in.×160-ft. cross conveyor.

46. 1 @ 36-in.×350-ft. tunnel conveyor under all storage units as indicated.

47. Gravel only to (48).

48. 1 @ 4×14-ft. 2-deck Ty-rock rinsing screen, 3/4- and 1/8-in. Ty-rod cover.

49. 1 @ 36×650-ft. conveyor to loading dock, 500 f.p.m.; 1,500 t.p.h.; short conveyor with Merrick Weightometer.

50. 1 @ 30-in. belt conveyor; 1 @ 4-compartment circular concrete-block truck-loading bin.

51. 90 @ 500- to 750-cyd. barges to coast points.

Products: 2~1 1/4-in., 1 1/2~1 1/4-in., 1 1/4~3/4-in., 3/4~1/2-in., 1/2~1/4-in., 1/4~3/16-in., 3/16~1/10-in., <1/10-in. dry screened brick and plaster sand, <1/10-in. washed brick and plaster sand, <1/10-in. dried sand, <1/10-in. asphalt sand with up to 25% <80-m., <3/16-in. concrete sand blended to specification.

Water: Fresh, from an artificial lake.

Power: Total connected, 1,486 hp. All drives either V-belt or direct through gear reducers.

Building: Steel and concrete.

Summary. A fine-gravel deposit graded by screening to 1/8-in., and by water classification of finer sizes to produce 10 to 12 primary sizes, from which blended mixtures are made according to demand in drawing from storage.

Grand Coulee Dam, Fig. 70 (*129 A 156*).

Location: Coulee Dam, Wash.

Capacity: 1,000 t.p.h. nominal; 1,700 t.p.h. normal; 2,500 t.p.h. maximum throughput.

Specifications: Cobbles, 6~3-in.; coarse gravel, 3~1 1/2-in.; medium gravel, 1 1/2~3/4-in.; fine gravel, 3/4~1/4-in.; sand: FINENESS MODULUS (= Σ cumulative >4-, >8-, >14-, >28-, >48-, >100-m./100) 2.5 to 3.0; distribution, see Table 24.

Table 24. Quantities and sizes (*a*) of sands at Grand Coulee

Item	Pit sand	Coarse sand	Med. sand	Fine sand	Combined sands *e*	Blended sand *f*
Ref. No. *c*	.....	28	29	30	37	.....
T.p.h.	*b*	250	70	90	410	.....
Mesh						
4	0.3	1	.....	.....	0.7	.....
8	13	23	.....	.....	14	12
14	27	50	3	.....	31	32
28	42	77	18	1	50	56
48	63	94	62	7	70	80
100	92	99	100	67 *d*	93	95
Modulus	2.37	3.44	1.83	0.75	2.59	2.75

a Cumulative percentages. *b* Variable. *c* Flowsheet, Fig. 70. *d* 98% > 200-m.

e Not as blended; see Col. 6. It appears, in comparison with the pit sand, that the rise in modulus was principally caused by rejection of 48~100-m. material in the final classifier (30), and that the only function of classifiers (28, 29) was to reduce burden on the rakes of the final machine.

f Sought.

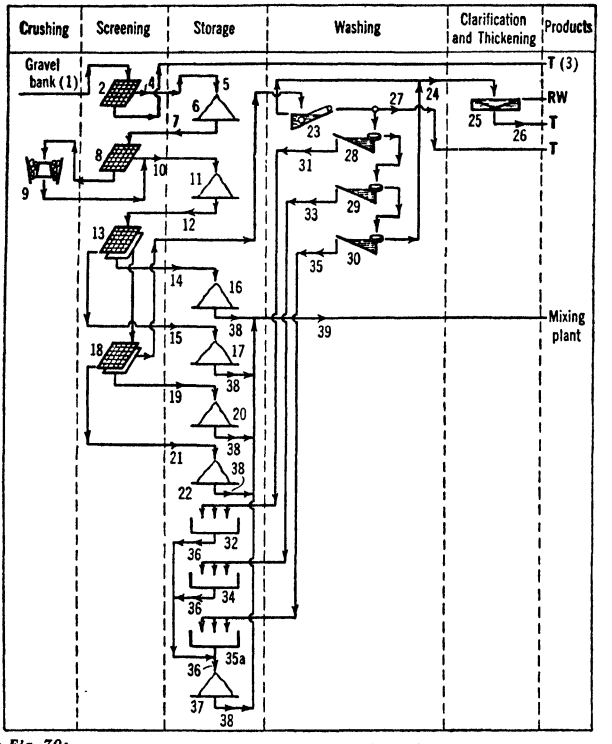

Legend for Fig. 70:

1. 2 @ 5-cyd. shovels, each delivering directly to (2).

2. 1 grizzly, 16-in. aperture, mounted above hopper on boom conveyor (4).

3. Rejected on floor of pit.

4. Receiving hopper; 1 @ 4×7 1/2-ft. Jeffrey-Traylor vibrating feeder; 1 @ 42-in. boom conveyor (1,250 t.p.h.).

5. Discharges from 2 items (2, 4) combine; 1 @ 60-in. belt conveyor, 2,500 t.p.h.

6. Raw-stock open storage.

7. 4×8-ft. vibrating feeders; 1 @ 60-in. conveyor.

8. 2 @ 6×22-ft. revolving screens.

9. 1 @ No. 20-A Telsmith gyratory crusher, 6-in. open setting.

10. 1 @ 48-in. belt conveyor.

11. Surge pile.

12. 2 tunnels with 3 1/2×5-ft. vibrating feeders to

2 identical parallel units

as follows: 1 @ 42-in. belt conveyor.

13. 2 @ 5×10-ft. 2-deck Symons screens, 3- and 1 1/2-in. apertures, reclaimed water to feed trough and head-end spray; clear water to tail-end sprays.

14. 2 @ 24-in. conveyors in series.

15. 2 @ 24-in. conveyors in series.

16. 6~3-in. gravel, 2,340 tons live storage.

17. 3~1 1/2-in. gravel, 2,125 tons live storage.

18. 4 @ 2-deck vibrating screens in parallel, 3/4- and 1/4-in. apertures; water as (13).

19. As (15).

20. 1 1/2~3/4-in. gravel, 2,125 tons live storage.

21. As (15).

22. 3/4~1/4-in. gravel, 2,340 tons live storage.

23. 2 @ 4-drag sand dewaterers.

24. 250 to 300 t.p.h.

25. 1 @ 125×250-ft. thickener with 2 torque mechanisms and 1 @ 125-ft. torque thickener in parallel; 4.6 r.p.h.; concrete tank, 11 ft. deep at periphery. Feed ranges from 4 to 10% solids (1.5 to 3% >100-m.); about 20,000 g.p.m. underflow, 400 t.p.h., average 28% solids.

26. 3@150-t.p.h. Kimball-Krogh sludge pumps.

27. 50 to 65%; 3 @ 42-in. conveyors in series (1,500 to 1,800 t.p.h.); 45-in. stacker units. 4% <200-m.

28. 1 @ 13(diam.)×8×35-ft. bowl-rake classifier; see Table 24.

29. 1 @ 16(diam.)×8×35-ft. bowl-rake classifier; see Table 24.

30. 1 @ 25(diam.)×6×39 1/2-ft. bowl-rake classifier; see Table 24.

31. 1 @ 24-in. conveyor with tripper, 125 t.p.h.

32. 4~20-m. sand-draining bins.

33. 1 as (31), 100 t.p.h.

34. 20~48-m. sand-draining bin.

35. 1 as (31), 55 t.p.h.

35a. 48~100-m. sand-draining bin.

36. 30×48-in. belt feeders to 30-in. mixing conveyor, 280 t.p.h.; 36-in. belt conveyor; 2 @ 150 t.p.h. sand mixers; 1 @ 36-in. belt conveyor with tripper.

37. Sand storage, 3,500 tons; see Table 24.

38. Remote-control gates in tunnel running under piles.

39. 48-in. conveyor to mixer storage.

FIG. 70. GRAND COULEE DAM plant.

Summary. Pit gravel scalped at 16-in.; 16~6-in. crushed through 6-in., sized on vibrating screens into 4 grades over the range 6- to 1/4-in. and thoroughly washed; sand <1/4-in. (4-m. max.) roughly deslimed in drag classifiers, and slime and the bulk of the drag sand wasted; the residue of drag sands graded into three sizes by bowl-rake classifiers and then blended to specification. Storage (open-ground) provided between pit and crusher, between crushing and screening, and for the separate gravels and sands prior to blending.

Shasta Dam, Fig. 71 (*33 # 9 PQ 43*).

Location: Near Redding, Calif.
Crude: Gravel with excess of cobbles and dearth of fine sand; small percentage of soft stone.
Capacity: 1,500 t.p.h.
Water: 7,400 g.p.m. by 1 @ 5,000-g.p.m. and 1 @ 2,400-g.p.m. turbine-type pump from Sacramento River.

Legend for Fig. 71:

1. 7-cyd. and 10-cyd. shovels and draglines; 42-in. pit conveyors; 42-in.×2,000-ft. inclined conveyor.
2. Grizzly, 7-in. aperture.
3. 1 @ 16×42-in. Farrell-Bacon jaw crusher, 7-in. open setting.
4. 1 @ 42-in.×324-ft. inclined belt conveyor.
5. Stockpile, 8,200 tons live capacity.
6. 3 lever-operated slide gates; 3 air-operated drop gates; 3 vibrating feeders; 1 @ 42-in. ×375-ft. tunnel conveyor; Merrick Weightometer.
7. 2 @ 5×10-ft. 2-deck Tyrock screens, 6- and 2-in. apertures; high-pressure spray nozzles.
8. 1 @ 4-ft. Traylor reduction gyratory.
9. 2 @ 5×10-ft. 2-deck Tyrock screens, 5/8- and 1/4-in. cloth; high-pressure spray nozzles.
10. 1 @ 8×30-ft. Joshua Hendy revolving scrubber.
11. 1 @ 5×10-ft. 2-deck Tyrock screen, 5/8- and 1/4-in. cloth; high-pressure spray nozzles.
12. Chain-belt Rex sand drag.
13. 1 @ 36-in.×396-ft. belt conveyor.
14. 2 @ 5×10-ft. 2-deck Tyrock screens, 3- and 1 3/4-in. wire cloth.
15. Stone ladder.
16. Stockpile, 6~3-in. cobbles, 2,000 tons live storage.
17. 1 @ 24-in.×44-ft. belt conveyor; stone ladder.
18. Stockpile, 3~1 1/2-in. gravel, 2,000 tons live storage.
19. 2 @ 5×10-ft. 2-deck Ty-rock screens, 3/4- and 1/4-in. wire cloth.
20. 1 @ 18-in.×100-ft. conveyor; stone ladder.
21. Stockpile, 1 1/2~3/4-in. gravel, 2,000 tons live storage.
22. 1 @ 18-in.×160-ft. conveyor.
23. Stockpile, 3/4~1/4-in. gravel, 2,000 tons live storage.
24. 1 @ 8×11-ft. ball mill.
25. 1 @ 20-ft. hydro-bowl classifier.
26. 1 @ 9×30-ft. rake classifier.
27. 1 @ 24-in.×222-ft. belt conveyor.
28. Stockpile, 4~28-m. sand.
29. 1 @ 14-ft. hydro-bowl classifier.
30. 1 @ 8×27-ft. rake classifier.
31. 1 @ 20×255-ft. belt conveyor.
32. Stockpile, 28~60-m. sand.
33. 1 @ 6×33-ft. rake classifier.

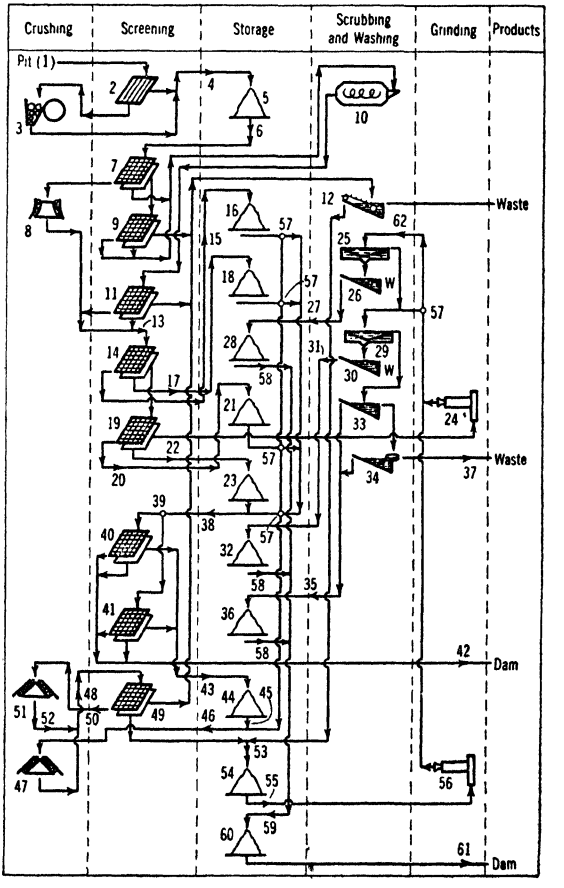

FIG. 71. SHASTA DAM plant.

Legend for Fig. 71:—Continued

34. 1 @ 25(diam.)×14×36 1/2-ft. bowl-rake classifier.
35. 1 @ 18-in.×301-ft. belt conveyor.
36. Stockpile, 60~100-m. sand.
37. 1 @ 4-in. Kimball-Krogh centrifugal pump.
38. 1 @ 36-in.×343-ft. tunnel reclaiming conveyor.
39. Alternative according to size.
40. 1 @ 5×12-ft. 2-deck Ty-rock screen, 3 1/2- and 1 3/4-in. cloth.
41. 1 as (40), 7/8-in. and 3/16-in. cloth.
42. Washed gravels separately to conveyor system to dam.
43. 2 @ 24-in. belt conveyors in series.
44. Surge pile.
45. 1 @ 24-in.×43-ft. belt conveyor.
46. 1 @ 24-in.×347-ft. belt conveyor in tunnel with (38).
47. 1 @ 4-ft. short-head cone crusher.
48. 1 @ 18-in.×213-ft. belt conveyor.
49. 1 @ 5×10-ft. 2-deck Ty-rock screen, 5/8- and 1/8-in. wire cloth.
50. 1 @ 18-in.×78-ft. belt conveyor.
51. 1 as (47), set for <3/8-in. product.
52. 1 @ 18-in.×90-ft. belt conveyor.
53. 1 @ 18-in.×152-ft. belt conveyor.
54. Stockpile, 1,000 tons live capacity.
55. 1 @ 18-in.×229-ft. belt conveyor; Merrick Weightometer.
56. 1 @ 8×12-ft. Marcy rod mill.
57. Alternative.
58. Rotary-vane feeder; Feed-o-weight.
59. 1 @ 30-in.×772-ft. reclaiming conveyor.
60. Blended-sand stockpile with Bodinson traveling-wing tripper; 30,000-ton live capacity; 5 motor-operated gravity gates to tunnel.
61. 1 @ 36-in.×445-ft. conveyor with Weightometer to conveying system to dam, 9.6 mi.
62. 8 Pan-American rougher jigs; hutch product to a base-metal trap; overflow to a cleaner jig; hutch to a Pan-American revolving amalgamator; tailing to a scavenger jig together with the trap settlings.

Summary. Primary crushing and rejection of unsound rock by washing primary <1/4-in.; scrubbing of all 6~1/4-in. primary gravel, followed by wet screening to four gravel sizes. Three sand sizes made on washed primary <1/4-in. material by classification, unsound material being first further disintegrated by light ball milling. Deficit of sand made up by crushing current excess gravel sizes and grinding in wet rod mill. Some gold recovery by usual placer-jig methods (see Sec. 2, Art. 20).

Dravo Corp., Keystone Sand Division, Fig. 72 (*33 #11 PQ 83; 43 #4 RP 36*).
Location: Ohio River, near Pittsburgh, Pa.
Capacity: 250 t.p.h. of aggregate.

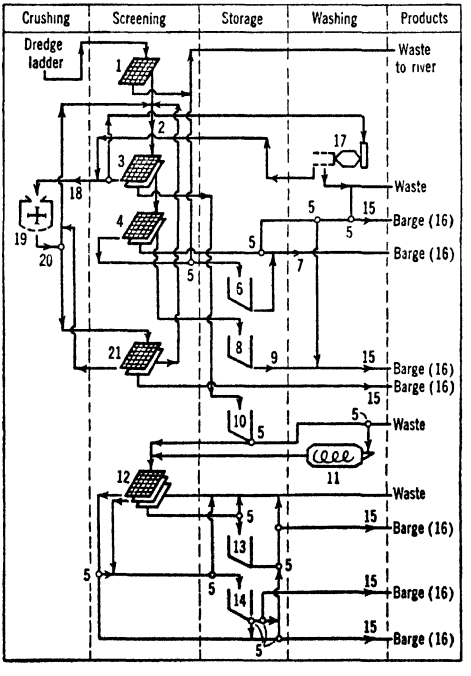

Legend for Fig. 72:

1. Low-head screen, 5-in. aperture. Solid section at feed end covered with 1-in. sheet rubber overlain by a frame of 3×1/2-in. steel skid bars on edge mounted to permit some vertical movement; these and the rubber take the shock of boulders (@ 20-in. max.).
2. Elevator similar to digging string but smaller and lighter; 41-ft. centers.
3. 1 @ 6×14-ft. 2-deck A-C vibrating screen. Perforated plate, 3/4- to 2 1/2-in. apertures on top deck, 3/8-in. on lower. Screen on lower end of upper deck changed according to conditions.
4. 2 @ 5×12-ft. 2-deck A-C vibrating screens, 1/4-in. and 1/8-in. perforated plate.
5. Alternative.
6. Surge bin.
7. 1 @ 24-in.×45-ft. boom belt conveyor.
8. Steel sand tank.
9. Dewatering bucket elevator.
10. Surge bin.
11. 6×18-ft. Allswede 4-compartment revolving scrubber, loaded with 6 tons @ 4 1/2-in. forged-steel balls.
12. 5×12-ft. 3-deck Low-head screen, 3/4-in., 3/8-in., and 1/8- or 1/4-in. apertures.
13. 1 as (6).
14. 1 as (6).
15. 1 @ 24-in.×20-ft. boom belt conveyor, or (7), according to position of barge. 1 No. 7 and 1 No. 15 loading conveyor each side of boat.
16. 500-ton.

FIG. 72. DRAVO CORP., Keystone Sand Division.

Legend for Fig. 72—Continued:

17. 1 @ 7-ft.×48-in. Hardinge conical scrubber with 48-in. dewatering section, 5/8×1/4-in. slots. Used only when there is much clay.

18. 1 @ 24-in.×60-ft. belt conveyor.

19. 1 Pennsylvania C-7-38 Impactor (Sec. 4, Art. 9), manganese-steel hammers and nickel-iron breaker plates, 100-hp. variable-speed (300- to 900-r.p.m.) motor; feed rate, 80 to 90 t.p.h.

20. 1 as (6).

21. 1 @ 5×12-ft. 2-deck Low-head screen, aperture varied according to demand for crushed gravel.

Crude: River gravel with more or less clay.
Products: Crushed and mixed gravels and sands.
Dredge: 4-cu. ft. buckets, 74-ft. ladder, 40-ft. digging depth; 30 buckets per min. = 350 to 400 t.p.h.

Summary. Fine gravels, natural, crushed or mixed, and specification sands made with little storage by use of a variable-speed hammer mill (giving control of fineness), together with changing screen covers, a highly flexible chute and surge-bin system, and some spoilage, permitting blending of running streams. This is an ingenious method of surmounting the lack of the usual storage space available to land plants.

39. SLATE

Properties. The distinguishing characteristic of slate is its ready cleavage along a series of nearly parallel, closely spaced smooth planes. The position of these cleavage planes was determined by the metamorphosing pressures, and is entirely independent of the original bedding of the rock. The chief minerals in slate are present in the following quantities: muscovite, 38 to 40%; chlorite, 6 to 18; quartz, 31 to 45; hematite, 3 to 6; rutile, 1 to 1.5%. Carbonates, graphite, biotite, feldspars, pyrite, and a variety of other minerals may also be present in minor quantities.

As a structural material, hardness, crushing strength, and density are considerations for slate as for other building stones. Special properties are its wide range of color and tint, permanence of color, cleavage and grain, possible shear zones or cross cleavage (which may cause the stone to form irregular worthless slivers), jointing, bedding (which may cause breakage or undesirable changes in color), and heat and electrical conductivity or resistivity.

Uses are indicated in Table 25. Roofing is the leading use. Structural and sanitary slate includes baseboards, stair treads and risers, mantels, sinks and dripboards, shower and toilet stalls, etc.; slate pencils are included under school slates, a declining item. Granules are used in banded briquettes as well as for surfacing flexible shingles and roll roofing. Pulverized slate or flour is used as filler in roofing, mastic, paint, linoleum, rubber, and molded electrical goods, and as a mild abrasive in soaps and polishes.

Table 25. Slate sold by producers in the United States, 1928 and 1937

Use	1928 (peak year)		1937			
	Equivalent short tons	Value	Sq. ft.	Equivalent short tons	Value	Average per ton
Roofing slate	177,310	$ 5,411,332	365,800	137,400	$2,728,109	$19.86
Millstock:						
Electrical slate	10,990	1,025,386	594,660	5,140	444,887	86.55
Structural and sanitary slate	19,990	1,034,818	997,860	8,080	322,974	39.97
Grave vaults and covers	5,060	136,836	324,680	2,940	73,017	24.84
Blackboards, bulletin boards	9,450	1,079,452	1,651,010	4,400	357,043	81.15
Billiard-table tops	2,550	109,221	47,020	350	15,794	45.13
School slates	740	22,591	578,930	570	11,930	20.93
Total millstock	48,780	$ 3,408,304	4,194,160	21,480	$1,225,645	$57.06
Flagstones, etc.	6,290	184,184	1,215,490	8,670	73,554	8.48
Total slate as dimension stone	232,380	$ 9,003,820	.....	167,550	$4,027,308	$24.04
Granules and flour	413,980	2,468,471	.....	277,010	1,578,014	5.70
Grand total sales	646,360	$11,472,291	.....	444,560	$5,605,322	$12.61

Occurrence. Commercial slate is found only where the original strata were largely clayey and subsequent earth movement has been sufficient to induce recrystallization. Shales in the central Mississippi Valley, for example, have not been folded intensely enough to yield slate.

An ideal deposit should have little or no overburden and should yield a minimum of water. The strata should stand nearly vertical; if the slaty cleavage is nearly flat and parallel to the strike, quarrying is greatly simplified. In horizontal beds waste may be excessive and selective quarrying may be impossible; if the cleavage dips too steeply, quarry blocks may not easily be wedged loose from the floor.

Production. The United States, Great Britain, Belgium, and the U.S.S.R. have been the largest producers of commercial slate, roughly in the order named, but slate is quarried in many foreign countries. Domestic output is centered chiefly in eastern Pennsylvania (two districts) and nearby Maryland, the Vermont-New York district, Virginia, and Maine; production in other states is relatively small.

Selling. Freight rates largely fix the market range of slate products worth less than about $50 a ton (see Table 25). The price per square of roofing slates varies with the district and with the size, larger sizes being worth more; the national average in 1938 was $6.98 compared with $7.47 in 1937, and $11.20 in 1928.

Treatment. For roofing-slate manufacture the blocks are split with chisel and mallet until slabs $^3/_{16}$ or $^1/_4$ in. thick are obtained. These are trimmed to standard sizes with a heavy blade operated with a foot treadle or with a power-driven rotary trimmer that

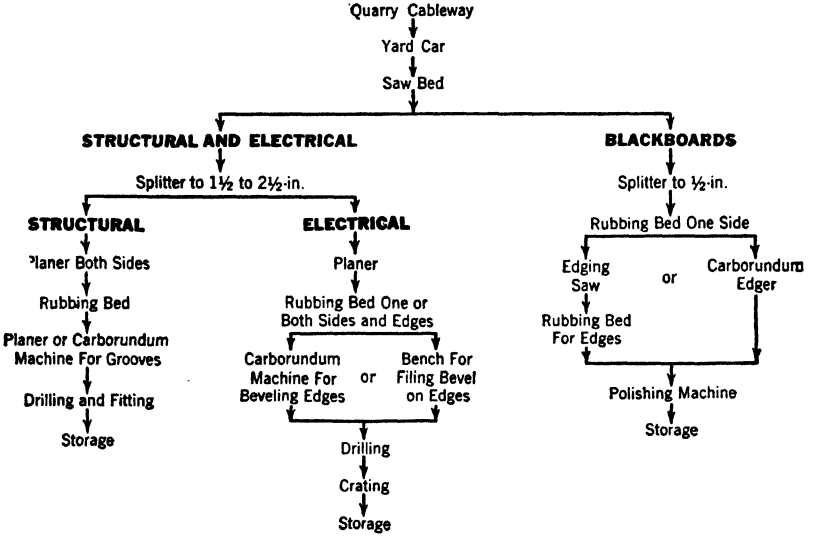

FIG. 73. Mill for structural and electrical slate.

embodies the shearing action of a lawn mower. Slate for the manufacture of blackboards, electrical panels, and structural products (Fig. 73) first is split to the approximate thickness desired and then smoothed and reduced to uniform size by planers, rubbing beds, and surfacing machines similar to those used in marble mills (Art. 40). Carborundum wheels generally are used for COPING (trimming edges of slabs and cutting them into strips).

The manufacture of granules for surfacing prepared roofing is partly a branch of the slate industry, but other materials, such as trap rock, rhyolite, silica, and burned clay are also used for granules. The object of the milling process is to prepare a clean product ranging from 8- to 35-m. in size and to make as small a proportion of fines as possible, since these are largely unmarketable. The final granules should be dust-free. Early mills comprised graded crushing in jaw crusher and rolls operated dry, with intermediate scalping of limiting-screen undersize, but modern plants treat the production problem as one of making stone sand, drying, and screening out the granule cut dry. In either case, the recovery of 10~35-m. material will rarely run above 50 to 60% of the crude, and use must normally be found for the finer materials, if the plant is to be in a competitive position in the field. Raw materials are carefully selected as to color, but granules are also colored artificially, and the synthetic colors are gaining in popularity.

40. STONE, DIMENSION

Properties. Stone used in construction of walls is of four main types, *viz.*, cut or finished stone, ashlar, rough building (or monumental) stone, and rubble. Only the first is accurately shaped to dimension. Ashlar, however, is sawed, planed, or otherwise trimmed to rectangular blocks. Paving

blocks, curbing, and flagging are also classed as dimension stone, but RIPRAP (large, irregular blocks used for shore protection and the like) is classed ordinarily with crushed and broken stone.

Principal varieties of dimension stone are granite, sandstone, limestone, and marble. Slate (Art. 39) and limestone (Art. 24) are usually classed separately. Relatively few rock occurrences can be utilized as dimension-stone quarries. No deposit that has closely spaced cracks, lines of weakness, or joints can be so used, because only sound blocks of moderate to large size can be marketed. Uniform texture and grain size, constant and attractive color, and freedom from impurities that may cause stains or deterioration further affect the utility of a deposit. Hardness has little influence on use except as it affects workability. Even strength is usually disregarded, since any sound structural stone is many times stronger than necessary for any ordinary service. The base course of the 550-ft. Washington Monument, for example, carries a load of only 700 lb. per sq. in., and most structural stones will sustain a crushing load of 10,000 to 25,000 lb. per sq. in. Porosity ranges from 1 to 10% for commercial sandstones, 0.5 to 5% for limestones; other rocks usually under 0.1%. Weights per cu. ft. range from 140 to 180 lb. Great variation is shown in the endurance of stones. Tests of enduring qualities are now made in laboratories by repeated freezing and thawing, and no reliable quarryman will ship exterior stone that fails to pass the most rigid of such tests. However, conditions of outcrops that have been exposed for countless years may afford even better evidence as to resistance to weathering. Igneous rocks as a class suffer most from temperature changes, calcareous sandstones and limestone from acid atmospheres.

Occurrence. Granite deposits usually are fairly uniform over considerable areas and are deep. Sedimentary rocks naturally vary in attitude and may be less persistent, requiring more careful exploration. Marble, soapstone, verde antique, and other metamorphic rocks are even more irregular in extent and quality.

Production. Principal granite-block-producing states in order of value of production in 1938 were Vermont, Massachusetts, Georgia, Maine, and Minnesota. Roughly half the quantity and two-thirds of the value of all building limestone is produced in Indiana. Ohio is by far the leading source of sandstone, New York and Pennsylvania being the only other important producing states. Tennessee leads in marble, but by no wide margin over Georgia and Vermont. See Table 26.

Table 26. Dimension stone sold or used by producers in the United States (by kind)
(MY)

	1929		1932		1937		
	Short tons	Value	Short tons	Value	Cubic feet	Short tons	Value
Building stone	2,647,410	$43,905,123	1,295,590	$20,184,566	7,950,860	608,200	$11,977,753
Monumental stone	366,230	15,848,126	168,050	6,244,654	3,018,210	249,050	8,426,623
Paving blocks	300,360	2,942,991	71,860	620,178	.....	73,900	781,259
Curbing	336,360	3,843,961	79,840	926,190	1,219,100	98,390	1,139,206
Flagging	87,750	666,987	26,450	206,552	627,010	50,330	509,014
Rubble	907,810	1,324,681	179,100	195,650	.....	801,360	1,498,682
	4,645,920	$68,531,869	1,820,890	$28,377,790	.....	1,881,230	$24,332,537

Many foreign building and ornamental stones are used in this country as well as abroad. Notable examples are Italian, French, Belgian, English, and African marbles; Italian travertine; Mexican onyx; and the granite of Scotland, Finland, Norway, and Sweden.

Selling. The average prices of cut, sawed, and finished building stone in the United States as reported by producers tended to decline after 1929. In 1938 the average per cu. ft. for finished building marble was $5.47, for granite $3.39, and for sandstone, $1.48. Prices of monumental marble have fluctuated from $3 to $5; for 1938 the figure was $4.77. Monumental granite averaged $2.70 per cu. ft. in 1938, compared with $3.75 in 1929; for dressed stone only, the average in 1938 was $6.96, compared with 90¢ per cu. ft. for rough stone.

Inasmuch as the stone from no two quarries is exactly alike, specifications relate chiefly to workmanship and surface finish. The choice of color, texture, or general appearance is made by architects and builders to suit the design of the building. The American Association of State Highway Officials, however, has issued specifications for ashlar and rubble to be used in bridges and incidental structures —chiefly in relation to soundness, durability, and freedom from seams, cracks, or other defects. Patterned floors require tile of different colors that blend well and that do not differ too greatly in resistance to abrasion. Stone for sanitary uses should have a low ratio of absorption; this is also desirable for marble floorings, to resist staining. Stone for laboratory use should resist chemical action.

Dimension stone is often sold in rough blocks directly to dealers or manufacturers. Some quarry men, however, have mills where they saw blocks and so can sell either slabs or rough blocks to dealers or manufacturers. Most of the largest structural-stone companies have their own finishing mills and so can take contracts for whole structures and fabricate according to specifications. Monumental granite is mostly sold in rough blocks to manufacturers of memorials, although a few important quarry units turn out finished monuments. Monumental marble is usually manufactured by producing companies and sold to the retail monument trade. Paving stones and curbing are sold direct to contractors or municipalities, or through dealers.

Treatment. In limestone, sandstone, and marble mills, quarry blocks are sliced by GANG SAWS, which are soft-iron blades set in a reciprocating frame and fed with sand or steel abrasive. Subsequent cuts are made chiefly with diamond- or carborundum-toothed circular saws. Further smoothing of slabs may be done on planers similar to those used in machine shops. Still smoother surfaces are obtained on a RUBBING BED, a flat rotating cast-iron table 12 to 16 ft. in diameter. The block or slab of stone is held by a stop or barrier and bottom surface is ground smooth by sand and water fed onto the top of the table. Carborundum machines are widely used for cutting cornices, moldings, bevels, etc.; carving is done by pneumatic tools or sandblasting (rarely by hand).

Granite, being so much harder, used to be split to approximate dimensions by drilling and wedging and then smoothed roughly by surfacing machines consisting of powerful pneumatic hammers that chipped the surface, much as a rock-drill bit cuts into a drill hole. In modern mills, however, even granite is cut by gang saws or circular saws with steel shot as abrasive. Rubbing beds are not used for granite, but the principle is the same except that the buffing machine has a power-driven rotary head which is guided over the surface of the stationary stone, wearing it down with successively finer grades of steel shot, carborundum grit, or emery. Final polishing is done with a buffer-head charged with PUTTY POWDER (fine-grained SnO_2). Carborundum machines are used for irregular cuts, but must be guided carefully and kept supplied with plenty of water. Sand-blast carving is particularly adapted to granite. The stone is covered with a rubberlike dope which is cut away with a scalpel to form the design before the sand blast is turned on.

41. STONE (CRUSHED)

Properties and uses. About two-thirds of the crushed and broken stone produced in the United States is limestone; basalt or trap rock (diorite and other dark igneous rocks) is a poor second. Granite, sandstone, and miscellaneous stones of various kinds are all employed. Apart from its mineralogical character, crushed stone may be classified according to its physical and chemical properties, cleanliness, and gradation (see Table 27). For uses of crushed limestone see Art. 24. Other kinds of crushed stone are used almost entirely for riprap, concrete, and road metal or railroad ballast. Slate and other granules are used for roofing and similar decorative purposes (Art. 39). Miscellaneous uses of crushed stone include terrazzo, sewage, filter beds, asphalt and other fillers, and stone sand. Trap rock has a high reputation for road construction and finds its main outlet in that field. Granite is

Table 27. Average physical properties of rocks (*U. S. Dept. Agr., Misc. Publ.* 76, *Bur. Public Roads*)

			Weight, lb. per cu. ft.	Per cent. of wear *a*	Hardness *a*	Toughness *a*
I. Igneous	1. Intrusive (plutonic)	a. Granite	167	4.3	18.3	11
		b. Syenite	171	3.3	18.3	15
		c. Diorite	179	3.0	18.2	17
		d. Gabbro	185	3.0	17.7	14
		e. Peridotite	182	4.0	14.2	11
	2. Extrusive (volcanic)	a. Rhyolite	159	3.7	18.3	19
		b. Trachyte	170	2.9	18.1	24
		c. Andesite	166	3.9	17.0	18
		d. Basalt and diabase	177	3.0	17.1	18
			186	2.4	18.0	22
II. Sedimentary	1. Calcareous	a. Limestone	165	5.0	14.1	9
		b. Dolomite	170	5.5	14.9	9
	2. Siliceous	a. Shale	.....	.....	.....	.....
		b. Sandstone	164	6.2	14.4	10
		c. Chert (flint)	159	9.4	18.2	12
III. Metamorphic	1. Foliated	a. Gneiss	172	4.9	17.4	10
		b. Schist	180	4.7	16.6	13
		c. Amphibolite	188	2.8	17.5	19
	2. Nonfoliated	a. Slate	.....	.....	.....	.....
		b. Quartzite	169	3.2	18.8	18
		c. Eclogite	194	2.4	18.4	22
		d. Marble	173	5.7	13.1	6

a See p. 107.

not used so much for highways as for concrete, railroad ballast, and riprap. Sandstone is employed to some extent for road base, but more for other uses.

Production in the United States, exclusive of that used for making cement and lime, was 123,072,820 short tons in 1938 (Table 28), compared with 131,262,010 in 1937, and an all-time peak of around 145,000,000 tons in 1929. Including stone used for making cement and lime, the 1938 total was 155,950,000 tons. Production of aggregates only (concrete stone, road metal, and railroad ballast), however, reached a peak in 1938 of 94,763,050 tons valued at $88,767,221 due to an increase in noncommercial operations (by Federal and local government bodies) to 34,508,880 tons purchased at $35,785,401. See also Sec. 1, Fig. 1.

Table 28. Crushed or broken stone sold or used by producers in the United States in 1938, by kinds and uses *(MY)*

	Riprap		Concrete		Railroad ballast		Flux (Limestone and marble)	
	Short tons	Av. value	Short tons	Av. value	Short tons	Av. value	Short tons	Av. value
Granite	1,368,680	$1.44	6,635,270	$1.15	1,628,940	$0.88	.....	.....
Basalt	1,248,510	0.99	12,089,620	0.89	528,810	0.90	.....	.....
Marble	.....	.....	.....	.....	.....	.....	10,730	$0.91
Limestone	2,590,770	1.20	54,357,130	0.96	3,187,770	0.69	9,692,130	0.72
Sandstone	597,050	0.91	4,630,790	1.04	214,460	0.87	.....	.....
Miscellaneous	405,510	0.95	11,074,270	0.78	415,990	0.59	.....	.....
	6,210,520	$1.13	88,787,080	$0.95	5,975,970	$0.76	9,702,860	$0.72

	Refractory		Agriculture		Other		Total	
	Short tons	Av. value	Short tons	Av. value	Short tons	Av. value	Short tons	Av. value
Granite	.....	.....	.....	.....	127,460	$0.80	9,760,350	$1.15
Basalt	.....	.....	.....	.....	20,000	0.75	13,886,940	0.88
Marble	.....	.....	.....	.....	119,660	2.21	130,390	2.11
Limestone	263,930	$0.41	4,367,410	$1.29	6,516,470	1.04	80,975,610	0.96
Sandstone	381,110	1.59	.....	.....	324,900	1.44	6,148,310	1.07
Miscellaneous	14,650	7.65	.....	.....	260,800	1.89	12,171,220	0.81
	659,690	$1.50	4,367,410	$1.29	7,369,290	$1.10	123,072,820	$0.95

Occurrence. Igneous rocks are most abundant in rugged territory, and the largest areas are those least used, being traversed by few highways or railroads and remote from large population centers. Chief developments are in outcrops, often isolated and comparatively limited in extent, near large cities. Granites and other coarse-grained igneous rocks are utilized extensively in New England and southward following the Appalachian Mountains, and in Wisconsin and California. Trap rocks, finer grained, are used extensively in Connecticut, Massachusetts, New Jersey, New York, Pennsylvania, Washington, and California. Light-colored igneous rocks (trachyte, andesite, rhyolite, and tuff) are found principally in Rocky Mountain and Western States, about half the miscellaneous stone being reported from California. Igneous deposits by nature are more uniform in quality, usually stand out on higher ground, and are covered with less overburden. However, the rock near the surface may be inferior owing to weathering. Limestones in general are associated with low valleys and heavier overburden. They are less uniform, more distorted by folds. Favorable localities for local deposits can often be predicted from State and Federal geological reports, so that a study of transportation facilities can be made before actual prospecting in the field.

Selling. Average prices f.o.b. plant as reported by Bureau of Mines usually range from around 75¢ per ton for railroad ballast to about $1 for carefully sized concrete and road material. Riprap may sell for less than 50¢. Asphalt filler and powdered limestone may bring upward of $2 per ton. Markets must be nearby, seldom more than 50 to 100 miles away. Transportation charges are often more than the price at bin. Since stone is widely distributed, small roadside quarries may be opened temporarily, if a job is too far from existing plants. Acceptance is usually at the point of delivery, hence rejection losses for unsuitable stone may include delivery, unloading, and handling, as well as plant costs. Demand is highly seasonal; very little stone moves in winter except in Southern and Pacific States. In early spring, highway demand is relatively greater first for smaller sizes for patching winter damage, and later for the surface-chipping and oiling programs before heavy tourist travel begins. Larger sizes for concrete and new road surfacing are in greater demand later in the season after grading is completed and before freezing weather arrives.

Definite progress has been made in the elimination of unnecessary variations in specifications. Federal and State Government specifications are usually standard for a given locality, but are changed

from time to time. Heavy irregular fragments are used for riprap; dense and less soluble igneous rocks are best suited for this service, but since the main requirement is low price, large quantities of limestone are so used. Owing to local variations in available rock deposits, character of traffic, and climatic conditions, no standard specifications can be given for concrete aggregate and road metal. The most important qualities for highway use are wear and toughness. The FRENCH COEFFICIENT

Table 29. Uses of standard sizes of crushed stone (*after Goldbeck*)

Nominal size of square opening, in.	Circular equivalent, in.	Uses of different sizes
2 1/2~3 1/2	3~4 1/4	Water-bound macadam (soft stone)
2~3 1/2	2 1/2~4 1/4	Water-bound macadam (soft stone) Bituminous macadam (soft stone)
1 1/2~2 1/2	1 3/4~3	Bituminous macadam (hard stone) Railroad ballast (soft stone) combined with 3/4~1 1/2
1~2	1 1/4~2 1/2	Water-bound macadam (hard stone) Bituminous macadam (hard stone) Special cold mixes Railroad ballast, combined with 3/4~1 1/2
3/4~1 1/2	7/8~1 3/4	Choke stone for 2- to 3 1/2-in. stone, bituminous macadam Trickling filters Railroad ballast combined with 1~2 or 1 1/2~2 1/2
1/2~1	5/8~1 1/4	Choke stone for 1 1/2- to 2 1/2-in. stone, bituminous macadam Special cold bituminous mix Mixed-in-place bituminous surface Railroad ballast, combined with 1~2 (hard stone)
No. 4~2	1/4~2 1/2	Concrete highways Mass concrete Bituminous concrete
No. 4~1 1/2	1/4~1 3/4	Concrete aggregate Bituminous concrete
No. 4~1	1/4~1 1/4	Reinforced concrete Unit concrete Traffic-bound roads Bituminous concrete Sheet-asphalt binder
No. 4~3/4	1/4~7/8	Reinforced concrete Unit concrete Traffic-bound roads Coarse screenings for surface treatment Choke stone for 1- to 2-in. stone, bituminous macadam Bituminous concrete, fine graded
No. 4~1/2	1/4~5/8	Reinforced concrete Unit concrete Traffic-bound roads Fine screenings for surface treatment Bituminous concrete, fine graded Special cold bituminous mix
0~No. 4	0~1/4	Fine aggregate Screenings for water-bound macadam

is an arbitrary way of expressing WEAR; it is equivalent to 40 divided by the percentage wear resulting from rotating a 5-kg. sample in a closed cylinder for a specified period. In the RATTLER TEST, large cast-iron spheres are used to accelerate the wear. TOUGHNESS is resistance to impact, ordinarily measured by the PAGE TEST on a cylindrical core of the sample. STRENGTH is resistance to fracture under steady pressure. SOUNDNESS is considered in relation to weathering. The SODIUM SULPHATE TEST simulates freezing and thawing action by causing crystallization of the salt within pores of the rock. Closely sized samples are soaked in saturated solution at constant temperature for 18 hr., dried at 105° C. to 110° C., and then cooled to room temperature. After repeating the soaking and drying a specified number of times (usually 5), specimens are washed free of salt, dried, and screened again. The amount passing the same sieves on which the sample was retained before test gives desired

information. Additional information on portions of sample 3/4-in. or larger is noted as to number of pieces showing disintegration, splitting, crumbling, cracking, or flaking. Magnesium sulphate may be used in like manner but gives widely different results; in fact, no soundness test other than actual service is considered conclusive.

Size specifications as listed by Goldbeck (*Oct. 1931 Crushed Stone Jour. 5*) are shown in Table 29.

Treatment. Owing to frequent changes in specifications, flexibility of operations, permitting production of a variety of sizes and mixtures, and provision for segregated storage are desirable. Hand loading is still practiced in quarries where selection of stone is necessary, also in small plants.

Crushing. Blake-type crushers and gyratories are usually used for primary breaking of hard rocks, single-roll jaw crushers for the softer limestones and other nonabrasive rocks. Corrugated jaw plates on jaw crushers are normally used to compensate for the supposed tendency of the machine to produce slabby pieces, equiaxed fragments being most desired because they tend to increase the workability of concrete. Secondary crushing is usually in reduction gyratories or standard cones. Fine crushing is practiced increasingly, cones or rolls being used for hard rock and hammer mills for material not too abrasive. Stone sand and dust (mostly limestone) may be made in hammer mills, but ball, rod, tube, ball-bearing, and roller (edge-runner) mills are also used, especially on harder rocks. Wet-grinding is used only for coarser sands and then only if the finest material is to be discarded.

Screening. Trommels are still the usual choice for screening in small plants, because they are low in first cost and serve as distributors over the bins, simplifying design. In large modern plants revolving screens are used principally for scalping of larger sizes preliminary to crushing or following revolving scrubbers. Vibrating screens are preferred for openings of 1-in. or smaller and are used for much larger rock (see Sec. 7, Art. 9). Bar grizzlies are used for scalping where accurate sizing is not required; some plants use live-roll grizzlies.

Washing has become increasingly important. Fishtail sprays over screens suffice for removing small amounts of dust, but to break up tough clay, log washers or blade mills are used. Intermediate are various types of revolving scrubber sections on revolving screens. Recent conical and cylindrical scrubbers operate like ball mills, grinding clay balls with the stone itself.

Storage. Large ground-storage areas are commonly needed since storage bins for more than one day's run are expensive. The major portion of output is shipped as produced, consequently stock piling is practiced not so much to meet future demands as to balance variations in demand for different sizes. Careful dumping in layers or other suitable precautions are necessary to avoid segregation.

Portable plants have been devised to meet need for wayside quarries for jobs too far from commercial plants. They consist normally of a small crusher, an elevator, a sectional revolving screen, and one or two stacker conveyors. In addition to saving trucking costs on long hauls, these light plants can be shifted from point to point of the deposit, facilitating selective quarrying (see Sec. 4, Art. 12).

Shape of particles to be used in concrete aggregates is an important part of the specification in many large contracts. FLATS and SLIVERS, usually defined as particles with a maximum dimension 5 or more times the minimum dimension, are usually limited to 5 or 10% of the total. But the method of determination of such content is not standardized, with the result that a given product rejected on a 10% tolerance by one inspector may pass a 5% tolerance with another inspector. In part this is due to the substantial impossibility of sampling a coarse aggregate to obtain a sample small enough in bulk to permit economical testing even by machine screening (see Sec. 19, Art. 1).

Testing. Progress toward a standard test (which assumes a proper sample) trends toward rescreening of oversize made on a square-mesh sieve on rectangular-mesh sieves with apertures ranging up to 10 or more times the width, with some provision for aiding passage by hand in the case of the coarser sizes. Actually such tests are substantially meaningless in the coarse sizes, and it is probable that even in fine sizes skilled visual inspection or, better, counting of an actual sand or a photograph thereof gives a more accurate picture of shape distribution.

Effect of flats and slivers in coarse aggregates is by no means clearly established. The usual assertion is that such pieces assume positions with long axes horizontal in pouring concrete and consequently produce voids underneath them; that they tend to concentrate in the surface and, being there, fail and cause surface failure, etc. But the supporting evidence is not strong, and there is much *contra*. If the whole aggregate were flat, *e.g.*, if made with slate or schist or some slabby gravels, there is no doubt that a pour would contain many voids, but such an aggregate is very different from anything producible from a reasonably homogeneous rock by any crushing method.

The case against slivery sand is well established in that sand-cement mixtures with equiaxed grains are definitely more fluid than those with a high percentage of slivers, and consequently can be more heavily loaded with sand for a given penetrability into the pores of the coarse aggregate in pouring a concrete mix. The resulting saving in cement justifies insistence on equiaxed sand.

Production of equiaxed grains from a given rock depends in part on the crusher used and in part on the method of operation. Large reduction ratios tend to produce a more slabby coarse aggregate than small reductions. This follows from the fact that large reduction ratios go with large nip angles in most crushers, and that the first breakage in such cases consists in slabbing off corners into pieces that usually are not nipped again.

and consequently do not suffer the cross breaks necessary to reduce them to equiaxed particles. With small reduction ratios the break surfaces radiate from the points of application of the load toward the interior of the particle, with many forks making relatively large angles with the initial surfaces and with each other, which tends toward an equiaxed product. Any machine, therefore, so built or so operated as to load the particle to be broken in such a way that the lines of action of the loads run toward the center of the particle will tend to produce equiaxed breaking, and *vice versa*. Large throw tends to have much the same effect as large reduction ratio. Choke feeding, which aids nip angle, reduces flats, as does also the use of high circulating loads.

In grinding for equiaxed grains the machine should be of such type and so operated as to accentuate abrasive action, at least toward the end of the grinding operation. This tends to round off corners and thin edges, and while it means that the slime loss may be fairly high, it thereby reduces the amount of nonequiaxed sand. It is effected by crowding the grinding zone to the extent that steel-to-steel contacts are minimized.

Tennessee Valley Authority, Fig. 74 (*148 A 315*).

Location: Hiwassee Dam, N. C.
Crude: Graywacke: Quartz, 65%; mica, 25%; feldspar, 10%; mostly medium grain-size.
Products: See Table 30.

Table 30. Sizing tests of products at Hiwassee Dam

Mesh	Percentages through								
	Cobbles		Coarse rock		Medium rock		Fine rock		Sand
	To storage	After rinsing	To storage	After rinsing	To storage	After rinsing	To storage	After rinsing	To storage
6-in.	95.8	96.8	.....	.....	.....	.....	.....	.....	.....
5	70.3	79.1	.....	.....	.....	.....	.....	.....	.....
4	19.2	36.3	100.0	100.0	.....	.....	.....	.....	.....
3	1.6	9.8	85.8	86.1	100.0	100.0	.....	.....	.....
1 1/2	0.2	3.9	9.4	15.5	97.1	94.1	.....	.....	.....
3/4	.....	2.4	2.2	2.3	36.4	29.7	100.0	100.0	.....
3/8	.....	1.7	1.9	1.0	5.6	2.5	74.3	74.3	.....
4-m.	.....	.....	.....	.....	2.9	0.3	12.8	11.7	99.0
8	.....	.....	.....	.....	.....	.....	3.4	3.0	76.5
14	.....	.....	.....	.....	.....	.....	.....	.....	54.0
28	.....	.....	.....	.....	.....	.....	.....	.....	37.0
48	.....	.....	.....	.....	.....	.....	.....	.....	23.3
100	.....	.....	.....	.....	.....	.....	.....	.....	10.0

Capacity: 530 t.p.h. See also tonnage figures in flowsheet.
Drive: Electrical interlocks separately on primary crushing to storage (items (2) to (4), Fig. 74); secondary crushing-storage (items (5) to (29), Fig. 74); and reclaiming (items (29 out) to (32), Fig. 74). In each section starting is automatically progressive from the output end; and stoppage of any motor in a group stops all motors ahead of it only.
Dust control by hoods at points of maximum dust concentration; exhaust fans where concentration is of medium intensity and the method is applicable; spraying elsewhere to reduce concentration.

Legend for Fig. 74:

1. 3-cyd. shovels; 12-cyd. trucks.

2. 1 @ 42-in. Superior McCully gyratory crusher, 4 3/4-in. set.

3. 1 @ 42-in. inclined belt conveyor.

4. Open storage, 3,000 tons live capacity (15,000 tons total capacity, reclaimable by bulldozer), over concrete conveyor tunnel. Permitted 2- and 3-shift operation of primary crusher during opening-up of quarry, with one-shift operation of balance of crushing plant. Also eliminated the necessity for individual surge bins. Without such a surge pile, average hourly tonnage at Norris was 268 with the same equipment.

5. 36×66-in. heavy-duty Jeffrey-Traylor vibrating feeder; 36-in. inclined (+17°) belt conveyor B; hopper.

6. 1 @ 5×12-ft. 2-deck A-C Low-head screen, 3 3/4-in. and 1 5/8-in. square-perforated plate decks.

7. Adjustable splitter.

8. 1 @ 5 1/2-ft. standard cone crusher with fine bowl, 3/4-in. set.

9. 1 @ 4×8-ft. 2-deck Gyrex screen, 7 1/4-in. and 4 1/2-in. square-aperture cloth.

10. Conveyor C delivering to conveyor B (see 5).

11. Stone ladder No. 1.

12. As (7).

13. 1 as (6), 3/4-in. sq. and 4-m. Ty-rod cloth.

14. 1 as (7).

15. 1 @ 42×48-in. Pennsylvania hammer mill, 700 to 750 r.p.m., 250-hp. motor (coarse-feed); and 1 @ 42×48-in. A-C hammer mill, 890 r.p.m., 250-hp. motor (fine-feed); both without grates.

16. Tilting chute and splitting vane for dividing and directing feed between the two mills (15) as desired. In general the 1 1/2~5/8-in. material was sent to one mill (15) and the 5/8-in.~4-m. to the other with sufficient diversion from one

Legend for Fig. 74—Cont'd:

stream to the other to control the extent of crushing, and thereby the proportions of fine and coarse sand. Hammer wear (0.032 lb. per ton of <4-m. produced) no greater than at Norris Dam, where feed was a tough dolomite containing about 5.5% free SiO_2. This is attributed to elimination of grates at Hiwassee (made possible by friability of graywacke), and to feeding 1 1/2-in. max. instead of 3-in. max. Hammer wear reckoned in terms of energy input at Hiwassee was 0.027 lb. per hp-hr. *vs.* 0.010 lb. per hp-hr. at Norris.

17. Stone ladder No. 2.

18. 1 as (7).

19. 1 as (7).

20. Belt conveyors D and E in series.

21. 1 @ 4×14-ft. Niagara screen, 4-in. sq. opening.

22. 2 @ 4×8-ft. Kennedy-Van Saun screens, 1 7/8-in. openings.

23. 2 FB-4 Jeffrey-Traylor magnetic-vibrator screens, 3/4-in. aperture.

24. 2 @ 4×10-ft. Symons shaking screens, 7/32-in. openings.

25. 1 @ 13-ft. Auto-Vortex bowl classifier; underflow, 40 to 45% solids.

26. 1 @ 12-ft. Dorrco washer.

27. Belt conveyor H; Barber-Greene radial sand stacker.

28. 1 @ 6-in. Wilfley pump throttled to 3 1/2 in.

29. Ground storage, served by a timbered conveyor tunnel 600 ft. long under center; 2 @ 24-in. hand-operated gates for each size of rock and 8 for sand; 1 @ 24-in. reclaiming belt in tunnel.

30. Contains about 1% >10-m. sand.

31. 2 @ 4×14-ft. Low-head screens with 3/16×1-in. staggered slots in 3/16-in. plate; first 4 ft. sprayed; compressed air blowing at discharge end necessary to complete drainage of fine rock.

32. Belt conveyor to mixing plant.

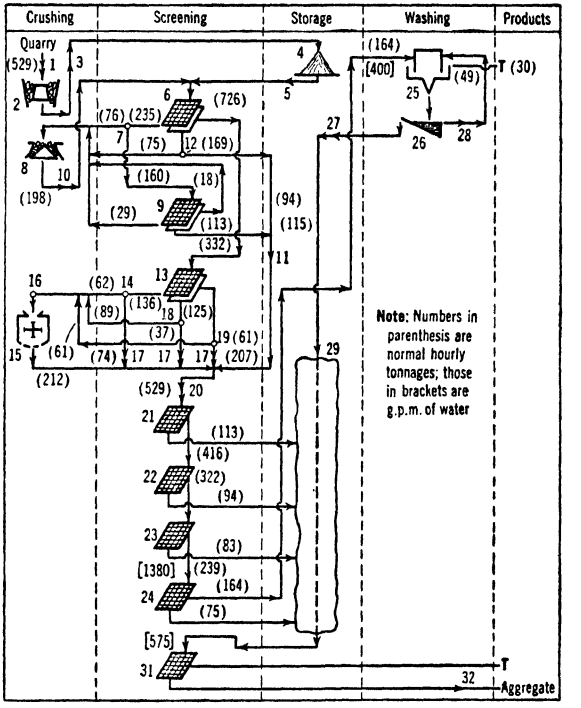

FIG. 74. TENNESSEE VALLEY AUTHORITY, Hiwassee Dam plant.

Summary. Three-stage crushing, with size-distribution control in the second and third stages by splitter recirculation of excess sizes to the crushers. Grading of crushed product into four stone and one sand size by series (as opposed to pyramid) screening and classifier washing in series. Some control of sand-size distribution by variation in load on the two third-stage crushers. All products rinsed out of storage.

Screen capacity is said to be higher than in the NORRIS DAM plant, where pyramid screening (sending a long-range feed first to an intermediate or even the final screen of a series), apexed on the 3/4-in. screen, overloaded it and the following 1 1/2-in. screen with oversize. Also the 4-m. screen at NORRIS was run dry.

Fontana Dam aggregates plant, Fig. 75 (*46 #9 RP 49*).

Location: 35 mi. S.E. of Knoxville, Tenn.

Capacity: 800 t.p.h.

Stone: Quartzite (rather hard), about 80% SiO_2.

Site: A narrow valley of the Little Tennessee River; quarry and primary-crushing plant on one side of river and screening and washing plant on other.

Summary. Two-stage crushing for rock with scalping screens to control amount of secondary crushing; one-stage crushing and open-circuit rod milling for stone-sand. Rock from crushing plant combined and rescreened in rock-grading plant. Rock blended out of storage; sand drawn separately on same reclaiming belt.

Legend for Fig. 75:

1. 3-cyd. shovels.

2. Fleet of 10- and 12-cyd. trucks to crushers at one end of quarry floor.

3. 2 @ 42-in. Superior gyratory crushers, 6-in. open setting.

4. 1 @ 5×9-ft. Jeffrey-Traylor vibrating feeder; 1 @ 42-in. belt conveyor on suspension bridge across river (900 t.p.h.).

5. 1 @ 10,000-ton live, 35,500-ton total stockpile.

6. 1 @ 4×8-ft. magnetic-vibrating feeder; 1 @ 42-in. belt conveyor (800 t.p.h.).

7. 2 @ 5×12-ft. Ty-rock screens in parallel; 6×7 1/2-in. plate and 3 1/4-in. woven-wire surfaces.

8. 2 @ 4 1/4-ft. standard cone crushers (380 t.p.h.).

9. Alternative.

10. 1 @ 36-in. belt conveyor (654 t.p.h.).

11. 2 @ 5×12-ft. Ty-rock screens in parallel, 1 5/8- and 3/4-in. apertures.

12. 2 short-head cone crushers.

13. 1 @ 30-in. belt conveyor (396 t.p.h).

14. 2 @ 6×14-ft. Riplflo vibrating screens; screen aperture varied from 1/4-in. to 3/4-in. according to demand.

15. 1 @ 500-ton surge bin; 2 Syntron feeders.

16. 2 @ 24-in. belt conveyors (131 t.p.h. ea.).

17. 2 @ 9×12-ft. A-C rod mills in parallel; 75,000 lb. @ 3 1/2; 3-, and 2 1/2-in. high-carbon steel rods (3 1/2-in. replacements), 0.6 to 0.7 lb. per ton of feed (= 0.7 to 0.8 lb. per ton of sand produced); manganese-steel liners, 1 @ 800-hp. motor with V-belt drives to the 2 mills. For grind see Table 31.

18. 1 @ 16×5-ft. hydro-bowl classifier (see Table 31).

19. 1 @ 5×30-ft. and 1 @ 7×30-ft. rake classifiers in parallel (see Table 31).

20. 3 @ 36-in. belt conveyors in series (537 t.p.h.).

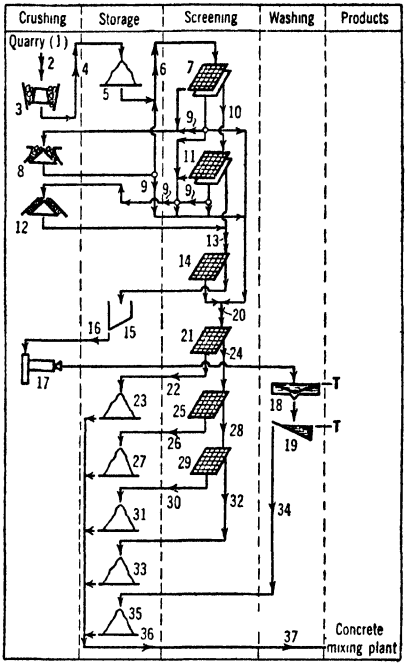

21. 2 vibrating screens, 3 1/4-in. aperture.

22. 2 Barber-Greene stacker conveyors.

23. 17,000-ton stockpile (7,000 tons live).

24. 1 @ 30-in. belt conveyor (146 t.p.h.).

25. 2 vibrating screens, 1 5/8-in. aperture.

26. As (22).

27. As (23).

28. 1 @ 24-in. belt conveyor (245 t.p.h.).

29. 2 vibrating screens, 7/8-in. aperture.

30. 2 as (22).

31. 13,500-ton stockpile (5,100 tons live).

32. 1 @ 24-in. belt conveyor (123 t.p.h.); 1 Barber-Greene stacker.

33. 13,500-ton stockpile (5,800 tons live).

34. 2 @ 30-in. belt conveyors; 1 @ 30-in. stacker (231 t.p.h.).

35. 30,000-ton stockpile.

36. 1 @ 36-in. tunnel conveyor under all stockpiles.

37. 1 @ 36-in. suspended conveyor over river; 2 @ 5×14-ft. Symons screens for rinsing rock (only).

Table 31. Screen tests for rod mills and classifiers at Fontana Dam (percentages)

Mesh	Rod mills		Hydro-separator overflow *a*	Rake-classifier overflow *a*
	Feed	Discharge		
1 1/2-in.	1.1	.....	.....	.....
3/4....	12.8	.....	.....	.....
3/8....	20.8	.....	.....	.....
4-m....	17.2	3.3	.....	.....
8.....	12.2	11.8	.....	.....
14.....	10.5	21.6	.....	.....
28.....	7.6	20.6	.....	0.2
48.....	5.3	13.7	0.1	0.4
100.....	3.4	8.0	0.7	4.9
200.....	2.3	5.3	1.8	14.2
<200.....	6.8	15.7	97.4	80.3

a Combined overflows estimated at 18% of feed to rod mill.

FIG. 75. FONTANA DAM aggregates plant.

New York Trap Rock Corp., Fig. 76 (*33 #26 RP 26; 21 #7 PQ 72*).

Location: Clinton Point, N. Y.

Capacity: 800 to 1,000 t.p.h.

Crude: Trap rock.

Products: 8 sizes: 3 1/4~2 1/2-in., 2 1/2~1 1/2-in., 1 1/2~1 1/4-in., 1 1/4~1-in., 1~3/4-in., 3/4~5/8-in., 5/8~1/4-in., 1/4~1/8-in.

Power: 4,056 connected hp.; about 65% drawn at full capacity. Current comes in at 66,000 volts,

3-phase, 60-cycle; transformed to 23,000 volts for distribution; motors, 440-v. for 25-hp. and smaller, 2,300-v. for larger sizes.

Site: Crushing plant steeply sloping; screening, storage, and washing level. Plant on both sides of N. Y. Central main-line tracks on east bank of Hudson River about 50 mi. from New York City (Fig. 77).

Buildings: Steel and concrete. See Figs. 77 to 86.

Legend for Fig. 76:

1. 7 1/2-ton 5-cyd. side-dump trucks on quarry floor; aver. haul, 750 ft.; 12 trucks can make 240 dumps per hr., aver. is about 100. Trucks are dumped by a hoist-controlled frame on an incline, provided with dependent hook which engages an eye on the truck body.

2. 1 @ 21-in. A-C gyratory crusher, in 40-ft. pit below dumping level, 9-in. open set; 250-hp. motor served by a 40-ton crane with 10-ton auxiliary hoist carrying a disengaging hook for stuck rock.

3. Conveyor, Table 32, see Figs. 77, 83.

4. 3 @ 20(deep) × 16 × 15 1/2-ft. reinforced-concrete surge bins (item *a*, Fig. 79); the 3 @ 42-in. apron conveyors *b* on tracks over cones (5) and (10) roll back to facilitate cone repairs.

5. 1 @ 7-ft. cone crusher, 3-in. set (Fig. 79).

6. Conveyor, Table 32 (Figs. 78, 79).

7. 1 @ 6-compartment 700-cyd. concrete bin (item *a*, Fig. 80); 6 @ 36-in. apron feeders (item *b*, Fig. 80).

8. 4 @ 4 × 20-ft. rotary scalping screens (Fig. 80), 3 1/4- and 2 1/8-rd. apertures; 2 @ 4 × 8-ft. single-deck vibrating scalping screens, same apertures.

9. Conveyor, Table 32 (Figs. 78, 80, 83).

10. 1 as (5), 2-in. set.

11. Alternative.

12. 2 conveyors in series, Table 32 (Figs. 78, 80, 83).

13. 1 @ 40-cyd. surge bin (item *a* of Fig. 81, and Fig. 82); 2 @ 36-in. apron feeders (item *b*, Fig. 81).

14. 4 @ 4 × 10-ft. Gyrex screens (Fig. 81), 2 1/2-in. manganese-steel-wire cloth.

15. 1 @ 50(diam.) × 80-ft. reinforced-concrete silo (Fig. 82).

16. 2 conveyors in parallel, Table 32 (Fig. 82).

17. 4 as (14), 1 1/2-in. aperture (Fig. 82).

18. 1 as (15) (Fig. 82).

19. 1 reversing conveyor, Table 32 (Fig. 82).

20. Open storage between silos.

21. As (16) (Fig. 82).

22. 4 as (14), 1 1/4-in. aperture (Fig. 82).

23. 1 as (15) (Fig. 82).

24. As (20).

25. As (16) (Fig. 82).

26. 4 as (14), 1-in. aperture.

27. 1 as (15).

28. As (20).

29. As (16).

30. 4 as (14), 3/4-in. aperture.

31. 1 as (15).

32. As (20).

33. As (16).

34. As (19) (Fig. 82).

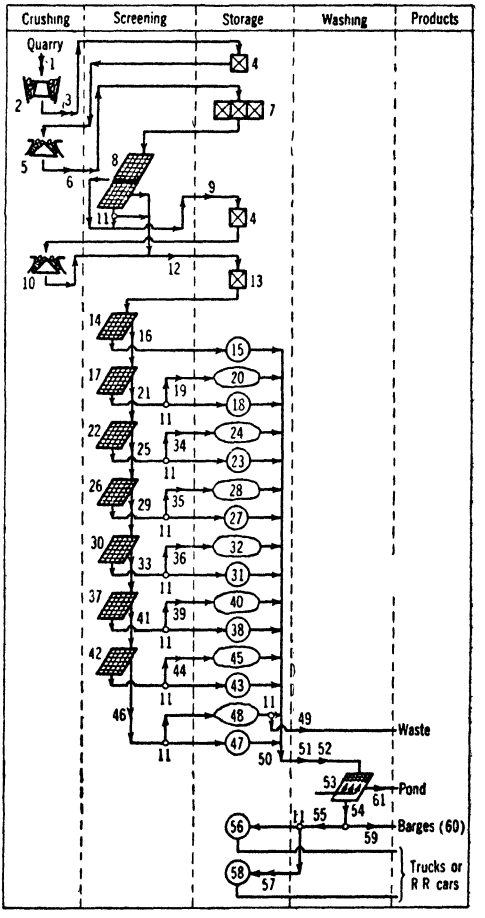

35. As (19).

36. As (19).

37. 8 @ 3 1/2 × 10-ft. Vibrex screens, 5/8-in. aperture.

38. 1 as (15).

39. As (19).

40. As (20).

41. As (16).

42. As (37), 1/4-in. aperture.

43. 1 as (15).

44. As (19).

45. As (20).

46. As (16).

47. 1 as (15).

48. As (20).

Fig. 76. New York Trap Rock Corp.

Legend for Fig. 76—Continued:

49. Excess over market by conveyor 48 (Table 32) to loading bin and thence by truck to a depression behind quarry where it is available for reclamation.

50. 5 gates under each silo and 5 under each open-storage pile (Fig. 82); dead-stored material in open piles dragged to gate hoppers by a 1 1/2-cyd. crawler dragline crane with 80-ft. boom.

51. Tunnel conveyor, Table 32 (Figs. 82, 83).

52. Conveyor, Table 32 (Figs. 83, 84).

53. Screen washer (Fig. 84), comprising 5 steps of fixed screens (1/8- or 1/4-in. apertures) with high-pressure (60-lb.) sprays; 60-ft. fall, 407 sq. ft. of screening surface.

54. Reversible conveyor, Table 32 (Figs. 83, 84). Feeds at one end to (55) and at the other to (59) (Fig. 83).

55. Conveyor, Table 32.

56. 20(diam.)×60-ft. reinforced concrete silo on loading track (Fig. 85).

57. Conveyor, Table 32; traveling tripper (Fig. 85).

58. 7 as (56) in parallel therewith (Fig. 85); (56) and these load out through side arc-type drop-chute gates to cars (one side) or trucks (other side); 20-ton truck scale, 100-ton track scale.

59. Conveyor, Table 32 (Figs. 83, 86).

60. 850- to 900-ton; loaded in 40 min.; take bulk of shipments (Fig. 86).

61. 8-in. centrifugal pump, 1/2-mi. to 10-acre pond; sluiceway for clear water to river; river salts aid clarification.

Table 32. Belt conveyors at New York Trap Rock plant *a*

Ref. No.	Fig. No.	Width, in.	Length, c. to c., ft.	Capacity, t.p.h.	Motor, hp.
3	77, 83	48	448	1,200	200
6	78, 79	48	430	1,500	200
9	78, 80, 83	30	422	450	30
12	77, 78, 79, 80, 83	36	450	1,000	150
12	77, 78, 79, 83	36	301	1,000	150
51	82, 83	48	795	1,500	75
52	83, 84	48	370	1,500	200
54	83, 84	48	104	1,500	20
55	.....	42	316	1,000	150
57	85	36	176	1,000	30
59	83, 86	48	108	1,500	100
16	82	30	112	450 ea.	60
21	82	30	112	450	60
25	82	20	112	260	40
29	82	20	112	180	20
33	82	20	112	150	20
41	82	20	112	150	20
46	82	20	108	130	10
19	82	30	98	450	5
34	82	20	98	260	5
35	82	20	98	130	5
36	82	20	98	130	5
39	82	20	98	130	5
44	82	20	98	130	5
48	.....	20	460	300	30

a Rubber-covered rollers under loading points on wider conveyors; 5-pulley idlers on 48-in., 3-pulley on others, all with roller bearings, Alemite lubricated; drives are all through herringbone reducers with flexible couplings. All conveyors on electrical interlock (see Sec. 19, Art. 6).

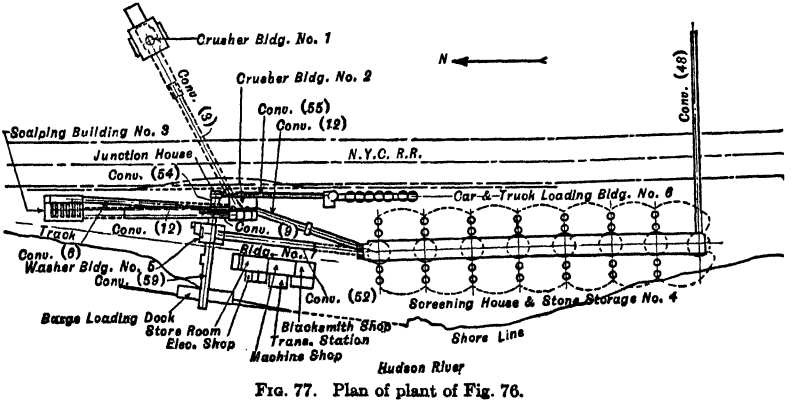

FIG. 77. Plan of plant of Fig. 76.

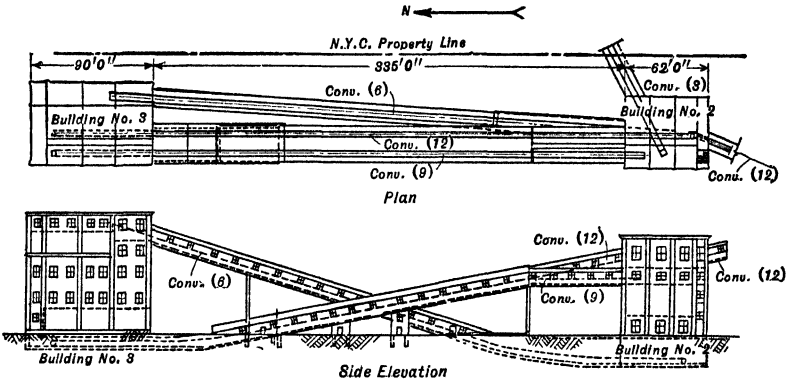

FIG. 78. Secondary-crushing and scalping; plant of Fig. 76.

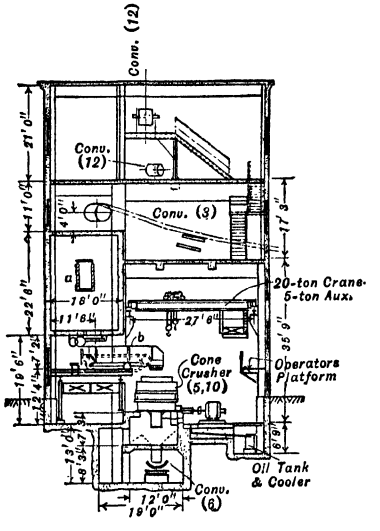

FIG. 79. Secondary-crusher house (Bldg. 2, Figs. 77, 78, 83); plant of Fig. 76.

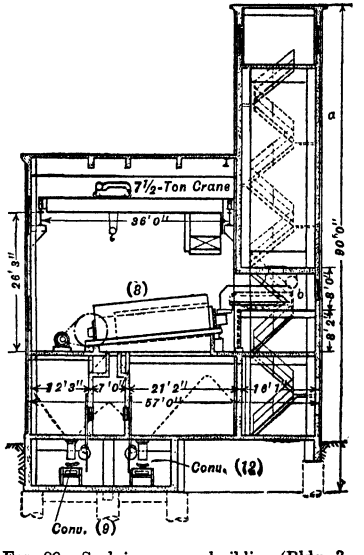

FIG. 80. Scalping-screen building (Bldg. 3, Figs. 77, 78); plant of Fig. 76.

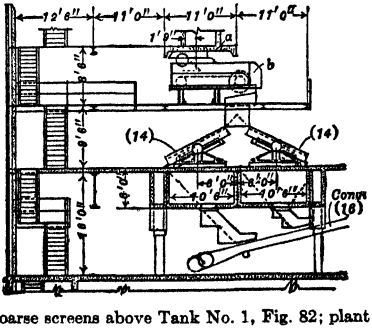

FIG. 81. Coarse screens above Tank No. 1, Fig. 82; plant of Fig. 76.

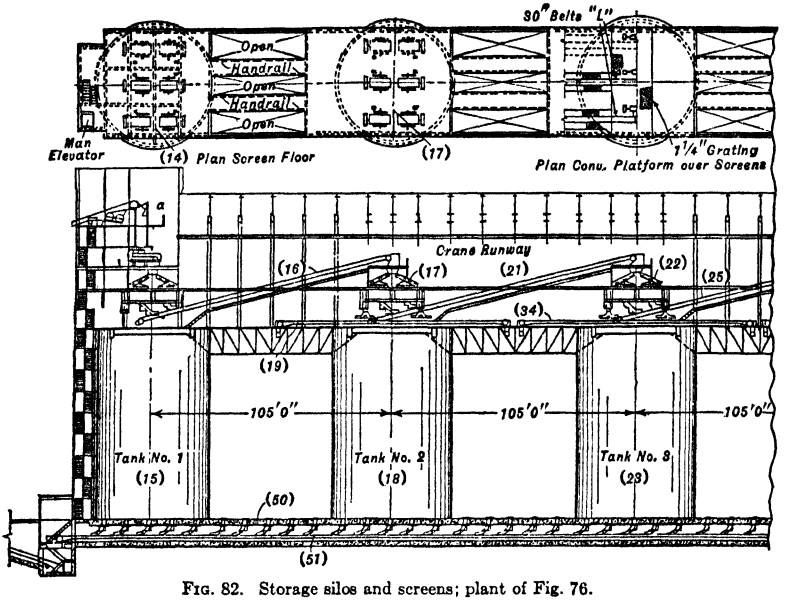

FIG. 82. Storage silos and screens; plant of Fig. 76.

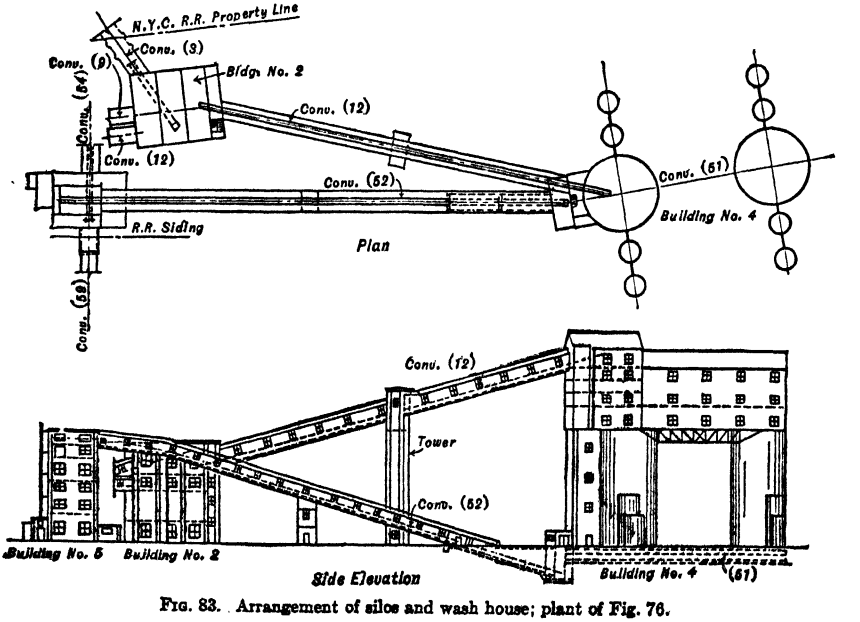

FIG. 83. Arrangement of silos and wash house; plant of Fig. 76.

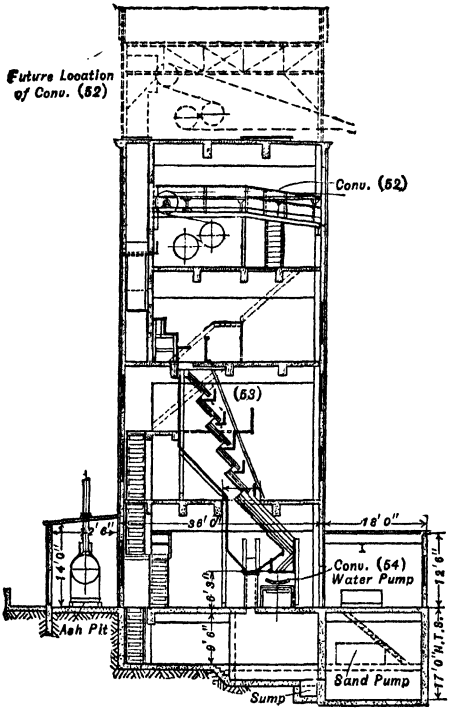

FIG. 84. Wash house; plant of Fig. 76.

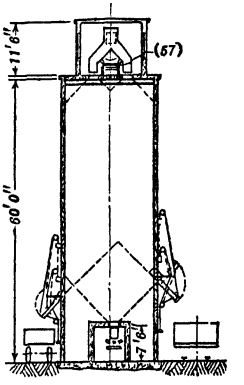

FIG. 85. Car- and truck-loading silos; plant of Fig. 76.

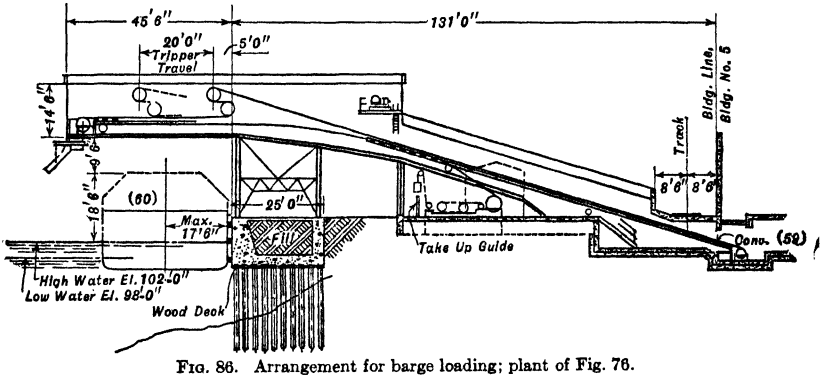

FIG. 86. Arrangement for barge loading; plant of Fig. 76.

Summary. Three-stage crushing in gyratory and 2 cone crushers in series, the second cone operating in open-, partly closed-, or closed-circuit, as desired, with a 2 1/2-in. screen. Crushed product closely sized to 8 grades from <3 1/4-in. to 1/8-in. and stocked. Shipments drawn from stock as wanted, washed, and sent to loading bins for land shipment or to barges.

Dolese and Shepard Co., Fig. 87 (*41 #6 RP 39*).
Location: La Grange, Ill.
Capacity: 15 to 17 t.p.h.
Crude: Limestone chip (5/8~1/4-in.) and <1/4-in. screenings.
Products: Stone sand; coarse and fine dust.
Power: 130 kw. total, average.

Legend for Fig. 87:

1. Separate stockpiles of the two crudes, about 5 1/2% water; 2 1/4-cyd. clamshell bucket; hopper; 50-ft. belt conveyor.
2. 1 @ 6×60-ft. rotary drier, 4 1/2 r.p.m., coal-fired, 270° F., 1 3/4 tons per 8 hr. of 4-in. lump bituminous.
3. Elevator.
4. 1 @ 4×10-ft. 2-deck vibrating screen, 4-m. and 8-m. apertures.
5. Gruendler ring-roll crusher, 1/16-in. bar spacing.
6. Elevator.
7. 1 @ 14-ft. Raymond air sizer.
8. Surge bin.
9. Splitter.
10. 1 @ 10-ft. double-cone Raymond air sizer.
11. 98% <8-m., practically dust-free, 77 t.p.d. Coarser and cleaner with chip feed to plant than when screenings are fed.
12. 75% <100-m., 7 t.p.d.

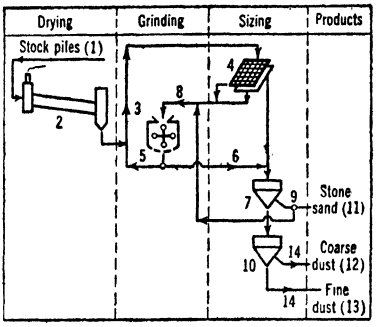

13. 93% <200-m., 28 t.p.d.
14. Bagging machine.

FIG. 87. DOLESE AND SHEPARD CO.

Summary. Dry-process stone sand and dust by drying and hammer-milling in closed-circuit with screens and an air sizer.

Radford Limestone Co., Fig. 88 (*41 #4 RP 34*).

Location: East Radford, Va.
Capacity: 2,000 t.p.d. coarse aggregate stone sand.
Crude: Dolomitic limestone.
Products: Aggregate, 3 1/2~1 1/2-, 1 1/2~3/4-, and 3/4~3/8-in.; washed stone sand, 95% <4-m.; 60 to 75% <16-m., 15% <100-m.; washed fine (<3/16-in.) road stone.

Legend for Fig. 88:

1. Side-dump cars, steam locomotive.
2. 1 @ 42-in. Superior McCully gyratory crusher; 250 t.p.h.
3. 1 @ 36-in. belt conveyor.
4. 1 @ 5×20-ft. revolving stone screen, 1 3/4-in. aperture.
5. 1 @ No. 8K A-C gyratory crusher.
6. 1 @ 30-in. belt conveyor.
7. 1 @ 5×12-ft. 2-deck Niagara screen, 3 1/2-in. and 1 1/2-in. apertures.
8. 1 @ 10-in. Superior reduction gyratory.
9. Storage bin.
10. 1 @ 30-in. bucket elevator.
11. 1 @ 4×14-ft. 2-deck Niagara screen, 3/4- and 3/8-in. apertures.
12. 1 @ No. 25 and 1 @ No. 19 Kennedy gearless crusher, and 1 @ 20-in. Traylor TY reduction gyratory in parallel.
13. 1 @ 4×8-ft. 2-deck Aero-Vibe screen, 5/16- and 3/16-in. openings.
14. 1 @ 6×10-ft. rod mill.
15. 1 @ 3×10-ft. 3-deck Niagara screen, with 60-lb. spray nozzles; 3/4-in., 3/8-in., and 3/16-in. apertures.

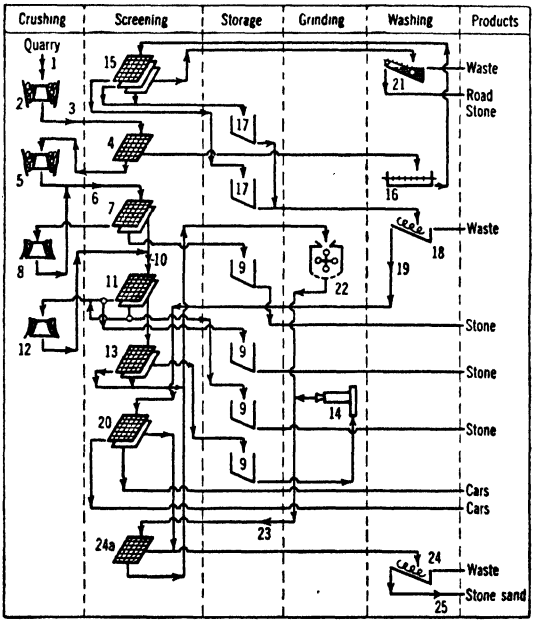

16. Puddler.
17. Soaking bins; retention about 1 hr.
18. 1 @ 20-in. double-screw Link-Belt washer.
19. Bucket elevator, 30-ft. centers.
20. 1 @ 3×8-ft. Nordberg vibrating screen.
21. Sand drag.
22. 1 @ No. 7 Maxecon-Kent mill and 3 @ No. 2 Sturtevant ring-roll mills in parallel.
23. 1 @ 56-ft. bucket elevator.
24. 1 as (18).
24a. Vibrating screen, 3/8-in. aperture.
25. 120-ton steel bin.

FIG. 88. RADFORD LIMESTONE CO.

Summary. Primary crushing to about 6-in.; scalping at 1 1/2-in.; undersize scrubbed, washed, and sized with <3/16-in. rejected; oversize crushed in two stages; excess gravel sizes further crushed and joined with fines for further grinding, screening, and washing to make stone sand.

42. SULPHUR

Properties. Native sulphur (BRIMSTONE) has a distinctive yellow color which may be darkened by impurities; streak is white; luster, resinous; fracture, conchoidal to uneven: hardness, 1.5 to 2.5; sp. gr., 2.05; it is translucent to opaque; melts at 234° to 248° F., depending upon the crystalline state, to a dark amber liquid which boils at 832° F. It ignites in air at 478° F., burning with a distinctive blue flame and evolving SO_2, an unmistakable test. Sulphur conducts heat and electricity poorly. It is insoluble in water, acids, and most liquids other than carbon disulphide, carbon tetrachloride, and the heavier liquid hydrocarbons. If boiling sulphur is quenched suddenly it becomes rubberlike but reverts to crystalline form in a few days. It has other allotropic modifications.

Uses. The largest single use of sulphur is for production of sulphuric acid, the leading domestic uses of which, in turn (*44 CME 78*), were (1936): fertilizer manufacture (20%), oil refining (16%), heavy chemicals (13%), coal products (11%), iron and steel pickling (10%), other metallurgical uses (8%). Large quantities are used also in making paints, explosives, rayon and cellulose films, textiles, sulphite pulp, rubber manufacture (3%), insecticidal dusts and sprays and other agricultural outlets, and for numerous other minor purposes. An excellent pouring cement can be made from molten sulphur and sand, Portland cement, or other aggregate; one of the strongest being 40% S and 60% sand. Pyrite cinder is a valuable source of iron. Principal uses for pyrites are in making sulphuric acid and sulphite wood pulp. Lump ore is burned in deep beds on grates about 5 × 5 ft. much like coal. Fines or "smalls," formerly unsalable, are now roasted in cylindrical multiple-hearth furnace of McDougal type. Latest development is "flash-roasting" of air-floated dust in vertical combustion chamber (*216 CIMM 471*). Pyrite may be a source of elemental sulphur and is also used as source of iron or sulphur or both by smelters but usually such ores contain gold, silver, and perhaps base metals and are not purchased directly as pyrite. Minor uses are in radio crystals, jewelry, and in manufacture of iron pigments.

Occurrence. The primary sources are native sulphur and iron pyrite. Normally, 95% or more of the world's native sulphur comes from sedimentary deposits in which it occurs as irregular masses associated with calcite, dolomite, gypsum, anhydrite, and usually bituminous matter, with occasionally a little barite or celestite. The bedded Sicilian deposits produce a crude with average rock content around 17%. In the Gulf Coast deposits the sulphur occurs in the cap rock overlying salt domes, at depths of 450 to 1,500 ft., generally topped with a cap of anhydrite or anhydrite-calcite layers. They are circular or elliptical in cross-section and range in area from a few to several thousand acres. Thickness of the sulphur in a given deposit ranges from a few inches to 100 ft. The sulphur content may be 50%, but the average is probably not much over 20%. The first such deposit developed (at Sulphur, La.) yielded about 10,000,000 tons of sulphur from 1902 to exhaustion in 1924.

Pyrite occurs widely distributed and abundantly in veins, disseminated deposits, in coal seams, and as masses in contacts. Marcasite is less abundant. Pyrrhotite forms large deep-lying masses in metamorphic rocks, usually near contacts with granite. Pyrrhotite bodies containing copper and/or nickel and platinum-group metals are worked at COPPER CLIFF (Sec. 2, Fig. 144), NORANDA (Sec. 2, Fig. 37), POTGIETERSRUST (Sec. 2, Art. 37). Massive pyrite deposits carrying copper are worked at TENNESSEE COPPER CO. (Sec. 2, Fig. 38) and RIO TINTO; other deposits high in pyrite, the ores of which are treated to recover pyrite as well as other values, are ANACONDA (Sec. 2, Fig. 21), ALDERMAC (Sec. 2, Fig. 30), MIDVALE (Sec. 2, Fig. 124), BALMAT (Sec. 2, Fig. 115), TREPCA (Sec. 2, Fig. 114), etc.

Production. Seven domes in the United States Gulf Coast region now supply about one-third of the world's sulphur and fully two-thirds of the world's production of elemental sulphur, including that recovered in the treatment of pyrite, smelter fumes, and gas manufacture. One dome has yielded 3,000 tons daily for many years. Shipment from American mines for domestic and export consumption averaged 2,104,586 long tons in 1925–29 and rose to a new peak of 2,466,512 long tons in 1937; Texas furnishes 75 to 80% and Louisiana most of the remainder. Italy normally produces 300,000 to 400,000 tons a year. World production of pyrite grew from about 6,000,000 tons in 1900 to 8,000,000 tons in 1929; the estimated sulphur content increased, however, only from 2,704,524 to 3,130,420 metric tons. Spain for many years furnished 50% or more of the world total. Since 1930 production of pyritic sulphur in Japan, Norway, Italy, U.S.S.R., Germany, Finland, and Great Britain increased rapidly, and since 1932 consumption of pyrite in the United States has recovered faster than that of brimstone; domestic production rose to a new peak of 584,166 long tons valued at $1,777,787 in 1937; Tennessee was the leading state, other producers being California, Colorado, Illinois, Kansas, Missouri, Montana, New York, Virginia, and Wisconsin.

Selling. The average price of crude sulphur, f.o.b. mines, during 1925–29 was $17.50 a long ton. In addition to crude, the United States produces treated forms such as crushed, ground, refined, and sublimed sulphur, and flowers of sulphur; exports under this general category have recently averaged $35 to $40 a ton. Sulphur from the Frasch process is guaranteed 99.5 and often runs 99.8% S; it is free of As and Se. Italian sulphur is graded according to content of various inorganic impurities. Chief specifications for flour sulphur cover particle size but the rubber industry further specifies under 0.01% free acid.

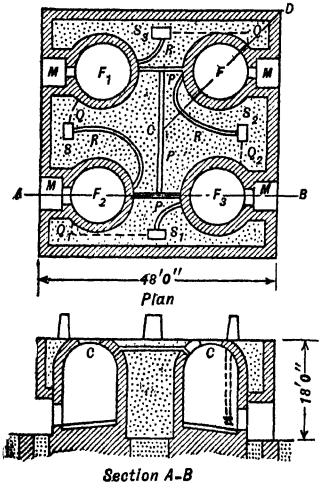

FIG. 89. Gill furnace.

Specifications for pyrite are usually determined by agreement under long-term contract, since each ore has its own peculiarities. Along the Atlantic seaboard Spanish pyrite has been quoted generally at 12 to 13¢ per long-ton unit of contained S. Often sellers contract to take back the cinder. Washed Spanish pyrite contains 48 to 50% S and less than 0.5% Cu, but ordinary Spanish pyrite (CUPREOUS) contains around 47% S and almost 2% Cu. Lump ore ranges in size from 2- to 10-in.; not over 10% should pass 1/2- or 3/8-in. screen. Contracts usually call for a penalty when S content falls below a specified percentage. Zinc and lead are always undesirable. Arsenic over 1% is objectionable for acid manufacture and selenium is objectionable for paper-making. Most of the domestic pyrite is consumed by producing companies. Domestic output was valued at $3.78 per long ton in 1913, $3.75 (average 36.1% S) in 1929, and $3.05 (39.7% S) in 1937, f.o.b. mines.

Treatment. Recovery of native sulphur from the associated rock depends upon the relatively low melting point of sulphur (246° F.) and the relatively high fluidity of the orthorhombic allotrope. Methods of recovery from high-grade products involve simply heating the mixture to a temperature between the melting point and the temperature of inversion (1 1/2° F.) and flowing the liquid sulphur away from the nonmolten associates.

Sicilian sulphur, which is mined in a relatively rich state, is melted by the heat generated in burning a part of the sulphur. The Gill furnace (Fig. 89), normally used for the operation, is a compartmented furnace, normally with 5 or 6 cylindrical domed chambers or compartments *F*, each with a bottom sloping toward a draw-hole. The furnaces are charged by first placing a layer of 12- or 14-in. lumps of limestone on the floor, so arranged as to leave ready channels to the draw-hole, to charge at the center of this base coarse lumps (5- to 10-in.) of crude sulphur in a heap about 3 or 4 ft. in diameter, and then to fill the remainder of the chamber with the finer material (total charge about 30 tons). Flues *P*, with suitable dampers, connect the various compartments, and other flues *Q* and *R* run to chimneys *S*. A cycle comprises the use of 3 chambers, *e.g.*, air for combustion enters, say, *F*, which has been burned and is filled with hot slag; the air is heated in passing over the slag and flows thence through *P* to the top of F_1, operated down-draft, and ignites the top of the charge therein. The combustion gases passing down through the charge in F_1 melt sulphur, and then pass out through bottom flue *Q*, upward through *S* and thence, in part, through *R* and into F_2, downward through the charge in F_2, preheating it, and finally discharge to the atmosphere through Q_1 and S_1. Cycle time on a 30-ton 4-compartment furnace is about 20 days. Recovery in modern forms is about 80% (*30 IEC 742*), the balance being lost by combustion. First-grade product is about 99.5% S; the least pure grade is about 96%.

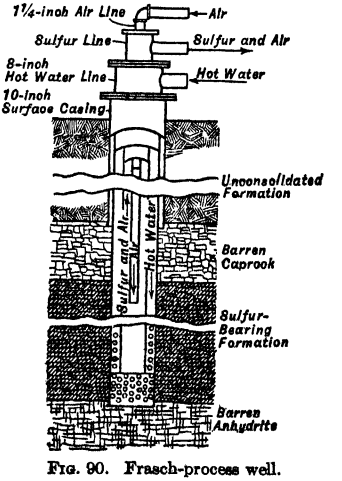

FIG. 90. Frasch-process well.

Frasch process uses water heated under pressure to a temperature upward of 250° F. to melt the sulphur in place underground and to transport it to the surface, where it settles and solidifies in large vats in a high state of purity, and is therefrom mined for shipment, after the walls of the vats have been removed. The essential parts of the apparatus are the wells and piping shown in Fig. 90, the requisite water heaters, compressors, and air

heaters, surface piping and vats. Hot water is pumped down the well at 150 lb. pressure, percolates out through the surrounding rock from the upper holes, and returns with molten sulphur through the lower holes, and thence upward as indicated, lightened by impregnation with heated air. The difficulties involved in the operation are financial and mechanical. A large and costly plant is required; and much H_2S is associated with the sulphur, with corresponding corrosion troubles.

The large size and high purity of the Louisiana-Texas sulphur deposits, the low cost of production, and the accessibility to ocean transport make this sulphur dominant in the world market in so far as dealings are not controlled by politics.

Chilean sulphur (*49 MM 137*) is hand sorted at the pits to about 60% S, and retorted in horizontal retorts charged from heated hoppers above. The sulphur vapors pass from the retort into condensing chambers, which are small when lump sulphur is to be made and large for the sublimed form. Product is 99.5 to 99.8% S. The lump sulphur is ground in fixed-path mills (Sec. 6, Art. 2) with built-in or external separators, using a neutral atmosphere.

Low-grade crudes can be enriched by flotation (Sec. 12, Art. 54) to concentrates assaying 75% S or higher, but not to a point of salable purity. Such concentrate is usually refined by melting in autoclaves with water when, if the droplets do not become coated with the finely divided rock-forming mineral, the melted sulphur runs together and can be flowed out and solidified in an acceptably purified form. Extraction with organic solvents, *e.g.*, CS_2, has also been used for final purification.

Treatment of pyrite. In Spain, ore averaging 48% S and less than 1 1/2% Cu is marketed with no treatment other than screening. Ore containing over 3% Cu is smelted or used to recover elemental S; intermediate grades are leached in heaps for 2 yr. At Ducktown, Tenn., some crude ore is still smelted directly for copper, sulphur gases being sent to acid plant but nowadays the major portion is treated by selective flotation and pyrite concentrates roasted in Herreshoff furnaces, calcines from which go to Birmingham iron and steel manufacturers. In Wisconsin and occasionally elsewhere table concentrates have been lightly roasted and pyrite separated from sphalerite of like specific gravity magnetically. The recent trend is selective flotation, which may increase supplies of by-product pyrites. Coal-washing is also a source of pyrite, especially in Kansas and Illinois.

By-product sulphur may be made from smelter smoke, in purifying manufactured gas, and, of course, from pyrite. At CONSOLIDATED M. & S. Co., Trail, B. C. (*45 CME 483*), dust-free roaster gas is absorbed in wood-slat trickle towers in aqueous ammonium sulphite, thereby changing the sulphite to bisulphite, temperature being held below 40° C. Absorbing capacity is kept up by bleeding off bisulphite solution at a concentration of 5 to 6 lb. SO_2 per gal. and adding aqua ammonia. Solution is filtered through plate presses and then acidified with concentrated H_2SO_4 which, with steam, drives off SO_2 and forms ammonium sulphate. The SO_2 is dried with concentrated H_2SO_4 and reduced with coke. The resulting product is 99.99% S. Ammonium sulphate is a by-product.

43. TALC AND SOAPSTONE

Properties. Talc is commonly assigned the formula $H_2Mg_3(SiO_3)_4$ but its composition varies; even the MgO content may range from 27.9 to 32.4%. Color is white, greenish, or grayish; luster, pearly; hardness, 1; readily sectile; sp. gr., about 2.7. When heated, talc gives off about one molecule of water between 715° and 930° F. without changing its physical structure. Another molecule (combined water) comes off between 1,470° and 1,540° F., absorbing much heat, and initiating inversion to glass-hard enstatite, or clinoenstatite, and SiO_2. It fuses around 2,000° F. The crystal structure is almost identical with that of pyrophyllite. Compact talc (often called STEATITE, though this is strictly the name of a rock) grades into SOAPSTONE, which is a general term for massive material, and covers not only that consisting chiefly of talc but other metamorphic rocks that are soft and greasy in texture. Talc and soapstone both have good electrical properties, resist the action of most acids and alkalies, and have an extraordinary capacity for retaining heat.

Commercial talc is a mixture of talc with other minerals; it is classified into hard and soft, fibrous and flake, and by screen size and color. Fibrous talc owes its structure mainly to tremolite; gritty talcs usually contain dolomite or magnesite; dark-colored talcs are likely to contain admixed serpentine or chlorite; flake and soft talcs only are relatively pure talc.

Uses. The paint industry is the principal outlet for ground talc, soapstone, and pyrophyllite, consuming about one-quarter of total domestic sales; the ceramic industry took 13% in 1937 and ranked as the third consuming industry; paper took 14%, rubber 12%, and roll roofing 10%; consumption for toilet preparations and foundry facings are much less important. Relatively small quantities are consumed as fillers in various articles; as polishes for rice, peanuts, and glass, and in lubricants, concrete, plaster, and insecticides. Soapstone or talc crayons (French chalk) are used chiefly for marking cloth and glass, and LAVA (calcined talc) either massive or compounded with silicate of soda (ALSIMAG) or other binder is used in gas-burner tips and for numerous electrical and refractory specialties. Sawed soapstone slabs are used in laundry tubs, laboratory benches, and various structural purposes, but the largest single use is in refractory blocks for smelting sulphate (KRAFT) pulp.

Occurrence. Commercial deposits of talc and soapstone are found only in much altered, old ultrabasic intrusions, or in certain metamorphosed dolomitic limestones. In Vermont the deposits lie in a serpentine belt that yields asbestos farther north; but near Schuyler, Va., soapstone occurs in large sheetlike bodies that were altered progressively into chlorite and finally talc without being serpentinized. Certain European deposits, including some of those that yield the best grade of toilet talc, occur in lenses and irregular masses interbedded with crystalline schists. Some of the best talc and some of the largest deposits occur in dolomites intruded by igneous rocks. Accessory minerals in commercial talcs, usually left in the final product, include serpentine, dolomite, magnesite, calcite, and tremolite with occasional chromite, magnesite, and traces of nickel and other constituents of basic rocks.

Production. Talc and soapstone are so widely distributed in nature that most industrial countries produce some for their own needs, but the United States usually produces about one-third of the world total and two or three times as much as any other country. Manchuria recently has vied with France for second place, followed by Italy, Norway, Austria, Canada, and India.

Domestic production of pyrophyllite, talc, and ground soapstone rose in 1937 to 229,999 short tons, well above the general level of 210,000 to 220,000 that marked the upper limit of sales during the previous 20 yr. Of this quantity 217,811 tons was ground, 1,101 tons was sawed or manufactured, and 11,087 tons was sold crude, much of it probably to be ground later. In addition a substantial quantity of soapstone slabs and blocks was produced in Virginia and sold as dimension stone.

Selling. The average value per ton of all grades of talc, pyrophyllite, and ground soapstone, f.o.b. mills, dropped from $12.50 to $10.43 per short ton in 1928 and rose to $11.14 in 1937. Prices of imported talc range from $10 to around $80 per ton. Manchurian talc sells in the United States for $30 to $40 per ton, a little off-color material fetching $20. Italy sells various grades, but that shipped to the United States costs around $30 to $40 per ton, f.o.b. mines, and is priced delivered to American wholesale consumers at $45 to $80 per ton. Ground soapstone is generally quoted around $5 per ton for 200-m. and up to $7 per ton for 325-m., f.o.b. Virginia plant. Roofing talc, 20~50 m., sells as low as $4, while the poorer grades ground through 200-m. fetch $8.50 per ton or more in bulk, $1 extra in bags. New York fibrous talc (ASBESTINE) ground through 325-m. for the paint trade normally sells for $12 to $15 per ton, occasionally much higher. High-grade LAVA TALC, lumps, may sell for as much as 6¢ per lb., and the various forms of sawed talc generally sell for at least $100 to $150 per ton.

Treatment. Massive talc that may be taken out in lumps is scabbed with an axe to remove adhering impurities and then sawed like cordwood into smaller pieces so as to facilitate cutting out hard particles and fibrous material. Sometimes it is further shaped by expert machinists into articles which are heated gradually up to 1,800° F., kept at this temperature for 6 hr., and cooled in the furnace for 24 hr., becoming harder than steel. Soapstone is shaped and surfaced like marble, but more easily (*IC 6563*).

About 95% of the total tonnage is milled. Wet-grinding, as a means of avoiding dust-disease hazard, is already employed at Hemp, N. C., for pyrophyllite; but dry-grinding followed by air separation is universal practice, except for cosmetic talc, which is bolted through cloth. In only a few mills is preliminary drying needed. For fine grinding, Raymond, Hardinge, tube, er..ery, attrition, and buhr mills are all used (see Sec. 6). Roofing granules are made by SEABOARD OPERATING CO., Marriotsville, Md., in a hammer mill followed by Sturtevant buhrstone mill and screens, whereas ALBERENE STONE CORP., Schuyler, Va., uses a hammer mill for secondary crushing (from about 1 in. to 1/4 in.) and ball mill for fine grinding; coarser products (main tonnage 40~48-m.) are sized on Hum-mer screens and fines are air-classified to 97% <300-m. Flotation is used by EASTERN MAGNESIA TALC (Fig. 92); it yields much better and purer product (tailing may be sold as low-grade magnesite) but does not improve slip sufficiently to compete with best Italian, Spanish, and Manchurian talcs. Elsewhere no concentrating is done except that which results from selective grinding; by using a throw-out attachment on the grinding mill or an air separator it is possible to leave most of the grit in a coarser product that may be marketed to the roofing trade, the relatively pure fine-ground product being sold for paper making and other uses. Flotation permits close control of the ratio of talc to subsidiary mineral in commercial products. Tests on Gouverneur, N. Y., talc (*18 ACerS 292*) showed that ores containing fibrous talc and those containing tremolite and calcite were much more difficult to separate than those containing foliated talc and quarts. Different flotation agents were required for the various ores; pine oil was suitable for foliated talc, but amine-type reagents were better for fibrous talc. Tremolite-enriched tailing from talc-tremolite ores need not be thrown away, being usable in wall-tile mixtures.

Southern Talc Co., Fig. 91 (*143 # 11 J 45*).

Location: Murray Co., Ga.

Crude: Gray opaque talc, unsuitable for cosmetics.

Products: Principally crayon, and ground for filler and surfacer for asphalt roofing, paper, and shingles.

Legend for Fig. 91:

1. Sledging floor.
2. Williams Jumbo No. 1 hammer mill, 25-hp. motor.
3. Elevator; 50-ton bin.
4. Williams 4-roll crusher, 60-hp. motor on mill, 40-hp. motor on fan; *a* = grinding ring; *b* = built-in air classifier. Electric-eye control of feed operated by a colored-water column actuated by back-pressure in the mill.
5. Williams vibrating screen, aperture as desired.
6. Cyclone collector.

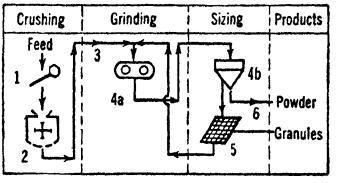

FIG. 91. SOUTHERN TALC CO. (grinding mill).

Summary. Selective mining to separate crayon and grinding stocks. Crayon stock sawed; rejects to grinding stock. Latter is crushed in a hammer mill and ground in a fixed-path dry grinding mill (Sec. 6, Art. 2) with built-in air separator.

Sawing is done on a saw line comprising a line of saw tables about 42 in. high and 42 in. wide with saws projecting upward through top. Material progresses along the table from saw to saw manually. Order of saws is: 24-in. facing saw, producing roughly square blocks; 14-in. blocking saw, producing blocks about 5 in. long (crayon length); 2 @ 14-in. stocking saws, cutting to crayon thickness (1/4 to 3/16 in.); 7 @ 9-in. pencil saws, with individual operators, cutting to crayon widths (1/4 to 1/2 in.). Round pencils are made from 1/4-in. square crayons by pushing these individually through a rounding machine. All saws are push-button controlled. A crew of 10 men on the saw line cuts 450 to 800 gross of crayons per 8 hr. (150 to 200 gross per ton of saw rock).

Eastern Magnesia Talc Co., Fig. 92 (*32 # 4 PQ 28*).

Location: Burlington, Vt.

Capacity: 1.2 t.p.h.

Crude: Air-classifier reject from dry grinding; contains 55% talc, 35% magnesite, and small quantities of Ni and Co minerals.

Products: Nickel concentrate; 95% talc; a low-grade magnesite (90% $MgCO_3$).

Legend for Fig. 92:

1. Air-separator reject from dry grinding; screw feeder; conical storage tank with Syntron feeder.
2. Denver conditioner; reagents and water added. Reagents (*RI 3314*) are pine oil, kerosene emulsified by Emulsol X-1, sodium silicate ±Calgon.
3. 2 shaking tables (Wilfley, Plat-O).
4. 18 to 24% Ni.
5. Middling contains 80% $MgCO_3$, 15% talc, 5% Ni.
6. James table.
7. 18 to 22% Ni, 2% Co.
8. 1 @ 28×33-in. 3-cell Denver Sub-A machine.
9. 1 @ 18×12-ft. thickener; feed 18 to 20% solids, spigot 50% solids; 1 @ 6×6-ft. drum filter, cake 25% moisture; 1 @ 4×25-ft. indirect-heat rotary drier (1 t.p.h.) to 0.1% moisture.
10. 95% talc, 90% <200-m.
11. 1 @ 8-cell 22×27-in. Denver Sub-A machine.
12. About 90% magnesite.
13. Reground in a Raymond 5-roll high-side mill to 99.9 <325-m., or in a Micronizer to <5- or 6-μ.

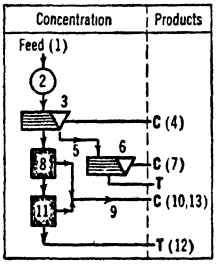

FIG. 92. EASTERN MAGNESIA TALC CO.

Summary. Crushed in 3 stages; dry-ground; air-classified; classifier reject conditioned, tabled, and floated one-stage.

44. TRIPOLI

Properties. The earthy siliceous products of weathering limestone or calcareous chert are often called SOFT SILICAS to distinguish them from finely ground quartz, called HARD SILICA or POTTER'S FLINT. All soft silicas other than diatomite are classed as tripoli by the U. S. Bureau of Mines, and the term TRIPOLI has often been applied erroneously even to diatomite or tripolite, deposits of which have long been known near Tripoli, in northern Africa. On the other hand, efforts have been made to restrict the term tripoli to abrasive earths produced in Missouri and Oklahoma and to call other soft

silicas, notably the Illinois-Tennessee types used mainly as fillers, AMORPHOUS SILICA. Strictly, the latter is chalcedonic quartz with cryptocrystalline structure and its average grain size (about 0.002-mm.) is smaller than that of the Missouri-Oklahoma product (<0.01-mm.). The Missouri-Oklahoma product is darker in color (mostly cream to pink) and, owing to its high porosity, has a lower apparent specific gravity; it bulks about 30 cu. ft. per short ton in place and about 45 cu. ft. when broken and stored in drying sheds. The freshly mined rock carries over 30% moisture; the fines may carry as much as 52%.

Commercial tripoli almost always contains at least 95% and often 98% or more SiO_2. Most varieties, except the hardest Illinois rock, can be cut by the fingernail, and small pieces can be rubbed to powder between the fingers. The Illinois phase is much more coherent and the Arkansas variety does not break down into individual grains though it may be water-ground readily to a soft, smooth talclike material having individual sharp-edged particles smaller even than the Illinois phase. Microscopic examination of the ground Missouri-Oklahoma product reveals very little free quartz and even the finest particles retain a fibrous, porous structure.

Uses. Firmly coherent tripoli has been cut and used successfully as building stone; the production of cut blocks in Missouri for use as filter stones for household water purification was a large business before about 1910, when municipal filtration plants in most large towns and cities rendered such purification unnecessary. In 1937, 44% of all domestic tripoli sales were for abrasive uses, 24% as filler, 6% for concrete admixture, and 26% for filter block, foundry facing, oil-well drilling mud, and some unspecified uses, including glass making, ceramics, furnace insulation, acoustic plasters, etc. The chief filler use is in paint, where the Missouri-Oklahoma product is ruled out by its color. Abrasive uses include scouring soaps and powders, metal polishes, and as mild mechanical cleanser in washing powders for fabrics and in various metal buffing compositions. Most of the tripoli exported is used in buffing compositions, as the Missouri-Oklahoma products have gained a world-wide reputation in this field. The porous, irregular-shaped grains, it is claimed, stick to buffing wheels better than any other abrasive and yet are hard enough to abrade any metal surface without causing deep scratches.

Occurrence. All soft silicas are products of weathering, although it is postulated that the Missouri-Oklahoma deposits may have been transported and laid down as a flocculent colloidal silica in essentially their present form. The Illinois and western Tennessee Valley soft silica is generally well stratified in flat-lying beds. The Tennessee-Georgia-Alabama beds usually have definite side walls (dip 45° or less) and the leading Arkansas deposit is a 20-ft. seam that may grade into unaltered chert farther away from the mountain-flank outcrop. The Missouri-Oklahoma tripoli is found within a few feet of the surface in horizontal beds averaging 10 ft. thick, although some folding and fracturing has occurred.

Production. The average production of tripoli in the United States from 1925 to 1929 was 31,782 short tons a year valued as sold (mostly ground) at $501,394. In 1937 the output was 34,936 tons realizing $450,570. Ordinarily Illinois supplies at least one-third and the Missouri-Oklahoma district more than one-half of the domestic total. Arkansas also is becoming an important source. Other producing states are California, Georgia, and Tennessee. Included in these figures, too, is a small output of finely ground Pennsylvania ROTTENSTONE, which is a more or less decomposed argillaceous limestone or black shale and not tripoli. Tripoli has been produced in France, Spain, Germany, and perhaps other countries, but no material resembling the Missouri-Oklahoma products is produced elsewhere (except perhaps in Germany) and several thousand tons a year of these products are exported.

Selling. The Missouri-Oklahoma tripoli is roughly graded into 5 sizes: (1) AIR-FLOAT, all <200- and 98% <325-m.; (2) PARTING, 98 to 99% <200-m.; (3) ADMIX, 90% <200-m. and 30% <10-μ; (4) BUFFING, all <40- and 80 to 85% <200-m.; and (5) EXTRA FINE ADMIX, 70% <10-μ. Most products are packed in paper or paper-lined jute bags and are sold direct to consumers and to dealers. No standard specifications or tests exist, although both buffing powder and fillers can be matched against samples from previous shipments, for color in water or paint vehicles, for grit by rubbing out with light oil on polished glass, and for oil adsorption and bulking qualities like paint pigments. Owing to the lack of standardization, established buying habits offer serious resistance to the marketing of products from a new source.

Crude silica sells for as little as $2 or $3 per ton, f.o.b. mines, and ground tripoli is priced all the way from $8 to $40 per ton, f.o.b. mill. Average annual sales realizations for crude and refined products have ranged recently between $13 and $17 per ton.

Treatment. Crude material as it comes from the mine generally has to be sorted or graded for color and texture and then air-dried, the Missouri-Oklahoma product being ricked in sheds for 6 mo. before going to the mill, where it is reduced by hammer mill or coal breaker and rolls to pass about 1/4-in. before going through a rotary drier. Hardinge or tube mills pulverize the dried material in closed circuit with Hum-mer or mechanical vibrating screens. All mill operations are housed so exhaust fans can remove dust to baghouses. Cyclone collectors remove intermediate products. Illinois silica is mostly treated wet, although dry grinding with air classifiers makes seven products, which grade from 65 to 99.9% <325-m.

45. VERMICULITE

Properties. The name VERMICULITE includes a considerable group of minerals that give off water and expand greatly—in commercial grades as much as 16 times in one direction—when heated. They generally have the appearance of a bronze mica, but the leaves are soft and inelastic. When expanded the color ranges from silver to golden or darker color, depending partly on the rate of heating and on the amount of oxygen present. The best qualities bulk 6 lb. or less per cu. ft. after being exfoliated, forming corklike pellets that resist abrasion. Varieties that explode or fly apart into small flakes are of little value unless or until more demand develops for sizes smaller than about 14-m.

Uses. The main use of expanded vermiculite is for insulating houses. Smaller quantities are mixed with suitable binders and made into wall board and heat- and sound-insulating blocks and cements. Miscellaneous uses include sponge rubber (mixed with latex), decorative finishes, acoustic plasters, lubricants, wall paper printing, and paint extender. Ultrafine powder (98% <325-m.) is used in aluminum paints as extender and in automobile motors and transmission to cool and lubricate. A water-floated product replaces graphite in oilless bearings. A mixture of raw and expanded vermiculite has been patented for use as motor dope to seal the rings of worn automobile engines.

Production. Vermiculite is typically an American product, mined originally and principally in Montana and to a minor extent in North Carolina, Wyoming, and Colorado. Domestic output rose to 26,556 short tons valued at $260,664 in 1937, some of which was exported to Canada and Europe. Russian material has been exploited but is not well-liked in this country. South African deposits are said to be promising.

Selling. Raw vermiculite is shipped from western mines to expanding plants in various consuming centers, most of which are either owned by or licensed under patents owned by the leading mining company. Clean unexpanded vermiculite, suitably sized for making house fill, is priced (1937–40) at $12 per short ton, f.o.b. Libby, Mont., plus freight, which ranges from a minimum of $6.60 to Minneapolis, Minn., to $16.50 to Boston, Mass., in carload lots (usually 43 tons). Expanding and bagging costs about $6, making a total cost around $30 per ton, including shrinkage. The product is marketed in bags containing 4 cu. ft. (under 24 lb.) which retail at 90¢ to $1.35 each and are sold to building-supply dealers and contractors at 70 to 82¢ each (equivalent to $56 to $68 per ton). North Carolina raw material fetches only $6 or $7 per ton f.o.b. mines, owing to large loss in fines during expansion.

Approximately 60% of consumption is for house fill which calls for material sized 3~14-m. Fastest growing use is in concrete, chiefly as 1 : 8 mix with Portland cement; this may be poured in place or pre-cast into light-weight, fireproof slabs that can be worked like lumber. ACOUSTICAL PLASTERS (3 parts gypsum to 1 part vermiculite), another growing outlet, uses either 10~20-m. or 16~24- or 30-m. material.

Several small operators, after failing to make expenses by shipping raw vermiculite to distant points, have built expanding plants, sell house fill locally, and make plaster and concrete products from fines that otherwise might be wasted.

Treatment. Raw vermiculite is prepared in cleaning plants at or near the mines by crushing, hand-picking, screening, and drying. At Libby, Mont., the yield of salable material has so increased that little more than 2 tons is mined per ton of sized raw product shipped. At this plant all >$^3/_4$-in. material is rejected and >$^1/_2$-in. (JIGGER SCREEN) is reduced in a hammer mill before joining undersize on the way to a baffled, conical-shaped, oil-fired flash drier (300° F.). The dried material is roughly sized on Hum-mer screens, and cleaned in 32 specially built air separators which yield concentrate, middling, and waste. Concentrate goes to a 5×16-ft., oil-fired rotary drier, thence to a triple-deck jigger screen, yielding four sizes designated as 1A, 1, 2, and 3 (respectively, $^1/_2$-in.~3-m., 3~14-, 10~20-, and 16~24-m.). Middling, mainly small thick books of vermiculite, is returned to hammer mills. Elsewhere as much as 80% of the mine product may be rejected in addition to a large wastage of fines in selective mining. Fines can be froth-floated, like mica, and coarser material can be agglomerate-tabled with high efficiency; the reagents, however, should be chosen so as not to discolor the product after furnacing.

For exfoliating, some plants calcine in patented rotary furnaces, usually oil-fired; oil-fired shaft furnaces are also employed. In a typical expanding unit (*19 ACerS 94*) raw vermiculite is fed into a preheating chamber comprising a double-walled vertical cylinder. Air for gas burners is preheated by passing through the annular space between the walls, and the combustion products pass up through the inner cylinder which contains conical baffles to impede the falling vermiculite. Six burners using preheated air and city gas are placed in the primary expanding chamber (in effect, a continuation of the preheating chamber) where a temperature of 2,000° F. is maintained. The expanded material is removed from this chamber by a flight conveyor. Much of the dust is removed by an exhaust fan connected with the tops of the expanding furnace and the plant elevators. Rock and unexpanded vermiculite are removed against an air current through a slot in the bottom of the chute leading from the product elevator to the bagging line. Dust loss is 2% and rock loss 7%.

SECTION 3A

CEMENT

BY

C. H. BREERWOOD

VICE PRESIDENT AND GENERAL MANAGER, VALLEY FORGE CEMENT CO.

ART.		PAGE
1.	Introduction	01
2.	Preparation of raw material	07
3.	Chemistry of the kiln	15
4.	Burning	18
5.	Grinding clinker	25
6.	Cement handling	26
7.	Flowsheets	29

1. INTRODUCTION

Definitions. CEMENT is a mixture of artificial mineral-like oxide-type compounds, similar in composition and probably in structure to the natural silicates. It is made by burning together limestone and a natural carrier of SiO_2 and Al_2O_3 such as clay or shale. Fe_2O_3, added as hematite or mill scale, is normally also present. The principal cement compounds are tricalcium silicate ($3CaO \cdot SiO_2$), dicalcium silicate ($2CaO \cdot SiO_2$), tricalcium aluminate ($3CaO \cdot Al_2O_3$) and tetracalcium aluminoferrite ($4CaO \cdot Al_2O_3 \cdot Fe_2O_3$). The symbols for these four compounds are universally abbreviated in the literature of cement as C_3S, C_2S, C_3A, and C_4AF respectively. Most cements contain also small proportions of gypsum, added during the grinding; further small quantities of MgO, Na_2O and K_2O, which are almost invariably present in the raw materials; and minute amounts of one or more of the oxides TiO_2, P_2O_5, and Mn_2O_3, also introduced with the raw feed.

Table 1. Analyses and tests of 100 commercial Portland cements (*40 Pro. ASTM 988*)

Item	Range	Average
SiO_2	23.6 to 19.0	21.1
Al_2O_3	7.1 to 2.8	5.1
Fe_2O_3	6.0 to 1.8	3.0
CaO	66.3 to 61.2	63.6
MgO	5.4 to 0.7	2.4
SO_3	2.6 to 1.4	1.8
Ignition loss	4.1 to 0.6	1.5
Insoluble residue	0.45 to 0.03	0.16
TiO_2	0.64 to 0.03	0.24
P_2O_5	0.63 to 0.00	0.14
Mn_2O_3	0.69 to 0.01	0.11
Na_2O	1.20 to 0.00	0.27
K_2O	1.41 to 0.20	0.46
Free CaO	3.00 to 0.10	1.00
C_3S	62.5 to 26.8	51.0
C_2S	42.9 to 7.6	22.2
C_3A	14.1 to 0.7	8.5
C_4AF	18.2 to 5.5	9.1
<200-m	99.9 to 84.3	93.0
<325-m	97.5 to 70.0	85.7
Surface area, sq. cm. per gm. *a*	2,250 to 1,160	1,660
Tensile tests, lb. per sq. in.:		
3-day	375 to 130	289
7-day	490 to 245	360
28-day	505 to 290	409
Compression tests, lb. per sq. in.:		
7-day	5,960 to 2,810	4,667
28-day	8,730 to 3,990	5,900
1-year	9,600 to 5,600	7,512
5-year	10,030 to 5,530	8,310

a By turbidimeter.

The four principal cement compounds are all anhydrous, but have the property, essential to their use as cement, of reacting with water to form hydrates which are relatively insoluble in water and which have cementitious properties not unlike those of glue and gelatin, including the property of increase in strength as the amount of free water is decreased by progressive hydration. For discussion of the chemical reactions and physical mechanisms of setting and hardening of cements see *The chemistry of*

cement and concrete, by F. M. Lea and C. H. Desch; Longmans, Green & Co., New York (1935), and the bibliography therein cited.

Uses. Cement is primarily a structural material, used to bond together sand and/or rock aggregate and/or metals, such as steel, for such massive structures as dams, heavy retaining walls, large foundations, and the like; for slabs, as in pavements, floors, and walls; for structural members, *e.g.*, beams and columns; and for facings and protective coatings as in plasters, Gunites, etc.

Kinds of cement. The great bulk of all cements now manufactured and used is Portland cement, so named from a color resemblance of the set cement to a well-known English building stone. The usual raw materials are limestone and clay or shale, plus, usually, a small amount of ferric oxide. Characteristic properties of commercial Portland cements (ASTM, type I, see *post*) are given in Table 1. Other cements of special nature and properties are the POZZOLANAS and pozzolanic cements, blast-furnace cements, aluminous cements, masonry cements, waterproof cements, and colored cements.

Pozzolanas are highly siliceous, slightly consolidated, fine-grained rocks such as volcanic tuffs and diatomaceous earth which have the property of reacting with lime in aqueous solution to form the insoluble hydrated calcium silicates characteristic of set cements. Pozzolanic cements are mixtures of Portland cement and pozzolana, the latter being added to combine with free lime, either left in burning the Portland cement or formed by hydrolysis of C_3S during the setting reaction. Soundness is thus aided.

Slag cements. Slag obtained as a by-product from iron blast furnaces contains the same oxides that are present in Portland cement. Granulated, ground, and mixed with hydrated lime it forms COLD-PROCESS SLAG CEMENT. Granulated and ground with Portland-cement clinker it forms PORTLAND BLAST-FURNACE CEMENT. Blast-furnace slag, replacing clay and shale, is used together with suitable proportions of limestone in making ordinary Portland cement.

Aluminous cements are those in which alumina and iron largely replace silica as the acid oxide. The raw materials are limestone and ferruginous bauxite. Burning comprises fusion in blast or reverberatory furnaces. Characteristic properties are extremely rapid hardening, very high early strength, high resistance to sulphate and to mild acid waters.

Masonry cements, waterproof cements, and colored cements. MASONRY CEMENTS are mostly mixtures of Portland cement with added substances, *e.g.*, finely divided siliceous material, raw ground limestone, clay, clay and limestone, ground slag, hydrated lime, and Rosendale or natural cement. WATERPROOF CEMENTS are usually Portland cement with stearates added. COLORED CEMENTS are ordinarily white Portland cement, or gray Portland cement, with colored pigments added. Their composition and compounding are specialties.

Specifications. Cement is defined as an article of commerce by means of both chemical and physical properties and limits. The common property sought in all cements is the

Table 2. Chemical requirements for cements (*After ASTM C-150-41*)

	Type I	Type II	Type III	Type IV *a*	Type V *a*
Silicon dioxide (SiO_2), min., %	.....	21.0	.....	.....	24.0
Aluminum oxide (Al_2O_3), max., %	.....	6.0	.....	.....	4.0
Ferric oxide (Fe_2O_3), max., %	.....	6.0	.....	6.5	4.0
Magnesium oxide (MgO), max., %	5.0	5.0	5.0	5.0	4.0
Sulphur trioxide (SO_3), max., %	2.0	2.0	2.5	2.0	2.0
Loss on ignition, max., %	3.0	3.0	3.0	2.3	3.0
Insoluble residue, max., %	0.75	0.75	0.75	0.75	0.75
Ratio of Al_2O_3 to Fe_2O_3	.....	0.7 to 2.0	.....	.....	0.7 to 2.0
Tricalcium silicate ($3CaO \cdot SiO_2$), *b* max., %	.....	50	.....	35	.....
Dicalcium silicate ($2CaO \cdot SiO_2$), *b* min., %	.....	.....	.....	40	.....
Tricalcium aluminate ($3CaO \cdot Al_2O_3$), *b* max., %	.....	8	15	7	5

a See note, Sec. 1 of the full specification.

b Expressing chemical limitations by means of calculated assumed compounds does not necessarily mean that the oxides are actually or entirely present as such compounds. The percentages of tricalcium silicate, dicalcium silicate, and tricalcium aluminate shall be calculated from the chemical analysis as follows:

Tricalcium silicate =

$$(4.07 \times \%\ CaO) - (7.60 \times \%\ SiO_2) - (6.72 \times \%\ Al_2O_3) - (1.43 \times \%\ Fe_2O_3) - (2.85 \times \%\ SO_3).$$

Dicalcium silicate =

$$(2.87 \times \%\ SiO_2) - (0.754 \times \%\ 3CaO \cdot SiO_2).$$

Tricalcium aluminate =

$$(2.65 \times \%\ Al_2O_3) - (1.69 \times \%\ Fe_2O_3).$$

Oxide determinations calculated to the nearest 0.1% shall be used in the calculations. Compound percentages shall be calculated to the nearest 0.1% and reported to the nearest 1%.

capacity to cement together the chemically inert but structurally strong fillers, sand, rock, and steel. This property is measured by the tensile and compressive strengths of test blocks of neat cement and/or of cement-sand plasters, made under closely specified standard conditions of proportioning, mixing, casting, storage, and subjection to the test forces. Other special properties required by the user for particular services are high or low speed of setting, early development of strength, low heat evolution during setting, and exceptional resistance to attack and disintegration by fluids, particularly natural waters containing relatively high concentrations of dissolved acids and salts. These properties are in part determined by direct physical tests and in part by established correlations with other physical properties, *e.g.*, fineness; with chemical analyses, and with compound compositions (Art. 3).

Standard American specifications for Portland cement have been issued by the American Society for Testing Materials (*ASTM C-150-41*). They contemplate and describe five types, as follows:

Type I: For use in general concrete construction when the special properties of the other types are not required.

Type II: For general concrete construction exposed to moderate sulphate action, or where moderate heat of hydration is required.

Type III: For high early strength.

Type IV: For low heat of hydration.

Type V: For high sulphate resistance. Designed principally for salt-water work.

Chemical limits for the different types are given in Table 2 and physical requirements in Table 3.

Table 3. Physical requirements for cements (*After ASTM C-150-41*)

	Type I	Type II	Type III	Type IV *a*	Type V *a*
Fineness, specific surface, sq. cm. per gm.					
Average value, minimum	1,600	1,700	.....	1,800	1,800
Minimum value, any one sample	1,500	1,600	.....	1,700	1,700
Soundness:					
Autoclave expansion, max., %	0.50	0.50	0.50	0.50	0.50
Time of setting (alternate methods): *b*					
Gillmore test:					
Initial set, min., not less than	60	60	60	60	60
Final set, hr., not more than	10	10	10	10	10
Vicat test:					
Initial set, min., not less than	45	45	45	45	45
Final set, hr., not more than	10	10	10	10	10
Tensile strength, lb. per sq. in.: *c*					
The average tensile strength of not less than three standard mortar briquets, prepared in accordance with Methods C 77, shall be equal to or higher than the values specified for the ages indicated below:					
1 day in moist air	.....	.....	275	.....	.....
1 day in moist air, 2 days in water	150	125	375	.....	.....
1 day in moist air, 6 days in water	275	250	.....	175	175
1 day in moist air, 27 days in water	350	325	*c*	300	300
Compressive strength, lb. per sq. in.: *c*					
The average compressive strength of not less than three mortar cubes, prepared in accordance with Method C 109, shall be equal to or higher than the values specified for the ages indicated below:					
1 day in moist air	.....	.....	1,300	.....	.....
1 day in moist air, 2 days in water	1,000	750	3,000	.....	.....
1 day in moist air, 6 days in water	2,000	1,500	.....	800	1,000
1 day in moist air, 27 days in water	3,000	3,000	*c*	2,000	2,200

a See Note, Sec. 1 of the full specification.

b The purchaser should specify the type of setting-time test required. In case he does not so specify, the requirement of the Gillmore test only shall govern.

c The purchaser should specify the type of strength test required. In case he does not so specify, the requirements of the tensile strength test only shall govern. The strength at any age shall be higher than the strength at the next preceding age. Tests at 28 days on Types I and II cement may be waived at the option of the purchaser. If, at the option of the purchaser, a 28-day test is required on Type III cement, the strength at 28 days shall be higher than at 3 days.

Chemical specifications for Type I simply limit the objectionable ingredients, but the physical requirements serve to impose reasonable limits on the principal ingredients as well.

Most commercial Portland cement is furnished under this specification. Comparison with Table 1 shows that the specified chemical maxima are rarely exceeded, whereas the averages of the strength tests are well in excess.

Special properties are obtained by enhancement or suppression of one or another of the cement compounds in the clinker. Thus for HIGH EARLY STRENGTH the C_3S/C_2S ratio is increased, owing to the capacity of C_3S to hydrate and set rapidly and to develop thereupon almost full ultimate strength. C_2S, on the other hand, is very slow to set, but it develops even greater strength than C_3S at about 2 years. The contributions of the aluminous compounds to both early and ultimate strengths are substantially negligible.

Heats of hydration of the clinker compounds, as given by Bogue and Lerch (*Paper 26, Portland Cement Assoc. Fellowship, USBS*), are: C_3A, 207 cal. per gm.; C_3S, 120; C_4AF, 100; C_2S, 62. Hence in specifying and making cements for use in massive concrete structures, where temperature of upward of 50° C. above final temperature may develop owing to hydration, and shrinkage cracks and consequent weakness result on cooling, the silica modulus (p. 09) is made high and the lime modulus low, which increases production of C_2S instead of C_3S.

Resistance to sulphate waters increases with decrease in C_3A content (*40 ASTM 988*).

Shrinkage after setting is most pronounced with high C_3A; C_3S appears to shrink least; C_2S is intermediate (*38 #2 ASTM 419*).

Fineness of cement has great effect both on early strength and heat evolution during setting, owing to the fact that it accelerates the hydration reaction. It is, therefore, desirable in cements for rapid hardening and high early strength; undesirable for the low-heat varieties.

Special specifications are frequently drawn by large buyers in the attempt either to obtain a cement particularly suited to their use, or for commercial reasons. U. S. GOVERNMENT SPECIFICATIONS, which preceded the A.S.T.M. specifications, covered the same general types of cement, and were largely adopted by A.S.T.M. in setting up the standard American specifications given in Tables 2 and 3. NEW YORK CITY BOARD OF WATER SUPPLY SPECIFICATIONS enforce rigid limits as to chemical ingredients, cement compounds, free and total alkalies, and the degree of burn; they are designed principally to insure sound cement with long life and high resistance to aggressive waters. MISCELLANEOUS SPECIFICATIONS cover standard weights of ground cement; methods for testing; methods for sampling and storing; limits on objectionable ingredients; limits on adulterants; tolerances for chemical requirements; and tolerances for physical requirements.

Production of cement in U. S., by states, is given in Table 4. World production is reported in Table 5.

Table 4. Cement production in the United States (thousands of barrels)

State	1913	1920	1925	1928	1933	1937	1941	Number of plants now operating
Alabama	*a*	*a*	6,288	6,749	1,969	4,415	7,410	6
California	6,159	7,098	13,098	13,556	7,165	11,954	19,935	12
Illinois	5,084	5,534	7,101	7,335	3,974	5,246	5,854	4
Indiana	10,873	10,788	*a*	*a*	*a*	*a*	*a*	5
Iowa	3,624	4,849	4,648	7,070	3,044	4,706	5,065	5
Kansas	3,375	4,341	6,511	6,574	2,201	3,697	4,681	6
Michigan	4,186	4,891	10,936	13,849	3,633	8,181	9,485	11
Missouri	4,803	6,018	8,332	7,881	3,799	4,756	6,328	6
New Jersey	4,460	*a*	*a*	*a*	*a*	*a*	*a*	0
New York	5,208	5,885	8,770	*a*	4,205	5,913	11,445	11
Ohio	1,668	1,780	5,715	9,233	2,781	5,700	8,156	9
Pennsylvania	28,702	28,269	42,347	41,522	12,294	23,064	32,199	25
Tennessee	*a*	*a*	*a*	4,690	1,348	3,081	5,588	6
Texas	2,117	2,562	4,858	6,346	2,970	6,906	9,680	10
Utah	867	1,094	*a*	*a*	*a*	*a*	*a*	2
Washington	2,339 *b*	2,219	2,482	*a*	*a*	*a*	*a*	6
Other states *c*	8,632 *d*	14,690 *e*	40,573 *f*	51,494 *g*	14,091 *g*	28,555 *g*	38,205	33 *h*
Total	92,097	100,023	161,659	176,299	63,473	116,175	164,031	157

a Included in "Other states."

b Includes Oregon and Washington.

c Alabama, Colorado, Georgia, Kentucky, Maryland, Montana, Oklahoma, Tennessee, Virginia, West Virginia, Arizona.

d Includes all states in *c* except Arizona, and additionally Minnesota, Nebraska, and New Jersey.

e Includes all states in *d* except Alabama, and additionally Indiana, Oregon, South Dakota, Utah, and Wisconsin.

f Includes all states in *e* except Tennessee and additionally Florida, Louisiana, Maine, New York, and Washington.

g Includes all states in *f* except New York and additionally Arkansas, Idaho, and Wyoming.

h Arkansas, 1; Colorado, 2; Florida, 1; Georgia, 2; Idaho, 2; Kentucky, 1; Louisiana, 1; Maine, 1; Maryland, 2; Minnesota, 1; Montana, 1; Nebraska, 2; Nevada, 1; Oklahoma, 3; Oregon, 4; South Dakota, 1; Virginia, 2; West Virginia, 3; Wisconsin, 1; Wyoming, 1.

Table 5. World cement production, thousands of metric tons (*Compiled from national official statistics*)

Country	1928	1933	1936	1937	1938
NORTH AMERICA					
United States	30,445	10,905	19,523	20,138	18,279
Canada	1,759	383	784	975	876
CENTRAL AMERICA					
Cuba	.....	.....	*b*	*b*	*b*
Guatemala	.....	.....	*b*	*b*	*b*
Mexico	216	.....	286	345	374
SOUTH AMERICA					
Argentina	233	514	834	1,035	1,161
Bolivia	.....	.....	11	11	19
Brazil	88	222	485	571	618
Chile	111	139	248	313	364
Colombia	.....	.....	104	123	142
Ecuador	.....	.....	*b*	*b*	*b*
Peru	48	27	75	83	101
Uruguay	.....	136 *c, b*	111	148	158
Venezuela	.....	.....	38	45	40
EUROPE (Excluding U.S.S.R.)					
Austria	523	280	369	430	650
Albania	.....	.....	8	14	*b*
Belgium	3,046 *f*	1,950 *f*	2,350	3,008	3,054
Bulgaria	108	121	113	135	180
Czechoslovakia	.....	850 *a*	1,050	1,360	*b*
Denmark	779	554	792	676	640
Estonia	64	30	51	66	80
Finland	280	163	333	410	475
France	4,240	4,653	4,638	4,255	*b*
Germany	7,576 *g*	3,820	11,689	12,605	15,600
Greece	145	200	277	290	308
Hungary	426	181	215	392	395
Italy	3,077	3,554	3,827	4,359	4,607
Latvia	25	52	100	118	155
Netherlands	.....	360	401	441	456
Norway	318	222	301	320	332
Poland	1,098	411	1,048	1,289	1,719
Portugal	76	164	245	254	268
Rumania	332	220	376	456	448
Saar	137	111	.....	.....	.....
Spain	1,542	1,407	600	650	570
Sweden	468	403	795	876	993
Switzerland	630	.....	509	*b*	650
United Kingdom	4,400	4,470	6,700	7,300	7,900
Yugoslavia	808	650	643	619	712
Turkey	59	118	137	215	268
U.S.S.R.	1,903	2,710	5,845	5,459	5,696
ASIA (Excluding U.S.S.R.)					
China	93 *d*	270 *d*	450	*b*	*b*
Manchuria	.....	.....	580	800 *a*	*b*
Chosen	.....	.....	567	665	*b*
French Indo-China	159	113	149	235	266
India	568	623	977	1,142	*b*
Hong Kong	.....	.....	*b*	*b*	110
Japan	3,841 *e*	4,784 *e*	6,232	6,703	5,519
Iran	.....	.....	*b*	*b*	*b*
Levant	.....	.....	120	180	162
Netherland India	74	.....	136	*b*	*b*
Palestine	.....	135	154	161	98
Philippine Islands	65	95	133	150	167
Syria and Lebanon	.....	58	58	74	80
Thailand (Siam)	.....	44	62	77	82
AFRICA					
Algeria	52	77	67	65	*b*
Belgian Congo	41	11	8	11	16
Egypt	90 *a*	288	335	330	376
Madagascar	.....	5	.....	.....	.....

Table 5. World cement production, thousands of metric tons (*Compiled from national official statistics*)—*Continued*

	1928	1933	1936	1937	1938
AFRICA—*Continued*					
Morocco (French)	60	201	162	156	165
Mozambique	14	21	12	15	24
Tunisia	.....	39	49	56	69
Union of S. Africa	.....	310	760	840	878
OCEANIA					
Australia	766	326	656	732	863
New Zealand	.....	.....	154	176	220
Other	.....	174	.....	.....	.....
TOTAL PRODUCTION					
From above	70,783	47,554	77,730	82,352	72,258
Reported *h*	.....	48,200	78,004	83,759	85,959

a Estimated.
b Data not available, estimate included in total.
c Not included in the totals.
d Total shipments from "custom ports" (excluding Manchuria).
e Including Chosen, Formosa, Kwantung.
f Artificial cement.
g Works affiliated to the German Cement Association. (The number of works not affiliated has increased since 1929.)
h Total includes estimate for other countries not mentioned.

Selling. Average selling price per barrel in bulk, f.o.b. factory, for U. S. production is given in Table 6. Cement is a bulk product, raw material for which is available in all parts of the world; hence important outlets cannot be maintained for any time against an adverse freight differential. The 157 plants in the U. S. are well scattered over 36 states; any marked stable increase in demand from one or all of the other 12 states can be expected to be answered by a new plant therein.

Table 6. Average factory price per barrel for bulk cement in the United States

State	1913	1920	1925	1928	1933	1937	1941
Alabama	*a*	*a*	$1.62	$1.23	$1.27	$1.40	$1.46
California	$1.48	$2.19	2.00	1.89	1.47	1.51	1.39
Illinois	1.01	1.94	1.70	1.57	1.10	1.43	1.45
Indiana	1.00	1.83	*a*	*a*	*a*	*a*	*a*
Iowa	1.15	1.98	1.79	1.56	1.32	1.53	1.63
Kansas	1.00	2.08	1.67	1.49	1.32	1.57	1.51
Michigan	1.04	2.46	1.74	1.37	1.20	1.26	1.36
Missouri	1.02	1.96	1.73	1.56	1.18	1.54	1.58
New Jersey	0.86	*a*	*a*	*a*	*a*	*a*	*a*
New York	0.94	2.02	1.75	*a*	1.33	1.45	1.40
Ohio	1.06	2.13	1.77	1.59	1.20	1.41	1.33
Pennsylvania	0.86	1.90	1.74	1.52	1.26	1.39	1.38
Tennessee	*a*	*a*	*a*	1.36	1.39	1.55	1.52
Texas	1.26	2.25	1.84	1.76	1.70	1.72	1.66
Utah	1.30	2.26	*a*	*a*	*a*	*a*	*a*
Washington	1.41	2.26 *b*	2.21	*a*	*a*	*a*	*a*
Other states *c*	0.97	2.08 *d*	1.76 *e*	1.63 *f*	1.42 *g*	1.57 *g*	1.58 *g*
Average	$1.00	$2.02	$1.77	$1.57	$1.33	$1.48	$1.47

Footnotes have same meaning as in Table 4.

Raw materials for all cements are lime-, alumina-, and silica-bearing materials. The lime-bearing material in 90% of all cement manufacture is limestone; others are blast-furnace slags, marl, and $CaCO_3$ sludge from alkali plants. The usual aluminous materials are clay, shale, and mica. Silica is introduced in the clay and shale and further additions, if necessary, are made in the form of quartz. Iron oxide, in the form of hematite, magnetite, limonite, or mill scale, is a minor component of some cements. Gypsum may be added to the clinker during grinding (Art. 5) to control setting qualities. Rarely calcareous shales or deposits of interbedded limestone and shale are of suitable composition for standard raw-material mixes as mined. In most cases more or less adjustment of chemical composition is necessary prior to burning for each and all of the cements made by any given plant (see Arts. 2 and 7).

Materials used to manufacture cement in U. S. plants and the numbers of plants using each material are: limestone and clay, 72; limestone and shale, 33; limestone, shale, and clay, 5; limestone, shale, and sandstone, 2; limestone, marl, and clay, 3; marl and clay, 5; argillaceous limestone and high-grade limestone, 12; blast-furnace slag and limestone, 8; argillaceous limestone, 9; shells and clay, 4; chalk and clay, 1; argillaceous limestone, shale, and clay, 1; waste lime from alkali plants with clay, 2.

MANUFACTURE

Successive steps in the manufacture of cement are: mining the raw materials, preparation of raw materials, heat treatment, grinding clinker, and handling the finished product.

Mining. The cement rocks—limestone and clay or shale—are relatively soft and shallow-lying. Mining is done in the great majority of cases by quarrying. Normally this involves removal of an overburden of soil and organic material, and some underlying dirty clay or disintegrated shale. The rock itself is then drilled and blasted. For discussion of standard methods see *Peele*. Cost of stripping, mining, and delivery to the primary crusher in well-organized quarries does not, in general, exceed 20¢ per short ton of raw rock (1942); costs much lower than this have been attained with favorable quarrying conditions.

2. PREPARATION OF RAW MATERIAL

Preparation consists in comminution and in adjustment of chemical composition. The sequence of operating steps depends upon whether the process is wet or dry. Wet-process plants, *i.e.*, those in which raw-material grinding and the adjustment of composition are done wet, and the thick wet pulp (slurry) is fed to the kiln, comprised 93 out of 157 plants operating in the United States in 1942; the wet process is used for 94% of the new capacity provided here since 1927. In DRY-PROCESS PLANTS the crushed rock is dried, the components are mixed, ground, stored, blended to adjust composition, and sent dry to the kiln.

Table 7. Costs of primary crushing (per long ton)

Item	Costs, $ per ton	
	100- to 150-ton plants	300-ton plants
Operating labor	0.0274	0.0092
Operating supplies	0.0024	0.0016
Maintenance labor	0.0055	0.0031
Maintenance material	0.0058	0.0048
Power	0.0060	0.0057
Total	0.0471	0.0244

Crushing

Crushing reduces run-of-quarry materials to a size (usually $<^3/_4$-in.) suitable for feed to the pulverizers. The reduction may be two- or three-stage. Jaw or gyratory crushers (Sec. 4, Arts. 2 and 3) are the usual primary machines, but single-roll crushers (Sec. 4, Art. 5) are often used where character of rock permits. Hammer mills (Sec. 4, Art. 9), cone crushers (Sec. 4, Art. 7), and rolls (Sec. 4, Art. 8) are used as secondary crushers.

Costs. The controlling factors in crushing costs are the size and character of the quarry rock, its moisture content and the tendency of moisture to produce stickiness, the design of the plant, and the efficiency of operation.

Table 8. Costs of secondary crushing (per long ton)

Item	Costs, $ per ton	
	100- to 150-ton plants	300-ton plants
Operating labor	0.0136	0.0042
Operating supplies	0.0015	0.0006
Maintenance labor	0.0064	0.0040
Maintenance material	0.0079	0.0067
Power	0.0176	0.0103
Total	0.0470	0.0258

Cost of primary crushing (1942) for stone of average hardness from power-shovel size to about 6-in., ranged from about 4.5¢ per long ton at plants of average size (100 to 150 t.p.h.) to about 2.5¢ at larger plants (300 t.p.h.). These costs include conveying to the raw-grinding department; they do not include plant overhead, interest, depreciation, taxes, etc. Typical breakdowns are shown in Table 7.

Costs of secondary crushing (6- or 8-in. to $<^3/_4$-in.) range from 4.7¢ per long ton for average-size plants to 2.6¢ per ton for larger plants. Typical breakdowns are given in Table 8.

Drying

Drying before grinding is necessary in dry-process plants to insure effective operation of the grinding mills. Direct-heat rotary driers (Sec. 17, Art. 3) fired with pulverized coal or by grate stokers are usual, but waste heat from the kilns is sometimes used. Customary

practice is to dry between the secondary crushers and storage, but in several recent plants drying is done in the grinding system by circulating hot gases (700° F.) from special oil-fired furnaces through the system and thence through bag-type dust collectors, using a suction fan beyond the dust collectors to remove the moisture-laden gases at about 150° F.

Table 9. Costs of drying (per short ton)

Item	Limestone and shale	Argillaceous limestone
Operating labor	$0.046	$0.018
Operating supplies	0.002	0.0003
Maintenance labor	0.010	0.005
Maintenance material	0.013	0.003
Coal (5 lb. at 1/4¢)	0.040	0.005
Power	0.011	0.024
Total	$0.122	$0.055

Costs. In drying argillaceous limestone, when moisture does not average much above 3%, costs of 6¢ per short ton can be attained with modern pulverized-coal-fired driers. In several hot-air grinding installations limestone is dried for less than this. Where limestone and hard shale are the raw materials, and the shale carries much moisture, costs run as high as 12¢ per ton. Cost breakdowns are given in Table 9.

Crushed-rock storage

Storage for crushed basic raw materials (limestone, shale, clay, silica, iron, diaspore, coal, and gypsum) and for clinker and the handling of the materials therethrough are important parts of cement-making procedure. Standard practice, almost universally adopted, is to use a compartmented bin, ordinarily several hundred feet long, 60 to 100 ft. wide, covered, with overhead cranes and grab buckets under the cover for stocking and recovering the materials of large bulk. Fig. 1 illustrates the recent installation at the

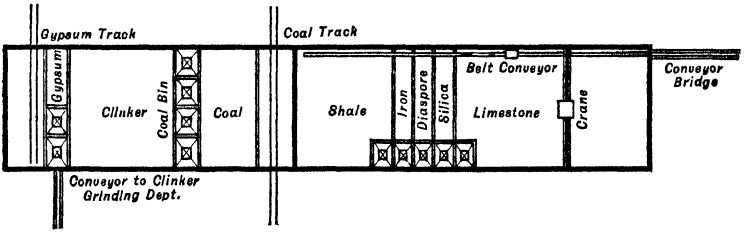

FIG. 1. Material storage at Hawkeye plant, MARQUETTE CEMENT MFG. CO.

Hawkeye plant of MARQUETTE CEMENT MFG. CO. It is 467 ft. long, 80 ft. wide, under a roof 60 ft. high, served by a 75-ft. crane with 3-cyd. grab bucket. The raw and in-process materials are delivered by belt conveyor and by cars above the wall level and are dumped in a pile into their respective receiving or bulk-storage compartments. They are then distributed as necessary by the crane, either to other parts of bulk storage or into the conveyor-feed bins. These conveyor-bins are usually provided with constant-rate feeders to permit proper proportioning onto the conveyors to the grinding mills. Coal is similarly handled.

Table 10. Cost of storage and handling at wet-process plants (per bbl. of cement) *a*

Item	Average-size plants	Large plants
Operating labor	$0.0083	$0.00498
Operating supplies	0.0001	0.00010
Repair labor	0.0035	0.00230
Repair material	0.0020	0.00180
Power	0.0019	0.00163
Total	$0.016	$0.011

a Includes stone, clinker, sand, and iron, stocked and placed in bins.

Open storage, with recovery by overhead or crawler cranes with grab buckets, is used at a few plants. COAL and CLINKER are sometimes stored in covered concrete silos. This practice makes for cleanliness and ease of handling, and answers occasional rigid specifications which require that no moisture come in contact with clinker.

Cost per barrel of cement for storing and handling crushed basic raw materials ranges from 1.1¢ for large plants to 1.6¢ for average-size plants. 1.5¢ is a fair average. See Table 10.

Proportioning *

Proportioning is the first step (blending and burning being subsequent steps) in the chemical control necessary to produce specification cements. It comprises mixing the feed to the raw pulverizers (MAKING THE MIX) in quantities predetermined by calculations

* By M. D. Olver, Vally Forge Cement Co.

which take into account the analyses of the raw materials, the combining ratios in the kiln, and the chemical specifications for the finished cement.

Proportioning starts with the deposits of limestone rock, and of clay and/or shale. Knowledge as to the composition of these in place, ahead of the mining, should be kept up to date by sampling of blast holes. When the deposits are fairly uniform, the raw materials can be held close to an average composition by thin-bedding in storage by means of a traveling tripper on the crushed-rock storage conveyor. If the deposits are variable the high-, low-, and medium-lime rocks should be stored separately after crushing and thereafter be drawn proportionately (as by number of crane buckets) in recovery.

Quartz, hematite, and diaspore are stored separately for correction of SiO_2, Fe_2O_3, and Al_2O_3 respectively. Their analyses are determined as brought in, before unloading and storage.

Calculation of mix is based on one or another of a number of empirical formulas designed, in connection with the conditions of burning, to produce the desired compound composition. The original LE CHATELIER FORMULA (1882) was $(CaO + MgO)/(SiO_2 + Al_2O_3) = 3$, the quantities of the various oxides being taken in mols. This formula was based on the assumption that the ratio of basic to acid oxides in cement is 3, that MgO is equivalent to CaO, and that Fe_2O_3 requirements for lime could be neglected. The NEWBERRY FORMULAS, $CaO = 2.8SiO_2 + 1.1Al_2O_3$, and $CaO = 2.5SiO_2 + 1.6Al_2O_3$, in which the quantities are weight percentages, were used for many years. The first was based on the assumption that the cement compounds were C_3S and C_2A, that MgO did not replace CaO, and that Fe_2O_3 might be ignored; the second varied these assumptions in accord with the finding (*39 #4 AJS 1*) that the aluminate is C_3A, and decreased the silica coefficient to allow for imperfect incorporation due to inadequate raw grinding and mixing. Eckel (*Cements, limes and plasters;* 1928) proposed the formula $CaO + 1.4MgO = 2.8SiO_2 + 1.1Al_2O_3 + 0.7Fe_2O_3$, returning to Le Chatelier's assumption that MgO can act as a base in cement formation and including Fe_2O_3 among the acidic constituents. For a cement with maximum lime content, the clinker compounds are C_3S, C_3A, and C_4AF. The mix formula for such a cement, based on percentage weights, is $CaO = 2.8SiO_2 + 1.65Al_2O_3 + 0.35Fe_2O_3$. Practice shows that with such high lime contents in the kiln feed, free lime is present in equilibrium with the liquefied compounds at clinkering temperatures and that the highest practicable lime content in the mix to produce a cement without free lime is given by the formula $CaO = 2.90SiO_2 + 1.18Al_2O_3 + 0.65Fe_2O_3$. Even this lime modulus (Kühl, *18 Z 833*) cannot be maintained without fine raw grinding, adequate mixing, and time-temperature conditions in the kiln that insure complete combination.

Table 11. Moduli for proportioning mixes for type cements

Type of cement	Iron modulus	Silica modulus	Lime equation *a*
Standard	2.30	2.36	2.10
Moderate-heat	1.32	2.64	2.10
High-early	2.30	2.30	2.30
Low-heat	1.00	3.32	1.94
Sulphate-resistant	1.05	3.62	1.99

a $CaO/(SiO_2 + Al_2O_3 + Fe_2O_3)$.

Moduli. SILICA MODULUS is defined as $SiO_2/(Al_2O_3 + Fe_2O_3)$. IRON MODULUS = Al_2O_3/Fe_2O_3. In both cases weights or percentage weights are used. HYDRAULIC MODULUS equals $CaO/(SiO_2 + Al_2O_3 + Fe_2O_3)$ where the numerical values are expressed in mols. Values of silica and iron moduli and usual lime equations for the various A.S.T.M. type cements are given in Table 11.

Calculation of raw mix for a cement with a prescribed lime modulus (*e.g.*, 2.10) from given raw materials follows: RAW MATERIAL analyses are given in Table 12, Cols. 1, 2, 3. STOICHIOMETRY: Base =

Table 12. Results of calculations for a cement with a given (2.1) lime ratio

Column	1	2	3	4	5	6	7	8
Item	Raw materials			Raw mix	Clinker *d*	Gypsum added *b*	Cols. 5 and 6 *c*	Cement *e*
	Cement rock	Lime-stone	Gypsum					
SiO_2	17.2	1.0	.....	13.7	21.5	.....	21.5	20.7
Al_2O_3	5.6	0.5	.....	4.5	7.0	.....	7.0	6.7
Fe_2O_3	2.0	0.5	.....	1.7	2.7	.....	2.7	2.6
CaO	38.6	53.8	32.5	41.8	65.4	1.3	66.7	64.1
MgO	2.5	1.0	.....	2.2	3.4	.....	3.4	3.3
SO_3	.....	.....	46.5	.....	.....	1.9	1.9	1.8
Loss *a*	34.1	43.2	21.0	36.1	.....	0.8	0.8	0.8
Weight, %	100.0	100.0	100.0	100.0	100.0	4.0	104.0	100.0

a CO_2 and/or H_2O.
b Based on weight of clinker.
c Equals 104% of finished cement.
d Lime ratio = 65.4/(21.5 + 7.0 + 2.7) = 2.09
e Lime ratio = 64.1/(20.7 + 6.7 + 2.6) = 2.13

100 lb. cement rock. Let y = weight of limestone to be added. Write equations, from Cols. 1 and 2, for the weights of the four oxides in the mix, thus:

$$\begin{aligned}\text{Total } SiO_2 &= 0.172 \times 100 + 0.01y\\ \text{“ } Al_2O_3 &= 0.056 \times 100 + 0.005y\\ \text{“ } Fe_2O_3 &= 0.02 \times 100 + 0.005y\\ \text{“ } CaO &= 0.386 \times 100 + 0.538y\end{aligned}$$

Substitute these quantities in the lime-ratio equation (note *a*, Table 11):

$$(38.6 + 0.538y)/(24.8 + 0.02y) = 2.1$$

whence y = 27.2 lb. limestone to be added per 100 lb. of cement rock, or the raw mix is 78.6% cement rock and 21.4% limestone, with the analysis shown in Col. 4. The sum of the nonvolatile oxides in the raw mix (which persist through burning) is 63.9%. Hence the composition of clinker will be the sum of the quotients obtained by dividing the percentages of these nonvolatile oxides in Col. 4 by 0.639 (see Col. 5). When this clinker is ground, 4% of gypsum, based on the clinker, is to be added (Col. 6 = 0.04 × Col. 3), yielding 104 lb. per 100 lb. of clinker (Col. 7), whence the finished cement (Col. 8) is calculated by dividing by 1.04.

Calculating mix from two moduli. Components analyze as follows:

	SiO_2	R_2O_3	CaO	MgO
Limestone.....	2.0	1.0	54.4	0.8
Shale.....	53.0	24.4	7.4	0.1
Sand.....	92.1	5.0	1.6	0.5

Given moduli are: Silica, 2.4; lime, 2.0.

Let y = lb. shale in mix, z = lb. sand, 100 = lb. limestone. Then, per 100 lb. of limestone,

$$SiO_2 \text{ in mix is: } 0.02 \times 100 + 0.53y + 0.921z$$

$$R_2O_3 \text{ in mix is: } 0.01 \times 100 + 0.244y + 0.050z$$

$$CaO \text{ in mix is: } 0.544 \times 100 + 0.074y + 0.016z$$

SILICA-MODULUS EQUATION is: $2.4 = \dfrac{2 + 0.53y + 0.921z}{1 + 0.244y + 0.05z}$

LIME-MODULUS EQUATION is: $2.0 = \dfrac{54.4 + 0.074y + 0.016z}{2 + 0.53y + 0.921z + 1.0 + 0.244y + 0.05z}$

Solving these equations simultaneously, y = 29.53 lb.; z = 2.55 lb. Analysis of mix is then computed as in Table 12*a*.

Table 12*a*. Calculations for cement with two moduli set

Item	Lb.	SiO_2	R_2O_3	CaO	MgO
Limestone.....	100	2.0	1.0	54.4	0.8
Shale.....	29.5	15.64	7.20	2.18	0.03
Sand.....	2.5	2.30	0.12	0.04	0.01
Totals.....	132.0	19.94	8.32	56.62	0.84
Kiln mix *a*.....	64.9	15.1	6.3	42.9	0.6
Clinker *b*.....	100.0	23.3	9.7	66.1	0.9

a Oxide weights are 100/132 times those in preceding line.
b Preceding line changed to 100-lb. basis.

Check:

$$SiO_2/R_2O_3 = 23.3/9.7 = 2.4$$

$$CaO/(SiO_2 + R_2O_3) = 66.1/(23.3 + 9.7) = 2.0.$$

Regulation of quantities of the components of a mix is effected by some form of constant-weight or proportioning feeders (Sec. 18, Art. 23). In wet grinding, the clay is fed as a SLIP (aqueous pulp); Ferris-wheel feeders or orifices on constant-head tanks with agitators are used.

Grinding raw materials

The purpose in grinding the raw materials is to insure completion of the desired reactions in the kiln without being forced to employ excessive temperatures. The BURNABILITY of the charge, *i.e.*, the ease of effecting the thermal reaction, is decreased by >60-μ material, particularly quartz and mica, and is not increased by size reduction below 20-μ. Hence 60-μ should be the limiting size usually sought.

For general discussion of grinding and grinding performances see Secs. 5 and 6.

Best modern cement practice is to grind in closed circuit with wet or dry sand-slime separators, but many plants are still operating with long multi-compartment mills without size guards.

Over the period 1927 to 1942 the earlier plants, *e.g.*, VALLEY FORGE, KEYSTONE, WACO, and NATIONAL, used 3- and 4-compartment mills, about 7×36- to 42-ft., all in open circuit, three of them wet.

The recent wet plants have all been two-stage, with short ball mills in closed-circuit with rake classifiers in the primary stage; the secondary stage in two was a short ball mill in closed-circuit with a bowl classifier, whereas the other three used open-circuit tube mills. Some recent dry plants have installed ball-bearing-type mills (*e.g.*, Babcock & Wilcox) in closed-circuit with air classifiers. Other dry plants, in modernizing the raw grinding departments, have used ball mills, or the suspended horizontal-roll type mills (Bradley Hercules) for preliminary grinding, and tube mills with air separators for secondary grinding.

Table 13. Costs of raw grinding (¢ per bbl. of cement)

Item	Large plants	Average-size plant
Operating labor	$0.0060	$0.0102
Operating supplies	0.0008	0.0009
Maintenance labor	0.0034	0.0079
Maintenance material	0.0185	0.0323
Power at 5 mills per kw-hr	0.0275	.....
Power at 6.75 mills per kw-hr	.....	0.0381
Total *a*	$0.0562	$0.0894

a Costs include filling feed boxes over grinding machines and conveying finished material to storage tanks; they do not cover mill overhead, interest, depreciation, taxes, etc.

Raw-grinding costs (1942) for medium-size wet plants using three-compartment mills, open-circuit, with <3/4-in. feed, grinding to about 92% <200-m., average from 9 to 10¢ per bbl. of cement (29 to 32¢ per short ton of rock). At large wet and dry plants, using modern closed-circuit grinding methods, grinding through the same range costs from 5.6 to 7¢ per bbl. of cement (equivalent to about 620 lb. of rock) or from 18 to 22.5¢ per short ton. See Table 13.

Blending

Wet blending. Only under exceptional circumstances is the proportioning done in regulation of the feed to the raw-mix grinding mills sufficiently accurate to constitute the final control on the feed to the kilns. Usual modern procedure is to provide storage for the ground raw mix; for separate supplies of high-silica and high-iron materials, and to keep additional separate supplies of high- and low-lime material on hand for any necessary raw-mix corrections. Suitable handling equipment draws raw mix and corrective material from the respective supply tanks and transfers to blending and mixing tanks from which, in turn, the corrected mix is transferred to the kiln feeders.

In wet-process plants it is both possible and practicable to control the lime-silica ratio by means of centrifugal classification (Sec. 8, Art. 13) or by flotation of the raw mix. When alumina is present in the form of mica, some adjustment of alumina content is also possible by rejection of mica; this makes for soundness in the cement by lowering the C_3A and eliminating this relatively coarse ingredient from the kiln feed. Graphitic material may also be eliminated by flotation. See Sec. 12, Arts. 52, 53, 54.

In general any present-day cement is obtainable by variation of composition of raw mix through the following relatively small ranges of the various oxides: SiO_2, 6%; Fe_2O_3, 4.5%; Al_2O_3, 4%; CaO, 8%; MgO, max. content, 4%. By these variations C_3S is varied from 20 to 70%; C_2S from 0 to 60%, C_3A from 2 to 18%, and C_4AF from 3 to 18% (*148 A 374*).

Flotation of cement raw mix normally involves the following steps: (*a*) Classification by the use of hydro-bowls and centrifuges to concentrate the minerals to be retained or discarded. Hydro-bowls are used when separation at 325-m. or larger is adequate; centrifuges when separation at smaller sizes is desired. (*b*) Froth flotation of the coarse or fine calcareous material to make a relatively rough separation from the gangue minerals, usually quartz or mica, or both. COLLECTING AGENTS used are oleic acid, fish-oil fatty acid, or saponified or soap-stabilized tall oil, added in minute quantities in stages, with alcohol or resin-type FROTHING AGENTS. If graphitic material is present in sufficient amount to harm flotation of the calcitic minerals, it is either DISPERSED by the use of goulac or similar compounds; or removed first by flotation with a light fuel oil or kerosene as collector, and an alcohol frother.

What is done in any particular case by the combination of classification and froth flotation depends upon the size distribution of the minerals in the ground raw mix, and the blend that is desired for burning. The basic aims are: (*a*) to produce a float of the desired lime-silica ratio, or one that is on the high-lime side, which can be corrected by blending back a portion of fine low-lime material; (*b*) to remove mica and coarse quartz as completely as possible, because both either burn incompletely or prolong burning time unduly; (*c*) to separate fine quartz and mica, in order to obtain the fine quartz for blending back.

Example. In treating Lehigh Valley (Pa.) argillaceous limestone, it is desired to raise the lime, lower the alumina, and retain the quartz. The quartz concentrates in a >30-μ fraction, and the mica concentrates in the <30-μ fraction. Hence the ground rock is centrifuged to separate at 30-μ. The fine fraction is first floated to remove the carbonaceous material, and again floated to leave a micaceous

tailing, which is discarded. This raises the lime and lowers the alumina. The >30-μ fraction, containing the bulk of the quartz, is, of course, not processed.

If the quartz and mica are of about the same particle size, and it is desired to retain quartz and discard mica, it is usual to float the calcareous material, leaving both quartz and mica together in the tailing, then to float the mica from the quartz, using a cationic collector of medium molecular weight, *e.g.* laurylamine. The quartz is then blended back, and the mica is dried and sold.

Other methods of blending raw materials are used by wet plants, particularly when the materials do not need to be processed to produce blending stocks.

At UNIVERSAL ATLAS CEMENT CO., Leeds, Ala., the raw materials are limestone, shale, and sandstone. These are accurately proportioned from separate bins by weighing belts, ground in two stages in short ball mills in closed-circuit with classifiers, then dewatered in two @ 200-ft. thickeners in series. The variation from the HOLDING POINT (percentage of CaO in raw mix) is extremely low and the slurry is dewatered to a point as low as it can be pumped and handled. At HAWKEYE PORTLAND CEMENT CO., Des Moines, Iowa, the raw materials, limestone, shale, silica, iron, and diaspore, are stored in separate bins and accurately proportioned by weighing feeders. This raw mix is ground in open-circuit and run to agitated slurry tanks where chemical correction can be made, if necessary; usually it is unnecessary.

Blending calculations are based on simple stoichiometry which starts from the chemical specifications for the finished cement. The gypsum and/or other subsidiary ingredients added in clinker grinding (Art. 5)— and the ash from the fuel, if powdered solid fuel is used—are deducted from this analysis to obtain the burned residue from the blend to the kiln. This is then adjusted to kiln-feed analysis on the assumption that all of the CaO and MgO in the residue came from $CaCO_3$ and $MgCO_3$, and that combined water in the clay or other alumina-bearing material is negligible. The proportions of the raw mixtures available which are necessary to produce kiln feed of the desired composition are then calculated from the analyses of these mixtures.

Example. To produce A.S.T.M. Type I (Federal 191-B) from ground products having the compositions shown in Table 14.

Table 14. Analyses used in calculation of a blended slurry to kiln

Item	Percentages						
	Cement	Clinker + ash	Ash	Clinker	Kiln feed	Raw rock	Processed rock
SiO_2	21.0	21.9	41.6	21.7	13.7	16.2	8.5
Al_2O_3	5.9	6.1	32.5	5.8	3.7	4.4	2.3
Fe_2O_3	3.1	3.2	20.0	3.0	1.9	2.0	1.8
CaO	63.4	64.6	1.7	65.2	41.3	39.4	45.3
MgO	4.0	4.2	.....	4.3	2.7	2.6	2.9
CO_2	.....	.....	.....	.....	35.4	33.7	38.8
SO_3	1.8	.....	.....	.....	.....	.....	.....
Loss *a*	0.8	.....	4.2	.....	1.3	1.7	0.4

a And/or undetermined.

Solution: The SO_3 content of the *cement* corresponds to 1.8/0.465 = 3.9% of gypsum (mol. wt. $CaSO_4 \cdot 2H_2O$ = 172; SO_3 = 0.465). Hence *clinker* + *ash* is 96.1% of the *cement* and the analysis comprises the corresponding quantities of the *cement* analyses divided by the factor 0.96. Average *ash* from the fuel used analyzes as shown; the percentage in *clinker* + *ash*, based on average fuel consumption at the plant, is 1.2%. Deducting the weights of the various ingredients of this 1.2 lb. of ash per 100 lb. of clinker and ash from the *clinker* + *ash* leaves the respective weights in 98.8 lb. of clinker, and this, recalculated to a percentage basis, is shown as *clinker*. When this clinker was burned the loss was CO_2 in the proportions of 44 parts per 56 parts CaO, and 44 parts per 40.3 parts MgO, a total of 56.7 lb. CO_2 per 100 lb. of *clinker*. Experience with the blending stocks has shown that kiln feed made from them contains about 1.3% material undetermined by the standard analyses. Hence 100 lb. of *clinker* plus 56.7 lb. CO_2 equals 98.7% of kiln feed, whence *kiln feed* to produce the desired finished cement should have the analysis shown in Table 14. Available for blending are *raw rock*, and *processed rock* obtained by classification and flotation. The quantities of each to be taken are determined by a weight balance on CaO; thus if x is the weight of processed rock to be taken, $0.453x + 0.394(1 - x) = 0.413$, from which $x = 0.32$ or 32%, and the weight of raw rock necessary is 68%.

Wet-blending plant consists of a number of tanks of suitable capacity, with provision for agitation, and the necessary pumps and piping for transfer from tank to tank.

Layout for VALLEY FORGE CEMENT CO. is shown in Fig. 2 (burning capacity, 2.43 bbl. clinker per min.). Tanks are steel, 20×23 1/2-ft. inside, with flat concrete bottoms, fitted with Dorr agitating mechanisms making 2 r.p.m. Tanks are normally filled to a depth of 21 ft. and are drawn down 20 ft. in emptying. Usual slurry is 64.5% solids. The tanks are filled from the grinding plant by 3-in. Wilfley pumps working against a pumping head (est.) of 90 ft., driven by 40-hp. motors, and delivering

through 5-in. pipe at the rate of 123 g.p.m. (0.5 gross ton solid). Circulating pumps are 4-in. Wilfleys driven by 40-hp. motors and delivering through 6-in. pipe. With two kilns burning, the plant handles 2.02 long tons of solid per min. (503 g.p.m.) with a consumption of 41 hp.

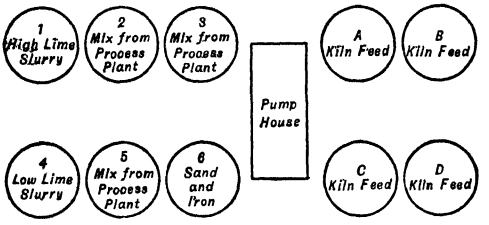

FIG. 2. Blending tanks at VALLEY FORGE CEMENT CO.

Operation involves filling a stock tank (numbered) with slurry, sampling and analyzing, and then pumping the proper quantities from two or more stock tanks to a kiln-feed tank (lettered), where, after thorough agitation, the charge is sampled and analyzed. If correction is necessary it is made by transfer of a suitable quantity of the necessary material from a stock tank. The charge is again mixed and resampled. If composition is correct, the tank is released for kiln charging; otherwise it is further corrected until the desired composition is attained.

Costs of wet-process blending and storage (operating only, 1942) are about 3.2¢ per bbl. (10.2¢ per short ton) for average-size plants and 2.1¢ per bbl. (6.7¢ per short ton) for larger plants. Breakdown is given in Table 15.

Correcting unsuitable rock. Few cement-rock deposits are of suitable composition and uniformity for day-in-and-day-out production of a high-grade cement of any type, and none will produce raw mixes for a variety of types without correction. Recent cement-buying practice is to specify composition much more closely than is indicated in Table 2, and to multiply types in the attempt to tailor the cement to the use. As a result, correction through blending is a necessity at substantially all plants. Old practice was to bring in silica, mill scale (for iron), and—unless an exceptionally high-lime rock could be quarried selectively on the property—limestone, and to blend these in as required. This is still necessary in dry-process plants. In wet-process plants, however, it is always possible, by rejecting a selected part of the mineral constituents, to produce blending stocks with which to meet all requirements of the special types, except those for high iron. Whether correction by addition or correction by rejection will be more economical in a given case depends upon the specification, the bulk of the rejection, the prices of addition materials, and the cost of the rejected material (which includes value in deposit, mining, crushing and grinding, and separating the reject).

Table 15. Costs of wet-process blending *a*

Item	Average plants	Large plants
Operating labor	$0.0170	$0.0083
Operating supplies	0.0003	0.0003
Repair labor	0.0029	0.0024
Repair material	0.0026	0.0021
Power	0.0088	0.0080
Total	$0.032	$0.021

a Includes pumping to kiln feeders, and mechanical or air agitation; average moisture, 34 to 35%.

Comparison of the quantities involved by the two methods, when employed for the production of a given cement from a given rock, is shown in Tables 16, 17, 18. The addition method would involve supplying 54 t.p.d. of sand, 10 t.p.d. of iron scale, and 304 t.p.d. of limestone (see Table 16). The flowsheet for correction by rejection is shown in Fig. 3. Quantities and analyses are shown in Table 17. The method involves supplying 54 t.p.d. of sand and 6 t.p.d. of iron scale, and rejecting 110 t.p.d. of material which, in a cost comparison, must be charged off as cement rock, and charged with its proportion, on a tonnage basis, of the costs of mining, crushing and grinding, and the entire cost of separation. Analyses of the cements producible from the two feeds, with proper allowances for coal ash and gypsum, are given in Table 18.

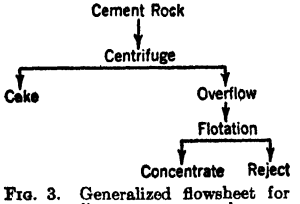

FIG. 3. Generalized flowsheet for grading-up cement rock.

Agitators. Maintenance of uniform size distribution (and, concomitantly, uniformity in chemical composition) throughout thick slurries in storage for kiln feed is not a simple problem, and it becomes more difficult the larger the limiting size of solid and the greater the storage capacity provided. In general, the deeper the tank for a given volume the easier it is to maintain uniformity therein. The usual arrangement is a combination of slow rotary agitation and bottom-introduced air, which may be injected from a plurality of jets, fixed or moving, or may be combined with air-lift piping. In large shallow tanks it is usual, also, to circulate pulp by pumps, taking suction at points on the bottom where coarse material tends to segregate, and returning over areas where there is a deficit of coarse. Arrangements are legion, and comparative performance data lacking.

Table 16. Blending by addition for a daily production of 3,000 bbl. of Federal Spec. SS-C-206-a

Material	Sand	Iron scale	Limestone	Cement rock	Kiln feed
Tons per day	54	10	304	562	930
Analyses	Percentages				
SiO_2	96.1	.....	1.5	14.5	14.8
Al_2O_3	2.1	.....	0.8	5.1	3.5
Fe_2O_3	1.2	105	0.5	1.8	2.5
$CaCO_3$	0.2	.....	96.0	72.7	75.3
$MgCO_3$	.....	.....	1.0	4.8	3.2
Silica ratio	29.1	.....	1.2	2.1	2.5

Table 17. Blending by rejection for a daily production of 3,000 bbl. of Federal Spec. SS-C-206-a

Material	Sand	Iron scale	Cement rock	Centrifuge		Flotation		Kiln feed *a*
				Cake	Overflow	Concentrate	Reject	
Tons per day	54	6	980	446	534	424	110	930
Analyses	Percentages							
SiO_2	96.1	.....	14.5	13.6	15.4	5.8	51.2	14.8
Al_2O_3	2.1	.....	5.1	3.4	7.0	3.6	20.0	3.4
Fe_2O_3	1.2	105	1.8	1.6	2.0	1.7	3.1	2.3
$CaCO_3$	0.2	.....	72.7	76.4	68.3	84.4	12.4	75.3
$MgCO_3$	0.1	.....	4.8	4.6	5.0	2.7	9.2	3.4
Silica ratio	29.1	.....	2.1	2.7	1.7	1.1	2.2	2.6

a Sand, iron scale, centrifuge cake, flotation concentrate.

Dry-process blending. In dry plants the raw materials, including sand and iron, usually are proportioned after crushing, but before grinding, by automatic weighing feeders. The raw ground mix is then thoroughly mixed by a blending system to average slight variations in the chemistry. The best procedure is to maintain continuous automatic sampling of the stream of ground raw mix going to raw-mix storage, resetting the grinding mill feeders, as necessary. An interval of high analysis followed by one of equally low analysis, or *vice versa*, will average off in drawing from storage, if the feed to storage has been in a succession of thin layers, since the draw tends to cut down vertically through the layers.

Table 18. Analyses of cements from kiln feeds given in Tables 16 and 17

Item	Addition method (Table 16)	Rejection method (Table 17)
SiO_2	22.1	22.1
Al_2O_3	5.4	5.3
Fe_2O_3	3.9	3.6
CaO	62.9	63.1
MgO	2.1	2.3
SO_3	1.8	1.8
H_2O	0.8	0.8
Undetermined	1.0	1.0
Al_2O_3/Fe_2O_3 [3]	1.4	1.5
SiO_2/R_2O_3	2.4	2.5
C_3S	41.0	43.0
C_2S	32.0	31.0
C_3A	8.0	8.0
C_4AF	12.0	11.0

Fuller-Kinyon system of dry blending (Fig. 4) may be made automatic. Ground raw mix from mills *a* is discharged continuously into a screw conveyor *b* and thence by a Fuller-Kinyon dry pump *c* (see Sec. 18, Art. 11), which discharges through line *d* into the top of the raw-storage silos *e*. (Note that with the piping as arranged either row of silos may constitute raw storage.) Discharge from *d* should alternate successively into the three silos *e* for time intervals short enough to lay down each increment to a depth of not more than 12 in. Blending and mixing are effected by drawing from silos *e* into screw conveyor *f*, which delivers by cross screw *g* into dry pump *h*. This pump next delivers, again in alternate thin layers, into silos *i*, through line *j*. Drawing these again cuts across the layers, effecting further mixing. When the composition in silos *i* is right and the mixture uniform, they are drawn again through screw lines *k* and *l* into pump *h* and sent through line *m* to the kiln-feed bins *n*. By using electro-pneumatic valves on time control this system can be made automatic, subject, however, to maintenance of an over-all constant average composition of raw mix flowing in line *d*.

Cost of operation (excluding all overhead) of a Fuller-Kinyon dry-blending plant is about 0.0075¢ per bbl. of cement when handling 50 short t.p.h., including pumping from the blend bins to the kiln-feed boxes with 200% circulating load.

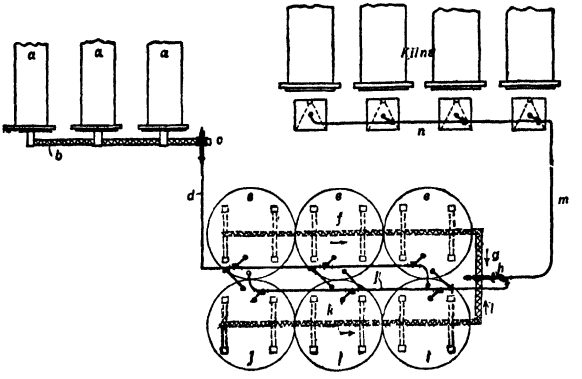

FIG. 4. Dry-process blending, Fuller-Kinyon system.

HEAT TREATMENT

Heat treatment is the essence of cement manufacture; the steps preceding it are common to many other processes and characteristic of none; those following are even less distinctive.

Heat treatment comprises both heating the prepared mix at such a rate, to such a minimum temperature, maintained for such a time, that the desired reactions will occur, and then cooling at such a rate as to control the crystallization and transformations of the resulting compounds.

3. CHEMISTRY OF THE KILN

Heating (BURNING) is invariably carried out in a rotary kiln (Art. 4) of such length and diameter, and run at such a speed, that, at the temperatures prevailing, time is allowed for completion of the principal conversion reactions. The kiln reactions, in order of occurrence, are: (1) evaporation of uncombined water; (2) dehydration of clay and calcination of $MgCO_3$; (3) calcination of $CaCO_3$; (4) reaction between the solid oxides. Since each of these reactions requires a higher temperature than the one preceding it, the kiln is fired at the discharge end, so that the stream of material flows through successively hotter zones. Fig. 5, based on thermocouple measurements, gives approximate gas and solid temperatures in a 10×200-ft. wet-fed kiln (*10 Z 681*). It may be taken as generally representative of the temperature variations in the different zones in any kiln.

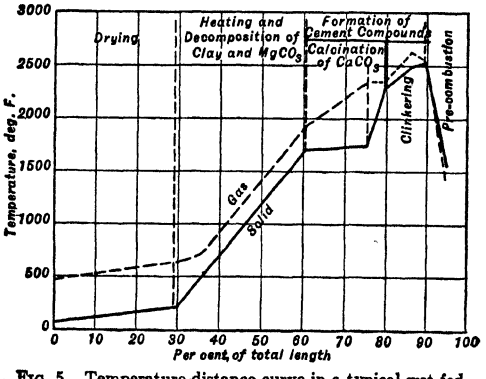

FIG. 5. Temperature-distance curve in a typical wet-fed cement kiln.

Evaporation is a problem in drying (Sec. 17). The special problems met in the cement kiln are the fineness of the solid and the liquid character of the feed, which results in failure to shower. GAS VELOCITIES are about 15 f.p.s. maximum, usually about 10 f.p.s. Surface exposure is obtained by chains hung to the inside of the shell (see Fig. 7). These become coated with thin layers of slurry, which, of course, dry more rapidly than a stream flowing along the bottom of the shell. The drying section usually occupies 20 to 30% of the

length of a wet-fed kiln, the range being determined by the effectiveness of the means for increasing drying surface; little or no drying time (and length) need, of course, be provided for dry feed. Heating in this section is substantially all by conduction; radiation is practically completely shaded off by dust. Gas temperature is such as to give a stack temperture of 350 to 500° F., this relatively high range being maintained to insure against condensation in the flue system, with consequent high corrosion. Despite the relatively large mean temperature difference prevailing in the drying section, heat transfer tends to be low with wet feeds. Solid temperatures in this section rise but little above 212° F., due to the high latent heat of evaporation of water.

Heating section occupies another ± 30% of the effective kiln length. With means for closer measurement there would be small breaks in the solid-temperature line (Fig. 5) corresponding to the absorption of heat by the endothermic reactions of calcination of $MgCO_3$ (at about 750° F.) and of dehydration of the clay (at about 930° F.), but owing to the relatively small quantities involved, these do not affect the average slope of the heating curve appreciably.

Calcination of $CaCO_3$. The vapor pressure of CO_2 in $CaCO_3$ (DECOMPOSITION PRESSURE) reaches atmospheric pressure at about 1650° F. The reaction is endothermic and involves a large percentage of the solid in the kiln. Hence for a considerable time (about 15%, Fig. 5) substantially all of the heat input to the solid is consumed in driving this reaction, the temperature of the solid remains substantially constant, and the gas temperature drops sharply through loss of the absorbed heat. Fig. 6 generalizes composition analyses of samples so taken as to be as nearly as possible representative of the material at different points in relatively small wet and dry kilns (*18 Z 886; 24 IEC 332*). Calcination in the wet kiln starts between 60 and 65% of the distance from the feed end and corresponds reasonably to the showing of Fig. 5 (in a different wet kiln). The start is shown to come much earlier, of course, in the dry kiln. Both the wet and dry curves of Fig. 6 indicate that the inference drawn in zoning the kiln in Fig. 5 is not wholly justifiable, but that reaction to form cement compounds starts as soon as any lime is freed, and that while the 76% point of length in Fig. 5 may mark the end of substantial calcination, it does not mark the beginning of reaction. Free lime does not appear in appreciable amounts until the decrease in acidic reactants, plus the acceleration in calcination, caused by additional heat from the cement reaction and close approach to the radiant zone, causes the rate of calcination to surpass the rate of reaction. The free-lime content then passes through a maximum, from which it falls rapidly with exhaustion of $CaCO_3$.

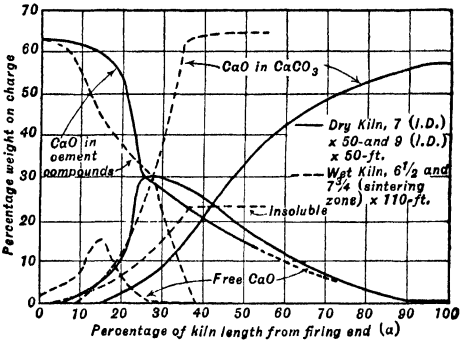

Note: Kiln length and time are not interchangeable as ordinates, owing to changes in kiln diameter.

FIG. 6. Reaction-distance curves for cement kilns.

Cement reaction. The principal and controlling ingredients of all cements are CaO, SiO_2, Al_2O_3, and Fe_2O_3. These, all in finely divided solid form, undergo first solid-solid reactions in the kiln, and later, reactions in a partial melt to form the four major compounds: C_3S = tricalcium silicate ($3CaO \cdot SiO_2$); C_2S = dicalcium silicate ($2CaO \cdot SiO_2$); C_3A = tricalcium aluminate ($3CaO \cdot Al_2O_3$); and C_4AF tetracalcium aluminoferrite ($4CaO \cdot Al_2O_3 \cdot Fe_2O_3$). The relative and absolute proportions of these compounds are, as has been developed (Art. 1), controlling in determining the character of the resulting cement; what these proportions will be in any case is determined in large part by the proportions of the mix, but burning temperatures and cooling rates also have an effect.

Calculation of compounds. The existence of the cement compounds and their mineralogical identities has been established by the microscope and X-ray, by segregation and chemical analysis (*27 IEC 512*), and by phase-diagram studies based on approximations to melting points (*40 Pro. ASTM 986*). The method of estimation of the relative quantities of each from an oxide analysis, as originated by Bogue (*1 IECA 192*), follows:

1. Estimate C_4AF from total Fe_2O_3. Ratio $C_4AF/Fe_2O_3 = 3.04$.
2. Deduct Al_2O_3 in C_4AF from total Al_2O_3. $Al_2O_3/Fe_2O_3 = 0.64$.
3. Estimate C_3A on remaining Al_2O_3. $C_3A/Al_2O_3 = 2.65$.
4. Deduct sum of free CaO shown in analysis and CaO in gypsum, C_4AF and C_3A from total CaO o analysis. $CaO/SO_3 = 0.70$; $CaO/C_4AF = 0.46$; $CaO/C_3A = 0.62$. Call this C_R.

5. $C_2S = 4.07C_R - 7.60S$ (S = $\%SiO_2$ in cement).
6. $C_3S = 8.60S - 3.07C_R$.
7. $CaSO_4 = 1.70(SO_3)$.
8. MgO = same as in cement.
9. Loss = same as in cement.

Lea and Desch (*Chemistry of cement and concrete, 117*) propose the following corrections to the Bogue estimates. They assert that the composition thus corrected is accurate within ±2% for a clinkering temperature of 1,400° C., and that the figures are not much affected by higher clinkering temperatures, but may be if the temperatures are much lower than 1,400°. Let $x = \%Al_2O_3$ in cement and $y = \%Fe_2O_3$. For $x/y = 0.9$ to 1.7, no correction. For $x/y = 1.7$ to 6.1, add to the Bogue values for C_3S the quantity $(1.8x - 2.8y)$; for C_2S, $(2.1y - 1.4x)$; for C_3A, $(2.5y - 1.6x)$; for C_4AF, *nil*. C_5A_3 may also be expected in the amount $1.2x - 1.8y$. Negative correction values are to be added algebraically.

Composition figures ordinarily given in the literature are original Bogue figures uncorrected. Neither these nor the corrected figures represent the compound composition when cooling of the clinker is so rapid as to freeze considerable proportions of clinker liquid as a glass.

Corresponding analyses of raw mix, clinker, and cement for several typical type cements are given in Table 19.

Table 19. Typical analyses for type cements

Item	Percentages					
	A.S.T.M. No. 1	High-early	Moderate-heat	Low-heat	Sulphate-resistant	N. Y. Water Board
RAW MIX						
SiO_2	14.1	13.3	14.6	16.5	16.5	15.2
Al_2O_3	4.2	4.0	3.2	2.5	2.3	3.4
Fe_2O_3	1.8	1.8	2.3	2.5	2.2	2.3
CaO	41.5	42.8	41.4	41.0	41.2	41.8
MgO	2.4	1.8	2.5	2.0	2.3	0.8
Loss *a*	36.0	36.3	36.0	35.5	35.5	36.5
CLINKER						
SiO_2	22.1	20.9	22.8	25.6	25.6	24.0
Al_2O_3	6.5	6.3	5.0	3.9	3.6	5.3
Fe_2O_3	2.9	2.8	3.6	3.9	3.4	3.6
CaO	64.8	67.2	64.7	63.5	63.9	65.8
MgO	3.7	2.8	3.9	3.1	3.5	1.3
CEMENT						
SiO_2	21.0	19.8	21.9	24.6	24.6	23.2
Al_2O_3	6.2	6.0	4.8	3.7	3.5	5.1
Fe_2O_3	2.7	2.6	3.5	3.7	3.3	3.5
CaO	62.8	65.3	63.5	62.3	62.7	64.3
MgO	3.5	2.6	3.7	3.0	3.4	1.3
SO_3 *b*	1.8	2.4	1.8	1.8	1.7	1.4
Loss *c*	2.0	1.3	0.8	0.9	0.8	1.2
COMPOUNDS *d*						
C_3S	45.4	64.4	49.6	31.4	35.0	42.1
C_2S	26.0	8.2	25.4	46.9	44.2	34.8
C_3A	11.8	11.5	6.8	3.5	3.7	7.6
C_4AF	8.2	7.9	10.6	11.2	10.0	10.6
$CaSO_4$	3.1	4.1	3.1	3.0	2.9	2.4
MgO	3.5	2.6	3.7	3.1	3.4	1.3
Loss *c*	2.0	1.3	0.8	0.9	0.8	1.2

a Principally CO_2; also includes "undetermined."
b After addition of gypsum in grinding clinker.
c Primarily minor constituents, *e.g.*, TiO_2, P_2O_5, K_2O, Na_2O, H_2O, undetermined.
d For method of calculation see p. 16.

Formation of cement compounds. Prior to the presentation of the evidence described in the preceding paragraph, the beginning of the reaction zone was customarily placed at the break in the heating curve at about 1,750° F. (Fig. 5). The rapid temperature rise beginning at this point is due to the exothermic character of part or all of the compound-forming reactions (±180 B.t.u. per lb. of clinker; *11 Z 245*). The next break, at about 2,280° F., marks the beginning of fusion of the cement compounds and the beginning of clinker formation. The fall in rate of temperature rise, here in the hottest part of the kiln, is due both to the absorption of heat of fusion and to depletion of the supply of the reactants which have been contributing reaction heat to the sensible-heat supply.

The final break in the temperature curve marks completion of the exothermic reaction and cessation of that heat supply, passage beyond the combustion zone and contact with the cool gas supply, and absorption of further heat of fusion from the hot solid.

Size of raw mix. Initial cement-forming reactions are of solid-solid type. Hence they are limited to points of contact between the reactants, and subsequent reaction can proceed only so fast as the initial reactants or the intermediate reaction products can diffuse through the solids. It follows that initial reaction rates are dependent upon the sizes of the particles in the raw mix, since these determine not only the number of points of reaction but the linear distances through which diffusion must take place before complete conversion can occur. The burnability of a mix increases with decrease in size down to about 20-μ, but the rate of increase falls markedly at about 60-μ. Since the difficulty and expense of grinding increase rather markedly as the limiting size approaches 60-μ, plant costs determine how far it is advisable to go in size reduction. At the old limiting size of 100-m. (147-μ), excessive kiln temperatures and long times were necessary to insure complete burning, especially when, as was normally the case, the coarsest grains were quartz and mica.

Burnability of kiln feed can be checked and controlled by a simple laboratory test which consists in burning small pellets of kiln feed in a globar-type electric furnace capable of holding plant kiln temperatures, test time-factor being made comparable to the time-factor in the hot zone in the plant kiln. Burned test clinkers are then subjected to analysis for uncombined calcium oxide, the known limits for which have been established by plant practice and corollary tests. Regular performance of this test uncovers any changes in burning characteristics of kiln feed. Curves such as those shown in Fig. 6A, readily established for a given plant, make it possible to locate the causes of such changes with considerable precision.

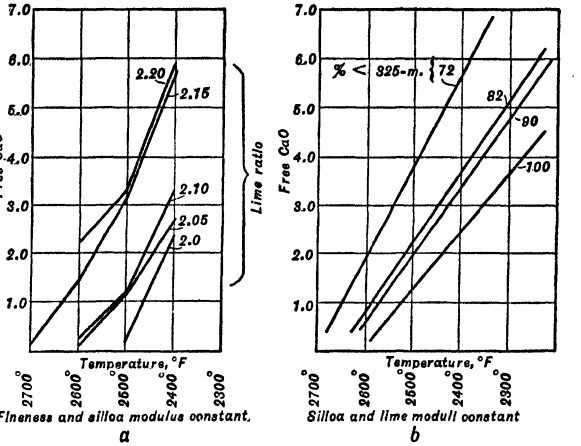

FIG. 6A. Burnability curves for VALLEY FORGE CEMENT CO. (*after M. D. Oliver, PC*).

4. BURNING

Rotary kiln (Fig. 7) is invariably used. It is a rotating open-ended cylindrical shell *a* with its ends projecting into fixed feed and discharge structures. Shell diameter ranges from 6 to 15 ft. and length from 60 to 500 ft.; predominating diameter in modern plants is 10 to 12 ft.; length averages 350 ft. Diameter is frequently enlarged through a portion of the length near the discharge end in order to give increased time-factor for calcination and reaction.

Shell *a* is of 1/2- to 1-in. steel plate, riveted or welded, and lined throughout with fire brick, varying in character at different points. It is mounted, at a slope of 3/8 to 5/8 i.p.f., on hardened-steel tires *b* and rollers *c*, support piers being spaced 60 to 75 ft. apart, according to the weight of the shell and allowable loads for the type of roller chosen. One or more thrust rollers are provided. Drive is usually by d.-c. motor *d* with reducing gear *e* and flexible coupling *f* to a pinion *g* and ring gear *h* (with or without intermediate gearing *i*), the assembly being suitably mounted near the halfway point of the shell length to reduce torque. SPEED is in the range of 10 to 35 f.p.m. peripheral inside lining. LINING is ordinarily alumina brick, 70% Al_2O_3 for the clinkering zone and 50 or 60% elsewhere; magnesite brick is sometimes used in the high-temperature zones. Thickness is 6 to 9 in., depending largely upon the diameter of the kiln. A layer of Sil-O-Cel or asbestos insulating brick may be laid between brick and shell in the preheating and calcining zones. Life of lining in the hot zones is in the range of a few weeks to two years; with suitable brick for the particular rock and with careful operation, life should not be less than 6 mo. Chemically bonded magnesite lining, which may cost $100 per ft. of kiln against $40 per ft. for 70%-alumina brick, is reported (*41 #4 RP 89*) to have lasted 1 yr. *vs.* 3 mo. for the brick. Slope averages 1/16 i.p.f. in modern kilns; it averaged 9/16 i.p.f. in the period 1927–1931.

Feed-end housing serves the purposes of introducing feed, collecting dust, and acting as a junction in the gas-flow line between the shell and the flues leading to the stack. In the kiln shown in Fig. 7 the housing comprises a light paneled-steel stroke box *j*, suitably lined for insulation and protection against corrosion, with provision as shown for a slurry-feed pipe, having a hopper bottom for drawing off col-

lected dust, and a side outlet to the stack, usually via an exhaust fan. The end of the shell projecting into the smoke box is provided with peripheral gas outlets *k*, which serve to decrease gas velocity through the collared-down end of the shell. A rubbing ring *l* on the outside of the shell, against which fixed packing held in a ring on the face of the smoke box bears, forms a seal. Measuring pot *m* is so proportioned and box *n* so baffled as to seal against gas escape in this direction. With dry feed, an enclosed star feeder (Sec. 18, Art. 22) or the like is used as a seal on the feed line.

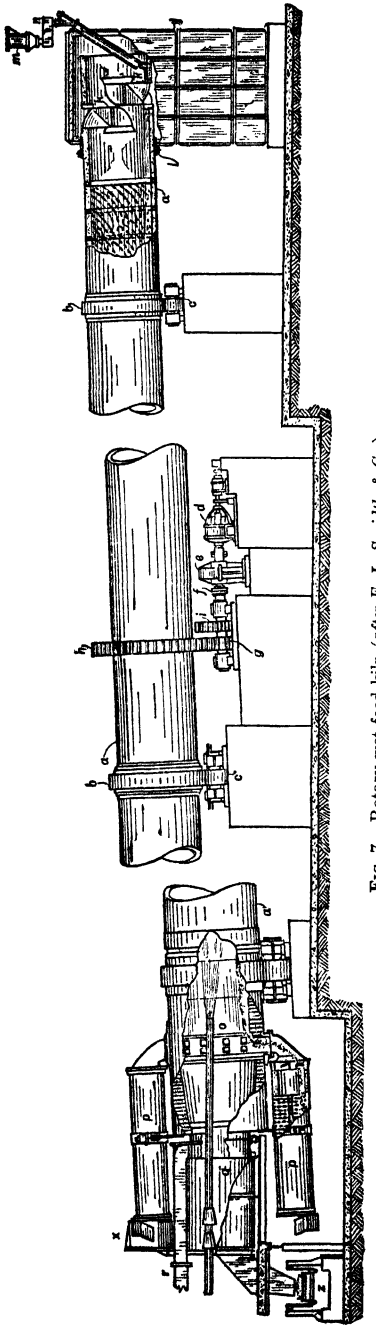

FIG. 7. Rotary wet-feed kiln (*after F. L. Smidth & Co.*).

Discharge-end housing provides for discharge of clinker and introduction of fuel and air. In the form shown in Fig. 7, clinker discharges through ports *o* near the end of the shell to a Unax cooler *p* (p. 23). The kiln shown, arranged for burning powdered coal, has an end shield *q* with an outer shell at one end to provide an air-heating conduit through which air may be forced and thus pass via conduit *r* to dry the coal.

Fig. 8 shows an arrangement of apparatus and piping for the firing end of an oil-fired kiln using the heat in the clinker for preheating secondary air. Clinker discharges from the end of the kiln against baffle wall *a* and thence onto grate *b* of a reciprocating-grate cooler. Secondary air, blown in by fan *d*, enters under grate *b* into a chamber defined by the floor of the cooler and a transverse baffle under the grate at *e*, and passes up through the grate and hot clinker and thence behind baffle *a* into the discharge-end housing and into the kiln. The suction pipe *f* for the primary-air fan *g* opens into the discharge housing, and is also branched to the atmosphere, with a temperature-controlled damper at *h* for proportioning the supplies to fan *g* to maintain the desired temperature. Primary air delivers through pipe *i* to the blast pipe *j*. Fuel-oil pump *k* takes suction through line *l* on the supply tank and delivers through exchanger *m*, in exchange with steam from boiler *n*, and thence through meter *o* to the burner. Additional air for final cooling of clinker is delivered by fan *p* and a floor flue under the discharge end of the cooler grate and passes to stack *c*. Cooled clinker is transferred on shaking conveyor *q* to clinker pit *r*.

Air temperatures. Primary air for coal firing with unit mills ranges from 100 to 170° F.; with coal pulverized in a central station and fed from bins, it is held at 200 to 250° F.; with fuel oil it varies. Secondary air, using recuperator coolers, ranges from 900 to 1,000° F. Saving in fuel from such preheating is about 20% maximum.

Drying section. Fig. 7 shows an arrangement of chains hung from cast-iron liner rings, which are used to elevate and suspend wet slurry in relatively thin films in the path of the hot gases. Chains are of 1/2- to 3/4-in. steel rod, in links about 2 in. wide and 3 in. long. In the 350-ft. kiln illustrated the chain system would extend 75 or 80 ft. and would save an additional 70 or 75 ft. of kiln length, with an economy in fuel consumption of 11 or 12%. Fuel saving may be 15 to 18% when chains are installed in a shorter kiln. Wet kilns are frequently provided with lifters and a framework extending across the kiln section, the combination serving to shower the material through the gas stream. Short kilns are inefficient unless special equipment, to facilitate heat transfer, is used (*e.g.*, the Grudex or Lepol system) or unless used with waste-heat boilers, when the power thus generated compensates for the inefficient use of the heat in drying. When electric power is purchased, some efficient form of drying should be used perforce, if a plant is situated in a competitive area.

Feeding of wet slurry is usually done by a regulating feeder of the Ferris-wheel or spiral-scoop type

taking from a constant level tank in circuit with a surge tank. Delivery is through a measuring pot and gas seal as described above. Dry mix is usually fed by screw conveyor.

Fuel is largely a matter of availability. Of 20 kilns in recent plants, 14 use powdered coal, one oil, and the remainder natural gas. It is customary, however, particularly where the fluid fuels are locally available, to provide for using either of these and, usually, for

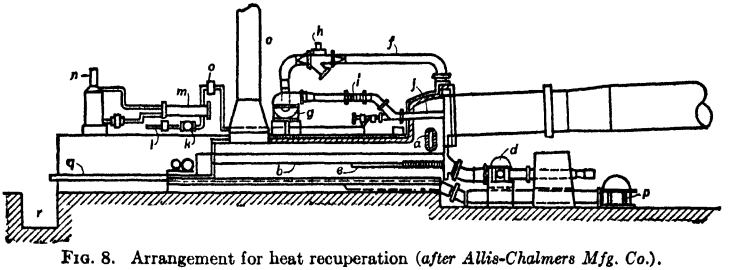

FIG. 8. Arrangement for heat recuperation (*after Allis-Chalmers Mfg. Co.*).

powdered fuel also. Draft may be obtained either by suction fans or by stack. The former method provides the more uniform draft and insures sufficiency at all times. Fuel consumption in an efficient wet kiln with instrument control and recuperator coolers is about 1,000,000 B.t.u. per bbl. of cement. Of this 50 to 55% is used for evaporation of the water from slurries containing about 35% moisture. Average consumption for less modern kilns with coal firing is 90 to 100 lb. of 13,500 B.t.u. coal per bbl. of cement.

Distribution of heat consumption in a wet-process kiln with Unax cooler is shown in Fig. 8A.

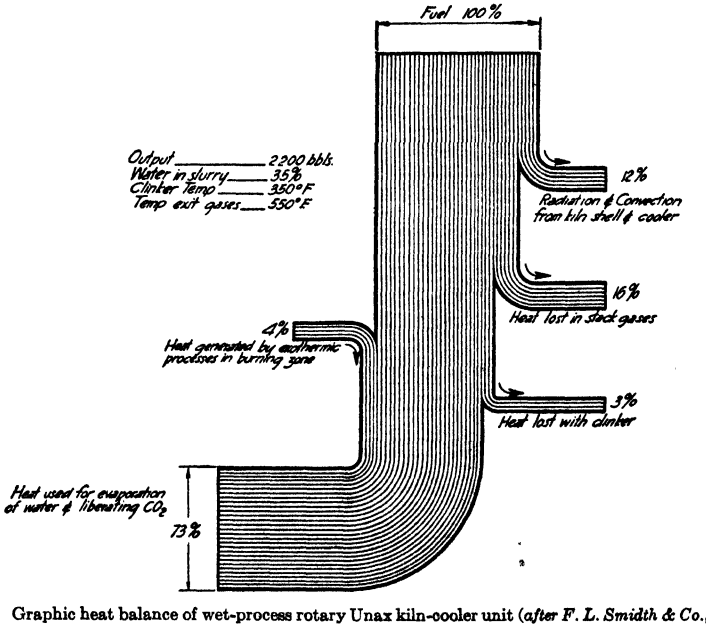

FIG. 8A. Graphic heat balance of wet-process rotary Unax kiln-cooler unit (*after F. L. Smidth & Co., PC*).

Capacity of a kiln is an intricate time-temperature-efficiency integral which is also dependent upon the size of the feed and the effectiveness of the premixing. Evaporation of free water and preheating of the dried solid to the calcination temperature of the limestone are limited in rate only by the supply of available heat and the efficiency of heat transfer, but both the calcination and the reactions to form the cement compounds are solid reactions diffusion-controlled; therefore although the surface reaction rates increase exponentially with increase in temperature, continuance of the reaction by diffusion is by

no means proportionately accelerated. The practical means of acceleration are: (1) decreasing particle size to increase the surface available for immediate reaction and to lessen necessary diffusion distances, and (2) increasing the extent of fusion whereby the increased mobilities of reactants and reaction products characteristic of solution reactions are obtained.

Apart from fineness of feed and thorough preliminary mixing, the expedients employed to increase capacity are: (1) filtration of feed, or provision of chains in the drying zone; (2) insulation of the preheating zone; (3) increase in diameter through the zone of calcination and insulation thereof; (4) control of flame in the clinkering zone and as rapid turnover of charge as is possible to effect maximum utilization of radiant heat.

It follows from the preceding discussion that the kiln must provide certain minimum times for the four principal operations or reactions; that the temperature conditions and necessary times for each are different; and that capacity of a kiln is a matter of the quantity of material that can be subjected effectively to such operations at one time. Time in the kiln is a matter of length of path and speed of pulp travel. Length of path is determined by length and diameter of kiln; speed is a function of pitch, r.p.m. and diameter. Volume that can be presented effectively to the heating means depends upon diameter of kiln, rate of turnover of charge, and the ratio of surface of the traveling stream to its volume. Maximum capacity is attained when the stream volume is the maximum that can be treated effectively in the minimum reaction time imposed by the size of feed particles.

Large modern kilns have capacities as high as 4,500 bbl. per 24 hr., as against 200 bbl. per day for the 6×60-ft. kiln of the early 1900's.

Size of kiln may be estimated as follows: For preheating, calcining, and clinkering allow 3.5 sq. ft. of inside surface per daily barrel of cement for easy-burning mixes; allow 4 sq. ft. for mixes of high lime factor or coarsely ground. These figures are for short kilns (about 125-ft.) with high (1,400° F.) exit-gas temperatures. In such kilns the preheat zone is 20 to 30 ft. long, the calcination zone 60 to 80 ft., and the clinkering zone 30 to 40 ft. For wet kilns add a minimum of 30 to 50 ft. for drying. Burning zone is made shorter when air quenching is practiced, since such kilns are fired to the nose to discharge clinker at full heat. When exit gas temperatures of 400 to 450° F. are desired, the evaporating and preheat zones are lengthened materially. In a recent Puerto Rican kiln 75 ft. was allowed for drying, 110 ft. for preheat, 62 ft. for calcining, and 48 ft. for clinkering. Average diameter of kilns built 1932 to 1942 was 10.4 ft.; average length, 330 ft.

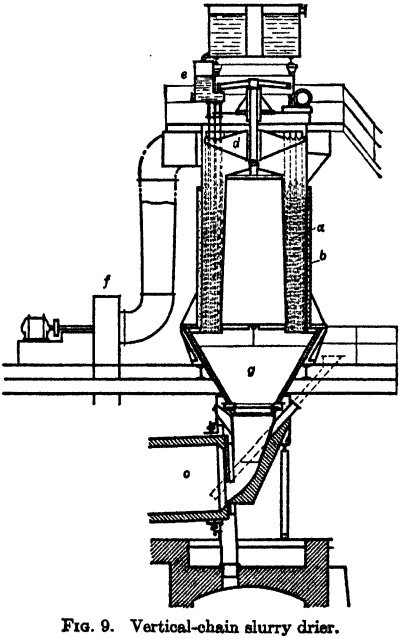

FIG. 9. Vertical-chain slurry drier.

Predrying of wet feed is practiced at some plants. It permits the use of shorter kilns; it increases the capacity of a short kiln; it makes the flue gas available for steam generation; and, with a well-designed drier, evaporates water more economically than can be done in a kiln.

Filtration (Sec. 16) removes enough water to permit the use of flue gas for waste-heat steam generation. The filter is usually placed on the feed floor, with cake falling directly to the kiln feeder.

Polysius vertical-chain drier (Fig. 9) comprises a network of chains *a* hung in a cylindrical annulus in an insulated tower *b* located above the feed end of the kiln *c*. The chain support *d* is arranged to rotate slowly. Slurry from a supply tank *e* is sprayed onto the chains over a part of the annulus through pipes depending from the feed tank. Gas is drawn from the kiln upward through the annular space and chain mass by a fan *f*. The wet slurry on the chains is slowly revolved out of the spray into a drying zone where water evaporates both through the direct heat from the hot gases and by heat transferred from the chains heated in their preceding pass through the later part of the drying zone. As the material dries sufficiently to fall off the chains it is balled up by the chain action and finally falls clear into hopper *g* and thence into the kiln. Gas as hot as 1,400° F. can be handled. Exit gas is usually between 130 and 300° F. The partly dried slurry contains from 5 to 13% moisture (*PQH*).

Misg calcinator comprises a gratelike slowly revolving cylinder about 13 ft. in diameter by 10 ft. long, set horizontally in a housing so conformed as to force rising gas to pass through the grate openings (about 3 in. between grate-bar faces). The cylinder is about half filled with lengths of pipe lying with long axes parallel to the drum axis. Slurry is fed in at the top. Kiln gas enters at the bottom and is drawn through by a fan. The partly dried slurry discharges in the form of nodules containing about 10% moisture and falls into the kiln. Temperature of exit gas is claimed to be about 200° F. (*PQH*).

Preheating of dry mix has not been practiced to any considerable extent in the United States, probably because of the extensive use of waste-heat boilers. Thus in recent modernization of the PENNSYLVANIA-DIXIE plant at Nazareth, Pa. (*35 # 1 PQ 53*), instead of preheating, waste-heat boilers were installed which provide sufficient power to run the entire plant with an over-all fuel consumption of about 1,050,000 B.t.u. per bbl. New insulated kilns with modern grate coolers (Fuller) and unit mills to dry and pulverize coal were installed.

Grudex system (Fig. 10) is used at COPLAY CEMENT MANUFACTURING Co., Coplay, Pa. It comprises a countercurrent coil consisting of 1,200 ft. of 4-in. chrome-nickel steel tubing *a* arranged in circular coils in a vertical flue *b*, receiving waste gas from the kiln *c*. Raw mix from bin *d* passes through a weigh-gate *e*, feeder *f*, surge hopper *g*, roll feeder *h*, and Fuller-Kinyon dry pump *i*, through the coil and thence to the kiln at a temperature of about 1,400° F. Power consumption is claimed to be about 0.7 hp-hr. per bbl. of cement (*U. S. Pats. 1,801,467; 1,961,311*).

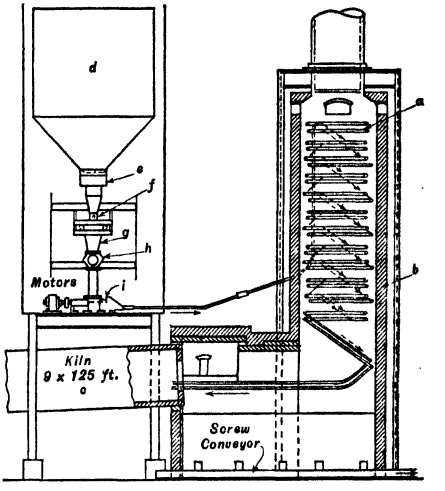

FIG. 10. Grudex system of preheating dry mix.

Lepol system (Fig. 11), used largely in Europe, is designed to supply preheated dry mix to the kiln in nodular form. The raw mix from bin *1* discharges into elevator *3* and thence through surge bin *4* into a revolving drum *5*, in which the material is sprayed lightly with water and delivered as small nodules through a feed hopper *6* onto an endless traveling grate in the enclosure *7*. Exit gas from the kiln *8* at 1,600 to 1,800° F. is drawn down through the grate by fan *10* and discharged through stack *11* at 250° F. Dust collects in hoppers *12* and is returned via screw *13* to elevator *3*. Stack *14*, with an umbrella lock, is used for starting only. Coal-dust firing from bin *16* is illustrated,

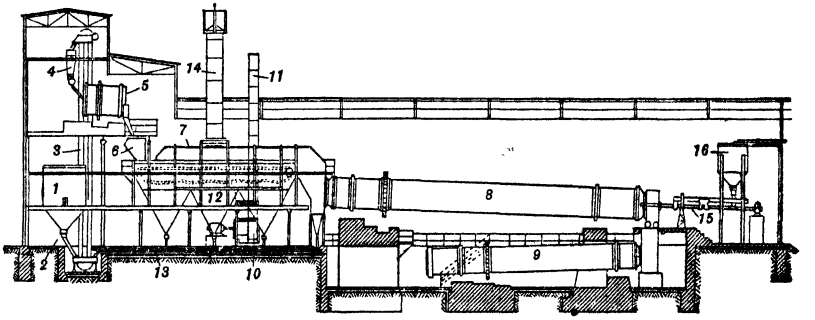

FIG. 11. Lepol arrangement for preheating feed.

but fluid fuels may be employed. The pellets, partly calcined and containing from 8 to 12% moisture, fall into the kiln from the end of the grate. Fuel consumption as low as 682,400 B.t.u. per bbl. of cement is claimed (*PQH*).

Cooling

Clinker is cooled primarily to permit storage and facilitate handling, but controlled machine cooling, including an initial air quench, has secondary results that are equal or more important. Thus much of the heat in the clinker is retained and returned to the kiln, the clinker is embrittled and rendered easy to grind, and the physical nature of the cement

compounds is so affected as to decrease grain size and improve the autoclave test. Cooling is almost invariably done with air, which is inert to the clinker and is the cheapest supply. Two methods are employed, *viz.*, rapid cooling (AIR QUENCHING) or slow gradual cooling.

Coolers may be classified into three principal types: (*a*) slow; (*b*) recuperator; (*c*) air-quenching.

Rotary cooler is slow, and therefore recovers a considerable part of the heat from the clinker. Feed is ordinarily direct from the kiln. Size is determined by the type of the kiln it is working with, and the quantity of clinker to be cooled. Design and construction follow those of the kiln, using tires and rollers for support, with ring gear and pinion drive. The upper end of the cooler is lined with suitable firebrick to protect the shell against excessive heat, and lifters are used to facilitate air contact with the clinker.

Size of cooler for a capacity of about 2,200 bbl. per day is estimated by F. L. Smidth & Co. (*PC*) at 12×120-ft.

Recuperator coolers. UNAX (F. L. Smidth & Co.), in general use, is shown in Fig. 7. It comprises a plurality of small cylinders *p* attached to the kiln shell and arranged to discharge at the top of their revolution into a hopper *x* delivering by chute *y* to clinker conveyor *z*. Tubes *p* may be arranged in single or double rows. The average-size kiln has 10 @ 4-ft.-10-in.(diam.)×20-ft. units in a single ring. Each unit has a chain heat-transfer system with about 2,400 ft. of $^3/_8$-in. chains. Secondary air is delivered at 900° F., and clinker is discharged at 400° F. Draft from the kiln draws atmospheric air through the cylinders.

Vanderwerp cooler (Manitowoc Engineering Works) is attached to and is an integral part of the kiln. It preheats combustion air and cools the clinker by blowing the air through louvred liner plates (see Sec. 17, Fig. 10). Air may be controlled to eliminate excess combustion air. Clinker is discharged at a temperature of about 700 to 800° F., and must be after-cooled if cold clinker is desired.

Air quenching coolers are of grate type (Fuller Company) and pan type (Allis-Chalmers). The method used to air quench is to supply air in sufficient volume to cool the clinker rapidly in its liquid phase, in order to convert some of the compounds into a glasslike structure. This type of cooler is also an excellent heat recuperator.

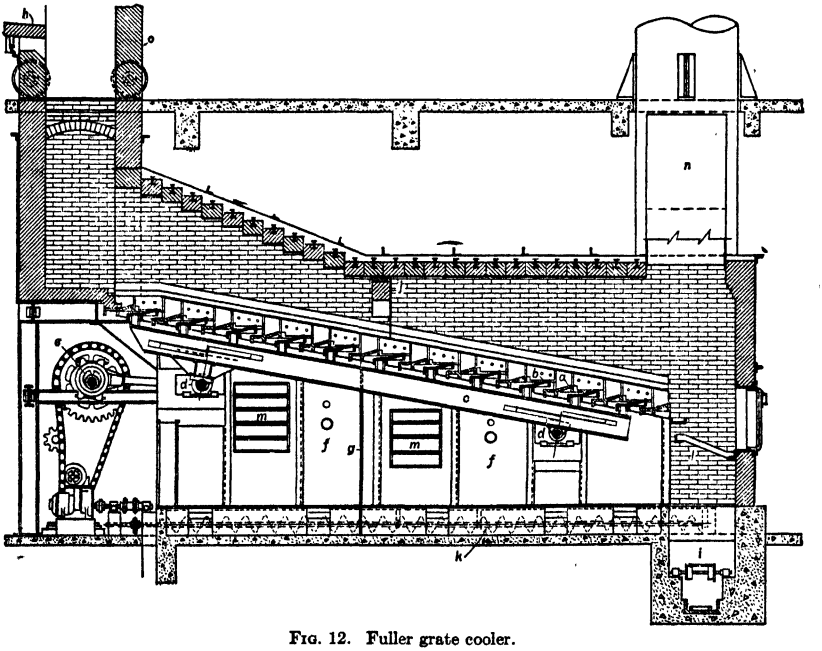

FIG. 12. Fuller grate cooler.

Grate cooler (Fig. 12) consists of an inclined (−10°) movable stepped grate mounted as a perforate diaphragm across a large air duct in such a way that air passes upward through the grate and a bed of clinker travels down it, cooling the clinker and being itself heated.

In the form shown, the perforated grate bars *a* (hatched) are fixed, and the movable bars *b* (black) are mounted on structural-steel frame *c*, carried on wheels *d*, and oscillated by chain-driven eccentric *e*. This assembly forms the roof of sheet-steel-walled plenum chamber *f*, divided by partition *g*. The space above the grate comprises a bricked-in flue and clinker passage, connecting at the upper end with kiln *h*, through hood *o*, and at the lower end with a conveyor *i* for cooled clinker. This flue is likewise partitioned at *j*. Clinker travels down the grate by the push-feeder action (Sec. 18, Art. 22) of the moving grates, which alternately push material off the stationary grates onto themselves (forward stroke), and are themselves unloaded by the push of the stationary grates (back stroke). Screw conveyor *k* removes spill, as necessary. Grizzly *l* is set to hold back occasional large lumps only.

Air enters from a centrifugal blower in streams regulable by inlet dampers *m*. More air is required for cooling than is necessary in the kiln; hence the cooler air, comprising the excess, is discharged through stack *n*. The cold air passing through the hot clinker at the upper end quenches it at a rate depending upon the depth of the clinker bed and the volume of air flowing through this portion of the grate; these may be controlled automatically.

Typical data follow: Cooling 2,000 bbl. per day from 2,500° F. to 150° F.; kiln fuel, 1,900,000 B.t.u. per bbl., grate area, 6 × 20 ft.; air, 26,000 cu. ft. per min. at 6 1/2 in. H_2O under the grates and 9 in. H_2O at the fan; fine clinker in 4- to 5-in. bed in cooler 10 to 15 min.; air to kiln, 1,200° F., 264,000 B.t.u. per min. or 190,000 B.t.u. per bbl.; air to stack, 275° F.

Pan cooler consists of a grate, forming the bottom of a trough which is hung horizontally in a wind box, and is reciprocated between 250 and 300@ 3/4-in. s.p.m. on a Ferraris suspension (Sec. 11, Art. 16) suitably spring-balanced. Depth of bed is controlled by automatic variation in speed of the driving motor with back pressure on the air. DIMENSIONS vary according to the service, *e.g.*, a 5×10-ft. machine to air quench only, supplemented by rotary cooler to reduce clinker temperature to an extent suitable for feed to the grinding mills; and a 4 1/2×55-ft. machine for both quenching and final cooling. The latter machine, loaded, requires a large and heavy drive and is probably close to the size limit for this type of machine.

Action in a quenching cooler. Embrittlement of clinker is effected by cooling at such a rate that the fused part solidifies to form a brittle glass. This has the effect of rendering the glassy material itself easier to grind and also weakens the bond between the grains nonfused in the kiln. Air quenching also changes certain qualities of the cement. The special types (A.S.T.M. Types 2, 4, and 5, and the equivalent Federal types) were designed to lower autoclave expansion, decrease heat of hydration, and increase resistance to aggressive waters by increasing total lime silicates and reducing MgO, and alumina and iron compounds (C_3A and C_4AF). Air quenching helps to accomplish the desired ends by physical rather than chemical means, and is particularly useful when the undesired compounds tend to form in excess. The C_3A and C_4AF are in liquid phase at the clinkering temperature (2,600 and 2,800° F.). When the clinker is cooled quickly, a large portion of these compounds is converted into an amorphous glasslike structure, in which form the undesirable properties of the compounds largely disappear. If, therefore, the specifications intended to cover heat of hydration and sulphate resistance are satisfied by means of physical tests rather than chemical, greater latitude in processing and blending is possible.

Cost of kiln operation is usually the largest cost item in cement manufacture. The principal cost elements are fuel, labor, and maintenance. Despite a trebling of fuel prices and quadrupling of wages since 1914, and a radical increase in prices for maintenance material and supplies, the direct manufacturing cost of cement in well-run plants, until very recently, has been kept down to a remarkable degree, while the quality of cement has greatly improved. The factors in this paradox are: (1) a decrease in fuel consumption from about 1,850,000 to 1,000,000 B.t.u. per bbl. for wet kilns; and from 1,350,000 to 1,050,000 B.t.u. for dry kilns, at the same time providing sufficient recovered heat to manufacture power enough to run the entire plant. (2) A radical reduction in man-hours per barrel to offset the increase in wage rates; this was done by the use of large burning and grinding units and various labor-saving machinery. (3) Increase in knowledge of the chemistry and physics of heat treatment. (4) Development of automatic, *i.e.*, instrument, control.

Fuel consumption was improved by recovery of heat from clinker, and by performing the drying and preheating operations outside the kiln or, by insulating these sections of the kilns and by use of chains, improving heat absorption. Better firing has been effected by automatic temperature controls. Normal consumption ranges from 80 to 100 lb. of 13,500 B.t.u. per bbl. or an equivalent heat value in oil or gas.

Labor per bbl. of cement has been reduced primarily through the use of large units; the saving in burning has, however, been increased, so far as coal-burning units are concerned, by substitution of unit (*i.e.*, individual) coal-grinding mills delivering their product dried and aerated directly to the kiln. Automatic-control devices also find their principal application in the burning department.

Man-hours for the entire clinker department (burning, cooling, and storing) for plants, either wet or dry, producing from 1,000,000 to 1,500,000 bbl. or more per yr., should not average over 0.04 per bbl.

Several large wet plants, and several modern plants using large kilns under instrument control, can produce a barrel of clinker at a consumption of about 0.025 man-hour.

Instruments found in a modern plant are: automatic controllers on draft, fuel feed, and cooler speed; recording pyrometers on burning zone, which may be linked to controllers on kiln speed and kiln-feed rate; also on secondary air, kiln exit gas, and on air in and out of coal mill; meters on kiln draft, secondary air, coal-mill air; tachometers on kiln and feeder; manometer on pressure under grate of primary cooler; automatic gas analysis.

Cost range (1942) for burning was from 26 to 33¢ per bbl. of clinker. Breakdown is shown in Table 20.

Table 20. Cost of burning to clinker (per bbl. of cement) *a*

Item	Average plant	Large plant
Operating labor	$0.0250	$0.0192
Operating supplies	0.0012	0.0008
Maintenance labor	0.0073	0.0054
Maintenance material	0.0238	0.0135
Power at 6.75 mills per kw-hr	0.0169	.....
Power at 5 mills per kw-hr	.....	0.0090
Coal	0.2545 *b, c*	0.2036 *d, c*
Total	$0.33	$0.25

a Does not include mill overhead, interest, depreciation, taxes, etc.
b 100 lb.
c 13,500 B.t.u. @ $5.70 per long ton.
d 80 lb. or less per bbl. using recuperator coolers.

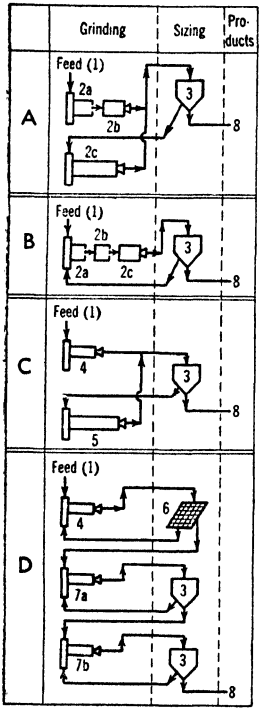

Legend for Fig. 13:

1. Clinker and gypsum by proportioning feeder.
2. 3-compartment mill; *a* = ball compartment; *b* = ball-tube compartment; *c* = tube compartment.
3. Air classifier.
4. Ball mill.
5. Tube mill.
6. Screen.
7. Double-end center-discharge tube mill; *a* = coarse end; *b* = fine end.
8. Stockhouse.

FIG. 13. Typical flowsheets for clinker grinding.

5. GRINDING CLINKER

When clinker is placed in water, hydration of the particles starts immediately with the formation, in place, of a relatively insoluble gel. This gel immediately hinders further access of water to the particle surface, and quickly begins to harden, whereupon access of water to the unchanged core is further hindered, if not substantially wholly prevented. Hence clinker comprising particles of large size range has no utility as cement. Clinker grinding is designed to reduce the largest particles of clinker to a size (probably 30- to 40-μ maximum) at which the largest particles will hydrate completely before access of water is substantially shut off, and at the same time to minimize the proportion of very fine material, which hydrates and sets so rapidly that it takes an initial set before the concrete can be placed. These contradictory requirements are met by closed-circuit dry grinding. Since the size required is too fine for efficient screening, air classification is used.

Two-stage grinding is usual. The majority of recent plants use ball mills, either integral or as separate units, for the primary stage, but many use Hercules or Griffin mills (Sec. 6, Art. 2). Discharge from the primary circuit is normally controlled by a screen when the primary mill is a separate unit. Secondary grinding is almost invariably in tube mills in closed-circuit with air classifiers. Older practice was to make the ball and tube mills integral parts of a compartmented shell, the compartments, with tumbling charges of different sizes, separated by a grate. Many such mills are still in use. Fig. 13 shows typical clinker grinding arrangements. For details of dry ball- and tube-milling see Sec. 6, Art. 3.

Clinker-grinding aids are substances added to the grinding mills that tend to prevent the correlative coating of grinding surfaces and increase in grinding time. Fish-oil stearate, tallow, Vinsol resin, and colloidal carbon have been used with more or less effect. TDA, a proprietary preparation, is most used at the present time. Usual quantities added are less than 1% on the clinker. Beneficial effect appears to be to cause dispersion, as the result of which circulating loads can be greatly increased (*e.g.* from 150% circulating to 400%) with resultant increase in capacity. Decreases in grinding time of 20 to 30% are reported. Any such reagent must, in addition to its effect on grinding, be harmless in subsequent use of the cement. Carbon darkens the cement somewhat. The organic reagents tend to cause increased air entrainment in both the dry cement and the concrete mix. The effect in dry cement is to decrease capacities calculated on the accepted basis of 94 lb. per cu. ft. It is stated (*44 #1 RP 80*)

that clinkers made with such aids tested to usual specifications for soundness; worked better than otherwise; showed less scaling, because of decreased segregation during setting; and initial and final setting times both decreased.

Costs of clinker grinding (departmental only, 1942) to 1,750 sq. cm. per gm. are given in Table 21. For grinding to 1,600 sq. cm. per gm., deduct about 1.5¢ per bbl.; for grinding to 1,900 sq. cm. per gm., add about 2.5¢ per bbl.

Table 21. Cost of grinding clinker *a*

Flowsheet (Fig. 13)	A or B *f*		D *c*	
Item	*b*	*c*	*g*	*h*
Operating labor	$0.0120	$0.0112	$0.0040	$0.0081
Operating supplies	0.0014	0.0010	0.0004	0.0008
Maintenance labor	0.0068	0.0098	0.0027	0.0060
Maintenance material	0.0105	0.0126	0.0039	0.0069
Power	0.0375 *d*	0.0657 *e*	0.0192	0.0514
Total	$0.0682	$0.1003	$0.1034	

a Per bbl. of 376 lb. to a surface area of 1,750 sq. cm. per gm. Includes feeding and conveying to silos, but no overhead.
b Large plant.
c Plant of average size.
d Power at 5 mills per kw-hr.
e Power at 6.75 mills per kw-hr.
f Mills 40 ft. or more in length.
g Ball mill-screen circuit.
h Tube mill-classifier circuit.

6. CEMENT HANDLING

Cement discharges from the clinker-grinding mills at temperatures ranging normally from 200° to 300° F. It retains much of this heat in storage silos for considerable lengths of time. Many users specify maximum temperatures of 125° F. delivered at the job, which usually means that the silo-delivery temperature must not exceed 140° F. Spraying the mill shells with water and water-cooling the mill-silo transport lines is insufficient to meet these specifications in most cases, even when coupled with moderate recirculation in the silos.

Fuller cement cooler (Fig. 14) was devised to eliminate the necessity for make-shift cooling. It comprises (usually) a two-unit combination consisting of an annular cement passage *a*, through which the cement is driven by spiral flights *b* carried on the thin-walled

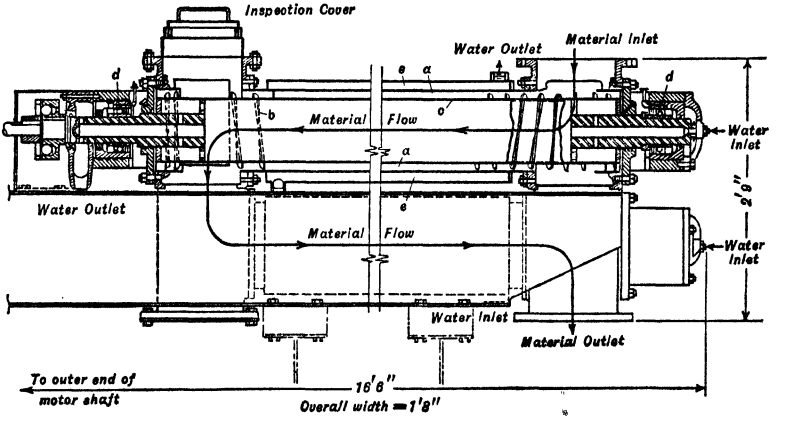

FIG. 14. Fuller cement cooler.

hollow shaft *c*, which is supported in bearings *d*, and is motor driven. Water flows through shaft *c* concurrent with the cement in the first (upper) unit, and then countercurrent through the second (lower) unit. An external cooling jacket *e* is also provided, but cooling therefrom tends to be inefficient owing to the substantially quiescent layer of cement surrounding the outer sweep of the flights. Speed is about 230 r.p.m.; motor, 5 hp. Each unit is rated at 200 cu. ft. of cement per hr.

Performance. At ALLENTOWN PORTLAND CEMENT CO., Evansville plant, with an inlet temperature of 256° F., 50 bbl. of cement per hr., and 25 g.p.m. of water at 52° F., outlet temperature from the

upper unit was 146° F.; when the second unit was added in series, the outlet temperature was 114° F. The motors drew 2.6 hp. each.

Storage is usually in concrete silos 16 to 30 ft. I.D. by 70 to 125 ft., with individual capacities ranging from 2,500 to 40,000 barrels. Such a large percentage of the cement sold must be pre-tested and stored under seal that a large number of separate bins is required; the trend, therefore, is toward bins of moderate size, *e.g.*, 2,500-, 5,000-, and 7,500-bbl. Fig. 15 shows a typical arrangement, consisting of 30 round, reinforced-concrete silos

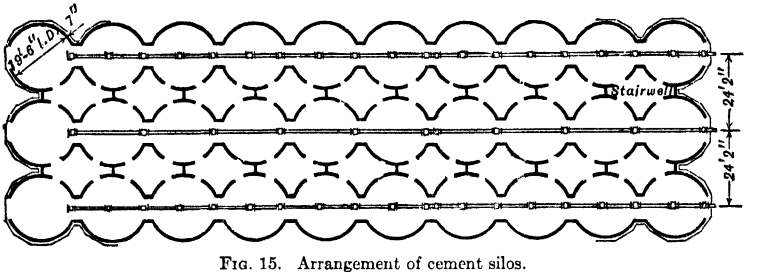

FIG. 15. Arrangement of cement silos.

19 ft. 6 in. I.D. by 70 ft. high, 17 interstice bins, and a stairwell. Capacity of the round bins is about 5,000 bbl. each; of the interstice bins, about 2,500 bbl. each (4 cu. ft. per bbl. of 376 lb.). Total capacity of the entire battery is approximately 235,000 barrels. Each bin has a conical steel bottom, side slope 50°, fitted with 14×24-in. rotary valve at the apex. All bins have flat reinforced-concrete roof slabs, suitably waterproofed.

An access basement is provided under the entire battery. Silos are filled by Fuller-Kinyon pumps (Sec. 18, Art. 11), through transport lines directly from the grinding units. A system of valves operated by remote control switches the mill stream into the desired bin or bins (Fig. 4).

Shipping. When cement is shipped in bulk, it is tapped out of the side of the silos directly into steel hopper-bottom covered cars (Fig. 16). The quantity and flow are controlled by quick-opening valves. Cars can be loaded in about 15 min.; bulk-loading tracks are provided on both sides of a battery of silos. Bulk loading is effected from silos not within gravity reach of cars (or ships) by portable F-K pumps mounted on low trucks and so arranged that the pump receiving hopper clamps to the lower end of the rotary bin-discharge valve.

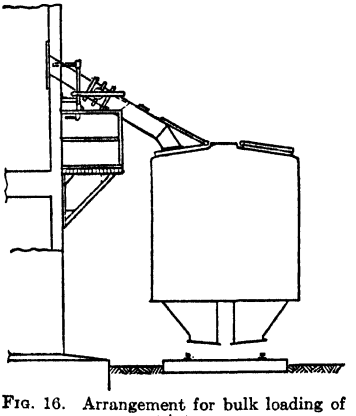

FIG. 16. Arrangement for bulk loading of cement into cars.

One pump, with 10-in. transport line, is usually provided for each row of silos. Pumps for the silo battery shown in Fig. 15 have 600 bbl. per hr. capacity each, when pumping 1,500 ft. Each pump is equipped with a 250-hp. motor, 1,200 r.p.m., and uses 2,000 cu. ft. of air per min. at 30 lb. per sq. in.

The percentage of cement shipped in bulk in 1940 was 25.6%, for 1941 it was 31%, and, considering the large government jobs under construction, for 1942 it may reach 50%. Practically all cement for big government jobs was shipped and handled in bulk.

Water shipment in bulk has developed to the point where special cement tankers are used. Boats carrying as much as 45,000 bbl. have been used on the Pacific Coast for coastwise and transocean shipment. At one plant delivery to the vessel was made by 2 @ 12-in. pump lines in parallel, 3,500 ft. long, extending 2,300 ft. over the water. Loading rate was 2,000 bbl. per hr.

Bulk unloading is done by pumps. Special unloader pumps, mounted on self-propelled trucks with complete remote control, are available for conditions which forbid the use of gravity feed.

At GRAND COULEE DAM two 8-in. Fuller-Kinyon unloaders were used, each driven by a 100-hp. motor, and supplied with air by a Fuller single-stage rotary compressor delivering 750 cu. ft. per min. at 35 lb. pressure. Unloading was done at a maximum rate of 133 cars per 24 hr., pumping a maximum distance of 380 ft. into nine 5,000-bbl. steel storage tanks. Cement was withdrawn from the storage tanks, each

of which contained a cement from one mill. Withdrawal was controlled by vane feeders operating at predetermined speeds, delivering to a common screw conveyor. Blends were thus obtained homogeneous in color, chemical analysis, setting rate, and strength. From the blending silos the material was pumped to a mixing plant 7,600 ft. away by a duplex Fuller Fluxo pump, at the rate of 1,000 bbl. per hr. through 14-in. steel pipe.

Bags are filled by valve packing machines. Fig. 17 shows a typical arrangement. Cement is pumped from silos through pipe *a* into a deaerating tank *b*, whence it flows by gravity over vibrating screen *c*, which removes accidental waste, while undersize passes via screw conveyor *d* to packer-supply bin *e*. Discharge from *d* to *e* ceases when *e* is full; whereupon the excess is conveyed on to overflow bin *f*, discharge of which is controlled by valve *g*. Overfilling of *g* is prevented by an indicating BINDICATOR (level indicator) *h*, which signals the operator at the silo pump. When the level in *e* falls below that necessary to maintain the desired head on the packing machine, Bindicator *i* opens valve *g* and cement flows via conveyor *j* and bucket elevator *k* back to screen *c* and thence by *d* to *e*. Dust from *b*, *c*, *d*, *e*, *j*, *k*, etc., is drawn to dust collector *l*, which discharges collected dust into *f*. Spill from the packing machine and the bag conveyor *m* drop to *j*, as indicated. Bags coming from the packers are conveyed by belt conveyors to the car door, where they are stacked six or eight high on hand trucks to be wheeled into the car. Cars are usually lined with paper to prevent loss of spilled cement and as a protection against splinters and damp floors.

Where auto trucks are loaded, the truck usually backs under the belt from the packing machine and pulls forward as the bags are stacked on the truck and counted.

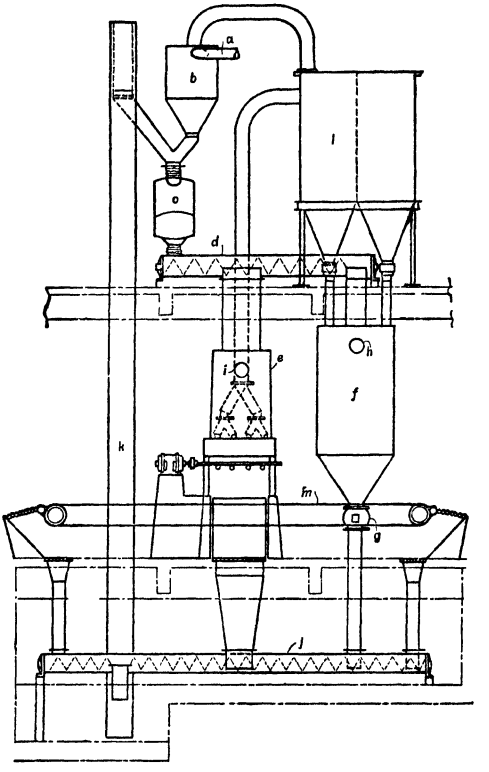

FIG. 17. Arrangement for bag packing.

Packer comprises the hopper (*e*, Fig. 17) and the bag-loading mechanism. Four housings depend from *e*, each of which encloses a feeding element consisting of a head carrying four blades clamped to a common horizontal drive shaft, driven at a constant speed of 800 to 1,150 r.p.m., depending upon the production requirements and the physical characteristics of the material. The front portion of each housing is fitted with a cap containing a discharge opening through which the cement is projected by the blades. Adjacent to each housing, but not touching it, is a filling tube carried by a frame supported on a scale beam. The operator places the valved bag on the filling tube. Cement is forced into the bag until the set weight is reached, when the automatic scale, coming into balance, allows the frame and filling tube to descend, which automatically cuts off the flow of material into the bag. As the filled bag discharges from the machine, the valve is closed by the pressure of the filling. A 4-tube machine is operated by one man and is capable of filling 1,200 or more 94-lb. bags of cement per hr.

Paper bags are supplied as single- or multiple-wall, with one or more plies of waterproof paper, if desired. They are either pasted or sewed. They are shipped to make one trip and are not returnable. In 1940, 42.5% of all cement shipped was packed in paper, 39.6% in 1941, and estimates for 1942 are about 35%.

Cloth bags are usually manufactured from 7-oz. Osnaburg, cut 30×36-in., and are tied automatically with twisted wire ties before being filled from the bottom. Cloth bags usually make from 5 to 10 trips

and are returnable at 10¢ each when in good condition. In 1940 31.9% of all cement shipped was packed in cloth, 29.4% for 1941; the estimate for 1942 is as low as 15% owing to scarcity and the high price of new bags.

Official weight of a barrel of cement is 376 lb. of cement (*ASTM C-150-41*); there are 4 @ 94-lb. bags per barrel.

Charge for packing. It is customary to add 40¢ per bbl. to the bulk price for cement, if shipped in cotton bags; 15¢ if shipped in paper. Bulk shipments are allowed 5¢ a barrel below bulk price, which is about what it would cost to pack in bags and load.

7. FLOWSHEETS

The elements of all cement-plant flowsheets are: (*a*) crushing, (*b*) rock storage, (*c*) raw grinding, (*d*) correction of composition, (*e*) burning, (*f*) clinker grinding, (*g*) storage and shipment. For details see the preceding sections. Flowsheets differ in two principal particulars, *viz.*, whether the raw grinding is done wet or dry; and whether correction is effected by addition of deficient oxides or by rejection of oxides present in excess. The latter method is done by wet classification and/or flotation and is therefore coupled with wet grinding. On the other hand, correction by addition may be employed with either wet or dry grinding, but if the amount of correction necessary is great, either because of large departures of the composition of raw rock from desired kiln-feed composition or because a considerable variety of cements is to be made, wet slurry is preferable from the standpoint of blending. Relative economies in grinding wet or dry are debated, but they are not debatable from the grinding standpoint alone; uncertainty enters on the question of the debit to be assessed against wet grinding for evaporation in the kiln. Examples of typical plants of different types follow.

Universal Atlas Cement Co., Hudson plant. Fig. 18 (*Q* by C. D. Rugen, Operating Engineer).

Location: Hudson, N. Y.

Rock: Shale and high- and low-lime limestones, susceptible of correction by blending. See Table 22.

Process: Dry.

Power: Quarrying and crushing, 3.5 to 4.0 hp-hr. per short ton; raw grinding, 22 hp-hr. per ton; burning 2.2 hp-hr. per bbl. of cement; clinker grinding (standard product), 11.5 to 12 hp-hr. per bbl.; coal grinding, 31 to 32 hp-hr. per short ton.

Fuel: Powdered coal; consumption, 75 to 85 lb. per bbl. of cement.

Running time: Rock mill, 95 to 96%; kilns, 94 to 95%; clinker grinding, 98%.

Site: Flat.

Buildings: Steel and concrete; asbestos-cement sheet siding and roof.

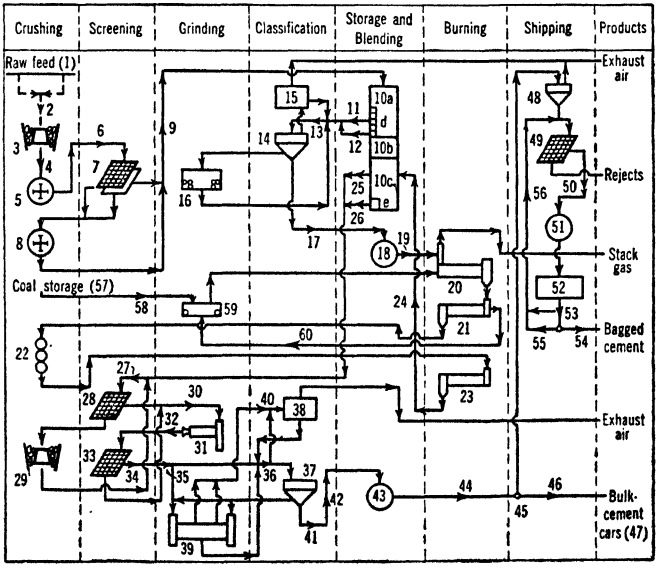

FIG. 18. UNIVERSAL ATLAS CEMENT CO., Hudson plant.

Legend for Fig. 18:

1. Shale and limestones of different grades from different parts of the same quarry. Typical analyses are given in Table 22. Shale and limestone are quarried and run through to storage separately always; more or less segregation is also practiced with the limestones.

2. 2 1/2-cyd. shovels at quarry; average 1/2 mi. quarry to crushing plant; 20-ton side-dump cars, 5 in a train, dumped by air-operated hoist. 2- to 3-ft. maximum lumps.

3. 1 @ 42-in. short-shaft gyratory crusher, 122 gyrations per min., 300-hp. motor; 0.5 to 0.7 hp-hr. per ton.

4. 1 @ 5×24-ft. apron feeder.

5. 1 hammer mill, 16-disk, 58-in. hammer circle; 700-hp. motor. Product, <1 1/2-in. or 3/4-in. 1.6 hp-hr. per ton (yearly average).

6. 1 @ 30-in.×1,200-ft. belt conveyor, 514 f.p.m.; 1 @ 30-in.×98-ft. belt conveyor with Weightometer and 2 horseshoe magnets, 1.5-sq. ft. poles.

7. 1 @ 6×12-ft. 2-deck Ty-rock screen, 1 1/4- or 1-in. Ty-rod cover on upper deck, 1- or 3/4-in. on lower.

8. 1 @ 36×50-in. hammer mill, 125-hp. motor.

9. 1 @ 30-in.×330-ft. belt conveyor with traveling tripper.

10. Flat-bottomed concrete storage bin 30 ft. (deep)×104×555 ft., served by traveling crane with grab bucket. *a*, 104×260-ft. limestone storage, about 33,000 tons live capacity; carried nearly full, particularly in winter; *b*, 104×35-ft. shale storage; *c*, 104×260-ft. clinker storage; *d*, crane-filled mill-feed surge bins; *e*, gypsum storage.

THREE PARALLEL CIRCUITS, EACH AS FOLLOWS:

11. 1 @ 26-in.×23-ft. belt conveyor, 19.2 f.p.m., with Weightometer control of bin gate for feeding limestone at a predetermined rate.

12. 1 @ 22-in.×23-ft. belt conveyor, as (11), and proportioning control, clutch-driven from (11), for shale; clutch is thrown in or out according to whether shale is desired in the raw feed to the grinding mills.

13. 1 vertical carrier-type chain-bucket elevator, 4.75-cu. ft. buckets, 24-in. pitch, 80 f.p.m.; lift 60 ft.

14. 1 @ 16-ft. air classifier, 172 r.p.m., 12-blade fan plus 22 auxiliary blades, 4,000 to 5,000 cu. ft. per min. (70° F. basis) at 450 to 750° F. 110 hp. consumed; screen analyses, % >200-m.: feed, 81; sand, 86; fines, 8 to 9.

15. 1 @ 8 1/2-ft. 200-bag dust collector.

16. 1 @ 3-ring 66-in. ball-ring mill. Feed: ±1% >1-in., @ 23% >1/2-in. Power consumed, 14.3 hp-hr. per ton of new feed to mill; 20.2 hp-hr. per ton for grinding circuit. 1,000 to 2,500% circulating load (calculated from screen tests).

STREAMS COMBINE

17. 1 @ 18-in.×65-ft. screw conveyor; 1 @ 10-in. Fuller-Kinyon pump, lift @ 90 ft., horizontal run @ 350 ft.

18. 6 @ 30 (diam.)×62 ft. blend-storage bins; 2 @ 25×62-ft. compressed-air mixing bins for the three grinding circuits.

19. 18-in. screw-conveyors; 2 @ 10-in. Fuller-Kinyon pumps; 2 @ 27 (diam.)×45-ft. steel bins; screw conveyor; elevator; surge bin; screw feeder.

CLINKERING

20. 3 @ 12×233-ft. rotary kilns; 6-in. standard fire-clay brick lining; slope 5/16 i.p.f.; adjustable speed, ±77 r.p.h.; maximum temperature of clinker at end of burning zone, 2,700° F.; exit gases, 1,600 to 1,700° F.

21. 3 @ 10×78-ft. rotary coolers, 45 r.p.h.; slope, 1 1/4 i.p.f.

22. 3 @ 12×36-in. 3-roll crushers.

23. 3 @ 6 1/2×80-ft. rotary coolers; 90 r.p.h.; slope, 7/8 i.p.f.; clinker temperature at discharge @ 160° F.

24. 3 @ 8×16-in. Salem-type bucket by 45-ft. vertical chain-bucket elevators; clinker scales; 1 @ 16-in.×90-ft. belt conveyor, 285 f.p.m.; 1 @ 24-in.×87-ft. belt conveyor, 285 f.p.m.; 1 @ 16-in. ×99-ft. belt conveyor, 295 f.p.m.; 1 @ 24-in.×60-ft. belt conveyor, 295 f.p.m.; 1 @ 16-in.×216-ft. belt conveyor, 287 f.p.m.; 1 @ 24-in.×224-ft. belt conveyor, 287 f.p.m.

CLINKER GRINDING

25. 1 regulating feeder as (11).

26. 1 regulating feeder as (11).

27. 1 vertical chain-bucket elevator, 88 f.p.m., 62-ft. lift. Bucket size: 20×12×17 5/8-in., 1.9-cu. ft.

28. 1 @ 4-ft.×8-ft. Hum-mer screen, 3/8-in. aperture.

29. 1 @ 10-in. Newhouse crusher, 1/2-in. set.

30. 1 @ 24-in.×38-ft. belt conveyor, 218 f.p.m.; 1 @ 35-ton surge bin; 1 @ 8 1/2-ft. 168-bag dust collector.

31. 1 @ 10 1/2×12-ft. ball mill; 117,000 lb. @ 2-in. (renewal-size) balls; 18 r.p.m.; 700-hp. motor; liners, plate-type (steel), 2 in. thick when new.

32. 1 vertical chain-bucket elevator, 92 f.p.m., 55-ft. lift; bucket size, 30×12×17 5/8-in., 2.79-cu. ft.

33. 1 @ 4×8-ft. Hum-mer screen, 20-m.

34. 1 @ 18-in.×86-ft. screw conveyor, 62 r.p.m.

THREE PARALLEL OR SERIES CIRCUITS, EACH AS FOLLOWS:

35. 1 @ 40-ton surge bin; 1 constant-volume feeder; 1 splitter.

36. Split stream to one of two items (37): 1 @ 12-in.×20-ft. screw conveyor, 61 r.p.m.; 1 @ 62-ft. (lift) vertical chain-bucket elevator, 88 f.p.m.; bucket size, 20×12×17 5/8-in., 1.9-cu. ft.

37. 2 @ 16-ft. air classifiers in parallel.

38. 1 @ 8 1/2-ft. 216-bag suction-type dust collector; takes suction on elevator (36) and mill (39).

39. 1 @ 8×30-ft. 2-end feed, center-discharge tube mill, 160,000-lb. charge of 7/8-in. (steel) balls; 19.9 r.p.m., 700-hp. motor.

40. Suction lines.

41. 1 @ 18-in.×67-ft. screw conveyor, 62 r.p.m.

STREAMS COMBINE

42. 1 @ 8-in. Fuller-Kinyon pump, 110-ft. lift, 750- to 850-ft. run.

43. 12 @ 26 (diam.)×60-ft., 12 @ 26×100-ft., 10 @ 26×90-ft. cement-storage bins, all with interstice bins, with Fuller-Kinyon transfer system.

44. 1 @ 8-in. traveling F-K pump.

45. Valve.

46. 1 @ 120-bbl. surge bin.

47. Loaded on track scale.

Legend for Fig. 18—Continued:

SEVERAL PACKING UNITS AS FOLLOWS:

48. Air releaser.

49. 1 @ 4×5-ft. vibrating screen, 0.147-in. aperture.

50. 1 @ 120-bbl. surge bin; 1 rotary type feeder; 1 @ 12-in.×24-ft. screw conveyor with excess release to (56).

51. 1 @ 10-bbl. packing hopper.

52. 1 @ 4-valve Modern valve-type packing machine.

53. 1 @ 26 1/2-in.×21-ft. wire-mesh conveyor, 115 f.p.m.

54. Bags.

55. Dust.

56. 1 @ 16×8-in. Salem-type bucket, 50-ft. lift elevator, 275 f.p.m.

COAL HANDLING

57. Western Pennsylvania bituminous slack.

58. 1 @ 24-in.×300-ft. belt conveyor, 400 f.p.m.; 1 @ 24-in.×265-ft. belt conveyor, 400 f.p.m.; 1 @ 24-in.×110-ft. belt conveyor, 405 f.p.m.; 1 @ 24-in.×203-ft. belt conveyor, 166 f.p.m., with magnetic head pulley and Merrick Weightometer; 1 @ 20-in.×75-ft. screw conveyor; 1 @ 11 (diam.)×19-ft. surge bin.

59. 3 @ 1-stage, 44-in. ball-ring unit coal pulverizers in parallel; product 18% >200-m. Power consumption, 16 hp-hr. per ton.

60. 3 @ 40-in. blast fans. Air temperature, 300° F.

Table 22. Typical analyses of shale and limestone at Hudson plant

Stone	Percentages				Ratios	
	SiO_2	Al_2O_3	Fe_2O_3	$CaCO_3$	A/F	S/R
Shale	63.7	15.9	5.6	4.7	2.84	2.96
Port Ewan limestone	16.9	2.7	1.5	76.6	1.80	4.02
Becraft limestone	6.1	1.9	2.3	87.3	0.83	1.45
New Scotland limestone	50.2	7.6	4.0	34.0	1.90	4.32

Summary: Three-stage open-circuit crushing in gyratory and hammer mills from <42-in. to <3/4-in. One-stage dry raw grinding to 8% >200-m. in ball-bearing mill in closed-circuit with an air classifier. Clinker crushed to <3/8-in. in gyratory, and ground in two stages, the first a ball mill in closed-circuit with a screen, the second a tube mill in closed-circuit with an air classifier.

Compañia Argentina de Cemento Portland. Fig. 19 (*Q* compiled by R. C. Ried).

Location: Parana, Argentina, S. A.

Rock: A mixture of shell limestone, clay, and marl too low in lime and high in silica for cement manufacture without adjustment. Silica grains are coarse. See Table 23.

Capacity: 1,100 t.p.d. raw rock.

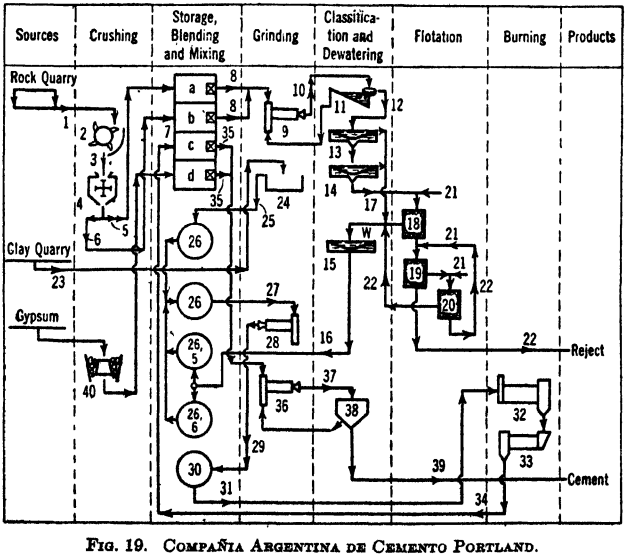

FIG. 19. COMPAÑIA ARGENTINA DE CEMENTO PORTLAND.

Legend for Fig. 19:

1. Overburden removed by #616 Bucyrus-Monighan walking electric dragline, 5-cyd. bucket, 200-ft. boom, 300-hp. motor; Diesel crawler-type tractor; 15-ton crawler-type wagon. Stone loaded by #85-B Bucyrus-Erie crawler-type electric dragline, 2 1/2-cyd. bucket, 85-ft. boom, 150-hp. motor; 2 @ 26-ton oil-fired steam locomotives; 6 air-operated 10-cyd. steel dump cars and 10 @ 10-cyd. steel side-dump cars; 1 electric-driven car dump with solenoid brake.

2. 1 @ 36×60-in. single-roll crusher, 4-in. set, 40 r.p.m., 200-hp. slip-ring motor and V-belt drive; 200 t.p.h. capacity.

3. 1 @ 48-in. pan conveyor, 10-hp. squirrel-cage motor with speed reducer.

4. 1 @ 50×50-in. hammer mill, 700 r.p.m., 1-in. grate aperture, 250-hp. slip-ring motor direct-connected; capacity, 200 t.p.h.

5. Low-lime rock. See Table 23.

6. High-lime rock. See Table 23.

7. 1 @ 75×225-ft. reinforced-concrete storage bin; capacity: stone, 14,000 tons; gypsum, 4,000 tons; clinker, 38,000 bbl.; 7 1/2-ton traveling crane, 75-ft. span, 3-cyd. clamshell bucket with 50-hp. motor; crane travel, 350 f.p.m., 30-hp. motor; crane trolley, 200 f.p.m., 7 1/2-hp. motor; hoist, 150 f.p.m., 50-hp. motor. *a*, low-lime rock; *b*, high-lime rock; *c*, clinker; *d*, gypsum.

8. 2 @ 60-ton reinforced-concrete bins; 2 @ 6 1/2-ft. table feeders (see Challenge feeders, Sec. 18) with 7 1/2-hp. motors with speed reducers.

9. 1 @ 9×11 1/2-ft. ball mill, 18.4 r.p.m., 65,000 lb. @ 3 1/2-in. balls, 450-hp. synchronous motor with speed reducer. See Table 23.

10. 1 @ 39×78-in. center-discharge bucket elevator, 15-hp. motor.

11. 1 @ 20(diam.)×16×33-ft. bowl-rake classifier, 1 to 3 r.p.m., 12 s.p.m.; 5- and 10-hp. motors. See Table 23.

12. 1 @ 5-in. 850-g.p.m. centrifugal pump, 50-hp. motor; 2 @ 23(diam.)×23-ft. reinforced-concrete tanks with Turbomixers, 20-hp. motors; 1 @ 5-in. 1,000-g.p.m. centrifugal pump; 1 @ 5 (diam.)×5-ft. steel surge tank with Turbomixer, 2-hp. motor.

13. 1 @ 45-ft. (diam.)×18-in. reinforced-concrete Hydroseparator, 0.75 r.p.m., 5-hp. motor. See Table 23.

14. 1 as (13). See Table 23.

15. 1 @ 180(diam.)×8-ft. Torq-type thickener, 0.044 r.p.m., 3-hp. motor; underflow, 62% solids; return of overflow to mill circuit reduces consumption of flotation reagent. See Table 23.

16. 1 @ 4-in. 200-g.p.m. centrifugal pump, 40-hp. motor.

17. 1 @ 10(diam.)×15-ft. reinforced-concrete surge tank with Turbomixer, 7 1/2-hp. motor; 1 @ 4-in. 800-g.p.m. centrifugal pump, 15-hp. motor; 1 @ 5(diam.)×5-ft. steel tank with Turbomixer, 2-hp. motor.

18. 4 @ 56-in. Fagergren cells in series. See Table 23.

19. 4 as (18). See Table 23.

20. 2 as (18). See Table 23.

21. Partly saponified AC 708 (Talloel) added by individual bucket-type feeders to each cell. Degree of saponification varied to change relative frothing and collecting properties as desired. Froth is watery and breaks down with water sprays in thickener.

22. 4 @ 4-in., 300- to 500-g.p.m. centrifugal pumps, 7 1/2- to 15-hp. motors, on streams in flotation house.

23. Loaded by dragline; transport as for rock (1).

24. Wash mill, 11 r.p.m., 30-hp. motor, 15 t.p.h.

25. 1 @ 4-in. 400-g.p.m. centrifugal pump, 25-hp. motor.

26. 6 @ 23(diam.)×23-ft. reinforced-concrete blending tanks with mechanical agitation (2 @ 20-hp. motors) and air agitation (1 rotary compressor, 254 cu. ft. per min. @ 50-lb. pressure, 50-hp. motor); 1 @ 6-in. 900-g.p.m. centrifugal pump, 60-hp. motor.

27. 1 @ 28×60-in. center-discharge bucket elevator, 10-hp. motor.

28. 1 @ 7×26-ft. tube mill, 19.4 r.p.m.; 450-hp. synchronous motor.

29. 1 as (27).

30. 2 @ 56(diam.)×25-ft. reinforced-concrete storage tanks, with radial and central agitators, 20- and 7 1/2-hp. motors respectively; 1 @ 6-in. 900-g.p.m. centrifugal pump, 60-hp. motor.

31. 1 @ 69×28-in. center-discharge elevator, 10-hp. motor; 1 bucket-type slurry feeder, 1-hp. motor.

32. 1 @ 11- and 10×400-ft. rotary kiln with chain section; 140-hp. motor; draft fan, 100-hp. motor; reinforced-concrete stack, 9(diam.)× 110 ft.; 0.445 to 0.9 r.p.m., 4% slope, 42% moisture in feed, oil fuel, 1,100,000 B.t.u. per bbl. of clinker.

33. 1 @ 9×120-ft. rotary cooler, 75-hp. motor; 2.9 r.p.m., slope, 3%; steel lifters.

34. 1 @ 16-in.×124-ft. shaking conveyor, 15-hp. motor; 1 @ 49×26-in. center-discharge bucket elevator.

35. Constant-weight feeders.

36. 1 @ 8×40-ft. tube mill, 18.8 r.p.m.; compartment 1, 42,000 lb. @ 2- to 3 1/2-in. balls; compartment 2, 32,000 lb. @ 1 1/4- to 2-in. balls; compartment 3, 43,000 lb. @ 3/4- and 7/8-in.; compartment 4, 42,000 lb. @ 1/2- to 3/4-in.; 1,050-hp. synchronous motor.

37. 1 @ 69×32-in. center-discharge bucket elevator, 20-hp. motor.

38. 1 air separator, 35-hp. motor; fan, 125-hp. motor; dust filter, 2-hp. motor; filter fan, 10-hp. motor.

39. Cement pump; rotary air compressor, 60 cu. ft. per min., 60-lb. pressure, 125-hp. motor; 8 reinforced-concrete silos, 124,000-bbl. capacity; 2 @ 7-in. 400-bbl.-per hr. portable cement pumps with 100-hp. motors and 2 @ 722-cu. ft. per min. (40-lb.) rotary compressors with 100-hp. synchronous motors; 4 @ 4-spout automatic bag packers, 25-hp. motors; 2 @ 30-in. reversible belt conveyors; 1 @ 42-in. inclined belt conveyor; 1 @ 42-in.×140-ft. belt conveyor (15-hp. motor).

40. Gyratory crusher.

Summary. Two-stage crushing from run-of-quarry to <3/4-in.; two-stage wet grinding with intervening rejection of coarse silica by classification and lime flotation. Rotary cooling. One-stage closed-circuit clinker grinding.

Table 23. Quantities and analyses for Parana plant

Ref. No. *a*	Material	Tons per 24 hr.	Solids, %	Size		Analyses, %								$\frac{SiO_2}{R_2O_3}$ *f*
				% <100-m.	% <325-m.	SiO_2	Fe_2O_3	Al_2O_3	$CaCO_3$	CaO	$MgCO_3$	MgO	Loss	
	Quarry materials													
23	Clay overburden					68.1		20.2	2.7					3.31
23	Soft marl					66.3		17.7	5.2		1.7			3.74
1	Hard marl					19.5		4.2	71.9		4.3			4.68
1	Limestone					9.7		0.8	89.3		2.6			11.52
	Grinding and classification													
9	Feed to ball mill	1,100	72.0 *c*	2.0 *b*					62.1					
11	Classifier: Sands	2,200	76.0	13.7										
11	Overflow	1,100	19.0	87.0	67.6	28.7	2.6	4.0	59.5 *d*	33.4		1.2	29.7	4.36
13	Hydroseparator # 1: Overflow	386	9.2	100.0	100.0	24.0	3.0	5.9	59.5	33.3		1.8	31.5	2.70
13	Underflow	714	40.6	86.0										
14	Hydroseparator # 2: Overflow	103	4.2	100.0		24.6	2.8	6.0	58.1	32.5		2.0	31.2	2.82
14	Underflow	611	45.0	85.3		30.9	2.4	2.9	59.8	33.5		0.9	28.7	5.85
	Flotation													
18	Feed	611	29.0	85.3	45.3	30.9	2.4	2.9	59.8	33.5		0.9	28.7	5.85
18	Primary concentrate	224	20.0			3.4	0.6	0.3	96.2	53.9		0.3	41.2	3.91
19	Scavenger: Feed	387	22.0						40.8					
19	Concentrate	325 *e*	21.0						75.4					
19	Reject	239	11.0	70.5	40.5	75.7	3.9	5.9	9.2	5.2		1.0	9.4	7.7
20	Cleaner: Concentrate	148	20.0			3.0	0.8	0.3	96.2	53.9		0.6	41.0	2.8
20	Tailing	177	9.5						16.8					
18, 20	Combined concentrate	372	20.0	93.0	57.3	3.4	0.6	0.3	96.2	53.9		0.3	41.0	3.8
15	Thickener feed *g*	861	8.9	95.0	79.2	15.2	2.0	3.5	77.4			0.4		2.76

a Numbers refer to items of Fig. 19.
b 95% <3/4-in.; discharge 33.7% <100-m.
c Discharge.
d Sample taken at different times from corresponding analysis of item (9).
e Includes 177 tons circulating cleaner tailing.
f $R_2O_3 = Al_2O_3 + Fe_2O_3$.
g Combined Hydroseparator overflows (13, 14) and flotation concentrates (18, 20).

Universal Atlas Cement Company, Northampton plant. Fig. 20 (*Q* by C. D. Rugen, Operating Engineer).

Location: Northampton, Pa.
Crude: See Table 24.

Table 24. Estimated quantities, pulp densities, and analyses for 100 lb. raw mix, based on laboratory tests by Separations Process Corp.

Flowsheet reference No.	Item	Weight, lb.	Solids, %	Percentages							
				SiO_2	Al_2O_3	Fe_2O_3	$CaCO_3$	$MgCO_3$	K_2O	Na_2O	S/R
20	Raw rock	105.2	64	14.1	5.5	1.7	73.2	4.6	0.88	0.37	1.96
22	Centrifuge feed	64.5	64	14.1	5.5	1.7	73.2	4.6	0.88	0.37	1.96
22	Centrifuge cake	32.0	77	12.7	4.1	1.6	76.6	4.4	0.59	0.34	2.23
22	Centrifuge effluent *a*	32.5	27	15.7	6.9	1.7	69.5	4.8	1.17	0.41	1.82
24	Carbon float	1.2	.....	17.7	9.4	5.9	51.1	5.2	1.64	0.31	1.16
27, 28	Tailing	6.7	.....	51.6	21.4	2.9	10.2	9.2	3.69	1.17	2.12
25	Combined tailing *b*	7.9	10	46.5	19.6	3.4	16.3	8.6	3.38	1.04	2.02
26, 28	Lime concentrate	24.6	60 *c*	5.5	2.8	1.1	86.6	3.6	0.44	0.13	1.41
36	Cake + concentrate	56.6	68	9.6	3.5	1.4	81.0	4.1	0.52	0.25	1.96
35	Sand	2.7	66	97.1	1.2	0.8	0.8	0.0	0.10	0.05	48.5
20	Raw rock	40.7	64	14.1	5.5	1.7	73.2	4.6	0.88	0.37	1.96
38	Raw mix	100.0	66	13.6	4.3	1.5	75.7	4.2	0.66	0.29	2.35

a Flotation feed. *b* Combined rejects. *c* After thickening; thickener feed, 13% solids.

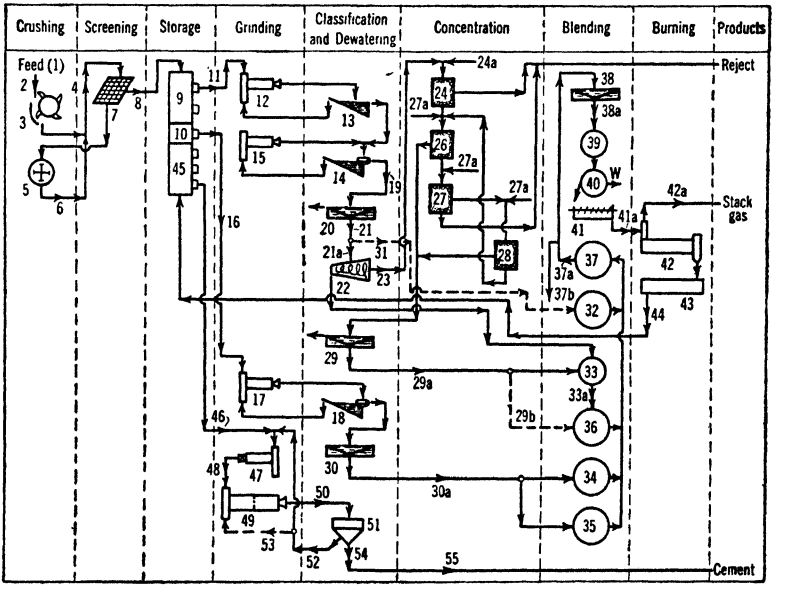

Legend for Fig. 20:

1. For analysis see Table 24.

2. Quarry, 2 1/2-cyd. shovels, max. size loaded about 3- to 4-ft. lumps. Average distance quarry to crusher, 1/2 mi.; haulage by 20-ton side dump cars, 8 cars per train. (From a lower quarry level gasoline tractors with 10 cyd. semi-trailers will be used, assisted up a 750-ft. 10% ramp by electric hoist (*7 # 5 MT, TP 1619*).) Feeder: 60-in.× 18 1/3-ft., apron-type.

3. 1 @ 36×60-in. Fairmount single-roll crusher, 6-in. set, 48 r.p.m., 250-hp. motor; capacity, 400 t.p.h.

4. 1 @ 36-in.×300-ft. inclined (+18°) belt conveyor to screen; 475 f.p.m.

5. 1 @ 15-disk hammer mill, 48-in. hammer circle, 720 r.p.m., 600-hp. motor, grates set for 3/4-in. product; capacity, 425 t.p.h.

6. 1 @ 30-in.×111-ft. inclined belt conveyor, 450 f.p.m.

7. 2 @ 5×12-ft. Ty-rock screens in parallel, 3/4- to 1 1/4-in. aperture, according to moisture content.

8. 1 @ 30-in.×500-ft. inclined belt conveyor, 27-ft. lift; 1 @ 30-in.×300-ft. distributing conveyor with traveling tripper.

FIG. 20. UNIVERSAL ATLAS CEMENT CO., Northampton wet-process plant.

Legend for Fig. 20—Continued:

9. Cement-rock storage (see Fig. 21).
10. Sand and iron storages (see Fig. 21).

TWO PARALLEL ROCK CIRCUITS EACH AS FOLLOWS:

11. 1 feed hopper crane-filled from (9); 1 @ 24-in. Feedoweight.
12. 1 @ 9 1/2×8 2/3-ft. ball mill, 19 r.p.m.; 60,000 lbs. @ 2-, 2 1/2-, and 3-in. forged-steel balls; Lorain-type rolled-steel liners, 2 1/2 in. thick; 350-hp. direct-connected motor, 180 r.p.m.
13. 1 @ 8×25 1/2-ft. heavy-duty duplex rake classifier; slope, 2 1/2 in. per ft.; 25 s.p.m.
14. 1 @ 27(diam.)×16×40 1/2-ft. quadruplex bowl-rake classifier; slope, 2 in. per ft.; rake speed, 10 to 12 s.p.m.; bowl rake, 1/2 to 11/2 r.p.m. variable; overflow, 13 to 15% solids.
15. 1 @ 9 1/2×8 2/3-ft. ball mill, 18 1/2 r.p.m.; 60,000 lbs. @ 7/8-, 1-, and 1 1/4-in. forged-steel balls; Lorain-type rolled-steel liners, 2 1/2 in. thick; 350-hp. direct-connected motor, 180 r.p.m.

SAND AND IRON CIRCUIT

16. 1 @ 24-in. Feedoweight.
17. 1 @ 8×7 2/3-ft. ball mill, 20 r.p.m.; 35,000 lb. @ 1 1/4-, 1 1/2-, 2-, and 2 1/2-in. forged-steel balls; Lorain-type rolled-steel liners, 2 1/2 in. thick; 200-hp. direct-connected motor, 180 r.p.m.
18. 1 @ 10(diam.)×6×31 1/2-ft. duplex bowl-rake classifier; slope, 2 in. per ft.; rake speed, 12 to 15 s.p.m.; bowl rakes, 0.8 to 2.4 r.p.m. variable.

TWO RAW-ROCK LINES COMBINE

19. 1 @ 10-in. centrifugal pump.
20. 1 @ 200×10-ft. traction-type thickener, 60 m.p.r.; overflow returns to raw mill. See Table 24.
21. 1 (of 2) 5-in. centrifugal pump.
21a. 1 Turbomixer, 61,500-gal. capacity (24 (diam.)×20-ft.); 1 @ 6-in. centrifugal pump; 1 constant-level surge tank (overflow return to Turbomixer).
22. 2 @ 54×70-in. centrifugal classifiers in parallel; 125-hp. motors with magnetic clutch, permitting variation in centrifugal speed from 350 to 600 r.p.m. See Table 24.
23. 1 @ 61,500-gal. Turbomixer; 1 @ 8-in. centrifugal pump; 1 constant-level surge tank (overflow return to Turbomixer).
24. 4 @ 3-cell 60-in. square-type Fagergren flotation machines in parallel to skim out carbon-bearing overflow; feed, 17% solids, 16 to 20 t.p.h. See Table 24.
24a. Reagents: light-gravity fuel oil (medium-furnace and DuPont B-23 frother.
25. Reject settling basin and 6-in. centrifugal pump to return water overflow to Turbomixers. See Table 24.
26. 4 @ 5-cell 66-in. square-type Fagergren flotation machines in parallel (rougher cells). See Table 24.
27. 4 @ 6-cell 66-in. square-type Fagergren flotation machines in parallel (scavenger cells). See Table 24.
27a. Goulac added to first cell to disperse remaining carbonaceous material. Low-titre oleic acid and saponified modified tall oil (AC S-196) stage-added, the oleic to each cell in items (26) and (27) and the first three cells of (28), the S-196 to each cell in items (26) and (27). B-23 is stage-added to the first few cells of (26) only.
28. 4 @ 4-cell 66-in. square-type Fagergren flotation machines in parallel (cleaner cells). See Table 24.
29. 1 @ 200-ft. traction-type thickener, 60 m.p.r.; overflow to Turbomixers.
29a. 1 (of 2) 4-in. centrifugal pump.
29b. Alternative line.
30. 2 @ 50-ft. thickeners in parallel, one for sand and one for iron; items (16), (17), (18) are used alternatively for one or the other feed.
30a. 1 @ 4-in. centrifugal pump.
31. Alternative line for feeding raw rock direct to blend tanks.
32. 1 (any of 6) @ 30(diam.)×22-ft. blending tanks for cement rock.
33. 1 mixing tank.
33a. 1 @ 6-in. centrifugal pump.
34. 1 as (32) for iron.
35. 1 as (32) for sand. See Table 24.
36. 1 (any of 6) as (32) for cake and/or concentrate. See Table 24.
37. 1 (any of 6) as (32) for blended mix.
37a. Double sump and 3 @ 8-in. centrifugal pumps.
37b. Alternative recirculating lines to any of the 6 blending tanks (37).
38. 2 @ 80-ft. storage tanks in parallel, 4,000 short tons capacity each. See Table 24.
38a. 4 @ 5-in. centrifugal pumps.

FOUR PARALLEL CLINKERING UNITS EACH AS FOLLOWS:

39. 2 @ 24(diam.)×20-ft. kiln-feed tanks in parallel; 1 @ 3-in. centrifugal pump.
40. 2 @ 9-disk 8-ft.10-in. filters, water overflow to Turbomixers; cake, 23% moisture.
41. 1 @ 16 1/2-ft. pug mill.
41a. 1 reciprocating-pump filter-cake feeder.
42. 1 rotary kiln (3 @ 10 1/2×250-ft., 1 @ 9×248-ft.); 125-hp. motors; powdered coal.
42a. 1 (of 3) waste-heat boiler; rating, 28,000 lb steam per hr.
43. 1 clinker cooler (3 @ 4 1/2×40-ft. vibrating, 1 inclined-grate, all air-quench type, sending secondary air to kiln).
44. 1 @ 20-in.×25-ft. vertical continuous-bucket elevator; 1 @ 24-in.×8-ft. belt conveyor with Weightometer.
45. Clinker storage, see Fig. 21.

THREE PARALLEL CLINKER-GRINDING UNITS EACH AS FOLLOWS:

46. 1 @ 24-in.×12-ft. double Feedoweight conveyor for clinker and gypsum; 1 @ 20-in.×27-ft. vertical continuous-bucket elevator, 240 f.p.m.
47. 1 @ 9 1/2×8 2/3-ft. ball mill, 19 r.p.m.; charge, 60,000 lb. @ 1 1/4- to 3-in. graded forged-steel balls; liner, Lorain-type, rolled-steel, 2 1/2-in. thick; motor, 400-hp., 180 r.p.m.
48. 1 @ 16-in.×34-ft. vertical continuous-bucket elevator, 293 f.p.m.
49. 1 @ 8×30-ft. 2-compartment tube mill, 20.5 r.p.m.; charge: compartment 1: 80,000 lb. @ 1 1/4- to 7/8-in. graded forged-steel balls; compartment 2: 80,000 lb. @ 3/4-in. forged-steel balls; liners, Lorain-type, rolled-steel, 1 1/2 in. thick; segmental-steel discharge grate, 2 in. thick, 3/8-in. slotted apertures; motor, 800-hp., 180 r.p.m.
50. 1 @ 16-in.×12-ft. spiral conveyor, 60 r.p.m.; 1 @ 30-in.×70-ft. lift continuous-bucket elevator, 102 f.p.m.; proportioning splitter gate; 2 @ 16-in.×12-ft. spiral conveyors.

Legend for Fig. 20—Continued:

51. 2 @ 16-ft. air separators in parallel.
52. 1 @ 16-in.×72-ft. spiral conveyor, 60 r.p.m.
53. Alternative spout.
54. 2 @ 16-in.×12-ft. spiral conveyors.
55. 1 @ 18-in.×12-ft. spiral conveyor; 1 @ 8-in. Fuller-Kinyon pump to storage, packing and loading. See Fig. 21.

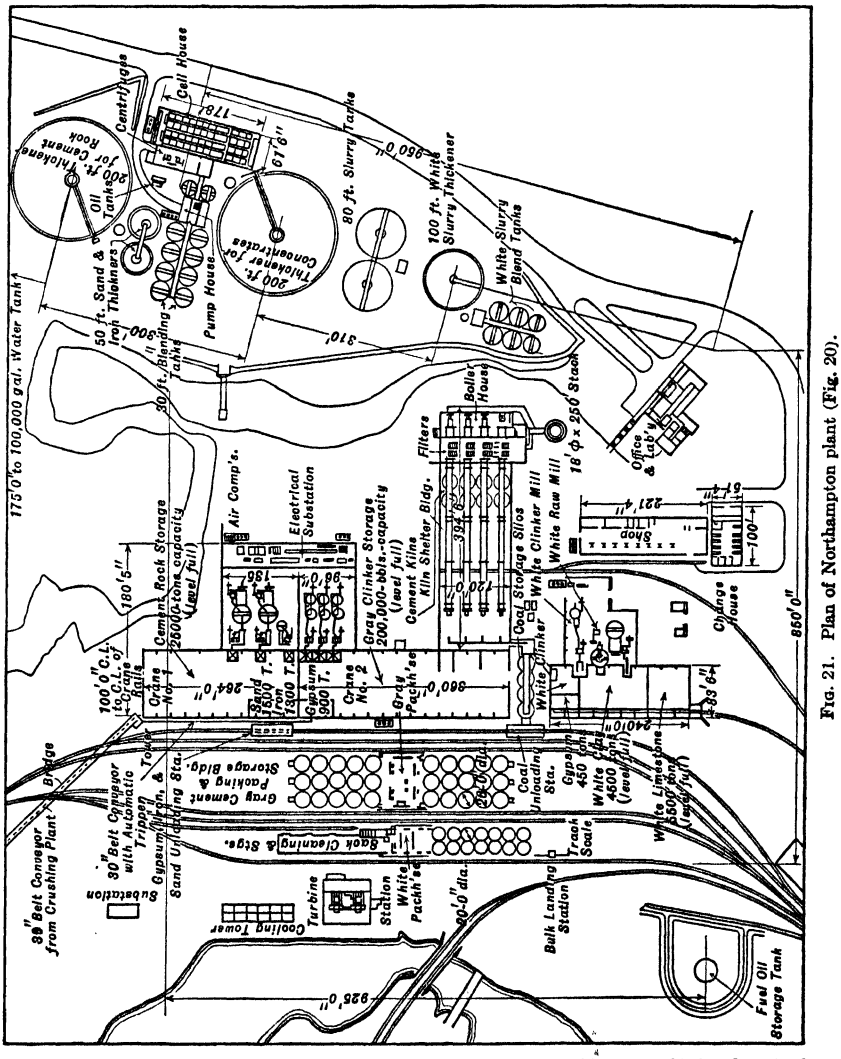

FIG. 21. Plan of Northampton plant (Fig. 20).

Summary. Two-stage crushing from run-of-quarry to <1 1/4-in. or 3/4-in. by single-roll and hammer mill, with circuit closed on the second stage; two-stage wet ball-mill grinding to 96% <200-m., both circuits closed, the first by a rake, the second by a bowl-rake classifier. About 40% of ground raw rock taken directly to raw mix (for standard cement); about half of the remainder taken out by centrifuge; and not subjected to further treatment prior to blending; remainder, comprising about 30% by weight of raw rock, with a desired size of 100% <30-μ, is floated to produce a high-lime (86 to 87%) concentrate (see Table 25). Blending is effected at about 65% solids, and the blended product filtered to 21% moisture and pugged before burning. Clinker is ground in two stages, the first a substantially open-circuit ball mill, the second a tube mill with circuit closed by air classifier.

Permanente Corporation. Fig. 22 (*148 A 374; 43 # 12 RP 36; 33 # 6 PQ 27*).

Location: Near San Jose, Calif.

Rock: $CaCO_3$, average 85%; SiO_2, variable and high in certain sections of quarry. See Tables 25 and 26.

Table 25. Run-of-quarry rock at Permanente

Size, in.	Weight, %	Analyses, %					
		SiO_2	Al_2O_3	Fe	CaO	MgO	Ignition loss
6	12.5	1.6	0.7	0.3	54.1	0.4	42.7
5	4.8	4.3	0.6	0.3	52.7	0.2	41.8
4	8.4	3.2	0.4	0.2	53.5	0.1	42.4
3	11.6	2.9	0.5	0.3	53.3	0.5	42.5
2 1/2	10.2	3.8	0.9	0.2	53.2	0.2	42.2
2	8.0	5.6	0.8	0.3	51.8	0.2	41.4
1 1/2	8.9	5.3	0.9	0.3	52.5	0.2	41.3
1/2	18.7	8.2	0.9	0.4	50.5	0.3	40.2
<1/2	16.9	24.1	3.6	1.4	38.9	0.5	31.9

Capacity (Feb. 1941): 12,000 bbl. per day; 3,130 t.p.d. of raw limestone, 620 t.p.d. clay, about 100 t.p.d. gypsum.

Products: Cements: Low-heat, normal, moderate-heat, moderate sulphate-resistant, high-early-strength, oil-well, modified oil-well, plastic. Shasta Dam specification cement, as follows, was the kind being made at the time of the tests tabulated herein: Ignition loss, 2.25%; insol., 0.75%; SO_3, 2.25%; MgO, 5%; uncombined CaO, 1.25%; Fe_2O_3/Al_2O_3, 1.5; C_3S, 35% max.; C_2S, between 40 and 65%; C_3A, 7% max.; C_4AF, 20% max. Average specific surface on bin sampling, 1,800 sq. cm. per gm.; no individual sample less than 1,600 sq. cm. per gm. 7-day strength, 750 lb. per sq. in.; 28-day, 2,000 lb. Sugar rock, 600 tons per 8 hr. Lime, 100 t.p.d., from breakage of sugar rock. Crushed stone from sugar rock or cement rock, 200 t.p.h. capacity.

Table 26. Clays at Permanente

Item	No. 1	No. 2	No. 3	No. 4
SiO_2.....	47.2	66.2	46.7	46.2
Fe_2O_3...	13.8	5.4	11.8	11.2
Al_2O_3....	16.1	15.1	16.2	12.9
CaO.....	6.4	1.7	7.6	8.1
MgO....	4.5	1.7	6.8	9.2
Loss.....	10.3	5.1	9.2	10.9

Power consumption: Milling: Quarrying, conveying, crushing, and delivery to grinding bins, 2.6 kw-hr.; primary grinding, 5.3 kw-hr.; secondary grinding, 6.2; thickening, flotation (3.2), and blending, 8.8; clay preparation, 28.3; slurry handling, 5.0 kw-hr., all per ton of dry solid handled in the operation; distributed, this amounts to 8.4 kw-hr. per bbl. of clinker.

Labor consumption: Milling: Quarry to bins, 20 tons per man-hour; bins to kilns, 14.8 tons per man-hour.

Distances: 2 1/2 mi. from plant to S.P.R.R. branch line by spur track.

Building: Steel and concrete with galvanized-iron covering.

Table 27. Screen and carbonate analyses in limestone grinding at Permanente
(percentages) *a*

Screen	Feed to primary mill		Primary-mill discharge		Primary-classifier sands		Primary-classifier overflow		Bowl-rake sands		Secondary-mill discharge		Bowl overflow	
	Wgt.	$CaCO_3$	Wgt.	$CaCO_3$	Wgt.	$CaCO_3$	Wgt.	$CaCO_3$	Wgt.	$CaCO_3$	Wgt.	$CaCO_3$	Wgt.	$CaCO_3$
3/4-in.	2.7	88.2	.....	.....	.....	.....	.....	.....	.....	.....	.....	.....	.....	.....
1/2	9.0	78.0	.....	.....	3.3	78.0	.....	.....	.....	.....	.....	.....	.....	.....
3/8	16.7	86.2	1.8	42.9	8.9	64.2	.....	.....	.....	.....	.....	.....	.....	.....
3-m.	15.0	83.8	2.2	61.1	4.7	68.0	.....	.....	.....	.....	.....	.....	.....	.....
4	11.4	81.2	2.3	82.0	3.8	72.9	.....	.....	.....	.....	.....	.....	.....	.....
6	8.9	84.8	2.3	77.9	3.6	69.2	.....	.....	.....	.....	.....	.....	.....	.....
8	6.1	84.0	2.8	79.6	4.3	73.5	.....	.....	.....	.....	.....	.....	.....	.....
14	8.4	85.7	9.2	76.4	13.7	73.3	.....	.....	.....	.....	.....	.....	.....	.....
20	2.8	85.2	7.8	77.5	11.4	75.3	0.4	74.4	0.1	.....	.....	.....	.....	.....
28	2.5	86.5	10.8	77.7	14.4	75.4	2.1	76.0	1.1	71.5	0.3	68.4	.....	.....
35	1.7	87.1	10.1	79.3	11.0	77.3	7.0	77.8	6.8	74.0	2.1	71.9	.....	.....
48	1.6	87.1	7.9	80.9	5.6	78.6	9.5	80.0	8.8	76.6	6.2	74.3	.....	.....
65	1.2	88.1	6.6	81.7	3.2	79.7	9.8	81.7	14.9	77.4	13.2	75.8	.....	.....
100	1.1	88.5	5.0	82.5	1.9	79.7	8.5	82.4	17.5	77.3	18.1	75.6	.....	.....
200	2.0	89.5	6.7	84.8	2.1	81.4	13.3	86.0	38.8	78.0	34.7	76.5	6.3	77.2
325	0.7	89.5	2.7	86.9	0.8	84.3	5.9	86.7	4.8	83.9	6.4	82.5	15.7	84.2
<325	8.2	78.1	21.8	86.7	7.3	85.3	43.5	87.0	7.2	86.5	19.0	86.7	78.0	86.0

a 125 t.p.h. to plant.

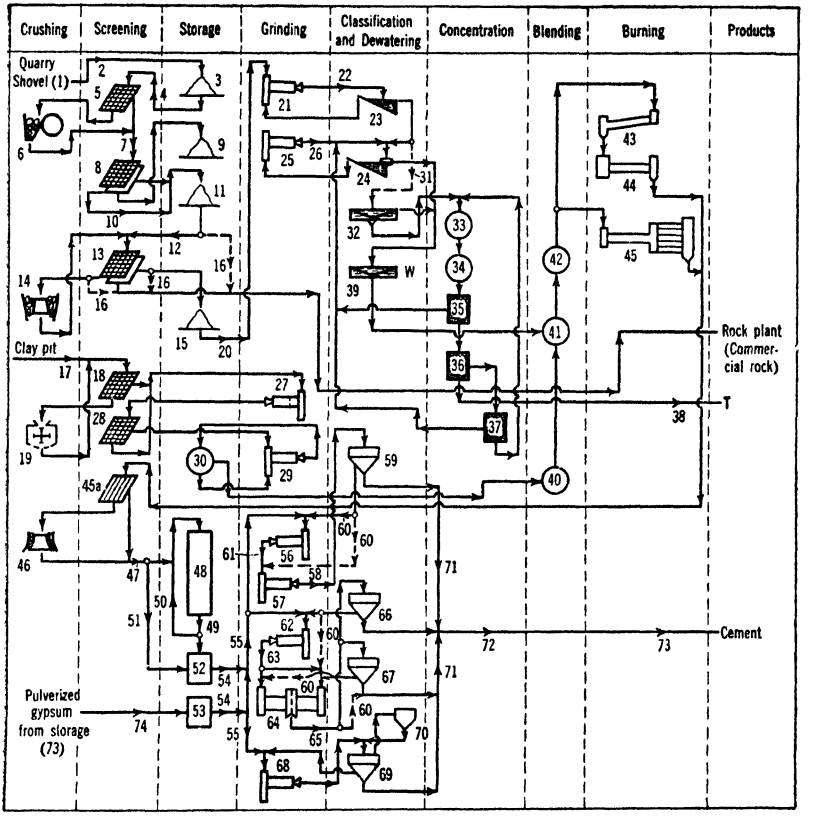

Legend for Fig. 22:

1. 5-cyd. shovel.

2. Hopper; vibrating feeder; 1 @ 36-in.×100-ft. pendulum conveyor (down-hill flow); 1 @ 1,000-ft. (max. extension) conveyor; 1 field conveyor. 30-cyd. Le Tourneau buggies alternative to the conveyors.

3. 1 @ 5,000-ton stockpile.

4. 1 @ 42-in. pan feeder; 1 @ 42-in.×400-ft. belt conveyor with Weightometer.

5. 1 @ 5×10-ft. Ty-rock screen, 6-in. apertures.

6. 1 @ 24×36-in. Farrell-Bacon jaw crusher, 6-in. open setting; 100-hp. motor.

7. 1 @ 36-in.×1,630-ft. belt conveyor, 130-ft. fall; 1 @ 36-in.×2,225-ft. belt conveyor, 232-ft. fall; 1 @ 36-in.×1,300-ft. belt conveyor, 237-ft. fall. Speeds, 500 f.p.m.; 8-ply, 42-oz. belt, 54-in. pulleys. Control of each conveyor is by a 200-hp. synchronous geared regenerative motor; at full load 260 kw. is generated.

8. 1 @ 5×10-ft. 2-deck Ty-rock screen, 6- and 3-in. apertures.

9. 6~3-in. sugar rock (for sugar industry); 100,000-ton stockpile.

10. 1 @ 36-in.×400-ft. boom conveyor; several-hundred-foot drop at discharge.

11. 550,000-ton stockpile.

12. 1 @ 36-in. tunnel conveyor with vibrating feeders.

13. 1 @ 5×10-ft. 2-deck Ty-rock screen and 1 @ 4×10-ft. Seco screen in parallel, 1 1/2- and 3/4- or 1/2-in. apertures.

14. 1 @ No. 49 Kennedy-Van Saun low-head gyratory crusher, 125-hp. motor; and 1 @ 4-ft. short-head cone, 150-hp. motor; in parallel.

15. 5,000-ton stockpile.

16. Alternative routing.

17. "Clay" is sandstone and andesite, tough and resistant to grinding. Trucks; hopper near plant; pan feeder; belt conveyor.

18. 1 @ 4×5-ft. vibrating screen, 3/8-in. aperture.

19. 1 @ No. 3 A-C hammer mill (Pulverator); 50-hp. motor.

20. Vibrating feeders; 1 @ 24-in. belt conveyor in tunnel; 2 @ 400-ton circular hopper-bottomed steel bins; Merrick Feed-O-Weights. Feed tonnage ranges from 90 t.p.h. when grinding to 75% <200-m. to 150 t.p.h. when grinding to 50% <200-m.; and at any given *mog* falls approximately 2% for each 1% reduction in $CaCO_3$ content. See table 27.

21. 1 @ 9 1/2×10-ft. Traylor and 1 @ 9×10 1/2-ft. Smidth ball mills (both inside dimen-

FIG. 22. PERMANENTE CORPORATION.

Legend for Fig. 22—Continued:

sions); 19 r.p.m., 3/4-in. grate apertures; pulp 75 to 80% solids; 500-hp. motors. Original charge, each mill: 39,500 lb. @ 4-in. balls, 31,000 lb. @ 3-in., 6,500 lb. @ 2 1/2-in.; make-up is half-and-half 4-in. and 3-in. Consumption 0.75 lb. per ton. All mills dumped at 4-mo. intervals and recharged on their original ration.

22. 2 @ 8-ft. Dorrco sand wheels, attached to mill-discharge trunnions.

23. 2 @ 12×31 1/2-ft. quadruplex rake classifiers, 26 s.p.m.; overflow, 16 to 30% solids; 30-hp. motor. See Table 27.

24. 2 @ 28(diam.)×16×42-ft. bowl-rake classifiers, with 5-hp. and 25-hp. variable-speed motors; normal speeds, 9 s.p.m. and 1.5 r.p.m. for rakes and bowl respectively for 95 to 96% <200-m. overflow at about 13% solids; sands about 78% solids. See Table 27.

25. 1 @ 9 1/2×10-ft. A-C ball mill, 500-hp. motor, and 1 @ 9 1/2×10-ft. Traylor ball mill, 500-hp. motor, both with 3/8-in. grates, 19 r.p.m., and 77,000-lb. ball charges as follows: 3,000 lb. @ 2-in., 14,000 lb. @ 1 1/2-in., 20,000 lb. each @ 1 1/4-, 1-, and 3/4-in. with make-up at 2 1/2- and 2-in. See (21). Consumption, 0.75 lb. per ton. Capacity of circuit grinding to 96% <200-m. is 150 t.p.d. with feed containing 90% $CaCO_3$ and 2% >48-m. See Table 27.

26. 2 @ 11-ft. Dorrco sand wheels, attached to mill-discharge trunnions.

27. 1 @ 7×26-ft. 2-compartment ball-tube mill, 500-hp. motor; discharge, 52% <200-m. Ball charges: first compartment, 8,000 lb. @ 5-in., 6,000 each @ 4-, 3 1/2- and 2 1/2-in.; second compartment, 16,000 lb. @ 2 1/2-in., 12,000 @ 2-in., 22,000 @ 1 1/2-in.; consumption 2 to 3 times that of limestone mills.

28. 3 @ 4×6-ft. Hum-mer screens, 28-m. aperture.

29. 1 @ 7×26-ft. Smidth ball mill, 500-hp. motor; discharge 55% solids, 71% <200-m. Ball charge: 9,000 lb. @ 2-in., 7,000 @ 1 1/2, 6,000 @ 1-in., 19,000 @ 7/8-in., 39,000 @ 3/4-in.

30. Storage. Pulp accumulated and then recirculated until reduced to 85% <200-m. More than two-thirds of the power consumption in clay grinding is in this secondary circuit.

31. Alternative flow.

32. 2 @ 45-ft. hydro-bowl classifiers; overflow, 5% solids, 97% <325-m., about 20% of dry feed; underflow, 30% solids.

33. 1 @ 23×23-ft. Turbomixer; water added to make outflow 25% solids.

34. Constant-head tank; outflow controlled by Massco-Grigsby rubber pinch valves.

35. 2 @ 3-cell 66-in. Fagergren machines in parallel; @ 100 t.p.h. dry solid. Partly saponified Talloel fed to each cell of (35, 36, 37) at rate (total) of 0.8 lb. per ton; no other reagent used.

36. As (35).

37. 2 @ 2-cell 66-in. Fahrenwald units in parallel. See Table 28.

38. Tailing pond, water reclaimed.

39. 2 @ 150×10-ft. thickeners with pickets; each thickener with 2 @ 4-in. Hydroseal pumps for recirculating (and spreading) thickened slurry. At 7,000 bbl. per day and 65% <200-m. in feed, underflow was 68% solids; at 95% <200-m., it was 66% solids; at 12,000 bbl. per day and 95% <200-m. it was 62% solids at *p*H 8.2; at *p*H 9.5 solids in underflow fall to 58 or 59%, and required area is increased about 30%.

Table 28. Analyses of flotation-plant products at Permanente (percentages)

Item	Hydro-bowl		Flotation		
	Feed	Overflow	Feed	Concentrate	Tailing
SiO_2...	12.0	5.9	15.6	3.2	92.3
Al_2O_3..	1.1	0.8	0.8	0.5	1.8
Fe_2O_3..	1.0	0.3	0.3	0.3	0.4
CaO...	48.0	51.8	47.0	53.9	3.8
MgO...	0.1	0	0.1	0.1	0.1

40. 2 @ 20(diam.)×40-ft. steel storage tanks, each for "clay" of a different composition.

41. 1 of 5 as (40), filled about 3/4, agitated by air. Carbonate content determined and calculated amount of clay added from (40). Agitated at least 30 min. and sampled. Correction to desired composition.

42. 1 of 2 @ 80(diam.)×20-ft. tanks with mixing mechanism similar to thickener arms driven at 0.2 to 0.6 r.p.m. by a 25-hp. 4-speed motor (5 to 15 hp. consumed); 12 air nozzles with porous-plate discharge distributed on arms for air agitation; also recirculation by a 3-in. pump from a center discharge to quarter points on the periphery. Discharge to kiln is from the bottom near the periphery via two outlets through Fuller automatic valves on a common line and thence through a Massco-Grigsby pinch valve to a sump having liquid-level control on the Fuller valves.

43. 1 @ 12×450-ft. Traylor kiln; 72-in. Ferris-wheel feeder. Pendent chains, 8 1/2 ft. long, 130-ft. section. Combustion air drawn through cooler (44) and thence through 2 @ 7-ft. Western Precipitation Co. Polyclones to remove the bulk of clinker dust, which is sent to clinker storage. No. 54 Buffalo fan with 150-hp. motor. Lining, see (45). 200-hp. motor; feeder motor synchronized with drive motor with adjustable speed ratio. Natural gas (1,100 B.t.u.) fuel, with standby oil burner. Kiln-control panels carry recording instruments for temperatures of exit gas and rotary-cooler gas; r.p.h. and total revolutions of kiln; CO and CO_2 in exit gas; voltage and amperage of kiln motors; fuel-gas consumption; indicating draft gage.

44. 1 @ 11 1/2×120-ft. rotary cooler, lined 40 ft. with brick.

45. 2 @ 12×11×12×464-ft. Smidth kilns with 90-ft. draped-chain sections; rated at 3,500 bbl. per day each. 10 @ 5×30-ft. Unax coolers, lined 5 ft. Kilns fed by rotary scoop. Linings all kilns: 200 ft. @ 9-in. magnesite brick, balance high alumina- and firebrick; asbestos block behind all brick. 200-hp. motors; feeder motors synchronized with drive motors on adjustable speed ratios.

45*a*. Grizzlies in chutes feeding crushers.

46. 2 @ 4-ft. Traylor TY reduction gyratories, one a spare; 3/8-in. set; circulating lubricating oil water-cooled.

47. Belt conveyor with movable tripper to and over (48); 2 lateral conveyors from tripper, 18 ft. long.

48. Clinker storage, 100×340-ft., 5-compartment, V-bottom to a conveyor tunnel; 160,000 bbl. capacity.

49. Tunnel conveyor fed by 2 portable Feed O-Weights and one vibrating feeder.

50. Transfer conveyor.

51. By-pass conveyor.

Legend for Fig. 22—Continued:

52. 4 @ 1,350-bbl. clinker feed bins.
53. 2 gypsum bins.
54. 6 Feed-O-Weights.
55. 4 screw conveyors.
56. 1 @ 9 1/2×10-ft. Traylor ball mill, 61,000 lb. <4-in. balls.
57. 1 @ 8×40-ft. 2-compartment ball mill; 1,000-hp. synchronous motor; 63,000 lb. 1- and 7/8-in. steel balls in first compartment; 101,000 lb. <5/8-in. steel balls in second compartment. TDA used as a grinding aid.
58. 1 @ 8-in. Fuller-Kinyon pump.
59. 2 @ 16-ft. Raymond Double-whizzer air classifiers.
60. Alternatives, whole or partial.
61. Elevator.
62. 1 @ 9 1/2×10 1/2-ft. A-C ball mill, 77,000 lb. <4-in. steel balls.
63. As (61).
64. 1 @ 2-ended 8×40-ft. ball mill, separate center discharges; 1,000-hp. synchronous motor; 135,000 lb. Concavex in each compartment, <1 1/4- and <5/8-in. respectively in 1 and 2. TDA used as a grinding aid.
65. 2 bucket elevators.
66. 1 as (59).
67. 1 as (59).
68. 2 @ 8×36-ft. Unidan 3-compartment ball mills, 135,000 lb. <3 1/2-in. balls and Cylpebs each; 1 @ 1,000-hp. synchronous motor each. TDA used as a grinding aid.
69. 2 @ No. 250 Smidth multistage air classifiers, with 40-hp. variable-speed motors.
70. 2 cyclones; 2 fans with 125-hp. motors.
71. Separately or as blended in a screw-conveyor system.
72. 3 Fuller-Kinyon pumps, with manually operated diversion at (73).
73. 27 @ 30×90-ft. silos in 3 rows of 9, with interstice bins; combined capacity, 500,000 bbl. cement (1 silo and 1 interstice bin for gypsum); 3 @ 8-in. portable F-K pumps under bins to pack house, car-loading bin, or for circulation. Truck loading or direct car loading through rotary valves from the outside silos. Bulk car loading, 15 min. per car.
74. 1 of stock-house F-K pumps.

Summary. Two-stage crushing in jaw crusher and closed-circuit reduction gyratory to <1/2- to 3/4-in. Two-stage wet grinding in ball and tube mills (both circuits closed) to 94% <200-m. Correction of kiln feed by flotation.

Valley Forge Cement Co. Fig. 23. (Data compiled by R. C. Ried, Asst. Supt.).

Location: West Conshohocken, Pa.
Capacity: 1,330 t.p.d.
Rock: See item 9, Table 29.
Fuel: 98 lb. of 13,800-B.t.u. coal per bbl.
Power: 28.9 hp-hr. per bbl.

Legend for Fig. 23:

1. Inclined hoist from quarry in 10-ton side-dump cars; thence in trains of 4 quarry cars 1,800 ft. by 10-ton Vulcan locomotive, standard gage; 1 @ 5×11 3/4-ft. traveling-bar grizzly with push-button control.
2. 1 @ 48×60-in. Traylor jaw crusher, 6-in. set, 150-hp. motor.
3. Undersize of grizzly feeder.
4. 1 @ 36-in.×28-ft. pan conveyor.
5. 1 @ #9 Williams hammer mill, 24 (hammer circle)×32-in., 875 r.p.m., 2-in. grate setting, 350-hp. motor direct-connected. Product <3/4-in.
6. 1 @ 24×91-ft. belt conveyor.
7. 1 @ 78×154-ft. reinforced-concrete storage bin, *a* = high-lime; *b* = low-lime, silica, iron; *c* = clinker; *d* = gypsum. 1 @ 8-ton crane, 80-ft. span, 2 1/4-cyd. bucket, 15-hp. trolley motor, 2 @ 50-hp. hoist motors, 1 @ 50-hp. bucket motor.

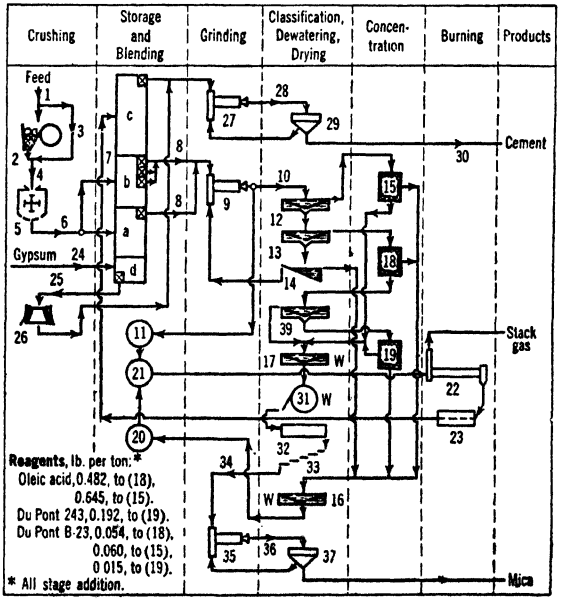

FIG. 23. VALLEY FORGE CEMENT CO.

Legend for Fig. 23—Continued:

8. 6-ft. table feeders, 1 to each bin; drawn alternately or proportionately as desired.

9. 2 @ 7 1/4×42 1/3-ft. 3-compartment wet-grinding tube mills, 20 r.p.m., 700-hp. synchronous motors. Charge: compartment 1, 13 tons @ 2 1/2- to 4-in. forged-steel balls; compartment 2, 12 tons @ 1 1/4- to 1 1/2-in. balls; compartment 3, 27 tons @ 7/8-in. balls. Liner: lifter-type, 3 1/4 in. thick new. Pulp density, 67% solids.

10. 1 of 10 @ 20(ID)×21-ft. steel storage and blend tanks. See Fig. 2. Mechanical (5-hp. motors) and air agitation. Pump; constant-head feeder.

11. 3 tanks as (10) for iron, silica, and for lime rock not needing correction.

12. 1 @ 30-ft. Hydroseparator (see Table 29).

13. 1 @ 10-ft. Hydroseparator (see Table 29).

14. 1 @ 11 2/3×23-ft. rake classifier, 8 s.p.m. (see Table 29).

15. 10 @ 66-in. sq. Fagergren cells (see Table 29).

16. 1 @ 125-ft. traction thickener, 69 m.p.r. (see Table 29).

17. 1 @ 80-ft. thickener, 34 m.p.r. (see Table 29).

18. 12 as (15). See Table 29.

19. 10 @ 36-in. sq. Fagergren cells (see Table 29).

20. 2 as (10) for blending (see Fig. 2).

21. 2 as (10) for storage (see Fig. 2).

22. 2 @ 11 2/3 and 8 3/4×223-ft. kilns, 0.94 m.p.r., 50-hp. d-c. geared motors.

23. 1 @ 4×16-ft. and 1 @ 3 1/2×13 1/2 primary reciprocating-grate coolers in parallel; 2 @ 3×13 1/2-ft. secondary reciprocating-grate coolers in parallel.

24. Railroad cars, pan conveyor, bucket elevator.

25. 1 @ 6-ft. table feeder; 1 @ 3 1/2-ft. table feeder for gypsum.

26. 1 @ 28-in. Traylor reduction gyratory.

27. 2 @ 3-compartment 7 1/3(ID)×42 2/3-ft. tube mills, 20 r.p.m.; charge: 53 tons @ 1/2- to 3 1/2-in. forged-steel balls; liners, lifter-type, 3 1/4 in. thick new; 700-hp. synchronous motors.

28. 2 @ 7-in. Fuller-Kinyon pumps, 50-hp. motors.

29. 2 @ 16-ft. Sturtevant air separators, 75-hp. motors.

30. 2 @ 6-in. Fuller-Kinyon pumps, 60-hp. motors; storage silos; 8-in. carriage-mounted Fuller-Kinyon pump, 125-hp. motor; bulk loading and bag packing.

31. 1 @ 8×10-ft. drum-type filter, 2 1/4 m.p.r.; cake 23% moisture.

32. 1 @ 6 2/3×14-ft. nodulizer; nodules 19% moisture.

33. 1 @ 4×30-ft. reciprocating-grate drier.

34. 1 @ 12-in.×59-ft. screw conveyor, 27.7 r.p.m.

35. 1 @ 5×11-ft. ball mill, 29 r.p.m.; charge: 6,000 lb. @ 2-in. balls.

36. 1 @ 19-in.×38-ft. bucket elevator (6×11-in. buckets), 240 f.p.m.; 1 @ 12-in.×21-ft. screw conveyor, 39 r.p.m.

37. 1 @ 10-ft. air classifier.

39. Hydroseparator.

Table 29. Quantities and assays in flotation plant at Valley Forge Cement Co.

Ref. No.	Item	Tons per day	Percentages			
			Of original feed	Solids	<200	$CaCO_3$
9	Feed	1,334	100.0	23.2	93.3	68.4
12	30-ft. Hydroseparator: Overflow	611	45.9	14.5	97.7	64.5
	Underflow	723	54.1	47.2	87.9	72.7
13	10-ft. Hydroseparator: Overflow	419	31.4	22.0	91.5	72.4
	Underflow	304	22.7	54.0	86.7	72.3
14	Rake classifier: Overflow	128	9.5	9.5	96.0	74.3
	Sands	176	13.2	72.0	61.4	70.6
15	Fine-limestone flotation: Conc	544	40.9	30.0	98.0	71.3
	Tailing	67	5.0	7.0	97.0	10.0
16	125-ft. thickener: Feed	1,012	75.8	15.2	97.3	76.1
	Underflow	1,012	75.8	65.6	97.3	76.1
17	80-ft. thickener: Feed	146	11.0	10.0	94.2	8.1
	Underflow	146	11.0	45.0	94.2	8.1
18	Coarse-lime flotation: Conc	306	22.9	35.0	95.0	91.0
	Tailing	113	8.5	13.0	86.3	9.9
19	Mica flotation: Conc	79	6.0	12.0	91.0	6.5
	Tailing	34	2.5	5.3	71.5	29.9

Summary. Two-stage crushing from run-of-quarry to <3/4-in. in jaw crusher and grate-type hammer mill; one-stage grinding to 93% <200-m. with circuit closed through two-stage Hydroseparation and one-stage rake classification. Correction by separate lime flotation of slime and fine sand fractions of raw feed and subsequent mica rejection from the sand tailing. Mica concentrate dried, ground, and sold. Slurry wet-blended and burned, with grate-cooler quenching.

Gulf Portland Cement Co. Fig. 24 (*41 & 10 RP 35*).

Location: Houston, Tex.
Capacity: 800 bbl. per day
Crudes: Oyster shell and clay; see Table 30; both purchased.
Power: Purchased.

Table 30. Crudes at Gulf Portland Cement Co.

Item	Percentages	
	Shell	Clay
SiO_2.....	1.50	51.00
Fe_2O_3.....	0.50	5.25
Al_2O_3.....		15.00
CaO.....	53.80	10.00
MgO.....	0.25	2.50
Loss.....	43.21	15.10

Legend for Fig. 24:

1. <1 1/2-in.; by 300-cyd. barges from Galveston Bay.
2. Clamshell crane.
3. Open storage.
4. 300-cyd. bin.
5. 14-in. tunnel conveyor; 1 @ 45-ft. chain-bucket elevator; 1 @ 50-cyd. steel surge bin; Jeffrey-Traylor vibrating feeder; 60 bbl. per hr.
6. Dock storage.
7. 1 @ 7×9-ft. ball mill; 64% solids; 15 tons <3-in. balls, 20 1/2 r.p.m.; 200-hp. motor with gear reducer.
8. 1 @ 4×7-ft. Jeffrey-Traylor vibrating screen; 14-m. aperture; 200% circulating load.
9. 2-in. Wilfley pump.
10. 1 @ 16-ft. wash mill.
11. 1 @ 2-in. Wilfley pump, 55 to 60% water.
12. 1 @ 13 1/2×20-ft. concrete tank.
13. 1 @ 13 1/2×15-ft. tank.
14. 1 @ 2-in. Wilfley pump; 1 Ferris-wheel feeder with overflow return to tank.
15. As (14).
16. Alternative.
17. 1 @ 7×22-ft. tube mill, 35 tons 7/8- and 5/8-in. steel balls, 23 r.p.m., 400-hp. motor; 60 bbl. per hr.; 92% <200-m.
18. 1 @ 2-in. Wilfley pump.
19. 3 @ 13 1/2×20-ft. conical-bottom concrete storage tanks; 3 @ 2-in. Wilfley pumps.
20. 2 blending tanks as (19); 42% water.
21. 2-in. Wilfley pump; Ferris-wheel feeder with gravity overflow return to (20).
22. 1 @ 8×220-ft. kiln; 60-ft. chain section; 70 ft. in burning zone lined with 6-in. 70% alumina brick; slope, 3/8 in. per ft.; max. speed, 55 sec. per rev., synchronized with feeder; 80 hp. installed; natural-gas fuel, 1,500 cu. ft. per bbl. cement; combustion air heated to 400° to 500° F. by drawing through cooler, with intermediate dust precipitation.
23. 1 @ 6×120-ft. rotary cooler, lined 60 ft. with 4 1/2-in. block, lifters throughout balance, spray cooled for last 15 ft.; slope, 1/2 in. per ft.; speed, 1 1/2 r.p.m.
24. 1 @ 6-in. drag-chain conveyor; chain-bucket elevator.
26. Alternative.

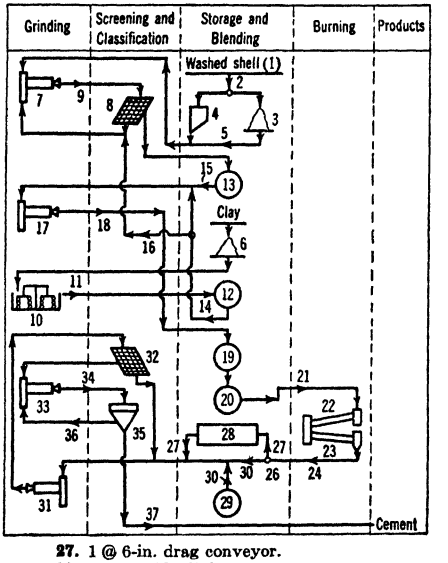

27. 1 @ 6-in. drag conveyor.
28. 15,000-bbl. clinker storage.
29. 1 @ 13 1/2 (diam.)×30-ft. gypsum-storage tank with continuous chain-bucket elevator for loading and unloading.
30. Waytrol vibrating feeder.
31. 1 @ 8×5-ft. ball mill, 20 1/2 r.p.m., 150-hp. motor with gear reducer; 12,000 lb. <5-in. steel balls.
32. 1 @ 4×7-ft. Jeffrey-Traylor vibrating screen, 18-m. aperture.
33. 2 @ 5×22-ft. tube mills; 29 r.p.m.; 30,000 lb. 1 1/4-in. Concavex; 200-hp. motor.
34. 2 chain-bucket elevators; screw conveyor.
35. 1 @ 14-ft. Raymond air classifier.
36. 2 screw conveyors.
37. 1 @ 4-in. Fuller-Kinyon pump; 35,000-bbl. storage; bagging and loading.

FIG. 24. GULF PORTLAND CEMENT CO.

Summary. No crushing. Two-stage raw grinding with the circuit closed in the first stage by a screen. Wet blending. Two-stage closed-circuit clinker grinding; the first stage closed by screen and the second by air classifier.

SECTION 4

CRUSHING

ART.		PAGE
1.	Introduction	01
2.	Jaw crushers	02
3.	Gyratory crushers	21
4.	Comparison of jaw and gyratory crushers	34
5.	Sledging rolls	36
6.	Reduction-gyratory crusher	40
7.	Cone-type crushers	44
8.	Rolls	55
9.	Hammer mills	77
10.	Stamps	87
11.	Miscellaneous methods of breaking	92
12.	Crushing plants	93

1. INTRODUCTION

Definitions. Comminution is normally the first step in beneficiation of solid minerals. It is usually a stage process, utilizing in the successive steps machines especially suitable for reduction of particular sizes. The stages starting with the crude as mined or quarried and comprising successive reduction steps down to a final stage or stages employed for production of finest sizes are called CRUSHING. In contradistinction, comminution to 20-m. or finer is called GRINDING (Secs. 5, 6). There is a twilight zone in which the product is 6- to 10- or 14-m. limiting size, which is either crushing or grinding according to the type of machine used. PRIMARY CRUSHING is the first crushing stage; SECONDARY CRUSHING is the second, etc. COARSE CRUSHING includes crushing operations discharging at sizes 4- to 6-in. or coarser; INTERMEDIATE CRUSHING comprises operations taking feeds 6- or 8-in. maximum and making products down to $^1/_2$- or $^3/_8$-in.; FINE CRUSHING is reduction by crushing to $^1/_4$-in. or finer; the distinctions are not sharp.

CRUSHING MACHINES

Mechanical principles. Crushing is a mechanical operation in which a sufficient force is applied to relatively brittle solid particles in such directions that failure of the bonding forces in the particles is brought about. When the problem of crushing is thus approached, it becomes clear that crushing machines must be designed to exert either pushes or pulls on individual particles, since there are no other kinds of mechanical forces, and that the solid particles must be so introduced into and maintained in the force zone that the forces available can be applied to them. The study of the mechanics of materials has resulted in a classification of mechanical forces and of the structural elements for resisting them which, applied in reverse, supplies a terminology and basis for classification of crushing machines along mechanical lines. Thus the common load-bearing members are beams, columns, and ties; stresses induced in these by loading are tensile, compressive, and shearing; and the applied loads are stationary, slow-moving, or impact. Most crushers load the solid particles they crush as beams or short columns, but explosive shattering, whether by dynamite or by steam (Art. 11), loads them largely as ties. The induced stresses are mostly those of compression and shear, but tensile stresses arise in beam loading as well as in explosive shattering. The rate of loading in the majority of crushing machines is gradual; impact crushers form an important class, however; stationary loading is unknown.

With one or two relatively unimportant exceptions, all rock crushers taking coarse feeds apply pressure gradually to particles which take the load as simple beams or short columns. Two general types of mechanism are employed, *viz.*, (1) reciprocating breakers in which the crushing surfaces alternately approach and withdraw from each other, and (2) continuous breakers in which, in the crushing zone, there is continuous approach of the crushing surfaces to a substantially fixed predetermined minimum spacing. Reciprocating-pressure breakers include jaw, gyratory, cone, and gyrasphere crushers; continuous-pressure breakers are typified by rolls, single-roll crushers, and the so-called roller mills. Impact crushers form a group comprising mechanisms some of which, *e.g.*, stamps, load the particles primarily as short columns, whereas others load by striking particles in sus-

pension or by hurling them at high speed against stationary surfaces; hammer mills are typical of this latter class. Tumbling mills (ball mills, rod mills, etc.) utilize both continuous-pressure and impact mechanisms. Blasting, explosive shattering, and decrepitation (fire-setting) are tension-type breaking operations; all three are relatively unimportant as crushing operations, although blasting is, of course, pre-eminently useful in rock excavation.

A crushing machine must not only break the rock but must provide means for continuous presentation of uncrushed material to the crushing zone and continuous discharge of crushed material therefrom. Gravity is the force employed for presentation in the great majority of machines; gravity, gravity aided by the carrying force of a fluid (air or water), and gravity aided by the mechanical impulse of the crushing surfaces are the usual means of discharge. In some cases, however, gravity is used as a retarding force against the discharge impulsion of a stream of fluid by putting a weir-type baffle in the path of the discharge stream; in other cases discharge is regulated—and retarded—by a screen or similar perforate septum.

The size characteristics of a crushed product are determined, all other things being equal, by the mechanical principles employed in the crushing machine. Gradual application of load, loading particles as beams and short columns, and rapid and unhindered discharge from the crushing zone make for a granular product with a minimum of very fine material; impact, shear, and slow restricted discharge all tend to produce fines. Cumulative weight-per cent. size curves (see Figs. 15, 33, 49) for the product of crushers employing the first group of principles exclusively approach nearest to straight lines; the product of the grinding pan, which employs shear (abrasion) for breaking and interposes a high weir in the path of the water-borne discharge, plots as a highly concave curve. With doubtful exceptions the sizing curves of the products of all other comminuters fall between these limits.

Classification of crushers. Coarse crushers or breakers for rock are the jaw crusher, gyratory crusher, single-roll crusher, sledging or slugging rolls, and, occasionally, the hammer mill. Intermediate crushers are the reduction gyratory, cone crusher, hammer mill, stamp, and, occasionally, rolls. Fine crushers are rolls, hammer mills, short-head cones, fine-reduction gyratories, and stamps; certain grinding machines, *e.g.*, the rod mill (Sec. 5), may be used for fine crushing.

In general, jaw and gyratory crushers are pre-eminently adapted to breaking hard, tough, abrasive rocks. They are, therefore, used for the majority of metalliferous ores, which, it so happens, occur mostly with gangues of this description. The primary roll crushers and the hammer mill cannot break such rocks economically but are particularly useful with the relatively soft, friable and sticky rocks that are characteristic of many nonmetallic mineral deposits.

2. JAW CRUSHERS

Jaw crushers are reciprocating-pressure breakers, employing beam and short-column loading and having unhindered gravity discharge. They consist essentially of two crushing surfaces set at a small angle convergent downward, one fixed, the other movable and caused to approach and recede alternately from the fixed surface. The best-known type is the Blake, with movable jaw pivoted at top. The Dodge has the movable jaw pivoted at the bottom. The single-toggle type, in which the swing jaw is hung on an eccentric bearing on the drive shaft, and the horizontal-pitman machine, in which the pitman works directly on the bottom of the swing jaw, eliminating toggles, are relatively newcomers. Large primary jaw crushers are almost without exception of the Blake type. Single-toggle and horizontal-pitman machines are available as yet (1940) only in sizes up to 24×36-in. The Dodge (lever-type) has little or no present use in ore or rock crushing.

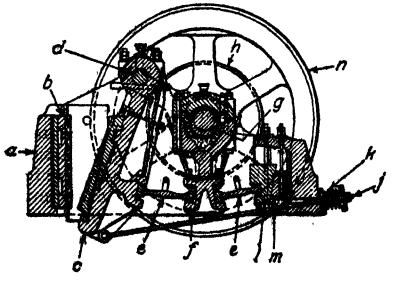

FIG. 1. Blake jaw crusher.

Blake breaker (Fig. 1) consists of a main frame *a* carrying a fixed jaw *b* and a movable jaw *c*, the latter pivoted at the top on the swing-jaw shaft *d*. The movable jaw is caused to oscillate by the action of toggles *e* and pitman *f* actuated by the eccentric *g* through the medium of pulleys *h* mounted on the drive shaft. The movable jaw is held up against the toggles by tension rod *j* and spring *k*. The rear toggle is seated against adjusting block *l*. The horizontal position of the rear toggle seat is changed by raising or lowering the block *m*

Table 1. Composite catalogue data for Blake crushers with straight-element jaw plates

Size of receiving opening, in. *b*	Approximate hourly capacities (*a*) to open settings stated, in.								Recommended r.p.m., range	Recommended motor hp., range	Weight, lb., range	Fall through machine, ft.
	Set	Tons	Set	Tons	Set	Tons	Set	Tons				
7×10	3/4	2	1	2.5	1 1/2	4	2	5.5	250 to 300	7 to 8	6,000 to 8,400	2.3
9×15	1	5.5	1 1/2	8.2	2	9	2 1/2	11.2	250 to 300	10 to 15	7,500 to 16,900	2.0
10×20	1 1/2	12.5	2	16	2 1/2	18	3	20	250 to 300	14 to 20	8,800 to 22,300	2.2
12×24	1 1/2	20	2	25	2 1/2	25	3	30	250 to 300	20 to 25	22,600 to 45,000	2.5
15×24	1 1/2	15	2	18	2 1/2	25	3	33	210 to 300	25 to 35	15,000 to 33,000	2.8
15×30	2	23.5	3	37.5	4	50	.....	.....	250	35 to 55	17,000 to 40,000	2.8
18×24	2	24	2 1/2	30	3	35	7	70	230 to 300	30 to 40	32,700 to 54,100	3.5
18×30	2	27.5	3	41	4	60	7	80	240 to 300	40 to 55	41,500 to 55,500	3.5
18×36	2	32.5	2 1/2	40	3	60	.....	.....	225 to 300	56 to 75	59,000 to 63,000	3.5
24×30	2	40	2 1/2	45	3	50	7	90	250 to 300	50 to 65	57,000 to 67,000	4.2
24×36	2	37.5	3	55	4	75	5	90	180 to 300	60 to 80	56,000 to 100,000	4.2
30×36	2 1/2	48	5	90	6	112.5	7	125	200 to 300	60 to 80	58,000 to 85,000	5.0
30×42	3	66	4	102	5	128	6	150	175 to 300	90 to 115	62,500 to 130,000	5.0
30×48	4	95	5	122	6	170	7	225	175 to 300	100 to 225	92,000 to 180,000	5.0
30×72	4	150	5	180	6	220	.....	.....	175 to 195	150	120,000 to 162,000	5.0
36×42	4	76	5	108	6	160	8	235	175 to 300	90 to 115	93,000 to 131,000	6.2
36×48	4	107	5	148	6	175	8	260	160 to 300	100 to 150	95,000 to 215,000	6.2
42×48	5	130	6	150	8	260	10	320	150 to 250	110 to 150	155,000 to 218,000	7.2
42×60	5	180	6	225	7	252	9	320	125 to 250	140 to 165	180,000 to 227,000	7.2
48×60	5	165	6	205	8	340	10	515	125 to 200	90 to 200	205,000 to 245,000	8.0
48×72	6	228	7	315	8	320	10	400	125 to 150	150 to 215	240,000 to 257,000	8.0
60×84	6	270	7	330	9	430	10	450	80 to 100	100 to 300	415,000 to 500,000	9.5
66×86	8	420	9	480	10	595	12	800	80 to 90	250 to 300	460,000 to 680,000	10.5

a Capacities are based on run-of-quarry thick-bedded limestone of moderate hardness; scalped at the upper end to insure ready nip, and at the lower end to remove material that would pass through without appreciable reduction; fed steadily at maximum capacity. See p. 13 for adjustments for feeds of different lithological character, and p. 07 for the effect of curved jaw plates. Apparent discrepancies in the listed tonnages reflect, in part, differences in degree of conservatism on the part of manufacturers and, in part, differences as to speed, weight, ruggedness, etc.

b Other sizes are made, particularly with a larger length-to-gape ratio, but those listed comprise the range of usual sizes.

by means of the bolt shown, thus permitting sufficient adjustment of discharge setting to take up for jaw-plate wear. In some crushers the position of the rear toggle seat is varied by shimming. The throw of the swing jaw may be varied slightly by raising or lowering block *l* or, in some makes, by varying the position of the rear toggle seat on block *m*. Heavy flywheels *n* are mounted on the drive shaft for the purpose of lessening the intermittent character of the load on the prime mover. A jaw crusher breaks rock only during that half of each revolution in which the movable jaw is approaching the fixed jaw; during the other half revolution the only work done is that in overcoming friction. Without flywheels a driving belt flaps badly and there is a tendency for the prime mover to run away on the unloaded half of the revolution while it is subject to a relatively enormous power draft on the loaded half. Flywheels average the load by storing energy during the unloaded half of the revolution and returning it during the loaded half. Table 1 presents essential data concerning Blake crushers, taken from manufacturers' catalogues. For many sizes the figures given have been checked against operating data and found to be conservative.

Main frame must be heavy enough to absorb vibration and strong enough to withstand heavy shock loads which produce tensile stresses around the mouth and near the base, and compression under the main bearings. There is considerable racking strain owing to uneven loading of the jaws. In small crushers (up to 15×30-in.) the frame is usually made in one piece, of cast iron (tensile strength, 20,000 to 30,000 lb. per sq. in.), high-strength cast iron (30,000 to 50,000), cast semi-steel (28,000 to 35,000), or cast steel (60,000 to 75,000). Recently certain manufacturers have made frames for small crushers of heavy welded steel plate, with heavy reinforcing ribs welded on. In large crushers a cast-steel frame, thoroughly annealed, is made in four pieces, two ends and two sides. Sometimes, when installation difficulties demand, the sides are made in two pieces, split horizontally. These frame parts are fitted together with carefully machined tongue-and-groove joints and secured by heavy bolts and tie rods of high-carbon steel (100,000 to 150,000 tensile strength) put in hot. Castings are heavily ribbed to give strength, while allowing considerable saving in weight. The principal tensile stresses are longitudinal, and the longitudinal tie rods are made sufficiently heavy to withstand these stresses without aid from the sides of the frame. Bearings for the pitman and swing-jaw shafts are best cast integral with the frame to aid in shaft alignment. The sides should be strengthened at these bearings by ribs, and in addition, by cross tie rods or by collars set in grooves or screwed onto the shafts. Cast-iron and semi-steel one-piece frames are sometimes reinforced with steel, shrunk on around the jaw openings and base. The CALUMET & HECLA-TYPE crusher has a one-piece ribbed frame reinforced by 3 @ 5-in. longitudinal bolts each side, 3 @ 4-in. bolts across the front end, and 2 @ 4-in. bolts across the rear end. By this expedient the weight of a 24×48-in. crusher is kept down to 80,000 lb. Modern trends are toward lighter crushers made of high-strength alloys. A crusher that is too light will, however, tend to shake either itself or its foundation to pieces.

Swing jaw is subjected almost entirely to bending loads. It is made of the same material as the frame, and, in large crushers, is similarly ribbed. It is shrunk or otherwise rigidly fastened to the swing-jaw shaft in order to bring the movement into bearings that are readily accessible for lubrication. The face of the jaw is machined to give an even bearing for the jaw plates. Some manufacturers make replaceable toe plates of special tough steel, *e.g.*, chrome steel, for the swing jaw, this being the only part of the swing jaw that is subjected to excessive wear.

Pitman stresses in crushers properly designed and built are almost wholly tensile, but torsional stresses sufficient to produce failure may be set up by improper toggles. In all but the smallest crushers the pitman is usually made of cast steel, thoroughly annealed. Every attempt is made to make it of the least weight consonant with the required strength. This end is ordinarily attained by the use of a heavy ribbed casting of box section, but one manufacturer makes a cast-steel cap and a toggle support separately and joins them together with annealed open-hearth forged-steel tension rods; while another welds together special shapes designed for maximum strength and rigidity with minimum weight. Several manufacturers of large crushers support the pitman on a nest of springs resting on a heavy cross-head on the frame. This reduces friction and consequent heating of the bearings, thereby saving power and lubricants and lessening the necessity for pitman cooling. At CALUMET & HECLA (*100 J 11*) substitution of a spring-supported pitman for the old style reduced the power consumption on a given crusher from 29 to 16 hp. Bolts holding down the pitman cap should have fine threads to aid adjustment.



FIG. 2. Toggle with replaceable ends.

Toggles are subjected to compression only. The ends of the toggles, rolling or sliding in the toggle seats, are difficult if not impossible to lubricate properly, and since substantially the full crushing force is concentrated here they must be specially hardened to resist wear. Toggles are made of cast iron in small, cheap crushers. Small crushers of better grade have cast semi-steel or steel toggles with chilled ends. Large crushers are fitted with cast-steel toggles with chilled ends or with toggles made of alloy steels. One manufacturer makes toggles with replaceable ends (Fig. 2) for crushers of any type and size; one mill reports a life of 4 to 6 mo. for them. In many crushers the rear toggle is made the BREAKING POINT to relieve strain when uncrushable material gets into the jaws. In some cases this is accomplished by splitting the toggle along a diagonal plane as in Fig. 3 and riveting together with just enough metal to withstand all normal strains but insufficient to stand an excessive load. At TALISMAN MINE,

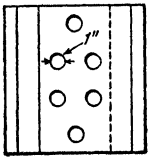

FIG. 3. Split toggle for jaw crusher.

N. Z., six 1-in. rivets in a 16×10-in. crusher sheared with a hammer head. At LYELL COMSTOCK, Mt. Lyell, twelve 1-in. rivets were used in a 12×20-in. crusher. Some manufacturers make the rear toggle itself of cast iron of such light section that it fails when excessive load is applied.

Life reported ranges from 45 days to several years, the majority less than a year.

Toggle seats are subjected to the same wear as toggle ends, but are less easily replaced and hence greater care is taken to insure long life. In small crushers they are made of hard, high-carbon steel; in large crushers, of manganese or chrome steel. From its properties, a chrome steel containing 1 to 2% chromium and about 1% carbon, hardened, should be the best possible material for this service. A rolling toggle, such as illustrated in Fig. 4*a*, with chrome- or manganese-steel seat should be superior to any form of sliding toggle such as illustrated in Fig. 4*b*, provided that it can be reasonably dust-proofed. One manufacturer uses steel shafting, suitably attached to swing jaw and adjusting block for front and rear toggle seats respectively, and another shaft, carried in the pitman, as a common bearing or rocker for both toggles, the toggle ends being correspondingly concaved for half-bearings. Heavy oil is forced into these bearings through flexible pipes.

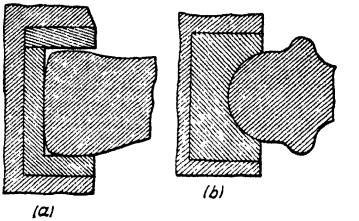

FIG. 4. Toggles and toggle seats.

Life reported in the mills ranges from 90 days to several years, the majority less than 1 year. Manganese-steel blocks on large crushers under fairly heavy load lasted from 1 to 2 years.

Shafts are subjected to enormous bending stresses and should be of large diameter to prevent deflection and consequent heating of bearings, as well as to guard against breakage. They are made of best quality high-carbon steel forgings, heat-treated and tempered, turned and polished, or of an alloy steel, such as Cr-Ni or Cr-V.

Bearings are heavily loaded even when the crusher is running light. They should, therefore, be of large diameter and as long as possible. In one-piece frames the bearings should be cast integral with the frame to aid in proper alignment of shafts. When frames are cast sectional, or welded, proper alignment is obtained by the use of ball-and-socket bearings. The pitman-eccentric bearing is water-cooled in most large crushers, even those in which the pitman is spring-supported. The pitman-shaft end bearings are often likewise water-cooled in large crushers (30-in. opening and upward). The best quality of hard babbitt is used. The frame bearings are babbitted in the frame in the small crushers, but in most larger crushers renewable semi-steel babbitted split bushings are employed. Interchangeable bearing liners save time when rebabbitting is necessary.

Flywheels are subjected to heavy strains by reason of the rapidly and greatly varying load on the crusher and must, therefore, be built especially strong. They are usually made of cast iron or semi-steel, but when cast in one piece, special precautions must be taken to insure against cooling strains. Some manufacturers cast rim, hub, and arms separately and thus eliminate shrinkage strain. One manufacturer keys the flywheel to the shaft with compression keys that allow slip with overloading, but this is probably an unnecessary precaution so far as flywheel breakage is concerned, and it is insufficient provision as a breaking point to save the crusher bearings in case of entrance of tramp iron. Rims on all large crushers are cored for pockets to allow barring over and are crowned when the flywheels are to be used as drive pulleys. Some manufacturers place weights on the rim to counterbalance the weight of the pitman.

At CALUMET & HECLA the end of the shaft is marked with an arrow to show the position of the eccentric and thus make it apparent which way to turn in order to ease off when the crusher is clogged.

Heat treatment of crusher steel is highly important. Harder (*115 J 314*) tested parts of jaw and gyratory crushers and rolls that had failed in service and found in all cases that the tensile and impact strengths, toughness, and hardness were markedly increased by simple heat treatment.

Drive of small crushers is by a single pulley carried on an extension of the eccentric shaft or bolted to a flywheel. The usual practice is to use two pulleys on crushers with greater than 24-in. width of receiving opening, if drive is from a countershaft, but when direct belt drive from a motor is employed, one pulley is ordinarily used. At CREIGHTON mines, Ont., a 30×42-in. crusher is driven by two 100-hp. motors. When two drive pulleys are used, each should be sufficient for independent drive. The principal objection to single-pulley drive is the unbalanced side pull on the bearings. This is not serious, if the shaft and bearings are properly designed. In some large crushers the flywheels are replaced by extra heavy flanged drive pulleys or rope sheaves. Lenix system or some form of multibelt drive is frequently used for driving crushers of all sizes on account of the advantage of compactness in installation. Ordinary pulley dimensions are based on transmission of 1 hp. per inch of drive belt traveling at 1,000 f.p.m.

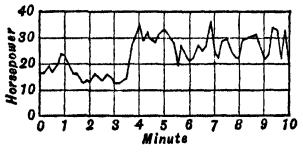

FIG. 5. Power draft of 18×36-in. Blake crusher.

Installed horsepower is generally well in excess of the average drawn, in order to take care of the starting load, which may run to 100% in excess of full-load average. If, however, the motor has temporary overload capacity sufficient to carry the starting load, a motor with full-load rating of 125% of average full-load power will take care of instantaneous peak loads. The shape of a jaw crusher power-draft curve at WITHERBEE SHERMAN & CO. is given in Fig. 5. This shows fluctuations from 19 to 37 hp. within a minute for an 18×36-in. crusher running under full load (186 r.p.m.; 8- to 10-in. max. size of feed; <4-in. product; 102 t.p.h.). Practice in respect to motor installations varies widely (see Table 8); the average ratio of full-load to installed power is probably near

0.85. If this is increased much there will be serious speed reduction with consequent clogging under full-load conditions. Fig. 6 gives average values for installed horsepower *vs.* dimensions of receiving opening. The curve has a semi-rational basis in that the product plotted as ordinates, *viz.*, *LG*, is approximately equal to half the working area of the swing jaw, which area, in a fully loaded crusher, should be proportional to the power draft.

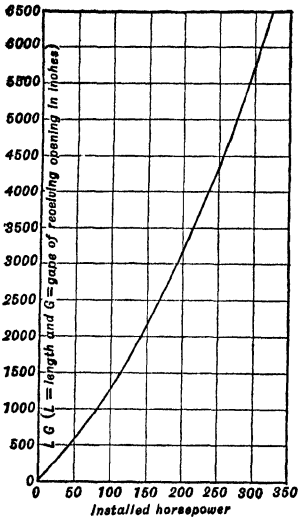

FIG. 6. Installed horsepower *vs.* area of receiving opening for Blake-type jaw crushers.

Hand of drive is ordinarily specified as of an observer facing the crushing end of the machine. Some crushers are made with a symmetrical pitman shaft, in which case the hand is interchangeable on the job. Others must be specified on purchase.

Lubrication of jaw crushers is difficult on account of the great pressures on the bearings and the large amount of dust and grit present. All well-built crushers use forced feed of either grease or oil. Because of the way in which exuding grease forms a collar that excludes dust and grit, most manufacturers use grease fed by means of compression cups with automatic or manual feed. Some crushers are fitted with compression feed to the under side of the pitman-eccentric and pitman-shaft bearings and large grease or oil reservoirs on top for gravity feed. Toggle seats are most difficult to lubricate, and that design of toggle and seat is best that minimizes the need for lubrication.

Consumption of lubricant as reported by various mills is shown in Table 8. The enormous differences are apparently due to differences in crusher duty, since high consumption of lubricant corresponds to heavily loaded crushers and *vice versa*. Difference in character of lubricant will also cause tremendous differences in consumption and friction losses. The lubrication engineers of the large oil companies have usually had considerable experience in the lubrication of heavy machinery; their recommendations as well as those of the machine manufacturer should be given close consideration. It may be taken without question that any haphazard choice of lubricant is almost certainly wrong and that an independent decision of a plant operator or purchasing agent made without careful and prolonged testing for the specific service will probably result in less efficient lubrication than that which would be recommended by the sales engineers of either the machine manufacturer or of the lubricant maker.

Jaw plates. The principal wear on the crusher comes on these and on the cheek plates. They are, therefore, made replaceable. Further, wear on the jaw plates is uneven, and in order to lessen the amount of metal discarded in the form of worn plates they are made reversible. In the case of large crushers with sectional jaw plates they are also made interchangeable. Thus in a small crusher, when the jaw plates become worn at the throat, where wear is greatest, they are turned end for end and their life is practically doubled. When plates are sectionalized horizontally, two wears are added for each such sectionalizing. When the form of surface corrugation permits, further increase in life of plates is gained by also sectionalizing vertically, when four wears at the throat can be had from each section. In addition to longer life, sectionalizing makes for ease in handling, which is a great advantage in large crushers. Materials used for jaw plates are chilled iron, white iron, high-carbon cast steel, forged steel, manganese and chrome steels. The great majority of plants use manganese-steel plates. This material is particularly fitted for such service on account of the fact that it is tough and that surface abrasion produces rapid and marked surface hardening. One special form of jaw plate is made of forged and rolled chrome-steel bars cast-welded into a back of open-hearth steel and subsequently tempered. This gives a hard chrome-steel crushing surface, while the untempered back is tough and resists cracking. Chilled steel wears unevenly because it is initially uneven in hardness. CALUMET & HECLA uses chilled cast-iron plates for crushing soft amygdaloid and manganese steel for the hard conglomerate. The main frame and swing jaw are carefully surfaced to give full, even bearing to the jaw plates, or the plates may be backed by zinc or hard babbitt. Plates in small crushers are usually wedged in; those in large crushers are bolted in. One maker places a buffer plate between the wearing plates and frame to take up any wear on frame due to the abrasive action of grit, in case the liner plates loosen and vibrate. Loose plates, or plates unevenly or incompletely backed, may fail by bending stress. To guard against such failure plates in some large crushers are made 5 1/2 to 6 in. thick.

Life of jaw plates varies according to the material used and service required. (See Table 8.) Three to six months is an average life for manganese-steel plates in ordinary service. One plant reports 40 days for manganese-steel plates in an 18×30-in. crusher handling 1,500 tons per 24 hr. of hard granitic ore. Another reports 2 to 4 years for plates of the same material in a 36×42-in. crusher handling 4,000 to 5,000 tons per 24 hr. of hard slate with some quartzite. The consumption of manganese steel,

including waste on rejection, is from 0.01 to 0.06 lb. per ton of rock crushed. The consumption of chilled iron in small crushers ranges from 0.02 to 0.2 lb. per ton and averages about 0.1 lb. per ton. Johnson (*101 J 907*) gives the following comparative figures on chrome and manganese steel in the same service: chrome steel, weight of plates, 921 lb.; cost f.o.b. mill, $96.93; life, 70,206 tons: manganese steel, weight, 740 lb.; cost, $72.62; life, 86,478 tons. It must be remembered that manganese steel, as well as all other metals, varies markedly in grade and wearing qualities. Waterhouse (*38 Aa 107*) cites a set of manganese-steel jaw plates of Sheffield manufacture that served to crush 6,100 tons in a small crusher against a life of 4,500 tons for local Australian plates of substantially the same manganese content. Del Mar (*40 MEW 687*) recommends 13% Mn as the best alloy.

Building up worn plates by surface welding was practiced (1939) by 3 out of 30-odd plants reporting; the practice is increasing rapidly (1943).

Time required to change jaw and cheek plates is from 1 to 3 hr. for crushers up to 24×36-in. One mill using a 36×42-in. crusher reports 8 hr. to make a change of plates.

Shape of plates. Jaw plates are made in two general shapes. Older practice, still represented by the majority of installations, used plates in which longitudinal surface elements were straight lines. Recently plates with these elements convex outward have been introduced. They are usually placed on the swing jaw only, but some manufacturers convex both jaws. One manufacturer makes the fixed jaw convex and the lower end of the swing jaw concave. The effect of curvature on the shape of the crushing zone is shown in Fig. 7. The theoretical result of this difference is indicated in Fig. 8, in which the numbered horizontal lines delimit zones which are defined, on a rock-size basis, as the successive downward positions of particles broken to just the closed dimension between the jaws at any level and falling successively to new seats on recession of the swing jaw. Thus a piece of rock which just seats along the line *1* with the swing jaw in closed position will just seat along line *2* when the jaw is in open position, and the vertical distance from *1* to *2* represents its advance for this movement. If this particle, seated at *2*, broke to just the extent of the forward movement of the jaw at *2* on the next forward stroke, it would advance to *3* on the next recession, etc. It is clear from the figure that with the straight jaw the areas of the trapezoidal spaces between the successive position lines decrease downward, and, therefore, that the large pieces in progressive zones will have progressively less relative space, *i.e.*, these zones will have a progressively increasing tendency to choke, this tendency reaching a maximum at the throat. With the curved plate, the minimum trapezoidal area occurs well above the throat, and thereafter the larger particles have room to spread out as they progress, thus permitting not only increasingly free movement of themselves but also increasingly ready passage between them and out of the crushing zone for the fine material.

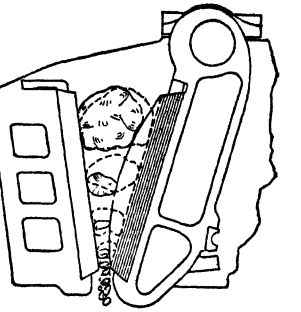

FIG. 7. Diagrammatic comparison of reductions with straight and with curved jaw plates. (*After Allis-Chalmers Mfg. Co.*)

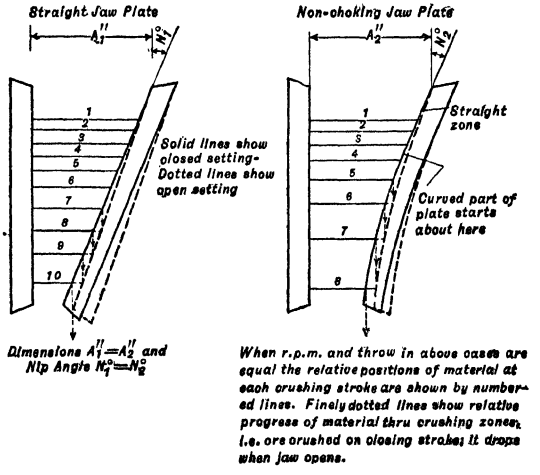

FIG. 8. Comparison of size zones with straight and curved jaw plates. (*After Allis-Chalmers Mfg. Co.*)

The difference in shape in the two crushing zones causes a number of differences in operation and performance.

1. Since the normal choking point, *i.e.*, the point at which the volume of coarsely crushed rock becomes too great for free fall past the next lower horizontal section of the crushing zone, is moved upward with the curved plate to a point well above the throat, it occurs where the motion of the swing jaw is relatively small and the percentage of fines is low. Hence the tendency to compact the material in the zone is much less than at the throat, and much less choking occurs than with the straight plates.

2. The plate area over which fine crushing occurs is much greater with the curved plate; consequently the depth of plate wear per ton crushed at any given point in the fine-crushing zone is decreased, with correspondingly longer duty in the machine, less plate reject loss on removal, and so less plate consumption per ton crushed.

3. Throw may be decreased with the curved plate, since there is no necessity to free the throat. The machine may, therefore, be speeded up, which Fahrenwald *et al.* (*138 # 12 J 45*) found would cause an increase in new surface produced with no corresponding increase in power consumption. The combined

result of these two changes is a finer and more uniform product with the curved plate for the same open setting—since the higher the speed the more nearly the product size corresponds to the closed setting—or, conversely, a higher capacity and higher tons per hp-hr. to the straight-plate maximum size.

4. For the same minimum throat opening the angle at the mouth is greater with the curved plate, or the GAPE (shorter dimension of receiving opening) must be smaller. Hence there will be more difficulty with initial nip (see p. 11) and a greater tendency to choke at the mouth. Curved plates should not, therefore, be substituted for straight when the crusher feed contains a large percentage of material near the crusher gape in size.

It is claimed that the use of curved plates will increase capacity over that with straight plates 33 to 50%. Operating confirmation is not yet available.

Crushing surface of jaw plates is made in a variety of forms. For relatively fine crushing and brittle rock, plane surfaces are best; for all-around coarse work, a surface corrugated vertically with 90° ridges as shown in Fig. 9 is best, the pitch of the corrugations being roughly equal to the maximum size of product desired. In crushing soft tough rock, ridges are likely to pulverize locally without effecting a break, with the result that material hangs up at the mouth and the crusher clogs. A partial remedy is to place a half-worn plate opposite a new one, but if the condition is aggravated, plates with the projections blunt and rounded (WAVE JAWS) should be used. These concentrate the breaking load without excessive local pulverization. They are especially suited to tough, slabby rock, like slate. Waved plates are used in several LAKE SUPERIOR copper mills in preference to corrugated, since they allow mass copper that has caught to be freed by working sideways, which cannot be done with corrugated plates.

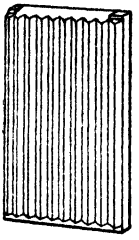

FIG. 9. Corrugated jaw plate.

Cheek plates take wear on the sides of the crushing opening. The materials used are ordinarily the same as for jaw plates. The surfaces are plane. The plates are wedged in in small crushers and bolted through in large. The life of manganese-steel cheek plates is the same or slightly less than that of jaw plates of the same material, and metal consumption is usually less than 0.01 lb. per ton crushed. Chilled-iron plates have about one-quarter to one-third the life of manganese-steel.

Sectionalizing. Additionally to the sectionalization of the main frame already noted, most makers are prepared to sectionalize crushers up to 15×24-in. size to maximum weights of 300 lb. upward, the cost per lb. increasing with the extent of sectionalization. This type of construction is almost essential for installation in isolated rugged regions or for underground service. Total weight of sectional crushers is ordinarily less than that of the standard crusher of the same size. This fact, added to the inherent lessened rigidity, usually results in increased vibration with increased maintenance costs for the sectionalized machine.

Manufacturers. Acme Road Mach. Co., Allis-Chalmers Mfg. Co., Austin-Western Road Mach. Co., Birdsboro Steel Fdy. & Mach. Co., Chalmers & Williams, Colorado Iron Wks. Co., Denver Equipment Co., Eimco Corp., Farrell Fdy. & Mach. Co., Gibson, W. W., Gruendler Crusher & Pulverizer Co., Jeffrey Mfg. Co., Kennedy-Van Saun Mfg. & Eng. Corp., McLanahan & Stone Corp., Mine & Smelter Supply Co., Morse Bros. Mach. Co., Pennsylvania Crusher Co., Smith Eng. Wks., Stearns-Roger Mfg. Co., Straub Mfg. Co., Sturtevant Mill Co., Traylor Eng. & Mfg. Co., Webb Corp.

Adjustments of Blake crushers are (*a*) width of discharge opening, (*b*) THROW, *i.e.*, the distance traveled in each direction by the jaw at each revolution of the drive shaft, and (*c*) speed.

Width of discharge opening is adjusted by changing the length of the toggles, changing from worn to new or from thin to thick jaw plates, or by a wedge or shim adjustment of the rear toggle seat. Ordinarily only sufficient toggle-seat adjustment is provided to compensate for jaw-plate wear, and this adjustment is made from time to time as plates are worn down. Change in length of toggles is usually made only when the duty of the crusher changes and a wholly different size of product is desired.

Throw, in Blake crushers, is measured at the throat. It is adjustable in some crushers by a device for raising or lowering the rear toggle block and thus changing the angularity of the toggles, but ordinarily throw adjustment involves a change in the eccentric and requires a new pitman or, at the least, a new eccentric. Throw ranges from about $^3/_8$ in. as the minimum in small crushers up to 1 in. minimum in large crushers. The maximum throw is about three times the minimum figures.

The principal factor determining the length of throw is the character of rock to be crushed. If the rock is hard and brittle, so that the jaws do not pulverize locally and deformation prior to fracture is not great, the minimum throw may properly be employed. If the rock is of such character that the reverse situation prevails, and there is local pulverization and a tendency for the rock to crack and be deformed under load but not to fall apart, then the maximum throw should be used. Firm quartzitic and acid rocks generally require minimum throw; tough basic rocks, highly crystalline rocks, slabby rock, and decomposed rocks in general require the greater throws.

Speed can be varied only by change in the speed of the prime mover or by a change in pulley ratios in the power-transmission chain. Change in speed affects capacity and power consumption. It has no marked effect on the size of product with straight jaw plates, but increase in speed with curved plates tends to give a finer discharge.

LAKE SUPERIOR rock-house practice varies the speed according to the hardness of rock crushed (*100 J 55*). At QUINCY, breaking soft amygdaloid, the speed is 140 r.p.m.; at CALUMET & HECLA,

with a feed of hard conglomerate, the crusher is run at 175 r.p.m., and at COPPER RANGE, crushing dense amygdaloid, the speed is 185 r.p.m. Excessive speed causes heating. At MOOSE MOUNTAIN (*99 J 974*) a 24×36-in. crusher overheated when run at 250 r.p.m. but gave no trouble when run at 180. There was, however, an accompanying decrease in capacity.

Size of feed that can be taken by a jaw crusher continuously, *i.e.*, without clogging at the mouth, depends upon the gape, the allowable nip angle (Art. 8), and the angle between the jaw faces. Since the latter angle rarely exceeds 24°, and the maximum allowable nip angle for ordinary rock is about 33°, the latter two factors are not important except in the case of unusually slippery feeds. With such feeds JOHNS-MANVILLE (*113 J 674*) hold the nip angle to 18°. The essential requirement is that the lump enter the receiving opening far enough so that the bearing points on the jaws are sufficiently below the top that local pulverization at the contact points on jaw approach will not result in extrusion of the particle and loss of grip. Practically this means that the largest particles should seat with the contact points with the jaws at least one-quarter and better one-half the particle diameter below the top of the jaws. This works out that the thickness of the largest particle should not exceed 80 to 90% of the gape. Crushers will operate with occasional large particles seating higher than this, but mouth clogging is frequent if the crusher is being pushed.

Less throat clogging will occur with straight jaws, and the tonnage of material coarser than the open setting that can be crushed per unit of time will increase, if undersize is screened out ahead of the crusher and by-passed.

Reduction ratio is ordinarily defined broadly as the ratio of size of feed to size of product in a crushing operation. It is useful as a measure of what a crusher can do or is doing in the way of size reduction; as a partial indicator of the mechanical strains (DUTY) under which a crusher works; as an element in the determination of crusher capacity; and as a factor in the determination of crusher efficiency. No one method of calculation of the ratio gives a figure which is useful in all of these considerations; for this reason several reduction ratios are defined herein and designated by suitable names.

Limiting reduction ratio (R_L) is the ratio of the aperture passing all feed to the aperture of the same shape passing all product. It is the quantity normally understood to be meant when reduction ratio is referred to without further definition. It should be noted, however, that in calculating this ratio for primary crushers, for which sizing tests of feed are rarely, if ever, available, the usual designation for maximum size is the spacing of the stope or bin grizzly, and that this measures maximum *thickness* of feed, while a square- or round-mesh screen is normally used to size the product, and this measures intermediate dimensions of particles. Hence one or the other of these measurements must be adjusted before a correct limiting reduction ratio may be stated.

Shape factor. Shepard (*RI 3432*) has shown that the average ratios of minimum (t) : intermediate (w) : maximum (l) dimension of particles of the same broken rock are remarkably constant through a wide range of sizes and that the ratio of intermediate : minimum dimension, called herein the shape factor (F_s), ranges from about 1.7 for cubic-breaking rock to about 3.3 for relatively slabby rock; it may exceed the latter figure greatly for thin-bedded sedimentaries, some schists, slates, and the like. Hence, multiply mine-grizzly aperture by F_s, or divide the ring size passing all product thereby, in order to reduce the dimensions to a corresponding basis for ratio calculations.

Size of run-of-quarry rock is frequently given in terms of shovel-dipper sizes; this is equivalent to a square-mesh screen size.

$$R_L = \frac{w_f}{w_p} = \frac{t_f}{t_p} = \frac{F_s t_f}{w_p} \qquad (1)$$

where w and t are width and thickness respectively of a particle, and subscripts f and p denote respectively feed and product.

Apparent reduction ratio (R_A) is the ratio of the effective gape to the effective setting (s_e) of the crushing machine (open setting for low-speed primary crushers and closed setting for the high-speed secondaries). This ratio bears no necessary relation to actual size reduction as measured by screens. It is useful as a statement of what a rugged machine sufficiently powered could do in the way of maximum particle-size reduction at one pass. Minimum standard open settings for most jaw crushers permit a ratio of gape to open setting of 8 or 10 : 1; the ratio for recommended maximum open settings is usually between 3 and 4 : 1. *Miller* states that this ratio with straight-jaw machines should not exceed 6 on tough rock or 8 on soft rock. The range reported in Table 8 is 6 to 10.3, and averages 5.6; the average tends to be somewhat smaller for small crushers than for large.

$$R_A = \frac{0.85G}{s_e} \qquad (2)$$

Working reduction ratio (R_W) is the ratio of thickness of largest feed particle to effective set (s_e) of crusher. It indicates, when taken with the total tonnage passing through a machine, and compared with average performances or manufacturer's ratings for machines of the same size, the character of the duty.

$$R_W = \frac{t_f}{s_e} = \frac{w_f}{F_s s_e} \qquad (3)$$

Mean reduction ratio purports to be the ratio of average sizes of feed and product. True average size of crushed solids is, unfortunately, not capable of determination with our present knowledge (Sec. 19, Art. 18). Bond (*139 #7 J 49*) gives a method of approximating mean reduction ratio for the granular portions of fine feed and product. Plot cumulative per cent. retained against logarithm of screen size for both feed and product, using rectangular paper. (If testing sieves with a standard interval are used, size or ordinal numbers may be assigned to these, increasing by a constant from screen to screen, starting *e.g.*, with 1 for the limiting screen of the feed, thus 1, 2, 3, etc., to the finest screen used. If these ordinal numbers are then plotted directly against cumulative per cent. retained, on rectangular paper, the actual screen sizes are plotted on logarithmic scale. Fig. 10 shows such a plot.) A reduction-ratio curve may be plotted from the sizing curves as follows: (1) Assume that the abscissa of the mid-per cent. point for each approximately straight-line segment of the sizing curves is the average size of the material plotted over that particular segment; (2) select segments sufficiently short along the cumulative-per cent. axis so that both sizing curves are substantially straight over the range; (3) differences between ordinal numbers of feed and product at the selected mid-per cent. points are partial reduction ratios corresponding to the weights of feed material comprised within the particular sizing-curve segments. Plot these against cumulative percentage at each point and connect the resultant points in a smooth curve. It will be noted that further extension of the sizing curves must result in substantially parallel lines substantially parallel to the axis of ordinal numbers and that, therefore, the corresponding spread on the ordinal-number axis between mid-per cent. points will increase rapidly. Hence the reduction-ratio curve, if extended farther upward, would bend sharply to the left. It is definitely questionable, however, whether such geometric behavior represents actual physical fact. Certainly in the case plotted, representing operation of coarse rolls set at about 4-mm., it is not legitimate to conclude that the <0.15-mm. material in the feed suffered more severe crushing, as indicated by a higher reduction ratio, than did the coarse fraction of the feed. For this reason it would seem that only the substantially straight portion of the reduction-ratio curve is significant. The value of the mid-per cent. point of this curve may be defined as the MEAN REDUCTION RATIO.

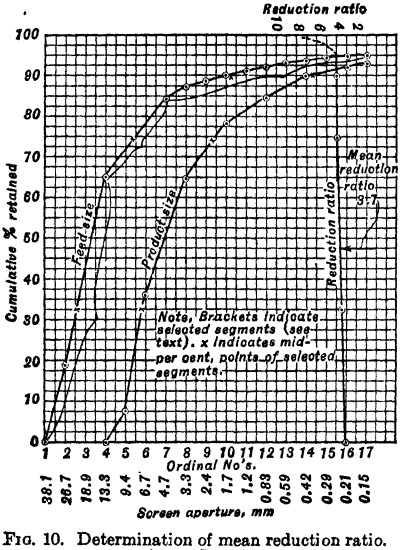

FIG. 10. Determination of mean reduction ratio. (*After Bond.*)

It is to be further noted that the reduction-ratio curve is a statement of relative diameters of feed and product over corresponding weight-percentage ranges. Since relative surfaces are inversely proportional to relative diameters, if mean shapes of coarse and fine fragments of the same rock are assumed to be the same, the reduction-ratio curve may also be taken as a curve of surface increase, using the same numerical scale, and the mean reduction ratio over the granular range is numerically equal to the mean surface-increase factor over the same range. For example, over the range of sizes plotted, the surface area of the product is about 3.7 times that of the feed.

80%-reduction ratio (R_{80}) is the ratio of the theoretical square-mesh apertures that would pass 80% of feed and product respectively. It was devised (*153 A 319*) to escape from the inaccuracy introduced into calculations of limiting reduction ratio by the presence of a small proportion of coarse slabby material. Thus when crushing slate or schist, for example, in a jaw crusher, a few slabs the full width of the crushing zone may discharge; since the width of these is the same as the width of the maximum feed particle, $R_L = 1.0$. But study of a large number of sizing curves shows that the effect of tramp coarse material on the shape of the curve has disappeared by the time the 20% cumulative weight-retained ordinate is reached, while the characteristic parts of feed and product curves have not yet converged enough to affect the value of the ratio materially.

Values of w_{80} (see below) for feed and product may be read directly from sizing curves or calculated from the screen tests by Eq. 4. The calculation is based on the assumption of straight-line size variation between the cumulative-weight-per cent. points that bracket 20%.

$$w_{80} = w_c - \frac{(20 - c)(w_c - w_f)}{f - c} \tag{4}$$

where w_{80}, w_c and w_f are respectively the 80%-size, and the apertures of the coarser and finer screens that bracket the 20% retained size, and f and c are, respectively, the cumulative percentage weights retained on w_f and w_c.

$$R_{80} = \frac{w_{80f}}{w_{80p}} \tag{5}$$

When screen tests are not available, 80%-sizes may be approximated, the method differing according to the data available. Thus run-of-mine and run-of-quarry rock may, without great error, be assumed to have a straight-line cumulative per cent. weight-retained curve, so that if the limiting-grizzly spacing (t_g) is known

$$w_{80f} = 0.8F_s t_g \tag{6}$$

Characteristic curves for the products of various crushing machines are given in Figs. 15, 33, 42, 43, and 49, in terms of percentage of limiting screen, and the corresponding 80%-size w_{80p} may be approximated from these, if the effective set is known. In general w_{80p} ranges between $0.5w_L$ and $0.6w_L$ (where w_L = aperture of limiting screen) for jaw or gyratory-type crushers; between $0.6w_L$ and $0.75w_L$ for open-circuit free-crushing rolls; $0.3w_L$ to $0.4w_L$ for choke crushing in rolls with a medium set; and $0.2w_L$ to $0.25w_L$ for choke crushing with fine set and heavy circulating load.

If no particle-size data are available, rough approximation of w_f and w_p and the corresponding 80%-sizes may be made in certain instances. Thus if a crusher with fixed gape G is being fed with as coarse material as it will take without bridging, the limiting feed thickness (t_{Lf}) may be taken equal to $0.85G$ and limiting thickness of product (t_{Lp}) = s_e. For rolls fed to just nip $t_{Lf} = s_e + D/40$ (from Eq. 13) and for rolls free-crushing $t_{Lp} = s_e$.

If unscalped feed (subscript u) is sent to a crusher, the undersize therein will affect the position of the 80%-point of the feed and may affect that of the product. Since such undersize is not ordinarily changed appreciably in size by passage through the crushing zone, its effect on R_{80} should be eliminated. If sizing tests are available, the correction may be made by replotting after eliminating from the feed all material having thickness less than the effective set. If sizing tests are not available, estimates of correction may be made as follows:

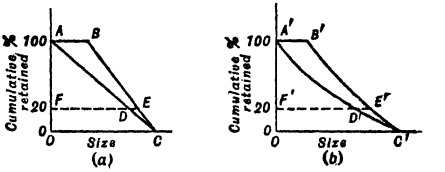

FIG. 11. 80%-points for scalped and unscalped broken rock.

For feeds comprising run-of-mine or run-of-quarry rock, the curves for unscalped and scalped (subscript s) feeds will approximate $\overline{AC}$ and $\overline{ABC}$ (Fig. 11, item *a*) respectively, $\overline{FD}$ and $\overline{FE}$ are the corresponding 80%-sizes, $\overline{AB}$ is the aperture of the scalping screen, and $\overline{DE}$ is the additive correction to $\overline{FD}(=w_{80u})$ to give $\overline{FE}(=w_{80s})$. From Fig. 11 it is apparent that $\overline{DE} : \overline{AB} = 20 : 100$ or

$$w_{80s} = w_{80u} + 0.2w_s \tag{7}$$

where w_s is the aperture of the scalping screen. But $w_{80u} = 0.8\,F_s t_g$ (from Eq. 6), hence

$$w_{80s} = 0.8F_s t_g + 0.2w_s \tag{7a}$$

If the feed is the product of a preceding crusher, the general shape of the sizing curve will be concave as in Fig. 11, item *b*, but the relationship between $\overline{D'E'}$ and $\overline{A'B'}$ is substantially the same as that between $\overline{DE}$ and $\overline{AB}$ and Eq. 7 may be applied.

R_{80} at 24 plants reported in Table 8 ranged from 2.2 to 8.3 and averaged 4.5.

Nip angle in jaw crushers is the angle formed by the jaw faces. The usual range is from 18° to 24° at open setting for straight-jaw machines. The nip angle increases as the jaw moves forward; hence, if the angle is too large with the jaws open the unfavorable condition is aggravated as the jaw closes. Kennedy (*17 MMt 139*) claims that this fact decreases the effective gape of a Blake jaw crusher about 25%.

Capacity of a Blake crusher (and of other reciprocating pressure-type crushers) is equal to the product of the integrated volume of the stream of crushed material passing the discharge opening per unit of time and the density of the stream. As such it is affected by the area of the discharge opening at open setting and by such elements of operation as affect the speed at which material is presented to the discharge opening, *e.g.*, character of rock, moisture content, throw, reciprocations per minute, nip angle, shape and surface character of jaw plates, method of feeding, and size reduction effected.

Hersam (*68 A 463*), working with a small crusher, found that SPECIFIC GRAVITY, CONSISTENCY, and for hard rock, a resistance to breaking that may be defined as CRUSHABILITY, all affect capacity. The effect of variation in DENSITY is indicated by Table 2. The column headed "Relative volumes per hour" shows that there is a distinct trend toward the passage of a larger volume of dense material through the crusher in a given length of time.

Table 2. Effect of density of feed on capacity of jaw crushers (*after Hersam*)

Material	Sp. gr.	Relative tons per hour	Relative volumes per hour
Coke	1.1	100	100
Coal	1.9	170	100
Granite	2.7	381	159
Stibnite in quartz	3.0	436	159
Chalcocite in quartz	4.4	641	162
Galena in quartz	6.2	950	172

FIBROUS MATERIALS, such as rich asbestos rock, and CLAYEY ROCK may be expected to cause capacity to fall well below catalogue figures. Sticking of clayey materials may be considerably lessened by allowing a trickle of water to run into the crusher with the feed. This tends to lubricate the crushing faces sufficiently to allow the compressed material to slide forward as the movable jaw recedes and thus to work through the crusher. In crushing SLATE, which cleaves easily and tends to discharge from the crusher in slabs much larger in one or two dimensions than would be expected from the crusher setting, there may be considerable reduction in capacity, owing to the measures that must be taken to prevent such discharge.

At STASO MILLING Co. discharge of slabs was prevented by attaching prongs at 6-in. intervals to the bottom of the swing jaw, these prongs projecting across the throat and under the fixed jaw plate. The feed to the crusher ranged from pieces that would just enter the 15×24-in. receiving opening to pieces that could pass through without any crushing. The crusher was set for a minimum opening of 1 5/16 in. and had a throw of 1 in. The capacity without prongs was 25 t.p.h. and the product contained about 2% of slabs that stayed on a 4-in. screen. The capacity with prongs was 20 t.p.h., but there was no slabby material in the product. The average size of the product was not greatly altered.

Table 3. Relative toughness of rocks (*after Snelling*) **and crushability factors** (k) **for use in Eq. 10**

Rock	Relative toughness	k
Limestone	1.0	1.0
Dolomite	1.0	1.0
Gneiss, coarse-grained	1.0	0.95
Syenite	1.0	0.95
Andesite	1.2	0.90
Slate	1.2	0.90
Granite, coarse-grained	1.2	0.90
Chert	1.5	0.80
Gabbro	1.6	0.80
Quartzite	1.9	0.80
Rhyolite	2.0	0.80
Granite, fine-grained	2.1	0.80
Diorite	2.1	0.80
Basalt	2.3	0.75
Diabase, fresh	3.0	0.65

Many attempts have been made to quantify the CRUSHABILITY of hard rocks, but none of them can be accepted as other than rough approximations. Snelling (*28 Proc. Eng. Soc. W. Penna., No. 8*) studied the effects of explosives on a variety of rocks and summarized his conclusions as in Table 3. Hersam found that the capacity of a jaw crusher on granite was about 90% of that with quartz; with trap, 83%. Allis-Chalmers Co. (*PC*) estimate that quartz, quartzitic ores, and firm (but not tough) ores generally can be crushed at a rate equal to catalogue figures; rates for tough acid igneous rocks are about 85 to 90% of catalogue ratings, and for tough basic igneous rocks such as traps and diabases, about 75 to 80%.

MOISTURE has very little effect on primary-crusher capacities except with unusual clay-bearing rocks. But in secondary crushers with unscalped feeds, moisture contents of 3 to 6%, which concentrate, of course, in the fines, may reduce capacity 50% or more owing to caking in the fine-crushing zone.

THROW, if sufficient to effect break, controls capacity primarily through its effect on the tendency to choke. Large throw permits relatively large relief of compressed grain mixtures in the choking zone, with corresponding acceleration of discharge of fines.

SPEED. Capacity increases with speed, but the increase is not proportionate (see Table 4 and also p. 08).

Table 4. Effect of speed on capacity of jaw crushers (*after Hersam*)

Revolutions per minute	Relative tons per hour
160	100
255	144
304	171
348	174
534	179
629	246

Table 5. Effect of nip angle on capacity of jaw crushers (*after Hersam*)

Angle of nip, degrees	Relative tons per hour
30	100
27	102
20	116
14	114

NIP ANGLE. The effect on capacity as found by Hersam is shown in Table 5. When the angles are near those common in practice but little effect is to be noticed.

METHOD OF FEEDING. Primary crushers are rarely fed to the limit of capacity. Such feeding requires a surge bin with nonclog outlet, a feed of roughly cubic character sized to a maximum thickness of about 85% gape, with all material that will pass the open setting removed, an efficient variable-rate feeder, and a vigilant attendant. Best average feeding conditions probably do not reach more than 75% of the maximum feed rate, and feeding with no storage between mine or quarry and crusher, and consequent intermittent charging probably averages nearer 25% than 50% of crusher capacity.

Table 6. Effect of reduction ratio on capacity of jaw crusher (*after Hersam*)

Size of feed, inches	Reduction ratio	Relative tons per hour
3 to 4	8.9	100
2 to 3	6.7	170
1 to 2	4.4	182
0.5 to 1	2.2	232
0.125 to 0.5	1.1	419

REDUCTION RATIO may, of course, be varied either by changing feed size with the setting constant or by varying set while holding feed size constant. In either case there is, within limits, an inverse change in capacity. Hersam reports the results summarized in Table 6, for a crusher having a minimum throat opening of 0.24 in. and a throw of 0.21 in., crushing a uniform granite of various sizes, when the ratio is decreased by decrease in feed size. Table 1 shows the other case.

The reduction ton (T_R) is a unit in which the capacity of a crusher may be stated in such a way as to take into consideration both the tonnage of solid crushed and the extent of size reduction. As used throughout this book it is defined as

$$T_R = TR_{80} \qquad (8)$$

where T = tons crushed per hr. If the feed contains undersize, this should be deducted

from the stated feed rate in order to determine T. Such undersize must also be allowed for in evaluating R_{80} (see p. 10). The comparative reduction ton (T_{Rc}) is a modification of T_R, related thereto by the equation

$$T_{Rc} = T_R/K \tag{9}$$

in which K is a factor designed to reduce a specific value of T_R to a common comparative basis for which $K = 1$. This corresponds to uniform full-capacity feeding of dry thick-bedded medium-hard limestone, which is the basis upon which the published capacity representations of most crusher manufacturers are founded. K may be quantified for particular cases from the relationship

$$K = kk'k'' \tag{10}$$

in which k is the crushability factor (see Table 3), k' is the moisture factor (p. 12), and k'' is the feed factor (p. 12). A value of $k'' = 1.0$ requires almost the equivalent of hand feeding in such a way as to maintain a continuously full crushing zone. Careful feeding from a bin by a positive mechanical feeder, start-stop controlled by a good crusher tender, the feeder discharge passing over a grizzly and thence to the crusher, may be assigned a k'' value of 0.75 to 0.85.

Fig. 12 gives capacity on thick-bedded limestone, in terms of comparative reduction tons per hr., plotted against gape, for straight-element jaw crushers of Blake type having a ratio of length of receiving opening L to gape G of 1.5 : 1. For other ratios multiply T_{Rc} by the factor $L/1.5G$. This graph is based on Table 1. Comparison with values of T_R from Table 8, reduced to the same basis, shows a range of performance to the plotted values of T_{Rc} of 0.3 to 1.8, averaging 0.96. Not too great dependence is to be placed on the numerical average. The figures for T_R in Table 8 involve considerable estimate as to size of feed and product. No estimate of K was possible. It is known that low values of T_R in Table 8 corresponded in many cases to crushers where over-capacity was a result of reception demands, while some of the high values correspond to cases in which undersize was passed through the crusher in indeterminate amounts and credited to tonnage.

Fig. 12, taken with Eq. 9, may be used to estimate the size of standard Blake-type jaw crusher required for any given duty.

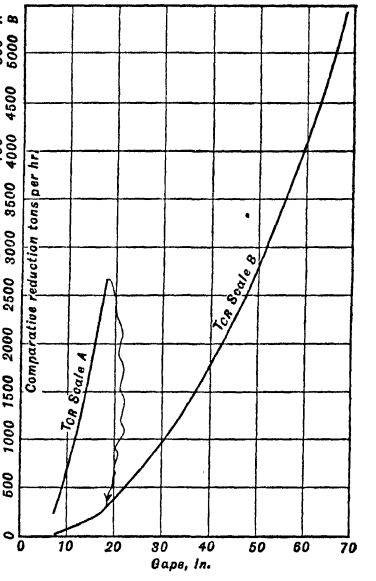

FIG. 12. Capacity of standard Blake jaw crushers.

Example: Assume that a crusher is wanted to break 50 t.p.h. of run-of-quarry granite that has passed through an 18-in. grizzly. It is desired to have a product that will pass a 4 1/2-in. grizzly.

The first step is to find a value for T_{Rc} in Eq. 9. Since the feed of the example is run-of-quarry granite, it may be taken to have a straight-line cumulative-direct square-mesh sizing curve, and since the shape factor is the same for feed and product, the percentage undersize will be (4.5/18)100 = 25%. This leaves 0.75 × 50 = 37.5 t.p.h. to be crushed, which is the value for T in Eq. 8. However, since Fig. 12 is for dry limestone fed at maximum rates ($K = 1.0$), in order to apply the curve to the stated case, the corresponding value for K for this case must be found.

From Table 3 the value of k for granite is, say, 0.85. On the assumption that the undersize will be scalped out before feeding, $k' = 1.0$. If it is assumed that the crusher will be fed from a surge bin by a pan feeder with push-button control, k'' may be taken as 0.75. Hence $K = 0.85 \times 1.0 \times 0.75 = 0.64$.

Then, by Eqs. 5, 6, 7, $R_{80} = 1.7[0.8(18) + 0.2(4)]/1.4(4) = 4.6$ (assuming that the crusher must be set at 4 in. to have the product pass a 4 1/2-in. grizzly and that the shape factor for granite is 1.7).

Then $T_{Rc} = (37.5 \times 4.6)/0.64 = 270$.

A crusher to receive feed of 18-in. maximum thickness with a shape factor of 1.7 should have a gape of 18/0.85 = 21.2 in. and a length of 1.7 × 18 = 30.6 in., both minimum, if sledging at the crusher is to be avoided. The nearest larger standard receiving opening is 24×36-in.

From Fig. 12, T_{Rc} for a 24×36-in. crusher is about 600. This crusher would have a capacity of 0.64(600 ÷ 4.6) = 83 t.p.h. of scalped granite with a 4-in. open set against the desired capacity of 37.5 t.p.h., but the excess capacity is dictated by reception requirements. With some sledging a 24×30-in. crusher with a $T_{Rc} = (30 \times 600)/(1.5 \times 24) = 495$ could be used so far as reception is concerned. The value of k'' would, however, fall to, say, 0.5, making $K = 0.42$. T_{Rc} would then be 410. This is within the capacity (495 comparative reduction tons per hr.) of the 24×30-in. crusher.

A number of formulas giving capacity directly have been proposed. ***Hersam*** developed, from the theoretical ribbon, a formula for capacity of standard Blake crushers which reduced to

$$T = \frac{54t(2s_c + t)wfn\delta K \cdot 10^{-5}}{G - s_c}$$

or, since f = approximately $2G$,

$$T = \frac{108t(2s_c + t)wGn\delta K \cdot 10^{-5}}{G - s_c}$$

where T = t.p.h.; n = r.p.m.; s_c = distance between jaws at bottom, when closed (close setting); t = throw; f = vertical depth of jaws; G = distance between jaws at the top when closed (substantially = width of receiving opening, or GAPE); δ = sp. gr. of rock; K is a factor varying with changing operating conditions but averaging from Hersam's experiments on laboratory-size crushers about 0.75; and w = length of receiving opening. All dimensions are to be taken in inches.

Michaelson (*PC*) uses a formula that is based on the assumption that crusher capacity is expressible in terms of a constant times gravity flow of a theoretical ribbon of solid rock through the throat at open setting. Using the symbols defined above, for rock of average specific gravity (δ = 2.65), this formula is: $T_{(\text{theoretical})} = 500w(s_c + t)/n$; and $T_{(\text{actual})} = 500wK'(s_c + t)/n$. Michaelson states that, based on actual operation, K' varies for straight jaw plates, from 0.18 to 0.30, and for nonchoking curved plates, from 0.32 to 0.45, with screened feeds. He recommends that for estimating purposes, where average irregularities in feeding occur, the lower figures of the ranges should be used. For unsized feeds increase the results by formula about 25%. The apparent anomaly involved in the assertion of the formula that capacity decreases with increase of speed follows from the implicit assumption that crusher breaking capacity is always in excess of discharge capacity. Flow will decrease, of course, under such an assumption, with increase in the number of interruptions per unit of time, *i.e.*, with r.p.m.

Flow formula for capacity. A purely empirical relationship between tons per hr. T and maximum area of discharge opening is: $T = 0.6ws_o$, where s_o and w are the open setting of the crusher, and the length of receiving opening respectively, both in inches. For small crushers the answer will be high; for large crushers, low.

It will be noted that both the Michaelson and the flow formulas indicate proportional increase in capacity with increase in set, whereas Hersam's formula indicates a more than proportionate increase. The latter relationship accords the more closely with experience, particularly at the ends of the range.

Comparison of direct capacity formulas with performance figures from Table 8 shows that no one of the formulas is safe for more than approximate estimation. The Hersam formula with K = 0.75

Table 7. Deviations of Blake breaker capacity formulas

Formula	Hersam		Michaelson	Flow
	K = 0.75	K = 0.4	K' = 0.2	
No. of mills in which actual value exceeded calculated value	7	19	4	19
Percentage excess of actual:				
Maximum *a*	84	92	27	59
Minimum *a*	18	10	19	4
Average *a*	37	42	24	29
No. of mills in which calculated value exceeded actual	25	13	28	13
Percentage excess of calculated:				
Maximum *a*	604	252	228	130
Minimum *a*	4	2	9	1
Average *a*	102	38	90	28
Average of all deviations of calculated from actual, percentage basis	−70 *b*	+10 *c*	−75 *b*	+6 *c*

a Actual taken as percentage base.
b Calculated in excess of actual.
c Actual in excess of calculated.

and the Michaelson formula with K' = 0.2 appear very likely to give values nearly twice as great as those met with in actual operations, whereas the Hersam, with K = 0.4, and the flow formulas preponderate somewhat on the conservative side. It must be borne in mind, however, that primary crushers are rarely worked to anything like full rated capacity and that experience proves that actual capacities are usually well beyond rated except on very tough ores. Also, capacity goes up roughly in inverse proportion to reduction ratio. When these considerations are applied to Table 7, the conclusion

indicated would seem to be to use Hersam with $K = 0.75$ or Michaelson with $K' = 0.2$ for relatively easy crushing rock, with small reduction ratio, when no excess capacity need be provided for; otherwise use Hersam with $K = 0.4$ or the flow formula.

Performances as reported from the mills are presented in Table 8.

Table 8. Performance of Blake-type jaw crushers

Plant	Hedley G. M. Co.	Suyoc	Combined Metals Red'n	U.S.S.R. & M. Midvale	Hedley G. M. Co.	Magma	Outokumpu	Crown Mines	Black Hawk
Machine									
Gape, in.	6	8	9	10	10	12	12	12	13
Length of receiving opening, in.	20	24	24	20	20	24	24	30	24
Open setting, in.	1.5	2	3	1.5	2.5	4	3	2.5	3
Speed, s.p.m.	220	198	.....	287	220	300	200	250	368
Motor, hp.	25	25	35	20	25	35	87	60	40
Operation									
Feed: Tons per hr.	25	15	100	10.5	25	75 *s*	60	22	20 to 25
Size, in. *a*	3 max.	.....	.....	10 max.	6 max.	10 max.	.....	.....	.....
Product, size, in. *a*	.....	.....	.....	.....	.....	.....	.....	.....	.....
Power consumed, hp.	.....	21.1	20	15	.....	.....	65	.....	20
Running time per day, hr. *ai*	8	16	8	24	8	6 to 7	17	16	14
Lost time, %, aver.	12 *d*	1	Negl.	3	12 *d*	Negl.	1	.....	0.2
Lubricant, lb. per shift	15	0.125	1	1.25	15	*ah*	2.2	.....	2
Wearing parts, life (days)									
Toggles	*h*	.....	720	180	*h*	120	150	.....	120
Toggle seats	*h*	.....	1,500	225	*h*	240	350	30	540 *f*
Jaw plates	120	*i*	1,000	82	106	180	60	75	30
Material	Mn	Mn	Mn	Mn	Mn	Mn	Mn	Mn	Mn
Check plates	120	.....	2,000	71	72	240	120	30	240
Material	Mn	Mn	Mn	CI	Mn	Mn	Mn	Mn	WCI
Changing plates, hr.	1	4	4	1 1/4	1	.....	20	4	1
Derived data									
80%-size: Feed *aj*	4.1 *g*	9.3 *l*	10.4 *l*	13.6 *g*	8.2 *g*	13.6 *g*	13.9 *l*	13.9 *l*	15.1 *l*
Product *aj*	1.5 *o*	2.0 *o*	3.0 *o*	1.5 *o*	2.5 *o*	4.0 *o*	3.0 *o*	2.5 *o*	3.0 *o*
Reduction ratios: R_A *b*	4	4	3	6.7	4	3	4	5	4.3
R_L *ab*	2.0 *w*	3.4 *u*	2.5 *u*	6.7 *w*	2.4 *w*	2.5 *w*	3.4 *u*	4.1 *u*	3.7 *u*
R_W *ac*	2.0 *w*	3.4 *u*	2.5 *u*	6.7 *w*	2.4 *w*	2.5 *w*	3.4 *u*	4.1 *u*	3.7 *u*
R_{80} *z*	2.7	4.6	3.5	9.1	3.3	3.4	4.6	5.6	5.0
Reduction tons per hr. *ak*	68	69	350	96	83	254	276	123	112
Reduction tons per hp-hr. *c*	.....	3.3	17.5	6.4	.....	.....	4.2	.....	5.6

Plant	Eagle-Picher, Ruby	St. Jos. Lead Balmat	Mountain City	Witherbee Sherman	Buffalo Ankerite	Premier	Treadwell Yukon	Engels	Hedley G. M. Co.
Machine									
Gape, in.	14	15	15	18	18	18	18	24	24
Length of receiving opening, in.	24	24	24	30	30	30	30	36	36
Open setting, in	2	2	2	3	4	.....	4	5.5	3.5
Speed, s.p.m.	246	.....	275	125 to 195	250	.....	250	260	150
Motor, hp.	.....	40	50	35	50	50	50	150	75
Operation									
Feed: Tons per hr.	30	50 *s*	55 *s*	75	50	42	65 *s*	42	100
Size, in. *a*	R.o.m.	10 max.	12 max.	.....	14 max.	12 max.	9 max.	.....	.....
Product, size, in. *a*	.....	*1*	.....	.....	.....	*g*	.....	.....	.....
Power consumed, hp.	32	26.1	.....	22.5	25 to 45	.....	16.5	92	40
Running time per day, hr. *ai*	18	16	7	9	16	.....	.....	16	8
Lost time, %, aver.	.....	.....	1	.....	5	.....	.....	1	12 *d*
Lubricant, lb. per shift	.....	.....	0.5	8	.....	.....	.....	2	32
Wearing parts, life (days)									
Toggles	.....	196 *j*	*f*	600	380	.....	.....	120 to 180 *t*	*h*
Toggle seats	90	283 *j*	*n*	1,200	380	.....	.....	120 to 180 *t*	*h*
Jaw plates	90	74 *j*	*n, k*	150	*q*	*r*	*e*	720	100
Material	Mn	Mn	Mn	Mn	Mn	Mn	Mn	Mn	Mn
Check plates	.....	.....	*f*	300	.....	.....	.....	>1,080	70
Material	CI	.....	Mn	CI	Mn	.....	.....	Mn	Mn
Changing plates, hr.	1	.....	8	4	4	.....	.....	24 to 36	2
Derived data									
80%-size: Feed *aj*	16.2 *m*	13.6 *g*	16.3 *g*	20.9 *l*	19.0 *g*	16.3 *g*	12.2 *g*	27.8 *l*	27.8 *l*
Product *aj*	2.0 *o*	2.3 *z*	2.0 *o*	3.0 *o*	4.0 *o*	4.1 *z*	4.0 *o*	5.5 *o*	3.5 *o*
Reduction ratios: R_A *b*	7	7.5	6.7	6	4.5	.....	4.5	4.4	6.9
R_L *ab*	6.0 *u*	5.7 *w*	6.0 *w*	5.1 *u*	3.5 *w*	3.7 *w*	2.2 *w*	3.7 *u*	5.8 *u*
R_W *ac*	6.0 *u*	5.0 *w*	6.0 *w*	5.1 *u*	3.5 *w*	.....	2.2 *w*	3.7 *u*	5.8 *u*
R_{80} *z*	8.1	5.9	8.2	7.0	4.8	4.0	3.0	5.0	7.9
Reduction tons per hr. *ak*	243	295	452	525	240	168	195	210	790
Reduction tons per hp-hr. *c*	7.6	11.3	.....	23.3	6.9	.....	11.8	2.3	19.7

Table 8. Performance of Blake-type jaw crushers—*Continued*

Plant	Witherbee Sherman	Britannia	Dome	El Potosi	Kelowna	Sherritt-Gordon	Cons. M. & S. Co.	Aldermac	Britannia
Machine									
Gape, in.	24	24	24	24	24	30	36	36	36
Length of receiving opening, in.	36	36	36	36	36	42	42	48	48
Open setting, in.	4	6	4	4	5	5	6	3.5	6
Speed, s.p.m.	233	.....	240	225	165	185	.....	160	178
Motor, hp.	100	150	75	125	75	100	125	125	150
Operation									
Feed: Tons per hr.	100	200	100 *s*	150 *s*	75	140	300	100 *x*	300
Size, in. *a*	24 max.	.....	.....	.....	.....	.....	R.o.m.	16 max.	.....
Product, size, in. *a*	.....	.....	.....	.....	*v*	.....	.....	.....	.....
Power consumed, hp.	.....	60	60	78	60	.....	.....	*y*	.....
Running time per day, hr. *ai*	18	.....	16	16	5	16	24	11 1/2	24
Lost time, %, aver.	.....	.....	.....	.....	.....	.....	.....	3	.....
Lubricant, lb. per shift	4	.....	3	1.4	2	.....	.....	2	.....
Wearing parts, life (days)									
Toggles	300	.....	120	360	.....	270	180	360	.....
Toggle seats	365	.....	120	540	400	270	360	300	.....
Jaw plates	300	.....	225	450	*aa*	240	300	100	60
Material	Mn	.....	Mn	Mn	Mn	Mn	Mn	Mn	Mn
Cheek plates	300	.....	120	11 yr.	700	700	720	.....	.....
Material	Mn	.....	Mn	Mn	Mn	Mn	Mn	Mn	Mn
Changing plates, hr.	3	6	8	2	1 1/2	8	8	6	6
Derived data									
80%-size: Feed *aj*	32.6 *g*	27.8 *l*	27.8 *l*	27.8 *l*	27.8 *l*	34.8 *l*	41.8 *m*	21.8 *g*	41.8 *l*
Product *aj*	4.0 *o*	6.0 *o*	4.0 *o*	4.0 *o*	5.0 *o*	5.0 *o*	3.5 *o*	6.0 *o*	6.0 *o*
Reduction ratios: R_A *b*	6	4	6	6	4.8	6	6	10.3	6
R_L *ab*	6.0 *w*	3.4 *u*	5.1 *u*	5.1 *u*	4.1 *u*	5.1 *u*	5.1 *u*	4.6 *w*	5.1 *u*
R_W *ac*	6.0 *w*	3.4 *u*	5.1 *u*	5.1 *u*	4.1 *u*	5.1 *u*	5.1 *u*	4.6 *w*	5.1 *u*
R_{80} *z*	8.2	4.6	7.0	7.0	5.6	7.0	7.0	6.2	7.0
Reduction tons per hr. *ak*	820	920	700	1,050	420	980	2,100	620	2,100
Reduction tons per hp-hr. *c*	.....	15.3	11.7	13.5	7.0	.....	.....	5.5	.....

Plant	Falconbridge	Homestake	McIntyre Porcupine	Noranda	Pamour Porcupine	Chino	Copper Queen	Nev. Cons., McGill
Machine								
Gape, in.	36	36	36	36	36	66	66	66
Length of receiving opening, in.	48	48	48	48	48	84	84	84
Open setting, in.	6	6	8	8	5	8	10	11
Speed, s.p.m.	149	196	140	175	.....	90	.....	90
Motor, hp.	125	75	150	100	150	300	250	250
Operation								
Feed: Tons per hr.	180	200	170	300 to 350	160 to 200	1,000 *s*	2,500 *s*	.....
Size, in. *a*	R.o.m.	.....	R.o.m.	R.o.m.	.....	60 max.	20 max.	.....
Product, size, in. *a*	.....	9 max.	.....	.....	.....	.....	.....	.....
Power consumed, hp.	.....	.....	80	100	.....	250	130	120
Running time per day, hr. *ai*	12	8	.....	8 to 18	10	16	2.9	20
Lost time, %, aver.	.....	Negl.	.....	.....	.....	.....	.....	.....
Lubricant, lb. per shift	.....	8	.....	.....	.....	25	.....	20
Wearing parts, life (days)								
Toggles	*f*	45	3 yr.	.....	1 to 2 yr.	.....	.....	1,500 *f*
Toggle seats	*f*	300	3 yr.	.....	1 to 2 yr.	.....	.....	1,500 *f*
Jaw plates	*f*	700	540	*ad*	*ae*	.....	.....	*ag*
Material	Mn	Mn	Mn	Mn	Mn	Mn	Mn	Mn
Cheek plates	*f*	7 yr.	>7 yr.	.....	*af*	.....	.....	*f*
Material	Mn	Mn	Mn	Mn	Mn	Mn	Mn	Mn
Changing plates, hr.	24	8	6	.....	4 to 6	.....	.....	8
Derived data								
80%-size: Feed *aj*	41.8 *m*	41.8 *l*	41.8 *m*	41.8 *m*	41.8 *l*	82 *g*	27.2 *g*	75.8 *l*
Product *aj*	6.0 *o*	5.4 *p*	8.0 *o*	8.0 *o*	5.0 *o*	8.0 *o*	10.0 *o*	11.0 *o*
Reduction ratios: R_A *b*	6	6	4.5	4.5	7.2	8.2	6.6	6
R_L *ab*	5.1 *u*	5.1 *u*	3.8 *u*	3.8 *u*	6.1 *u*	7.5 *w*	2.0 *w*	5.1 *u*
R_W *ac*	5.1 *u*	5.1 *u*	3.8 *u*	3.8 *u*	6.1 *u*	7.5 *w*	2.0 *w*	5.1 *u*
R_{80} *z*	7.0	7.7	5.2	5.2	8.4	10.2	2.7	6.9
Reduction tons per hr. *ak*	1,260	1,540	885	1,690	1,510	10,200	6,750	.....
Reduction tons per hp-hr. *c*	.....	.....	11.0	16.9	.....	40.8	51.9	.....

a Numbers in italics refer to columns in Table 15*a*.
b Gape divided by set.
c See ***Efficiency***, p. 17.
d For causes not chargeable to crusher.
e Total replacement in 12 mo., 1 fixed-jaw plate.
f Original still in service.
g 0.8 × max. × F_s = 1.36 max.
h Several years.
l Stationary 74 days, swing 71 days.
j Toggles, 95,100 tons; seats, 285,400 tons; jaw plates, 31,000 tons.
k Nonchoking type.
l 0.85*G* × 0.8F_s = 1.16*G*, on assumption that maximum receivable size is fed.
m 1.16*G*.

n Toggle seats, 3,100 operating hr.; lower jaw plates, 1,550; upper plates still in use.
o $0.60F_{s_e} = 1.02s_e = s_e$ (see Fig. 15).
p Assuming "max." denotes width, applying Fig. 15.
q Curved swing plate, 383 days, 259,211 tons; stationary plate, 40 days, 26,000 tons.
r Swing jaw plates 39,500 tons; fixed, 22,200 tons.
s Scalped.
t Removable ends.
u If $t_f = 0.85G$ and $t_p = s_e$.
v 18% <3/4-in.
w Assuming the "maximum size" reported is that of a grizzly passing the feed.
x Only partly loaded.
y 90% with full load.
z See Eq. 4.
aa Swing plate 330 days, fixed 240 days.
ab See Eq. 1.
ac See Eq. 3.
ad Swing, 390,000 tons; fixed, 719,000 tons.
ae 0.025 lb. per ton or 250,000 tons per set.
af Top, 2 to 3 yr.; bottom, 200 days.
ag Lower fixed 750, lower swing 178 @ 24-hr. days.
ah 5 lb. grease and 1 qt. black gear oil.
ai Nominal.
aj See p. 10.
ak Eq. 8.

Efficiency of crushing machines is customarily stated as hp-hr. (or kw-hr.) per ton of product, or as the inverse, tons of product per hp-hr. If, however, these units are investigated, as, for example, by examination of Table 1, it becomes apparent immediately that, if the table is in any way reliable with respect to production through different open settings, either the machine cannot be made to draw the same amounts of power with different settings—which is ridiculous on the face of it, since the energy transmission chain does not change—or the tons per hp-hr. must change with each change in setting, if the machine is constantly loaded to capacity and the power draft remains substantially constant. This latter is, of course, the fact. The work constant which corresponds to a constant energy input (power draft) at full load is the product of weight crushed by diametral reduction. This is the reduction ton. The comparative reduction tons per hr. for the various crushers of Table 1, with different settings, are substantially constant. REDUCTION TONS PER HP-HR. is obtained by dividing reduction tons per hr. by the hp. consumed. It is a reasonably true measure of the practical efficiency of the crusher in reducing limiting size, which is the function of primary and intermediate crushing machines.

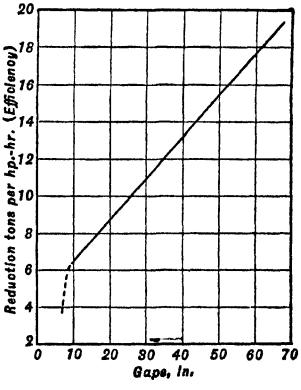

FIG. 13. Efficiency of standard Blake-type jaw crushers.

Efficiencies of jaw crushers increase with size of crusher, as is to be expected from the increases in mechanical advantage that occur with increase in size of machine. Performance data are not sufficiently complete to supply an accurate basis for reduction tons per hp-hr. for the various sizes. Fig. 13, plotted from Fig. 12 on the assumption that full-load power draft is 85% of installed horsepower, indicates efficiencies almost certainly too low for the machines larger than 18-in. gape, if they are worked through their full range of reduction ability. The figures in Table 8, on the other hand, are almost certainly too high for most of the crushers, since they are, in large measure, based on the assumption that the crushers are working through their full reduction range and that the reported feed rate is sufficient to keep them continuously busy. If the first assumption is untrue the crusher is credited with too much reduction, whereas if the second is erroneous not enough power is charged, since the crusher draws 50 to 70% of its full-load draft while idling (Fig. 5, and *99 J 399*). Both errors tend to cause the efficiencies calculated in Table 8 to be too high. The truth, for most crushers, probably lies between the values of Fig. 13 and those in Table 8.

Fall through the machine proper is about twice the gape. To this must be added the additional drop necessary to get feed to the machine and product away. If chutes are used, they may not safely be set at less than 45°.

CALUMET & HECLA (*100 J 11*) uses a special crusher with 3-ft. 6-in. fall for 24-in. gape and 4-in. set. This has been found a great aid in freeing the crusher when mass copper clogs the jaws.

Lost time. The average percentage of lost time in the mills due to causes chargeable to the jaw crushers themselves, such as repairs and renewals, clogging and its attendant difficulties, is less than 1%. Renewal of jaw and cheek plates and rebabbitting of bearings are the principal causes of lost time. When the crusher is planned to run one or two shifts per day only, as is done in a majority of mills, renewals and repairs are handled in the off shifts. In such cases substantially no delay is chargeable to the jaw crushers in most plants.

Attendance. The usual practice is a man to each machine. Rarely one man attends two machines. The principal duty of the attendant is to regulate the feed rate and to pick powder, steel, and waste. When the crusher is fed by dumping carloads or skip-loads of rock directly into the jaws no picking is possible, but the attendant must see that material does not bridge, or he must break up such jams as occur.

Crane service. See Sec. 20, Art. 12, for general discussion. Less than 50% of mills reporting had such service, but most large crushers are so served.

Feeding jaw crushers. Jaw crushers should be fed regularly and up to capacity, if possible. Maximum size of feed is theoretically a parallelopipedon of thickness (minimum dimension) slightly less than the gape, width slightly less than the length of receiving opening, and any length. Practically the particle thickness should not exceed 85% of the gape, and if its length is greater than the length of receiving opening, bridging is likely to occur, even with controlled feeding. Crushers may be buried when no feed particle is of greater length than the gape; otherwise burying may cause bridging; this necessitates laborious digging out in order to get the flow of rock started again. Some form of positive feeder with ready start-and-stop and speed control (Sec. 18) is an economy. Fig. 14 shows a power-actuated hook for removing lumps from between the crusher jaws. Tongs may be hung on the same power hook for lifting lumps clear of the crusher. Ample guard should be provided to prevent pieces of rock from dropping into the actuating mechanism, or serious accidents may occur.

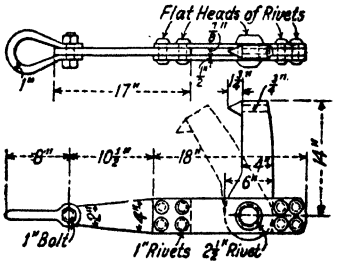

FIG. 14. Hook for jaw-crusher feeding.

Breaking point is provided in most coarse crushers to take care of excessive loads caused by introduction of material, such as metal, that cannot be handled. In Blake breakers the usual breaking point is one of the toggles (Fig. 3). Traylor builds a pitman in which the lifting force is applied to the rocker through a punch set in the pitman and a mild-steel punch-plate set over a die in the rocker. Excessive pressure causes the punch to perforate the plate whereupon, although the pitman continues to rise and fall, no motion or pressure is transmitted to the swing jaw. The device is reset by jacking up the toggles and moving the pitman until the punch-plate can be moved to a new position. In crushers not specially provided, the usual effect of a stoppage under full working load with power on is either to crush the babbitt of the pitman or to throw the belt or both. If the belt does not throw off and there is not a satisfactory overload circuit breaker on the driving motor, a burned-out motor will result. Most large modern installations provide an overload circuit breaker on the motor, which, in case of an overdraft of power due to clogging, cuts off the power and stops the motor.

Size of product varies somewhat according to the toughness of feed and to its sizing test. Operating data are not plentiful, but the best data available (*RI 3377, 3380, 3390;* Allis-Chalmers, *PC; CU*) indicate that the following rules are fairly dependable. The product of a crusher with straight jaw plates will all pass a square-mesh testing sieve of an aperture equal to 1.7 to 2 times the open setting; 65% to 85% of the product will pass a similar screen of aperture equal to the open setting, the lower percentage for tough or slabby rock, the higher for relatively friable rock that breaks granularly; about 40% of the product of a crusher fed with run-of-mine or run-of-quarry product approximating straight-line size distribution will pass a square-mesh testing sieve of aperture equal to half the open setting, this percentage falling to 25 to 35% with sized feed. The size showing maximum weight is always at or near the open setting. Fig. 15 is reasonably safe for estimates of size distribution in crusher product under the usual conditions there presented.

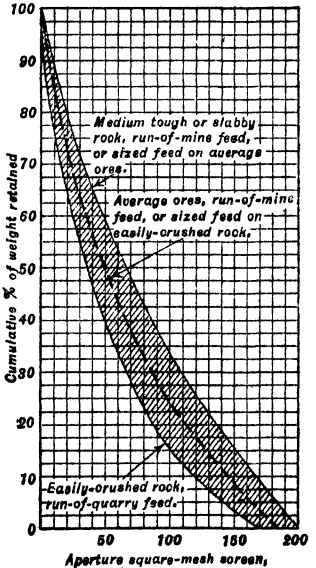

FIG. 15. Size distribution in jaw-crusher product.

Shepard (*RI 3380*) found, in a careful test with a 60×84-in. crusher with an open setting of 7 1/2 in. in granite, 1.25% less <1/8-in. material was produced when the <6-in. material was screened out ahead

of the crusher than when the crusher was fed with run-of-quarry rock. Experience at COPPER RANGE (*95 J 947*) is that primary jaw-crusher product (<4-in.) is more even-sized if fines are not screened out ahead of the crusher, since slabs do not pass through so readily under this circumstance.

Operating cost of jaw crushers is best estimated from the data given on power consumption, attendance, and wear. These items make up about 90% of the total cost. For rough estimates, 8 to 10¢ per ton for small crushers to 2 to 3¢ for large are outside figures.

Horizontal-pitman crusher (Fig. 16) comprises the usual swing and fixed jaws in the usual positions in the main frame, but the drive shaft *B* actuating the short horizontal pitman *C* is carried near the base of the frame, and the pitman bears directly against the shimmed seat *D* in the lower end of the swing jaw. This construction lowers the height of the main frame and, together with the lessening of the reciprocating weight and of the eccentricity required for a given throw, should serve to decrease vibration. On the other hand, the force-multiplying effect of the usual toggle mechanism is lost so that much greater loads are brought onto the eccentric bearing itself. This crusher is run somewhat faster than the Blake type. It is made up to 15×24-in. size and at that size, for a given frame, metal and type of construction are somewhat lighter than the Blake.

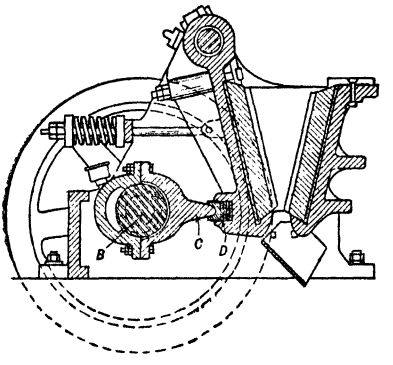

FIG. 16. Horizontal-pitman jaw crusher.

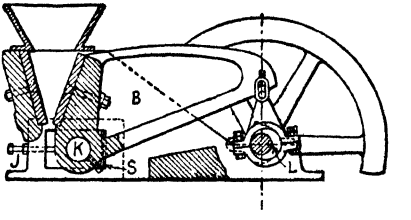

FIG. 17. Dodge jaw crusher.

Dodge breaker (Fig. 17) differs essentially from the Blake in that the movable jaw is pivoted at the bottom. In the original Dodge type shown in the figure the movable jaw was mounted on the short arm of a lever whose fulcrum was the swing-jaw shaft *K*, and the long arm *B* was actuated by an eccentric *L* on the drive shaft. Adjustment of the size of discharge was effected by shims *S*. In later designs toggles and pitman have been used to actuate the swing jaw, as in the Blake type; and the only difference between the two types becomes the essential and important one of the place at which the swing jaw is pivoted. Sizes and essential operating data of Dodge breakers are given in Table 9.

Table 9. Operating data for Dodge crushers

Size of receiving opening, in.	Weight, pounds	Capacity, tons per hour				Revolutions per minute	Horsepower
		Size, inch	Tons	Size, inches	Tons		
4×6	1,100	0.75	0.5	.....	.....	300	3
6×9	3,200	0.75	1.5 to 2.5	1.5	3 to 5	250 to 300	4 to 6
7×11	5,500	.....	.....	1.5	6 to 8	250 to 300	7
8×12	5,900	0.75	3 to 5	1.5	7 to 10	250 to 300	10
11×15	14,000	0.75	6 to 8	1.5	10 to 20	250 to 300	15

The Dodge breaker, owing to the manner of pivoting the swing jaw, is forced to do its greatest work at a point on the working end of the lever farthest from the fulcrum. This makes it most uneconomical in the use of power. The capacity is low as compared with that of the Blake by reason of the relatively small movement at the throat. It has the further disadvantage that there is difficulty in nipping the material being crushed and as a result lumps tend to fly out of the jaws. Sticky ores tend to clog it.

The Dodge-type breaker is made in smaller sizes than the Blake and is, therefore, suitable for small plants where power consumption is so low as to be unimportant and where fine size and uniformity of product are of distinct advantage. Attempts to operate with setting less than 3/4 in. will, however, usually result in mechanical trouble. Many of these crushers are sold sectionalized for small mills in isolated regions with difficult transport.

Single-toggle jaw crusher (Fig. 18) has the swing jaw hung on an eccentric *a* on the main drive shaft. The lower end of the swing jaw *b* rests against the single toggle *c*. The swing jaw thus receives two kinds of actuation, *viz.*, backward-and-forward and up-and-down from the continuous-wedge action of the eccentric, and a superimposed fore-and-back movement from the toggle.

In the machine pictured, with clockwise drive, starting with the long radius of the eccentric horizontal and to the right, the entire swing jaw starts downward and away from the fixed jaw. When the long

arm of the eccentric reaches a position substantially in the longitudinal axis of the swing jaw, the lower end of the latter has reached its position of maximum opening while the upper end is approaching the half-point of its backward motion. During this part (substantially one-quarter) of a revolution, no crushing is being done. From this point until the long arm reaches horizontal to the left, the lower part of the swing jaw is crushing and the upper part opening farther. Further rotation starts closure and crushing by the upper part of the jaw, at a slowly accelerating rate, and continues closure and crushing by the lower part, at a decelerating rate, until the long arm is again in the axis of the swing jaw, when approach and crushing in the lower zone cease. Further rotation now starts opening at the throat, as approach at the mouth passes through its maximum rate with the long arm vertically upward. From this point to the beginning of the cycle, approach at the mouth is at a decreasing rate and opening at the throat is accelerating for most of the time. Thus idle time is held to less than 1/5 revolution; the entire jaw is crushing during only about 1/5 of the time, and during this time not at a maximum rate over the whole jaw; while during the other 3/5 first one and then the other half only of the jaw is working. The effect is to shorten the period of maximum draft on the stored energy of the flywheels, tending to maintain speed and capacity and to decrease power consumption. Performances (see Table 11) confirm this analysis.

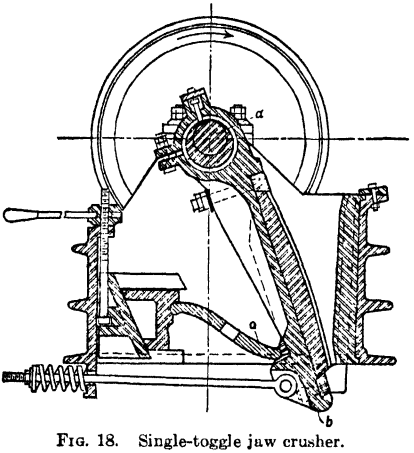

FIG. 18. Single-toggle jaw crusher.

The design of this crusher eliminates the pitman, with no corresponding increase in size or weight of the swing jaw. The crusher is limited in size, however, by the tremendous pressure imposed on the eccentric. This pressure increases, with an eccentric of fixed throw, with increase in horizontal motion at the throat. The eccentric is of roller-bearing type in the best crushers, but even with this construction 24×36-in. is the largest machine yet listed (1939).

When fitted with curved jaw plates, a 10×24-in. single-toggle crusher can be set to 1/4-in. minimum. In general, on screened nonslabby feeds, this type of crusher yields a product of which upward of 90% will pass a screen aperture equal to the open setting and 50% the closed setting. It is particularly useful either as an intermediate crusher or as a primary in a small plant working a one-step reduction to a reasonably fine ball-mill feed. By decreasing the angularity of the toggle with the horizontal (lowering the rear seat) the change in throat opening per revolution may be reduced to a minimum approaching the zero change of the Dodge, while still maintaining a lively movement tending to accelerate discharge.

Table 10, composited from manufacturers' catalogues, shows sizes available.

Table 10. Single-toggle jaw crusher (*Data from manufacturers' catalogues*)

Size of receiving opening, inches	Approximate capacity in tons per hour with closed setting stated, in.								R.p.m.	Hp.	Weight, lb.
	Size	Tons	Size	Tons	Size	Tons	Size	Tons			
5×6	3/4	1 to 1.5	1	1.5 to 2	1 1/2	2 to 2.5	....	.....	350	3	820
7×10	3/4	1.5 to 2	1	2 to 2.5	1 1/2	2.5 to 3	....	.....	325	7.5	1,780
8×10	3/4	1.5 to 2	1	2 to 2.5	1 1/2	2.5 to 3	....	.....	325	10	2,170
8×12	3/4	2 to 3	1	3 to 4.5	1 1/2	4.5 to 6	2 1/2	5.5 to 7	325	10	3,090
9×16	1/2	3 to 4	3/4	5 to 7.5	1	6 to 8	1 1/2	7 to 12	250 to 420	8 to 15	4,900 to 5,400
9×18	1/4	4	1/2	8	1	16	1 1/2	24	250 to 300	15	8,500
9×20	3/4	7 to 9.5	1	8 to 12	1 1/2	9 to 13	2 1/2	13 to 17.5	225	20	5,800
9×24	3/4	8 to 12.5	1	10 to 14.5	1 1/2	12 to 17.5	2 1/2	12 to 26	225	25	7,850
9×30	3/4	10 to 15	1	12 to 18	1 1/2	16 to 28	2 1/2	22 to 30	225 to 350	15 to 30	10,000
9×36	3/4	12 to 18	1	15 to 24	1 1/2	22 to 36	2 1/2	28 to 36	225 to 350	20 to 40	11,500
10×21	1/2	4 to 5	3/4	7 to 9	1	9 to 11	1 1/2	13 to 16	420	12 to 20	6,350
10×24	1/4	6	1/2	12	3/4	18	1	24	250 to 300	25	11,500
13×24	1 1/2	20 to 25	2	22 to 27	2 1/2	25 to 30	3	28 to 35	350	20 to 30	19,700
15×36	1 1/2	30 to 38	2	33 to 40	2 1/2	38 to 45	3	42 to 52	275	50 to 60	21,500
18×30	2 1/2	30 to 40	3	35 to 45	3 1/2	45 to 55	.....	.....	275	50 to 60	20,250
24×36	3 1/2	60 to 70	4	70 to 80	5	80 to 90	6	90 to 100	250	75 to 100	35,000

Comparison of jaw crushers. Table 11, supplied by Allis-Chalmers (*PC*), compares the performances of four crushers of their own make. Jaw-plate wear is greatest in the single-toggle type, whereas mechanical difficulties are greatest with the Dodge, if it is worked to capacity.

Table 11. Comparison of jaw crushers

Crusher	Weight, lb.	R.p.m.	Hp.	Set, in., Open	Set, in., Closed	Size product, % <1-in.	Tons per hr.	Relative price	Relative price per ton <1-in. product
9×18-in. single-toggle with curved plates	7,000	275	15	1	5/8	90	12	1.18	0.56
9×15-in. Blake, straight plates	12,000	250 to 275	10	1	1/2	85	6	1.00	1.00
9×15-in. Blake, curved plates	12,100	250 to 275	10	1	1/2	90	9	1.02	0.64
11×15-in. Dodge, straight plates	13,500	200	15	3/4	3/4	90	4	1.08	1.53

3. GYRATORY CRUSHERS

The gyratory crusher is a reciprocating pressure-type breaker, loading particles gradually, principally as short columns (occasional slabs are loaded as beams), and having unhindered gravity discharge. It consists essentially of a fixed crushing surface in the form of a frustum of an inverted cone around the axis of which gyrates a movable crushing surface, which has the shape of a conical frustum in erect position. The material to be broken is fed into the downward-converging annular space between these two crushing surfaces, it is crushed when the surfaces approach, and the crushed material falls through when they recede. It may be looked upon as a jaw crusher wound around a vertical axis through the midpoint of the swing-jaw shaft. The machine has been built in three types, known respectively as the suspended-spindle type, the supported-spindle type, and the fixed-spindle type. The first is the best known and most used; the second is fast disappearing in the old form, but new forms appear from time to time (see Art. 6); the third is relatively a newcomer.

Sizes of gyratory crushers as now sold are indicated by stating the gape of the receiving opening in inches. Total length of opening, measured along the outer rim, is approximately 8 to 10 times the gape in sizes below 26-in. and 6 1/2 to 7 1/2 times in the larger sizes. In the past, suspended- and supported-spindle crushers were rated by numbers with a letter suffix, *e.g.*, 7 1/2*K*. The suffix K indicated a suspended spindle, D a supported spindle; the numbers were roughly half the gape in inches.

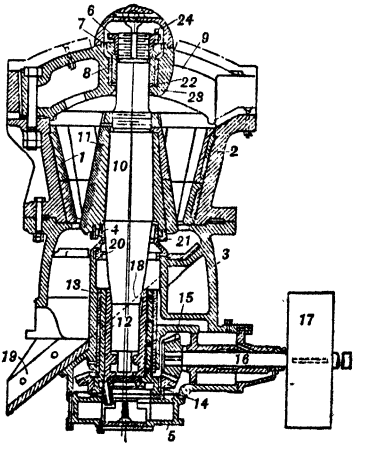

FIG. 19. Short-shaft suspended-spindle gyratory crusher.

Suspended-spindle gyratory is built in two forms, known respectively as the long-shaft and short-shaft types. The short-shaft machine (Fig. 19) is the modern form. It is characterized by the fact that the eccentric is situated above the bevel wheel. The main frame carrying the concaves *1* is made up of the upper shell *2* and the lower shell *3*, rigidly bolted together. The upper shell carries the concaves and the two-armed spider *9*. The spindle *10*, carrying the breaking head *11*, is suspended at its upper end from the spider. The lower end of the spindle passes through the eccentric sleeve *12*, which runs in a vertical bearing *13* cast integral in the lower shell. Rotation of the eccentric sleeve is accomplished by means of bevel gear *14*, bevel pinion *15*, shaft *16*, and pulley *17*, driven by some form of belt from the source of power. The axis of the spindle thus suspended and driven describes the surface of an acute cone the apex of which is within the spider; the amplitude of the base is determined by the eccentricity of the sleeve *12*. At the same time, the spindle, being free to rotate around its own axis, rotates slowly—in the same direction as

the travel of the spindle when the crusher is empty, in the reverse direction when the crusher is working.

Rock to be crushed is fed into the converging space between the concaves and the breaking head. The pieces fall as far as their size allows, then seat against the crushing surfaces, where they are broken by the movement of the mantle toward the concaves. As the mantle recedes the fragments fall to a new seat and are again crushed as the mantle approaches the concaves at the point where they are resting. When material is finally broken so that it will pass the lowest annular space between the breaking head and concaves, it falls onto the annular sloping diaphragm *18* in the lower shell and discharges through spout *19*. Dust and grit are kept away from the gears and eccentric bearing by a dust seal comprising the cap *20*, bolted to the upward extension of the eccentric bearing, the dust collar *21* bolted to the under side of the mantle, and a packing ring *4*, unattached, which closes the gap between *20* and *21*. Similar arrangements designed to make a dustproof joint between the bottom of the breaking head and the top of the hollow central column are used in other makes (Fig. 20). The bottom plate *5* supports the weight of the eccentric and bevel wheel but takes none of the crushing strain. The eccentric is made of larger bearing area and is provided with a more elaborate lubrication system than was necessary in the older long-shaft machine (Fig. 21), in order to take care of the greater reaction pressures induced by shortening the power arm of the crushing lever. The shorter spindle decreases spindle breakage and lessens the clear height necessary above the machine. Access to the gear chamber is by removable doors in the bottom shell. Access to the eccentric bearing is gained by lowering the bottom plate.

Shell is built up of heavy castings which may be of iron, high-test iron, or cast steel. The joint between the upper and lower portions is a tapered fit and is heavily flanged. The bolt holes in these flanges are drilled in such a manner that the upper shell may be turned on the lower shell, if desired. The lower shell is heavily flanged at the bottom to form a base for supporting the crusher and for bolting to foundations. All parts of the shell that are subject to wear are lined with replaceable parts. The bottom shell should be so cast that the space between the bottom of the breaking head and concaves and the highest point of the diaphragm or annular chute is as large as possible, in order to prevent clogging by slabs of rock. Discharge chute on the opposite side from the drive, as shown in Fig. 19, is known as STANDARD ARRANGEMENT. RIGHT-ANGLE DISCHARGE, with the center line of the discharge chute in a plane at right angles to the axis of the driving shaft, is furnished if desired. With such discharge, a RIGHT-HAND CRUSHER is one in which the driving pulley is on the right when the discharge chute is faced; a LEFT-HAND CRUSHER is the reverse of this. Normally the hand must be specified, but in some makes the bottom shell is provided with seats for the countershaft bearing which permit change to any hand in the field.

Bottom plate in long-shaft crushers is made of cast iron, heavily ribbed, in order to furnish a strong and rigid bearing for the gear-driven eccentric sleeve. It is so bolted to the flange of the lower shell as to allow it to be dropped in the foundations by means of long threaded bolts depending from the lower half of the shell. A track is provided in the foundation on which the bottom plate may be slid out to one side after dropping, to facilitate work on the gear and eccentric.

Hopper or spider rim is made of cast iron or cast steel, heavily ribbed. In larger crushers it is sectionalized so that only the inner ring need be removed in order to allow removal of the spider. In most crushers the hopper is so arranged that it is not necessary to remove it in order to remove the concaves; in others the inner section of the hopper projects over the concaves, the argument for such construction being that it lessens bridging of rock above the crushing zone. In large crushers the hopper is lined, usually with cast-steel sectional plates.

Spider is made of cast iron in small crushers and of high-test cast iron or cast steel in the largest crushers. Since it carries the fulcrum of the crushing lever and is two-armed only, it must be very heavy and must be strongly fastened to the spider rim in order to prevent any weaving or breakage under lateral stresses. It should be so shaped that it forms an arch over the receiving opening of such height that the largest piece of rock that can enter the receiving opening can pass under it freely, if bridging and clogging of the crusher are to be prevented. In some crushers the base of the spider is a continuous ring forming the inner circle of the hopper. It has been claimed that such construction results in more breakage than when the spider is not an integral part of the hopper (*113 P 556*). Michaelson (*PC*) asserts that such failure is largely the after-result of casting strains and that by using an extra-heavy slow-cooled rim or by casting the rim split and thereafter fastening by shrink bolts before machining, the advantage of integral connection of spider to rim over a bolted connection may be obtained safely. The shorter spindle decreases spindle breakage and lessens the clear height necessary above the machine. Sometimes the spider arms are broadened out at the ends to give a large base for secure bolting to the upper shell. Spider arms should be protected by wearing shields unless the crusher is so fed that only occasional particles of rock come into contact with them.

Spindle or main shaft is the lever by means of which the crushing force transmitted through the eccentric bearing is applied to the rock. It must, therefore, be of great strength and capable of withstanding a continuous succession of shock loads. It is made in most crushers of hammered, open-hearth steel, specially heat-treated, turned, and polished. For extremely heavy work it may be made of special alloy steel. It is usually made to taper toward both ends, thus giving maximum cross-section and strength at the point of greatest stress. One maker hollow-bores the spindle in order to remove any defects or cracks due to the original forging that might work outward. Threads are cut at the upper end to accommodate the adjusting nut and also at a place near the upper end to accommodate the

nuts that lock the mantle. Key seats may be cut under the breaking head and adjusting nut, but usually the breaking head is held pressed down tightly on its taper by self-tightening head nuts similar to those used in tightening the mantle on the head (see p. 26).

Suspension bearing is of different detail in different makes of crushers, although of the same principle in all. The underlying idea is to bring the suspending surface as near to the point of no movement as possible. In the suspension bearing shown in Fig. 19 a split-steel nut (*6*) is turned to a downward taper on the outer surface and fits into the tapered upper portion of sleeve (*7*), which in turn is enclosed loosely within the spider bushing (*8*) and rests on the wearing ring (*22*), seated in the spider head (*23*). The weight of the spindle and breaking head and the downward pull thereon due to crushing clamp the split suspending nut (*6*) ever more tightly into the threads on the spindle. Jack nuts (*24*) are provided for backing away, after which the nut may be turned for vertical adjustment of the spindle. In one make of crusher the wearing ring is suspended on a nest of heavy springs so that the breaking head can be forced down by unbreakable material, with possible discharge thereof.

Eccentric sleeve transmits the crushing force to the lower end of the spindle. It therefore works under high pressures and should have as large a bearing surface as possible. In most makes the eccentric is babbitted inside and out with special hard babbitt; in one make, bronze bushings are substituted for babbitt. The inner surface of the central sleeve in the lower shell, which surrounds the eccentric sleeve, is bushed. The gear wheel is keyed or riveted to the eccentric sleeve. The eccentric sleeve rides on a wearing ring of brass, bronze, or steel. In most crushers the eccentric sleeve has cylindrical faces, but in one make the inner face is spherical and engages a spherical ball on the spindle. The argument in favor of this construction is that it is self-aligning and affords a greater area of contact than the cylindrical eccentric. A gear-type oil pump (Fig. 20) forces oil through passages as indicated by the arrows.

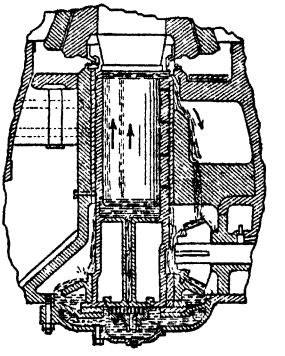

FIG. 20. Lubrication system for gyratory crusher.

Gears are made of cast or forced steel with cut teeth. Provision is made, by varying the thickness of the wearing rings or by adjustment of the countershaft bearing, for taking up a small amount of wear in gear and pinion. Fitting the main gear down over the head of the eccentric sleeve and keying it thereto would seem to be better construction than that in which the gear is riveted onto the eccentric.

One manufacturer makes a gearless crusher in which the usual gearing is replaced by a horizontal pulley or by a built-in vertical-type synchronous motor. This arrangement allows the spindle to be driven at a higher speed than with gears, which is an advantage in secondary-crushing service. (See p. 40.)

Countershaft bearing is made extra long and is cast as an integral part of the bottom shell or may be made adjustable in order to take up wear on gear and pinion. Modern practice inclines toward antifriction roller bearings. An outboard bearing of the usual ball-and-socket type is furnished, except where Tex-rope drive is used.

Drive pulley in older crushers was loose on the shaft and transmitted power through pins to an auxiliary hub keyed to the shaft. The purpose of this arrangement was to furnish a breaking point.

Table 12. Data on short-shaft suspended-spindle standard gyratories, selected from manufacturers' catalogues

Size of receiving opening, in.	Approximate hourly capacities *a* to open settings stated, in.				Weight, lb., aver.	R.p.m. *b*	Installed hp.	Fall through machine ft.-in.
	Minimum		Maximum					
	Size	Tons	Size	Tons				
2 1/2×28	3/8	0.5	1/2	0.75	550	700	4	1–9
7×56	1	14	2 1/2	47	18,000	450	15 to 25	5–6
8×70	1 3/4	39	3 1/2	93	30,000	400	25 to 40	6–9
10×90	2	50	3 1/2	128	37,000	375	45 to 75	7–6
12×90	2 1/4	60	3 1/2	140	39,500	365	55 to 85	7–7
14×110	2 1/2	100	4 1/2	200	60,000	350	60 to 100	8–9
16×120	3	150	5	275	99,000	330	75 to 150	10–6
26×200	3 1/2	225	6	400	160,000	320	200	13–0
30×210	4	235	6 1/2	450	175,000	320	125 to 175	13–6
36×262	4 1/2	370	7	600	260,000	300	175 to 250	15–3
42×284	5	410	7 1/2	700	285,000	300	200 to 275	16–6
48×332	5 1/2	700	9	1,890	520,000	250	350	19–6
54×360	6 1/4	875	9 1/2	2,100	625,000	240	225 to 400	26–6
60×400	6 1/4	990	10	2,400	880,000	225	225 to 500	31–0
72×484	9	2,500	12	3,400	1,400,000	175	500	32–0

a Based on run-of-quarry limestone scalped to the open setting stated; crusher buried; straight-element mantles and concaves.

b Usual gear ratio is approximately 1 : 2.5.

Modern crusher construction, however, eliminates this feature and the driving pulley is made extra heavy, with clamped hub keyed onto the drive shaft. Small crushers are belted to transmit one horsepower per inch of belt traveling at 1,000 to 2,000 f.p.m., reckoned on installed horsepower; the corresponding figures for large crushers are 400 to 500 f.p.m. Tex-rope drive is common, and in some cases direct connection with the motor through flexible coupling is employed.

Discharge-chute design is a sore point with operators handling sticky ores, and with crusher builders faced with the necessity to keep the spindle short for strength and the fall through the machine low for economical mill design and operating economy. From the builder's point of view the high point on the chute should be crowded up as near as possible under the crushing head, but such design results in sticking and clogging with moist or clayey ores, owing to the small momentum which the discharged material striking at this point has attained after discharge from the crushing zone. The usual design expedients are: (1) a special inverted-vee saddle liner plate to give greater initial slope at this point; (2) a 2-way discharge chute, which permits dropping the chute diaphragm without lowering the chute lip, but produces separated discharge streams that usually must be brought together again with further loss of head; (3) elimination of the chute and substitution of a shield over the driving mechanism, around the entire periphery of which discharge takes place. A hopper must then be provided in the foundation to bring the discharge stream together, which interferes with free bottom access to the drive mechanism.

Sizes. Data as to the different sizes of short-shaft suspended-spindle gyratories available, compiled from the publications of the principal manufacturers, are given in Table 12.

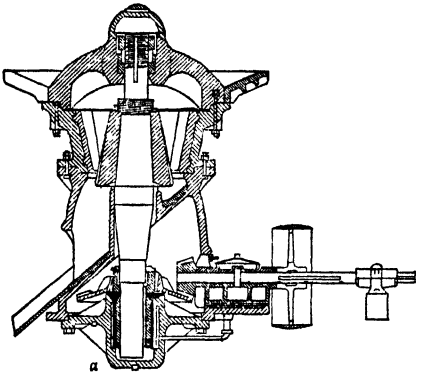

FIG. 21. Long-shaft suspended-spindle gyratory crusher.

Long-shaft suspended-spindle gyratories. Although the current offerings of large crusher manufacturers are of the short-shaft type, the majority of suspended-spindle gyratories now in use are predominantly of the long-shaft type, in which the eccentric is below the drive gear (Fig. 21). Essential structural difference from the short-shaft machine, other than in the location of the eccentric with respect to the bevel wheel, is that the eccentric bearing is carried in the bottom plate *a*, which constitutes a third principal element of the main frame. Data representative of sizes and performances of these machines, selected from typical manufacturers' ratings, are given in Table 13.

Table 13. Data on long-shaft suspended-spindle gyratory crushers, from manufacturers' catalogues

Old No. *a*	Size of receiving opening, in.	Approximate hourly capacities *b* to open settings stated, in.				Weight, lb., aver.	R.p.m.	Installed hp., aver.	Fall through crusher, ft.-in.
		Minimum		Maximum					
		Size	Tons	Size	Tons				
0	2 1/2×28	3/8	0.6	.....	.....	1,000	700	3	1–7
1	5×50	1	5	1 3/4	8	7,000	600	5	4–9
2	6×50	1	6.5	1 3/4	10	10,250	500	8	5–4
3	7×56	1 1/4	11	2 1/2	20	17,000	475	12.5	5–10
4	8×68	1 1/2	20	3 1/2	48	23,000	450	16	6–9
5	10×80	1 3/4	30	3	60	37,000	400	25	7–10
6	12×88	2	50	4 1/2	120	48,000	375	35	8–9
7 1/2	14×104	2 1/2	80	4	120	68,000	350	62	9–6
8	19×138	3	125	5	295	106,000	375	82	11–9
21	21×152	3	160	5	300	160,000	325	125	13–6
24	24×168	3 1/2	210	5 1/2	370	175,000	350	138	14–5
26	26×200	4	310	5 1/2	450	143,000	340	200	14–10
36	36×272	4 1/2	550	7	940	405,000	300	240	18–1
42	42×272	5 1/2	700	9	1,300	425,000	300	255	.....
48	48×332	5 1/2	1,158	9	1,890	470,000	275	300	21–9
60	60×420	7	1,678	10	2,400	750,000	220	350	29–3
72	72×484	9	2,572	12	3,432	1,000,000	175	400	34–7

a Modern practice numbers the crusher by inches gape.

b Based on run-of-quarry limestone scalped to the open setting stated; crushers fitted with straight-element mantles and concaves.

Supported-spindle gyratory of the old type has not been built for a number of years. A recent crusher of this general type for fine-reduction service is described in Art. 6.

Fixed-spindle gyratory (Fig. 22) is best known under the name of TELSMITH BREAKER. It differs from the types already described in that spindle *a* is rigidly fixed top and bottom and the movement of the crushing head *b* is effected by an eccentric sleeve *c* running between the spindle and the crushing head itself. The mechanical principle is that of a continuous wedge. Discharge of rock is vertical; a discharge chute is no essential part of the crusher proper. Lubrication is effected by a pump *d* operating in an oil well *f*, oil being thus forced by pipes to all sliding surfaces. The frame and spider are made of cast steel and, as a result of this fact and the vertical shortening made possible by applying the moving force directly under the crushing head rather than at the end of a spindle acting as a lever (as in the other types of gyratory), the weight for a given size reduction and capacity are less than in the other types.

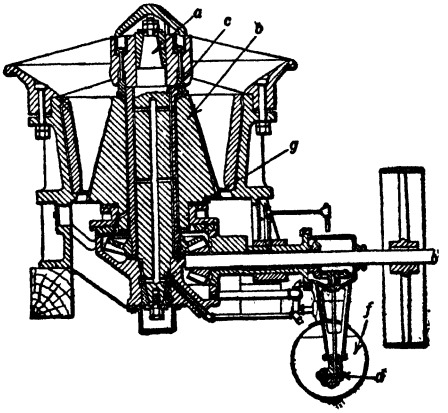

FIG. 22. Fixed-spindle gyratory crusher.

The fixed-spindle gyratory is used as a primary or secondary coarse crusher. Its relatively small height lends itself to rugged construction and the short spindle cuts down the clear height that must be left above the machine for convenience in repair work. The fact that the length of stroke is the same on both large and small pieces is an advantage when soft, tough material is being crushed but is unnecessary and may be disadvantageous with hard and brittle materials.

The sizes available and performances to be expected are given in Table 14, compiled from manufacturer's data.

Table 14. Data on fixed-spindle gyratory crushers, from manufacturer's catalogue

Size of receiving opening, in.	Approximate hourly capacities *a* to open setting stated, in.				Weight, lb.	R.p.m.	Installed hp., aver.	Fall through crusher, ft.–in.
	Minimum		Maximum					
	Size	Tons	Size	Tons				
6 3/4×70	1	19	1 1/2	24	10,000	750	18	5–9
8×82	1 1/4	32	1 3/4	38	12,500	750	22.5	6–6
10×102	1 1/2	41	2	54	19,000	700	27.5	7–3
13×118	2	75	3	95	29,000	560	45	8–6
16×148	2 1/2	128	3 1/2	152	44,500	500	68	9–10
20×176	3	210	4	265	62,500	440	80	10–4
25×212	3	315	4	385	108,000	440	115	12–10

a Capacity based on run-of-quarry limestone scalped to the open setting stated. Crusher fitted with straight-element mantle and concaves.

Concaves for gyratory crushers are made almost without exception of manganese steel, very occasionally of chilled iron for light service. (Compare right and left sides of Fig. 19.) The staves are wedge-shaped, supported either at the bottom by a sectional removable iron rim resting on a shelf on the lower shell or by means of lugs or ribs that are cast on the back near the top and fit into a groove in the top shell. After being set in place the staves are backed by hard zinc or hard babbitt poured in between them and the shell. Frequently the lower edge of the staves is beveled in order to increase the amount of metal behind the point at which maximum crushing is done. Staves are usually sectionalized into two, three, or four tiers, according to the size of the crusher. At some plants the upper tiers are made of chilled iron and the lower of manganese steel.

WEAR of concaves varies according to the material used. Figures from practice are given in Table 15.

Breaking head is, like the concaves, made either of chilled iron or manganese steel. Chilled-iron breaking heads are solid and fastened directly to the spindle. When manganese steel is used, a soft iron or semi-steel core is fastened to the spindle and a mantle of manganese steel is slipped on over this. (See Fig. 19.) In small crushers the head is keyed to the spindle with zinc or babbitt or steel; in large

crushers a self-tightening nut of the general type shown in Fig. 24 is used to press the head tightly onto a tapered spindle. The mantle is held down on the core by another self-tightening arrangement. Two devices are commonly used. GUN-LOCK MANTLE is illustrated in Fig. 23. In the form shown the core is keyed to the spindle by means of feathers in keyways *a*. On the outside of the core two grooves *b* are cut at 180°, and the bottom of the core is finished to a curve whose highest point is at the bottom of grooves *b*. The mantle is ground to fit closely on the head and is cast with lugs *c* that slip down the grooves *b* and pull the mantle tightly onto the core as the mantle turns with respect to the spindle. Another SELF-TIGHTENING MANTLE is shown in Fig. 24. In one form the nut is made of three pieces: piece *1*, pinned to the top of the mantle and carrying on its inner surface a left-hand thread; piece *2* having a corresponding left-hand thread on the outside to engage piece *1* and a right-hand thread on the inside to engage the thread on the spindle; and piece *3* with a right-hand thread inside. When the mantle loosens it works round on the core and imparts its motion to nut *1*. If the direction of motion is such as to cause the left-hand thread to unscrew, the mantle is thereby pressed down onto the core. If, on the other hand, the motion is such as to cause the left-hand thread to tighten, then nut *2* is caused to move down on the spindle, again pressing the mantle down on the core. With this type of mantle zinc is used to make a tight joint between the mantle and the core. A DISADVANTAGE of the use of self-tightening locknuts is that large pieces of ore jammed in the mouth of the breaker may loosen the control nut. This happened frequently on a primary gyratory at MOOSE MOUNTAIN (*99 J 973*).

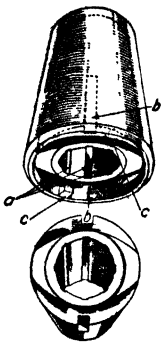

FIG. 23. Gun-lock mantle for gyratory crusher.

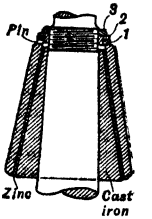

FIG. 24. Self-tightening locknut for gyratory mantle.

In large crushers the mantles are frequently made in two parts. The greatest wear comes at the bottom, and the amount of metal that must be wasted can be decreased by making the bottom part replaceable while retaining the old upper part. Mantles are made corrugated or smooth. The corrugated head is best for coarse breaking; a smooth head is best if a large proportion of fines is desired or if the feed to the crusher is already relatively fine. LIFE of mantles is given in Table 15.

Bell-head fittings (Fig. 25) comprise the combination of concave mantle and convex fixed breaking surface for a gyratory corresponding to the curved breaking faces for a jaw crusher (see Fig. 8 and discussion). Traylor Eng. & Mfg. Co. reports (*PC, 3/3/42*) that about 300 standard gyratory crushers have been refitted with the curved fittings. The advantages are the same as with the jaw crusher.

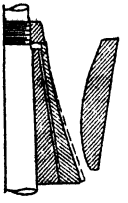

FIG. 25. Bell-head fittings for standard gyratory crusher.

Lubrication. In all crushers the eccentric bearing runs submerged in oil. Capillarity is depended upon in some crushers to draw oil from the bath into the bearing surfaces while in others a forced feed is used. A pump drives the oil upward along the spindle bearing into an upper well whence it feeds by gravity over the outer surface of the eccentric and bevel gear faces and also through the countershaft bearing back to the well. Some makers provide coils for cooling water in the oil reservoir. One form of forced feed, using a gear pump attached to and driven by the eccentric, is shown in Fig. 20. In small crushers the main countershaft bearing is ring- or chain-oiled with overflow from the reservoir into an oil sump in the bottom plate. It is probable that the best lubricating system is one in which an efficient forced feed of heavy oil is employed. Extrusion of this oil around bearings aids to keep grit and dust out.

Manufacturers of gyratory crushers: Allis-Chalmers Mfg. Co., Eimco Corp., Gruendler Crusher & Pulverizer Co., Kennedy-Van Saun Mfg. & Eng. Corp., Morse Bros. Mach. Co., Smith Eng. Wks., Sturtevant Mill Co., Traylor Eng. & Mfg. Co.

Adjustments of gyratory crushers are (*a*) width of discharge opening, (*b*) throw, and (*c*) speed. Width of discharge opening is changed in the suspended-spindle crusher by raising or lowering the spindle by means of the adjusting nut (6), Fig. 19. A ring bolt is furnished to engage the top of the spindle, which is then hoisted by appropriate means, allowing the adjusting nut to be readily moved as desired. In the fixed-spindle type the adjustment is made by changing the thickness of shims (*g*), Fig. 22. Range of adjustment in width of opening is limited because of the fact that the nip angle is markedly increased as a result of wear of the breaking head. This increase in nip angle causes a great decrease in ability of the crusher to discharge, with corresponding decrease in capacity. If more than a small adjustment in width of discharge is required, it must be obtained by using thicker and shorter concaves and breaking head.

Throw is less than in jaw crushers. It is adjustable only by changing the eccentric sleeves. It should be greater in large crushers than in small and should be greater for relatively soft and tough rocks than for hard and brittle rocks.

Speed may be varied throughout wide limits. Increased speed is not accompanied by the marked increase in vibration and shock that occurs with jaw crushers. The lowest speed compatible with the capacity required is most economical within certain operating limits. A tendency to clog by reason of the sticky character of ores may often be overcome by increase in speed, thus increasing the sharpness with which the head recedes from the concaves.

Table 15. Performance of lever-type gyratory crushers

Plant	Tungsten Mines Co.	Witherbee-Sherman	Moctezuma	Bunker Hill & Sullivan	Chino	Homestake	McIntyre Porcupine	U.S.S.R. & M. Midvale	Alaska-Gastineau	Chuquicamata	Moctezuma
Machine											
Gape, in.	10	10	10	12	12	14	14	14	18	18	18
Open setting, in.	2	1 1/2	1 1/2	2 1/2	3	5	4	1 1/2	2 1/4	2 1/2	4
Speed, r.p.m.	126	140	200	171	130	140	.....	.....	154	.....	160
Motor, hp.	40	37.5	37.5	.....	40	100	50	75	76.5	150	75
Operation											
Feed: Tons per hr.	16.7	67	33	100	290	200	80	100	100	350	167
Size, in. *a*	R.o.m.	.....	4	R.o.m.	12 max.	12	R.o.m.	10 max.	9 max.	10 max.	R.o.m.
Product, size, in. *a*	.....	.....	.....	*g*	.....	.....	.....	2 1/2 max.	.....	3 max.	.....
Power consumed, hp.	30	6 to 11	25	13.5	25	.....	47	70	44	.....	65
Running time per day, hr. *ac*	24	9	16	6	22	8	8	10	24	16	16
Lost time, %, aver.	1	.....	1	.....	8	Negl.	<1	<1	.....	Negl.	1
Lubricant, lb. per shift	2	8	6	0.33	1.33	16	.....	2	.....	4	.....
Wearing parts, life (days)											
Eccentric	90 to 180	150	40	20 mo.	360	120	250	.....	52	.....	180
Gears	*e*	300	200	20 mo.	>7 yr.	1,670	350	.....	375	200 to 300	360
Mantle	520	300	180	90 *h*	360	120	250	300	375	400	300
Material	Mn	Mn	Mn	WI	Mn	CI	Mn	Mn	Mn	Mn	Mn
Concaves	*f*	150	180 *g*	9 mo. *i*	21 mo.	330 *j*	300	300	300	300 *Hf*	300 *g*
Material	Mn	Mn	Mn	Mn	Mn	Mn	*k*	Mn	Mn	Mn	Mn
Chute liners	270	360	5 to 6 mo.	30	120 to 150	120	200	.....	679	300	15
Material	CI	Mn	CI	St	*m*	CI	SS	.....	.....	Mn	CI
Spider guard	.....	.....	.....	180	.....	350	.....	.....	.....	.....	300
Time to change concaves, hr.	18 *d*	.....	.....	12	.....	8	16	.....	27	8	120
Derived data											
80%-size: Feed *c*	11.6 *aa*	.....	5.4	13.9 *aa*	16.3	16.3	16.2 *aa*	13.6	12.2	13.6	20.9 *aa*
Product *c*	2.0 *ab*	.....	1.5 *ab*	2.5 *ab*	3.0 *ab*	5.0 *ab*	4.0 *ab*	1.5	2.2 *ab*	1.8	4.0 *ab*
Reduction ratio: R_A *b*	5	6.7	5.7	4.8	4.0	2.8	3.5	9.3	8.0	7.2	4.5
R_L *x, z*	.....	.....	2.7	.....	4.0	2.4	.....	6.8	4.0	5.7	.....
R_W *y, z*	.....	.....	2.7	.....	4.0	2.4	.....	6.7	4.0	4.0	.....
R_{80} *c*	5.8	.....	3.6	5.5	5.4	3.3	4.0	9.1	5.5	7.5	5.2
Reduction tons per hr. *v*	96.8	.....	119	550	1,565	660	320	910	550	2,620	870
Reduction tons per hp-hr.	3.2	.....	4.8	40.7	62.6	.....	6.8	13.0	12.5	.....	13.4

Table 15. Performance of lever-type gyratory crushers—*Continued*

Plant	N. J. Zinc Co.	Ray	Cananea	Andes	American Zinc Co.	American Zinc Co.	Mufulira	New Cornelia		Utah Copper, Arthur	Chuquicamata
Machine											
Gape, in.	18	18	19	20	26	30	30	48	54	54	60
Open setting, in.	3	3 1/2	3 1/2	3	5	5	5	6	7	8	7
Speed, s.p.m.	145	.....	.....	122	.....	.....	330	85	96	95	.....
Motor, hp	50	.....	75	150	150	166	200	200	300	250	500
Operation											
Feed: Tons per hr.	70	250	220 *n*	.....	150	150	500	800	850	1,200	2,500
Size, in. *a*	R.o.m. *l*	13 max.	15 max.	15 max.	R.o.m.	R.o m.	.....	R.o.m.	R.o.m.	R.o.m.	R.o.m. *s*
Product, size, in. *a*	3 max.	3 max.	*15*	3 1/2 max.	6 max.	*16*	.....	.....	.....	8 max.	10 max.
Power consumed, hp.	40	50 *n*	68 *n*	.....	100	100	150 *n*	150 *n*	150 *n*	150	350 *n*
Running time per day, hr. *ac*	8	20	.....	16	.....	.....	16	16	24	15	16
Lost time, %, aver.	Negl.	Negl.	.....	Negl.	.....	.....	.....	1.6	2.4	Negl.	Negl.
Lubricant, lb. per shift	8	4	.....	2	8	8	8	6.5	2.0	4	.....
Wearing parts, life (days)											
Eccentric	300	40	.....	*o*	.....	.....	Orig.	365	365	Orig.	*t*
Gears	3,000 *w*	Orig.	.....	*p*	Orig.	Orig.	Orig.	Orig.	Orig.	Orig.	Orig. *u*
Mantle	3,000	18 mo.	.....	*q*	.....	730	2,296 hr.	547	547	1,200	600
Material	Mn	Mn	.....	Mn	Mn	Mn	Mn	Mn	Mn	Mn	Mn
Concaves	2,000	18 mo.	.....	*r*	730	730	2,000 hr.	182	182	1,200	400
Material	Mn	Mn	.....	Mn	Mn	Mn	Mn	Mn	Mn	Mn	Mn
Chute liners	2,000	36 mo.	.....	.....	.....	180	150	120	120	365	200
Material	Mn	WI	.....	.....	Mn	WI	WI	Mn	Mn	WI	Mn
Spider guard	.....	.....	.....	.....	.....	750	Orig.	.....	365	Orig.	.....
Time to change concaves, hr.	8	2	.....	8	.....	5	.....	24	24	12	48
Derived data											
80%-size: Feed *c*	20.9 *aa*	17.7	20.8	20.8	30.3 *aa*	34.8 *aa*	.....	55.7 *aa*	62.6 *aa*	62.6 *aa*	69.6 *aa*
Product *c*	4.0 *ab*	1.8	2.6	2.1	3.6	4.7	.....	6.0 *ab*	7.0 *ab*	8.0 *ab*	6
Reduction ratios: R_A *b*	6.0	5.2	5.4	6.7	5.2	6.0	6.0	8.0	7.7	6.7	8.6
R_L *x, z*	.....	.....	7.4	4.3	.....	.....	.....	.....	.....	.....	.....
R_W *y, z*	.....	3.7	4.3	5.0	.....	.....	.....	.....	.....	.....	.....
R_{80} *c*	5.2	9.8	8.0	9.9	8.4	7.4	.....	9.3	8.9	7.8	11.6
Reduction tons per hr. *v*	364	2,450	1,760	.....	1,260	1,110	.....	7,420	5,350	9,360	29,000
Reduction tons per hp-hr.	9.1	49	25.9	.....	12.6	11.1	.....	49.5	35.6	62.4	82.9

a Numbers in italic refer to Table 15*a*.
b Gape + open setting.
c Eq. 5.
d 5 men.
e 180 for CI; 450 to 540 for steel.
f 300 for upper half; 90 to 120 for lower half.
g Increased about 50 days by use of oversize head.
h 3 sizes of mantles used in sequence; 1 set of concaves lasts as long as 3 mantles.
i 570,000 tons, mantles; 460,000 tons, concaves.
j Aver. bowl-liner tonnage 518,022.
k Upper, CI; lower, Mn.
l Scalped to 2.5 in.
m Grizzly bars.
n Estimated.
o 592,000 tons.
p 5,050,000 tons.
q Built up as soon as flanged, usually after 150,000 to 200,000 tons; built-up sections have 1/3 to 1/2 life of new mantle. Start with 45-in. diam. mantles and finish with 49-in. on each set of concaves.
r 1,157,000 tons.
s Scalped on 10-in. grizzly.
t Babbitt every 1,000 days.
u No appreciable wear in 10 yr.
v Tons per hr. $\times R_{80}$ (Eq. 8).
w Manganese.
x See Eq. 1.
y See Eq. 3.
z On the assumption that "maximum," referring to feed, designates the spacing of the limiting grizzly.
aa Estimated at $1.16G$ on basis that thickness t of largest particle is $0.85G$, w for this particle is F_s $(=1.7)t$, and $w_{80} = 0.8w$ on basis of straight-line size distribution.
ab Estimated from setting on basis that $w_{80p} = 0.6F_{s8e} = s_e$ when $F_s = 1.7$.
ac Nominal.
Hf = Hard-faced; hard-surfaced.

Speed, throw, capacity, reduction ratio, and power consumption are closely related. If the reduction ratio is increased when the crusher is working near maximum capacity, the speed of the crusher must be increased to keep up the capacity. This will be accompanied by a considerable increase in power consumption. If the machine is sufficiently overmotored so that the change brings no perceptible strain on the driving equipment, it is well to watch for heating of the eccentric, as any marked increase in the direction above noted over the figures recommended by the manufacturers is likely to result in burned-out bearings. If increase in reduction ratio without change in shape of the breaking zone is to be effected without mechanical troubles, it should be accompanied normally by decrease in speed and a decrease in the amount of material in the crushing zone, brought about by decrease in feed rate. (But see Art. 6.)

Performances are given in Tables 15 and 16.

Size of feed is governed by the same considerations as apply to jaw crushers (see p. 09).

Reduction ratio, estimated on 80% basis, at 20 plants reporting, ranged from 3.3 to 11.6 for primary suspended-spindle crushers and averaged 6.8. Corresponding figures for fixed-spindle machines are: 11 plants, range 3.9 to 9.1, average 6.1. These figures involve, however, so many estimates as to render them indicative only and probably consistently high. Manufacturer's recommendations for the ratio of gape to minimum open setting for machines with straight-element mantle and concaves range from 6 to 9 with increasing gape, while with maximum settings the corresponding range is from 3 to 6. Primary-type machines with curved concaves will operate at considerably larger ratios.

Michaelson (*PC*) reports a 20-in. machine, fed with rock as coarse as it will take, reducing to 93% <1.5-in. and 72% <1-in. at a power consumption slightly more than 1 hp-hr. per ton (T_R per hp-hr. = 21) and a 15-in. machine reducing 12-in. feed to 90% <1-in. at a consumption of approximately 0.9 hp-hr. per ton (T_R per hp-hr. = 16.3).

Angle of nip in gyratory crushers with straight-element crushing surfaces ranges from 21° to 24° with an average near 22°. On large primary gyratories, where gravity is of marked aid to nip with the large pieces at the mouth, and with curved surfaces, the angle runs up to 27° to 30°.

Capacity. For general discussion, see p. 11. Capacities for different sized crushers, according to makers' catalogues, are given in Tables 12, 13, and 14.

The Hersam capacity formula is supposed to be applicable to gyratory crushers as well as jaw crushers, but when applied with $K = 0.75$ to the performances listed in Table 15 percentage deviations range from +90 to −670, while with $K = 0.4$ the range is from +94 to −390. The range for the flow formula is nearly as great and the Michaelson formula is entirely inapplicable.

Comparative reduction tons per hr. for suspended-spindle machines, as calculated from manufacturers' ratings, are given in Figs. 26 and 27, and those for the fixed-spindle machine in Fig. 28. The hatched areas represent the range in rating as it develops from the variation in tonnage recommendations for different settings of the same crusher. Since there is no reason to believe that the maximum capacity of a given machine to crush a given feed has different values, it follows that a line should represent this maximum capacity, and such lines, which smooth out and average the manufacturers' statements of capacity, have been run in on the charts. These lines are recommended for use in estimation (see p. 13).

Table 15*a*. Sizing tests referred to in Tables 8, 15, and 16 (Percentages retained on designated screens)

Ref. No.	Plant	Material	5 1/2-in.	4	3	2	1 1/2	1	3/4	1/2	3/8	3-m.	4	6
1	Balmat	P	.....	.....	*a*	24.0	15.7	18.5	10.5	6.1	3.3	2.6	2.3	2.2
2	Premier	P	.....	.....	34.5	.....	.....	39.5	.....	15.2	.....	4.3	.....	.....
3	Balmat	F	.....	.....	32.7	24.5	11.5	11.7	.....	.....	.....	.....	.....	.....
		P	.....	.....	.....	.....	.....	15.9	32.4	14.5	12.8	4.9	3.0	.....
4	Federal	P	.....	.....	.....	.....	13.2	22.3	16.0	.....	15.0	7.5	6.3	3.3
5	Premier	P	.....	.....	41.2	.....	.....	56.0	.....	.....	.....	.....	.....	.....
6	Paymaster	F	0	7.5	11.6	3.0	6.3	21.3	18.9	22.8	0.8	0.8	.....	.....
		P	.....	.....	.....	.....	.....	4.0	14.2	32.1	11.1	8.2	.....	.....
7	Bonne Terre	P	.....	.....	.....	.....	.....	2.4	19.8	25.1	15.8	10.0	4.6	3.5
8	Leadwood	P	.....	.....	.....	.....	.....	4.6	21.8	20.6	14.4	9.5	6.7	3.9
9	Bunker Hill & Sullivan	P	.....	.....	.....	9.3	.....	40.0	16.1	9.0	5.3	4.4	.....	5.8
10	Desloge	P	.....	.....	.....	.....	.....	50.8	10.9	7.5	6.9	.....	8.7	2.3
11	Federal	P	.....	.....	17.6	28.1	16.4	.....	.....	.....	.....	.....	.....	.....
12	Leadwood	P	.....	.....	.....	.....	.....	67.1	8.3	5.6	4.0	2.9	2.3	1.3
13	Bonne Terre	P	.....	.....	.....	.....	.....	70.0	8.5	4.2	3.4	2.2	1.6	1.2
14	New Jersey Zinc Co	P	.....	.....	.....	40.6	32.2	5.5	3.0	2.6	2.0	1.1	1.3	1.0
15	Cananea	P	.....	.....	14.2	15.6	.....	22.9	.....	10.8	.....	9.9	3.1	2.6
16	Mascot	P	6.0	17.4	21.7	20.4	8.0	8.5	.....	7.4	0.9	2.4	.....	2.8
17	Sunshine	P	.....	.....	.....	.....	.....	14.8	.....	34.4	.....	24.1	.....	.....
18	Matahambre	P	.....	.....	.....	.....	.....	33.4	9.6	8.6	8.8	6.6	4.9	4.0

Ref. No.	Plant	Material	8	10	14	20	28	35	48	65	100	150	200	< last
1	Balmat	P	1.6	1.8	1.4	1.5	1.4	1.2	1.0	0.9	1.0	0.6	0.9	1.5
2	Premier	P	.....	.....	.....	.....	.....	.....	.....	.....	.....	.....	.....	6.5
3	Balmat	F	.....	.....	.....	.....	.....	.....	.....	.....	.....	.....	.....	19.6
		P	.....	.....	.....	.....	.....	.....	.....	.....	.....	.....	.....	16.5
4	Federal	P	3.2	2.4	.....	.....	.....	.....	.....	.....	.....	.....	.....	10.8
5	Premier	P	.....	.....	.....	.....	.....	.....	.....	.....	.....	.....	.....	2.8
6	Paymaster	F	.....	.....	.....	.....	.....	.....	.....	.....	.....	.....	.....	9.4
		P	.....	.....	.....	.....	.....	.....	.....	.....	.....	.....	.....	30.4
7	Bonne Terre	P	4.3	2.4	1.7	1.5	1.2	0.9	0.7	0.6	0.7	0.4	0.8	3.6
8	Leadwood	P	3.8	2.6	2.0	1.6	1.3	1.0	1.1	1.1	.....	.....	.....	4.0
9	Bunker Hill & Sullivan	P	.....	2.4	.....	1.7	.....	.....	.....	.....	.....	.....	.....	6.0
10	Desloge	P	2.2	1.7	1.4	1.3	1.0	1.2	0.7	0.6	0.6	0.5	0.4	1.3
11	Federal	P	.....	.....	.....	.....	.....	.....	.....	.....	.....	.....	.....	37.9
12	Leadwood	P	1.4	0.8	1.0	0.6	0.6	0.3	0.5	0.3	0.3	0.3	0.1	2.3
13	Bonne Terre	P	1.7	1.0	0.8	0.7	0.6	0.4	0.3	0.3	0.4	0.2	0.4	2.1
14	New Jersey Zinc Co	P	0.9	1.1	1.2	1.3	0.9	0.9	0.7	0.7	0.4	0.3	0.2	0.1
15	Cananea	P	2.6	2.1	1.9	1.4	1.4	1.4	1.0	1.0	1.0	0.7	0.5	5.9
16	Mascot	P	.....	.....	.....	.....	.....	.....	.....	.....	.....	.....	.....	4.5
17	Sunshine	P	.....	11.8	.....	.....	.....	.....	.....	.....	.....	.....	.....	14.9
18	Matahambre	P	.....	6.5	5.4	.....	.....	1.8	1.2	1.2	1.0	1.1	0.5	5.4

a Includes undersize of preceding scalping screen.

Table 16. Performance of fixed-spindle gyratory crushers

Plant	St. Joseph Lead, Federal	Presidio	Shattuck Arizona	Liberty Bell	Burro Mountain	St. Joseph Lead Co.				Mt. Lyell	United Eastern
						Desloge	Federal	Leadwood	Bonne Terre		
Machine											
Gape, in.	6	8	10	12	12	14	14	14	18	18	18
Open setting, in.	1	1 3/4	1 1/2	2	3 1/2	2 1/4	3 1/2	3	3	5 1/16	1 3/4
Speed, s.p.m.	178	.....	.....	132	70	163	110	104	116	430	140
Motor, hp	100	25	25	40	40	150	150	150	100	50	50
Operation											
Feed: Tons per hr.	100	32	25 *l*	100	250	150 to 175	250	250	110	150	150 to 250
Size, in. *a*	.....	10 max.	10 max.	12 max.	12 max.	.....	.....	R.o.m.	R.o.m.	15 max.	10 max.
Product, size, in. *a*	4	.....	.....	.....	.....	*10*	*11*	*12*	*13*	8 max.	.....
Power consumed, hp.	50	18	20 *d*	.....	20	100	60	115	40	25	13.4
Running time per day, hr.	24	12	15	8 to 12	.....	24	24	20	24	24	5 to 8
Lost time, %, aver.	<1	2 1/2	Negl.	.....	.....	<1	<1	Negl.	30 *h*	.....	.....
Wearing parts, life (days)											
Eccentric	.....	54 mo.	180	>2,000	.....	Orig.	.....	*n*	*l*	.....	.....
Gears	.....	54 mo.	900	1,100	.....	1,500	Hf	Orig.	>60 mo.	700	.....
Mantle	Hf	320 *e*	90 *j*	12 to 18 mo.	.....	Hf	Hf	Hf	Hf	250	.....
Material	St	Mn	Mn	Mn	.....	Mn	St	St	St	Mn	Mn
Concaves	Hf	220 *e*	90	12 mo.	.....	Hf	Hf	Hf	Hf	220	.....
Material	Mn	Mn	Mn	Mn	.....	Mn	Mn	Mn	Mn	Mn	*f*
Chute liners	.....	175	180	180	.....	180	.....	100	.....	.....	.....
Material	.....	St *g*	*k*	*m*	.....	WI	.....	WI	.....	.....	.....
Time to change concaves, hr.	.....	8	10 to 15	12 to 18	.....	.....	.....	4	4	16	6
Derived data x											
80%-size: Feed	7.0 *r*	13.6 *s*	13.6 *s*	16.3 *s*	16.3 *s*	16.3 *r*	16.3 *r*	16.3 *r*	20.9 *r*	20.4 *s*	13.6 *s*
Product	1.3 *t*	1.8 *u*	1.5 *u*	2.0 *u*	3.5 *u*	2.8 *t*	2.9 *t*	4.2 *t*	4.2 *t*	4.8 *v*	1.8 *u*
Reduction ratios: R_A *b*	6.0	4.4	6.7	6.0	3.4	6.2	4.0	4.7	6.0	2.8	10.3
R_L *o*	5.1 *w*	5.5 *q*	6.7 *q*	6.0 *q*	3.4 *q*	5.1 *w*	5.1 *w*	5.1 *w*	6.5 *w*	1.9 *q*	5.7 *q*
R_W *p*	5.1 *w*	5.5 *q*	6.7 *q*	6.0 *q*	3.4 *q*	5.3 *w*	3.4 *w*	4.0 *w*	5.1 *w*	2.9 *q*	5.7 *q*
R_{80} *c*	5.4	7.6	9.1	8.2	4.7	5.8	5.6	3.9	5.0	4.2	7.6
Reduction tons per hr. *x*	540	243	227	820	1,175	975	1,400	725	550	630	1,520
Reduction tons per hp-hr. *x*	10.8	13.5	11.4	.....	59	9.8	23.3	6.3	13.7	25.2	113

a Numbers in italic refer to columns in Table 15*a*.
b Gape ÷ set.
c See Eq. 4.
d Estimated.
e Life: Mantle 105,000 tons; concaves 70,000 tons.
f Upper ring chilled cast iron, lower manganese steel.
g Rubber being tried.
h Causes not connected with crusher.
i Very hard rock.
j With one set of concaves; used another 90 days with another set of concaves.
k Old ball-mill liners.
l Babbitt inner liner 100 operating days, outer liner after 150 operating days.
m 1/4-in. sheet iron.
n Babbitt liners every 180 days.
o See Eq. 1.
p See Eq. 3.
q On the assumption that "maximum," referring to feed, designates the spacing of the limiting grizzly.
r Calculated on basis that $w_{80f} = 0.80 \times 0.85GF_s = 1.16G$ (see p. 10).
s Calculated on basis that $w_{80f} = 0.80 \times 1.7 \times$ max. = 1.36 max. (see p. 10).
t See Eq. 4.
u Taken as equal to s_e on basis that this determines $t_{max.}$ and that $w_{80p} = 0.6F_s t_{max.}$ (factor 0.6 from Fig. 33).
v On basis $w_{80} = 0.6w_{max.}$ (see Fig. 33).
w On basis that limiting $t_f = 0.85G$, and/or limiting $t_p = s_e$, and $w_f = t_f F_s$.
x These data are derived on assumptions which tend generally to give maxima. Exceptionally high figures should be viewed with extreme doubt.

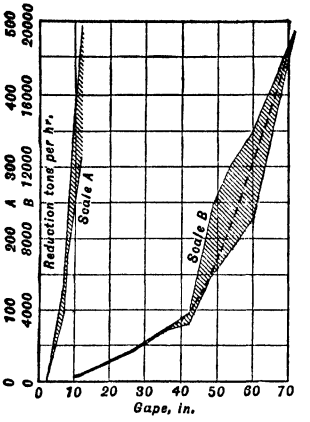

FIG. 26. Capacities of short-shaft suspended-spindle gyratory crushers (*Makers' ratings*).

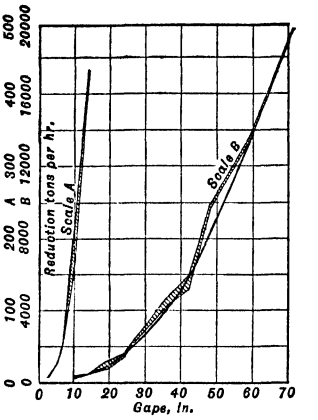

FIG. 27. Capacities of long-shaft suspended-spindle gyratory crushers (*Makers' ratings*).

Capacities reported from the field range from 0.3 to 2.31 times the values from the dotted curve, the average for 17 reports being 0.88. Two out of three field crushers show low capacities, the discrepancy being greater, in general, with large crushers. The reason for this is, probably, that the crushers are oversize to satisfy reception requirements. Reported field performances greatly in excess of rated capacities are, so far as can be judged, usually due to crediting the crusher with undersize present in the feed. This is not necessarily inconsistent with Shepard's findings (*RI 3377, 3380*) that the number of tons of rock finer than either the open setting or half thereof produced per 100 tons of feed is from 1.5 to 2 times greater with sized feed than with unsized feed, while the time required for a choke-fed crusher to free itself of a skip-load of sized stone is no greater than is required for a skip-load of unsized stone. It is not believed that the high performances reported are due to exceptionally easily crushed rock, for the reason that there is no consistent correspondence of this kind indicated.

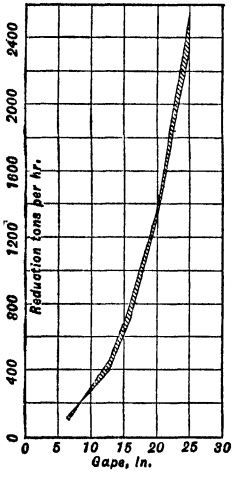

FIG. 28. Capacity of fixed-spindle gyratory crusher.

Power. Motors should have ratings well in excess of average or even of full-load power drafts to take care of cold starting and to carry over feed rushes without serious loss of speed. Minimum recommendations of the manufacturers, as shown in Fig. 29, are nearly twice average full-load drafts.

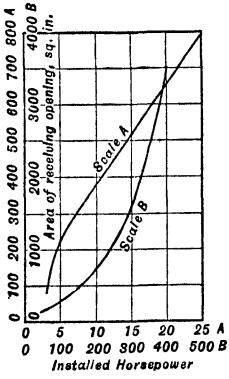

FIG. 29. Installed horsepower for long-shaft suspended-spindle gyratory.

Figs. 30 and 31 represent the results of power tests on gyratory crushers in actual operation. The figures show that idling power is roughly 30% of the full-load peak.

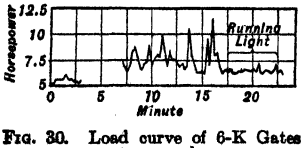

FIG. 30. Load curve of 6-K Gates gyratory crusher.

Notes to Fig. 31. Speed of pinion shaft, 207 r.p.m.; maximum size of feed, 24-in.; largest particle in product, 4-in.; rate of feed during test, 99.6 t.p.h.; average hp., 26.2 (decrease chart readings by 2.7 hp. for power draft of a conveyor driven by the same motor).

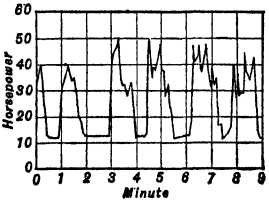

FIG. 31. Load curve of No. 8 Gates gyratory crusher.

Efficiency of primary gyratory crushers, based on estimates from the performances reported in Tables 15 and 16, are shown in Fig. 32. These figures are not to be taken too seriously on account of approximations that were necessary in calculation, owing to lack of sizing tests, and of integrated readings of energy consumption. The effect of underloading is clearly shown.

Fall through machine proper is about 10 times the gape for machines up to 12-in. gape. For larger machines the figure decreases with increase in gape from 8 to 6. Closer figures for fall are given in Tables 12, 13, and 14. These figures will come within a few inches of the exact ones for crushers made by any of the leading manufacturers.

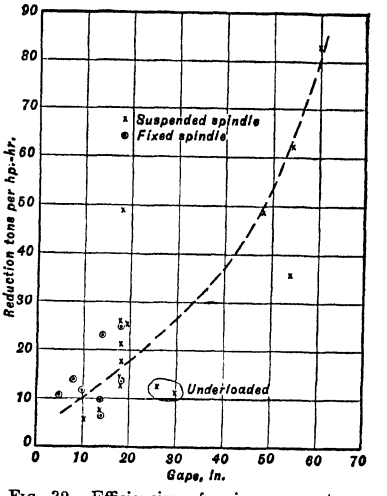

FIG. 32. Efficiencies of primary gyratory crushers; straight-element crushing surfaces.

Lost time. Average percentage of lost time in the mills due to causes chargeable to the crushers themselves, such as repairs and renewals, clogging and its attendant difficulties, is less than 1%. Renewal of mantles, concaves, and chute liners and rebabbitting of the eccentric bearing are the principal causes stated. One plant reported 8% lost time due to clogged chutes. In this plant a 12-in. crusher was discharging a product, a considerable proportion of which was more than 4 in. in size; an extremely large tonnage was being put through, and clogging was to be expected unless a large drop was allowed from the concaves to the highest point of the diaphragm. The majority of the crushers reported are planned to work but one or two shifts per 24 hr., thus leaving at least one shift free for all minor repairs. With good planning and with a sufficient supply of repair parts on hand, such operation will practically eliminate lost time.

Attendance. Usual practice is one man per machine to two or three machines per man. Where the gyratory crusher is the primary machine there should be an attendant for each machine to remove waste. Where the gyratory is a secondary crusher little or no actual attendance, apart from oiling and watching for trouble, is necessary.

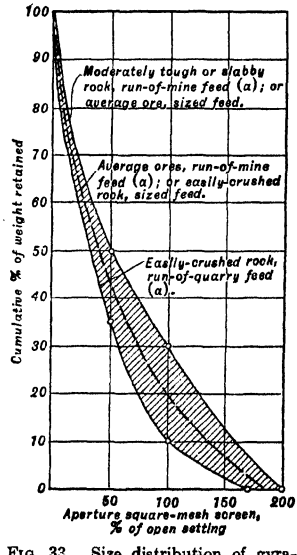

FIG. 33. Size distribution of gyratory-crusher product.

Crane service. See Sec. 20, Art. 12, for general discussion. A majority of the mills reporting had crane service to the gyratory crushers. Such service is universal for large machines.

Feeding. The crusher should be fed regularly and as nearly as possible up to capacity. Maximum capacities will be attained when the feed rate is completely and readily controllable, as is possible with some form of positive movable feeding surface with effective start-and-stop and speed controls. (See Sec. 18, Art. 22.) If the feed contains particles near the largest that can be received, it is wise not to bury the crusher, as bridging may easily occur and necessitate digging aside a lot of heavy material. However, bridging is much less likely to occur in gyratory crushers than in jaw crushers and many more of the former are fed so as to be buried. The majority of plants report the crushers fed by chutes or over stationary grizzlies. Other methods reported are by belt or pan conveyors, drum feeders, and shaking or vibrating grizzlies and chutes. Pan conveyors are probably the most satisfactory method for feeding initial crushers. Most of the chute-fed crushers occupy a secondary position in the mills, taking feed from a primary crusher.

Breaking point is not generally provided in modern gyratory breakers. The big breakers will pass almost any piece of steel that gets to them, without stalling or breakage. Small crushers will generally slip a belt before breaking, and, if the motor is properly safeguarded against overload, this is a fairly satisfactory method of procedure. In older crushers a breaking pin was provided in the driving pulley. Overload circuit

breakers are probably the best method of providing against damage with machines directly connected to a motor.

Size of product of primary gyratory with head and concaves having straight generating elements is dependent upon the breaking characteristics of the rock and upon the sizing analysis of the feed. Study of the rather sparse data available (*RI 3377, 3380; A-C, PC*) indicates that with nonslabby feeds all of the product will pass a square-mesh testing sieve of aperture equal 1.7 to 2.2 times the open setting of the crusher; 70% to 90% will pass a similar screen of aperture equal to the open setting; and from 35% to 50% will pass a similar screen of aperture equal to half the open settings. The higher percentages in both cases correspond to unsized, relatively friable feeds that break granularly. The size showing maximum weight is at or slightly greater than the open setting. Fig. 33 is reasonably safe for purposes of estimate.

4. COMPARISON OF JAW AND GYRATORY CRUSHERS

The bases of comparison for primary crushers are first cost, power and maintenance, on a capacity basis; operating labor will show no sensible difference except where the choice is between two primary jaw crushers and one primary gyratory, when the usual requirement of a tender on each primary machine will enter to the disadvantage of the jaw. Fig. 34 (*Courtesy Allis-Chalmers*) indicates the capacity basis for differences.

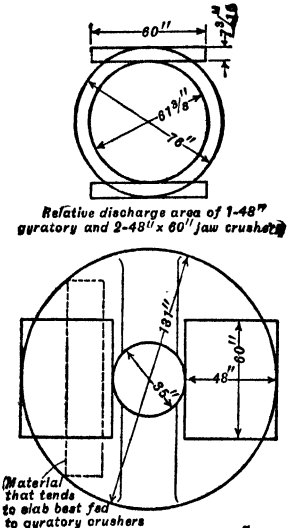

FIG. 34. Comparison of feed and discharge openings of jaw and gyratory crushers.

The elements of FIRST COST are the price of the machine itself and the costs of installation and housing. Table 17, which compares machines of average weights, shows, in line 13, that the gyratory costs, in general, from 29 to 7.% of the jaw per ton of hourly crushing capacity through a given reduction range, when both crushers are worked to capacity and machines of the same gape are available. INSTALLATION COSTS are substantially proportionate to the weights of the machines, but the gyratory, because of lesser tendency toward vibration, requires less costly foundations when installed high above the ground. HOUSING costs more for the gyratory on account of the requirement of much greater clear headroom above it to permit lifting out the spindle for replacing mantles; the gyratory also requires more vertical height below to permit dropping the bottom plate and removing gears and eccentric. What these excess requirements may amount to in dollars is a matter of individual design and estimate in each case and cannot be generalized. FEEDING ARRANGEMENTS will usually be simpler and easier to make with the gyratory, owing both to the fact that it can be fed from all sides and that the absence of mechanism at the top permits the crusher to be buried under the feed load, if desired, while the relatively great length of receiving opening gives better access of material to the crushing zone in case of bridging, so that the crusher clears itself to the point that ready access to the offending lumps is had with little or no manual labor.

EFFICIENCY: Line 19 (Table 17) shows that the size reduction done per unit of energy input is greater for the gyratory at all feed sizes, increasing generally with increase in feed size. This advantage is greater at underloads than at full loads. This flows from the fact, demonstrated by the work at WITHERBEE SHERMAN. Figs. 5, 30, and 31, that the POWER CONSUMPTION of a jaw crusher idling is roughly 45 to 50% of that at full load, whereas for the gyratory the corresponding figure is 30%.

MAINTENANCE is higher for the gyratory, both as respects material and labor. Gyratory crushing surfaces are not as readily sectionalized as jaw and cannot ordinarily be reversed, so that, even though the actual wear per ton crushed is probably not greatly different in the two types of machine, the rejections weigh more for the gyratory. Labor costs for changing the crushing surfaces in the gyratory will run several times those for the jaw. Eccentric-bearing and spindle wear in the gyratory are higher than the wear of corresponding surfaces in the jaw crusher because of the greater pressures under which these surfaces work, and the allowable wear before serious loss in crushing efficiency occurs is less with the gyratory.

Table 17. Comparison of jaw (*a*) and gyratory (*b*) crushers

Line	Crushing from — to — in. thickness of particle	6–1		8 1/2–2		10–2		14–3		20–4	
		J	G	J	G	J	G	J	G	J	G
2	Type of crusher										
3	Size of receiving opening, in.	7×10	7×56	10×20	10×90	12×24	12×90	18×24	16×120	24×36	26×200
4	Capacity, reduction tons per hr. (*c*)	25	100	97	300	149	400	238	800	590	1,700
5	Weight of machine, tons	3.6	9	15.5	18.5	33.5	20	43.4	50	78	80
6	Reduction tons per hr. per ton weight of machine	6.9	11.1	6.3	16.2	4.4	20	5.5	16	7.6	21.2
7	Price, cents per lb. (1939) (*d*)	25.0	27.0	21.0	22.2	15.0	19.6	14.4	18.4	12.7	17.5
8	Fall through machine, ft.	2.3	5.5	2.2	7.5	2.5	7.6	3.5	10.6	4.2	13.0
9	Price, dollars per hourly reduction ton	72	48.6	67.1	27.4	67.4	19.6	52.6	23.0	33.6	16.5
10	Price, dollars per ton of hourly jaw capacity	....	194.4	....	84.7	.....	52.6	.....	77.4	.....	47.5
11	Relative reduction tons per ton weight of crusher, G/J	1.6		2.6		4.5		2.9		2.8	
12	Relative price, G/J	2.7		1.3		0.8		1.5		1.4	
13	Relative price per ton of hourly capacity, G/J	0.68		0.41		0.29		0.44		0.49	
14	Relative capacity per dollar of price	1.5		2.4		3.4		2.3		2.0	
15	Approx. actual power, full load	6	10	12	30	17	35	25.5	65	42.5	100
16	Approx. actual power idling	2.7	3	5.4	9	7.7	10.5	11.5	19.5	19.1	30
17	Approx. actual average power, $K'' = 0.75$ (*e*)	5.2	8.5	10.4	24.8	14.7	28.9	22	53.7	36.7	82.5
18	Reduction tons per hp-hr., average	3.6	8.8	7.0	9.1	7.6	10.4	8.1	10.7	12.1	15.5
19	Relative reduction tons per hp-hr., G/J	2.4		1.3		1.4		1.3		1.3	

Line	Crushing from — to — in. thickness of particle	25–4		30–5		36–6		40–6		50–6	
		J	G	J	G	J	G	J	G	J	G
2	Type of crusher										
3	Size of receiving opening, in.	30×48	30×210	36×48	36×262	42×60	42×284	48×72	48×332	60×84	60×400
4	Capacity, reduction tons per hr. (*c*)	890	2,200	1,260	2,900	1,905	3,750	2,600	5,850	4,350	12,000
5	Weight of machine, tons	136	87.5	155	130	203.5	140	248.5	260	457.5	475
6	Reduction tons per hr. per ton weight of machine	6.5	25.1	8.1	22.3	9.4	26.8	10.5	22.5	9.5	25.2
7	Price, cents per lb. (1939) (*d*)	10.8	16.7	11.5	15.3	11.1	15.6	11.3	17.6	11.5	16.9
8	Fall through machine, ft.	5.0	13.5	6.2	15.2	7.2	16.5	8.0	19.5	9.5	31.0
9	Price, dollars per hourly reduction ton	33.0	13.3	28.3	13.7	23.6	11.7	21.6	15.6	24.2	13.4
10	Price, dollars per ton of hourly jaw capacity	.....	32.9	.....	31.5	.....	23.0	.....	35.1	.....	37.0
11	Relative reduction tons per ton weight of crusher, G/J	3.9		2.8		2.8		2.1		2.7	
12	Relative price, G/J	1.0		1.1		1.0		1.6		1.5	
13	Relative price per ton of hourly capacity, G/J	0.40		0.48		0.50		0.72		0.55	
14	Relative capacity per dollar of price	2.5		2.1		2.0		1.4		1.8	
15	Approx. actual power, full load	85	75	110	110	143	125	180	200	230	300
16	Approx. actual power, idling	38.3	22.5	49.5	33	64.4	37.5	81	60	104	90
17	Approx. actual average power, $K'' = 0.75$ (*e*)	72.3	61.9	95	91	123	103	155	165	198	247
18	Reduction tons per hp-hr., average	9.2	26.6	9.9	23.9	11.6	27.3	12.6	26.6	16.9	60.7
19	Relative reduction tons per hp-hr., G/J	2.9		2.4		2.4		2.1		3.6	

a Standard Blake-type with straight-element crushing surfaces. *b* Short-shaft suspended-spindle slow-speed primary type with straight-element mantle and concaves.
c See p. 13. *d* Manganese-fitted. *e* See p. 13.

CHARACTER OF FEED: The jaw crusher, since it is capable of a larger throw than a gyratory, is, when so adjusted, the better adapted to handle clayey and spongy rocks. (But with such feeds the single-roll crusher (see Art. 5) or the hammer mill (Art. 9) should be investigated.) Slippery rock that tends to jump out of the crusher when the crushing force is applied is best handled in a jaw crusher, simply as a matter of design, since the larger gyratories are usually built with nip angles 4 to 6° larger than jaw crushers of corresponding gapes. Because of the very great force which the toggle mechanism can transmit, the jaw crusher can be built to handle certain extremely hard artificial products, such as ferrotungsten and other ferroalloys. The jaw crusher is capable of more ADJUSTMENT OF SET without serious structural changes than the gyratory, and likewise may be somewhat adjusted as to THROW without change of eccentric, which is substantially impossible with the gyratory. The jaw permits, therefore, more flexibility in primary crushing to adapt to changes in feed and to alter the burden on the secondary crushers. LUBRICATION is better on the gyratory

If any general rule governing CHOICE may be enunciated, it is that for handling quantities of primary feed that are within the capacity of one jaw crusher, when the gape requirements would necessitate a gyratory of considerable excess capacity, and when future expansion of capacity is not a factor in the problem, a jaw crusher is probably the better choice. Practice is roughly summarized in the rule: If the hourly tonnage to be crushed divided by the square of the gape in inches is less than 0.115, use a jaw crusher; otherwise, a gyratory. On the other hand, the table indicates that for feeds in the range 24 to 36 in. thickness the prices of jaw and gyratory are substantially the same, while the gyratory has more than double the capacity of the jaw, and, even if run at the jaw capacity and charged with the correspondingly large amount of idling energy, relative reduction tons per hp-hr. for the gyratory will be about 1.8 times that of the jaw.

With an ore, the bulk of which is too hard for single-roll or hammer mills, but which contains such a large amount of clayey material that it clogs a jaw or gyratory breaker despite the usual expedient of flushing, preliminary washing in blade mills or wash trommels (see Sec. 10) is desirable. If the material is too coarse for such machines, a primary crusher, probably of the jaw type, with a wide set and a large throw, may be used to crush the undesirable oversize after separation on a grizzly; whereupon the crushed material recombined with the grizzly undersize may be washed prior to further reduction. At GETCHELL MINE drying was adopted with a very clayey ore.

Shepard (*RI 3380*) found, in a comparative test of jaw and gyratory crushers set at 7 1/2-in. and 5 3/8-in. open setting respectively, that the gyratory product contained less material larger than the open setting, and less fines, with correspondingly higher percentages at and near the size of the crusher setting, despite the fact that the mean reduction ratio was greater in the gyratory. Shepard's tests also indicate no difference between the crushers as regards shape of the product particles, departure from the equidimensional particle increasing both ways from a size near the crusher setting, and being greater the greater the reduction ratio in the crushing operation.

5. SLEDGING ROLLS

Sledging rolls (not to be confused with crushing rolls, Art. 8) are machines in which one (single-roll crusher) or two massive rolls (giant rolls, slugger rolls), armed with heavy projecting knobs or teeth, and set horizontally, break rock fed onto them by spalling and pinching.

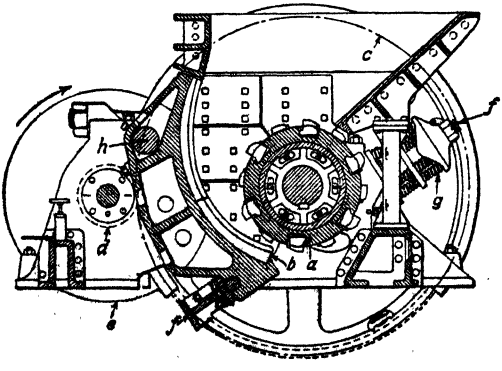

FIG. 35. Single-roll crusher.

Single-roll crusher (Fig. 35) consists essentially of the single toothed roll *a* and the stationary breaking plate *b*. The roll is driven by gear *c* and pinion *d* by means of a belt and drive pulley *e*. The breaking plate, hinged on *h*, is held in position by two heavy bolts *f*, one on each side, with a nest of compression springs *g* under the upper nuts to permit the plate to move away when an unbreakable substance is fed. Machines are built with roll diameters 18-in. to 60-in. and lengths from 1 1/2 to 3 times the diameter

and are operated at peripheral speeds of 200 to 300 f.p.m. The feed hopper of the large machines will take shovel-size rock.

Drive is normally by belt to an extra-heavy flywheel-type pulley from a motor, and thence through single-reduction gearing to the roll. Encased gears running in oil and direct connected to a motor through flexible coupling are available.

Wearing parts are made of chilled iron or manganese steel. Roll shells are made segmental with teeth cast integral, or entire with either integral or separate bolted alloy-steel teeth. Unless wear is excessive the entire shell with integral teeth is most satisfactory, as it eliminates trouble with loose teeth and also difficulty with rusted holding bolts. Teeth may be built up by hard facing. Compensation for partial wear is made by shimming up the breaker plate.

Frame is made of ribbed cast-steel sections, with accurately surfaced joints and strongly bolted. Bearings for all shafts are massive, are cast integral with the side sections, bushed with bronze, and designed to take up end thrust.

Breaking principle. The larger lumps are broken by the spalling action of the heavy teeth striking projecting parts of the lumps in contact with the roll surface. This action may be accentuated by making the teeth of different heights. Smaller lumps in the convergent zone between roll and anvil plate are sheared by the teeth and compressed to failure between the crushing surfaces. Positive agitation of the material in the crushing zone by the action of the teeth facilitates sifting through of fines and tends to decrease compacting and choking.

The machine will free itself if fed in surges, but the roll teeth tend to wear badly under the overlying load, and it is better practice not to bury it, but to use some form of regulating feeder.

Manufacturers. Allis-Chalmers Mfg. Co., Austin-Western Road Mach. Co., Bartlett & Snow Co., Dixie Mach. Co., Gruendler Crusher & Pulverizer Co., Jeffrey Mfg. Co., Kennedy-Van Saun Mfg. & Eng. Corp., Link-Belt Co., McLanahan & Stone Corp., Pennsylvania Crusher Co., Raymond Pulverizer Co., Stephens-Adamson Mfg. Co., United Iron Wks., Vulcan-Iron Wks.

Field. Single-roll crushers are particularly adapted to primary breaking of the large class of substances of which the medium and soft limestones, phosphate rocks, shales and other nonabrasive sedimentary deposits, slates, hard clays, and the like are representative. They operate best on thinly stratified rocks. The forced discharge is definitely helpful with sticky clays. They are superior to either jaw or gyratory crushers for wet or frozen slippery materials, provided these are not too tough or abrasive. They should not be used for abrasive material or when the crushing resistance exceeds about 15,000 lb. per sq. in.

Capacity varies tremendously with size of feed and its nature and with the crusher setting. The range is from 50 to 1,500 t.p.h. Stone too large to be nipped between roll and anvil plate may ride the roll for a considerable time before it is spalled down to a size that will nip, and a collection of such pieces has the substantial effect of a choke-up in the receiving hopper.

Table 18, compiled from data supplied by one manufacturer, gives figures for estimate. The following per-

Table 18. Data for single-roll crushers (manufacturer's catalogue)

Size of crusher, diam. × length of roll, in.	24×48				24×60				36×60				60×84		
Feed, max. thickness, in.	14	14	12	12	14	14	12	12	24	24	20	20	16	16	40	40
Ring size of product, in.	4	6	4	6	4	6	4	6	6	8	6	8	6	8	10	14
Capacity, tons per hr. *a*	115	175	130	200	145	215	165	250	250	325	300	400	375	500	500	1,500
80% reduction ratio *b*	4.8	3.2	4.1	2.7	4.8	3.2	4.1	2.7	5.4	4.1	4.5	3.4	3.6	2.7	5.4	3.9
Reduction tons per hp-hr.	552	555	533	540	696	688	677	675	1,350	1,333	1,350	1,360	1,350	1,350	2,700	5,850
Installed hp. recommended	100	75	75	75	125	100	100	100	200	200	200	200	200	200	300	400
Reduction tons per hp-hr., aver. *c*			14.6				13.6				13.6				18 to 29.2	
R.p.m. roll			58				58				39				23	

a Limestone.
b Shape factor assumed 1.7; 80% size of product assumed equal to ring size. See p. 09.
c Based on assumption that mean full-load power draft is 50% of peak.

formance data indicate that the manufacturer's figures are safe as to tonnages and rather conservative as to motor recommendations.

Performances on several different rocks are given in Table 18*A*.

At MALVERN CLAY CO. (*IC 6962*) an 18×30-in. roll driven 40 r.p.m. by a 30-hp. motor crushed 100 t.p.h. of hard clay to a maximum size of 4 in. At CLAY CITY PIPE CO. (*IC 6913*) a similar roll driven 50 r.p.m. by a 25-hp. motor crushed 60 t.p.h. of flinty clay to 6-in. maximum size. At CAMP BROS. CO. (*IC 6889*) a 24×42-in. roll driven 245 f.p.m. peripheral speed by a 40-hp. motor crushed 90 t.p.h. of hard clay to 6-in. maximum size. At VICTOR PLASTER, INC. (*IC 6967*) a 21×40-in. roll set at 1 1/4 in. and driven at 50 r.p.m. by a 75-hp. motor crushed 60 t.p.h. of interbedded shale, gypsum, and limestone. A 60×84-in. machine crushing limestone at MICHIGAN ALKALI CO., driven 23 r.p.m. by a 400-hp. motor and set for a 7-in. product, crushed 700 t.p.h. of 4×7-ft.-maximum shovel rock. *Miller* rates a 36×60-in. machine set for 6 to 8-in. limestone at 350 t.p.h.

Table 18*A*. Performances of single-roll crushers (*Courtesy Pennsylvania Crusher Co.*)

Material	Gypsum rock		Cement rock	Limestone	Elkhorn bituminous
	Michigan	New York			
Compressive strength, thousands lb. per sq. in.	6 to 8	8 to 12	12 to 15	5 to 6	2 to 4
Machine					
Size, diam. × length, in.	30×72	21×42	36×60	36×60	24×30
Speed, r.p.m.	40	30	38	40	60
Motor, hp.	150	75	300	150	75
Operation					
Feed: Tons per hr.	400	125	300	300	125
Size, in.	<36	<20	<36	<30	20–5
Product, size, in.	<6	*a*	<8	<4	*a*
Power consumed, hp., crushing	80	50	180	60	47.5
Idling	30	15	40	25	8
Maintenance, ¢ per ton	0.05 *e*	0.10 *e*	0.10 *e*	0.05	0.10
Derived data					
80%-size: Feed *b*	29	16	29	24	20
Product *c*	3.6	1.4	4.8	2.4	0.38
Reduction ratio, R_{80} *d*	8.0	11.4	6.0	10.0	53
Reduction tons per hr.	3,200	1,425	1,800	3,000	6,630
Reduction tons per hp-hr.	40	28.5	10	50	140

a See upper full curve, Fig. 35*A*.
b Taken as 80% of limiting size when limiting size only given.
c Taken as 60% of limiting size when limiting size only is given. See Fig. 35 4.
d See Eq. 5. *e* Estimated.

Size of product. Shepard and Witherow (*RI 3377*) found that all of the product of a single-roll crusher breaking limestone passed a square-mesh testing screen with an aperture equal twice the crusher setting, 20 to 25% remained on a square-mesh testing screen equal the setting, and 30 to 40% passed a testing screen of half the setting, the coarser product with sized feeds. Reduction ratio (80%) with run-of-quarry feed was about 3.3 and was about the same as in a gyratory handling the same feeds. With softer feeds Table 18*A* indicates reduction ratios much larger, ranging from 6 with cement rock to 53 for bituminous coal. Characteristic sizing curve of product is given in Fig. 35*A*.

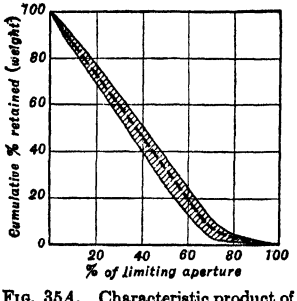

FIG. 35*A*. Characteristic product of single-roll crusher.

Power consumption. *Miller* states that power draft, while fluctuating, shows overloads of short duration and magnitude rarely exceeding twice the mean. Table 18*A* shows idling power to range from 17 to 42% of loaded power and loaded power equal to 40 to 65% of full-load power. Reduction tons per hp-hr. are much larger than with jaw and gyratory, owing, of course, to the much softer rocks crushed.

Giant rolls (slugging rolls) consist essentially of a pair of massive knobbed cylinders, similar to the single-roll, mounted on a massive frame with shafts parallel and in a horizontal plane. They are driven toward each other at the top. The projecting teeth strike spalling blows on lumps riding in the inter-roll vee, and also serve to decrease the nip angle (see Art. 8) and thus bring about seizure of lumps that would not be nipped by smooth-surfaced rolls of the same diameter and set. Roll diameters range from 3 ft. to 6 ft. and

lengths up to 5 ft., so that they can take almost any shovel rock. They are set to discharge at 4 to 8 in., according to the size of feed. Practice as to speed, with the resulting limitations imposed on the drive, results in two distinct types of machine. Slow-speed sledgers, driven 12 to 20 r.p.m., depend primarily on nipping and compression for their crushing action. All of the teeth project a relatively great distance from the roll face, to the point of actual intermeshing in certain cases, and are so arranged always that a longitudinal row of teeth on one roll face registers with untoothed surface on the other roll in the plane of the shafts. Such registry necessitates gear interlocking of the two rolls, while the slow speed requires further gear reduction from the driving pulley to the roll shaft. High-speed giant rolls are driven at 3,000 to 3,500 f.p.m. peripheral speed, usually by separate motors belted to heavy flywheel-type pulleys. Two rows of teeth at 180° on one roll project well beyond the other teeth and act as sledges to crack or quickly spall down large lumps to a size that can be nipped.

Construction is massive throughout. SHAFTS are high-carbon or alloy steels, of large diameter; bearings are of generous proportions, with forced lubrication; SIDE FRAMES are heavily ribbed castings of high-test iron or steel, or are fabricated of heavy rolled shapes and plates. The BEARINGS of one or both rolls are slideable in the frames. They are spaced by shimming. Crushing stresses are taken up by heavy steel TIE RODS, running completely through the frame lengthwise on each side, both above and below the bearings, in some makes buttressed against nests of compression-type SPRINGS. CORES are cast-iron cylinders, sectioned transversely, shrunk onto the shaft. SHELLS are usually chilled iron or manganese-steel segments, cast with integral teeth, with lugs or machined tongues fitting into corresponding depressions in the core surfaces, which are suitably flattened to receive the shell segments.

Performance. Slow-speed rolls are used principally in Germany, crushing limestone for cement manufacture and fluxing stone. *Miller* states that a 5×5-ft. machine will break 200 to 300 t.p.h. of shovel-size stone to <10-in. with a consumption of 150 to 200 hp. High-speed giant rolls were introduced by Edison into a number of cement plants and into a few ore-milling plants in the United States but are not now used in any of the latter, nor in few, if any, of the former. Recent installations are reported (*136 Eng 436*) for sticky, slippery relatively friable iron ores in England. A 60×54-in. machine crushed 400 t.p.h. of such rock from <48-in. to <8-in. with a power draft of 100 to 150 hp. per roll (200 to 300 hp. total). The manufacturer estimates that a 72×60-in. machine will crush 450 to 1,000 t.p.h. of such rock from 54×48×36-in. maximum to <8-in.

Size of product. *Miller* gives curves which indicate that approximately 10% of the product of high-speed rolls is coarser than the nominal set and that the average size distribution up to this point is substantially straight-line, limestone crushing somewhat finer than ironstone.

INTERMEDIATE CRUSHING

INTERMEDIATE (or SECONDARY) CRUSHING comprises the series of steps in the usual comminution process that intervenes between primary crushing and grinding. In some operations, *e.g.*, production of crushed stone or domestic anthracite, secondary crushing is the final stage in comminution; very occasionally secondary crushing and final grinding constitute one and the same step. Primary-crusher discharge will vary from, say, 3-in. up to 10- or 12-in. maximum, according to the mining method and the tonnage; grinding-mill feeds will vary from, say, 1-in. to 10-m. maximum, according to the judgment of designers as to the significance of the data available on the comparative economies of crushing and grinding over the range from 1-in. to 10-m. Hence the ratio of reduction to be effected in intermediate crushing may range in the extreme from 3 : 1 to 150 : 1; the number of stages ranges from one for the small ratio to as many as five or six for the large; the most usual number of stages in flotation and cyanide mills is two; gravity-concentration mills normally use more.

Principles. The desiderata in intermediate crushing are: (*a*) maximum economic reduction ratio per stage, in order to reduce fall, number of machines, amount of material transport, floor space, and building cubage; (*b*) large unit capacity per machine, which has much the same advantages as *a;* (*c*) low energy consumption; (*d*) low recurrent maintenance cost; and (*e*) reasonably high continuity of operation. The essential specifications of a machine to satisfy these demands are: a receiving opening large enough to take feed easily, with no tendency to choke or clog, lacking continuous attendance; a nonchoking crushing zone with sufficient retention of material therein to insure reasonable size reduction before discharge; a discharge passage of as large an area as is consistent with the size reduction demanded; as great a force as possible working to facilitate movement of material through the crushing zone and discharge of the crushed material; adequate crushing force and adequate area over which to apply it, with as nearly continuous application as possible; an efficient mechanism for converting rotary driving force to rectilinear crushing force; relatively high speed of application of crushing force; an efficient lubricating system, including cooling, if necessary; low wear of crushing surfaces and such design thereof that

replacement is infrequent and convenient to make; sufficient strength to withstand strains induced by accidental introduction of uncrushable material or a stalling load, and means for promptly freeing such material from the crushing zone; sufficient weight to prevent harmful vibration. It is usually essential in the final stage, and it is desirable in preceding stages, that the discharged product have a substantially uniform maximum size; failure in this respect may, however, be compensated by a separate sizing device.

Types of crushers. Machines now used in secondary service are gradual-pressure machines and impact machines. In the first class are the gyrators and rolls; in the second the hammer mills and stamps. Fast-running open-end rod mills of large diameter (Sec. 5, Art. 7) are also employed for the final stage in some well-designed plants.

The GYRATORS include the so-called reduction gyratories, cones, Gyraspheres, and disk crushers. One or another of these (excluding the disk, which is substantially obsolete) is found in the first intermediate stage in well upward of 90% of all hard-rock crushing plants. The cone predominates. Rolls and short-head cones predominate in the final intermediate stage in such plants, rolls being favored when the final product is relatively fine, cones when it is on the coarse side. Hammer mills are widely used for softer rocks. Stamps, when they are found today, have some very special reason behind their use, such as mass copper in the Michigan mills or the fact that they were installed before the development of modern fine-grinding equipment in the older cyanide plants, and could be converted to intermediate crushers serving tube mills, when these were installed, more cheaply than modern intermediate crushers could be put in.

6. REDUCTION-GYRATORY CRUSHER

The modern form of reduction gyratory should not be confused with the short-head modification of the standard gyratory that preceded it. The present machine, which is made in a variety of forms, constitutes a creditable attempt to satisfy the desiderata set up in the immediately preceding introductory paragraphs. It has the tested and proved frame and essential mechanism of the primary suspended-spindle gyratory. In order to maintain capacity in the face of the reduction in width of discharge opening necessarily incident to finer crushing, the convergent crushing zone is flared downward, thus increasing the length of discharge opening; speed is increased, thereby increasing the number of crushing impulses per unit area of crushing surface per unit time; concaves are curved, and the mantle may or may not have a curved face, thus gaining the nonchoking advantage explained in Art. 2; and, as an important incident to the combination of slowly convergent fine crush-

Table 19. Reduction-gyratory data

Size, approx. diam. at base of head	Gape, in. effective	Eccentric throw *a*	Approximate hourly capacities to closed settings stated, in., and corresponding											
			Size	Tons	T_R	T_R hp-hr.	Size	Tons	T_R	T_R hp-hr.	Size	Tons	T_R	T_R hp-hr.
20 in.	4 1/2	S	1/4	10	106	10.6	3/8	14	98	9.8	.....	.....	.....	.....
	4 1/2	L	3/8	15	106	10.6	1/2	20	106	10.6	5/8	25	106	10.6
24 in.	4 1/2	S	3/8	30	212	13.0	1/2	34	180	11.0	5/8	37	157	9.7
28 in.	5 1/2	S	3/8	47	405	16.9	1/2	53	343	14.3	5/8	58	300	12.5
	9	S	3/8	39	550	22.9	1/2	45	478	19.9	5/8	50	423	17.6
	9	L	1/2	56	593	24.7	5/8	62	525	21.9	3/4	68	481	20.0
3 ft.	7	S	3/8	52	572	15.3	1/2	64	527	14.1	5/8	70	462	12.3
	7	L	1/2	92	759	20.2	5/8	99	653	17.4	3/4	105	577	15.4
	12	S	3/8	43	810	21.6	1/2	57	803	21.4	5/8	63	703	18.8
	12	L	1/2	82	1,160	31.0	5/8	90	1,020	27.2	3/4	97	912	24.3
4 ft.	10	S	3/8	86	1,350	24.1	1/2	93	1,095	19.6	3/4	111	870	15.6
	10	L	1/2	104	1,222	21.8	5/8	113	1,062	19.0	3/4	122	957	17.1
	16	S	5/8	92	1,385	24.7	3/4	102	1,280	22.9	1	120	1,130	20.2
	16	L	3/4	128	1,603	28.6	1	148	1,392	24.9	1 1/2	178	1,107	19.7
5 ft.	15	S	1/4	104	3,665	48.9	1/2	124	2,170	29.0	3/4	155	1,825	24.4
	15	M	5/8	150	2,115	28.2	3/4	162	1,907	25.4	1	185	1,633	21.8
	15	L	3/4	218	2,565	34.3	1	244	2,155	28.7	1 1/2	298	1,753	23.4
6 ft.	20	S	3/4	315	4,930	49.3	1	343	4,025	40.2	1 1/2	390	3,050	30.5
	20	M	1	436	5,125	51.2	1 1/2	468	3,765	37.6	2	490	2,870	28.7
	20	L	1	560	6,570	65.7	1 1/2	618	4,820	48.2	2	658	3,860	38.6
7 ft.	25	S	3/4	405	7,930	52.9	1	435	6,400	42.7	1 1/2	489	4,780	31.9
	25	M	1 1/2	725	7,110	47.5	2	780	5,740	38.3	2 1/2	820	4,820	32.1
	25	L	1 1/2	890	8,720	58.2	2	965	7,090	47.3	2 1/2	1,015	5,950	39.7

a S = short throw; L = long throw; M = medium throw.

ing zone thus obtained and the higher speed, which insures two or more pinches of particles at substantially the closed setting, it may be given a greater throw than can the slower-moving primary type, thus increasing the discharge area, without undue increase in maximum size of product.

Standard (coarse) machine. Fig. 36 shows a typical machine of the reduction type for settings down to 3/8-in. and products of < 3/4- or 1-in. limiting size. The machine involves minimum departure from the structure of the primary-type gyratory. The frame, suspension, and driving mechanism are of the usual suspended-spindle short-shaft type (Art. 3), except that the discharge diaphragm is omitted. Belt, Tex-rope, or flexible direct-connected drives are available. One manufacturer (*131 J 330*) suspends the spindle-supporting nut on one end of a heavy simple lever, with fulcrum on one side of the shell, and the other end of the lever held down by an adjusting screw backed by heavy springs. Highly desirable provision is thus made for protection against overload and tramp iron and for adjustment of setting during operation.

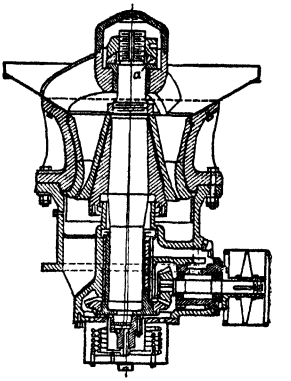

FIG. 36. Standard (coarse) reduction-gyratory crusher.

Size rating is in terms of the diameter of the head at the discharge point; the range in available sizes is 20-in. to 7-ft. The effective gape varies with a given size of machine according to the head and concaves with which it is fitted; it varies from about 1/7 to 1/5 the head diameter for fine bowls and 1/6 to 1/3 for coarse bowls. Eccentric throw will be varied by the manufacturer on a balance between the requirements for capacity and the limiting size for a given closed setting. Speeds are much higher than in standard gyratories. Estimating data are given in Table 19.

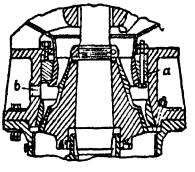

FIG. 37. Crushing zone of Traylor-Stearns multistage reduction gyratory.

Fine-reduction gyratory is on the market in two forms. One comprises essentially the mechanism of Fig. 36, but the breaking head is divided into an upper and a lower crushing section (Fig. 37) by a depressed section, and the concaves are in two vertically separated parts; the effect of this construction is to provide two distinct crushing zones, respectively coarse- and fine-crushing. Provision is made, by means of the suspended

from manufacturers' catalogues

reduction tons (Art. 2) and efficiencies (Art. 2)								Averages		Speed, max. gyrations per min.	Installed hp., aver.	Weight, lb.
Size	Tons	T_R	T_R hp-hr.	Size	Tons	T_R	T_R hp-hr.	T_R	T_R hp-hr.			
.....	.....	.....	.....	.....	.....	.....	.....	92	4.6	300 to 360	20	8,000 to 13,000
3/4	30	106	10.6	.....	.....	.....	.....	106	5.3			
3/4	41	144	8.9	1	46	122	7.5	163	5.0	270	32.5	17,200
3/4	63	271	11.3	.....	.....	.....	.....	330	7.0	300 to 360	48	15,000 to 20,000
3/4	55	388	16.2	1	63	334	13.9	435	9.0			
1	78	413	17.2	1 1/2	91	321	13.4	467	10			
3/4	75	412	11.0	1	83	343	9.2	463	6	250 to 300	75	28,500 to 40,000
1	117	481	12.8	.....	.....	.....	.....	618	8			
3/4	69	650	17.3	1 1/2	92	432	11.5	680	9			
1	111	783	20.9	1 1/2	133	625	16.6					
1	129	758	13.5	1 1/2	135	529	9.4	920	8	200 to 250	112	50,000 to 73 000
1	139	818	14.6	1 1/2	170	667	11.9	945	8.5			
1 1/2	146	917	16.4	2	163	767	13.7	1,096	10			
2	197	926	16.5	.....	.....	.....	.....	1,257	11			
1 1/2	191	1,233	16.5	2	213	940	12.5	1,967	13	185 to 200	150	128,000
1 1/2	233	1,370	18.3	2 1/2	266	938	12.5	1,593	10.5			
2	329	1,452	19.4	2 1/2	340	1,272	17.0	1,839	12			
2	418	2,450	24.5	.....	.....	.....	.....	3,614	18	175 to 200	200	175,000 to 187,000
2 1/2	506	2,380	23.8	.....	.....	.....	.....	3,535	17.5			
2 1/2	678	3,180	31.8	.....	.....	.....	.....	4,608	13			
2	529	3,985	26.6	.....	.....	.....	.....	5,774	19			
.....	.....	.....	.....	.....	.....	.....	.....	5,890	19.5	165	300	374,000
3	1,055	4,190	28.0	.....	.....	.....	.....	6,488	22			

backing ring *a*, to vary the setting of the upper crushing zone in such a way as to equalize the crushing duty between upper and lower zones. Hand-holes *b* permit observation of the intermediate feed zone. Provision is made to drop the spindle sufficiently, in case of a jam, to free the crushing zone; incidental access to the intermediate zone is possible through the hand-holes. The manufacturer gives test figures indicating a product with limiting size equal upward of 2 times the closed setting, and power and tonnage figures corresponding to 3 to 4.5 reduction tons per hp-hr. on trap rock.

Another fine-reduction machine is also of short-shaft type, but the spindle is bottom-supported on the upper end of a piston set in a cylinder bolted to the lower shell. Oil, pumped in through a branched valved pipe, serves to lift the spindle and breaking head to the desired setting; an automatic release valve on the cylinder acts as relief for choking overloads or when uncrushable material enters; manual release is supplied for intentional back-off. The breaking head is conical but more widely flared than in the standard reduction machine; concaves are curved. Throws are $^{7}/_{16}$-in. in the smaller machines with fine settings and range up to $^{7}/_{8}$-in. in the larger machines used for $^{7}/_{8}$-in. minimum set.

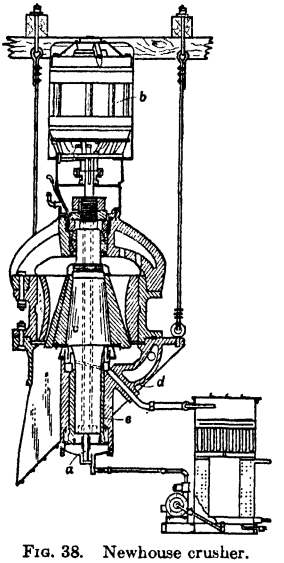

FIG. 38. Newhouse crusher.

Newhouse crusher (Fig. 38) is a high-speed short-shaft suspended-spindle gyratory with straight-faced head and curved concaves. Power is applied to the eccentric *e* by means of a shaft *a* which is, essentially, an extension of the rotor of the driving motor *b* through a tubular spindle *c*. The preferred mounting is by means of cables, as shown, which absorb the vibration incident to the high speed of gyration. The discharge diaphragm *d* is preferably omitted with sticky ores. Speeds are 500 to 600 r.p.m. with an eccentric throw of about $^{1}/_{4}$ in. For a given effective gape the machine runs from 10 to 15% lighter than the gear-driven reduction gyratory. Rated capacities and reduction tons per hp-hr. fall within the ranges given in Table 19; performance data available do likewise.

Gearless reduction gyratory has the characteristic curved crushing surfaces of the typical reduction machine but is of long-shaft suspended-spindle type and is driven by either a horizontal pulley or a built-in vertical-type slow-speed synchronous motor positioned on the lower end of the spindle. The spindle is hung from the suspension-bearing nut by a nest of heavy springs which relieves excessive load on the machine incident to the entry of unbreakable material.

Fixed-spindle type of gyratory is also modified for fine-reduction service. It is not recommended by the maker for as fine settings as the suspended-spindle machines of corresponding gape and weight, nor are the stated capacities to a given setting as large. The direction of motion of the head does not give favorable load application in the strongly flared bowl.

Manufacturers. Allis-Chalmers Mfg. Co., Kennedy-Van Saun Mfg. & Eng. Corp., Smith Eng. Wks., Traylor Eng. & Mfg. Co.

Structural data for reduction gyratories correspond, in general, to those already given for standard primary machines, *i.e.*, cast-steel shells and spiders, forged high-carbon or alloy-steel shafts, chilled-iron or manganese-steel wearing surfaces, and forced circulation of oil through channels in the eccentric bearing, gear housing, etc., from and to a reservoir fitted with a cooling coil.

One manufacturer makes the upper section of the shell reversible so that the concaves, zinced in place therein, may be reversed without dismounting.

Performance data for reduction gyratories are not available in sufficient number for reliable generalization, but on the basis of 10 to 20 incomplete reports for the smaller machines of several types, the reduction tons per hr. fall reasonably close to the averages in Table 19; reduction tons per hp-hr. are somewhat lower than the averages estimated in Table 19. Table 19*a* is based on reports from Traylor Eng. & Mfg. Co.

Size of product. Reduction gyratories in typical fine-reduction service, *i.e.*, with fine bowls and closed settings of $^{1}/_{2}$ in. or less make products all of which will pass square-mesh screens of aperture equal to 2 to 3 times the closed setting; 50 to 60% of the product is finer than the closed setting; and 15 to 35% is finer than half the closed setting. In coarse intermediate service the product tends to be more like that of the primary gyratory. In the usual types throw has relatively little effect on product size, if speed is in the range recommended. But the Newhouse crusher, which operates normally at higher speeds and with

Table 19*a*. Performances of Traylor reduction gyratories (*Courtesy Traylor Eng. & Mfg. Co.*)

Type	Type TY								Multi-stage (Fig. 37)					
Material crushed	Lime-stone	Trap-rock	Hard gravel	Chrome ore	Gold ore	Quartz ore	Lime-stone	Granite	Lime-stone	Traprock	Lime-stone	Gan-ister	Hard gravel	Traprock
Size of crusher, in.	15	15	20	20	28	28	36	36	20	20	28	28	36	36
Closed setting, in.	5/16	1/4	5/8	1/4	5/8	1/2	5/8	3/8	1/4	5/16	5/16	3/16	9/16	3/8
Feed rate, t.p.h.	9	12	33	45	60	55	110	63	19.5	20	48	40	113	72
Power consumed, hp.	11	20	32	25	48	30	50	52	12.5	15	20	25	100	47
Size of feed, in.	3~1 1/2	<2 1/4	<2 1/2	4~1	<2 1/2	4~2	<4	2 3/8~9/16	1 3/4~1/2	2 1/2~1 1/4	<2 1/4	<2	2 1/4~1 1/4	2 1/2~1 1/4
Product, size:														
1-in.							17						4.5	6
3/4		1	6		18	11	19	4			3		8.1	10
1/2	18	4	32	4		36	19	22	43	5	19	1	42.3	30
3/8	27	19	25	10	51	19	9	18				5		21
3-m.		28				13	8	16	21	29	23	13	27.3	16
4	25		21	5			8	19	11	20	9	16		
8	7			11					10	20	17	19		
10		31				14						6		11
20	8	7		19		3			9	14	15			2
48	5	6		31								22		
65														
100	1			11		2			3	8	7			2
<last	9	4	16	9	31	2	20	21	3	4	7	18	17.8	2
Derived data														
80%-size: Feed *a*	2.4	1.4	1.5	3.2	1.5	3.2	3.2	1.9	1.4	2.0	1.4	1.2	1.8	2.0
Product (Eq. 4)	0.47	0.40	0.64	0.17	0.73	0.69	0.96	0.57	0.75	0.38	0.53	0.25	0.71	0.72
Reduction ratios:														
R_L (Eq. 1)	4.0	2.8	2.5	5.3	2.0	4.0	2.7	2.4	1.8	3.3	2.2	4.0	1.8	1.7
R_W (Eq. 3)	5.6	5.3	2.4	9.4	2.4	4.7	3.8	3.7	4.0	4.7	4.2	6.3	2.4	3.9
R_{80} (Eq. 5)	5.1	3.5	2.3	18.8	2.1	4.6	3.3	3.3	1.9	5.3	2.6	4.8	2.5	2.8
Reduction t.p.h. (Eq. 8)	46	42	76	846	126	253	363	208	37	106	125	192	282	202
Reduction tons per hp-hr	4.2	2.1	2.4	33.8	2.6	8.4	7.3	4.0	3.0	7.1	6.2	7.7	2.8	4.3

a Estimated at 60% of limiting size for long-range feeds, and at 80% of limiting size for short-range sized feeds, on basis of Figs. 15 and 33.

smaller throws, may yield as high as 80% finer than the closed setting, with a limiting size slightly less than twice the closed setting.

Capacity is much greater per unit of discharge area than that of primary gyratories because of high speed and the relatively large throw and correspondingly large ratio between open and closed discharge areas. The high speed and large throw cause the breaking head to act to accelerate travel of material in much the way that a shaking conveyor acts, while the greater the difference between closed and open settings, the more unhindered the outflow of broken material when the head recedes. The fact that this difference decreases for a given machine as the setting increases, and becomes relatively small at the larger settings, explains the apparent anomaly in maker's ratings, according to which tonnage increases more slowly than the increase in setting, and the reduction tons per hour for a given machine are definitely lower at the larger settings.

7. CONE-TYPE CRUSHERS

The cone-type crusher (Fig. 39) differs from the gyratory as modified for fine reduction (Art. 6) in two important particulars: (1) The breaking head of the cone-type crusher flares much more rapidly, the depth of head being only about one-third its diameter at the base; (2) the throw of the head for a given closed setting ranges from 5 to 9 times the setting as against about 1 : 1 in the standard reduction gyratory. There are also two important differences in mechanism. The head is supported on a spherical bearing, and its eccentric is much longer than that of the gyratory, with the result that pressures per unit of sliding surface are substantially lower.

The difference in shape of head gives the cone-type machine greater discharge area for a given gape and setting than is found in the modified gyratory, and it makes the volume of the fine-crushing zone larger, relative to the volume of the coarse-crushing zone; the large throw causes the passage for the crushed material to be suddenly greatly enlarged, which permits the mass to become loose and fluid and thus to flow readily, and this loosening is accelerated by the fact that the receding head on the opening stroke drops away from under the mass of rock, permitting a short free trajectory as in a shaking launder. The result of these two aids to travel is faster movement through the crushing zone. At the same time the speed of the head is high enough to pinch all particles at least twice during their passage through the fine-crushing zone, so that discharge size is still determined by the fine setting.

Standard cone is shown in Fig. 39. The main frame comprises a cylindrical shell *a* within which and supported therefrom by suitable heavy fins cast integral is another cylindrical casting or hub *b*, which in turn supports socket *c*, fastened thereto by capscrews, and the bearing for eccentric *d*. The socket has a hemispherical bronze liner *e* on which the conical breaking head *f* rests. Shaft *g* is pressed into the breaking head and is supported by it. The tapered lower end of the shaft is bushed onto the long large-surfaced eccentric *d* which is driven through gear *h* and pinion *i* from countershaft *j*. This is, in turn, belt driven or flexibly coupled to a motor. The weight of the gears and eccentric only is carried through an eccentric-thrust bearing *k*, consisting of alternate disks of bronze and hardened steel, by the cap *l* bolted to the bottom of the hub. Bowl *m* is a cylindrical casting threaded, with coarse power threads, into adjustment ring *n* which rests on the main frame and is held down by bolts *o* passing through springs *p* nested, at proper tension, between a segmented spring ring *q* and a rim *r* around the top of the main-frame shell. This arrangement causes crushing stresses on the bowl to be transmitted to the frame through ring *n*, bolts *o*, segments *q* and springs *p*, which latter are adjusted to such a tension that, while normal crushing loads produce no appreciable compression, excessive loads cause compression and permit the adjustment ring *n*, and with it the bowl, to rise with the lift of the breaking head and thus relieve the strain.

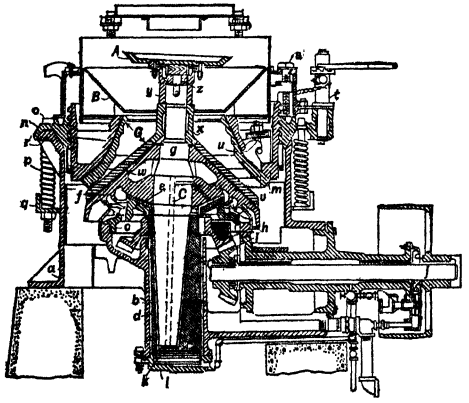

FIG. 39. Symons cone crusher (standard form).

Table 20. Estimating data for standard cone crushers *a*

Size	Gape, in.	Max. diam. of head, in.	Capacities in tons per hr. (T), reduction tons per hr. (T_R) and efficiencies in reduction tons per hp-hr. (E_C), when closed set in inches is as below *a*																											
			1/4			3/8			1/2			5/8			3/4			1			1 1/4			1 1/2			2			2 1/2		
			T	T_R	E_C	T	T_R	E_C	T	T_R	E_C	T	T_R	E_C	T	T_R	E_C	T	T_R	E_C	T	T_R	E_C	T	T_R	E_C	T	T_R	E_C	T	T_R	E_C
20-in.	1 1/2	20	10	34	2.8	15	34	2.8	20	34	2.8	25	34	2.8	....	....	....	....	....	....	....	....	....	....	....	....	....	....	....	....	....	....
	3	.....	....	.....	....	....	.....	....	20	72	4.8	25	70	4.7	30	72	4.8	....	.....	....	....	.....	....	....	.....	....	....	.....	....	....	.....	....
2-ft.	1 5/8	24	14	50	3.3	20	50	3.3	25	48	3.2	....	.....	....	....	.....	....	....	.....	....	....	.....	....	....	.....	....	....	.....	....	....	.....	....
	3	.....	....	.....	....	....	.....	....	25	90	5.0	30	84	4.7	35	84	4.7	45	86	4.8	50	70	3.9	60	72	4.0	....	.....	....	....	.....	....
3-ft.	3	36	25	180	6.0	35	165	5.5	40	144	4.8	....	.....	....	....	.....	....	....	.....	....	....	.....	....	....	.....	....	....	.....	....	....	.....	....
	4 1/2	.....	....	.....	....	....	.....	....	40	212	5.9	55	231	6.4	70	245	6.8	80	208	5.8	85	179	5.0	90	162	4.5	95	124	3.4	....	.....	....
4-ft.	4 1/2	48	....	.....	....	60	420	9.4	80	424	9.4	100	420	9.4	....	.....	....	....	.....	....	....	.....	....	....	.....	....	....	.....	....	....	.....	....
	6 3/4	.....	....	.....	....	....	.....	....	80	632	10.5	100	630	10.5	120	611	10.2	150	570	9.5	170	527	8.8	177	460	7.7	185	370	6.2	....	.....	....
4 1/4-ft.	6 3/4	51	....	.....	....	....	.....	....	100	790	10.5	120	755	10.1	140	715	9.5	160	608	8.1	175	543	7.2	182	477	6.4	....	.....	....	....	.....	....
	9 1/2	.....	....	.....	....	....	.....	....	....	.....	....	....	.....	....	140	1,035	11.5	160	897	10.0	175	788	8.8	182	677	7.5	190	532	5.9	....	.....	....
5 1/2-ft.	7	69	....	.....	....	100	1,080	12.0	130	1,066	11.8	160	1,040	11.5	....	.....	....	....	.....	....	....	.....	....	....	.....	....	....	.....	....	....	.....	....
	8 1/2	.....	....	.....	....	....	.....	....	....	.....	....	160	1,262	12.0	200	1,240	11.8	275	1,375	13.1	300	1,200	11.4	340	1,120	10.6	375	947	9.0	450	900	8.6
	9 3/4	.....	....	.....	....	....	.....	....	....	.....	....	160	1,455	12.1	200	1,520	12.7	275	1,565	13.0	300	1,380	11.5	340	1,290	10.7	375	1,087	9.1	450	1,035	8.6
7-ft.	9	85.5	....	.....	....	....	.....	....	225	2,385	15.9	280	2,355	15.7	....	.....	....	....	.....	....	....	.....	....	....	.....	....	....	.....	....	....	.....	....
	11	.....	....	.....	....	....	.....	....	....	.....	....	....	.....	....	330	2,840	17.2	450	2,880	17.4	560	2,910	17.6	600	2,580	15.6	800	2,560	15.5	900	2,340	14.2
	14	.....	....	.....	....	....	.....	....	....	.....	....	....	.....	....	330	3,630	20.2	450	3,690	20.5	560	3,690	20.5	600	3,300	18.3	800	3,280	18.2	900	2,970	16.5

Table 20. Estimating data for standard cone crushers *a*—*Continued*

Size	Motor recommended, hp.	R.p.m.	Weight, lb.	Performances *b*						
				No. of mills	T_R			E_C		
					Low	High	Av.	Low	High	Av.
20-in.	20 to 25	700	7,000	.....	.....	.....	.....	.....	.....	.....
				.....	.....	.....	.....	.....	.....	.....
2-ft.	25 to 30	575	10,500	.....	.....	.....	.....	.....	.....	.....
				2	53	55	54	1.8	3.5	2.6
3-ft.	50 to 60	580	21,000	1	.....	.....	250	.....	.....	5.6
				.....	.....	.....	.....	.....	.....	.....
4-ft.	75 to 100	485	35,000	2	216	531	374	2.4	11.8	7.1
				4	285	1,120	588	6.5	18.7	10.4
4 1/4-ft.	125 to 150	485	45,000	.....	.....	.....	.....	.....	.....	.....
				.....	.....	.....	.....	.....	.....	.....
5 1/2-ft.	150 to 200	485	85,000	2	580	682	631	4.0	5.5	4.8
				1	.....	.....	1,436	.....	.....	12.2
				2	790	840	815	6.6	13.2	6.6
7-ft.	250 to 300	435	130,000	2	1,155	1,440	1,298	9.6	11.4	10.5
				1	.....	.....	4,220	.....	.....	42.2
				5	5,650	8,740	7,168	34.2	89.3	71.6

a Feed is taken to have maximum thickness $t_{LF} = 60\%$ of crusher gape G, which tends to insure nonclog feeding. With average nonslabby ore, the limiting-screen aperture, w_{LF}, for such material = $1.7t_{LF}$, and for primary-crusher product w_{80F} may be taken as 80% of w_{LF} or $w_{80F} = 0.8 \times 1.7 \times 0.6G = 0.82G$.

Limiting aperture of product, $w_{LP} = 2.2 \times$ closed setting s_c (see Fig. 42), and $w_{80F} = 0.62w_{LP} = 0.62 \times 2.2s_c = 1.4s_c$.

Power consumption (HP_c) is taken as 60% of recommended motor horsepower, on the basis of the averages of Table 22, the lower value for the range being taken for fine bowl and the upper for coarse bowl; for medium bowls the mean of the range was taken. $T_R = Tw_{80F}/w_{80P}$; $E_c = T_R/HP_c$.

b From Table 22.

The bowl may be turned, if desired, during operation of the crusher, after loosening capscrew *s*, by suitable manipulation of windlass *t*, thus adjusting the setting. Bowl liners *v* of chilled iron or manganese steel are made in one piece and suspended from the bowl frame against zinc backing by bolts *u*. Mantle *w* of the same materials, similarly backed, is held down on the head by sleeve *x* and nut *y*, which is locked by plug *z*. A feed plate *A* carried on top of the spindle and a feed hopper *B* supported on the bowl distribute feed to the crushing zone. A suitable dust-sealing system is provided on the under side of the head. Oil is circulated by pump from a cooling sump upward through the eccentric bearing and through channels *C* to the socket bearing and thence by gravity over the gears and through the countershaft bearing back to the reservoir.

Sizes of standard cones are designated as the approximate diameter of the discharge annulus. Maximum size of material receivable is determined by the convexity of the bowl, the gape *G* (Fig. 39) ranging as shown in Table 20 according to whether the bowl is fine, medium, or coarse.



FIG. 40. Coarse bowl for short-head cone crusher.

Short-head cone has essentially the same frame and mechanism as the standard cone, differing in shape of crushing zone (Fig. 40) and having a somewhat smaller throw.

Sizes of short-head cones are designated on the same basis as those of standard cones (see above); coarse and fine bowls are available, as in Table 21.

Table 21. Estimating data for short-head cone crushers *a*

Size	Gape, in.	Capacities in tons per hr. (T), reduction tons per hr. (T_R), and efficiencies in reduction tons per hp-hr. (E_C), when closed set in inches is as below, *a*															Motor recommended, hp.	R.p.m.	Weight, lb.	Performances *b*							
		1/8			3/16			1/4			3/8			1/2						No. mills	T_R			E_C		
		T	T_R	E_C	T	T_R	E_C	T	T_R	E_C	T	T_R	E_C	T	T_R	E_C					Low	High	Aver.	Low	High	Aver.
3-ft.	2 1/8	15	90	1.6	20	80	1.4	30	90	1.6	40	80	1.4	50	75	1.3	75	580	22,500	1	....	....	138	.....	.....	2.3
	2 7/8	15	120	2.1	20	108	1.9	30	120	2.1	40	108	1.9	50	100	1.8										
4-ft.	2 1/2	20	140	1.2	35	165	1.5	50	175	1.6	75	172	1.5	100	175	1.6	150	485	45,000	4	126	390	202	1.2	3.5	2.0
	3 1/4	20	182	1.6	35	214	1.9	50	230	2.0	75	225	2.0	100	230	2.0				.....	.....	.....	.....	.....	...	.....
5 1/2-ft.	3	....	.....	.....	65	364	2.4	100	420	2.8	135	378	2.5	175	367	2.4	200	485	88,000	1	.....	....	220	.....	.....	1.5
	4 3/8	....	.....	.....	65	533	3.6	100	610	4.1	135	554	3.7	175	542	3.6				1	.....	.....	790	.....	.....	7.5
7-ft.	3 1/2	....	.....	.....	120	792	3.5	150	735	3.3	240	792	3.5	300	750	3.3	300	435	143,000	1	....	.....	600	.....	.....	2.7
	5 1/4	....	.....	.....	120	1,175	5.2	150	1,110	4.9	240	1,175	5.2	300	1,110	4.9				.....	.....	.....	.....	.....	.....	.....

a Feed is taken to have maximum thickness $t_{LF} = 60\%$ of crusher gape G, which tends to insure nonclog feeding. With average nonslabby ore, the limiting-screen aperture (w_{LF}) for such material = $1.7t_{LF}$. When the feed is standard-cone product, w_{80F} may be taken as $0.62w_{LF} = 0.63G$.
Limiting aperture of product w_{LP} is taken as 2.9 times closed setting, on the basis of Table 22, and $w_{80P} = 0.62w_{LP} = 0.62 \times 2.9s_c = 1.8s_c$.
Power consumption HP_c is taken as 75% of recommended motor horsepower on the basis of averages from Table 22.

$$T_R = Tw_{80F}/w_{80P}; \quad E_c = T_R/HP_c$$

b From Table 22.

Table 22. Performances of cone crushers

Plant	Black Hawk Consol.	Maitland	Pioneer	Black Hawk Consol.	Aldermac	Kelowna Expl.
Machine data						
Size, ft. *al*	2	2	3	3 SH	4	4
Gape, in. *am*	3 C *e*	3 C *e*	4 1/2 F	2 1/8 F	4 1/2 F	6 3/4 C
Set, in.	1	3/8	1/2	3/8	7/8	7/8
Throw, in.	.....	.....	.....	.....	2	.....
Method of driving *an*	B	B	.....	B	D	B
Method of starting control *ao*	CS	.....	.....	CS	CS	CS
Power installed, hp.	35	25	75	75	75	100
Speed: Driving pulley, r.p.m.	600	575	.....	890	480	485
Spindle, r.p.m.	.....	356	.....	.....	.....	.....
Operating data						
Size of feed, in. *a*	2 1/2 max.	2 max.	5 max.	1 1/2 max.	4 max.	.....
Size of product, in. *a*	1 1/2 max.	1/2 max.	*l*	3/8 *aa*	*g*	*3*
Capacity, tons per hr.: New feed	25	10	25	25	90	60
Total feed	.....	.....	.....	50	150	.....
Attendance, men per machine	0.5	.....	0.5	0.5	0.5	.....
Expected daily running time, hr.	14	16	16	14	11 1/2	5
Lost time: Average, %	2	*f*	.....	2	.....	.....
Causes	*aq, ar*	*f*	.....	*aq, ar*	.....	.....
Power consumed, hp. *b*	30	15	45 *b*	60	45	50
Lubricant, lb. per shift	1 1/2	*g*	.....	1 3/4	135 *l*	2 qt.
Changing liners, hr. aver.	8	6	.....	12	*j*	6
Surge-bin feed	No	Yes	.....	Yes	Yes	No
Protection from tramp iron	*at*	None	.....	*at*	Magnet	Magnet
Life of Mn wearing parts, days: Mantle	146	90	*au*	80	80	210
Concaves	110	90	*ay*	49	90	110
Derived data						
80%-size: Feed *d*	2.0	1.6	6.8	1.2	5.4	.....
Product *ac*	0.9	0.3	0.68	0.22	0.91	0.94
Reduction ratios: R_A *c*	3.0	8.0	14.0	5.3	5.1	7.7
R_L *ah, ak*	1.7	4.0	5.7	4.0	4.5	.....
R_W *al, ak*	1.5	3.1	10.0	2.4	4.6	.....
R_{80} *aj*	2.2	5.3	10.0	5.5	5.9	.....
Reduction tons per hr. *ad*	55	53	250	138	531	.....
Reduction tons per hp-hr. *ad*	1.8	3.5	5.6	2.3	11.8	.....

Plant	Magma	American Zinc Co.	Mata-hambre	Mountain City	Outokum-pu	S. F. Mine of Mex.
Machine data						
Size, ft. *al*	4	4	4	4	4	4
Gape, in. *am*	6 3/4 C	6 3/4 C *e*	6 3/4 C	4 1/2 F *e*	4 1/2 F	6 3/4 C
Set, in.	5/8	.....	1~1 1/4	3/8	1/2	3/4
Throw, in.	3	.....	.....	.....	.....	.....
Method of driving *an*	V	D	V	D	D	V
Method of starting control *ao*	Ma	.....	.....	PB	Ma	Ma
Power installed, hp.	100	100	100	100	100	100
Speed: Driving pulley, r.p.m.	520	.....	1,165	.....	490	485
Spindle, r.p.m.	286	.....	.....	.....	250	.....
Operating data						
Size of feed, in. *a*	4 *ap*	*5*	*6*	2 1/2 max.	.....	*7*
Size of product, in. *a*	*4*	*5*	*6*	.....	.....	*7*
Capacity, tons per hr.: New feed	100	150	150	70 *k*	30	100
Total feed	.....	.....	.....	.....	.....	.....
Attendance, men per machine	0.5	.....	0.5	.....	0.3	0.5
Expected daily running time, hr.	6 1/2–7	.....	13	7	17	20
Lost time: Average, %	1 1/2	.....	1	1	2	30
Causes	*aq, as*	.....	*aq*	*as*	*aq*	*aq, l*
Power consumed, hp. *b*	60	60 *b*	40	60 *b*	85	60
Lubricant, lb. per shift	60 qt./mo.	4 qt.	Negl.	100 qt./mo.	1.8	2 qt.
Changing liners, hr. aver.	16	4	5	16	24	2
Surge-bin feed	No	.....	No	No	No	No
Protection from tramp iron	Magnet	Magnet	Magnet	Magnet	No	Magnet
Life of Mn wearing parts, days: Mantle	*av*	.....	*aw*	1,829 hr.	100	60
Concaves	*av*	.....	*az*	2,052 hr.	90	60
Derived data						
80%-size: Feed *d*	5.4	3.6	1.8	.....	.....	2.8
Product *ac*	0.48	0.98	0.95	.....	.....	0.72
Reduction ratios: R_A *c*	10.1	.....	6.0	12.0	10.0	9.0
R_L *ah, ak*	6.8	2.8	2.0	.....	.....	2.7
R_W *al, ak*	6.4	.....	1.6	3.9	.....	3.5
R_{80} *aj*	11.2	3.7	1.9	.....	.....	3.9
Reduction tons per hr. *ad*	112.0	555	285	.....	.....	390
Reduction tons per hp-hr. *ad*	18.7	9.3	7.1	.....	.....	6.5

Footnotes will be found on page 52.

Table 22. Performances of cone crushers—*Continued*

Plant	Teck-Hughes	Wiluna	Shenandoah Dives		Aldermac	Omega
Machine data						
Size, ft. *al*	4	4	4	4 SH	4 SH	4 SH
Gape, in. *am*	6 3/4 C *e*	4 1/2 F	4 1/2 F	2 1/2	2 1/2 F	2 1/2 F *e*
Set, in.	5/8	3/8	3/4	1/4	1/4	1/4–3/8
Throw, in.					2	2 1/2
Method of driving *an*		B	V	D	D	B
Method of starting control *ao*			PB	PB	CS	PB
Power installed, hp.	75 *e*	100	100	150	100	150
Speed: Driving pulley, r.p.m.		750		514		485
Spindle, r.p.m.		275				255
Operating data						
Size of feed, in. *a*		*8*			1 1/2 max.	*10*
Size of product, in. *a*		*8*			*9*	*10*
Capacity, tons per hr.: New feed	90 *h*	60	45	30	90	38 to 40
Total feed					200	
Attendance, men per machine		0.3	0.5	0.5	0.5	1
Expected daily running time, hr.		18	16	24	11 1/2	16
Lost time: Average, %		Negl.		0.3		19
Causes				*aq*		*n*
Power consumed, hp. *b*	60 *ae*	90	60 *ae*		85	100 to 125
Lubricant, lb. per shift	*m*	0.4	0.4 qt.	0.4 qt.		
Changing liners, hr. aver.		3	8	8		5.5
Surge-bin feed			No	Yes	Yes	Yes
Protection from tramp iron		Magnet		Magnet	Magnet	Magnet
Life of Mn wearing parts, days: Mantle	*ax*	80	150	115		60
Concaves	*ax*	100	150	115		43
Derived data						
80%-size: Feed *d*		4.0			0.9	2.5
Product *ac*		1.1			0.63	0.25
Reduction ratios: R_A *c*	10.1	12.0	6.0		10.0	10.0
R_L *ah, ak*		3.7			1.5	2.0
R_W *ai, ak*		8.6			3.5	5.7
R_{80} *aj*		3.6			1.4	10.0
Reduction tons per hr. *ad*		216			126	390
Reduction tons per hp-hr. *ad*		2.4			1.5	3.5

Plant	S. F. Mines of Mex.	Silver King Coalition	Sunshine	Wiluna	Britannia M. & S.	Chuquicamata
Machine data						
Size, ft. *al*	4 SH	4 SH	4 SH	4 SH	5 1/2	5 1/2
Gape, in. *am*	2 1/2 F	2 1/2 F *e*	2 1/2 F	2 1/2 F	8 M	7 F
Set, in.	1/2	3/8	3/8	3/6	5/8	3/8
Throw, in.						
Method of driving *an*	V	V	V	B	B	D
Method of starting control *ao*	Ma		Ma			PB
Power installed, hp.	160	125	150	100	200	175
Speed: Driving pulley, r.p.m.	485	485	500	750		
Spindle, r.p.m.			250	262		
Operating data						
Size of feed, in. *a*	*11*	2 max.	*12*	*13*	6 max.	1.5–2
Size of product, in. *a*	*11*		*12*	*13*	*14*	*p*
Capacity, tons per hr.: New feed	100 *h*	23	75		175 *h*	135
Total feed		60		80		
Attendance, men per machine	0.5			0.3	0.3	0.5
Expected daily running time, hr.	20		10	18	22	16
Lost time: Average, %	30			Negl.	0.5–1	10
Causes	*aq, l*				*aq, as*	*aq*
Power consumed, hp. *b*	115	*o*	82	90	115 to 120	105 *ae*
Lubricant, lb. per shift	2 qt.		800 qt./yr.	0.15 qt.		4–8 qt.
Changing liners, hr. aver.	2			3	4	
Surge-bin feed	No	No	No	Yes	No	No
Protection from tramp iron	Magnet		Magnet		Magnet	Magnet
Life of Mn wearing parts, days: Mantle	120	180	*bb*	55	90 to 105	2,000 hr.
Concaves	120	180	*bb*	55		2,000 hr.
Derived data						
80%-size: Feed *d*	0.91		1.0	1.06	8.2	1.05–1.4 *bg*
Product *ac*	0.63		0.49	0.38	1.0	0.38
Reduction ratios: R_A *c*	5.0	6.7	6.7	8.0	12.8	15.3
R_L *ah, ak*	1.3		2.0	3.0	5.0	4.5
R_W *ai, ak*	1.8		3.1	6.3	9.6	5.1
R_{80} *aj*	1.4		2.0	2.8	8.2	4.3
Reduction tons per hr. *ad*	140		150		1,436 *bh*	580
Reduction tons per hp-hr. *ad*	1.2		1.8		12.2	5.5

Table 22. Performances of cone crushers—*Continued*

Plant	Dome	El Potosi	Falconbridge	Loreto	Matahambre	Mt. Lyell
Machine data						
Size, ft. *al*	5 1/2	5 1/2 SH	5 1/2 SH	5 1/2	5 1/2 SH	5 1/2
Gape, in. *am*	6 F	4 1/2 C	.....	7 F *e*	3 F	9 3/4 C
Set, in.	1/4	3/8	5/16	7/8	1/4	3/4
Throw, in.	3	2 1/2	.....	1 1/4	1 1/2	3
Method of driving *an*	D	D	V	.....	V	D
Method of starting control *ao*	Ma	PB	CS	.....	.....	PB
Power installed, hp.	150	125	200	225	250	200
Speed: Driving pulley, r.p.m.	480	.....	.....	.....	700	.....
Spindle, r.p.m.	220	.....	.....	.....	.....	.....
Operating data						
Size of feed, in. *a*	.....	4 max.	*15*	4 *ap*	*18*	4 max.
Size of product, in. *a*	.....	1/2 max.	*15*	*16*	*18*	*19*
Capacity, tons per hr.: New feed	100	85	.....	110 *h*	100	200
Total feed	.....	.....	.....	.....	250	.....
Attendance, men per machine	1	.....	1	.....	0.5	0.3
Expected daily running time, hr.	16	21	7 1/2	22	13	24 *q*
Lost time: Average, %	.....	.....	Negl.	.....	1	2.1
Causes	.....	*ar, as*	.....	.....	*aq*	*ba*
Power consumed, hp. *b*	110	105 *ae*	160	172	150	148
Lubricant, lb. per shift	26.8 qt./mo.	66.8 gal/mo.	Negl.	.....	Negl.	5
Changing liners, hr. aver.	12	14	12	.....	6	10
Surge-bin feed	No	No	Yes	.....	No	No
Protection from tramp iron	Magnet	None	Magnet	.....	Magnet	Magnet
Life of Mn wearing parts, days: Mantle	240	*bc*	219	85	*bd*	126
Concaves	240	*bf*	169	.....	*bd*	116
Derived data						
80%-size: Feed *d*	.....	2.8 *bg*	1.8	5.4	0.99	5.4
Product *ac*	.....	0.3	0.43	0.87	0.45	1.3
Reduction ratios: R_A *c*	24.0	12.0	.....	11.1	12.0	13.0
R_L *ah, ak*	.....	6.0	7.3	4.5	2.7	2.0
R_W *ai, ak*	.....	10.7	7.9	4.6	4.7	5.3
R_{80} *aj*	.....	9.3	4.2	6.2	2.2	4.2
Reduction tons per hr. *ad*	.....	790	.....	682	220	840
Reduction tons per hp-hr. *ad*	.....	7.5	.....	4.0	1.5	5.7

Plant	Pamour	Porcupine	New Cornelia	Utah Copper, Arthur	Chino	Chuquicamata
Machine data						
Size, ft. *al*	5 1/2	5 1/2 SH	7	7	7	7
Gape, in. *am*	7 F *e*	4 1/2 C	11 M	14 C	12 M	11 M
Set, in.	1 1/4	1/4	5/8	3/4	3/4	1 1/2
Throw, in.	.....	.....	3 1/2	3 13/16	4	.....
Method of driving *an*	V	D	D	D	D	D
Method of starting control *ao*	.....	.....	PB	PB	PB	PB
Power installed, hp.	150	200	250	250	*u*	300
Speed: Driving pulley, r.p.m.	.....	.....	435	450	*v*	.....
Spindle, r.p.m.	.....	.....	217	237	*v*	.....
Operating data						
Size of feed, in. *a*	.....	.....	7 max.	8 max.	8 max.	8–10
Size of product, in. *a*	.....	*20*	.....	*21*	*22*	.....
Capacity, tons per hr.: New feed	100 *s*	100	300	450	340	600
Total feed	.....	185 to 200	.....	.....	.....	.....
Attendance, men per machine	1	1	0.5	0.5	0.3	1
Expected daily running time, hr.	16	16	16	22	16	16
Lost time: Average, %	.....	.....	.....	Negl.	.....	10
Causes	.....	.....	*aq*	*aq*	.....	*aq*
Power consumed, hp. *b*	.....	170	145	100	100	.....
Lubricant, lb. per shift	.....	Negl.	24	4	9.6	8–16
Changing liners, hr. aver.	6	6 to 8	6	8	3	.....
Surge-bin feed	Yes	Yes	Yes	Yes	Yes	Yes
Protection from tramp iron	Magnet	Magnet	Magnet	*at*	None	None
Life of Mn wearing parts, days: Mantle	250	*be*	120	*t*	120	2,800 hr.
Concaves	186	*be*	120	234	225	2,800 hr.
Derived data						
80%-size: Feed *d*	.....	.....	.....	10.8	10.8	.....
Product *ac*	.....	.....	.....	0.71	0.87	.....
Reduction ratios: R_A *c*	.....	12.0	17.6	18.6	16.0	7.3
R_L *ah, ak*	.....	.....	.....	13.6	6.8	.....
R_W *ai, ak*	.....	.....	11.2	10.7	10.7	6.0
R_{80} *aj*	.....	.....	.....	15.2 *bh*	12.4 *bh*	.....
Reduction tons per hr. *ad*	.....	.....	.....	6,840 *bh*	4,220 *bh*	.....
Reduction tons per hp-hr. *ad*	.....	.....	.....	68.4 *bh*	42.2 *bh*	.....

Table 22. Performances of cone crushers—*Continued*

Plant	Homestake	Cons. M. & S. Co.	Utah Copper, Magna	Nev. Cons., McGill	McIntyre Porcupine	Miami
Machine data						
Size, ft. ***al***	7	7	7	7	7	7
Gape, in. ***am***	11 M	9 F	14 C	14 C ***e***	9 F	12 C
Set, in.	1 1/4	11/16	3/4	3/4~7/8	7/16	5/8
Throw, in.	3 5/8	4 3/4	3 13/16	5	5	3
Method of driving ***an***	D	V	D	D	V	
Method of starting control ***ao***	Magnetic	Ma		Ma	PB	
Power installed, hp.	300	200	250	250	200	250
Speed: Driving pulley, r.p.m.	450	450	450		441	
Spindle, r.p.m.	231	225	237		232	251
Operating data						
Size of feed, in. ***a***	9 max.	*23*	8 max.	12 max.	*25*	10 max.
Size of product, in. ***a***		*23*	1 max.	*24*	*25*	1 max.
Capacity, tons per hr.: New feed	560	400	450	400	150 ***s***	385
Total feed						
Attendance, men per machine	0		0.25	0.5	1	
Expected daily running time, hr.	8	21	22	20	16	22
Lost time: Average, %	Negl.	0.5	Negl.			
Causes		***aq***	***aq***			
Power consumed, hp. ***b***		150	100	73	80–135	***y***
Lubricant, lb. per shift	4	2–4 qt. ***r***	***x***	16 qt.	3 qt. ***r***	6 qt./day
Changing liners, hr. aver.	8	6	8	8	11	
Surge-bin feed	No	No	No	No	Yes	Yes
Protection from tramp iron	Magnet	None	***at***	None	Magnet	***at***
Life of Mn wearing parts, days: Mantle	385 ***ab***	225	145	5,664 hr.	300	
Concaves	450 ***ab***	325	231	7,152 hr.	300	
Derived data						
80%-size: Feed ***d***		2.6	10.8	16.3	4.7	13.6
Product ***ac***		0.73	0.60	1.0	0.61	0.6
Reduction ratios: R_A ***c***	8.8	13.0	18.6	17.2	20.5	19.2
R_L ***ah, ak***		3.7	8.0	6.2	5.3	10.0
R_W ***al, ak***	7.2	4.7	10.7	14.8	10.8	16.0
R_{80} ***aj***		3.6	18.0 ***bh***	16.3 ***bh***	7.7	22.7
Reduction tons per hr. ***ad***		1,440	8,100 ***bh***	6,510 ***bh***	1,155	8,740 ***bh***
Reduction tons per hp-hr. ***ad***		9.6	81.0 ***bh***	89.3 ***bh***	8.5 to 14.4	85.0 ***bh***

Plant	Noranda	Sherritt-Gordon	New Cornelia	Noranda	Climax Molybdenum	
Machine data						
Size, ft. ***al***	7	7	7 SH	7 SH	7	7 SH
Gape, in. ***am***	10 M	11 M ***e***	3 1/2 F	3 1/2 F	14 C	3 1/2 F
Set, in.	1 1/4	5/8	5/16	1/4	1 1/2	1/4
Throw, in.	3 1/2		3 1/2	3 1/2		
Method of driving ***an***	D	D	V	D	D	D
Method of starting control ***ao***	CS	CS	PB	CS	PB	PB
Power installed, hp.	250	250	250	300	300	300
Speed: Driving pulley, r.p.m.	500	430	435	500	450	450
Spindle, r.p.m.	243		217	243	236	219
Operating data						
Size of feed, in. ***a***			*26*		10 max.	2 max.
Size of product, in. ***a***					2 max.	1/2 max.
Capacity, tons per hr.: New feed	431	225	150	431	500	150
Total feed			400			350
Attendance, men per machine	0.5		0.3	1	0.5	0.25
Expected daily running time, hr.	18	13	16	18	14	16
Lost time: Average, %	14			14	40	30
Causes	*z*		***aq***	*z*	*z*	*z*
Power consumed, hp. ***b***	150 ***ae***	208	240	200	165 ***ae***	225
Lubricant, lb. per shift	1.4 qt. ***r***	4 qt. ***r***	12 qt.	1.4 qt. ***r***	4 qt.	4 qt.
Changing liners, hr. aver.	3	20	6	3	4 to 6	4 to 6
Surge-bin feed	Yes		Yes	Yes	No	No
Protection from tramp iron	None	None	Magnet	None	Magnet	Magnet
Life of Mn wearing parts, days: Mantle	70 to 80	342	120	80 to 100	60	90
Concaves	50 to 75		120	75 to 90	60	60
Derived data						
80%-size: Feed ***d***					13.6	1.2
Product ***ac***					1.2	0.3
Reduction ratios: R_A ***c***	8.0	17.6	11.3	12.0	9.3	14.0
R_L ***ah, ak***					5.0	4.0
R_W ***al, ak***			6.4		6.7	8.0
R_{80} ***aj***					11.3	4.0
Reduction tons per hr. ***ad***					5,650	600
Reduction tons per hp-hr. ***ad***					34.2	2.7

Notes for Table 22.

a Numbers in italic refer to columns in Table 22*a*.

b Where power consumed is not available it is assumed as 60% of installed.

c Gape + set.

d See Eqs. 6, 7, 7*a*.

e From manufacturers' catalogue.

f Small repairs frequent but made in idle time.

g Unsatisfactory oil seal causes high oil consumption and wear as abrasive dust enters.

h Based on capacity of whole plant.

i Imperial gallons per year.

j 60 man-hr., 5 men, remove old liner, rezinc new, and assemble machine; 32 man-hr., 4 men, remove mantle, rezinc new, and assemble machine.

k Feed to preceding screen.

l No ore.

m 1 Imperial bbl. per yr.

n Cleaning screen and taking up crusher.

o 1.1 hp-hr. per ton feed.

p 20% > 0.371-in.

q 6-day week.

r Imperial.

s Not up to capacity.

t Lower 170, upper 500 days.

u 2 @ 200, 1 @ 250.

v 430, 450, 435 r.p.m. pulley; 223, 234, 226, r.p.m. spindle.

x June 1937 used 1.52 gal. per machine shift.

y 0.20 kw-hr. per ton, cone and feeder.

z Causes not connected with crusher.

aa Maximum size screen undersize.

ab Average tons per mantle 750,080; per set of concaves 462,847.

ac When screen tests were not available, 80%-size of product was estimated at 60% of limiting screen (see Figs. 42, 43).

ad Based on new-feed tonnage when available; otherwise on total feed.

ae Estimated.

ah See Eq. 1.

ai See Eq. 3.

aj See Eq. 5.

ak Where screen test was unavailable the assumption was that "maximum" size as reported indicated limiting square-mesh screen for sizes 3-in. max. and smaller, and grizzly aperture for larger sizes.

al SH = short-head; otherwise standard.

am C = coarse bowl, F = fine bowl, M = medium bowl.

an B = flat belt, D = direct-connected, *V* = V-belt.

ao CS = compensating switch, Ma = manual, PB = push-button.

ap Set of preceding crusher.

aq Replacing wearing parts.

ar Power failures.

as Wet ore.

at Hand picked.

au 90,000 tons.

av 140,000 tons.

aw 150,000 tons.

ax 53,000 tons.

ay 95,000 tons.

az 130,000 tons.

ba Adjusting.

bb 250,000 tons.

bc 800,000 tons.

bd 210,000 tons.

be 100,000 tons.

bf 1,200,000 tons.

bg Estimated at 70% of limiting screen.

bh Probably too high.

Gyrasphere crusher (Fig. 41) is of the cone-crusher type, but the crushing head *a* is a spherical segment, and its motion is effected through a combination of the actions of the gear-driven eccentric *b* and spindle *c*, and the cam ring *d*, on which the rollers *e* act as followers. Cam ring *d* is fastened to and revolves with eccentric *b* and is so formed that a vertical plane through its lowest element also contains the thickest vertical section of the eccentric sleeve. Thus the crushing load is exerted in part through the action of a lever comprising the spindle as the power arm, the rollers on the low part of the cam as fulcrum, and that part of the head opposite thereto as the working arm, and in part through the wedge action of the cam acting through the rollers on the high side. Tremendous pressures are, therefore, concentrated on the rollers and their race rings, and are transmitted to the frame through the lower roller thrust bearing (*f*); these become, in consequence, the crucial points in the mechanism. The machine has the same general type of vertical screw adjustment of the position of the bowl and of spring backing for the bowl as is found in the cone crusher.

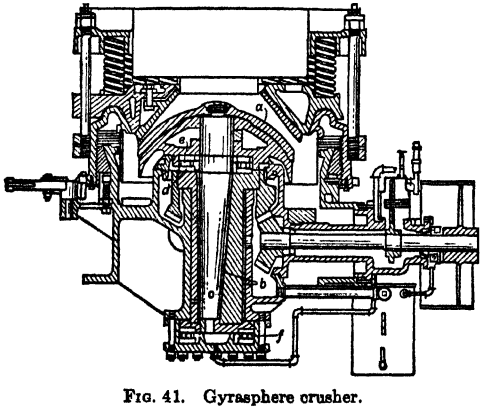

FIG. 41. Gyrasphere crusher.

Manufacturers of cone-type crushers: Nordberg Mfg. Co., Smith Eng. Wks.

Performance data are presented in Table 22.

Table 22*a*. Screen tests for Table 22 (percentages retained on designated screens)

Ref. No.	Plant	Material	4-in.	3	2	1 1/2	1	3/4	1/2	3/8	3-m.	4	6	8	10	14	20	28	35	48	65	100	150	200	<last
1	Pioneer	P	.....	.....	.....	.....	.....	12.2	27.8	.....	25.5	.....	14.0	.....	7.4	.....	4.5	2.0	.....	.....	.....	.....	.....	.....	6.6
2	Aldermac	P	.....	.....	.....	.....	9.7	27.7	27.4	.....	33.0	.....	0.6	.....	.....	.....	.....	.....	.....	0.2	.....	.....	.....	.....	1.4
3	Kelowna	P	.....	.....	.....	.....	14.6	.....	46.5	.....	.....	15.9	.....	.....	.....	.....	.....	.....	.....	.....	.....	.....	.....	.....	23.0
4	Magma	F *a* P	.....	.....	.....	.....	.....	3.4	20.6	.....	28.6	.....	.....	.....	18.4	.....	.....	.....	.....	.....	.....	.....	.....	.....	29.0
5	Mascot	F	9.1	26.4	19.5	11.6	7.1	.....	11.4	.....	.....	.....	.....	.....	.....	.....	.....	.....	.....	.....	.....	.....	.....	.....	14.9
		P	.....	.....	.....	.....	20.8	13.6	23.5	8.5	6.7	.....	8.5	.....	.....	.....	.....	.....	.....	.....	.....	.....	.....	.....	18.4
6	Matahambre	F	.....	.....	.....	.....	33.4	9.6	8.6	8.8	6.6	4.9	4.0	.....	6.5	.....	5.4	.....	1.8	1.2	1.2	1.0	1.1	0.5	5.4
		P	.....	.....	.....	.....	16.6	16.4	14.4	11.1	8.4	5.7	4.2	.....	5.8	.....	6.4	.....	1.7	1.2	1.4	1.3	0.9	0.4	4.1
7	San Francisco Mines of Mex.	F	.....	15.2	27.7	.....	30.3	11.2	4.9	3.1	1.9	1.0	0.7	0.3	0.5	0.4	0.3	0.2	0.2	0.2	0.2	0.3	0.2	0.1	1.1
		P	.....	.....	.....	.....	3.8	13.5	20.6	20.7	9.6	5.5	4.8	2.4	3.3	2.3	1.9	1.6	1.5	1.3	0.7	1.4	0.9	0.6	3.6
8	Wiluna	F	.....	34	.....	44	.....	.....	17	.....	3	.....	.....	.....	.....	.....	.....	.....	.....	.....	.....	.....	.....	.....	2
		P	.....	.....	.....	3	.....	.....	42	.....	50	.....	.....	.....	.....	.....	.....	.....	.....	.....	.....	.....	.....	.....	5
9	Aldermac	P	.....	.....	.....	.....	.....	6.8	26.8	.....	52.0	.....	.....	.....	8.0	.....	.....	.....	.....	2.4	.....	.....	.....	.....	4.0
10	Omega	F	.....	0	.....	.....	.....	84.4	2.1	3.6	6.6	2.0	.....	.....	.....	.....	.....	.....	.....	.....	.....	.....	.....	.....	1.3
		P	.....	.....	.....	.....	.....	.....	.....	1.2	15.1	24.8	14.0	10.4	5.9	5.1	4.4	3.4	2.5	2.2	2.0	1.7	1.5	1.3	4.5
11	San Francisco Mines of Mex.	F	.....	.....	.....	.....	8.5	31.1	38.7	19.3	0.6	0.3	0.1	.....	.....	0.1	.....	.....	.....	0.1	.....	0.2	.....	0.1	0.9
		P	.....	.....	.....	.....	0.8	5.0	30.6	22.7	23.0	5.9	3.0	1.1	1.6	0.9	0.7	0.6	0.6	0.3	0.2	0.7	0.4	0.3	1.6
12	Sunshine	F	.....	.....	.....	.....	20.7	.....	60.6	.....	16.4	.....	.....	.....	0.5	.....	.....	.....	.....	.....	.....	.....	.....	.....	1.8
		P	.....	.....	.....	.....	.....	.....	17.6	.....	52.0	.....	.....	.....	15.4	.....	.....	.....	.....	.....	.....	.....	.....	.....	15.0
13	Wiluna	F *b* P	.....	.....	.....	.....	.....	.....	0	.....	38.6	.....	.....	.....	.....	.....	.....	.....	.....	.....	.....	.....	.....	.....	61.4
14	Britannia Beach	P	.....	.....	.....	.....	20.9	.....	.....	.....	.....	65.1	.....	5.2	.....	.....	.....	.....	.....	.....	5.9	.....	.....	.....	2.9
15	Falconbridge	F	.....	13.0	6.1	3.0	7.6	20.3	.....	.....	.....	.....	.....	.....	.....	.....	.....	.....	.....	.....	.....	.....	.....	.....	50.0
		P	.....	.....	.....	.....	.....	.....	6.5	.....	45.4	.....	18.4	.....	9.5	.....	.....	.....	.....	.....	.....	.....	.....	.....	20.2
16	Loreto	P *c*	.....	.....	.....	.....	7.4	23.5	24.0	15.4	7.7	6.2	3.4	2.4	.....	2.9	.....	2.0	0.3	0.7	0.5	0.5	0.6	0.3	2.2
18	Matahambre	F	.....	.....	.....	.....	18.7	23.8	17.8	21.6	9.6	1.9	0.6	.....	0.5	.....	0.9	.....	1.3	0.5	0.2	0.3	0.5	0.3	1.5
		P	.....	.....	.....	.....	.....	0.6	5.5	36.5	19.5	11.4	7.2	.....	8.0	.....	5.4	.....	2.0	0.8	0.1	0.7	.....	1.3	1.0
19	Mt. Lyell	P *c*	.....	.....	.....	10.1	24.4	13.5	9.3	.....	12.0	.....	.....	11.6	2.5	2.5	.....	2.9	1.4	1.1	1.5	1.0	0.8	0.5	4.9
20	Pamour Porcupine	P *c*	.....	.....	.....	.....	.....	.....	.....	.....	.....	38.1	.....	21.6	.....	8.2	3.6	2.7	3.9	6.4	4.6	2.8	.....	4.5	3.6
21	Utah Copper, Arthur	P	.....	.....	.....	.....	0.9	14.7	29.6	14.6	10.4	6.3	3.8	2.9	1.9	1.6	1.3	1.2	1.3	1.1	1.0	1.5	0.8	0.7	4.4
22	Chino	P	.....	.....	.....	.....	12.5	14.6	12.9	10.6	8.1	6.5	3.7	2.8	2.7	2.9	2.7	2.3	2.4	1.8	1.9	1.8	1.8	1.7	6.3
23	Cons. M. & S. Co., Kimberley	F	.....	16.3	9.9	.....	32.2	10.0	5.9	.....	.....	10.5	1.9	.....	3.4	.....	.....	.....	.....	.....	.....	.....	.....	.....	6.7	3.2
		P	.....	.....	.....	.....	.....	18.3	17.9	.....	.....	30.8	5.8	.....	8.2	.....	.....	.....	.....	.....	.....	.....	.....	.....	13.1	5.9
24	Nevada Cons., McGill	P	.....	.....	.....	.....	.....	.....	.....	.....	63.5	5.1	4.6	3.8	3.0	2.7	1.9	.....	.....	.....	.....	.....	.....	.....	.....	15.4
25	McIntyre Porcupine	F	23.9	.....	17.5	5.7	3.4	7.1	6.4	5.1	4.4	3.4	3.4	1.8	2.0	2.2	1.5	1.7	1.4	1.4	1.0	1.2	0.7	0.4	4.4
		P	.....	.....	.....	.....	1.5	8.7	17.2	16.3	9.8	6.8	7.1	4.2	5.2	2.0	2.9	2.7	2.7	1.8	1.8	1.5	1.0	0.7	6.1
26	New Cornelia	F	.....	.....	.....	.....	13.0	16.1	14.3	27.5	22.6	4.0	.....	.....	.....	.....	.....	.....	.....	.....	.....	.....	.....	.....	2.5

a Blake-crusher product, 4-in. set. *b* Same as 8P. *c* Includes undersize of scalping screen.

Adjustment of the cone crusher is substantially limited to change in the discharge setting. The large eccentricity with the corresponding large throw (as much as 5 times that for the gyratory) is an essential part of the high capacity of the machine; it cannot be decreased without serious sacrifice of capacity, nor can it be materially increased without substantial redesign to take care of increased stresses. Speeds close to those recommended by the manufacturer and closely regulated are desirable, if maximum capacity and a uniform-sized product are to be attained. Change of setting is so readily effected, even with the machine under load, that it is advisable to make a predetermined drop of the bowl every 2 or 3 days to compensate for bowl and mantle wear. Care must be maintained, however, to reseat the adjustment capscrews firmly after all such changes, as a loose bowl will probably entail a costly repair job on the bowl-adjusting thread.

Feed to cone-type crushers should be of such maximum size as to enter the crushing zone readily and seat one or two diameters below the mouth; it should be free of material finer than the crusher set, else it will tend to reduce capacity by overloading and choking the fine zone; and it should be so fed as to distribute it on entry uniformly around the entire receiving opening. Barring bridging due to excessive coarseness, machines may be buried with feed and so run; one manufacturer recommends such practice.

Closed-circuit operation of short-head fine-bowl machines with vibrating screens is being used increasingly. It tends, however, to load up the circuit with material of a size near the crusher setting, which in turn has much of the choking effect of fines in the feed. Notwithstanding this tendency, operations are reported indicating economy in 2-stage cone crushing, with the circuit closed on the second cone with a 1/4-in. screen, as opposed to a 2-stage cone-rolls flow with the circuit similarly closed on the rolls.

Size of product. Substantially all of the product of a standard cone crusher working on nonslabby material will pass a square-mesh testing screen of aperture equal 1.5 to 3.0 times the set, average of 20 = 2.2 times. The percentage of product coarser than the set

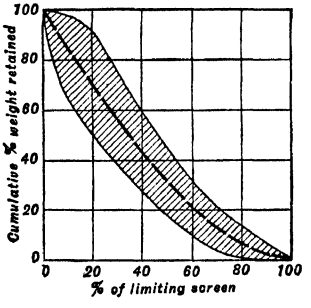

FIG. 42. Size of product of standard cone crusher.

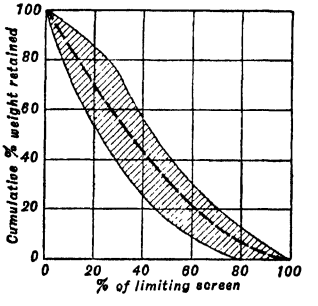

FIG. 43. Size of product of short-head cone crusher.

ranges from 14 to 70, being greater, in general, with the coarser settings; average of 17 reports was 32. Performance data indicate a clustering of values around 25 to 35% coarser than the setting, but the manufacturers in rating their machines tend to estimate 40 to 50% coarser for coarse bowls and 25 to 30% coarser for fine bowls. The percentage that will pass a screen of aperture equal to half the setting ranges from 13 to 55% (average of 17 was 38) with a clustering of values around 35 to 45%; again the manufacturers run to the conservative side, estimating 35 to 40% for fine bowls but dropping to 25 to 30% for coarse bowls.

For short-head cones the ratio of limiting-screen size of product to set averages 2.9, with a range of 2 to 4; percentage coarser than set averages 54, with a range from 36 to 86; and the percentage finer than half-set averages 16, with a range from 6 to 22. Figs. 42 and 43 are generalized from available screen tests.

Reduction ratio possible (ratio gape : set) in cone-type crushers is enormous as compared with other gradual-pressure type crushers. It results from the relatively great length of crushing face, and from the annular corrugation of crushing faces near the receiving opening, which has the effect of decreasing nip angle at a point where the apparent nip angle is too great for seizure. Despite the fact that the limiting size of product is about twice the closed setting, it is seen by reference to Table 20 that limiting-size reduction ratios of 6 or 7 to 1 are possible with most sizes of machine, although ratios of 3 to 5 are more common.

Capacity of the standard cone-type crusher in terms of reduction tons per hr. per ton weight of machine is nearly 3 times that of the standard Blake crusher, more than twice that of the standard gyratory, and nearly twice that of the reduction gyratory. Its performance record as to lost time for mechanical reasons demonstrates that it has the ruggedness to support the loading that it is rated for. The high capacity is to be attributed largely to the relatively great throw, while the small relative weight follows from the efficient overload relief afforded by the spring-backed bowl. Performance data, which are available in considerable number for the standard machines, indicate that except for the largest machines, users do not load to a point anywhere near maximum capacity. On the other hand, the reported performances of large cones with coarse bowls exceed the makers' ratings somewhat, and, since these ratings are reasonably consistent from size to size in the proportionality of capacity to discharge area and to throw, the indication is that they are conservative throughout.

The short-head capacity in reduction tons per hr. per ton weight of machine is only about 30% that of the standard machine. It is least, as might be expected, with fine bowls and tends also to fall somewhat with smallest settings.

Power consumption for 20 standard cones, according to questionnaire reports, ranges from 29 to 90% of installed, averaging 60%; for short-heads, the range is 55 to 96%, average of 11 is 75%.

Efficiency, according to the manufacturer, ranges, for the standard machine, from an average of 3.8 to 16.6 reduction tons per hp-hr., increasing regularly with size of machine. Performances are lower in the smaller machines, ranging from 1.8 to 18.7 reduction tons per hp-hr. for machines smaller than the 7-ft. size and averaging 6.9 for 14 mills reporting. The 7-ft. standard-machine performances range from 9.6 to 89.3 reduction tons per hp-hr., averaging 52.6 for 8 machines reported, against 16.6 average for the manufacturers' estimates. It is probable, however, that several of the figures estimated from performance reports are too high and that 25 reduction tons per hp-hr. is nearer a correct average. Short-head machines are much less efficient. The manufacturers' estimates range from 1.5 reduction tons per hp-hr. for the 3-ft. machine to 5.0 for the 7-ft. machine. Performances range from 1.5 to 7.5 reduction tons per hp-hr. Excluding the high and low figures, the average is 2.1.

Disk crusher is an obsolete machine which had considerable vogue from 1915 to 1925. Description and performance data may be found in *Ed. 1, 282–287.*

8. ROLLS

Rolls are of two general types—rigid rolls and spring rolls. RIGID ROLLS are the older type, rarely used at the present time because of their tendency to stall and to suffer mechanical damage. They differ from the type to be described in that the bearings for both rolls are rigidly fixed on the frame and the rolls must either stall or something must bend or break when an uncrushable particle or a rush of feed enters. They must be operated at low speeds to keep down bearing temperatures and machine breakage; consequently they have low capacities. Such rigid rolls as are now in use are ordinarily fitted with a breaking block or washer under the tension-bolt nut, which acts as a safety or break point.

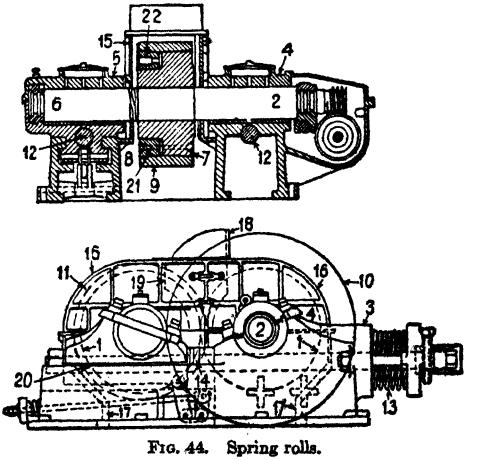

FIG. 44. Spring rolls.

Spring rolls are illustrated in Fig. 44. They consist essentially of two cylinders *1* mounted on horizontal shafts which are driven in opposite directions so that corresponding points on the cylinder faces above the horizontal plane through the shaft centers are moving toward each other. The main frame *3* carries the fixed bearings *4* and movable bearings *5*. These bearings carry shafts *2* and *6*. Near the centers of the shafts are the cores or hearts *7*, fixed, and *8*, removable, for holding the shells *9*. The fixed roll is driven by pulley *10* and the movable roll by a smaller pulley *11*. The movable roll is held up to

the fixed roll by means of two heavy tension rods *12*, carrying nuts that bear at one end against the movable-roll bearings and at the other end against a nest of springs *13*, which are seated against the main frame. The minimum distance between roll faces is fixed by the shims *14*. The rolls are encased in a housing consisting of fixed sides *15*, and covers *16* which are easily removed to permit inspection of the roll faces. Beneath the rolls a hopper *17* is provided to guide the discharge to a chute. A feed hopper *18* is bolted to the top of the housing. This hopper is fitted with replaceable distributing plates that spread the stream of feed out over the full width of the roll faces. Cheek plates *19* are provided to protect the housing from wear of the feed stream and to prevent material from passing between the sides of the rolls and the housing without crushing. Cheek plates, roll shells, and hopper liners are made replaceable. Replaceable steel strips *20* are provided to protect the frame from wear due to movement of the movable-roll bearing. Table 23 is generalized from catalogues of the principal makers and gives data as to sizes, weights, speed, and power consumption of rolls available without special design. There is a wide diversity in weight of a given size of roll as offered by different manufacturers. The lighter rolls should be chosen only for small capacities or very easy crushing or where first cost is of paramount importance; if they are used for heavy-duty free-crushing or for choke-crushing, lost time and maintenance costs are excessive. Heavy rolls for heavy service will repay the additional first cost in a short time in lower repair costs and continuity of operation.

Table 23. Crushing rolls; selected catalogue data [c]

Size, in.		Weight, thousands of lb.		Spring pressure, thousands of lb. per lineal in.	Speed, r.p.m.	Motor hp.
Diam.	Face	Lighter duty *a*	Heavier duty *b*			
9	10	2.4	.....	2.0	300 to 350	6
12 1/2	12	3.1	.....	2.0	150	7.5
18	10	4.7 to 5.6	.....	2.0 to 2.5	100 to 300	8
24	12	11.8	.....	3.0	180 to 230	10
24	14	8.5 to 12.0	.....	2.0 to 8.0	100 to 160	20 to 25
24	16	8.8	.....	2.0 to 8.0	140 to 160	20 to 25
24	20	9.1	.....	2.0 to 8.0	140 to 160	25 to 30
24	24	9.5	.....	2.0 to 8.0	140 to 160	25 to 30
30	14	14 to 20	.....	2.0 to 8.0	75 to 180	15 to 30
30	16	14.5 to 20	.....	2.0 to 8.0	130 to 180	15 to 30
30	18	15	.....	4.0 to 8.0	130 to 140	30 to 40
36	12	.....	41.6	13.4	100 to 150	30 to 35
36	14	30.9	42.4 to 58.2	4.0 to 11.6	100 to 150	35 to 40
36	16	18.8 to 31.9	43.2 to 59.3	4.0 to 10.0	50 to 150	25 to 40
36	18	19.2	.....	6.0 to 10.0	95 to 105	35 to 45
36	20	19.8	.....	6.0 to 10.0	95 to 105	35 to 45
37 1/2	12	.....	42.4	13.6	100 to 150	35 to 40
40	15	38	.....	8.0	80 to 100	35 to 40
40	36	57	.....	6.0	80 to 100	40 to 45
42	14	34.1	63.5	6.0 to 16.2	85 to 150	30 to 50
42	16	30 to 40	64.4 to 80.0	6.0 to 14.0	80 to 150	35 to 50
42	18	32	65.7	6.0 to 13.0	80 to 150	35 to 55
43 1/2	16	.....	65.3	16.2	100 to 150	40 to 55
48	16	.....	81	20	100 to 150	50 to 60
48	18	.....	79.9	15	75 to 105	60
48	20	.....	81.5	15	75 to 105	65
48	24	50	.....	6.0 to 10	70 to 80	45 to 60
54	16	.....	88.0 to 99.7	16 to 18	70 to 120	60 to 65
54	20	.....	90 to 103	16 to 18	70 to 120	60 to 70
54	24	65	95 to 140	15 to 17	65 to 120	50 to 75
54	30	.....	112	16	70 to 95	85
60	18	80 to 106	180	14 to 25	65 to 125	60 to 150
60	20	108	184	13 to 25	65 to 125	65 to 150
60	24	88 to 146	190	8 to 25	60 to 125	60 to 200
60	30	154	.....	20	65 to 85	100
72	24	112 to 186	225 to 230	8 to 30	50 to 100	75 to 250
72	30	192	237	15 to 30	50 to 100	125 to 250
78	20	242	305	30 to 40	50 to 100	200 to 300
78	24	.....	310	30 to 40	50 to 100	300 to 350
90	24	.....	340	30 to 40	50 to 85	350 to 400

a Suitable for the lower range of spring pressures and peripheral speeds below or around 1,000 f.p.m.

b Suitable for the heaviest service with high spring pressures and peripheral speeds of 2,000 f.p.m. or more.

c The selection gives the more usual sizes. Substantially double the number of widths are available at all diameters from 40- to 78-in. inclusive.

Frame is usually a one-piece casting with the lower half of the fixed bearing, the spring seat, and the discharge hopper cast integral; in large heavy-duty rolls, however, the frame is cast in longitudinal halves with heavy flanges and these are bolted together with fitted bolts. The sides of all but the smallest rolls are of box section, thus forming heavy box girders along both sides of the rolls under the bearings. The tops of the sides are machined at one end to form slides for the movable bearings and are fitted with removable steel wearing plates that protect them from the wear of the movable bearing. Cast iron, cast steel, or high-test iron is the usual material for frames. The bottoms of the frames of the better rolls are planed in order to give a smooth bearing on the foundation. In the better rolls heavy bosses are cast on the frame for the anchor-bolt holes; a sufficient number of these holes, of large enough diameter, should be provided to insure against serious vibration and shearing of bolts. The experience of a reliable manufacturer is the best guide available on this score. Recently some manufacturers have built frames of rolled-steel shapes and plates, riveted or welded. Such frames lack rigidity and are unsuitable for other than the lightest service.

Bearings are made extra long and heavy in order to distribute the heavy forces brought upon them. Normally they are split along planes at an angle of 20° to 30° to the horizontal as shown in Fig. 44. This is done in order to prevent shearing stresses on the bearing-cap bolts by bringing these bolts into lines substantially parallel to the direction of the resultant of the forces exerted in the bearings by the roll shafts. Movable bearings are mounted on a pedestal with a long base which is so fitted on a slide as to help assure keeping the movable roll in close alignment with the fixed roll. The slide is faced with a suitable wearing plate. Bearings are self-aligning, allowing the rolls to swivel in order to permit a hard object to go through on one side without bending the roll shafts. Babbitt or phosphor bronze is used for lining bearings, some users preferring one and some the other. In smaller rolls babbitted bearings are plain babbitted, in large rolls babbitted bushings are used in the lower half. With this provision the bearings can be rebabbitted by lifting the shafts but a small distance and slipping the bushings in under them. Some manufacturers provide a holding-down device for the movable bearing that prevents chattering and decreases wear on slides and bearings. Bearing caps are fitted with large reservoirs for grease or oiled waste, and generous oil passages should be cut in the babbitt to allow ready circulation to all parts of the bearing. Antifriction bearings have been used on light-duty rolls, but have not yet been tried for heavy duty. Some sort of dust cap should be provided over the bearing ends.

Tension rods are made of best forged steel or of alloy steel, of ample cross-section. One end is fitted with a heavy hexagonal nut with provision for pinning in position. The other end is threaded with a special thread for transmitting power and is fitted with a special nut or a gear wheel that works against the spring cage. Tension rods are placed as near the shafts as possible in order to bring them close to the line of the forces resisting crushing. One, two, or four are used each side according to the size of roll and type of duty. Single rods are placed below and multiple rods both above and below the roll shafts.

Springs are of the helical type and are carried in cast-steel cages; they are set to the proper tension at the factory. Working pressures range from 500 to 50,000 lb. per lineal in. of roll face, which correspond to spring pressures of about 1,500 to 30,000 lb. per spring. With the high pressures the rolls are practically rigid and, while there is enough give when an unbreakable article passes through to save bent shafts and broken frames in most cases, there is no doubt that there are more cracked frames with high spring pressures than with low. In free-crushing (see p. 73) the springs do not give until a pressure well in excess of ordinary resistance to crushing is exceeded. They take no part, therefore, in such crushing. With choke-feeding the rolls are spread against the spring pressure during the crushing and much of the crushing force is applied by the springs, which must, therefore, be kept under high pressure, if high effectiveness is desired. Two or four heavy bolts are provided for each cage. These bolts need not be disturbed when spacing the shells nor at any other time except in the event of replacing a broken cage or spring or when it is desired to change the spring pressure. Increase in spring pressure should be made with caution, as it is usually set by the maker as high as is safe.

Shafts are made of forged or alloy steel turned, polished, and keyed for pulleys. They should be heat-treated to relieve forging strain. In some makes of rolls the shafts are interchangeable and reversible; in other makes the ends are grooved for thrust collars and fitted for lateral adjusting devices in such a way as to prohibit the interchangeable feature. Normally, the diameter of the shaft is greater in the core than elsewhere, in order to put the most metal at the place of greatest strain. All dimensions should be generous, as the loads are tremendous and unpredictable.

Drive. Older practice was by pulleys and flat belts from a countershaft. The pulley on the fixed-roll shaft was large enough to transmit all of the power necessary for crushing; the smaller pulley on the movable roll, driven by a crossed belt, was designed to keep the roll moving when the machine was idling, so that there would be no lag to pick up when feed started again. Such rolls are rated RIGHT- or LEFT-HAND according to whether the large pulley is at the observer's right or left as he faces the end of the rolls carrying the spring cages. Most modern large rolls are fitted with Tex-rope sheaves, flywheel type, of the same diameter on both rolls, and are individually driven from separate motors. This arrangement is more compact and mechanically more efficient than the flat-belt drive. Light smooth-faced pulleys are made of wood, cast iron, cast semi-steel, or with steel disk and cast-iron or cast-steel rim. Cast pulleys are made with a split hub key-seated and with solid rim. In all cases the pulleys are balanced as perfectly as possible. Wood pulleys or steel-disk pulleys are recommended for vibrating duty such as is encountered in coarse crushing.

Usually pulleys are placed on opposite sides of the frame, but occasionally both pulleys are placed on the same side, the stationary shaft furnished with an outboard bearing. This arrangement is much superior from the standpoint of safety and convenience. Some slow-speed rolls (CORNISH ROLLS, p. 72; see also Sec. 2, Fig. 109) are gear-driven, as are also the toothed rolls used in coal breaking.

Roll centers, cores, or hearts are made of cast iron or semi-steel. A typical form for large rolls is shown in Fig. 44. The fixed heart 7 has a long tapered hub. It is pressed onto the shaft under hydrau-

lic pressure running up to 300 tons per sq. in. The movable heart *8* is split and drawn onto the hub of the fixed heart by bolts *21*. The outer surface of the hearts is tapered toward a least diameter along a circumference at the central transverse plane of the roll shell when in place. The roll shell is correspondingly tapered inside. Shells are put on by first removing the movable heart and slipping the shell over the fixed heart, then drawing the movable heart tightly in place by means of bolts *21*. Frequently the shell is expanded by heating at the time the cores are drawn together so that when cool it shrinks down on the cores. Gas and electrical-induction heaters are used. With the latter type it required (*54 CMJ 428*) 12 hr. to heat up and 15 min. to place on the core; cost of current was $1.70 with power at $25 per hp-yr. A special bolt *22* is provided for backing away the movable heart when necessary. One maker puts the taper on the shaft and makes the outer surface of the hearts and the inner surface of the roll shells cylindrical. The ADVANTAGES claimed for this method of construction are strengthening of the shaft at the point of maximum strain and greater ease in rolling the shells. A serious disadvantage lies in the fact that the expensive shaft is subjected to a possibility of considerable wear with resulting necessity for replacement.

Shells are made of high-carbon steel rolled similarly to locomotive tires, or of forged chrome steel rolled or bored to size and taper, or of manganese steel cast and ground to proper shape. In old practice the shells were made of chilled iron, but, on account of the impossibility of making a uniformly hard shell, this material pits rapidly and badly with resultant loss in crushing efficiency For light service, rolled high-carbon steel shells are entirely satisfactory. An advantage claimed for them is that, owing to the fact that the surfaces are not extremely hard, there is less failure to nip than is encountered with harder shells. Likewise they do not crack readily and therefore can be worn down very thin before replacing.

There is great difference in steels from various sources. The products of local or little-known shops are particularly to be regarded with skepticism. A typical analysis of a good rolled-steel tire is: C, 0.70 to 0.80%; Si, 0.12 to 0.25%; S + P, 0.05% maximum; Mn, 0.65 to 0.85%; Cr, 0.75% maximum. Proper heat treatment is of first importance. Manganese-steel shells have longer life on coarse feed than rolled steel, but on fine feed there is much less difference unless the feed is very hard and abrasive, or a high reduction ratio is attempted. Price of rolled-steel shells (1939) is 12 1/2 to 15¢ per lb.; manganese-steel shells cost the same or slightly more; the price of chrome-alloy shells may run up to 30¢ per lb.

Thickness of new shells ranges normally between 3 and 6 in., but in some modern heavy-duty rolls shells are 9 in. thick. Thickness at discard ranges in general from 1/2-in. for small rolls to 2 1/2-in. on large, the average being between 3/4- and 1-in.

Wear of roll shells is due to abrasion resulting from slipping of the faces past the rock particles and to gouging by hard particles; abrasion normally predominates. Slipping occurs in bringing rock particles up to shell speed, and when nip failure occurs the particles ride for a time in the vee until either they are abraded to nippable size or some undersize feed sands the track. Wear in the form of circumferential troughs (CORRUGATION) is common in free-crushing of coarse feeds, especially if the rolls are working with large nip angles. Corrugation causes loss of capacity and increase in circulating load. Remedies are various. The best is to correct feed conditions either by decreasing the working nip angle (see p. 65) or by changes in those respects in which the operation departs from the optimum conditions. Decrease in speed frequently improves nip. Lateral shifting of one roll, best done at regular short intervals, *e.g.*, 24 hr., decreases but will not prevent corrugation. Some mills set emery bricks so that they are continuously against the shells under constant pressure. At VAN ROI mill (*101 J 465*) the use of such bricks tripled the life of fine-roll shells. In SOUTHEASTERN MISSOURI flanged shells are taken off and ground or turned down in a lathe, according to whether they are manganese or rolled steel. A 54×20-in. high-carbon steel shell can be turned down in 20 to 30 hr., dependent upon the extent of corrugation (*57 A 346*). Manganese steel corrugates less than rolled steel, but is difficult and expensive to grind down after corrugation starts; one week to grind back is reported (*53 CMJ 66*). For rolls with wide faces the shells have been made in two rings. At OHIO COPPER CO. (*99 J 748*) shells for 60×24-in. rolls were in two sections, one 10-in. width and the other 14-in., but this construction induced grooving at the joint. Shells already circumferentially corrugated were transversely corrugated to the same depth on 2-in. centers and put back into operation; the effect reported (*53 CMJ 66*) was to wear the resulting bumps down and thus tend to level off to the bottom of the old corrugations.

In a mill where rolls are used for crushing different sizes of material, partly worn shells from fine rolls may be transferred to the coarse rolls, provided these are of the same size, since the loss of efficiency in coarse rolls, due to slight pitting, is much less than in fine rolls. Corrugation other than that due to incorrect distribution of feed is substantially absent in choke-crushing.

Life of shells under varying conditions of service is given in Table 24. Consumption ranges, according to rock, to shell material and to method of crushing, from 0.01 to 0.1 lb. per ton crushed for chrome-alloy and for manganese steels and from 0.04 to 0.15 for high-carbon steels. Consumption in choke-crushing is less than in free-crushing. At BRITANNIA BEACH (*139 #7 J 34; IC 6619*) shells for a 54-in. roll, cast at a local foundry (0.5 to 0.65% C, 0.70 Mn, 0.6% Cr), 7 in. thick, were worn to 1-in. thickness before discard; consumption was 0.19 lb. per ton of new feed when operating in closed circuit with a 3/16-in. screen, taking about 50 tons new feed per hr.

Time for changing shells is largely dependent upon the mechanical equipment available and the method of operation. Shrunk-on shells take longer to remove and to replace than those that are set cold. Most mills allow one shift for a change (see Table 24). It is common practice to keep newly shod shafts set up on crane-served blocks, in which case a change can be effected in 4 to 6 hr., much of the time lost being consumed in dismantling the feed chute and service platform.

Housing is made of cast iron or sheet steel. In most cases the lower part is cast integral with the frame and provided with a flange for bolting on the upper part. Most makers provide the upper part with cast-iron ribbed sides and sheet-steel cover. Hinged inspection doors of sheet steel or of canvas

ribbed with steel straps are provided over both rolls. The housing is made as nearly dustproof as is practicable. The shaft openings are covered with special devices to prevent emission of dust and grit. The sides of the housing are made sufficiently strong and stiff to carry the weight of the feed hopper and in some cases also to carry a feeder.

Cheek plates are made of hard iron or, rarely, of special steel. They are bolted to the inside of the housing in the hopper-shaped opening formed by the sides of the housing and the upper surfaces of the rolls. They should be made capable of lateral adjustment by means of bolts projecting through the housing so that they can be properly crowded up against the edges of the rolls to prevent the passage of uncrushed material between the sides of the rolls and the housing. Life of cheek plates is given in Table 24.

Feed hopper is placed to one side of the opening between the rolls in order to deliver the stream as nearly as possible to the center of the opening. It should be furnished with distributing plates for spreading the stream of feed across the full width of the roll faces. Adjustable side plates are also a convenience. Liner plates for the hopper are made of hard iron or manganese steel. The life of liner plates is from 30 days to several years. Commonly they are changed with the cheek plates.

Lubrication of the main bearings in small rolls is best effected with grease, the consistency being varied with the temperature. Large rolls are usually lubricated with oil; in such case they should be fitted with an efficient circulating and filtering system, and the bearing ends must be covered with oil- and dustproof caps. Lubricant consumption ranges from about 2 to 50 lb. per 24 hr. according to the size of rolls, the kind of lubricant, and the efficiency and care in use.

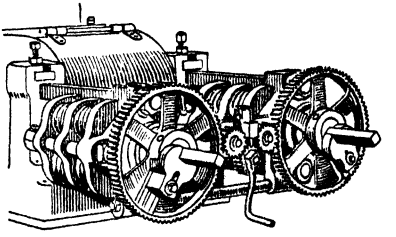

FIG. 45. End adjustment for setting rolls.

Manufacturers. Allis-Chalmers Mfg. Co., Austin-Western Road Mach. Co., Birdsboro Steel Fdy. & Mach. Co., Chalmers & Williams, Colorado Iron Wks. Co., Denver Equipment Co., Eastern Iron & Mach. Co., Gruendler Crusher & Pulverizer Co., Jeffrey Mfg. Co., Kennedy-Van Saun Mfg. & Eng. Corp., Link-Belt Co., McLanahan & Stone Corp., Stephens-Adamson Mfg. Co., Sturtevant Mill Co., Taylor-Wharton Iron & Steel Co., Traylor Eng. & Mfg. Co., United Iron Wks. Co., Vulcan Iron Wks., Webb Corp.

Adjustments possible in well-designed rolls are (*a*) the distance between roll faces and (*b*) lateral adjustment of one or both roll shafts. Adjustment of the distance between faces, or ROLL SETTING, is accomplished by changing the distance between the faces of the nuts at the two ends of the tension rods and by change of the total thickness of the shims placed between the forward end of the movable bearing and the frame. In making this adjustment it is important that the shafts be kept parallel. In most rolls this is accomplished by pinning the nuts at one end of the tension rods and so arranging the nuts at the other end that they are both moved equally and dependently by the adjusting mechanism. Fig. 45 illustrates the adjusting mechanism on one make of rolls in which the adjusting nuts are turned by spur gears operated by intermediate gears from a common pinion. This mechanism draws the movable-roll bearing up against a block of shims whose total thickness is that necessary to keep the roll faces a predetermined distance apart. As roll shells wear down, the shims are changed to allow the roll shafts to be drawn closer together and thus compensate for wear. This end-adjustment mechanism provides for backing the movable roll away from the fixed roll in order to free the rolls in case of clogging. It also allows the rolls to be backed away from or drawn up to the shims while running under load.

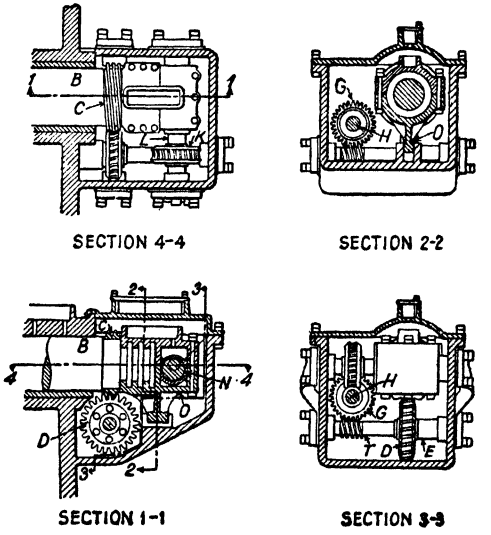

FIG. 46. Traylor automatic lateral adjustment for rolls.

Table 24. Performances

Item No.		1	2	3	4	5	6
Line No.	Plant	Retsof	N. J. Zinc Co.		U. S. S. R. & M. Co., Midvale *an*		
1	Size, diam. × face, in.	16×20 *an*	24×14	26×15	30×12	30×12	30×12
2	Set, in. *ca, ce*	5/16	Cl (0.04)	1/40	*bn*	*br*	*bn*
3	Speed: R.p.m.	300	140	122	80	105	80
4	Peripheral, f.p.m.	1,255	880	832	637	835	637
5	Feed: Kind of rock *bi*	*cf*	*106*	*106*	*124*	*124*	*124*
6	Character *ca*	.....	.....	SR	Sc	Sc	Sc
7	Tons per hr.: New	20	2	21	9.8	6.7	4.2
8	Total	20	8	35	.....	.....	.....
9	Circulating load, % *bm*	0	300	67	.....	.....	.....
10	Moisture, %	Dry	Dry	Dry	Dry	18	Dry
11	Ribbon factor, % *bw*	7.4	47	325	19.8	94	8.5
12	Method of feeding *ca*	OS	OS	SB	Choke	*bs*	Choke
13	Size, in. *bx*	>8/8	*1*	*2*	<1 1/2	<5/8	<1 1/2
14	80%—size, in. *cb*	.....	0.082	0.083	0.95	0.49	0.95
15	Product: Size, in. *bx*	<3-m.	*1*	*2*	<5/8	<1/4	<5/8
16	80%-size, in. *cb*	.....	0.063	0.047	0.44	0.15	0.44
17	Power: Motor hp.	15	.....	50	20	15	25
18	Consumed, hp.	6.5	.....	.....	15	18	15
19	Type of drive *ca*	B	Ctr., B	B	B	B	B
20	Method of starting *ca*	Com.St.	.....	SRM	.....	.....	.....
21	Attendance, machines per man	*aj*	6	1	.....	.....	.....
22	Running time: Hr. per day	4	.....	16	.....	.....	.....
23	Lost, %	0	5	*c*	4	7.5	2
24	Causes of lost time *ca*	.....	Ch	.....	*bo*	*bo*	*bo*
25	Lubricant: Kind *ca*	Gr.	Gr.	Gr.	Gr.	Gr.	Gr.
26	Consumption, lb. per shift	Negl.	1	8	18	18	18
	Life of parts						
27	Shell: Days *ca*	Ind.	900	380	148	122	380
28	Prevention of corrugation	None	*a, b*	*d, b*	*y*	*y*	*y*
29	Time to change, hr.	.....	8	*e*	8	10	.....
30	Thickness: New, in.	.....	3 1/8	2 1/2	3 1/2	3 1/2	3 1/2
31	Discarded, in.	.....	1/2	1	1/2	1/2	1/2
32	Material *ca*	Mn	St	Cr	*bp*	*bp*	*bp*
33	Consumption, lb. per ton new feed	.....	.....	.....	.....	.....	.....
34	Surface	Sm.	Sm.	Sm.	Sm.	Sm.	.....
35	Method of setting	.....	.....	H	*bq*	*bq*	*bq*
36	Cheek plates: Days	Ind.	5-yr.	90	100	100	90
37	Material	Mn	.....	CSt	HCI	HCI	HCI
38	Feed chute: Days	Ind.	.....	700	.....	.....	.....
39	Material	St	.....	St	.....	.....	.....
40	Discharge chute: Days	Ind.	.....	120	.....	.....	.....
41	Material	St	.....	St	.....	.....	.....
42	Shafts, days	Orig.	Orig.	Orig.	Orig.	360	Orig.
43	Bearings, days	Ind.	10 yr.	650	150	120	310
44	Springs, days	.....	10 yr.	Orig.	350	400	Orig.
45	Crane service	No	.....	No	.....	.....	.....
	Derived data						
46	Nip angle, deg.-min.	.....	18–44	9–18	21–24	13–36	21–24
47	Reduction ratios: R_L *bz*	.....	1.4	1.4	2.6	2.5	2.6
48	R_W *bj*	.....	2.7	4.4	2.4	1.3	2.4
49	R_n *bl*	.....	15.5	26.4	2.6	3.2	2.6
50	R_{80} *bk*	.....	1.3	1.8	2.2	3.3	2.2
51	Reduction tons per hr. *cc*	.....	2.6	38	22	22	9.2
52	Efficiency *cd*	.....	.....	.....	1.5	1.2	0.6
53	Source of data	*Q*	*Ed 1*	*Q*	*Ed 1*	*Ed 1*	*Ed 1*

a Manual change of alignment (fleet).
b Periodic burning of high spots.
c Practically none; repairs made on down shift.
d Changing distribution of feed.
e Out of commission 8 days; spare used.
f Segments bolted to mandrel of shell.
g 1/2-in. Armorite.
h Ground down weekly.
i Jig man attends.
j Only one roll driven.
k Hard-faced every 3 or 4 mo.
l Chrome-nickel-iron casting.
m Sides rubber, bottom HCS.
n Built up about once in 2 yr.
o Occasional choking with damp ore.
p High circulating load is necessary to obtain desired tonnage of 95% <14-m.
q Hard-facing on solid high-carbon steel core.

of rolls

7	8	9	10	11	12	13	14	15
Moorlight		Bunker Hill & Sullivan		St. Joseph Lead Co.		N. J. Zinc Co.		Calumet & Hecla
				Leadwood	Desloge			
30×14	30×14	36×14	36×14	36×15	36×15	36×16	36×16	36×16 *an*
1/4	Cl (0.02)	1/4	1/16	Cl (0.30)	Cl (0.22)	1/8	5/16	1/16
120	120	73	71	67	100	89	77	98
440	440	692	673	631	943	849	760	924
188	*ah*	*108*	*108*	*by*	*by*	*106*	*106*	*11*
.....	.....	SR	SR	Unsc.	Unsc.	SR	SR	SR
7	5	6.5	8.8	50	50	8	9	12
7	6	14.3	.....	165	250	32	40	36
0	20	120	.....	230	400	300	345	200
Dry	Dry	Moist	Moist	3	3	Dry	Dry	50
13.2	141	17	44	169	233	55	30	113
OS	OS	SB	OS	SB	OS	OS	OS	OS
<1 1/2	<1/4	*3*	*4*	*5*	*6*	*7*	*8*	*9*
0.95	0.16	0.81	0.42	0.48	0.38	0.30	0.62	0.63
<1/4	<10-m.	*3*	*4*	*5*	*6*	*7*	*8*	*9*
0.15	0.026	0.56	0.26	0.23	0.20	0.19	0.45	0.14
.....	.....	.....	.....	100	200	25	28	40
.....	.....	15	15	>100	175	21	23	35
Ctr., B	Ctr., B	Ctr., B	Ctr., B	B	B	Ctr., B	Ctr., B	B *f*
Com. St.	Com. St.	Rheo.	Rheo.	Com. St.	DC	Com. St.	Com. St.	Com. St.
af	*af*	*w*	*w*	4	3	6	6	4
16	16	24	24	24	24	16	16	24
2	2	.....	.....	±2	2	5	5	1
a, ag	*a, ag*	*x*	*x*	Ch	Ch	Ch	Ch	Ch
Gr.	Gr.	Gr.	Gr.	Gr.	Gr.	Gr.	Gr.	Gr.
2	2	1	1	2 1/4	2 1/2	1	1	1
1,000	1,000	175	240	*q*	*aa*	456	260	221
d	*d*	*y*	*y*	*q*	*aa*	*d, b*	*d, b*	None
16	16	8	8	4 to 5	SSD	8	8	4 to 7
4	4	3 1/2	3 1/2	.....	.....	3 1/2	3 1/2	3 1/2
1	1	3/4	3/4	.....	.....	1/2	1/2	1
Cr-Mo	Cr-Mo	Mn	Mn	*q*	CSt	RSt	RSt	Mn
0.01	0.01	0.05	0.06	0.0065	.....	.....	.....	2.6
Sm.	Sm.	Sm.	Sm.	Sm.	Sm.	Sm.	Sm.	Sm.
H	H	*bq*	*bq*	*r*	.....	.....	.....	.....
10 yr.	10 yr.	175	240	Ind.	*aa*	5 yr.	5 yr.	.....
HCl	HCl	WhI	WhI	St, *s*	Mn	Mn	Mn	.....
600	600	.....	.....	Ind.	150	10 yr.	10 yr.	.....
St	St	.....	.....	St	WhI	St	St	.....
600	600	90	90	Ind.	150	10 yr.	10 yr.	.....
St	St	Cl	Cl	.....	WhI	St	St	.....
300	300	5 yr.	5 yr.	4 yr.	Ind.	Ind.	Ind.	5 yr.
90	90	1 yr.	1 yr.	2 yr.	Ind.	2 yr.	2 yr.	5 yr.
Orig.	Orig.	5 yr.	5 yr.	5 to 6 yr.	Ind.	10 yr.	10 yr.	.....
Yes	Yes	ChB	ChB	*t*	Yes	Yes	Yes	Yes
34–0	7–0	17–6	13–32	13–28	11–14	12–0	17–12	19–48
6.0	3.9	1.4	1.0	1.4	1.4	1.0	1.0	4.1
3.5	7.4	2.5	5.0	2.9	2.8	2.6	2.0	7.1
3.6	38.0	4.2	14.8	3.6	4.7	8.1	3.5	15.7
6.3	6.2	1.4	1.6	2.1	1.9	1,6	1.4	4.5
44	31	9.1	14	105	95	13	13	54
.....	.....	0.6	0.9	@ 1.0	0.6	0.6	0.6	1.7
Q	*Q*	*Q*	*Q*	*Q*	*Q*	*Q, Ed 1*	*Q, Ed 1*	*Q, Ed. 1*

r Core shrunk on shaft.
s Welded to side.
t Air hoist.
u One man to 2 gyratories, rolls, and vibrating screens.
v Hard-faced after 6 wk.
w 6 rolls and 6 ball mills per man.
x Changing shell.
y Carborundum bricks.
z Across-the-line starter.
aa Hard-faced as needed.
ab One attendant to entire fine-crushing plant.
ac Machine too light; much choking, adjustment, and repair.
ad Very hard siliceous ore.
ae One man part time for 2 rolls.
af One man handles 2 rolls, 2 screens, and 1 rotary drier.

Table 24. Performances

Item No.		16	17	18	19	20	21
Line No.	Plant	Potash Co. of America		U. S. S. R. & M. Co., Midvale		New Jersey Zinc Co.	
1	Size, diam. × face, in.	36×16	36×16	36×16	36×16	36×16	36×16
2	Set, in. *ca, ce*	1/8	1/4	*br*	Cl (0.02)	0.09	5/8
3	Speed: R.p.m.	80	100	90	90	89	72
4	Peripheral, f.p.m.	754	943	860	860	840	680
5	Feed: Kind of rock *bl*	*al*	*am*	*124*	*124*	*106*	*106*
6	Character *ca*			Sc	Sc	Sc	Sc
7	Tons per hr.: New	15	15	11.2	5.6	6	15
8	Total	55	15	11.2	5.6	24	60
9	Circulating load, % *bm*	267	0	0	0	300	300
10	Moisture, %	Dry	Dry	20	20	Dry	Dry
11	Ribbon factor, % *bw*	106	12	13.8	39.1	57.6	67.1
12	Method of feeding *ca*	SB	SB	*bs*	*bs*	OS	OS
13	Size, in. *bx*	<1/2	<1/2	<5/8	<1/4	*10*	*11*
14	80%-size, in. *cb*	0.39	0.35	0.49	0.16	0.18	1.61
15	Product: Size, in. *bx*	10%>6-m.		<1/4	<0.053	*10*	*11*
16	80%-size, in. *cb*	0.72	0.30	0.15	0.02	0.082	1.42
17	Power: Motor hp.	25	15	50	50	25	24
18	Consumed, hp.	23	15	22	22	21	20
19	Type of drive *ca*	B	B	B	B	B	B
20	Method of starting *ca*	PB	PB				
21	Attendance, machines per man	4	2	2	2	6	6
22	Running time: Hr. per day	16	24				
23	Lost, %	Small	0	8	8	5	5
24	Causes of lost time *ca*	Ch		*bo*	*bo*	Ch	Ch
25	Lubricant: Kind *ca*	Oil	Oil	Gr.	Gr.	Gr.	Gr.
26	Consumption, lb. per shift			18	18	1	1
	Life of parts						
27	Shell: Days *ca*	*ao*	*ao*	87	87	203	260
28	Prevention of corrugation	None	None	*y*	*y*	*d, b*	*d, b*
29	Time to change, hr.			10	10	8	8
30	Thickness: New, in.			3 1/2	3 1/2	3 1/2	3 1/2
31	Discarded, in.			3/4	3/4	1/2	1/2
32	Material *ca*			*bp*	*bp*	St	St
33	Consumption, lb. per ton new feed						
34	Surface	Sm.	Sm.	Sm.	Sm.	Sm.	Sm.
35	Method of setting			*bq*	*bq*		
36	Cheek plates: Days			80	80	5 yr.	3 yr.
37	Material			HCI	HCI	Mn	Mn
38	Feed chute: Days						
39	Material						
40	Discharge chute: Days						
41	Material						
42	Shafts, days			300	300	15 yr.	15 yr.
43	Bearings, days			85	85	450	2 yr.
44	Springs, days			310	310	10 yr.	10 yr.
45	Crane service	Yes	Yes				
	Derived data						
46	Nip angle, deg.-min.	11–16	6–2	12–48	9–12	6–12	20–12
47	Reduction ratios: R_L *bz*	2.8	1.0	2.5	4.7	1.0	1.3
48	R_W *bj*	2.4	1.2	1.3	7.4	2.4	1.9
49	R_N *bl*	8.1	4.2	3.8	45.5	10.6	2.0
50	R_{80} *bk*	5.4	1.2	3.3	8.0	2.2	1.1
51	Reduction tons per hr. *cc*	81	18	37	45	13	16
52	Efficiency *cd*	3.5	1.2	1.7	2.0	0.6	0.8
53	Source of data	*Q*	*Q*	*Ed 1*	*Ed 1*	*Ed 1*	*Ed 1*

ag Belt repair.

ah Manganese-bearing limestone with some quarts.

al Spare roll.

aj Part time one man.

ak Intermittently.

al Sylvinite ore.

am Briquettes.

an Rigid.

ao Practically no abrasive wear; dents caused by steel only reason for changing shells.

ap General repairs: Electrical, rolls, belts.

aq Average per set of rolls, month of June, 1937: 82.4 gal. Sinclair crusher oil; 0.75 gal. red engine oil; 3.7 lb. soft cup grease; 0.5 gal. Calol compound.

ar Hot drive on tapered cone.

as About 1 gal. per day in winter and 5 gal. per day in summer.

at New feed from surge bin via pan feeder and

of rolls—*Continued*

22	23	24	25	26	27	28	29	30	31
New Jersey Zinc Co.	Mine La Motte *az*	New Jersey Zinc Co.				Colquiri	Eagle-Picher, Ruby.	Maitland	American Zinc Co.
36×16	36×18	36×32	36×36	36×36 *an*	36×36	42×16	42×16	43×16	43 1/2×16
1/16	Cl.	1/10	1 1/2	3/4	5/8	3/8	1/4	Cl (0.04)	Cl (0.08)
107	109	112	138	138	154	71	92	84	166
1,010	1,028	1,056	1,300	1,300	1,546	780	1,010	946	1,890
106	.....	*106*	*106*	*106*	*106*	*152*	?	*ad*	*102*
Sc	Unsc.	SR	Unsc.	Unsc.	Unsc.	SR	Unsc.	.....	Sc
4	25	50	35	55	35	30	30	10	18
16	150	85	35	55	65	30	30	25	.....
300	300	70	0	0	86	0	0	150	.....
Dry	5	Dry	Dry	Dry	Dry	Wet	Dry	2	Wet
57.5	.....	74	1.4	4.5	5.4	19	22	120	21.6
OS	OS	SB	OS	OS	OS	OS	OS	OS	OS
12	<3/4	*13*	*14*	*15*	*16*	1 5/8	<2	>1/2	<1 1/2
0.14	.....	0.25	2.27	2.12	1.33	0.78	1.4	.....	0.88
12	.....	*13*	*14*	*15*	*16*	.....	5% >1	<6-m.	<3-m.
0.084	.....	0.23	2.09	0.59	0.67	0.49	1.1	.....	0.10
29	125	100	50	50	75	60	.....	40	.....
24	125	.....	.....	.....	.....	.....	35	30	75
B	B	Ctr., B	Ctr., B	Ctr., B	Ctr., B	Ctr., B	Ctr., B	Ctr., B	Ctr., B
.....	DC	Clutch	Clutch	Clutch	Clutch	DC	SRM	Oil	.....
6	*ae*	1	1	1	1	2	1	*ab*	*i*
.....	20	16	16	16	16	24	18	16	24
5	2	*c*	*c*	*c*	*c*	10	.....	10 *ac*	.....
Ch	Ch	.....	.....	.....	.....	SSD	Ch	*ac*	Ch
Gr.	Gr.	Gr.	Gr.	Gr.	Gr.	Oil	Oil	Oil	Oil
1	4	30	5	5	20	1 qt.	1/2 gal.	1 gal.	1 qt.
304	*aa*	780	90	105	168	470	150	240	300
d, b	.....	*d, b*	*d, b*	*d, b*	*d, b*	AF, *h*	*d*	*a, d*	None
8	16	*e*	7	7	7	8	10	24	8 to 10
3 1/2	.....	3 1/2	3 3/8	3 3/8	3 3/8	4	5 3/4	4	4 5/8
1/2	.....	1	2 1/8	2 1/4	2 1/4	3/4	3/4	3/4	1 1/2
St	Mn-Cr	Mn	Mn	Mn	Mn	.....	Cr-Mo	TSt	Mn
.....	.....	.....	.....	.....	.....	.....	0.105	0.15	0.01
Sm.	Sm.	Sm.	Corr.	Corr.	Sm.	Sm.	Sm.	Sm.	Sm.
.....	.....	H	*f*	*f*	*f*	Shrunk	H	H	Shrunk
5 yr.	*aa*	.....	85	90	85	470	.....	.....	320
Mn	Cr-Ni-Fe	CSt	CSt	CSt	CSt	CI	.....	.....	HCI
.....	90	780	.....	.....	.....	90	.....	.....	60
.....	Cr-Ni-Fe	.....	.....	.....	.....	R, *g*	.....	.....	CI
.....	.....	120	70	70	70	90	.....	.....	60
.....	.....	St	St	St	St	R, *g*	.....	.....	CI
15 yr.	3 yr.	Orig.	Orig.	Orig.	Orig.	Orig.	.....	18 mo.	Orig.
2 yr.	40	780	5 yr.	5 yr.	5 yr.	470	300	240	2 yr.
10 yr.	Ind.	Orig.	.....	.....	.....	Orig.	.....	Orig.	Orig.
.....	*t*	No	Yes	Yes	Yes	Yes	Yes	No	Yes
7–48	.....	15–46	24–48	27–4	20–16	7–40	15–44	8–10	14–24
1.0	.....	2.0	1.5	1.2	1.9	1.3	1.3	.....	5.8
2.4	.....	4.4	1.2	2.0	1.9	1.5	4.7	.....	11.0
15.6	.....	9.6	1.2	1.8	2.0	3.3	4.8	28.0	14.2
1.7	.....	1.1	1.1	3.6	2.0	1.6	1.3	.....	8.8
6.8	.....	55	38	198	70	48	39	.....	158
0.3	.....	.....	.....	.....	.....	.....	1.1	.....	2.1
Ed 1	*Q*	*Q*	*Q*	*Q*	*Q*	*Q*	*Q*	*Q*	*Q*

elevator to screens; screen oversize to rolls by chute.

au Dry rolls do not corrugate appreciably. Feed to wet rolls is regulated by spreaders, and moisture is kept as low as possible.

av Broken bolts, setting rolls, changing shells.

aw Old grid liners.

ax 1/8 to 1/4 in., depending upon hardness of ore.

ay Edges only.

az St. Joseph Lead Co.

ba Overloaded.

bb Red engine oil, 2 bbl. per mo.

bc Variable-speed belt feeder.

bd 220,000 tons per set; 852 hr. crushing time.

be Power; changing shells.

bf Surge bin to screens, oversize to conveyor to feed chute.

Table 24. Performances

Item No.		32	33	34	35	36	37
Line No.	Plant	Chino	Utah Copper Co. Magna	Utah Copper Co. Arthur	Federal *az*	Britannia	Butte & Superior
1	Size, diam. × face, in.	43 1/2×16	44×16	44×16	48×24	54×20	54×20
2	Set, in. *ca, ce*	Cl (0.12)	1/8	1/8	Cl	1/4	Cl (0.03)
3	Speed: R.p.m.	120	98	110	115	.....	108
4	Peripheral, f.p.m.	1,385	1,050	1,359	1,445	.....	1,547
5	Feed: Kind of rock *bl*	*23*	*18*	*18*	.....	*31*	Granite
6	Character *ca*	.....	Sc	Sc	Sc	Sc	.....
7	Tons per hr.: New	52	63	50	100	60	29
8	Total	104	230	135	600	240	87
9	Circulating load, % *bm*	100	265	170	500	300	200
10	Moisture, %	15 to 20	Dry	4.9 *bt*	*3*	2	45
11	Ribbon factor, % *bw*	113	317	144	.....	.....	408
12	Method of feeding *ca*	OS	SB	*at*	OS	OS	SB
13	Size, in. *bx*	*17*	*18*	*19*	<1	*20*	*21*
14	80%-size, in. *cb*	1.05	0.68	1.1	.....	0.36	1.14
15	Product: Size, in. *bx*	*17*	*18*	*19*	.....	*20*	*21*
16	80%-size, in. *cb*	0.28	0.035	0.032	.....	0.32	0.043
17	Power: Motor hp.	300	250	2 @ 150	225	150	100
18	Consumed, hp.	75 to 100	150	150	225	120	70
19	Type of drive *ca*	.....	Ctr., B	B	B *j*	B	B
20	Method of starting *ca*	.....	*z*	Oil	Com. St.	.....	.....
21	Attendance, machines per man	2	12	12	6	5	4
22	Running Time: Hr. per day	.....	24	24	24	22	.....
23	Lost, %	1	2.9	2.5	<1	4	.....
24	Causes of lost time *ca*	*x*	*ap*	*ap*	Ch	*av*	*x*
25	Lubricant: Kind *ca*	Oil	*aq*	Oil	Gr.	Gr., oil	Oil
26	Consumption, lb. per shift	10.9	*aq*	*as*	6	1/2–1/3 gal.	12
	Life of parts						
27	Shell: Days *ca*	30	72	65 *bt*	*aa*	32	45
28	Prevention of corrugation	*a*	*d*	*au*	None	*a*	*a, d*
29	Time to change, hr.	3 1/2	7	3 to 6	8	4	8
30	Thickness: New, in.	5	5	5	.....	7	5 1/2
31	Discarded, in.	3/4	<1	1/2	.....	1	1
32	Material *ca*	Cru	RSt	RSt *bt*	.....	Mn-Cr	HCS
33	Consumption, lb. per ton new feed	.....	0.041	0.037	.....	.....	.....
34	Surface	Sm.	Sm.	Sm.	Sm.	Sm.	Sm.
35	Method of setting	Shrunk	*ar*	*ar*	.....	Shrunk	Shrunk
36	Cheek plates: Days	365	72	65 *bt*	.....	180	90
37	Material	CI	WhI	WhI	.....	Cr	CI
38	Feed chute: Days	.....	365	365	.....	90	.....
39	Material	.....	WhI	CI	.....	*aw*	.....
40	Discharge chute: Days	.....	365	365	.....	90	.....
41	Material	.....	WhI	CI	.....	Cr	.....
42	Shafts, days	Orig.	Ind.	5 to 6 yr.	Ind.	Ind.	Orig.
43	Bearings, days	1 yr.	Ind.	65 *bt*	Ind.	30	270
44	Springs, days	Orig.	Ind.	Ind.	Ind.	Ind.	Orig.
45	Crane service	.....	Yes	Yes	Yes	Yes	.....
	Derived data						
46	Nip angle, deg.-min.	13–48	16-44	13–42	.....	11–28	11–48
47	Reduction ratios: R_L *bz*	4.0	16.7	16.7	.....	2.9	16
48	R_W *bj*	7.3	7.1	7.1	.....	3.5	29
49	R_N *bl*	9.7	9.7	9.7	.....	6.0	45.7
50	R_{80} *bk*	3.7	19.4	34.4	.....	1.1	26.5
51	Reduction tons per hr. *cc*	192	1,220	1,720	.....	66	770
52	Efficiency *cd*	2.6 to 1.9	8.1	11.5	.....	0.6	11.0
53	Source of data	*Ed 1*	*Q*	*Q*	*Q*	*Q*	*Ed 1*

bg Hp-hr. per ton.
bh 0.58 kw-hr. per ton.
bi Figure number of flowsheet in Sec. 2.
bj See Eq. 3. Shape factor 1.7.
bk See Eq. 5. *bl* See Eq. 13*a*.
bm Based on new feed.
bn To pass 5/8-in. ring.
bo Changing shells, babbitting bearings, alignment, choking.
bp Midvale steel. *bq* Wooden wedges.
br To pass 7-mm. rd. hole.
bs Shaking launder.
bt Part of the roll battery is run wet (10.5% moisture); under substantially similar load conditions the wear of shells and cheek plates is doubled and the life of bearings halved. Rubber liners replace cast iron in the feed and discharge chutes.

of rolls—*Continued*

38	39	40	41	42	43	44	45	46
American Zinc Co.	Alaska-Gastineau	N. J. Zinc Co.	Bonne Terre *az*	Balmat *az*	Alan Wood	McIntyre Porcupine	Desloge *az*	
54×20	54×20	54×24	54×24	57×18	60×18	60×30	64×26	64×24
Cl (0.16)	3/16	5/8	1/16	1/8 to 1/4	Cl (0.04)	1	7/8	3/8
92	104	60	73	90	120	52	76	76
1,317	1,490	848	1,036	1,342	1,880	827	1,282	1,282
102	Siliceous	*106*	*100*	*115*	*93*	*56*	As *100*	As *100*
.....	.....	Unsc.	Sc	Sc	SR	.....	.....	.....
58	42	25	50	.....	99	83	150	125
116	210	50	250 *p*	.....	322	.....	300	600
100	400	100	400	.....	225	0	100	380
Dry	Dry	1	3	Dry	Dry	Dry	3	3
80	109	11.4	470	.....	690	9.7	30	139
OS	.....	OS	OS	OS	.....	.....	OS	OS
22	*23*	.....	*24*	*25*	1/2~1/8	*26*	*27*	*28*
1.96	1.15	.....	0.42	0.92	0.27	3.89	0.94	0.31
22	*23*	.....	*24*	*25*	<1/8	*26*	*27*	*28*
0.32	0.053	.....	0.24	0.50	0.031	1.33	0.72	0.26
150	150	100	150	2 @ 75	.....	150	150	250
95	148	85	150	90	125	59	125	250
B	B	Ctr., B	B *j*	Tex.	Ctr., B	.....	B	B
.....	.....	Com.St.	Com.St., CB	PB, M	.....	.....	DC	DC
2	3 1/3	1	2	*u*	.....	1	3	3
.....	.....	8	24	14	.....	.....	24	24
5	.....	.....	<1	.....	.....	.....	2	2
bu	.....	.....	Mech., *o*	*x*	.....	.....	Ch	Ch
Oil	Oil	Oil	Gr.	Oil	Oil	.....	Gr.	Gr.
8	12	1 gal.	1 to 1 1/2	1 gal.	.....	.....	2.5	2.5
120	60	.....	*k*	*q*	.....	563	*aa*	*aa*
a	*a, d*	AF *b*	*k*	*q, d*	.....	*y*	*aa*	*aa*
10	2.5	24	SSD	.....	.....	100	SSD	SSD
5	5	4 1/4	.....	5	.....	4	.....	.....
1 1/2	1 1/8	.....	.....	.....	.....	3/4	.....	.....
HCS	HCS	RSt	*k*	*q*	*bp*	HCS	CSt	CSt
.....	0.13	.....	.....	.....	0.15	.....	.....	.....
Sm.	Sm.	Sm.	Sm.	Sm.	.....	Sm.	Sm.	Sm.
Shrunk	Shrunk	.....	.....	*r*	.....	.....	.....	.....
1,100	60	.....	150	*v*	.....	100	*aa*	*aa*
CI	CI	.....	*l*	CSt	.....	Mn	Mn	Mn
.....	.....	.....	300	.....	.....	.....	150	150
.....	.....	.....	*m*	.....	.....	.....	WhI	WhI
.....	.....	.....	300	.....	.....	.....	150	150
.....	.....	.....	R	.....	.....	.....	WhI	WhI
Orig.	Orig.	.....	*n*	.....	.....	Orig.	Ind.	Ind.
Orig.	160	.....	150	.....	.....	300	Ind.	Ind.
Orig.	Orig.	.....	Orig.	.....	.....	Orig.	Ind.	Ind.
.....	.....	Yes	Yes	Crawl	.....	.....	Yes	Yes
16–32	9–30	.....	18–11	14–15	6–50	2–60	7–30	6–30
4.8	16.1	.....	2.9	1.5	4.2	2.0	1.4	1.4
9.2	4.8	.....	14.1	4.5	7.3	2.9	1.0	1.6
9.1	7.6	.....	22.7	8.1	38.0	1.9	2.4	4.8
6.1	21.7	.....	1.8	1.8	8.7	2.9	1.3	1.2
354	910	.....	90	.....	860	241	195	150
3.7	6.2	.....	0.6	.....	6.9	4.1	1.6	0.6
Ed 1	*Ed 1*	*Q*	*Q*	*Q*	*T*	*Ed 1*	*Q*	*Q*

bu Broken shells; jammed threads on tension-rod bolts; loose pulleys.
bv Traylor M.
bw See p. 72.
bx Numbers in italic are column numbers in Table 24*a*.
by Dolomite with some chert.
bz See Eq. 1.
ca For meaning of abbreviations see list below.
cb See Eq. 4.
cc Line 7 × line 50.
cd See p. 17.
ce Numbers in parenthesis are estimated on basis given on p. 72.
cf Rock salt.
AF Automatic feet.
B Belt.
BP Boiler plate.
CB Circuit breaker.
CC Closed circuit.
Ch Choking.

Table 24. Performances

Item No.		47	48	49	50	51	52
Line No.	Plant	Chino	Nev. Cons., Ray	Alaska-Gastineau	Sherritt-Gordon	Hudson Bay	Cons. M. & S. Co.
1	Size, diam. × face, in.	72×20	72×20	72×20	72×24	72×24	74×20
2	Set, in. *ca, ce*	1/8	1	5/8	1/8	3/8	1/4
3	Speed: R.p.m.	105	88	108	70	89	70
4	Peripheral, f.p.m.	1,980	1,857	2,060	1,315	1,876	1,345
5	Feed; Kind of rock *bi*	*23*	Schist	Siliceous	.....	Hand	*116*
6	Character *ca*	Unsc.	.....	Sc	Sc	Sc	Sc
7	Tons per hr.: New	200	.....	250	150	188	160
8	Total	800	.....	330	350	.....	340
9	Circulating load, % *bm*	300	.....	33	133	CC	112
10	Moisture, %	4.5	Dry	Dry	Dry	.....	Dry
11	Ribbon factor, % *bw*	469	.....	37.2	257	.....	146
12	Method of feeding *ca*	SB, P	OS	.....	SB	.....	*bf*
13	Size, in. *bx*	*29*	<3	*30*	<1	<1 1/2	*31*
14	80%-size, in. *cb*	.....	2.0	1.5	0.60	0.94	0.65
15	Product: Size, in. *bx*	*29*	<1	*30*	<1/4	<5/8	*31*
16	80%-size, in. *cb*	.....	0.75	1.2	0.088	0.48	0.42
17	Power: Motor hp	300	.....	150	150	2 @ 125	2 @ 75
18	Consumed, hp.	230	.....	80	150	250	150
19	Type of drive *ca*	B	Ctr., B	B	.....	.....	Tex.
20	Method of starting *ca*	*z*	Com.St.	.....	Com.St.	.....	.....
21	Attendance, machines per man	3	1	2	.....	.....	*aj*
22	Running time: Hr. per day	23	20	.....	13	.....	21
23	Lost, %	.....	None	.....	.....	.....	1
24	Causes of lost time *ca*	*x*	.....	.....	.....	.....	*be*
25	Lubricant: Kind *ca*	Gr, Oil	Oil	Oil	Gr.	Gr.	Gr.
26	Consumption, lb. per shift	1.5 to 6 gal.	3 gal.	12	.....	.....	0.9
	Life of parts						
27	Shell: Days *ca*	102	400	80	260	.....	200
28	Prevention of corrugation	*d*	*a*	*a, d*	.....	.....	*y, ak*
29	Time to change, hr	4	*ai*	2 1/2	24	.....	6
30	Thickness: New, in.	8	6 1/8	6	8	.....	7
31	Discarded, in.	1 1/2	2	5/8	1 1/2	.....	1
32	Material *ca*	St	.....	HCS	Mn	Had	Cr
33	Consumption, lb. per ton new feed	0.068	0.01	0.054	0.06	0.05	0.025
34	Surface	Sm.	Sm.	Sm.	Sm.	Sm.	Sm.
35	Method of setting	Shrunk	.....	Shrunk	.....	.....	Shrunk
36	Cheek plates; Days	.....	.....	*80*	.....	.....	*30*
37	Material	WhI	WhI	CI	.....	.....	CI
38	Feed chute: Days	.....	150	.....	.....	.....	30
39	Material	St	BP	.....	.....	.....	CI
40	Discharge chute: Days	.....	210	.....	.....	.....	60
41	Material	Cement	WhI, BP	.....	.....	.....	CI
42	Shafts, days	.....	Ind.	Orig.	.....	.....	Orig.
43	Bearings, days	180	Ind.	160	.....	.....	200
44	Springs, days	.....	Ind.	Orig.	.....	.....	Orig.
45	Crane service	Yes	Yes	.....	Yes	.....	Yes
	Derived data						
46	Nip angle, deg.-min.	18–15	10–50	14–36	8–38	8–50	7–40
47	Reduction ratios: R_L *bz*	.....	3.0	1.3	4.0	2.4	1.4
48	R_W *bj*	.....	1.8	1.9	4.9	2.3	2.5
49	R_N *bl*	.....	2.4	3.5	15.5	5.3	8.0
50	R_{80} *bk*	.....	2.7	1.2	6.8	2.0	1.5
51	Reduction tons per hr. *cc*	.....	.....	300	1,020	376	240
52	Efficiency *cd*	.....	.....	3.7	6.8	1.5	1.6
53	Source of data	*Q*	*Q*	*Ed 1*	*Q*	*T*	*Q*

ChB Chain blocks.
Cl Set close; number following in parenthesis is estimated mean set.
Com. St. Compensated starter.
Corr. Corrugated.
Cr Chrome steel.
Cr-Mo Molychrome.
Cru Crucible steel.
CSt Cast steel.
Ctr Countershaft.
DC Drum controller.
Gr Grease.
H Conical heart, see Fig. 44.
Had. Hadfields.
HCCS High-carbon cast steel.
HCI Hard cast iron.
HCS High-carbon steel.
Ind. Indefinitely long.

of rolls—*Continued*

53	54	55	56	57	58	59	60	61
McIntyre Porcupine	International Nickel Co.	Noranda	Miami	Inspiration		Calumet & Arizona		New Cornelia
78×18	78×18	78×20	78×24	78×24	78×24	78×24	78×24	78×24
ax	0.16	3/16	Cl (0.08)	3/8	0.22	3/4	0.3	0.22
123	110	125	158	110	110	105	105	120
2,512	2,245	2,550	3,220	2,245	2,245	2,140	2,140	2,450
66	Sulphide	*57*	22	Porphyry	Porphyry	Quartz	Quartz	20
Sc	Sc	Sc	.....	Medium	Medium	.....	.....	Hard
265	260	220	.....	450	450	600	@ 450	251
.....	.....	308	.....	450	.....	.....	.....	.....
.....	CC	40	.....	0	CC	CC	CC	CC
Dry	Dry	1.5	Dry	Dry	Dry	Dry	Dry	Dry
91	.....	93	.....	129	.....	.....	.....	.....
OS	.....	SB *bc*	.....	.....	.....	.....	.....	.....
52	3/4~3/16	<3/4	<5/8	<1 1/2	<5/8	<3 1/2	<1 1/4	>3/4
0.51	0.58	0.58	0.39	0.94	0.55	2.4	0.70	0.46
52	2.9% >4-m.	<3/16	<1/4	<5/8	<3/8	<1 1/4	<1/2	13.5% >4-m.
0.28	0.10	0.08	0.10	0.47	0.15	0.50	0.20	0.10
2 @ 150	2 @ 200	200	2 @ 150	2 @ 225	2 @ 225	2 @ 125	2 @ 125	2 @ 125
200 to 250	160 to 180	*ba*	*bh*	0.97 *bg*		1.07 *bg*		1.22 *bg*
Tex.	B	Tex.	B	B	B	B	B	B
PB	.....	TR	.....	.....	.....	.....	.....	.....
.....	.....	1	.....	.....	.....	.....	.....	.....
16	.....	18	.....	.....	.....	.....	.....	.....
.....	.....	Little	.....	.....	.....	.....	.....	.....
.....	.....	.....	.....	.....	.....	.....	.....	.....
Oil	Oil	*bb*	Oil	Oil	Oil	Gr.	Gr.	Oil
1/2 gal.	.....	*bb*	.....	.....	.....	.....	.....	.....
83	.....	*bd*	.....	.....	.....	.....	.....	.....
y, ay	.....	None	.....	.....	.....	.....	.....	.....
10 to 14	.....	6	.....	.....	.....	.....	.....	.....
8 11/16	.....	8 3/4	.....	.....	.....	.....	.....	.....
@ 2	.....	2 1/2	.....	.....	.....	.....	.....	.....
Cr	*bv*	Mn	*bp*	*bp*	*bp*	HCCS	HCCS	*bp*
0.10	0.095	0.08	0.042	0.075		0.075		0.138
Sm.	.....	Sm.	.....	Sm.	Sm.	Sm.	Sm.	Sm.
.....	.....	H	.....	.....	.....	.....	.....	.....
4 yr.	.....	90	.....	.....	.....	.....	.....	.....
Mn	.....	Mn	.....	.....	.....	.....	.....	.....
.....	.....	.....	.....	.....	.....	.....	.....	.....
.....	.....	.....	.....	.....	.....	.....	.....	.....
.....	.....	.....	.....	.....	.....	.....	.....	.....
HCl	.....	.....	.....	.....	.....	.....	.....	.....
Ind.	.....	Ind.	.....	.....	.....	.....	.....	.....
168 to 252	.....	180	.....	.....	.....	.....	.....	.....
Ind.	.....	Orig.	.....	.....	.....	.....	.....	.....
Yes	.....	Yes	.....	.....	.....	.....	.....	.....
15–20	6–30	6–10	6–30	8–38	4–40	13–48	8–0	5–30
1.0	2.9	3.9	2.5	2.4	1.6	2.8	2.5	2.9
4.6	2.8	2.3	4.6	2.3	1.7	2.7	2.4	2.0
10.8	13.5	10.8	25.0	5.7	9.4	3.2	7.1	9.4
1.8	5.8	7.3	3.9	2.0	3.7	4.8	3.5	4.6
477	1,510	1,610	.....	900	1,665	2,880	@ 1,575	1,155
2.1	8.9	±7	.....	5.9		6.9		3.8
Q	*T*	*Q*	*T*	*T*	*T*	*T*	*T*	*T*

M Magnetic clutch.
Mn Manganese steel.
Orig. Original still in service.
OS On stream.
P Pulley feeder.
PB Push button.
R Rubber.
Rheo. Rheostat.
RSt Rolled steel.
SB Surge bin.
Sc Scalped.
SRM Slip-ring motor.
SSD Scheduled shutdowns.
St Steel.
T Traylor Eng. & Mfg. Co.
Tex. Tex-rope; V-belt.
TR Time relay.
TSt Tire steel.
Sm. Smooth.
SR Short-range.
Unsc. Unscalped.
Whl White iron.

Side adjustment is necessary to prevent flanging and circumferential corrugation. To prevent flanging, the range of side adjustment must be such that either edge of both rolls can be made to run for a part of the time, at least, on the face of the other roll. To prevent corrugation, rolls should be shifted through a distance of about 0.6 times the diameter of the largest particles in the feed. Lateral adjustment is accomplished manually or automatically. At SILVER KING COALITION (*99 J 615*) the life of shells on fine-crushing rolls was increased from 90 da. to 2 yr. by installing rolls with manual fleet and adjusting every 16 hr. The objection to manual adjustment is that it is likely to be forgotten or purposely neglected by the roll operator and that a short period of neglect may result in ruining the surface of a pair of shells. The only objection to automatic lateral shifting lies in the difficulty of making a simple, durable, and certain shifting mechanism.

Several operators have reported satisfactory performance of the Traylor mechanism shown in Fig. 46, but its use is limited. In this device the worm C cut on one end of the fixed-roll shaft B operates the worm wheel D on the transverse shaft E, set below the main shaft. The worm T on shaft E in turn drives the worm wheel G on shaft H. A worm on the other end of shaft H drives the worm wheel K on shaft L. Shaft L carries an eccentric sleeve N, fitted to a slide in a machined recess in the thrust collar O. This collar carries grooves into which fit corresponding collars cut on the end of shaft B. Lateral motion of the eccentric sleeve N is thereby transmitted to the shaft B which is caused to move backward and forward along the line of its axis through a distance determined by the throw of the eccentric N. This mechanism is enclosed in a dustproof case cast integral with one side of the roll frame. The case carries bearings for the various shafts. Variation in amount of lateral movement, or FLEET, is accomplished by changing the eccentric shaft L. The chain of gears is such that one complete cycle of roll-shaft movement is completed in about 30 min.

Sectionalizing. Most makers will furnish rolls up to 30-in. diameter sectionalized so that the heaviest piece does not exceed 300 or 350 lb.

Requirements for ideal rolls are that they should be rugged, simple in construction, and compact, and the working parts should be readily accessible; worn parts should be capable of easy change with as little dismantling of the apparatus as possible. Springs should exert a pressure sufficient to crush the hardest rock and yet should be sufficiently flexible to pass unbreakable substances without bending the shafts or breaking the castings. A substantially dustproof housing and large dust- and gritproof, well-lubricated bearings should be provided. The mechanism for adjustment for distance between roll faces should be capable of rapid and easy operation, in order to facilitate clearing the rolls in case of clogging, it should not necessitate a change in spring pressure, and it should advance both sides simultaneously in order to maintain proper alignment of shafts. If possible there should be automatic lateral adjustment of one of the roll shafts. Fleeting devices, however, add considerably to the first cost, and thorough investigation of their trustworthiness should be made before purchase.

Performances at a number of mills are shown in Table 24.

Angle of nip n is the angle formed by the tangents to the roll faces at the points of contact therewith of particles to be crushed. This angle is shown as angle ACB, Fig. 47, a. Particle P, which is to be crushed, is assumed to be spherical. If r is the radius and D the diameter of the rolls, d the diameter of particle, and s the distance apart of roll faces along the line joining the centers of the rolls, the following relation holds:

$$\cos\frac{n}{2} = \frac{r + s/2}{r + d/2} = \frac{D + s}{D + d}$$

Neglecting gravity, the particle is acted upon by forces applied at the points of contact in directions indicated by the lines F (Fig. 47, b). These forces can be resolved (considering one side only) into a normal force N and tangential force T. If the normal and tangential forces are resolved into their horizontal and vertical components respectively, it will be seen that the particle will be drawn down when the vertical component of T, acting downward, exceeds the vertical component of N, acting upward. The limiting condition is reached when the vertical components of T and N are equal but opposite in direction. Under this condition the particle will neither be nipped nor thrown out of the rolls but will ride in the hopper formed by the converging faces. With this condition the following equations may be written: $N_v/N = \sin n/2$; $T_v/T = \cos n/2$. Dividing the first equation by the second, $\tan n/2 = TN_v/NT_v$. But under the assumption $T_v = N_v$. Therefore $\tan n/2 = T/N$. From the ordinary relations of mechanics T/N = tangent of the angle of friction. For stone on iron the coefficient of friction (= tangent of the angle of friction) is about 0.3. Substituting this value in the above equation, $\tan n/2 = 0.3$; $n/2 = 16° 42'$, and $n = 33° 24'$.

In practice the nip angle rarely exceeds 25°. The average nip angle in 56 sets of rolls reported from the mills was 12° 44′ and the median was 12° 0′. The range in angle was

from 4° 40′ to 27° 4′. The angle averaged 19° 54′ for >2-in. feeds, 14° 28′ for feeds between 1- and 2-in., 11° 12′ for feeds between 0.5- and 1-in., and 9° 20′ for feeds smaller than 0.5-in. The averages for the coarser sizes are smaller, however, on account of the use of large rolls to get capacity. The larger angles used with coarse feeds (mills 25, 26, and 44) may be taken as a safe maximum figure.

Since angle of nip decreases with increase in roll diameter, increase in set, and with decrease in size of feed particle, it follows that large rolls must be used for coarse feeds unless a small ratio of $d : s$ is acceptable.

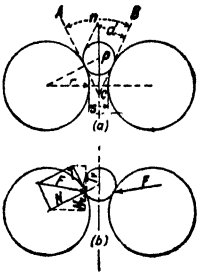

FIG. 47. Nip angle of rolls.

Failure to nip, if not gross, can always be overcome by transverse corrugation of the shell at one or more places, but such expedients introduce a periodic shock in operation which tends to cause vibration and flapping drive belts, and also accelerates roll wear and aggravates breakage of shells. Slight slipping of scalped feed in free-crushing can be corrected by diverting a small amount of undersize to the feed, *e.g.*, by placing a longitudinal blank strip on a vibrating feed screen; the principle is that of sanding the track; actually the small particles in the vee between roll face and large sliding particle serve to reduce the nip angle over the areas at which they make common contact. At HARTLAND-VERONA GRAVEL CO. (*42 #1 RP 38*), failure to nip was decreased by stepping the roll faces to produce the same effect as in the bowl of the standard cone crusher (Fig. 39); steel consumption was, at the same time, materially reduced.

Diameter of rolls required for various sizes of feed at different nominal maximum reduction ratios may be determined by Eq. 12, which is obtained by substituting the value for cos 12 1/2° in Eq. 11 and making the obvious transformation and approximation.

$$D = 40(t - s) = \frac{40d}{F_s}\left(1 - \frac{1}{R_w}\right) \tag{12}$$

where d = limiting size of feed and t is thickness of the thickest feed particle (presumably also the largest). The corresponding square-mesh limiting screen is tF_s. By rearrangement of Eq. 12

$$t = s + D/40 \tag{13}$$

which is the basis for the manufacturers' tables giving the largest recommended feed for various roll diameters. Conversely, the NOMINAL MAXIMUM REDUCTION RATIO (R_N) possible with rolls of a given diameter and setting may be derived from the equation

$$R_N = (40s + D)/40s \tag{13a}$$

for a 25° nip angle.

In practice coarse-crushing rolls (feeds coarser than 1-in.) are rarely less than 60-in. diameter; rolls for crushing intermediate sizes (1-in. to 1/2-in.) range from 36-in. to 78-in. according to capacity demands; for fine feeds the usual diameters are 36 or 42 in., with larger diameters used for heavy duty; use of rolls less than 36-in. diameter is unusual in metalliferous-ore concentrators.

Reduction ratios. The limiting ratio (Eq. 1) is the one usually stated; it ranges (Table 24) from 1.0 to 2.0 for light-duty rolls in the gravity-concentration mills cracking down slowly in order to minimize slime production, and for heavier-duty rolls in coarse intermediate service; it is from 2 to 4 for the average run of heavy-duty choke-crushing service; and runs up to 15 to 20 in very heavy duty choke-crushing with high circulating loads when making 10-m. ball-mill feeds. Working ratios (Eq. 3) average 1 1/2 to 2 times the limiting ratios in light-duty rolls running, in general, with light spring pressures; the failure of the limiting ratio to follow arises from the spreading of the rolls when choke-crushing conditions occur. Working ratio and limiting ratio are substantially the same in heavy-duty service; in extra heavy service, typified by UTAH and ALASKA-GASTINEAU, the excess of the limiting ratio is due to interparticle crushing and grinding incident upon maintenance of a substantially continuous ribbon several particles thick, subjected to heavy spring pressure. The nominal maximum ratio (Eq. 13*a*), when compared with the working ratio, is a useful criterion of the reliability of the data, or of the assumptions made in working them up; if the working ratio exceeds the nominal maximum, the implication is that the rolls are working above the allowable nip angle, and when the calculation has involved a preceding calculation of mean spacing in rolls set close (Table 24, line 2), the result of this calculation is brought into question. The excess in working ratio shown in Table 24, Column 26, is due to the fact that the nominal maximum ratio is based on an allowable nip angle of 25°, while the data indicate that this roll is working at 27°. High nominal maximum ratios correlate in general with close settings and/or large-diameter rolls. The 80% ratio (Eq. 5) is used primarily for calculation of capacity; an excess of this value over the limiting ratio is normal owing to the great concaving effect that a small amount of tramp oversize has on the cumulative sizing curves for fine materials.

Table 24a. Screen tests for Table 24 (Percentages retained on screens designated)

Ref. No.	Plant	Material	4-in.	3	2	1 1/2	1	3/4	1/2	3/8	3-m.	4	6	8	10	14	20	28	35	48	65	100	150	200	<last
1	N. J. Zinc Co.	F	.....	.....	.....	.....	.....	.....	.....	.....	.....	.....	0.1	6.1	35.4	35.9	19.1	2.6	0.4	0.1	0.0	0.1	0.0	0.1	0.1
		P	.....	.....	.....	.....	.....	.....	.....	.....	.....	.....	.....	1.2	15.4	35.5	30.5	8.5	3.7	1.6	1.1	0.8	0.4	0.4	0.9
2	do.	F	.....	.....	.....	.....	.....	.....	.....	.....	.....	.....	0.5	11.7	21.6	15.1	19.0	15.8	10.2	3.0	1.3	0.6	0.4	0.3	0.5
		P	.....	.....	.....	.....	.....	.....	.....	.....	.....	.....	.....	1.3	5.3	14.1	25.5	16.4	12.4	6.8	5.1	3.9	2.7	2.1	4.4
3	Bunker Hill & Sullivan	F	.....	.....	.....	.....	.....	25.3	37.9	28.4	5.8	.....	1.8	.....	.....	.....	.....	.....	.....	.....	.....	.....	.....	.....	0.8
		P	.....	.....	.....	.....	.....	.....	.....	41.7	21.3	.....	21.1	.....	5.2	.....	2.7	.....	.....	2.7	0.8	1.5	.....	.....	3.9
4	do.	F	.....	.....	.....	.....	.....	.....	0	30.2	43.2	.....	25.2	.....	.....	.....	.....	.....	.....	.....	.....	.....	.....	.....	1.4
		P	.....	.....	.....	.....	.....	.....	.....	8.5	9.2	.....	47.6	.....	14.6	.....	6.2	.....	.....	5.1	1.8	2.1	.....	.....	4.9
5	St. Joseph Lead Co., Leadwood	F	.....	.....	.....	.....	2.1	5.8	9.0	9.7	12.6	12.3	9.3	11.6	9.1	4.8	2.3	1.1	0.8	0.7	0.7	0.5	0.6	0.4	6.6
		P	.....	.....	.....	.....	.....	0.3	0.4	5.6	9.4	11.0	8.1	11.8	10.4	7.7	5.6	4.1	2.8	2.6	2.2	2.0	1.9	1.3	12.8
6	St. Joseph Lead Co., Desloge	F	.....	.....	.....	.....	.....	2.3	4.0	14.4	8.0	14.2	14.0	15.6	9.6	3.8	2.7	1.7	1.3	0.9	0.7	0.7	1.1	2.3	2.7
		P	.....	.....	.....	.....	.....	.....	0.3	5.2	5.3	11.0	11.3	13.5	11.4	7.6	6.3	4.5	4.2	2.7	2.8	2.8	2.0	6.1	3.0
7	N. J. Zinc Co.	F	.....	.....	.....	.....	.....	.....	.....	3.7	26.2	56.8	11.2	0.9	0.1	0.1	0	0.1	0	0	0.1	0.1	0	0.1	0.6
		P	.....	.....	.....	.....	.....	.....	.....	0.6	4.4	15.5	18.4	15.5	15.1	8.4	5.5	3.2	3.0	2.2	1.6	1.6	1.0	1.0	3.0
8	do.	F	.....	.....	.....	.....	.....	8.0	20.5	37.6	29.5	3.7	0	0	0.1	0.1	0	0	0	0	0	0.1	0	0	0.4
		P	.....	.....	.....	.....	.....	0.7	5.2	25.3	37.7	18.7	4.4	1.9	1.4	0.9	0.8	0.4	0.4	0.3	0.2	0.3	0.2	0.3	0.9
9	Calumet & Hecla	F	.....	.....	.....	.....	.....	0	.....	.....	.....	100	.....	.....	.....	.....	.....	.....	.....	.....	.....	.....	.....	.....	.....
		P	.....	.....	.....	.....	.....	.....	.....	.....	.....	.....	.....	.....	55.1	.....	24.9	.....	9.6	.....	0.6	0.3	.....	.....	9.5
10	N. J. Zinc Co.	F	.....	.....	.....	.....	.....	.....	.....	.....	0.3	16.4	56.6	19.1	2.8	1.1	0.8	0.5	0.5	0.3	0.2	0.2	0.1	0.1	1.0
		P	.....	.....	.....	.....	.....	.....	.....	.....	0.5	3.4	6.7	5.8	9.5	8.9	11.4	9.2	8.7	5.6	4.5	5.1	3.8	3.9	13.0
11	do.	F	.....	.....	.....	.....	49.0	29.8	17.0	2.0	0.8	0.2	0.1	0.1	0	0	0	0	0	0	0.1	0.1	0.1	0.1	0.6
		P	.....	.....	.....	.....	9.6	37.9	29.8	11.4	3.3	1.8	0.9	0.8	0.7	0.5	0.4	0.3	0.3	0.1	0.2	0.2	0.2	0.2	1.3
12	do.	F	.....	.....	.....	.....	.....	.....	.....	.....	.....	0.6	22.3	62.4	11.7	0.6	0.3	0.2	0.2	0.1	0.1	0.2	0.2	0.2	0.9
		P	.....	.....	.....	.....	.....	.....	.....	.....	.....	0.5	2.8	10.8	18.9	20.5	15.4	8.2	5.5	2.8	2.4	2.3	1.6	1.6	6.7
13	do.	F	.....	.....	.....	.....	.....	0	1.6	6.4	9.0	18.3	27.0	22.4	7.6	1.7	0.8	0.4	0.3	0.3	0.4	0.3	0.3	0.4	2.8
		P	.....	.....	.....	.....	.....	.....	.....	0	11.7	21.6	23.0	19.2	9.0	3.8	2.4	1.5	1.3	0.9	0.9	0.7	0.5	0.5	3.0
14	do.	F	.....	.....	30.7	28.5	9.9	8.2	3.0	2.2	1.6	1.3	1.2	1.2	1.8	1.7	1.6	1.1	1.2	1.0	1.2	0.7	0.5	0.4	1.0
		P	.....	.....	0	24.1	13.9	13.5	7.7	5.2	3.7	2.6	3.3	2.3	3.1	3.1	3.2	2.4	2.6	2.3	2.5	1.4	0.9	0.6	2.6
15	do.	F	.....	.....	4.9	19.9	23.5	17.7	10.1	4.6	1.8	1.8	1.4	1.3	1.7	1.7	1.7	1.2	1.1	0.9	1.1	0.7	0.5	0.5	1.9
		P	.....	.....	0	1.0	3.4	9.6	8.5	7.2	4.5	4.0	3.6	3.7	5.6	7.4	8.5	6.7	6.8	5.0	4.7	2.6	1.7	1.3	4.2

16	do.	F	.....	.....	0	10.8	24.6	34.8	15.9	7.0	2.7	0.6	0.2	0.1	0.2	0.2	0.1	0.2	0.2	0.2	0.3	0.3	0.3	1.0
		P	.....	.....	.....	.....	0	8.4	35.3	25.0	5.7	4.9	3.4	2.4	2.4	2.2	2.0	1.4	1.3	0.9	1.0	0.8	0.5	0.6	1.8
17	Nevada Cons., Chino	F	.....	.....	.....	.....	.....	.....	.....	50.0	.....	.....	34.0	.....	.....	3.9	.....	4.2	3.0	0.9	0.8	0.8	0.6	0.3	1.5
		P	.....	.....	.....	.....	.....	.....	.....	.....	.....	.....	52.7	.....	13.9	10.7	5.6	3.3	2.3	1.6	1.5	1.4	1.3	0.8	4.9
18	Utah Copper, Magna	F	.....	.....	.....	.....	1.6	13.2	18.3	15.6	11.1	7.8	6.2	4.0	2.8	2.6	1.8	1.4	1.3	1.2	1.2	1.2	1.2	1.1	6.4
		P	.....	.....	.....	.....	.....	.....	.....	.....	.....	.....	.....	.....	1.2	9.2	11.5	9.9	8.3	7.1	6.6	5.5	5.3	4.7	30.7
19	Utah Copper, Arthur	F	.....	.....	.....	.....	.....	.....	.....	.....	.....	.....	.....	70.6	.....	.....	.....	.....	.....	.....	.....	.....	.....	.....	.....	29.4
		P	.....	.....	.....	.....	.....	.....	.....	.....	.....	.....	.....	0.2	4.6	6.8	7.2	8.0	7.8	6.1	6.7	5.3	5.6	5.4	36.3
20	Britannia M. & S. Co.	F	.....	.....	.....	.....	2.5	.....	.....	13.2	.....	54.6	.....	.....	.....	.....	.....	.....	.....	.....	.....	.....	.....	.....	29.7
		P	.....	.....	.....	.....	.....	.....	.....	4.7	.....	54.9	.....	.....	25.7	.....	.....	.....	7.6	.....	1.5	.....	.....	2.5	3.1
21	Butte & Superior	F	.....	.....	.....	.....	.....	.....	.....	.....	.....	.....	.....	.....	80.1	.....	7.3	1.5	.....	4.7	1.9	0.6	1.1	0.6	2.2
		P	.....	.....	.....	.....	.....	.....	.....	.....	.....	.....	.....	.....	2.2	.....	25.6	12.6	.....	18.8	6.1	4.5	4.9	8.4	16.9
22	American Zinc Co.	F	.....	.....	18.5	16.8	12.2	.....	21.2	.....	.....	.....	.....	.....	.....	.....	.....	.....	.....	.....	.....	.....	.....	.....	31.3
		P	.....	.....	.....	.....	.....	.....	0.2	7.2	28.7	.....	28.3	.....	13.4	.....	6.6	.....	4.4	.....	3.2	.....	2.7	1.0	4.3
23	Alaska-Gastineau	F	.....	.....	.....	.....	.....	.....	.....	65.2	.....	.....	.....	14.8	.....	.....	.....	.....	.....	11.3	.....	.....	.....	4.3	4.4
		P	.....	.....	.....	.....	.....	.....	.....	.....	.....	.....	.....	.....	7.1	.....	.....	42.6	.....	10.4	.....	11.2	.....	7.0	21.7
24	St. Joseph Lead Co., Bonne Terre	F	.....	.....	.....	.....	1.0	7.0	6.3	8.0	14.0	18.5	13.0	18.5	4.7	1.7	0.7	0.5	0.4	0.2	0.2	.....	.....	.....	5.3
		P	.....	.....	.....	.....	.....	.....	0.5	3.4	10.2	16.4	13.1	20.5	9.3	5.4	3.2	2.8	2.0	1.3	0.9	.....	.....	.....	11.0
25	St. Joseph Lead Co., Balmat	F	.....	.....	.....	0	12.0	19.2	22.3	39.2	2.6	0.4	.....	.....	.....	.....	.....	.....	.....	.....	.....	.....	.....	.....	4.3
		P	.....	.....	.....	.....	0	2.0	11.4	45.6	11.4	8.1	4.5	2.4	.....	.....	.....	.....	.....	.....	.....	.....	.....	.....	14.6
26	McIntyre Porcupine	F	16.0	35.4	18.7	6.5	5.5	4.7	3.6	.....	3.4	.....	.....	.....	.....	.....	.....	.....	.....	.....	.....	.....	.....	.....	6.2
		P	.....	.....	2.2	7.2	28.7	15.4	14.7	.....	30.8	.....	.....	.....	.....	.....	.....	.....	.....	.....	.....	.....	.....	.....	1.0
27	St. Joseph Lead Co., Desloge	F	.....	.....	.....	.....	13.0	19.3	23.1	16.1	.....	14.4	3.2	3.0	2.0	1.0	0.7	0.4	0.3	0.2	0.2	0.3	0.4	0.7	1.7
		P	.....	.....	.....	.....	.....	17.5	22.2	19.2	.....	17.8	4.3	3.8	2.8	1.9	1.5	1.1	1.0	0.8	0.7	0.8	0.9	1.3	2.4
28	do.	F	.....	.....	.....	.....	.....	0.7	2.5	7.7	.....	27.5	12.6	14.4	11.9	6.3	3.7	2.2	1.6	1.1	0.8	0.8	0.9	1.4	3.9
		P	.....	.....	.....	.....	.....	.....	1.1	6.8	.....	20.4	9.0	11.3	10.6	8.3	5.9	4.2	3.7	2.6	2.0	2.2	2.1	2.5	7.3
29	Nevada Cons., Chino	F	.....	.....	.....	.....	.....	.....	.....	.....	.....	.....	.....	.....	.....	.....	.....	.....	.....	.....	.....	.....	.....	.....	.....
		P	.....	.....	.....	.....	.....	.....	.....	.....	.....	.....	.....	.....	.....	.....	.....	.....	.....	.....	.....	.....	.....	.....	.....
30	Alaska-Gastineau	F	.....	.....	.....	18.6	.....	.....	.....	75.8	.....	2.8	.....	0.9	0.2	.....	.....	.....	.....	.....	.....	.....	.....	.....	1.7
		P	.....	.....	.....	.....	.....	.....	.....	85.6	.....	5.0	.....	3.1	0.9	.....	.....	.....	.....	.....	.....	.....	.....	.....	5.4
31	Cons. M. & S. Co.	F	.....	.....	.....	.....	0	7.0	.....	.....	.....	76.0	.....	.....	.....	.....	.....	.....	.....	.....	.....	.....	.....	.....	17.0
		P	.....	.....	.....	.....	.....	0	3.0	.....	.....	.....	.....	.....	77.0	.....	.....	.....	.....	.....	.....	.....	.....	.....	20.0
32	McIntyre Porcupine	F	.....	.....	.....	.....	1.3	6.8	10.4	13.5	16.1	31.0	16.6	2.1	0.5	0.2	0.1	.....	.....	.....	.....	.....	.....	0.5	0.9
		P	.....	.....	.....	.....	0.3	1.9	2.9	5.1	11.9	29.0	20.7	6.2	5.6	2.7	2.5	2.2	1.7	1.3	0.9	0.9	0.7	0.4	3.1

The striking thing to be learned from Table 24 is that except in fine-crushing service, operating with choke-feed and high circulating load, the size reduction effected by rolls is ridiculously small. They do, however, effect cracking to two-thirds to half-size with the production of a very small amount of fines (see Table 24*a*).

Speed of rolls is limited by the ability to nip and by the weight and ruggedness of the rolls. Hence the allowable speed is affected by the diameter of rolls, the kind of ore, method of feed, reduction ratio, and size of feed. Speed should be lower for hard, tough rock than for soft and brittle rock, less for dry feed than for wet feed, less for coarse feed than for fine, and less for a large reduction ratio than for a small, nip being the controlling factor in each case. The speeds reported range from 440 f.p.m. for rolls 30-in. diameter, to 3,220 f.p.m. for rolls 78-in. diameter. Practice tends to keep below 1,000 f.p.m. with rolls up to 36-in. diameter, below 1,500 f.p.m. for rolls up to 60-in. and not to exceed 2,500 f.p.m. with larger machines, more or less independently of other factors, since higher speeds are dangerous to springs, shafts, frames, and foundations. On the other hand, the MIAMI operation at upward of 3,200 f.p.m. with a 78-in. roll is reported (*PC*) to be quieter than at lower speeds. With choke feeding, rolls of large diameters, flywheel pulleys, and general extra heavy construction, some authorities recommend speeds up to 2,000 f.p.m. for 36-in. diameter, 2,400 f.p.m. for 48-in., and 3,000 upward for 60- to 90-in.

At MIAMI COPPER CO. 55-in. rolls taking <3.5-in. feed were run at 100 r.p.m. and the same size roll taking <2-in. feed run at 115 r.p.m. At ENGELS (*123 P 183*), crushing to 1-in. in 54×24-in. rolls, capacity was increased and power decreased 40% by a decrease in speed from 110 to 54 r.p.m. because of improvement in nip. At CONSOLIDATED M. & S. CO. (*61 CMJ 496*), increase in peripheral speed of 74-in. rolls, from 1,000 to 1,330 f.p.m. permitted closing circuit and return of 150% circulating load without reduction in tonnage; operation was quieter than in open circuit and product finer.

Cornish rolls, gear-driven at 50 to 100 f.p.m. peripheral speeds, are occasionally met. The allowable nip angle is much greater at these low speeds and the product is likely to contain more fines than the product of high-speed rolls because of the tendency toward choke-feeding and restriction of discharge.

Capacity of rolls. The theoretical capacity in tons per hr. is given by the equation

$$C = NDWs\delta/293 \qquad (14)$$

where N = r.p.m.; D = diameter of rolls, W = width of face, and s = set, all in inches; and δ = the specific gravity of the rock being crushed. The development of this equation is based on the assumption of a solid ribbon of crushed material with length equal to 60 times the distance traveled by a point on the roll face in one minute, width equal to the width of the roll faces, and thickness equal to the set of the rolls. With open setting and free-crushing the actual capacity never reaches the weight of the THEORETICAL RIBBON. The theoretical ribbon is more nearly approached the smaller the set.

Ribbon factor (r) is the ratio of actual tonnage passing through rolls to the tonnage of the theoretical solid-rock ribbon. Its value in percentage is given by the formula

$$r = 2900T_T/Psw \qquad (15)$$

in which T_T is the hourly total of new and circulating feed tonnage, P is peripheral speed in f.p.m., s = set in inches, and w = width of roll face in inches.

The ribbon factor varies according to the set of the rolls and the degree of loading. Ranges and average figures from practice (Table 24) are as follows: 1 1/2-in. set, 1.4 to 4.8, aver. 2.6; 5/8- to 7/8-in. set, 2.4 to 30, aver. 10; 3/8- to 1/2-in. set, 2 to 37, aver. 18; 3/16- to 5/16-in. set, range 6 to 146, aver. 31; 1/10- to 1/8-in. set, 55 to 469, aver. 155; 1/16-in. set, 32 to 470, aver. 148; 1/40-in. set, 51 to 325, aver. 148. The high end of the range for all sets finer than 3/8-in. corresponds to choke-crushing with large circulating loads returned by a circuit-closing screen.

When rolls are set CLOSE, *i.e.*, face to face, the only way that material can pass through is for it to force them apart. Observation shows that this spreading is intermittent, so that a longitudinal section of the ribbon is a succession of lenses (Fig. 48, item *a*), which are more closely spaced the more heavily the rolls are fed. The maximum spread must equal at least the thickness of the thickest (usually the largest) particle in the product. If the linear sections of the stream, *i.e.*, the spacings between lenses, are assumed to be reduced to a series of points (Fig. 48, item *b*), and these are considered as a series of apex-connected rhombs (Fig. 48, item *c*), the equivalent ribbon of uniform section would be one having a thickness equal to one-half the maximum roll spread. Assuming a shape factor of 1.7, the minimum mean roll spacing or apparent set is 0.3 times the aperture of the circuit-closing screen.

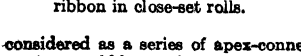

FIG. 48. Longitudinal section of ribbon in close-set rolls.

Reduction capacity for rolls differs greatly according to size and to method of feeding. Table 24 indicates that in free-crushing, with a reduction ratio (R_{80}) between 1.5 and 2, the average capacity of 30-in. rolls is about 15 reduction t.p.h.; for 36-in. rolls, 20 reduction

tons; for diameters in the 40's, 45 reduction tons; in the 50's and 60's, 150; and in the 70's, 450. In choke-crushing, with reduction ratios averaging 5.0, the corresponding capacities are: 30's, 30 reduction tons; 36's, 150; 40's to 60's, 250 to 300; 70's, 1,200 to 1,500. It should be noted further that the large heavy-duty rolls may be and are frequently operated at reduction ratios up to 20 or 25, with choke-feeding and heavy circulating loads, and that under these circumstances the capacities in reduction tons of the rolls in the 40 to 60-in. range increase above the averages given above in proportion to the increase in reduction ratio. Whether the reduction capacity of the 72- and 78-in. sizes can be similarly increased is not certain on the basis of the data available, but it is probable.

Motors recommended by roll manufacturers are almost invariably oversize; the roll is thus overpowered in order to provide for overcoming incipient chokes for whatever cause, and to facilitate cold starting. Motors should, therefore, be of types which show high efficiencies at underloads (see Sec. 20, Art. 7).

Efficiencies of rolls, expressed as reduction tons per hp-hr., are dependent primarily on whether the operation is free- or choke-crushing; size of machine has an effect, and it is probable that character of rock is also a factor, but if so, it is not a large one. Efficiencies in free crushing average from 0.5 to 1.1 or 1.2 reduction tons per hp-hr. for smaller rolls and up to 2.2 in the larger machines; in choke crushing the average is from 6 to 7, with some extra heavy duty figures running up to 10 or 12. Efficiency increases with weight of the revolving parts, and with speed up to the point of nip failure, owing to the magnitude of the resulting inertia effects and the consequent leveling off of peaks in the power draft.

Feeding. Rolls must be fed at a constant rate and with the stream distributed over the full width of face in order to get maximum capacity and efficiency. If the feed stream is not distributed over the full face, circumferential grooving occurs under the feed point and the amount of crushing done at one pass decreases rapidly. If the feed is not constant in quantity but comes in surges or rushes, the rolls are liable to choke and stall or, if the driving equipment is sufficiently heavy to prevent this, they spring apart and pass a mass of material only partially crushed. This causes chattering and excessive wear on slides and babbitt; it produces a greater tonnage of circulating feed, if the rolls are run in closed circuit with a screen; and makes it impossible to reach maximum capacity. Present best practice is to use surge bins of 15-min. to several hours' storage capacity, delivering through constant-rate feeders.

At INTERNATIONAL NICKEL CO., feed rate is manually controlled by the operator, who varies the speed of a pulley feeder so as to feed to the full limit of motor capacity; if the hardness of the ore varies, feed must be varied accordingly.

Transfer from feeder discharge into the roll housing is made by a spout. This spout should be flat-bottomed, transversely level, of the same width as the roll face, so placed that the transverse level line is parallel to the axes of the roll shafts, terminated so that the trajectory of the falling material is into the bottom of the vee between the rolls, and that the speed of the stream making contact with the roll faces is substantially that of the faces themselves. The aim is to bring a roughly rectangular stream of material into the crushing zone at such a speed that slipping between particles and roll faces is minimized. If the feed spout, properly made and set, will not deliver such a stream, rods or other distributing devices, placed to suit the problem, should be installed. If the cheek plates are moved back sufficiently to permit a small amount of spill at the edges of the rolls, edge flanging is diminished materially and operation is more efficient despite some tramp oversize in the product. If the feed contains a large percentage of clayey material, rolls are liable to choke.

Rolls may be FREE-FED or CHOKE-FED, the former phrase indicating freedom of movement between particles resting in the vee of the rolls prior to nipping, the latter that the particles at this point are piled up to such a depth that no free movement exists. In free-feeding, each particle is broken substantially individually and crushing is practically uniform and continuous; in choke-feeding, masses of material are rolled through intermittently, the roll faces springing apart to permit their passage. In this compression of the mass of rock there is much abrasion between particles which results in a less granular product than that from free-crushing. Except in the case of the largest rolls, choke-feeding can be practiced only with material already crushed to 1/4-in. or less.

Rolls are ordinarily run dry. Wet feed aids nipping and prevents dusting, but increases maintenance costs.

Open-circuit feed. It was found at CONSOLIDATED M. & S. Co. (*61 CMJ 495*) that retention of a certain amount of fines in the scalped feed to open-circuit rolls made for quieter operation (less jumping) and correspondingly less oversize in product. On the other hand, when crowding the rolls, too much fine material in feed exceeded their capacity and stalling occurred. Crowning the feed chute, thus tending to equalize distribution of feed, tended to reduce corrugation.

Closed circuit means that the product of a crusher or grinding machine is sent to a sizing device which permits undersize only to discharge from the circuit and returns oversize for further crushing. As a result of such practice a circulating load, comprising such returned material, builds up gradually until it reaches a constant tonnage, assuming constancy of operation. Circulating load is ordinarily expressed as a percentage of the new feed and normally ranges in roll circuits from 75 to 400%; it is smaller in coarse crushing than in fine, small when the ratio of aperture of closing screen to roll set is relatively large (upward of 4 : 1), small when screening is efficient; it increases with moisture content through the range where this tends to cause screen blinding; it is high with worn roll shells and with light spring pressures, low with light loads.

Extensive work at CONSOLIDATED M. & S. Co. (*61 CMJ 497*), directed toward increase in capacity, showed that higher capacity, smoother operation, and a finer product were obtainable in closed than in open circuit.

Tonnage in a circulating load may be estimated from preliminary crushing experiments in which oversize from original crushing (in the type of machine to be used and at the setting to be employed) is recrushed, and its oversize similarly recrushed, with intervening sampling and sizing on a test screen of the aperture of the closing screen. Such a test, involving not more than two or three recrushings, should reach a constant ratio of return b. If crushing is to be free, it is unnecessary to feed back returns with more new feed, but if choke-crushing is to be employed, the feed rate to the rolls must be kept up to choke conditions with an estimated proportion of new feed present, and the determination of b will involve considerable ingenuity and guesswork. With b established, total tonnage in the circuit (T_T) may be calculated from the tonnage of original oversize (T) by Eq. 16.

$$T_T = T/1 - b \tag{16}$$

and circulating tonnage (T_c) = $T_T - T$.

Size of product. The lower limit of size for efficient roll crushing is not clearly established, but certainly it is not below 10-m. Where a product passing a 10-m. screen is all that is desired, it is usual and probably more economical to complete the crushing in rolls than to install rod or ball mills, but at RAY and at TENNESSEE COPPER Co. large fast-running rod mills have proved cheaper than rolls for comminution through the range from 1-in. to 10-m. limiting size, the saving being primarily in the steel consumed, and amounting to 2 to 3¢ per ton. Following these showings, several rod-mill installations have been made in plants producing sand for concrete. When the product wanted is finer than 10-m., and no metallurgical considerations enter, ball or rod mills are invariably used for final comminution, and the question then arises as to how far crushing should be carried, since rod and ball mills can operate on 3-in. feeds. The weight of present (1943) practice is to send feed to the ball mills at limiting sizes between 1/2-in. and 3/4-in., in which case rolls are not used; the copper mills are the striking exception to this practice, since they crush to 10-m. for ball-mill feed, and, with few exceptions, do so in rolls. The gravity-concentration mills likewise use rolls down to 10-m., and occasionally somewhat finer, but 20-m. crushing in rolls is much more expensive than ball milling.

Graded crushing is an operation of gradual reduction in size by means of a series of crushers, each set with a smaller discharge aperture than the preceding, while material fine enough to pass the following crusher is removed between the crushing steps. The purpose is to minimize production of slimes. Size reduction in successive steps in graded crushing is usually small; working reduction ratios are of the order of 1.5 or 2.5. The alternative extreme is to break down with as big steps in reduction ratio as the size and strength of the crushing machines will permit, with no removal of fines ahead of successive crushers, except that the last crusher in series is in closed circuit with a limiting screen.

During the years before the introduction of flotation processes in base-metal milling, when minimum sliming was essential to maximum recovery, the tradition that graded crushing was necessary was established, apparently with very little experimental evidence. An exhaustive investigation by the NEW JERSEY ZINC Co., crushing a sphalerite ore with granitic gangue from 1-in. to 0.1-in. maximum size in rolls, showed that the amount of <0.025-in. material produced was the same, within a range of about 2% of the weight crushed, irrespective of the number of steps or the presence or absence of intermediate screening. Small-scale intermittent tests at COLUMBIA UNIVERSITY gave similar results. Further tests in the Columbia laboratory have shown that the sizing test of the product of a pair of rolls with a given set is substantially the same with a given rock, irrespective of the size of feed, provided only that the rolls are free-crushing, that they will nip the particles, and that there is no undersize present in the feed. The significance of the last restriction lies in the fact that if the various feeds contain different amounts of undersize these will have different effects on the screen tests of the products, even though they pass through without any breaking. These facts would seem to establish definitely that there is no advantage from graded crushing and intermediate screening in free-crushing in rolls.

Corrugated rolls differ from the plane rolls already described in that the shells are corrugated transversely. Corrugated shells are used in a few metal mills, usually where the feed is too large to be nipped by rolls with plane shells.

At Hollinger (*Bul 117 CMI 343*) a set of 40×20-in. transversely corrugated rolls set at 0.75-in., running at 110 r.p.m. and drawing 45 hp., took the product from three gyratories, one set at 1.5-in. and the others at 2.5-in., at the rate of 125 t.p.h. Finger gears were used on these rolls to keep the corrugations in mesh. The driving motor had a double-throw switch to allow reversal in case of clogging. The shells were manganese steel, 4 in. thick. One set weighed 4,730 lb. and crushed 200,000 tons, so that steel consumption was 0.024 lb. per ton crushed.

Character of roll product varies according to the character of feed, the type and setting of the rolls, whether crushing is free or choke, and whether operating in closed- or open-circuit. Fig. 49 gives characteristic sizing curves of smooth-faced spring-roll products from average rock.

Curve *O*, for free-crushing in open circuit is, barring the small dip in the fine sizes, substantially a straight line, and justifies the common assumption of a straight-line relationship between cumulative weight retained and size in the product of such crushing of sized feeds. Curve *CF* is characteristic of free-crushing in closed circuit. Circulating load is usually light. When this curve is corrected for a small amount, usually less than 5%, of material retained on the coarsest screen (see curve CF_s), the average is very close to the direct-proportion straight line; the dip at the coarse end being caused by the repassage, substantially uncrushed, of the finer part of the circulating load, and the hump at the fine end being due to the effect on percentages of this uncrushed circulated material, from which the proper proportion of fines is not made. The curve would seem to justify closed-circuiting in free-crushing when the desideratum is the production of a maximum of granular product with a minimum of slime. Curve *CC* is characteristic of choke-crushing in closed circuit with heavy (>300%) circulating loads; the concavity of the curve is a reflection of both interparticle grinding (fine end) and inability of the machine to hold back flats (coarse end). Curve *S*, characteristic of the closing-screen undersize in a circuit with rolls producing material of the character *CC*, is simply a reflection of *CC* with the coarse end removed and the concavity-producing effect of the fines intensified. It is apparent that when the limiting screen is of small aperture, *e.g.*, 10-m., a considerable burden is taken from the subsequent grinding mill; it is further apparent that this is not the way to crush when minimum slime production is the aim.

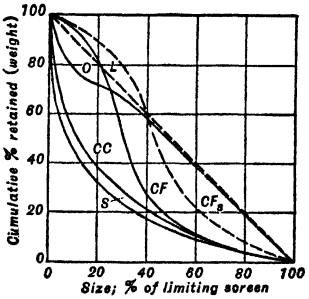

O = Open circuit, free-crushing.
CF = Closed circuit, free-crushing.
CF_s = Curve *CF* shifted (see text, this page).
CC = Closed circuit, choke-crushing.
S = Closing-screen undersize, closed circuit choke-crushing.
L = Ideal product curve.

Fig. 49. Characteristic sizing curves of roll products.

In the open-circuit work recorded in Table 24, while the data are meager, it is indicated that with rigid rolls, or spring rolls run at high pressures, doing coarse crushing and not heavily loaded, the limiting size of nonslabby material is about twice the set, as is to be expected from the shape factor; the percentage coarser than the setting is 20 and that finer than half the setting is 60. With coarse feed, relatively coarse settings, average loading, and the comparatively light spring tensions normally used in free-crushing work, the limiting size is about 4 times the setting, ranging from 2.5 with a 1-in. set to 5.3 with a 3/16-in. set; percentage coarser than the set is 45 and that finer than half-set is 25. This may be taken as the average condition. (When tramp oversize is eliminated from this material its sizing curve approximates *O*, Fig. 49). One machine set at 1/16-in. and taking >1/2-in. feed at an average rate had some >3/8-in. material in the product, showing a limiting size 8 times the set, 80% coarser than the setting and only 15% finer than half-set. This indicates either very low spring tension or badly corrugated shells.

In closed-circuit operation, free-crushing, the product of the rolls (not the closing-screen undersize) is not greatly different in character from that of open-circuit work except that the ratio of limiting size to set is a little higher and the proportion coarser than set is, perhaps, slightly greater. When choke-crushing, with high circulating loads (>200%) and feeds coarser than 1/4-in., the average ratio of limiting size to set is 3 or 4, the percentage coarser than set is 20 to 40, averaging close to 30, and the percentage finer than half-set ranges from 30 to 60, averaging between 40 and 50. (It should be noted that the set in such crushing is not the nominal set but approximately 0.3 times the limiting size of product (see p. 72); if nominal settings are used in the analysis, the percentages quoted are almost random scattered.)

The undersize of the closing screen in heavy-duty closed-circuit choke-crushing, where the closing screen is smaller than true set, has a limiting size: set ratio normally less than 1.0; the percentage coarser than set is, therefore, zero; and the percentage finer than half-set is substantially 80.

Making a closely sized product. In many industrial-mineral plants (*e.g.*, chip roofing, chick grits, abrasive, etc.) the desideratum is to produce a maximum percentage of some particular granular size. Owens (*42 IMM 407*) points out that while the quantity of fines produced by free-crushing in rolls will increase steadily from zero at a roll set larger than the largest feed particle, and approach 100% at zero set, and the quantity of particles near the coarsest present in the feed will, conversely, increase from zero at zero set to 100% at a set larger than the largest feed particle, the amount of any other size produced will pass through zero at both of these limiting settings and will, consequently, pass through a maximum at some intermediate setting. By running a series of tests, therefore, at a number of settings, varying capacity correspondingly to maintain the maximum, and plotting quantities of the desired granular product against the set, the set required for maximum production of the desired size may be determined.

Operation. The essence of successful roll operation is frequent inspection and immediate attention. Shafts should be kept in alignment and springs kept up to tension; set should be maintained, and unequal wear of shell faces and flanging of the edges should be prevented or minimized; all bolts should be kept tight and shims maintained in place to prevent slapping together of roll faces. Failure to attend to these things will invariably increase lost time and maintenance charges. Bearings should be rebabbitted immediately, if uneven wear destroys alignment. Springs should be kept at such a tension that there is no visible compression when only rock is going through; tension in the two cages must be equal (spacing of cage heads the same) to prevent lack of alignment; tension on all individual springs in a cage should be the same (distance between heads at four corners equal); and in setting, the spring-cage tension must be taken up on the main tension rods, or the cage bolts will be broken. Chatter and vibration usually indicate low spring pressures. Cores should be set up as tightly as possible when new shells are set; core bolts should be tested (and tightened) within 24 hr. after a new shell is put into service, and should be inspected at two-week intervals at the most thereafter. Frequent lateral shifting will prevent edge flanging and minimize corrugation, and, coupled with changes in the feed stream, will go far toward preventing the latter. Loose foundation bolts induce vibration and any such movement in such heavy machines is highly destructive. Failure to maintain set increases circulating load with corresponding increase in wear and transport charges; and if any unit in the flow is normally working to capacity, new-feed tonnage must be reduced correspondingly.

Cost of roll crushing. The elements of cost are power, labor, repairs, and lubrication. One man can attend 3 to 12 sets of rolls; the average in 20 plants investigated, where the roll tender had no other duties, was 6. Repairs may be estimated at about twice the cost of roll shells. Consumption of lubricant ranges from about 2 to 50 lb. per 24 hr. On the basis of these quantities the cost of crushing to $<1/4$-in. should not exceed $0.07 per ton in small rolls (36-in. or less diameter) nor $0.045 in large. Addition of charges for screening and conveying in closed circuit will bring the total up to about twice these figures for best conditions. Coarse crushing will cost considerably less on account of smaller power consumption and labor cost.

Applicability. The competitors of rolls for crushing hard rocks are: the reduction crushers of the gyratory type, at the coarse end; and tumbling mills at the fine end. The hammer mill competes over the entire range for nonabrasive rock. For feeds down to 1-in. and products down to $1/2$-in., limiting, the great majority of users have resolved the competition in favor of the reduction crushers; for products finer than 10-m., limiting, the competition is similarly lost to the tumbling mills; but for the reduction from 1-in. limiting feed to 10-m. limiting product there is no consensus of practice or opinion. The weight of the evidence at present (1943) would seem to be, however, that the short-head cone in closed circuit is generally cheaper with closing screens down to $3/8$- or $5/16$-in. but not finer, provided the ore is not clayey or otherwise sticky. There is considerable evidence that rod mills will take $<3/4$-in. to <1-in. abrasive feed and make <10-m. product more cheaply than rolls, when no closing screen is used with the rod mill and screens are used to close the roll circuit. The advantage of the rod mill is primarily in the simpler circuit, absence of accessory screening and conveying equipment, and lower-priced steel; the price per pound for high-carbon steel rods was (1939) about 3.5 to 4¢ compared with 12 to 30¢ for roll shells. Comparative consumptions are about 0.4 lb. per ton of rods *vs.* 0.03 lb. per ton for high-priced shells and 0.09 lb. for the low-priced shells. Many more mills, however, are using rolls over this range than are using rod mills. More mills crush through the range from $1/2$-in. to 10-m. in ball mills than use rolls to make 10-m. ball-mill feed, but in the low-cost large-tonnage mills the latter practice predominates. On the other hand, in small mills the elimination of one crushing stage and the concomitant installation of a ball mill of larger diameter than would otherwise be justified is almost universal, and the greater efficiency of the large mill would seem to more than counterbalance the lost efficiency involved in crushing the large feed particles therein.

Selection of rolls. The necessary data for setting up the problem are: sizing test of feed, limiting size of product, size distribution desired in product, hourly tonnage, and character of rock. The method of solution is indicated in the following examples.

Example 1. To select a set of rolls to crush 50 t.p.h. of granite from <1-in. standard-cone product to $<1/4$-in. with minimum production of fines. The specification of minimum fines makes free-crushing necessary (Fig. 49). Specification of $R_L = 4$ imposes the necessity for closed circuit, if the reduction is to be done in one stage. Set must be $0.25/1.7 = 0.15$-in. to produce $<1/4$-in. square-mesh granite, taking shape factor = 1.7. Minimum diameter of rolls = $40[(1/1.7) - 0.15] = 18$ in. (for 25° nip angle). Standard cone product contains 40% $<1/4$-in., hence net tonnage of new feed = $(0.6 \times 50)/0.85 = 35.3$ t.p.h. Circulating load must be relatively high to make $R_L = 4$, say 200%, hence total hourly tonnage is $35.3 + 70.6 = 105.9$. Ribbon tonnage = $(100 \times 105.9)/55 = 192$, taking a low ribbon factor to insure free crushing. Place this value for C in Eq. 14, and letting $w = 24$, $\delta = 2.6$,

and $N = 100$, for a trial solution, $D = 60$ in. Hence 60×24-in. rolls at 100 r.p.m. are indicated. A check on this estimate is obtained by comparing the reduction capacity required against average reduction performances of such rolls. From Fig. 42, w_{80F} in the present case is 0.62(1.0) = 0.62-in. From Fig. 49, $w_{80P} = 0.62(0.25) = 0.16$-in. $R_{80} = 4$. $T_R = 4(35.3) = 141.2$. Average T_R for 60-in. rolls from Table 24 is 150. Nip angle will be 14°. Moderately heavy duty rolls will serve, since the operation is free-crushing.

Example 2. To select a set of rolls to crush 50 t.p.h. of granite from <1-in. standard-cone product to <10-m. ball-mill feed. Maximum fines production is desirable; hence choke-crushing with a heavy circulating load is necessary. Table 24, item 33, shows that the reduction can be made in one step, using a 10-m. screen to close the circuit. Set may be close or a small open set; the mean set may be approximated on the score that R_L based on roll feed and unscreened roll product in choke-crushing ranges from 1.4 to 3 (Table 24), being larger the heavier the loading; taking a value of, say, 2.5, the limiting size of product would be 0.40-in., the corresponding thickness = 0.40/1.7 = 0.24, and the mean set one-half of this = 0.12-in. Net tonnage of new feed, from Fig. 42, is approximately 0.9(50)/0.85 = 53 t.p.h. Circulating load must be high to effect heavy choke-feeding, say 450%. Total tonnage = 5.5(53) = 290. Ribbon factor for heavy choke-feeding and small set may be taken as 250, hence theoretical tonnage = (100 × 290)/250 = 116. Substituting this value in Eq. 14, using $w = 24$, $\delta = 2.6$, and $N = 100$ for a trial solution, gives $D = 45$ in. To check this against performances: $w_{80F} = 0.62$ (Fig. 42); $w_{80P} = 0.024$ (Fig. 49); $R_{80} = 26$, and $T_R = 1{,}380$. Performance values of T_R for 45-in. rolls range from 250 to 300 with $R_{80} = 5$ and increase proportionately to increase in R_{80}; taking the 300 and making the adjustment, 26(300)/5 = 1,560. The assumed peripheral speed, (100 × 45 × 3.14)/12 = 1,180 f.p.m., is well within the limits for heavy-duty rolls, hence by speeding up a roll of narrower face somewhat, 43- or 44-in. diameter may be used, but modern practice would tend toward larger diameter and somewhat slower speed for the sake of operating economy and to give reserve capacity.

9. HAMMER MILLS

Use. The HAMMER MILL, or SWING-HAMMER CRUSHER, or PULVERATOR, or IMPACTOR, as it is variously known, is used either as a one-step primary crusher for reducing run-of-quarry material to as small as <1-in. size, or as a secondary crusher taking 4~8-in. primary-crusher product down to <3/4-in. or finer. Its use as a rock crusher is almost wholly confined to the softer, easily crushable materials such as phosphates, gypsum, barite, asbestos rock, cement rock, and the like, medium-hard limestone being the hardest rock commonly crushed; as a secondary it is used for more abrasive material, especially if this is brittle, and scattered instances are reported of its use on siliceous gravels; in general, however, high maintenance is to be expected, if the siliceous content of a feed is in excess of 5%. The mill is particularly useful for clayey material that would clog reciprocating-type primary crushers. It also has wide use in crushing bituminous coal at coke-oven and power plants, and in disintegration, by shredding, of various fibrous organic materials such as plant stems (wood and straws), bones, and hoofs.

Description. The machine, of which a number of different forms are shown in Fig. 50, comprises essentially a plurality of flailing hammers *a* which strike rock particles either when they are falling freely through air or as they rest on a stationary metal surface *g* inclined more or less in the direction of the hammer travel, and the struck particles, or fragments thereof, are thereupon thrown with great force against other fixed surfaces *k* surrounding the flailing hammers, or are pinched at an angle between the moving hammers and fixed surfaces *i*, usually perforate.

Machines of the general hammer-mill type vary widely in details of construction, particularly as regards the conformation and material of the hammers, the placing and conformation of the breaker plates, the presence or absence of and the type of exit grating, and the position of the feed inlet. A typical medium-duty grate-type machine is shown in Fig. 50, item *A*. The hammers *a* are suspended by pins *b* between heavy steel disks *c*, which are spaced along shaft *d* by suitable spacers and keyed thereto. The shaft *d* is carried in heavy bearings in the ends *e* of the main frame. A heavy flywheel is mounted on one end of the shaft; the other end is fitted with a drive pulley or is attached, through flexible coupling, directly to the driving motor. Rotation of the machine illustrated is counterclockwise. The bottom of the feed hopper *f* carries heavy breaker plates, which may be moved forward, to compensate for wear, by suitable adjusting screws. A grid or screen for determining product size is formed by the longitudinal grate bars *i*. The top of the crushing zone is enclosed by an imperforate cover *j*. As the hammers wear beyond the limits of adjustment of the breaker plate *g*, they may be rehung further from the center of rotation, in other holes (*l*). In most forms of the machine the grid frame is also hinged (see Fig. 50, items *E* and *F*) or otherwise arranged for gradual adjustment toward the center of rotation, as well as for dropping away for quick discharge of the load in case of a clog-up or sudden shutdown.

Feed entry is variously arranged. In some machines (Type I) entering coarse material is first struck while partly supported against a stationary plate (Fig. 50, items *A*, *E*, *G*) and the hammers tend to drive broken fragments toward the grid; in others (Type II) entering material is first struck by rising hammers (Fig. 50, items *B*, *D*, *F*) and fragments are thrown against breaking plates along the top and downcoming sides, from which they bounce back into the hammer path for further blows before they

reach the grid; and in yet others (Type III) the first blow is substantially horizontal (Fig. 50, items *C*, *H*, *I*, and, to a certain extent, in *G*), with some opportunity for reflection into the coarse-crushing zone before falling into the fine-crushing zone on the grid. The form *I* has heavy anvil bars carried on adjustable plates, so that the bars may be spaced at the most favorable distance from the hammers. On the grid the crushing action is, in part, simple impact against unbacked-up particles, and in part shear of pieces wedged between or lying upon the bars. Type I machines are medium- to light-duty; Types II and III heavy-duty.

Grid is sometimes omitted (Fig. 50, item *I*), particularly in top-feed machines, in order to save excessive wear with abrasive feeds, or to escape clogging with sticky materials. The rotor is usually

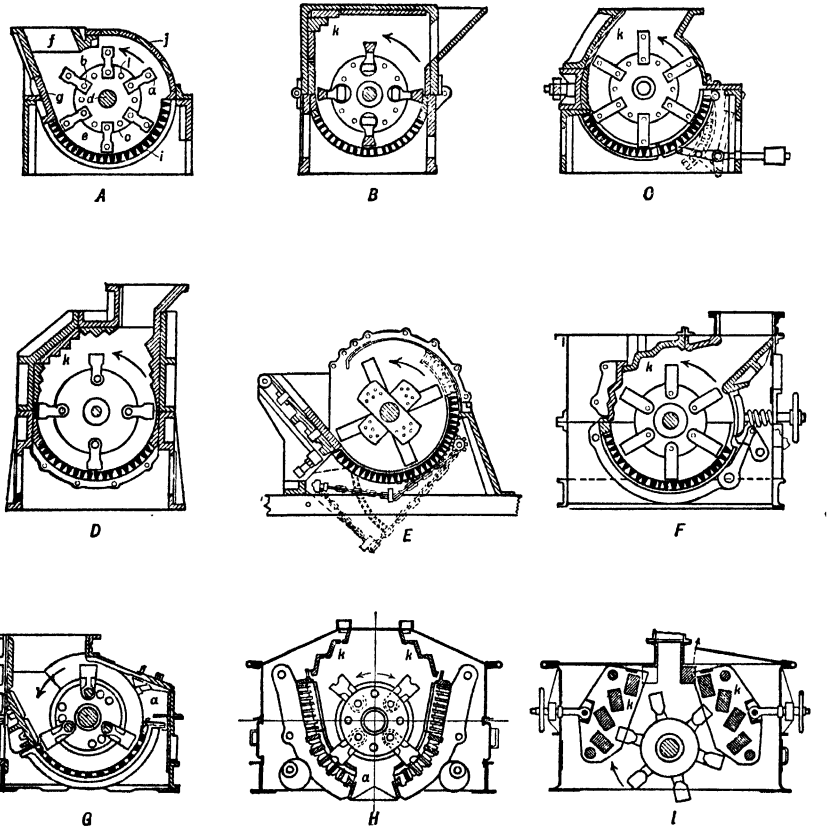

FIG. 50. Hammer mills.

speeded up for such service, but, even so, there is no positive guard against discharge of oversize, and if a definite limiting upper size is important, the machine must be put in closed circuit with a screen. In secondary crushing and in pulverizing service a separate circuit-closing screen should always be used whether the machine contains a grate or not. (See also *Grates*, p. 81.)

Tramp iron in feed is a source of grate-bar and hammer breakage, with possible resultant wreckage of the entire machine. Where possible, it is best removed by a magnet on the feed line. Some forms (Fig. 50, items *G* and *H*) provide a catch pocket *a* into which it is hoped the iron will be somewhat preferentially flung by centrifugal force and held for cleanout.

Main frame in large heavy-duty primary machines is made of deeply ribbed cast-steel sections with the main bearings and the bearings for the swing shaft for breaker plates and grid frame cast integral in a one-piece base. The upper housing is either cast or built up of plate and structural shapes. In either case flanged joints, carefully machined, are provided for bolting the housing to the frame. The hopper is made of rolled steel shapes and plates. In machines for lighter duty only the ends of the base are heavy iron or steel castings, with cast seats for the main bearings; rolled structural shapes and heavy plate are used for the balance of the frame and housing.

Housing should be kept down in size as much as is consistent with sufficient spacing of anvils or breaker plates. These latter are necessarily tough as well as hard; they consequently flow when worn unless properly backed. If the necessary backing is made an integral part of them, the discard is rela-

tively enormous; hence either they must be backed against the housing, or a special backing frame must be provided inside the housing.

The housing should provide ready access for changing hammers; this is especially important with abrasive material, where hammers may require reversal as often as once per 24 hr.

Shaft is made very heavy, of forged high-carbon or alloy steel. In one machine the shaft is 22-in. diameter through the crushing zone and turned down to somewhat smaller diameter at the bearings.

Bearings are of extra heavy ring-oiling dynamo type or, in the best machines, of roller type. Every endeavor should be made to dustproof them efficiently.

Disks (*c*, Fig. 50, item *A*) are made of cast steel, with heavy hubs, bored and keyseated for the main shaft, and carefully bored in register with each other for the hammer-spending pins. They should be made without projections from face or edge essential to their functioning, as these wear excessively and thus shorten life. Designs that can be adapted to either stirrup or slugger hammers are useful.

Hammers are made of chilled iron, forged high-carbon steel, cast manganese steel, or special tough hard alloy steels, and in a variety of shapes according to service (see Fig. 51). They weigh from a few pounds to 250 lb. each.

Forms *A*, *B*, and *C* are BAR TYPE for light duty; *A* and *C* for relatively coarse product, *B* for a finer product produced by more attrition grinding on the grid. Forms *D*, *E*, and *F* are of the so-called SLUGGER TYPE, for heavy duty; in each of these forms some provision is made for saving discard metal.

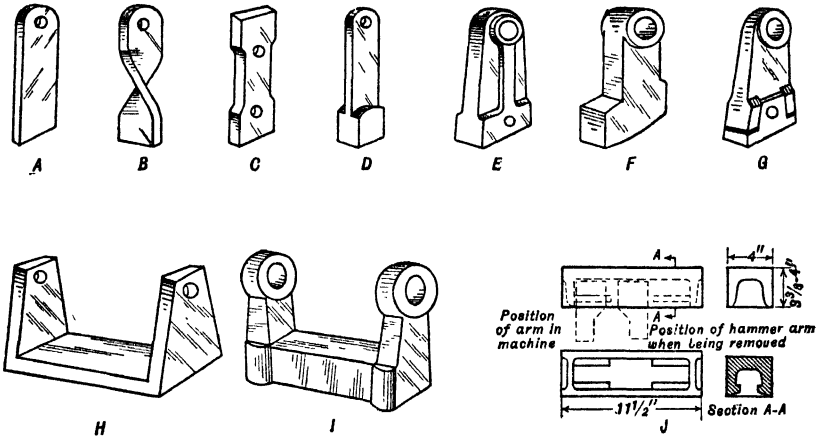

FIG. 51. Types of hammers.

Such forms are usually heat-treated to produce hard heads and tough shanks. Form *E* is cast with a cored-out head to permit compensation for wear by means of additions of lead in the cored cavity, with the idea of thereby decreasing troublesome and possibly destructive vibration due to uneven wear. In some forms, *e.g.*, form *F*, the hole for the rotor pin is cored out for bushings of various eccentricities to permit maintenance of a relatively constant hammer circle, as a remedy to vibration. Form *G* has a replaceable head, designed to be pinned to the shank; this is better than similar forms with riveted heads, but the pins bend in service and are hard to remove; heads held on by lugs are better, if they are so designed as to insure against loss while running. At NORRIS DAM (*129 A 185*) the use of pinned heads on stirrup hammers added 8¢ per head for labor in changing, and the shutdown time was appreciably longer. Forms *H* and *I* are light and heavy STIRRUP TYPES respectively; they strike with greater impact than the slugger types, and are more effective in attrition grinding on the grid, but when they are forced back, more of the effective hammer circle is lost, and with them the rotor gets out of balance more frequently owing to uneven wear. At NORRIS DAM, in secondary service, they made more finished product per hp-hr. and per lb. of hammer than the slugger type. Form *J* is a stirrup hammer with replaceable head, lug type, used at NORRIS DAM. A later form, designed with deeper sides, a bridge at the center, and with the face troughed, gave definitely longer life and lower metal costs per ton; the deeper sides increased the area of striking surface, which reduced both circulating load and wear on hammer arms; the bridge prevented deformation and thus made removal of worn heads a simpler and quicker job. The average new weight of heads was 28.6 lb. and the discard weight, 18 lb. If sides are made too deep for complete penetration (see p. 81), rejection weight increases owing to lack of wear at the inner portion. The trough reduced discard weight without reducing life. This change in design reduced metal cost for manganese-steel hammers from 1.69 to 1.28¢ per ton, and for chrome-steel from 2.46 to 1.78¢. The essence of hammer design is to so apportion the metal that the head will maintain a face as large and as nearly in a radial plane as possible until wear has reached the point that breakage is imminent. With renewable tips, one shank will usually last as long as 3 or 4 tips.

Capacity of open circuits is decreased, and circulating loads in closed circuits tend to increase rapidly after the hammers are about half-worn, but the net reduction per hp-hr. is not greatly affected by hammer wear except near the end, provided penetration is complete. At WISCONSIN STEEL CO., in

crushing bituminous coal with partly worn hammers, capacity was 206 t.p.h. and power draft 345 hp.; 2 months later, after change to new hammers, capacity was 234 t.p.h. and power consumption dropped to 319 hp. At another plant the power consumptions with new and old hammers (140,000 tons for Lucas slugger-type and 1,000 tons per tip for Hiller bar-type) respectively were: Pocahontas, 0.8 and 1.0 hp-hr. per ton; Elkhorn, dry, 1.65 and 2.15; wet, 2.2 and 2.7; Roda (medium hard), 1.3 and 1.8.

Other special-shaped hammers are used for special industrial services.

Reversibility. All forms of hammers are reversible to compensate for rounding with wear. Some machines (Fig. 50, *H*) are built for reversible rotation to equalize wear on hammers and grid bars, and eliminate necessity for reversal thereof. With abrasive material this is important. At NORRIS DAM, with a limestone carrying 3 to 8% uncombined SiO_2, mills had to be stopped for hammer reversal every 17 to 27 hr. and for hammer change half as frequently. Time for hammer reversal is about 45 min.

Rows. Hammers are arranged in 2, 3, 4, and, rarely, 6 rows, the smaller number being used for coarse feed and discharge when the desiderata are heavy blows, quick discharge, and correspondingly high capacity; the greater number for fine pulverization, where the greatest possible number of relatively light blows is desired.

Extensive tests at NORRIS DAM (*129 A 185*) showed that for crushing <3-in. cherty limestone through 1/4-in. 3 rows made more finished product per hp-hr. than either 6 or 2, although as between 3 and 2 the difference was small. Three rows produced more circulating load, with consequent greater metal consumption in the mill and higher screen wear. The essential factor here is penetration of particles into the hammer "cylinder"; if this is too little, owing to lack of time interval between successive hammer rows, the forward outer edge of the hammer rounds off quickly and thereafter material is struck glancing blows, circulating load increases, and new feed must be reduced to prevent clogging. On the other hand, breakage of brittle hammers tends to be less with a greater number of rows.

Table 25. Relative wear of hammers at Norris Dam

Metal	Order *a*	Relative wear *b*	Price, cents per pound delivered
Cr-Mo steel	1	0.64	22.5
High-carbon steel	2	0.74	24.0
Cr steel	3	0.75	21.5
Mn steel, hard-surfaced with Amsco 459 weld rod	4	0.79	38.7
Mn steel, hard-surfaced with Amsco 217 weld rod	5	0.80	37.5
Mn steel, hard-surfaced with Borod weld rod	6	0.80	39.0
Mn steel hard-surfaced with Stellite weld rod	7	0.84	37.0
Mn steel, cold-worked all sides	8	0.89	23.9
Mn steel, hard-surfaced with Studite weld rod	9	0.90	30.0
Mn steel, hard-surfaced with Hascrome weld rod	10	0.92	36.8
Tempered high-carbon steel	11	1.00	22.5
Mn steel, cold-worked two sides	12	1.01	24.2

a Wear resistance decreases as order number increases.
b Compared to No. 12.

Material of hammers has a marked effect on economy of operation if abrasion is high, since hammers cost 10 to 15¢ upward per lb. and the mill must be down 5 to 10% of a 24-hr. operating schedule for hammer changes. Hammer breakage is disastrous for the reason that a broken hammer loose in the mill will usually break others before the mill can be stopped, with resulting havoc not only to grates but also to rotor disks and shaft, bearing caps, and to motors, if these are direct-connected. Table 25 gives relative wear ratings on cherty limestone at NORRIS DAM. The chrome-alloy hammers were highly uneven in quality, some brittle to the point of early breakage, some so soft that wear was double the normal. From the standpoint of operating cost, with labor cost for hammer replacement 0.2¢ per ton of finished product, the No. 12 hammer of the stirrup type was cheapest on this particular operation, with an overall hammer cost of 1.33 to 1.68¢ per ton of product. Comparative costs for bituminous coal are 0.15 to 0.35¢ per ton.

Breaker plates are variously located, shaped, and arranged according to the designer's ideas of the service and to the location of the feed hopper. With underfeed machines, *i.e.*, those fed under the downcoming hammers (see Fig. 50), and with a relatively coarse discharge grid, the breaker plates form the bottom of the feed hopper, they are usually made with plane surfaces, they terminate and the grid starts at or near the 45° line through the shaft center. They are inclined at about 45° to the horizontal (a ready sliding angle) when the feed is dry and nonsticky; for wet or sticky feed the inclination is increased to 75° or more. For fine crushing with underfed machines the breaker plate is extended downward to a terminal point directly below the shaft and corrugated parallel to the shaft, whereas the grid is extended upward correspondingly to enclose about 180° of the periphery. In overfeed machines the breaker plates are placed along the top of the housing and are usually made with coarsely stepped surfaces so arranged as to present flat surfaces at right angles to particles flung off tangentially by the hammer blows. In center-feed types the breaker plate occupies the upper part of the housing on the downcoming side and is ridged or corrugated. At NORRIS DAM corrugated breaker-plate surfaces produced a finer product than those with smooth surfaces.

Breaker plates should be heavy so as to make renewal infrequent, and of such shape that the amount of waste is kept at a minimum. The latter desideratum points to small sections, but joints concentrate wear; consequently sectionalizing that involves jointing is usually confined to places such as the feed lip in underfeed machines where wear is excessive and where failure to sectionalize would result in a very high discard ratio. Plates should be backed against the casing, if possible; otherwise they must be backed in some other fashion to prevent flow when worn thin. They should be designed for reversibility; they should be fastened by bolts that do not go through to the wearing face, since wear concentrates around bolt heads thus placed. Stepped plates should be so arranged that successively lower steps successively approach the hammer circle. For secondary work the lowest bar should be adjustable to compensate for wear. Relatively close clearances here in fine work take much wear off the grates. Some sort of stop is advisable, if adjustment is to be made with the mill running, to prevent pushing the plate into the hammer circle. Usual MATERIALS are chilled iron or alloy steels, cast manganese steel being the most usual. At NORRIS DAM, cost of manganese steel plates was 0.75¢ per ton of product, or about half the hammer cost.

Grates or CAGES occupy from 135° to 180° or more of the periphery of the shell surrounding the rotating hammers, usually the bottom portion, but in some fine-crushing machines they are moved around toward the upcoming side of the circle. Various forms of grate and supports are shown in Fig. 52. Perforated-plate cages are also used. The bars are usually made wedge shaped and set with broad ends inward so as to offer a flaring discharge path and thus lessen clogging, but in some mills they are rectangular in section and consequently reversible. They must be strong enough to resist the stresses set up when pieces wedged between them and projecting inward to the hammer circle are struck. Intermediate support is usually provided by the frame in which they are carried. Cross-section depends on service and is only to be determined by experience, since the stresses cannot be approximated. Metal loss per ton crushed will be less, however, if they are so designed as to minimize change in discharge aperture with wear, *i.e.*, if the metal provided for strength is put into depth rather than width. This presents an overturn problem, however, as well as a lack of transverse strength to resist the stresses set up by sweeping blows against wedged material. Excessive thickness is inadvisable because loss in capacity and increase in power consumption owing to lost sharpness on the leading edge becomes serious long before breakage is imminent. The grate frame, in secondary machines particularly, should be so mounted as to permit adjustment toward the hammer circle to compensate for wear. Close setting promotes attrition breaking but, of course, increases wear (see Fig. 57). Bars are made of chilled iron or alloy steel. At NORRIS DAM tool-steel bars cost 4 times as much as cast-manganese-steel grates, with tapered bars 1 in. wide at the top (1.82¢ per ton of product *vs.* 0.51¢). Reversible bars 1 1/2×5-in. section with 6 spacing lugs in 4-ft. length were also used. Blank plate requires more power than perforated plate.

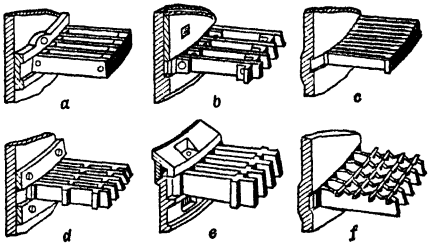

FIG. 52. Hammer-mill grates (*124 J 930*).

Grate bar spacing determines thickness of the largest product particles, but the size of product is normally much finer than would be expected from the grate acting as a simple screen. In secondary and fine service the closing guard is usually and properly a separate screen, in which case grate spacing is ordinarily 6 to 8 times the screen aperture; the smaller the spacing, of course, the less the circulating load, but ultimate capacity is not greatly affected unless the spacing is too small.

Grate frame is usually arranged to permit varying the spacing according to the fineness of product desired.

Feeding. Feed must penetrate the hammer circle, if the full area of the crushing surfaces of the hammers is to be utilized. This necessitates a balance between falling velocities and rotor velocities that will differ with the position and direction of feed entry with respect to the rotor, and with the depth of the crushing face of the hammer. If feed-particle velocity is too great, the rotor disks and hammer shanks wear excessively; if penetration is insufficient, hammer heads round off at the outer ends, material is struck glancing blows with consequent lack of force and imposed velocity, capacity falls off, circulating loads build up, and the machine cannot be made to draw full power without quick overloads and clogging. In center-feed machines the feed-box height is made adjustable to permit control of penetration, and adjustment with hammer-head wear.

Manufacturers. Allis-Chalmers Mfg. Co., American Pulverizer Co., Dixie Mach. Mfg. Co., Gibson, W. W., Gruendler Crusher & Pulverizer Co., Jeffrey Mfg. Co., Pennsylvania Crusher Co., Sturtevant Mill Co., Williams Patent Crusher & Pulverizer Co.

Manufacturers' data, composited from a number of catalogues, are given in Tables 26 and 27.

Forces in hammer-mill breaking are not known with any great degree of accuracy. The general method of analysis is, however, well established, and some of the variables can be approximated for any given operation.

If, in Fig. 53, *H* represents a section of a steel hammer moving in the direction indicated by the arrow, with velocity *u*, and *b* is a steel ball of weight *w*, which, at the instant of impact was falling vertically

(with no component of velocity in the direction of the hammer movement), then b will be deformed somewhat as is shown and, if the mass of H is sufficiently great that it does not lose any appreciable velocity due to the impact, b will thereafter attain a velocity v in the direction of u of a magnitude approximately equal to $1.8u$. If M is the momentum of b in the direction of u as b is thrown from H, then $M - 0 = M$ is the change in momentum, and the average force F_{av} of the blow is M/t, where t is the time interval required for b to attain the velocity v. Hence, for the condition postulated, $F_{av} = 1.8wu/gt$. The maximum force, F_{max} = approximately $1.5F_{av}$.

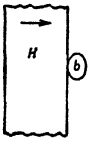

FIG. 53. Elastic sphere against hammer face at instant of impact.

The value of t for highly elastic impact is about 0.001 sec. For inelastic impact, such as with a lead ball, $v = u$ and t = about 0.002 sec. Values of v and t for rock probably lie between those for steel and lead.

The same formula applies to the case when a piece of rock is thrown against a breaker plate. Taking values for rock as for lead, and English units, $F_{max} = 1.5wu/32.2(0.002) = 23wu$ lb. With lumps of rock sufficiently large to deflect the hammer, u decreases and t increases to an unknown extent, but probably sufficiently to cause marked drop in the effective F_{max}. Magnitudes of F_{max} from the equation are: 3 lb. for a ¼-in. cube; 21 tons for a 6-in. cube of rock of sp.gr 2.6, when $u = 90$ f.p.s.

Other factors that are of importance in impact crushing have been developed in the research on impact testing of metals. The internal stresses produced by a given force increase markedly with increase in the

Table 26. Hammer mills for primary crushing

(Data selected from manufacturers' catalogues)

Size of receiving opening, in.	Approximate capacity, tons per hr. *a*	R.p.m. *b*	Motor hp. *c*	Weight, lb.
18×24	30 to 40	700 to 1,200	60 to 75	9,600
18×36	35 to 60	700 to 1,200	75 to 100	11,800
18×48	50 to 75	700 to 1,200	100 to 125	14,600
20×24	50 to 60	800 to 900	75	15,000
20×48	100	700 to 800	100	37,000
21×24	30 to 50	900 to 1,200	60 to 90	13,000
21×36	50 to 70	700 to 1,000	100 to 125	17,200
21×40	75 to 100	725	150 to 200	.....
21×48	100 to 150	725	200 to 275	.....
21×58	125 to 175	725	250 to 350	.....
22×66	100 to 175	700 to 1,000	175 to 250	36,000
24×24	50 to 80	600 to 900	75 to 125	13,000 to 18,000
24×28	100	700 to 800	100	21,800
24×36	70 to 100	600 to 900	100 to 150	17,000 to 22,000
24×48	100 to 150	600 to 900	150 to 200	25,000 to 26,000
24×60	175 to 200	800 to 900	225	30,000
24×66	140 to 175	600 to 800	200 to 250	36,000
28×32	125	700 to 800	125	25,400
28×42	165	700 to 800	175	29,000
28×52	220	700 to 800	225	30,000
28×62	250	700 to 800	250	34,000
28×72	290	700 to 800	300	36,500
36×38	75 to 100	725	150 to 225	.....
36×43	100 to 150	725	200 to 275	.....
36×58	125 to 175	725	250 to 350	.....
36×68	150 to 200	725	300 to 400	.....
38×48	165	700 to 800	175	43,000
42×48	150 to 200	700 to 800	200	70,000
48×48	150 to 225	500 to 800	200 to 350	46,000 to 48,000
48×52	250 to 300	700 to 800	250 to 300	80,000
48×58	250	700 to 800	250	48,000
48×62	300 to 350	700 to 800	350	90,000 to 94,000
48×68	290	700 to 800	300	50,000
48×70	200 to 300	500 to 700	300 to 400	66,000
48×78	330	700 to 800	350	53,000
66×70	500	650	400 to 500	190,000 to 195,000

a Crushing medium limestone to about 1 ½-in. mesh. See ***Performance.*** For machines up to 20,000 lb. weight, the maximum feed size should not exceed 6-in. for limestone, or 9-in. for gypsum, burnt lime, shale, or the like; bituminous coal may be any size that the machine will receive. Machines from 20,000 to 40,000 lb. weight will take 12- to 14-in. limestone, and 18- to 20-in. gypsum, etc. The heavier machines will take medium-hard limestone as large as will enter the receiving opening, but in general it will be wiser to choose one of the heavier machines at a given size of receiving opening, if run-of-quarry rock is to be fed.

b See Figs. 58, 60.

c See ***Power consumption,*** p. 86.

velocity of force application, so that forces of a given magnitude applied by a hammer mill are much more effective in breaking than forces of the same magnitude applied gradually. The rise in local stress in impact loading is much greater than in static loading; this is important in that loading of rock fragments occurs on relatively small local areas. The yield point increases with increase in rate of loading whereas the ultimate strength does not, so that, with sufficiently rapid loading, yield point may pass ultimate strength and brittleness be thus engendered. In other words, a rock that tended to be plastic in jaw-crusher breaking might be brittle in a hammer mill.

Table 27. Hammer mills for secondary crushing

(Data selected from manufacturers' catalogues)

Size of receiving opening, in.	Approximate hourly capacity, tons, with grates spaced —in. *a*						R.p.m. *b*	Motor hp. *c*	Weight, lb.
	Without grates	1 1/4	1	1/2	1/4	1/8			
4 1/2×9	12	.....	.....	10	5	2 1/2	1,800 *d*	15 to 20	1,400
4 1/2×12	40	.....	30	24	14	7	1,200 *d*	40 to 50	4,200
8×8	.....	.....	1 to 2	.....	...	1/2 to 1	2,000 to 3,000	7 to 10	1,100
8×12	.....	.....	3 to 4	.....	...	1 to 2	1,500 to 2,000	12 to 15	2,000
8×18	.....	.....	4 to 6	.....	...	2 to 3	1,400 to 1,800	20 to 25	2,900
10×24	.....	.....	7 to 8	.....	..	4 to 5	1,100 to 1,450	30 to 40	4,500
11×11	.....	.....	4 to 6	.....	...	2 to 2 1/2	1,500 to 1,800	12 to 20	3,000
11 1/2×25	80	70	65	47	31	18	900 *d*	100 to 125	11,000
11 1/2×37	120	105	97	71	47	27	900 *d*	150 to 200	14,000
11 1/2×49	160	140	130	95	63	36	900 *d*	200 to 250	17,000
12×15	48	39	36	29	17	9	1,500 *d*	50 to 60	3,800
12×24	.....	.....	14 to 16	.....	...	8 to 10	900 to 1,200	50 to 60	6,400
12×30	.....	.....	20 to 25	.....	...	12 to 15	900 to 1,200	65 to 75	7,000
12×36	.....	.....	30 to 35	.....	...	14 to 16	900 to 1,200	75 to 100	8,000
13×20	.....	.....	10 to 15	.....	...	4 to 5	1,400 to 1,600	30 to 40	4,800
15×34	.....	.....	.....	30 to 100	...	.....	1,000	100 to 125	.....
15×39	.....	.....	.....	40 to 130	...	.....	1,000	125 to 150	.....
15×45	.....	.....	.....	50 to 150	...	.....	1,000	150 to 175	.....
17×24	.....	15 to 20	.....	6 to 10	...	.....	1,000 to 1,200	25 to 35	7,500
17×27	.....	.....	.....	45 to 165	...	.....	850	80 to 100	.....
17×33	.....	.....	.....	50 to 210	...	.....	850	100 to 125	.....
17×38	.....	.....	.....	65 to 250	...	.....	850	125 to 150	.....
17×44	.....	.....	.....	75 to 300	...	.....	850	150 to 175	.....
22×24	.....	20 to 30	.....	10 to 15	...	.....	1,000 to 1,200	40 to 50	7,800
24×32	.....	30 to 40	.....	15 to 20	...	.....	1,000 to 1,200	50 to 75	9,000
24×42	.....	40 to 50	.....	20 to 25	...	.....	1,000 to 1,200	75 to 90	10,800
24×52	.....	50 to 60	.....	25 to 30	...	.....	1,000 to 1,200	125	12,000
24×62	.....	60 to 75	.....	30 to 35	...	.....	1,000 to 1,200	150	13,500
24×48	.....	.....	.....	40 to 50	...	.....	850	175 to 200	26,000
28×72	.....	.....	.....	65	...	.....	850	300	36,500
48×62	.....	.....	.....	100	...	.....	750	350	90,000

a Crushing medium limestone from 4- to 6-in. limiting size. See ***Performance.***
b See Figs. 58, 60.
c See ***Power consumption,*** p. 86.
d Maximum.

Performance data are scarce and lack much essential detail. Table 28, supplied by PENNSYLVANIA CRUSHER CO., was made up from eight operating records on mills breaking cement rock.

At Howes Cave plant of NORTH AMERICAN CEMENT CO. (*IC 6553*) a machine with 48-in. hammer circle at 900 r.p.m. crushed <9-in. limestone through a 2-in. grid at the rate of 117 t.p.h.; >1/4-in. from this product was further reduced through a 1/4-in. grate in a second machine with 100-hp. motor at the rate of 38 t.p.h. At the Security plant of the same company (*IC 6554*) an SXT-14 Pennsylvania machine at 720 r.p.m. crushed <9-in. limestone to <1/4-in. at the rate of 128 t.p.h., and a secondary machine with 42-in. hammer circle at 900 r.p.m. crushed the product through a 1/2-in. grid at 75 t.p.h. At UNIVERSAL ATLAS CEMENT CO., Hudson plant (*42 #2 RP 31;* see also Sec. 3A, Fig. 18) a 58-in. 16-disk hammer mill with 700-hp. motor takes <9-in. product at the rate of 250 to 310 t.p.h. and reduces it to 96% <1-in. in one pass. Feed drop of 5 ft. is sufficient for penetration. Motor is reversed every third day. Consumption of manganese steel is about 6 lb. per 1,000 tons of feed. Power consumption is 1.6 hp-hr. per ton. At NORRIS DAM (*PC*), a 42(diam.)×48-in. machine, with grates spaced 2 in., running at 900 r.p.m., crushed 150 t.p.h. of dolomite containing 6% SiO_2 from <3-in. to <3/8-in. Power consumption was 0.95 hp-hr. per ton; maintenance, 5¢ per ton. Product contained about 25% <100-m. Ferrosilicon is reported (*PC*) crushed from <2-in. to <20-m. in closed circuit at the rate of 10 t.p.h. in

a 38×30-in. machine running at 1,150 r.p.m.; power consumption 3.25 hp-hr. per ton; maintenance, 25¢ per ton. The machine has a variable-speed motor; when speed is dropped to 850 r.p.m. and closing screen is changed to 1/4-in., production rises to 15 t.p.h., power consumption is 1.50 hp-hr. per ton, and maintenance is 10¢ per ton. Aluminum oxide is crushed from <4-in. to <4-m. at the rate of 2.5 t.p.h. in a 32×11-in. machine in closed circuit with a screen; speed is 1,250 r.p.m., power consumption 5 hp-hr. per ton, and maintenance 40¢ per ton.

Table 28. Performance of hammer mills on cement rock *a*

Rotor, diam. × length, in.	42×36	48×58	48×58
Speed, r.p.m.	900	720	720
Feed: Limiting size, in.	5	8	8
Tons per hr.	100	300	500
Power: Motor hp.	250	400	400
Consumed, idling, hp.	22	38	38
Hp-hr. per ton crushed	1.8	0.8	0.5
Product: % retained on			
1 1/2-in.	.....	.....	5.0
1	.....	.....	13.9
3/4	0.3	5.3	19.1
3/8	13.1	21.5	39.2
4-m.	25.4	22.4	.....
8	20.6	20.5	13.6
14	14.8	12.8	2.2
28	6.1	6.5	1.7
48	5.5	3.8	0.9
100	3.6	3.0	0.4
<100	10.6	4.2	4.0
Maintenance, cents per ton	1 1/2	3/4	3/8

a Laminated, medium hardness (10,000 to 15,000 lb. per sq. in. in compression), relatively nonabrasive.

Operating variables are number and shape of hammers, with consequent differences in diameter and configuration of hammer circle; speed; number, size, arrangement, and spacing of anvil or breaker plates; height of feed chute; spacing of grate bars, both as to aperture and approach to the hammer circle; and feed rate and feed size.

Size of product depends on character of rock, size of feed, type of mill, whether or not a grid is used; whether the mill is in open or closed circuit; if the former, on the grid spacing; if the latter, additionally on the aperture of the closing screen; the shape, spacing and extent of wear of the breaking surfaces; rotor speed; clearance of hammer circle with respect to the lowest breaker plate and to the grids; hammer weight; etc. Some of these relationships for an impactor (machine without grid) are given in Figs. 54 to 59. These curves represent results (*PC*) of extensive tests on an operating machine working on tough river gravel, and, while not applicable directly as to magnitudes for softer materials, are dependable as to trends.

Fig. 54 shows that if the crushing zone is completely swept by hammers, as it was with three rows of stirrup hammers, two to a row, an increase of 50% in NUMBER OF HAMMERS produces but little additional

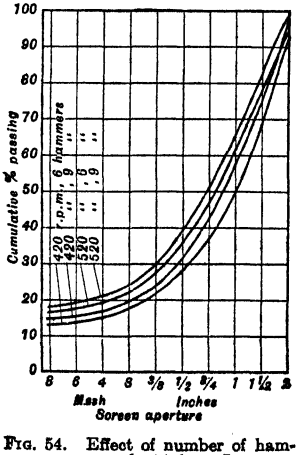

FIG. 54. Effect of number of hammers on product of an Impactor (feed, river gravel, 4 1/2~1 1/4-in.).

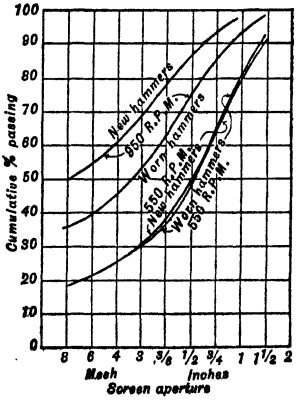

FIG. 55. Effect of hammer wear on Impactor product (feed, river gravel, 4 1/2~1 1/4-in.).

crushing effect, and that this effect is less the higher the speed. Fig. 55 shows the loss in crushing effect due to WORN HAMMERS when speed is high enough for effective breaking (950 r.p.m.); it also shows that when speed is too low (550 r.p.m.) the state of the hammers makes little difference; in this event, in a grid machine, stalling would occur rapidly unless feed rate were greatly reduced below that at 950 r.p.m.

with new hammers. Fig. 56 indicates that within the usual range of ANVIL ADJUSTMENT the variation in crushing due to change in clearance is not great, but is definite, and that crushing increases with reduction in clearance. The effect is greatest in the coarse end of the product, as is to be expected. Fig. 57 shows that with a cage-type mill, crushing a moderately hard bituminous coal, decrease in clearance

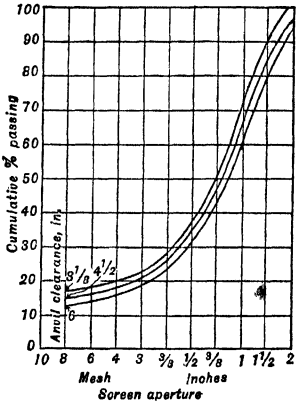

FIG. 56. Effect of anvil clearance on Impactor product (river gravel, 4 1/2~1 1/4-in.; 420 r.p.m.).

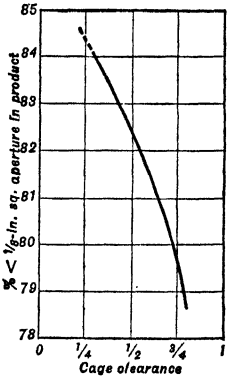

FIG. 57. Effect of cage clearance on size of bituminous-coal product.

has considerable effect on size of product. Fig. 58 shows the primary importance of high SPEED, particularly in the production of fines; the increase in fines is more than proportional to the increase in speed over the range investigated. Average speed is about 200 f.p.s. at the tip of new hammers, being, in general, somewhat lower for coarse feeds and coarse products and *vice versa*. This follows from the effect of particle size on striking force. Fig. 59 indicates that FEED SIZE has little effect on the amount of <100-m. in the product but that the limiting reduction ratio increases with increase in size of feed from about 2 for the finer feeds tested to 3 for the coarsest. The ratio of 50%-sizes (50% retained) is apparently largely dependent upon the smallest particles in the feed; for the conditions tested it was 5.5 for

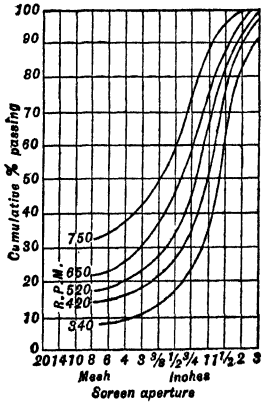

FIG. 58. Effect of speed on product of an Impactor (river gravel, 4 1/2~1 1/4-in.).

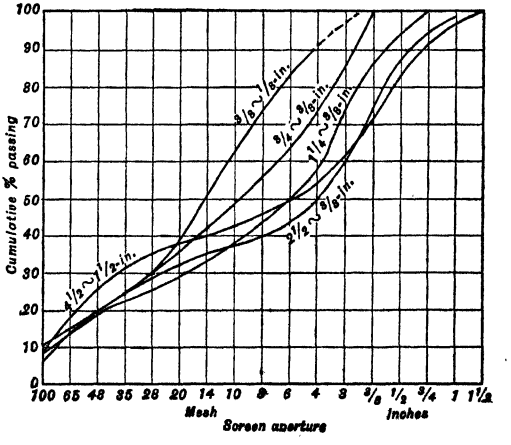

River gravel. Feed sizes shown on curves. 950 r.p.m.; 9 stirrup hammers; 9-ft. drop; 3-in. anvil clearance.

FIG. 59 Effect of feed size on size of product of an Impactor.

1/8-in. lower size, from 6 to 8 for 3/8-in. lower size, and jumped to 19 for 1 1/2-in. lower size. In so far as the 50%-point measures the average size of a comminuted product, the conclusion would seem to be that this type of mill is decidedly more effective in reduction of the coarser (1 1/2-in. min.) than the finer (1/8- and 3/8-in. min.) feeds.

Mineralogical character of feed affects performance somewhat unexpectedly. In general hard tough rock crushes at a lower rate and requires more power than the complete converse, but reduction in

capacity with increase in power consumption with a given cage aperture and setting are reported in changing from Elkhorn to Pocahontas coals, and some clays are more difficult to crush than hard, compact limestones. The limiting machine factor is, in many such cases, the cage aperture and placing; it is probable that most of the discrepancies in reported results would disappear with suitable experimentation on this score.

Shape of product is of great importance in producing stone and sand for concrete work (see Sec. 3, Art. 41). Shape characteristics of products for different intermediate crushers have not yet been established generally.

At NORRIS DAM, crushing cherty limestone, <1/4-in. hammer-mill product was most nearly equiaxed, followed in order by rod mills, short-head cones, and rolls. The effect was more pronounced on the carbonate than on graywacke (*42 #6 RP 40*). An entirely different order of machines might be found with a different rock.

Power consumption in a hammer mill is dependent upon the amount of crushing work that the mill does, which, in turn, is determined primarily by the character of feed, the size of product, the speed, and the feed rate. Fig. 60 shows the relationship between feed rate, speed, and power consumption for one set of conditions; the trend is characteristic of all.

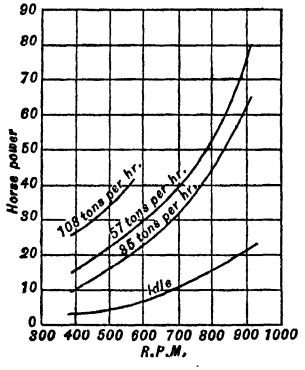

Feed, 4 1/2~11/2-in.; products, see Fig. 57; 9 hammers; single-anvil cage.

FIG. 60. Power consumption *vs.* speed in crushing river gravel at different rates in an Impactor.

The following data on crushing two bituminous coals at TOLEDO FURNACE (*PC*) in the same mill show that the effect of hardness of feed is not always what would be expected: Elkhorn coal (very hard bituminous), 168 t.p.h., 1.56 hp-hr. per ton, product 66% <1/8-in.; Pocahontas coal (very soft) 140 t.p.h., 3.3 hp-hr. per ton, 82% <1/8-in.; moisture was 3.9% in both cases. The probable explanation of reduced capacity with the softer coal is screen clogging, probably owing to the immediate shattering and rush to the screen; the rise in power consumption under such circumstances is caused by the resistance of material on the cage; that such a condition exists is indicated by the relative finenesses of product; the remedy would be to use larger cage apertures for the softer material. Effect of CAGE SPACING (distance from inner surface of cage to hammer circle) on power consumption is shown by the following runs on Elkhorn and Pocahontas coals at TOLEDO FURNACE: Elkhorn: close, 266 hp.; medium, 246 hp.; far, 220 hp.; Pocahontas: close, 220 hp.; medium, 204 hp.; far, 179 hp. Cage aperture was 1 1/2-in. in all cases; feeds were all rather wet. Usual motor allowance for mills crushing Pennsylvania bituminous coals to 70% <1/8-in. is 2 hp-hr. per ton; consumption ranges from 0.5 to 2.0 according largely to the extent of crushing, the moisture in the feed, and the sharpness of the steel.

Motors. A well-built hammer mill in secondary or fine service, with feed finer than 3-in., may be powered with a motor of not more than 15% overload capacity; if the feed size runs up to 4- or 5-in., peak loads will run 25 to 33% above normal full-load power draft; in coarse-crushing the power draft may fluctuate as much as in a jaw crusher (Art. 2). Recommended motor sizes are given in Tables 26 and 27.

Moisture in feed decreases capacity and increases power consumption markedly through the critical range in which fines are rendered sticky. With bituminous coal, capacity reduction is 30 to 50% and power increase about the same. The critical moisture range for most materials is about 6 to 10%. The cause is, of course, clogging of the grid. The remedy, if drying or further wetting is impractical, is to increase cage aperture or, if limiting size is important, to use a gridless machine and do the necessary screening on separate screens, better fitted for difficult separations, and where clogging will not cause excessive power consumption.

Feed rate should be regular; otherwise grid mills tend to clog on the rushes. In some grid mills in secondary service, especially with new steel and exceptionally coarse feed, the motors cannot be kept up to full-load power on account of incipient clog-up and consequent peak loads that tend to follow slugs of segregated coarse feed material.

Circulating loads vary materially with size of feed, feed rate, number of rows of hammers, extent of wear of hammers and breaking plates, moisture content, and resulting effect on screen efficiency. The fines returned from an inefficient screen tend to cut down crusher capacity, thus aggravating the circulating-load build up. Circulating load at NORRIS DAM with 1 1/2- and 2-in. grid spacing and 1/4-in. closing screen ranged from 50 to 100% of new feed; the circulating load all passed a 1-in. square hole.

Free fall of feed from feed chute to crushing zone determines penetration of hammer circle by the feed particles, and thereby affects both capacity and wear. If free fall is too

small, the particles are struck glancing blows, with resulting loss of impact and high wear on the outer edge of the hammers; if fall is too great, there is excessive wear on hammer shanks, rotor disks, and the shaft itself, and capacity is again low. The proper height, which depends, of course, on speed and on hammer shape, may be calculated from the theoretical formulas for gravitational fall with some assumed penetration. In the tests recorded in Figs. 54 to 58 it was found that a height calculated to give a 7-in. penetration resulted in even hammer wear and maximum capacity.

Maintenance in the form of renewals of hammers, anvils, and grids is a limiting factor in adoption of hammer mills. On highly abrasive materials in fine-crushing service hammers may require reversal several times per shift, whereas in intermediate crushing of soft limestones wear may be as low as 0.003 lb. per ton.

In crushing siliceous gravel the wear of Cr-Ni-Mo HAMMERS (450 to 500 Brinell) was 0.096 lb. per ton on 4 1/2~1 1/2-in. feed and 0.054 lb. per ton on 2 1/2~3/4-in. feed; consumption of manganese-steel hammers on the coarser feed was 0.063 lb. per ton, and on the finer feed 0.058 lb. Loss in weight of ANVILS (700 Brinell) in crushing 2,200 tons of gravel was 13 lb. from the hopper anvil, 16 lb. from the first cage anvil, 13 lb. from the second, 9 lb. from the third, and 8 lb. from the fourth, a total loss of 0.27 lb. per ton.

The importance of maintaining sharp corners on hammers is shown in Fig. 55. It is also important to maintain the edges of anvil blocks and of grate openings. Stelliting of hammers and bars, reversal of cage bars, and reversal and rerolling of plate cages well in advance of serious enlargement of aperture pay well in maintenance of capacity and reduction in power consumption.

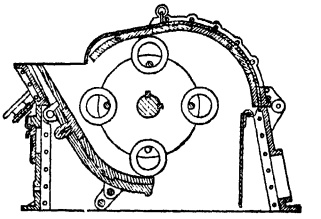

FIG. 61. Universal ring-type crusher.

Ring crusher (Fig. 61) is a modification of the hammer mill in which heavy rings instead of flailing hammer arms are hung on the disk pins or on short arms projecting therefrom. It is recommended by the makers for hard abrasive materials in intermediate or secondary service. The grate is eliminated in the form shown and the circuit closed by an outside screen, but grate forms are also made.

Symons impact crusher (*42 #3 RP 62*) comprises impact plates attached radially between and near the periphery of two parallel circular disks carried on a heavy horizontal shaft driven at high speed, and a heavy stop plate carried on the housing in such position that, with a central top feed, particles struck by the impact plates are thrown against the stop plates. The machine has no grate. It is recommended for secondary crushing of the softer materials. It is asserted that the rate of arrival at the stop plate is so high that particle-against-particle crushing occurs, and that the stop plate is correspondingly protected from wear. The impact crusher at COPPER RANGE (Sec. 2, Fig. 10) utilizes a similar principle.

10. STAMPS

Stamps are a mechanical form of the ancient mortar and pestle. Two types had long use, *viz.*, the piston stamp and the gravity stamp. A third type, actuated in various ways by crank or eccentric, appeared in many different forms, but was never widely used. Use of steam stamps has been limited, with the exception of a few experimental installations, to the native-copper mills of the Lake Superior district. Gravity stamps, which found their principal field in preparing ores for amalgamation, have not been excelled as machines in which amalgamation can be performed simultaneously with crushing. With the introduction of the cyanide process, particularly the all-slime process, finer grinding than could be performed economically in stamps became necessary; tube mills were installed for final grinding and the stamps were relegated to the position of intermediate crushers. In this service they come into unsuccessful competition with more efficient machines such as rolls, cone-type crushers, and ball and rod mills; their use at present is justified only in some of the older gold mills where replacement is clearly uneconomic, and for very small gold mills treating ores by amalgamation and/or gravity concentration (see Sec. 2, Art. 23).

Steam stamp (Fig. 62) consists essentially of a die resting in a mortar *a* with perforate walls, and a pestle *b* connected at the upper end with a piston rod *c* actuated up and down by a piston in a steam cylinder *d*. The mortar rests on a heavy metal anvil block which in turn rests on an enormous block of concrete. The steam end is carried on a frame *e* which is entirely separate from the mortar. The stamp stem is kept in alignment by guides *f*, carried on transverse supports attached to the legs of frame *e*. The steam end may be simple, cross-compound, or steeple-compound. Simple stamps are operated condensing, taking steam at 115 to 120 lb. per sq. in. and making 105 to 110 s.p.m. The usual steam pressures in compound stamps are 140 to 160 lb. per sq. in. in the high-pressure cylinder and 35 to 40 in the low. Exhaust steam from the stamps has been used, mixed with boiler

steam, if necessary, to run steam turbines. This is a considerable advance in steam economy. SHOE is made of chilled cast iron, weighs 750 to 800 lb. new and 300 to 400 lb. when discarded; life is 4 days to 2 weeks. The complete stamp stem, shoe, piston, and piston rod, weighs 5,500 to 7,900 lb. The lifting velocity is 8 to 10 f.p.s. and falling velocity 20 to 24 f.p.s. The striking force of the shoe is of the order of 25 to 50 tons. The MORTAR may be circular or rectangular. The bottom is protected by a false die on which the crushing die rests. LINERS and DIE are made of chilled cast iron. The die weighs about 800 lb. new and about 500 lb. when discarded. The life is 6 months to 1 year. SCREENS surround 50 to 75% of the periphery of the mortar above the liners. The usual height of the bottom of the screen above the top of a new die is 9 to 10 in.; with a worn die the height increases to 13 to 16 in. Screens are punched plate with $^5/_{16}$-in. to $^5/_8$-in. round openings. One panel is usually covered with screen having 50% larger apertures than the balance in order to pass copper that is free but cannot escape through either the finer screen or the HYDRAULIC DISCHARGE. The latter, in its simplest form, is an inclined pipelike opening through the mortar wall, up which water is introduced into the mortar at such velocity that only the largest particles of metallic copper can settle against the current. Another form has a small plunger jig, arranged to feed from a slot in the side liner just below the mortar grate. Either type will remove copper between $^5/_8$-in. and 4-in. size. Larger lumps must be manually removed; smaller pass the screens.

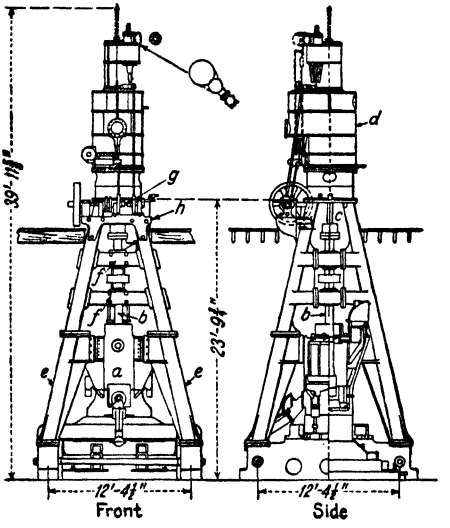

FIG. 62. Steam stamp.

The MORTAR JIG has a 1-in. screen and discharges fine copper from the hutch, coarse copper from the screen, and middling over the tailboard. The mortar rests on a solid cast-iron ANVIL BLOCK which in turn may rest either on hardwood spring timbers or directly on a concrete foundation slab. The latter increases capacity and lessens repair costs.

Operation. Steam stamps are fed by hand through sloping chutes from feed bins containing <4-in. jaw-crusher product. The operator controls the flow by means of a hook or hoe so as to keep the thinnest safe layer of material on the dies. He picks mass copper, wood, and mine waste from the feed stream. Water is introduced with the feed and also through the hydraulic discharges. The total amount introduced is from 3 to 7 tons per ton of feed.

Performance. The capacity of a simple stamp crushing amygdaloid through $^5/_8$-in. screen at QUINCY is 450 to 500 tons per 24 hr., and the capacity of a steeple-compound in the same service at the same plant is 700 to 800 tons. When crushing amygdaloid through $^5/_8$-in. screen about 70% of the stamp product is less than half the screen aperture in size and 40% is smaller than 0.1-in. At CALUMET & HECLA a simple stamp crushed 350 t.p.d. of conglomerate from <3-in. through $^3/_{16}$-in. round screens, 0.07 ton per hp-hr.

Cost of crushing in steam stamps ranged from $0.15 to $0.30 per ton (1907).

Gravity stamp battery is shown in Fig. 63. The essential parts are the frame *A*, mortar block *B*, mortar *C* containing die *D* on which ore is broken by a pestle composed of shoe *E*, boss head *F*, stem *G*, and tappet *H*. The pestle is lifted through the tappet by means of cams *I* carried on cam shaft *J* driven by pulley *K* and belt *L* from pulley *M* on countershaft *N*. Ore to be crushed passes from the bin *O* through the automatic feeder *P* to the mortar and is discharged, when fine enough, through screen *Q*. Stamps are rated on the weight of the falling part. The usual weights in American mills are from 1,250 to 1,500 lb. In South Africa 1,500- to 2,000-lb. falling weights are more usual. Old California practice was to use 850- to 1,050-lb. stamps and many of these are still found.

Weight of a complete 5-stamp battery, excluding wood of frame, ranges from 20 times the weight of an individual stamp for batteries under 1,000-lb. falling weight to about 15 times for heavy stamps. Of this total, the weight of the falling parts and mortar is about 55 to 65% for stamps under 1,000-lb. increasing to 75 to 80% for the heaviest stamps.

Frames are commonly made of timber, but cast iron, structural iron, and reinforced concrete have also been used. Timber frames: Main posts are commonly 12×24-in. or 12×26-in.; sills and girts 10×12-in. or 12×12-in., and guide timbers 12×12-in. and 12×14-in.

Mortar commonly holds five dies. A typical mortar is shown in Fig. 64. Weight ranges from 6 times the falling weight with light stamps to 9 or 10 times with heavy stamps. The narrow, straight-backed mortar shown in Fig. 64 is designed for rapid discharge and high capacity. It is cast roughly as a deep box with feed opening *A* at the back and discharge opening at the front. The screen *C* is held in the discharge opening by means of wedges *D* which press the screen frame tightly against planed surfaces on the mortar. Chuck blocks *E*, held in place by wedges, are inserted for the purpose of varying

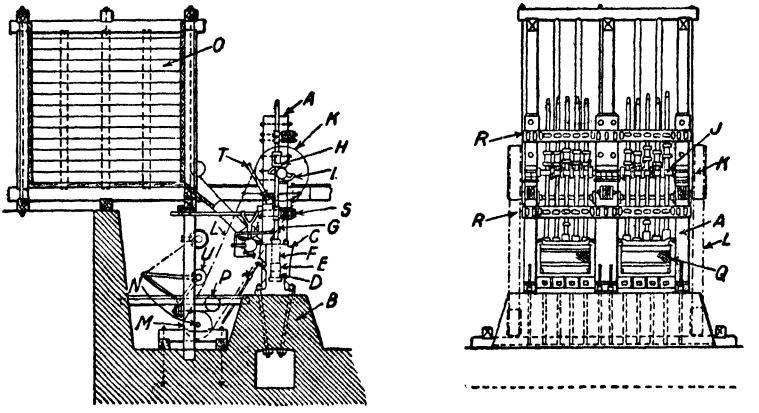

FIG. 63. Typical 10-stamp battery.

the height of the screen. Where amalgamation is practiced it is usual to mount a copper amalgamating plate *F* on the chuck block in order to catch some gold in the battery. A wooden cover *G* to prevent splash rests on a shelf cast on the walls of the mortar. It is provided with holes for the stamp stems. Liner plates *H* in the feed chute, sides, and ends protect the casting from wear and are easily replaceable. Amalgamating mortars are wider and are provided with a rear amalgamating plate as well as a chuck-block plate; provision is made by means of a removable cover for access to the back plate without lifting the stamps. Crushing is not so rapid as in the narrow mortar; such a mortar is used when amalgamation in the battery is more important than rapid crushing. Feed opening usually extends the length of the three center stamps but in some mortars is made full length. Feed is supplied in a narrow stream at the center and is distributed by the swash of pulp. Design of a mortar has considerable influence on operation. With ores containing minute particles of rusty gold which require burnishing before amalgamation can be accomplished, fine grinding is necessary and a wide mortar with back and front plates and a fine screen should be used, if the battery is depended upon for all of the crushing. With a free-milling ore containing coarse gold that is easily separated from the gangue, a narrow, single-discharge mortar is properly used. This mortar should also be used where the purpose is high capacity, and later machines are depended upon for completion of the grinding. The limit of narrowness is imposed by the requirement of a space between the dies and front and back walls greater than that of the largest particles of feed in order to prevent wedging therein with consequent strain on the stem. For maximum capacity with minimum stem breakage the back should be about 2 1/2 in. from the back of the dies and the screen about 5 1/2 in. from the front of the dies. The slope of the back is set at about 75° from horizontal and the screen at 75° to 80°. Average life of 5,500-lb. mortars at HOMESTAKE (4.5-ton stamp duty) was 3 years.

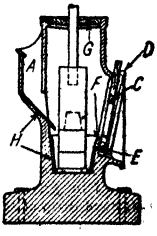

FIG. 64. Narrow straight-backed mortar (Homestake type) with broad base for concrete mortar block.

Sectional mortars are made for shipment into inaccessible regions. The sections are made so that no piece much exceeds 300 lb. weight. Stems are made somewhat lighter than standard to go with sectional mortars, and a hollow cam shaft is likewise furnished.

Dies (Fig. 65) are inserted in the bottom of the mortar. They are made of chilled cast iron, semi-steel, forged steel, chrome steel, and manganese steel. Normally the shoe and die are made of the same material. It is good practice to replace dies before they are worn to full depth, for the reason that the surface becomes very irregular with wear and that crushing efficiency is thereby lost. By making dies 1/4 in. larger than the shoes, contact of the shoe with the die over the whole face of the shoe is insured even after considerable stem and die wear. This makes for more even wear of shoes and dies and higher crushing duty. Average LIFE for solid dies on ordinary ores is about 60 days. Three-year average for hard cast-iron dies at HOMESTAKE (900-lb. stamps) was 30 to 35 days (*22 IMM 74*). At NIPISSING (*48 A 13*) forged chrome-steel dies lasted 130 days with very hard tough ore; at SUAN (*119 P 916*) the same material lasted 100 to 120 days. At CHURCHILL-WONDER (*52 A 128*) the consumption of forged chrome-steel dies on hard tough quartz was 0.107 lb. per ton crushed through 3/8-in. screen. At RAINBOW chrome-steel dies lasted 100 to 120 days with 1,050-lb. stamps crushing through 4-m. Consumption of cast-iron dies at ALASKA TREADWELL (*102 J 68*) was 0.17 to 0.24 lb. per ton crushed. At ZARUMA, Ecuador (*111 J 583*), the consumption of chrome-steel dies was 0.12 lb. per ton.

Shoes (Fig. 65) are made of cast iron, chilled iron, cast steel, forged steel, chromium or manganese steel. Common practice is to use forged or alloy steel. The shank of the shoe fits loosely into a cored recess in the bottom of the boss head and is wedged in by means of hardwood wedges which swell when wet and make a firm joint. In dry crushing, steel wedges are used. WEAR OF SHOES averages from 60 to 90 days for forged- or chrome-steel shoes working on medium ores. The 3-year average for chilled cast-iron shoes on 900-lb. stamps at HOMESTAKE was 60 to 90 days (*22 IMM 74*). Forged chrome-steel shoes at NIPISSING lasted 105 days (*48 A 13*) and at SUAN 100 to 120 days (*119 P 916*). Consumption of the same material at CHURCHILL-WONDER (*52 A 128*) crushing hard tough quartz through 3/8-in. screen was 0.232 lb. per ton. At RAINBOW (*99 J 1104*) the life of chrome-steel shoes was 80 to 90 days with 1,050-lb. stamps and 4-m. screen. Consumption of chrome-steel shoes at ALASKA TREADWELL (*102 J 46*) was 0.37 to 0.41 lb. per ton of ore crushed. At ZARUMA (*111 J 583*) the consumption of chrome-steel shoes was 0.29 lb. per ton.

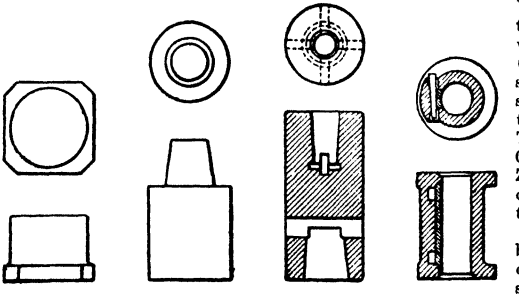

FIG. 65. Stamp parts.

Boss head (Fig. 65) forms the link between stem and shoe; it is made of cast iron, cast steel, or chrome steel, cored out at the bottom to receive the shank of the shoe and bored to a taper at the top for receiving the tapered end of the stem. Slots are cored at right angles at the bottom of the tapered openings to receive drift keys for driving out the stem and shoe. Life is indefinitely long and is terminated by breakage.

Stems are made of hammered iron or mild steel, turned and polished and tapered both ends so as to make them reversible in case of breakage. Amount of breakage depends upon the length, the location and condition of guides, and the weight of the tappet. Long stems with heavy tappets and worn guides break in a short time whereas under reverse conditions breakage is almost unknown. Steel and occasional large lumps in the feed cause eccentric strains that produce much breakage. The break usually occurs near the boss. Broken stems are turned end-for-end. Broken ends may be turned down and the stem again used, if not too short. Annealing before turning down will defer subsequent breakage. In starting, the center stamp should be started first to save pounding on empty dies with consequent stem breakage. Average life at HOMESTAKE over a 3-year period for wrought-iron stems 3 1/8-in. diameter was 4 months. Mild-steel stems 3 7/16-in. diameter at SUAN, Korea (*119 P 916*), on 1,050-lb. stamps lasted 4 years. **TAPPETS** (Fig. 65) are made of cast iron, cast steel, or alloy steel. The purpose of the tappet is to convert the rotary motion of the cam-shaft into rectilinear motion of the stamp. They are clamped to the stem by a gib pressed tight by keys driven through the keyways shown.

Cams, mounted on a shaft, working against the tappets, lift and drop the stamps. Cams are made two-armed and are ordinarily designed to lift the stamps at constant speed; material is cast iron with chilled faces, or cast or special steels. It is important that cams be closely designed for the required drop length. Life is indefinite. Breakage is normally due to CAMMING, *i.e.*, pick-up of the tappet by the cam before the stamp has completed its fall. This is caused by too long stroke or too many strokes per minute.

Height of drop may be varied within small limits, with a given cam, by changing the position of the tappet on the stem. The amount of variation is, however, small, if the tappet is to be picked up at the place on the face of the cam designed for this service. As dies and shoes wear, the height of drop is kept as nearly constant as possible by changing the position of the tappet on the stem to compensate for wear. In general, the height of drop of the stamp in front of the feeder, usually the center stamp, is made about 1 in. greater than that of the others on account of the greater depth of ore at that point. The height of drop of the end stamps is likewise normally made somewhat greater than that of the adjacent stamps in order to overcome the tendency for the ore to pile up in the ends of the mortar.

Drop sequence. Cams are spaced at equal intervals on the cam-shaft, 36° or 72° apart, depending upon whether the shaft carries 10 or 5 cams. Sequence of drop has a marked effect on performance. The following rules governing sequence have been set down: (1) No two adjacent stamps should fall in succession. (2) When one stamp is falling its neighbor should be rising. The common sequences, aimed to satisfy this rule, are the HOMESTAKE, **1, 3, 5, 2, 4** (numbering from either end), which, stated backward, is **1, 4, 2, 5, 3**; CALIFORNIA, **1, 4, 2, 3, 5 = 1, 5, 2, 4, 3**; and modifications of the latter such as **1,5,3,4,2**; and **1,5,3,2,4.** The sequence **1, 3, 5, 2, 4** comes nearest to satisfying the theoretical requirements, but many operators claim that the California sequence gives better distribution of pulp on the dies and a swash of pulp in the battery that is better fitted to cause material to pass through the screen. When a 10-stamp battery is used the sequence 1, 3, 5, 2, 4 becomes **1, 7, 3, 9, 5, 2, 8, 4, 10, 6** and 1, 5, 2, 4, 3 becomes **1, 6, 5, 10, 2, 7, 4, 9, 3, 8.**

Cam-shaft is made of a diameter sufficient to withstand the bending stresses imposed by the weight of the cams and the lifting shocks, when supported over a span equal to the distance between the main posts of the frame. It is made of a metal that will withstand the tendency to crystallization brought about by repeated shocks. Mild steel or iron, hammered out and turned to the desired diameter, are the usual metals. Diameter ranges from 5 to 8 in. according to the weight of stamps. Life is from 6 months to 5 years.

Pulley is subjected to heavy service, and experience has shown that this service is best withstood by a built-up wooden pulley; cast-iron pulleys will not stand the strain. Pulleys are finished 7- to 8-ft. diameter by 16- to 20-in. face.

Screens are made up by tacking woven wire or punched plate to heavy wooden frames. Discharge is dependent upon the type of perforation, percentage of opening, and size of opening. Punched plate is thin, quick-discharging, and cheap; if heavy enough to withstand breakage, it is probably the best available, but with narrow, high-discharge mortars failure by breakage is excessive; for heavier service slotted punched plate is used; for high capacity with coarse discharge, woven wire, which has a greater percentage of opening than plate, is used. Capacity requirements dictate screens of moderate weight even though such practice involves more frequent replacement. LIFE of screens is extremely variable; it ranges from 2 or 3 days to perhaps 2 weeks for fine screens and from 2 weeks to 2 months for coarse screens.

Prospecting mills. Most manufacturers make 1-stamp, 2-stamp, 3-stamp and 5-stamp prospecting mills with stamps ranging in weight from 250 to 450 lb., sectionalized so that no piece exceeds 300 to 350 lb. weight. Such mills require from 2-hp. to 6-hp. engines with boiler rated at 25 to 33% in excess of the engine. The boiler will weigh so much more than any part of the stamp that much of the advantage of sectionalizing is lost.

Duty is the tons crushed per stamp per 24 hr. Reported duties range from 1.8 for a 750-lb. stamp crushing through 30-m. screen to 21.1 for a 1,550-lb. stamp crushing through 1/4-in. screen. Duty depends principally upon character of ore; size of feed and product; weight, speed, and drop of stamps; shape of mortar; and condition of shoes and dies. Size of feed should not exceed 12-in. for hard ores with medium-weight stamps. Increase in screen aperture over the range of 28-m. to 1/4-in. increases capacity about 2 1/2 times but makes relatively little difference in the tonnage of fines produced.

Height of discharge is the vertical distance from the top of the die to the top of the lower rail of the screen frame. The height of discharge increases as the dies wear. In order to keep it constant, as should be done, chuck blocks of different heights are provided which vary the height of the screen above the bottom of the screen opening. For closer regulation slats 1 to 1 1/2 in. thick are used between the bottom of the screen and the top of the chuck block. The height of discharge may also be varied by use of a false bottom under the dies, but this practice is not favored because of the effect on the character of impact. High discharge results in low capacity and fine product and *vice versa*. The effect is least with fine screens

Height of drop. The amount crushed per drop increases with increase in height of drop in substantially direct proportion, but since a short drop permits more drops per minute, development was toward heavy high-speed stamps. High drop causes greater splash in the battery and, therefore, more rapid discharge.

Speed. The amount crushed per unit of time increases directly with the number of drops per minute. Number of drops per minute and height per drop are interdependent; if the height of drop is lessened, the time for completion of a cycle is decreased and the number of cycles or drops per minute can be increased. The force of the blow struck by the falling stamp can then be kept up by increasing the weight of the stamp. Average practice is 100@ 6- to 8-in. drops per min.

Power for stamps varies with the weight of stamp, height of drop, and number of drops per minute. The theoretical power required may be calculated by the formula Hp. = $WHN/(12\times33{,}000)$, where W is the weight per stamp in pounds, H is the height of drop in inches, and N is the number of drops per stamp per minute. The total theoretical power for a battery is this figure multiplied by the number of stamps. The actual power consumption exceeds the theoretical by 16 to 70%. An allowance of 25 to 30% excess is safe for purposes of estimate. Tons crushed per hp-hr. averages 0.074 with battery screens finer than 0.05-in. aperture, 0.138 for apertures from 0.05- to 0.25-in., and 0.164 for apertures coarser than 0.25-in. Truscott is quoted (*111 J 200*) to the effect that South African performance averages 0.05 ton per hp-hr. from <2-in. through 30- to 40-m. screen, 0.1 ton through 12- or 16-m., and 0.2 ton through 3- or 4-m. These figures are of the same general order as the preceding.

Moisture in product ranges from 75 to 95%. The quantity of water used per ton is less with coarse screens than with fine and less the smaller the height of discharge. The Challenge feeder (Sec. 18, Art. 22) is most commonly used; it is the most satisfactory, especially on wet and sticky ores.

Cost of crushing in gravity stamps ranges from $0.15 to $0.50 per ton.

Nissen stamp unit consists of a single stamp falling in an individual mortar which is cylindrical in horizontal section. Two stamps mounted in a frame similar to that used with the 5-stamp battery constitute a unit and require about the same floor space as one 5-stamp battery. The screen extends more than halfway around the mortar and has an area of 3.75 sq. ft., which is about 3 1/2 times as much per stamp as in an ordinary single-discharge 5-stamp battery. The mortar is made of semi-steel with manganese-steel liners. The total weight of a steel-frame battery ranges from about 10 times the falling weight for a 1-stamp unit to 5 times for a 4-stamp unit. Results of competitive runs with standard stamps were generally in favor of the Nissen.

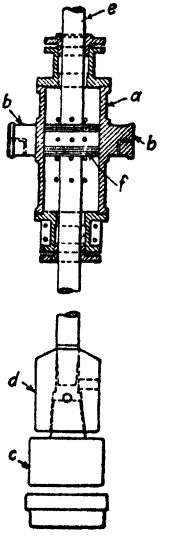

FIG. 66. Pneumatic stamp.

Pneumatic stamps, also called **CRANK STAMPS** and **HIGH-SPEED STAMPS,** have had limited use. The Holman (Fig. 66) is the best known. It consists essentially of a cylinder *a* attached by means of trunnions *b* and connecting rods to the driving mechanism. A crushing member consisting of shoe *c* and boss-head *d* is mounted on the lower end of a piston rod *e* that runs through the cylinder and carries piston *f*. Air ports are provided in the cylinder walls, one set for use with new shoes and

dies, the other when shoes and dies are half worn. The piston itself acts as a valve, closing the lower ports on the upstroke and the upper ports on the downstroke, thus providing air cushions that protect the cylinder heads. The stamp is run at 120 to 140 @ 12-in. s.p.m. and requires from 30 to 35 hp. per unit of two stamps.

Performance. At EAST POOL, Cornwall (*86 J 213*), one 2-stamp unit crushed 21 tons per 24-hr. of <3-in. feed through a 25-m. screen. The capacity of a 950-lb. gravity stamp on the same feed is 1.4 to 1.5 tons per 24 hr. At MOUNTAIN QUEEN, West Australia (*95 J 108*), a 2-stamp unit crushed 135 to 160 t.p.d. of fairly hard ore through a 10-m. screen. Metal consumption was 0.45 lb. per ton; water, 1,200 gal. per ton. At BABILONIA GOLD MINES, Nicaragua (*113 P 911*), a 2-stamp unit making 145 to 150 drops per min. crushed <2.5-in. feed through 6- and 9-m. wire screens at the rate of 25 tons per stamp per 24 hr. Water consumption was 9 tons per ton of ore. Mortar liners lasted 4 months, stems 3 months, screens 3 days. Wear of shoes was 0.48 lb. per ton and of dies, 0.17 lb. per ton. The product contained 50% >20-m. and 12% <200-m.

11. MISCELLANEOUS METHODS OF BREAKING

A variety of methods of breaking are used, more or less infrequently, accessory to the continuous machine breaking described in the foregoing articles. Most of them are intermittent, and are practiced only when some circumstance of the continuous plant renders it unavailable for the particular service.

Sledging is a common expedient for breaking lumps too large to enter the primary crusher, or to pass through storage ahead of the primary crusher. The usual arrangement for sledging is a horizontal grizzly on top of a bin, but a floor is safer and more efficient. The sledging done is usually confined to the minimum that will permit the lumps to be worked through the grizzly. Sledges are 10- to 16-lb. double-faced hammers with handles ordinarily 30 to 36 in. long; occasionally one end of the head is a wedge-shaped peen with the edge either parallel or at right-angles to the handle; such heads are of considerable utility in the hands of a skillful operator, but are difficult to handle. DUTY of a man sledging is highly variable and substantially impossible to measure. Usual practice is to mine in such a way that one topman on the bin can do all necessary sledging in connection with his other duties; if this is impossible, the economics of the situation quickly forces a change in the primary-crushing installation.

Spalling is breaking of 6- to 8-in. lumps to 2- or 3-in. size with light 2- to 3-lb. long-handled hammers having rounded peens. It is practiced only in primitive operations where labor is cheap. DUTY of a man is stated to range from 250 to 1,500 lb. per day.

Cobbing is breaking with short-handled hammers weighing 2 to 4 lb. Lumps cobbed are rarely larger than 6-in., usually 2- or 3-in. and smaller. It is practiced in primitive mills in connection with hand picking; cost is prohibitive if wages are more than 50¢ to $1 per day.

Mud-capping; blockholing. These are methods of breaking large lumps by blasting. Mud-capping consists in setting a small charge of dynamite (1/4 to 1 lb.) on top of the boulder, preferably in a depression in the surface, placing a blasting cap on top of it, covering the charge with as much mud as can be made to stay in place, and firing. In blockholing, a shallow hole is drilled in the boulder to hold the charge of explosive. Gillette (*Peele*) gives average cost per cyd. for blockholing as 17¢ and for mud-capping as 31¢, and states that both methods are much more expensive than sledging.

Mechanical hammers of the pile-driver and dropped- or swinging-ball type are occasionally used for breaking boulders in dredge pits. The pile-driver type was used to some extent in the days of mass-copper ores at the Lake Superior mines; the hammers weighed 1,500 to 2,000 lb. and were dropped 5 to 20 ft. according to the blow desired.

Heating and quenching have been practiced for breaking rocks since time immemorial. Where wood fuel is cheap, Gillette (*Peele*) places the cost of thus breaking boulders at about 15¢ per cyd., *i.e.*, less than blockholing. Richards (*OD*) cites a number of cases of heating prior to crushing in order to render rock more friable.

At BRIDGEPORT WOOD FINISHING CO., grinding quartz to a high-purity guarantee, the initial break from cobble-sized rock was made by heating to redness in a dumping furnace and then quenching in a tank of cold water; the broken product, 2- to 3-in. limiting size, was sufficiently cracked to permit secondary reduction in stone-tired Chilean mills.

Some alloys become sufficiently brittle at temperatures possible to maintain in crushing machines to permit breaking by the usual methods.

Explosive shattering is a name applied by the Bureau of Mines to a method proposed by the Bureau as a possible competitor of present commercial methods of crushing (*RI 3118, 3201; 136 J 281*). It consists essentially in subjecting the rock to be crushed to steam at a pressure of 250 lb. per sq. in. and upward for a short interval of time (*e.g.*, 2 sec.) and then releasing the pressure suddenly, whereupon the charge is ejected against an impact

plate. Experiment indicates that much of the crushing done is due to impact, but that elimination of impact (discharge against rubber) still leaves an appreciable amount of breaking, which is attributed to failure along crystal planes and the like as the result of an explosive wave. There is distinct preferential breaking as between certain minerals. The method has not had commercial use but has been mentioned in connection with one of the Bureau-designed wartime pilot plants.

12. CRUSHING PLANTS

A crushing plant comprises an integrated combination of crushing machines, sizing apparatus, storage, feeding and transport means, and sampling and control devices, the whole designed to receive rock at the sizes, rates, and times prescribed by the exigencies of the excavating operation, and to deliver a product or products sized, situated, and timed according to consumption demands. The sizes of the various machines and apparatus, and their number, differ greatly according to receiving and delivery conditions; their arrangement is dependent upon their size, the topography, and the areal spacing of the source of rock and the point of delivery of finished product. Yet despite the multiplicity of combinations of supply and delivery demands that are possible, a small number of relatively definite plant patterns has been developed, one of which, with minor variations, will satisfy almost any conceivable requirements.

Elements of a crushing flowsheet are: (1) Receiving unit; (2) primary-crushing unit; (3) secondary- or intermediate-crushing unit; (4) fine-crushing unit; (5) storage. Transport, sampling, and control are accessory; they vary in apparatus detail much more than do the elements.

Receiving comprises the means for transfer of material as excavated from the source to and into the primary crusher. It always involves some method of transportation the characteristic of which is intermittency, since the normal methods of transport from the excavation are cars, trucks, or skips, *i.e.*, discrete containers of considerable volumetric capacity. The nature of the receiving unit as a whole depends upon the necessity or desirability for some separation ahead of primary crushing, and upon the price that the designer wishes to pay at this point for uniform flow through the plant.

If hourly tonnage is small, the primary-crushing units are ordinarily correspondingly small, and some means of ironing out rushes of feed is immediately necessary. The usual expedient is a receiving hopper or bin. This is normally provided with a regulable discharge over a surface that permits rapid selection of extraneous waste such as steel, timber, rope, and dynamite. With small tonnages, primary crushers usually have small receiving openings, hence it is necessary to place a size guard at some place in the path from the excavating face to the crusher, *e.g.*, a flat grizzly over the receiving bin (see Sec. 14); this then serves also as the surface for selection of waste, as above.

If hourly tonnage is great, large primary-crushing units are employed. These can operate buried. In this case the transportation system is utilized to afford such storage as is necessary to bridge the difference in capacity of excavation and primary-crushing units, while removal of waste, if practiced, is deferred until after primary crushing.

Storage ahead of primary crushing is always troublesome because of the difficulties involved in flowing coarse material. If the crude is wet, there is the additional difficulty caused by freezing in cold weather. Hence crude storage, if necessary, is designed to interrupt flow as little as possible. If, despite such design, hang-ups caused by freezing, or packing of wet material, or bridging of coarse material occur, special provisions must be made for prevention (Sec. 18, Art. 4).

Scalping out fines from the feed to the primary crusher should be a part of the receiving plant whenever this is structurally convenient, since fines in crusher feeds increase power consumption and maintenance, and ordinarily reduce capacity. The usual scalping device is a grizzly (Sec. 7, Art. 4), the normal aperture of which is equal to the open setting of the primary crusher; aperture may be made larger, however, if it is desirable to take some burden off the primary crusher and if the secondary has excess capacity.

Feeding. Any crusher operates most efficiently when fed uniformly at a rate near maximum capacity. This requires some means of regulating flow to the machine. The usual arrangement is a feeder with push-button start-stop control under the supervision of the primary-crusher tender. The feeders are ordinarily of pan, apron, or vibrating, chain, or single- or multi-roll type (Sec. 18, Art. 22). They permit picking of extraneous waste as an incident to control.

Weighing on platform scales (track or road type) may be a part of the receiving operation; it is not of much value, however, unless accompanied by moisture sampling, which is substantially impossible with coarse primary feeds.

Primary-crushing unit is, almost invariably, one single crushing machine, since a crusher tender is always necessary for each primary machine. Preferably the receiving opening is large enough to take any lump that can be handled out of the mine, thus eliminating the

expensive operation of guard sizing from the receiving unit. The machine must be sufficiently rugged and powerful to break any lump of feed without over-strain; it is desirable that it have sufficient capacity to break at the maximum rate of mine production, thus eliminating the necessity for storage in the receiving unit. If, additionally, it can work buried, and pass any steel or timber that may come in the normal run of mining operation, it approaches the ideal.

Type of crusher. Jaw and gyratory crushers are used as primaries for hard rocks; they are available in sizes large enough to receive any lumps that can be mined by present methods, and to crush them at almost any desired rate.

The only existing mine with excavating capacity and maximum product demand in excess of the capacity of a single primary crusher is UTAH COPPER CO. There, since the demand for copper is fluctuating, two parallel mills were built, permitting complete shutdown of one in times of reduced demand. Thus the primary-crusher problem was solved as a part of the larger problem. Actually, also, the limit in receiving-unit capacity (see Sec. 2, Fig. 18) was reached at least as soon as the limit of crusher capacity.

For choice between jaw and gyratory crushers see Art. 4.

Single-roll crusher is used as a primary for the softer rocks (limestones, etc.). It likewise is available for all necessary reception and capacity demands. It is superior to jaw and gyratory crushers for ores that tend to pack under pressure, because the slugger teeth also act to push material through the breaking zone.

Hammer mills, preferably without grates, are used as primaries for very soft materials (*e.g.*, clays).

Cone crusher is a suitable primary when, as at MIAMI (Sec. 2, Fig. 22), the mining method is such that the largest lump is receivable by this machine. Capacity available in a single machine is, however, less than that of the usual primary (*cf.* Tables 1, 12, and 20), so that the utility of the machine in primary service is limited on this score.

Secondary-crushing unit presents a number of problems entirely different from those met in the primary unit. Individual machine capacities are much lower than those of the primaries, so that more than one unit must often be employed, with the resultant problem of distribution of feed. Scalping out fines ahead of the crushers becomes a necessity, if the ore is damp or clayey, and is, in any case, highly desirable. Uniformity of feed rate is essential for the best operation. If the secondary unit is also the final unit, a sizing guard on the product is ordinarily necessary, with provision of transporting means for return of oversize. The machines must be guarded against tramp iron, and frequently against other extraneous waste. Finally, it is desirable that the unit should favor the production of fines or the reverse, according to whether the final products wanted are sand and slime, or gravel sizes. Thus the secondary unit comprises, in addition to the crushing machine, screening, distributing, storage, feeding, separating, and transporting means, all suitably integrated to the particular job.

Crushers are usually cone-type in the hard-rock mills, particularly if the secondary unit is not the final unit; in soft-rock plants they are ordinarily hammer mills. For rocks of intermediate hardness, either cone-type or impact machines may be used, the choice being resolved in favor of the cone-type when capacity and operating cost are the primary considerations, and in favor of the impact type when shape of the fragments is important (see Sec. 3, Art. 41). The hammer mill is also materially cheaper in first cost than a cone-type machine of corresponding capacity.

Clogging due to wet or sticky ore is, of course, more common in secondary and fine crushers than in primaries. The usual expedient, when it is allowable, is to turn water into the circuit. This invariably increases capacity, but it also increases steel consumption markedly, owing, no doubt, to increased oxidation. At FRESNILLO (*112 A 735*) a clay-bearing oxidized ore becomes so sticky in rainy weather that the capacity of the crushing plant is, at times, reduced to less than one-third of normal. Remedies attempted are to open up the crusher throat and try to keep material moving with water and with high-pressure air. At MATAHAMBRE (*IC 6544*) primary-crusher product was immediately screened to the finishing size of the crushing plant (<3/4-in.); otherwise the sticky fines caused trouble in all subsequent crushing and screening (see Sec. 2, Fig. 14). At ENGELS (*IC 6550*), wet, sticky ore required 3 to 4 men in a 100-t.p.h. crushing plant, one on the primary crusher, one on conveyors, and one or two on bin outlets.

At BRITANNIA (*IC 6619*) clogging in rolls was mitigated materially by placing washing screens ahead of the rolls, and closing the roll circuit through the same screens.

Screening, whether for scalping only or to guard the product as well, is ordinarily done by one screen, which is in closed circuit if a guard screen, but otherwise in open circuit and serving merely as a by-pass for fines. Vibrating screens are almost invariably used in the concentrating mills. In rock-product mills making multiple sizes, trommels or the flat-slope shaker vibrators, fitted with screen sections of successively larger apertures, may be used instead of multiple-deck vibrating screens because they additionally transport and distribute their products. If scrubbing is necessary, revolving screens are almost always used, but light washing can be done satisfactorily on a vibrating or shaking screen.

Closed circuits. It is well established that production of sizes smaller than 10-m. is much less efficiently done in crushers than in tumbling mills. It follows, therefore, that when crushing to <10-m., any undersize sent back to the crusher from the guard screen is going to be comminuted, if at all, less efficiently than otherwise could be done. When the guard screen is coarser than 10-m., return of finished undersize caused by screen inefficiency is an almost complete waste of power. At the same time it takes

up space in the crushing zone that might otherwise be occupied by new feed. It consumes power almost in proportion to its volume. Hence ample screening capacity and efficient screens are essential to efficient closed-circuit operation.

Circulating loads in roll circuits range normally between 100 to 300%; they may run as high as 700% with a 10-m. closing screen, but the economy of so large a load is questionable. Circulating loads in closed circuits with fine-crushing short-head cone crushers tend to run upward of 500%; the economy of such an installation is highly doubtful, but sufficient data are not available for final decision.

Storage and distribution. If the tonnage passing the primary breaker per unit of time is in excess of the capacity of a single secondary crusher, it is necessary either to store a part of the primary-discharge stream or to split the stream into two or more parts, according to the number of secondary crushers required to keep up with the primary. Splitting a running stream of relatively coarse rock into two streams of equal tonnage and size composition is difficult, although it can be approximated by causing the stream to fall onto a vertical edge placed at right angles to the width of the stream and on its center line. It is impossible to split into more than two equal streams at one operation, or to split into an odd number of equal streams by any practicable number of operations. Hence it is usual, if more than two secondary crushers are required to keep up with the primary, to stop the stream in a bin, which, if properly designed, and equipped with suitable loading and unloading arrangements, can deliver any desired number of substantially equal streams. Use of a bin has the further advantage of ironing out the almost inevitable surges in primary-crusher discharge rates, and permitting uniform maximum loading of the secondary crushers. If secondary-crusher feed is scalped, it is customary to place the scalping screen high enough to feed the distributing bin by gravity. Bin size depends upon the storage time that must be provided, upon the number of streams to be taken off and the horizontal spacing of the take-off points, and upon the tendency for the material to segregate in entering the bin (see Sec. 18, Art. 2).

Removal of extraneous waste. Magnets are used to remove iron (except in mills treating highly magnetic ores). For types of magnets applicable see Sec. 13. It is practically imperative to remove coarse iron from the feed to cone-type crushers, and highly desirable that it be removed from the feed to all secondaries, since tramp iron is one of the primary causes of stalling and/or breakage of crushers not properly guarded. High-manganese steel is nonmagnetic, hence shovel teeth and the like, of this material, must be removed by other means.

Wood, rope, and the like, if present in harmful quantities and not removed ahead of the primary crusher, are removed by hand picking from the stream leaving this crusher. For suitable arrangements see Sec. 14, Art. 2.

Transport of crushed rock throughout a crushing plant is ordinarily done by belt conveyors (Sec. 18, Art. 6); the exceptions are the use of pan conveyors (Sec. 18, Art. 7) for short runs of coarse material at low speeds (as for hand picking), or on slopes too steep for a belt; and the rare use of bucket elevators (Sec. 18, Arts. 12 to 14) when lateral space is lacking for gaining the required elevation by belt conveyors, or the use of conveyors for elevation is, for some reason, considered impractical.

Feeding. Final delivery to secondary crushers is almost always done by a chute, the portion of which overlying the crusher is made readily removable to facilitate access to the crusher for repairs Original feed from a bin is effected by any one of several of the feeders described in Sec. 18, Arts. 22 and 23, according to the requirements of the case. For the simple case requiring only transfer out of the bin at a reasonably constant rate, apron feeders with gate or swinging-hammer control of stream thickness are ordinarily used for the coarser feeds, and belt feeders for the finer.

Fine-crushing unit presents an even more complicated problem than the secondary unit, and the answers are not so well established. The crushing machines themselves are of lower capacity than the secondary crushers; they are more sensitive to variations in size, mineralogical character, moisture content, and rate of feed; their operation is more costly; there are more varieties available; and their duties are more varied and more closely specified. Scalping and guarding the product are more frequently and urgently necessary in most fine-crushing plants than in the secondary units. On the other hand, transport, distribution, and storage are normally simpler, and waste removal is less pressing, if a good job has been done on this score in the primary and/or secondary units.

Crushing. The purpose for which the crushing is done, the prescribed maximum size of product, and the tonnage are the prevailing elements in selection of the fine crushers. In concentrating mills preparing feed for flotation, the size specification for final crushed product (grinding-plant feed) is normally between 3/8-in. and 10-m. With the usual abrasive ores this substantially narrows the choice of machines to short-head cones or rolls. Practice has largely resolved the competition between the two in favor of the short-head for a product $<1/4$- to $<5/16$-in. or larger, rolls being generally used for finer products. Recently rod mills have displaced rolls in the fine-product field in some hard-rock service (see Sec. 5, Art. 7, and Sec. 2, Figs. 19, 23, and 38). When concentration is to be done at sand sizes coarser than those treated by froth flotation, rolls and rod mills are normally used (Sec. 2, Figs. 150 to 154, 159).

Crushing for sand-size rock products frequently involves a number of considerations not present in concentrating mills. Equiaxed particles are desired for concrete sands and gravels (see Sec. 3, Art. 41); rounded grains are wanted for some abrasives and jagged grains for others (Sec. 3, Art. 1); fines are waste in many cases (*e.g.*, producing roofing granules, chick-grits, burning lime, concrete sand; see Sec. 3); the prescribed maximum size differs for different rock products, or for the same product under different specifications, through a considerable range; and there is also a wide range in breaking resistance and abrasiveness. The machines used range from short-head cones, suitable for the hardest and toughest rocks, to tumbling mills with rubber-covered rods, and include also many special machines (see Sec. 6)

Screening, whether wet or dry, is almost invariably done by vibrating screens; washing, with or without scrubbing, is a common accompaniment.

Storage in the form of surge bins is customarily provided in all well-designed fine-crushing plants, in order to insure constant feed rates to both crushing machines and screens.

Control. Interlocking automatic control of some sort between the different parts of a crushing plant is almost essential to safe and economical operation. The best systems provide an electrical interlock on starting, so designed that the final conveyor is started first and that thereafter successively no machine or apparatus can be started until all of the machines that ultimately receive its load are running at operating speed. Similarly a stall or other shutdown of any machine automatically throws out all of the machines in the interlock ahead of it. Provision is ordinarily made, however, to permit independent operation of machines preceding bins of considerable capacity, despite that discharge from the bin is cut off. Failing some approximation to this type of control, flooding of crushers, conveyors, and other machines is an inescapable and expensive incident to crushing-plant operation.

Dust collection, in more or less elaborate form, is a part of every modern crushing plant, even though the dust may have no value. Direct legal prescription, or the incidence of workmen's insurance, or public and private liability legislation would force prevention of dust in any case, but economies in plant operation more than pay the cost of even elaborate installations, and recovery of values is an important item in some cases. See Sec. 20, Art. 11; Sec. 9, Arts. 2 to 9; and Sec. 2, Fig. 29.

Crushing stages. The number of crushing operations in series in any crushing plant is determined by the maximum sizes of plant feed and product, and the receiving ability and allowable working reduction ratios for the particular crushing machines used. The continued product $R_{w_1} R_{w_2} R_{w_3}$ must be less than or equal to the ratio of limiting sizes of feed and product. If this ratio can be attained by two machines with allowable working reduction ratios R_{w_1} and R_{w_2} respectively, two stages only are necessary, etc. Working ratios for jaw and gyratory crushers rarely exceed 5, and normally fall between 2.5 and 3; the standard-cone working ratio may run to 9 or 10 but is more often between 4 and 6; short-head cones range from 2 to 10 with the mean around 5, but this includes some closed-circuit work; rolls in closed-circuit work occasionally have working ratios of 10, but the mean value from table 24 is between 2 and 3. Single-roll crushers are not so directly limited in working ratio as the preceding machines, but practically, as determined by capacity considerations, they work through much the same reduction range as jaw and gyratory crushers. The hammer mill has no real structural limit on reduction ratio, but it also is limited practically on balance between power consumption and capacity, to a ratio of 6 (rarely 8). The limiting reduction ratios of rolls and gridless hammer mills may be increased materially by closing circuit on them with a screen; this is also possible with short-head cones, although in this case it involves building up circulating load to the point that the breaking zone is packed with material, and power consumption and maintenance costs are liable to marked increases over open-circuit performances.

Storage of crushing-plant product is variously designed, depending upon the type of plant. In concentrating mills the mill-storage bin is the link between the crushing plant and the concentrating plant. It has several functions: (*a*) It acts as a surge bin to deliver as a uniform 24-hr. flow to the mill the daily mine or quarry production, which usually comes to the crushing plant and is crushed in one or two shifts. (*b*) It serves as a distributor, if necessary, to a plurality of parallel grinding units. (*c*) It acts as a mixing device to average out differences in mineralogical character of feed as drawn from different mines or different parts of the same mine.

In cement plants the process storage has similar functions (see Sec. 3*A*).

In stone-crushing plants, storage of the crushed rock is for the purpose of equalizing flow between production and shipment. Consumption and production are, in many localities, seasonal; hence storage may need to be large. Size is an important quality of product; hence sizes must be separated in storage, but segregation according to size within any one storage lot must be prevented. Ground storage (Sec. 18, Art. 5) is common because of the large tonnages involved and the fact that exposure to weather is not harmful.

Flowsheets of crushing plants for ores have been analyzed in the treatment summaries for the various metals in Sec. 2, *q.v.* Those for rock products are less well standardized and study of specific plants, with due consideration of specifications for products, is safer than generalization (see Secs. 3 and 3*A*).

Arrangement of apparatus in a crushing plant depends to a certain extent on the topography available, but principally on a few prevailing structural requirements and operating characteristics. (1) The foundations for the crushing machines should be substantially vibrationless, which means that they must be massive and rest on solid ground. (2)

Continuous transport of lumps coarser than 6-in. and passage of such material through storage is troublesome, to say the least. (3) Crushing-machine parts are both large and heavy, and replacement of wearing parts and minor repairs are necessary with relative frequency; hence adequate provision must be made for handling parts from supply room to the machines and for doing the necessary dismantling and assembly at the machine.

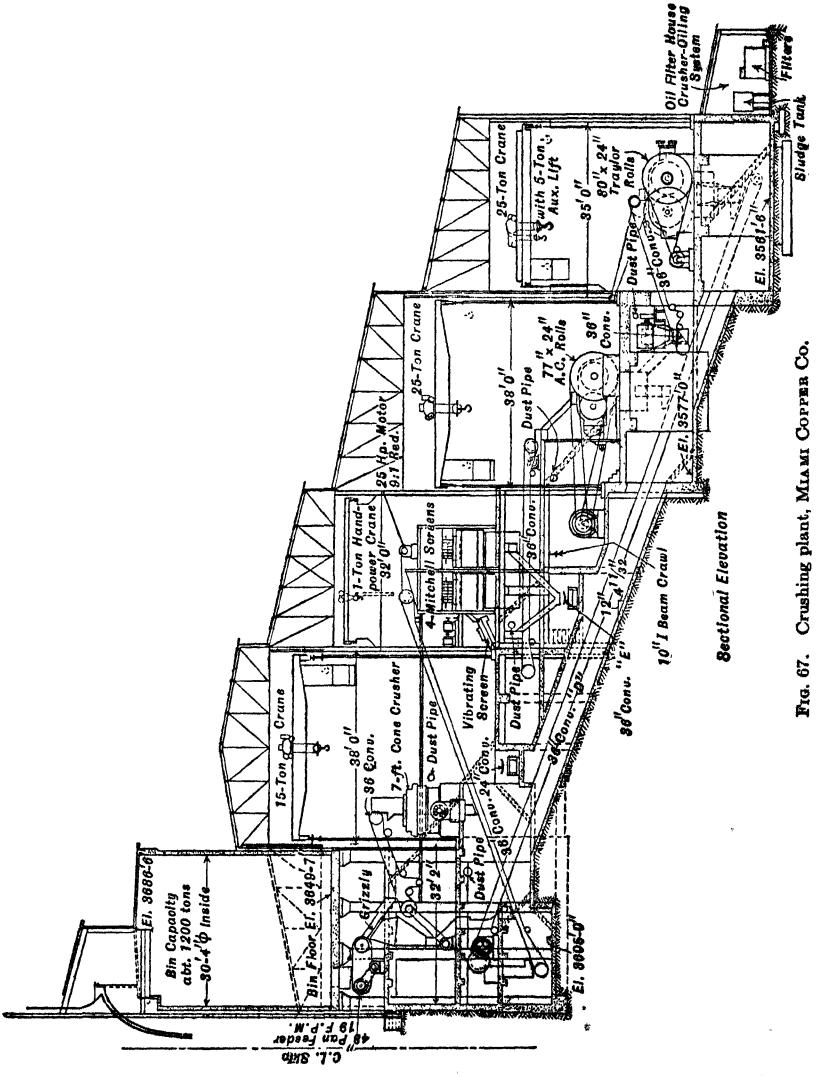

FIG. 67. Crushing plant, MIAMI COPPER Co.

(4) Constant attention is necessary only at the primary machine, but all of the heavy machinery should be at all times within the hearing and, better, within sight of an attendant. It follows, since an attendant is necessarily present at all times for the primary breaker, that if his duties at the primary machine will permit of the relatively inactive supervision demanded by the rest of the plant, it will make for operating economy to arrange the plant compactly. If, on the other hand, the plant is a large one, the machinery following the primary crusher requires more attention than can be given part-time by the primary-crusher attendant, and the plant may be spread out as much as desired, with each group of crushing machines, however, together with the accessory equipment, suffi-

ciently large to justify full-time attendance by at least one man. In such a case, since mill storage and the mill itself are frequently at a considerable distance from the point of crude delivery, it is usual to place the primary crusher at the point of crude delivery, and place the balance of the crushing plant between the primary and mill storage, with such horizontal distances intervening as will allow for necessary elevation on belt conveyors without back-tracking. Figs. 24, 26, and 27, Sec. 2, show one such arrangement. See also Sec. 3, Figs. 77 to 85. Fig. 67 shows a conveyor arrangement necessary in compact plants, or in any plant where crushing circuits are closed. Occasionally the primary crusher is placed underground; this is particularly advantageous when mining breaks the ore in large slabs,

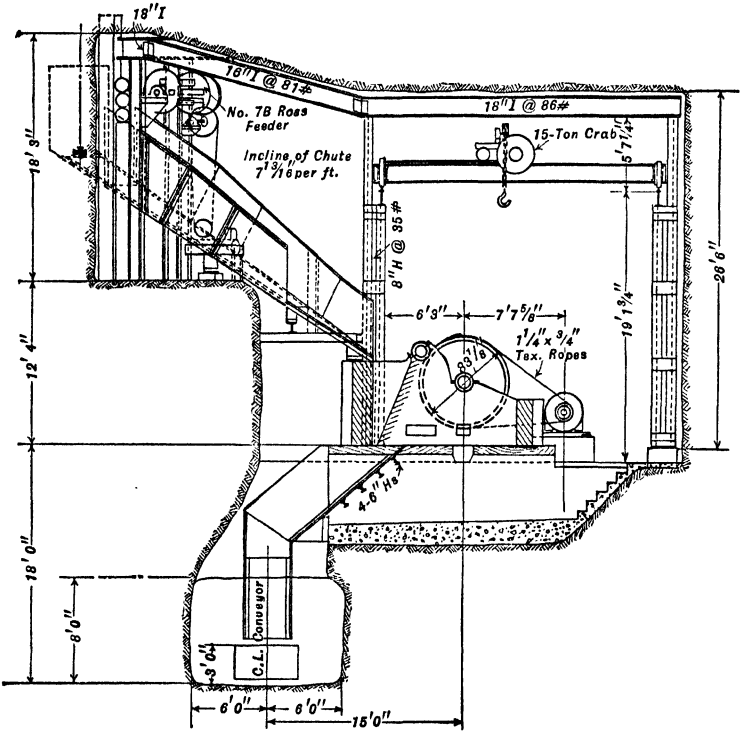

FIG. 68. Crusher station, 12th level, NORANDA MINES.

since these cause much trouble in loading skips. Underground crushers are usually of jaw type, because these sectionalize more readily than the gyratory. The arrangement shown in Fig. 68 is typical.

Lubrication. Judging by the range in consumption of lubricants reported in the several performance tables in this section, lubrication is a haphazard matter at many plants, and not impossibly inefficient at most. The basic aims of lubrication are simple; practice is largely empiricism. A LUBRICANT is a substance, usually a liquid, inserted between substantially contacting solid surfaces moving with respect to each other. It forces the surfaces apart, and substitutes its inner friction, *i.e.*, viscosity, for sliding friction between solid surfaces. It follows from its function that it must be able to penetrate, usually without application of pressure, between the surfaces; once there it must either remain or renew itself continuously, so as to maintain a film between the surfaces; and it must not corrode the surfaces that it is lubricating.

Penetration is not completely understood, but since it is invariably aided, in the case of close-fitting bearings under heavy pressures, by inclusion in the lubricant of small amounts of substances which are flotation collectors for the metals in contact, it is probable that it involves the same phenomenon of solubility wetting as occurs with oily collectors in flotation (Sec. 12, Art. 6). With crude, loose-fitting, microscopically rough bearings, penetration is largely capillarity. In either case, it is aided by low viscosity of the penetrant.

Maintenance of film in the rubbing zone is not well understood. Films that maintain themselves well under high pressures are said to have high FILM STRENGTH, but this is merely naming the phenomenon and not explaining it. High film strength is usually, but not always, associated with high viscosity and good penetrating ability. No sufficiently comprehensive correlations have been established between the chemical and physical properties of the lubricant and film strength to permit certain prediction; hence whether a lubricant has high film strength must be decided by trial in any particular case.

Viscosity of lubricants for crushing-plant machinery is important primarily from the standpoint of keeping the lubricant in the region to be lubricated. (With high-speed bearings operating under low pressures and with little power, it may be important from the standpoint of power consumption.) A lubricant with too low viscosity runs through and out of a bearing quickly and, unless provision is made for circulation, is lost. This is usually the explanation of high consumption, and, in flotation mills, of irregular work in the flotation plant, since much of the spilled lubricant appears, spasmodically, in the flotation cells.

Oil used for lubrication of all but the most unusual bearings is a petroleum fraction, its viscosity increasing, in general, with its boiling point. Many oils are, however, compounded with small amounts of animal or vegetable oil, or other organic compounds, in order to increase their penetration and film strength.

Grease is an oil that has been thickened by mixing with it finely dispersed solid soap, in much the same way that water is thickened to mud by intermixture with finely divided rock. The soaps are usually stearates, and the bases ordinarily soda or lime. Soda soaps make high-melting greases, which are, however, subject to disintegration by water, owing to solution of the soap. Lime soaps are used in soft greases; they are relatively resistant to water, but tend to separate at high temperatures. Both soaps stiffen the greases more or less in direct proportion to the soap content. The oil is, of course, the primary lubricant. Waste and other fibrous organic material serves much the same purpose as the crystalline soap structure in holding oil in place in some bearings. Both expedients are used to combat the tendency of the oil to run out of open or loose bearings as it loses viscosity with rise in temperature. Grease, however, has the added advantage of stiffening somewhat as it emerges from the bearing (and cools) and thus tends both to decrease further loss and to exclude dust and grit.

Filtering and cooling should be practiced on all oils that are circulated in crushing machines. It is almost impossible to seal grit out entirely, and the only way, therefore, to save the rubbing surfaces from acting as ultrafine grinders (with resultant wear and heat) is to filter the oil on each circuit. Cooling is not so essential except when the crusher is running continuously under heavy load, but since indirect heat exchange with water through a coil is simple and cheap, cooling after filtration is common.

Choice of a lubricant. The ultimate and, today, the only practical test for a satisfactory lubricant is a service trial. The lubricant should enable the bearing to run cool, it should not pit either of the rubbing surfaces, and it should not have an excessive cost either by way of consumption or price. If, additionally, it does not make for hard starting, that is desirable, but is, in general, relatively unimportant.

Rough correlations between certain physical properties, notably viscosity for oils, and so-called melting points for greases, and the behavior of the lubricants in certain general types of service are known to the sales engineers of the large oil companies. They usually know also the amount and kind of compounding dope that has been added, if any. On the basis of this information, and knowledge of performances in similar service elsewhere, they can ordinarily recommend a lubricant for any given crushing-plant service that will, at least, prevent burnt-out or rapidly pitted bearings. Thereafter determination of the best available lubricant for the service is a matter of trial. All of the large companies have substantially the same crude stocks available, can cut the same fractions, use fundamentally the same methods of refining and compounding, and produce, therefore, substantially the same products. They differ, consequently, as sources of supply, only in experience of the sales forces and in the price that is associated with a particular trade name. This generalization is less true of greases than of oils, since some special greases are made by processes that are secrets of particular grease compounders, but chemical and microscopic tests will normally decipher the secret in a short time, if it is worth while; whereupon the product is usually available from other sources.

Sales booklets discussing lubrication of different kinds of equipment are distributed by most of the large oil companies.

Hard-facing of all steels subject to abrasion in crushing plants is standard practice. There is a wide variety of patented alloys sold under different trade names, and having widely different properties of hardness, toughness, and ductility. Usually the principal component is iron, and chromium, manganese, and nickel are the usual alloying elements. The high-iron varieties are ordinarily tough and reasonably ductile, being thus resistant to shock, and have abrasion resistance about twice that of ordinary high-carbon steel. The low-iron alloys, consisting principally of chromium, cobalt, and tungsten, have high resistance to abrasion (3 to 10 times that of high-carbon steels) but are less shock-resistant than the high-iron types and differ greatly in this respect as between the different compositions available. Practice to date has favored the high-iron alloys for crusher parts; there has been some use of the low-iron mixtures for grizzlies, chute lips, and the like. Applica-

tion is by welding. If the under-surface volume to be replaced is large, it is first filled in to a large extent with manganese steel, and the hard-facing is then welded in on top.

The following applications are reported by a seller (*143 #6 J 66*): 125 lb. of rod used to build up a gyratory mantle at a cost of about 40% of a new mantle; little wear shown after a year of service. A mantle, 2 1/2 in. thick when new but worn thin, was built up with 90 lb. of rod in 25 hr. welding time at a cost slightly more than 25% of a new mantle; wear after 4 months (28,000 tons pyritic copper ore crushed) was 5/32 in. A large gyratory mantle from which 1,400 cu. in. had been worn was rebuilt with 250 lb. of manganese steel and hard-surfaced with 200 lb. of rod in 104 hr. Jaw plates and ball-mill liners have been reribbed in place, the latter operation involving welding on scrap steel and then hard-facing.

Operating logs. The crushing plant is more subject to delay than any other part of a milling operation. For this reason an operating log should be kept on the plant as a whole, with regular entries at reasonably frequent intervals (*e.g.*, hourly), showing essential tonnage rates at the entry times, the times of all shutdowns and start-ups, and operators' comments on causes of all variations from normal operation. Logs should also be kept for individual machines, on which are recorded the sources and nature of supplies; the dates, nature, and labor consumption in maintenance and repairs; and the amount of lost time chargeable to the machine. These are matters of recollection and guesswork in most small and many larger plants; the keeping of accurate records is frequently a hallmark of efficient operation. Forms should be kept simple, and be as brief as is consistent with recording essential information; they should be studied and digested by the supervising staff, and the fact of such consideration should be made known to the operators.

Cost of crushing and conveying ore of average hardness from steam-shovel size to <1-in. will range from 3 1/2 or 4¢ per ton in very large plants to more than double this figure in plants of 200 or 300-t.p.h. capacity; for hard rock add about 50%; for limestone, perhaps 25% may be deducted safely for the smaller plants, but it is questionable whether large plants will cut much below 3 1/2¢. Cost in a large plant for crushing from <1-in. to <10-m. will range from 4 1/2 to 6¢ per ton for average ore, including closed-circuit screening and the necessary conveying; in plants of medium size the range should be from 6 to 10¢ per ton; it may run to double these figures in small plants. Hard rock may well add 35 to 50% to the figures given; soft rock will not reduce the figures much, if at all.

Portable crushing plants are often used for small construction jobs when stone from stationary plants is not available without expensive haul. They range in elaborateness

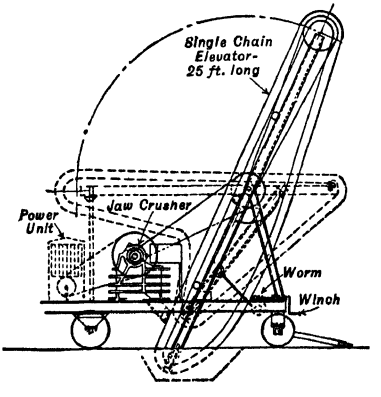

FIG. 69. Single-unit portable crushing plant

from a small crusher and drive unit mounted on a wheeled platform, to a combination consisting of primary and secondary crushing units, usually separately mounted, together with a feed conveyor, a connecting conveyor or elevator, screens, storage hoppers, and a loading elevator. The primary crusher is of jaw or gyratory type according to whether receiving capacity or production capacity predominates in desirability (see Art. 4); a secondary is almost invariably of gyratory type. Screens are normally of the simpler, low-slope, long-path vibrating type with one, two, or, rarely, three decks, mounted above the final crusher, and fed by elevator. Conveyors are usually separate units, driven from head or tail pulley as convenient, ordinarily from the crusher drive shaft. Elevators are driven at the head, usually by chain from a countershaft on the elevator frame, which is frequently

made collapsible. Drive is normally from a gasoline or Diesel-type engine, with V-belt, but steam engines mounted with boilers on a separate portable unit are not uncommon. Capacity ranges up to 15 to 45 cyd. of $^1/_2$-in. to 1 $^1/_2$-in. stone, depending upon the size of stone, for a 2-unit plant.

A simple jaw-crusher plant, without provision for feeding or sizing, but with collapsible elevator for truck delivery, is shown in Fig. 69. A two-crusher unit, mounted on one

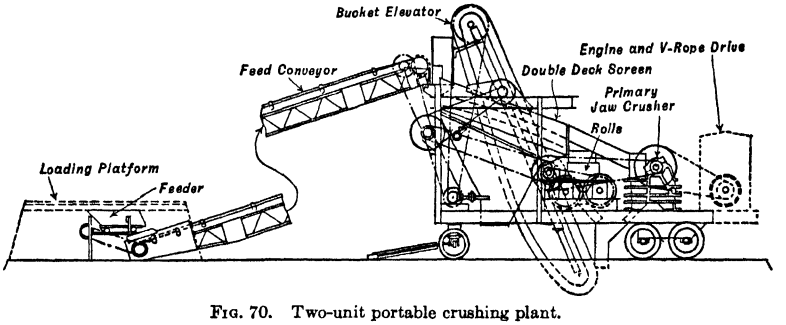

FIG. 70. Two-unit portable crushing plant.

portable base, with a double-deck screen which scalps the feed to the primary jaw crusher and closes circuit on the secondary crusher (in the form shown, rolls), is shown in Fig. 70. This outfit delivers one product only, *viz.*, undersize of the lower screen deck. This material would normally be picked up by a second conveyor or elevator and be delivered to a final screen located above a portable bin.

SECTION 5

WET GRINDING

ART.		PAGE
1.	Introduction	01
	TUMBLING MILLS	
2.	Mechanism of tumbling	03
3.	Shape of mill	10
4.	Mechanical construction	14
5.	Liners	17
6.	Tumbling media	26
7.	Rod mills	40
8.	Overflow ball mills	53
9.	Conical ball mill	61
10.	Cylindrical grate ball mills	78
11.	Tube mills	92
	OPERATION	
12.	Closed-circuit operation	97
13.	Sizes of feed and product	108
14.	Capacity	111
15.	Power	120
16.	Pulp density	123
17.	Efficiency	125
18.	Attendance and control	126
19.	Maintenance	129
20.	Cost of grinding	130
21.	Miscellaneous wet-grinding machines	130

1. INTRODUCTION

Grinding is powdering or pulverizing by pressure and abrasion. The essential element of all grinding apparatus is, therefore, a means for applying compression and shear to particles in such a way as to cause their rupture. Since fine powder is the desired product, it follows that in most cases the comminuting means must come close together in order to apply the necessary rupture forces. Hence one DEFINITION of a grinding machine is that it is a crushing machine in which the crushing elements touch except in so far as they are prevented from doing so by the material being broken (*Fahrenwald, RI 2989*). Grinding mills thus differ fundamentally from crushers (Sec. 4), in which contact of the crushing faces is prevented by the mechanism itself.

Grinding in some form or other is the only commercially practicable method of comminution available to produce material at maximum sizes of 20-m. or finer, and it is at least debatable whether it is not the economical method for production of 10-m. or even 6-m. maximum sizes (Art. 5). Limiting reduction ratio is usually large (8 to 25 : 1). On the other hand, there are unquestionably both a maximum feed size for efficient work and a maximum reduction ratio for a given type of grinding of a given maximum size of a given rock.

Definitions. Grinding is sometimes classified as COARSE GRINDING, denoting a product falling between, say, 6-m. and 20-m. maximum grain size; INTERMEDIATE GRINDING, say 28-m. maximum grain to 75% <200-m. (about 65-m. maximum); and FINE GRINDING, when the coarsest grain is 100-m. or finer. PRIMARY GRINDING is the first grinding operation to which a rock is subjected; SECONDARY and TERTIARY denote subsequent grinding stages. Grinding machines most frequently used are TUMBLING MILLS, comprising a rotating container partly filled with loose hard bodies free to move as the container revolves. Other types are ROLLER MILLS, in which heavy rolling bodies are constrained to travel a fixed circular path pressed against a track or tire; RUBBING MILLS, consisting of a heavy movable part or parts arranged to rub against a fixed surface; and STAMPS, in which a heavy mechanically actuated pestle strikes material on a fixed die in a mortar. Grinding is ordinarily continuous, but there is some batch operation, *e.g.*, barrel amalgamation and certain processing of nonmetallics to very fine sizes.

Purposes of grinding differ with the material being ground. In concentrating plants the primary purpose is severance sufficient to liberate the bulk of the valuable minerals from the gangue and, in many cases, from each other; secondarily it may be necessary to reduce the size of liberated valuable mineral sufficiently to effect differential movement in the subsequent concentration, *e.g.*, in flotation. In some nonmetallic beneficiation, grinding is practiced to satisfy market requirements, no question of separation being involved. In hydrometallurgical work, exposure of the valuable mineral to leach solution, rather than severance, is the sole purpose.

Liberation means severance of the mineral constituents of a rock. Gaudin (*PMD*) estimates, on theoretical grounds, that if a two-mineral rock in which the minerals occur

in equal-sized cubical grains, equally dispersed in equal volumetric abundance, were broken into cubical particles half the dimensions of the original grains, only one in eight (12.5%) of the resulting grains would be pure mineral, assuming no preferential breaking at the grain boundaries; breakage to $^1/_{32}$ of grain size would be required with such a rock to liberate 90%, and to $^1/_{512}$ to free substantially 100%. If the minerals are unequally abundant the same figures hold for the less abundant mineral, but the percentage of liberation of the more abundant is much larger; thus with a 10 : 1 volumetric ratio of more abundant to less abundant in the original rock, breakage to a particle size equal original grain size produces 50% liberation of the more abundant, and 90% is free at $^1/_4$ original grain size. With the less abundant comprising about 4% of the volume of the rock, corresponding to a fairly rich copper ore, liberation of more abundant is 80% when particle size equals grain size, and 92% at half-grain size.

Actually the adhesion at grain boundaries is usually less than cohesion across a surface through the grain itself; furthermore when a rock is ground to a given particle size, say that of the grain size of the less abundant mineral, 80 to 90% is finer than half-grain size, 70 to 80% is finer than quarter-grain size, and 60 to 70% finer than $^1/_{10}$-grain size. It follows that without any preferential grain-boundary cleavage, grinding a relatively rich ore to the predominating grain size of the valuable mineral will free a product in which at least 80% of the coarsest grains are free gangue, and well over 90% of all grains are free gangue, although only about 70% of all of the valuable grains would be free. Preferential boundary cleavage increases these percentages to such an extent in the usual ores as to justify the rule to grind to the prevailing grain size of the valuable mineral.

Gaudin (*ibid.*) gives photomicrographs of a number of typical mixed-sulphide grains from actual concentrates (Fig. 1). Item *a* is typical of a locked-middling grain in coarsely disseminated primary ores, and the *G* and *S* might equally well denote gangue and sulphide respectively. Items *b* and *c* are typical of secondary copper sulphides in which primary pyrite has been host for copper-bearing solutions. Particles like item *b*, in which the bulk of the particle is quartz, are also common in such ores. Item *c* is often found with galena the outer shell and pyrite or sphalerite internal. Items *d* and *e* are typical of complex primary sulphides, and of secondaries in which alteration has proceeded to the point of almost complete replacement of the pyrite host, it then comprising the internal phase. The silver-bearing gray-copper minerals also frequently thus occur as internal phase to other sulphides and to quartz.

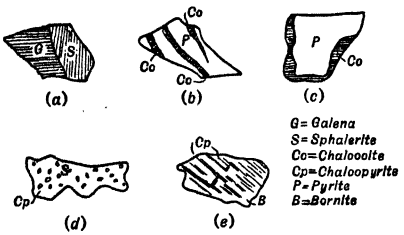

a, b, c About 100 μ.
d, e About 50 μ.

FIG. 1. Typical sulphide intergrowths (*after Gaudin*).

It is to be noted that the requirements for liberation for leaching would be satisfied completely by items *a*, *b*, and *c* and in part by item *e*, but in no way by item *d*, if the mineral to be leached were the internal phase.

While microscopic examination of polished sections of original ore and of laboratory concentration products are helpful in preliminary estimates of the extent of grind necessary for effective liberation, final determination of the economic optimum is a matter of plant experiment in which the variables are extent of grind, mill recovery, grade of concentrate, operating cost, and smelter schedule.

Production of surface is an important element in the grinding of most nonmetallic minerals, for the reason that the purpose of grinding in such cases is to prepare the material for uses in which chemical reaction of some kind is involved.

Character of product is more important in concentrating plants than either high efficiency or low cost. An overground product, whether treated by gravity or flotation, will usually cost more in tailing loss than it is possible to save by efficient grinding operation. Overgrinding does no harm in cyanidation unless it results in preventable waste of power and steel. An incompletely liberated or exposed product usually results in high tailing and may at the same time produce low-grade concentrate.

Mechanism of fine comminution. The size characteristics of broken rock particles are determined, other things being equal, by the way in which the particle broken was loaded, and by the degree of hindrance offered to egress from the breaking zone. In general, shear loading (ABRASION) is more productive of fines than loading a particle as a short column; impact produces more fines than gradual loading; and the greater the hindrance to egress, the finer the product. Hence grinding machines are designed to strike the particles to be ground sudden, hard blows, and/or to cause them to be rubbed with considerable pressure against each other and against hard surfaces; also some device is always used to hinder escape of unground material from the grinding zone. The nature of the expedients used to

effect these ends determines the type of machine. Since the particles to be broken are relatively small, of highly varied size, and substantially infinite in number, it is not feasible to lead them through a restricted crushing zone, as in coarse and intermediate crushers, with the certainty that all will be reduced to some predetermined maximum thickness. Hence repetitive chance is called upon to effect presentation to the crushing surfaces. Two methods are employed. In tumbling mills the entering stream of pulp is broken up into a large number of small branches and is thus led relatively rapidly over a crushing surface of large extent. In roller and rubbing mills the crushing surface, on the other hand, is of relatively small area, and repetition is had either by repeated circulation or by tremendously slow travel. Hindrance to egress is effected by a screen or by a weir. In all cases the crushing surfaces alternately approach to and recede from each other; this motion is positively controlled and is substantially regular and uniform in the roller and rubbing mills, but less regular and definitely nonuniform in tumbling mills.

Capacity depends, in all types, upon the force exerted between the crushing surfaces and upon the proportion of time that the particles are in active crushing zones.

TUMBLING MILLS

Tumbling mills are used for grinding in substantially all concentrating and leaching plants and in many plants processing nonmetallic minerals. Operation is universally wet in the former group, but is frequently dry in the latter. Use of a sizing device to guard the product is usual, the exceptions being those cases in which the product is to be ground further (primary mills), and occasional remnants of old practice, *e.g.*, in some cement mills, where the circuit is guarded by prolongation of the mill shell.

Classification of tumbling mills. In the majority of tumbling mills the rotating container is a cylinder mounted with axis horizontal, and provided with openings through the heads for feed and discharge of material respectively. Differentiation is on the basis of tumbling bodies, shell proportions, and method of discharge. In ROD MILLS the tumbling bodies are steel rods; in BALL MILLS, cast-iron or steel balls; in PEBBLE MILLS, pebbles of hard rock or other nonmetallic material, *e.g.*, porcelain. The name BALL MILL usually further connotes a shell of which the length is not ordinarily more than twice the diameter. TUBE MILLS have the shell length two or more times the diameter; they may be loaded with either balls or pebbles or a mixture of the two. CONICAL MILLS have a cylindro-conical shell and utilize either ball or pebble loading.

Manufacturers of tumbling mills. Allis-Chalmers Mfg. Co., Chalmers & Williams, Denver Equipment Co., Eimco Corp., Hardinge Co., Hassel Eng'g Co., Joshua Hendy Iron Wks., Mine & Smelter Supply Co., Morse Bros. Machinery Co., Patterson Foundry & Machine Co., Straub Mfg. Co., Traylor Eng'g and Mfg. Co., Worthington Pump & Machinery Corp.

2. MECHANISM OF TUMBLING

Introduction. The tumbling mill has greater over-all variability than any other apparatus used in ore milling with the possible exception of the flotation machine. It varies not only in size, but in the proportions and the outer and inner conformations of the shell; the tumbling bodies differ in shape, size, in individual and total weights, and in hardness, throughout tremendous ranges; the motions of the tumbling media, determined by their shapes, by the conformations of the shell, and by its diameter and speed, differ not only in degree but in kind with changes in the controlling variables; the total time that the material to be ground is under action and the degree of continuity of that time are operating variables, as is also the state in which such particles are subjected to the mill action. Each and every one of these variables affects the result obtained on a given material, and change in material itself effects fundamental changes in such results. In consequence, analysis of the performance of a given mill under given conditions is difficult and debatable, while prediction, even by experienced and skilled workers, is largely a matter of hope. Fortunately, informed integration of averages of actual past operations will bracket the ordinary new situation sufficiently closely to insure a reasonable approximation to the desired result. In such an integration the designer will do well to avail himself of the services of the engineering staffs not only of the tumbling-mill manufacturers, but also of those of the sellers of the accessory equipment of the grinding circuit.

Motion of the tumbling bodies in a rotating shell was first identified experimentally by Haultain and Dyer (*25 CMI 651*). They took moving pictures of short rods with striped ends contained in a short glass-ended cylinder. The motion comprises two distinct vari-

eties, (1) rotation of the rods around their own axes lying parallel to the mill axis, and (2) CASCADING (rolling down the surface of the load) or CATARACTING (parabolic free fall above the mass). These motions of rods and the similar motions of balls have been confirmed by many later observers

Cataracting. Fig. 2 is an idealized representation of the action in a mill operating at a speed to cause cataracting. In the lower part of the mill balls are in irregular layers concentric with the mill shell. The layer in contact with the shell itself is moving at substantially the same rate as the shell; the rougher the mill lining the less the slip. Any ball in this layer, between lines *a–a* and *b–b*, is subject to two sets of forces, one applied at the point of contact with the mill shell, in a direction tangent to the shell and (in Fig. 2) counterclockwise; the other applied on the opposite side of the ball and oppositely directed. This pair of forces acting on any one ball constitutes a couple and, since the ball is constrained by contact with the shell and with its neighbors, it rotates around an axis perpendicular to the plane of the couple, *i.e.*, parallel to the mill axis. The balls in the adjacent layer are similarly acted upon and similarly rotate, and every ball in the zone between *a–a* and *b–b* has similar rotation under the action of similar couples. This motion of individual balls is shown in Fig. 3. The result is sliding of contacting surfaces across each other under pressures dependent upon their depth in the mass. Particles nipped and passed between are ground by abrasion.

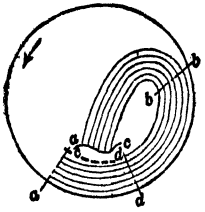

FIG. 2. Ball paths in cataracting.

In the zone from *b–b* to *a–a*, reckoning counterclockwise, in a mill operating at cataracting speeds, there is substantial free fall of balls out of contact with each other and no grinding or breaking action whatever. At the surface *c–c* there is crushing by impact between the falling balls and the balls below this surface, which are supported by the mill shell. In the zone *a–a*, *c–c*, *d–d* there is most intense and turbulent motion, appearing, in the moving pictures, to consist of violent tumbling in the region above the heavy dotted line and rapid shear of the mass along the dotted line with the portion of the balls below the line moving rapidly with the mill shell and those above appearing, as a mass, to be stationary, although each individual in this mass is in rapid movement with respect to its neighbors. Haultain and Dyer describe the zone *a–a*, *c–c*, *d–d* as the TOE; it is apparently the most active region in the mill and is probably the place where the most reduction of coarser particles is done.

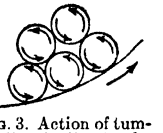
FIG. 3. Action of tumbling bodies in the layers adjacent to the shell of a mill.

Mathematical analysis. Davis (*61 A 250*) gives an exhaustive mathematical analysis of the action in a ball mill operated at cataracting speed. A summary of his conclusions follows:

Notation: (See Fig. 4) r = radius in ft., drawn to any particle p at the instant that its path changes from circular, under the impulse of the mill shell, to parabolic under the influence of its acquired momentum and gravity, or *vice versa*. r_1 = radius of mill drawn to the point where the outer layer of balls changes from circular to parabolic motion or *vice versa*. r_2 = radius to the point of motion change of the inner layer of that part of the charge which, at any given instant, is following a circular path. R = radius of gyration of charge near line *aO*. α = angle in degrees between vertical and radius r drawn to the point of change from circular to parabolic motion. α_1 = angle between vertical and the corresponding radius r_1. α_2 = angle between vertical and the corresponding radius r_2. α_R = angle between vertical and R. β = angle between horizontal and the radius r drawn to the point of change from parabolic to circular motion. β_1 = angle between horizontal and corresponding radius r_1. β_2 = angle between horizontal and corresponding radius r_2. n = speed of mill in r.p.s. N = speed of mill in r.p.m. N_1 = critical speed of mill in r.p.m. V_b = velocity of particle relative to striking point. w = weight of any given portion of charge, *e.g.*, one ball, in lb. W = weight of entire charge in lb. P = fraction of mill volume occupied by charge (voids included). g = acceleration due to gravity = 32.2 ft. per sec. per sec. k = a constant for any given mill speed = $4\pi^2n^2/g = 1.226n^2$. K = a constant = r_2/r_1. H = height of charge in mill at rest, in ft. E = Kinetic energy in ft.-lb. T = time for a ball to complete one cycle, in sec. T_r = time for one rev. of mill, in sec. C_n = cycles of ball travel per rev. r_c = radius of circular arc *aO* along which change from circular to parabolic motion occurs. x, y, See Fig. 4.

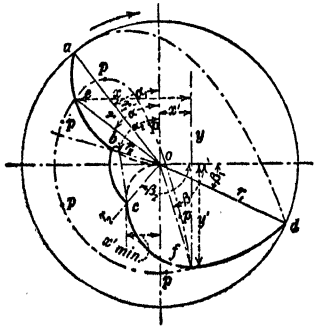

FIG. 4. Theoretical ball paths.

Equations:

$$\cos\alpha = kr = 1.226rn^2, \quad (1) \qquad r_c = \frac{0.408}{n^2}, \quad (2)$$

$$\cos\alpha_R = 0.867r_1n^2\sqrt{1+K^2}, \quad (3) \qquad N_1 = \frac{54.19}{\sqrt{r_1}}, \quad (4)$$

$$y = x\tan\alpha - \frac{0.613n^2x^2}{\cos^4\alpha}, \quad (5) \qquad \beta = 3\alpha - 90°, \quad (6)$$

$$V_b^2 = 16rg\cos\alpha\sin^4\alpha. \quad (7)$$

For the best theoretical efficiency

$$V_{b\,max.} = \frac{7.88}{n}, \quad (8) \qquad V_{b\,min.} = \sqrt{16Kr_1g\cos\alpha_2\sin^4\alpha_2}, \quad (9)$$

$$\alpha_R = 54°\,44', \quad (10) \qquad K = \sqrt{\frac{0.443}{r_1^2n^4}} - 1, \quad (11)$$

$$N = \frac{48.95}{\sqrt{r_1}\sqrt[4]{1+K^2}}, \quad (12) \qquad \cos\alpha = \frac{0.8165r}{r_1\sqrt{1+K^2}}, \quad (13)$$

$$\cos\alpha_1 = \frac{0.8165}{\sqrt{1+K^2}}, \quad (14) \qquad \cos\alpha_2 = K\cos\alpha_1, \quad (15)$$

$C_n = \frac{T_r}{T} = 1.444$ (considering all balls to have the same cycle as if their radius of revolution were the radius of gyration). (16)

$K = -0.024 + 0.39\sqrt{7 - 10P}$ (very nearly), (17)

$$HP = Wr_1^{3/2}\left[0.004467\frac{1-K^3}{(1+K^2)^{1/6}} - 0.0037\frac{1-K^5}{(1+K^2)^{3/6}} + 0.00088\frac{1-K^7}{(1+K^2)^{5/6}}\right] \quad (18)$$

$$r_2 = Kr_1 \quad (19)$$

Examples of application of Davis' equations. An 8×6-ft. cylindrical mill charged with 28,000 lb. of steel balls. Assuming 35% of voids in the ball charge, the weight per cu. ft. of charge is 325 lb. and the volume of the charge, 28,000/325 = 86 cu. ft. The interior volume of a 8×6-ft. mill is 301 cu. ft. (according to Davis. This figure is based on the assumption of 8×6-ft. inside. The actual internal volume of an 8×6-ft. mill is probably 20% less than this on account of the space occupied by the liners), hence the charge occupies 86/301 = 28.6% of volume = P. Then from Eq. 17, K = 0.770; from Eq. 12, the best speed = N = 21.8 r.p.m.; and from Eq. 18, HP = 153. (This is low for an 8×6-ft. mill.) If 8,000 to 10,000 lb. is added for the weight of the pulp and W is made the total load in mill = 36,000 to 38,000 lb., HP becomes 197 to 208, which is about correct (see Table 30). From Eq. 14, α_1 = 49° 30′ and from Eq. 15, α_2 = 60° 20′. From Eq. 19, r_2 = 3.05 ft. By Eq. 6, β_1 = 58° 30′ and β_2 = 91°. Values of r for values of α between α_1 and α_2 may be obtained from Eq. 1 and for values of β between β_1 and β_2 from Eqs. 6 and 1. By plotting these values, curves a–b and c–d in Fig. 4 may be obtained. Then the concentric circular arcs represent the circular paths of the balls and the parabolas the free-moving paths. The value of r for the start and finish of any particle on its parabolic path is the same. The equation of the parabolic path of any given particle, taking its point of starting on the parabolic path as origin of co-ordinates, is given by Eq. 5. Thus the complete theoretical path of the ball charge can be plotted in a chart similar to Fig. 2.

Haultain and Dyer (*69 A 198*) question Davis' conclusions as to ball paths on the basis of their pictures, but Davis' discussion of their results confirms his original conclusions. Fig. 5 shows five different conditions of operation graphically summarized by Davis from the films. The dash lines in the figures are the theoretical paths. The lines carrying round black dots represent actual paths of individual balls as traced from the films. In Figs. 5*a* and 5*d* departure of the actual paths from the theoretical is greatest. In these operations balls and water only were present, and the discrepancy is due to slip between ball load and lining, amounting to 8 to 10%, resulting in failure to carry balls to their full theoretical height. This slip eliminated practically all free fall in Fig. 5*a*, and materially decreased the amount of free fall in Fig. 5*d*. But in Figs. 5*c* and 5*e* sand (corresponding to ore) was present, slip was practically zero, and the actual paths approximated the theoretical very closely.

Gow *et al.* (*87 A 51*) ran a 36×6-in. squirrel cage (screen ends) with ball charges ranging from 10 to 50% at various speeds without ore or water. With a 10% charge, slip was so high that there was neither cataracting nor centrifuging at any speed. At 20% load there was some cataracting at speeds near critical (Eq. 4) but no centrifuging at the critical; the cataracting balls fell on the toe. At 30% load a good toe formed; cataracting occurred in the higher speed range and the outer balls were thrown to

the breast above the toe; there was no centrifuging at critical speed. At 40% load the outer balls centrifuged at critical speed, which the authors interpreted to signify cessation of slip; the cataracting balls hit the toe up to 75% critical. At 50% load the trajectories of the balls were flatter than for smaller loads at given speeds, which was attributed to overcrowding. Trajectories at all speeds were broader than those derived by the Davis formula, which the authors asserted to be due to continued pushing of balls after they leave the shell by those behind, such pushing continuing to the top of the ball path. They offered the following formula, attributed to Dean and Kidd, as representing ball path from shell to apex, the origin of rectangular co-ordinates being taken at the point at which the ball leaves the shell:

$$y = \frac{2.3V^2}{g}\left[\log \frac{\cos\beta - \frac{57.3gx}{V^2}}{\cos\beta}\right]$$

in which V = constant velocity along curve in ft. per min. = peripheral velocity of mill or ball layer, β = slope of tangent to curve at point x,y in degrees (α, of Davis), and g = 32.2 ft. per sec. per sec.

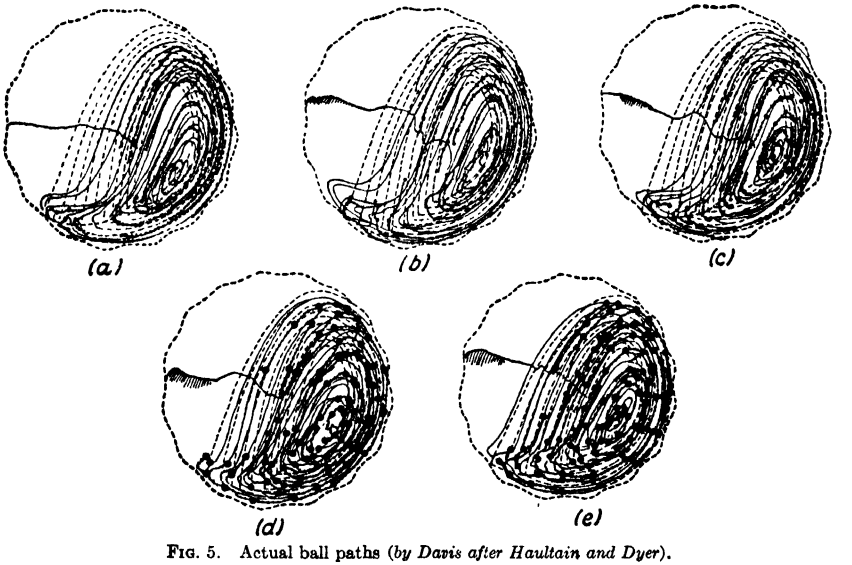

FIG. 5. Actual ball paths (*by Davis after Haultain and Dyer*).

Haultain and Dyer (*12 MMt 108*), by further moving pictures showing the differences in paths in squirrel-cage and glass-ended short mills, confirm the criticism by Davis in the discussion of the Gow *et al.* paper that the 1 1/4-balls used in the squirrel cage were keyed in, due to the short length and coarse screens (1-in. mesh), to such an extent that they carried beyond the normal departure points and were thus given greater-than-normal horizontal components of velocity. The weight of the evidence as to cataracting ball paths would seem to be in favor of the Davis analysis.

Cascading has not been thoroughly analyzed in the literature, despite that many tumbling mills nowadays run at substantially cascading speeds. The photographs of Gow *et al.* indicate, however, that in cascading, the branch *bb–cc* of the ball path in Fig. 2 simply collapses onto the upcoming layer, forming a small oval turbulent core in the upwardly concave part of the idealized void in the ball mass there pictured, over which the balls of the downcoming layer move as an avalanche. White (*87A 81*) states that with a 50% ball load the kinetic repose angles of the mill charge at various speeds are, approximately: 10% critical, 38°; 20%, 44°; 30%, 48°. The drawings of Gow *et al.* indicate rather higher values, with a definite drop in value for any speed with decreasing ball load (or smooth liner).

The toe persists in a cascading load. Observers report that while in cataracting the larger balls concentrate in and near the central void, in cascading they run out across the toe and tend to come up as the outer layer and thus form the surface of the avalanche.

Speed. The form of the inner surface of the liner, and the character of the pulp conjointly determine the character of the movement of the tumbling bodies in a mill of a given diameter. For a mill with a smooth liner, a single tumbling body should just cling throughout the revolution when the relationship between its distance from the mill axis and the mill speed are as given in Eq. 4, p. 05. This theoretical cling speed, taking r as the nominal

Table 1. Speed *vs.* performance in 2×2-ft. open-circuit continuous ball mill *b* (Data from Gow *et al. 112 A 24*)

	Flint					Dolomite					
Speed, % critical	42	52	62	72	82	32	42	52	62	72	82
Feed rate, tons per hr. *a*	0.20	0.26	0.34	0.41	0.44	0.42	0.61	0.80	1.00	1.21	1.33
Power consumed, hp	1.05	1.33	1.71	2.02	2.21	0.68	1.01	1.33	1.65	1.95	2.12
Tons produced per hr.:											
<8-m. *c*	0.003	0.004	0.005	0.006	0.007	0.003	0.004	0.006	0.007	0.008	0.011
<10-m.	0.044	0.058	0.075	0.089	0.096	0.053	0.079	0.105	0.129	0.151	0.154
<20-m.	0.114	0.146	0.186	0.215	0.226	0.220	0.329	0.409	0.492	0.556	0.529
<35-m.	0.094	0.118	0.148	0.164	0.170	0.176	0.263	0.312	0.368	0.448	0.383
<65-m.	0.061	0.075	0.095	0.103	0.108	0.124	0.185	0.216	0.251	0.320	0.268
<200-m.	0.026	0.033	0.041	0.043	0.045	0.066	0.095	0.118	0.135	0.154	0.150
Tons produced per hp-hr.:											
<8-m.	0.003	0.003	0.003	0.003	0.003	0.004	0.004	0.005	0.004	0.004	0.005
<10-m.	0.042	0.044	0.044	0.044	0.043	0.078	0.078	0.079	0.078	0.078	0.073
<20-m.	0.109	0.110	0.109	0.106	0.102	0.324	0.326	0.308	0.296	0.285	0.250
<35-m.	0.090	0.089	0.087	0.081	0.077	0.259	0.261	0.235	0.223	0.230	0.181
<65-m.	0.058	0.056	0.056	0.051	0.049	0.182	0.183	0.164	0.152	0.164	0.126
<200-m.	0.025	0.025	0.024	0.021	0.020	0.097	0.094	0.089	0.082	0.079	0.071
Reduction ratio, 80%	2.1	2.1	2.0	2.0	1.9	1.6	1.7	1.6	1.5	1.5	1.4
Reduction tons per hr.	0.42	0.55	0.68	0.82	0.84	0.67	1.04	1.28	1.50	1.82	1.86
Reduction tons per hp-hr.	0.40	0.41	0.40	0.41	0.38	0.99	1.03	0.96	0.91	0.93	0.88
Surface tons per hp-hr. (65-m. useful)	12.7	12.6	12.2	11.6	11.1	37.6	37.8	34.1	32.6	31.1	27.0
Surface tons per hp-hr. (200-m. useful)	24.0	23.8	23.1	21.3	21.1	77.6	78.6	70.2	66.2	57.9	56.0

a Apportioned to power draft to maintain 0.2 ton per hp-hr. for flint and 0.6 for dolomite. Pulp density: 60% solids for flint; 70% for dolomite.
b Ball charge: 2 1/2-in. maximum, ranging down to 3/4-in.; ball volume, 40%. *c* 6-m. limiting feed screen.

Table 2. Effects of speed, ball volume, and length of shell on performance of a 6 1/2-ft. low-discharge ball mill at Hollinger (*40 CIMM 94*)

Test no.	Mill length, ft.	Speed		Ball load, in. above (+) or below (−) center *a*	Tons new feed per hr.	Circulating load, %	Tons mill discharge per min.	Solids, %	Approx. min. per pass	Hp. consumed	Sizing				Performance	
		R.p.m.	% of critical								Feed		Product		Tons new feed per hp-hr.	Tons <200-m. produced per hp-hr.
											>3-m.	<200-m.	>48-m.	<200-m.		
1	7 1/4	27.7	91.0	0	16.6	.....	.....	80.0	.....	164	3.5	15.9	1.6	67.4	0.101	0.052
2	7 1/4	27.7	91.0	−6	27.0	490	2.66	80.3	0.28	238	3.4	12.6	1.4	65.5	0.113	0.060
3	7 1/4	24.6	81.0	+6	25.0	.....	.....	78.5	.....	209	2.8	18.0	4.1	66.6	0.119	0.058
4	7 1/4	24.6	81.0	0	29.2	454	2.70	81.4	0.29	231	3.7	15.3	3.2	67.5	0.126	0.066
5	7 1/4	24.6	81.0	−6	26.4	516	2.72	80.7	0.28	210	4.3	15.5	2.0	66.3	0.130	0.066
6	7 1/4	22.0	72.4	+6	25.8	361	1.98	81.1	0.39	204	4.0	16.1	2.2	68.1	0.126	0.066
7	7 1/4	22.0	72.4	0	26.6	478	2.56	80.6	0.30	214	3.3	15.4	2.1	66.5	0.124	0.063
8	14 1/2	24.9	82.3	0	54.5	475	5.23	80.8	0.29	(390) *b*	3.2	.....	2.4	66.2	(0.140)	(0.071)

a Seasoned load; 3-in. renewals; forged steel; smooth liners, no lifters. *b* Estimated from Table 5.

inside radius of the lining, is called the CRITICAL SPEED. In normal practice mills are run at 50 to 90% of this critical speed, depending upon the shape of tumbling body, volume of charge, shape of liner, and the type of action desired in the tumbling mass.

Speed *vs.* performance. Laboratory tests in a small ball mill (see Table 1) indicate a continuous increase in capacity with increase in speed over the range of 42 to 72% of critical for both very hard and relatively soft ores, with a further increase at 82% for the harder ore. Efficiency, on the other hand, shows a somewhat indefinite peak in the range between 40 and 50% of critical. There is no break in capacity marking the change from cascading to cataracting which, judging from the photographs presented, took place between 52 and 62% of critical. This is, however, the range in which efficiency began to drop; more for dolomite than for chert. The change is accompanied by a distinct swelling or loosening of the charge, principally in the down-going stream.

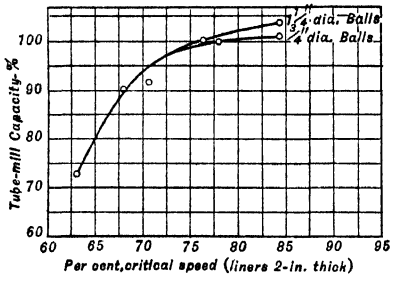

FIG. 6. Speed *vs.* capacity in a 5×16-ft. tube mill at LAKE SHORE.

Results of speed tests on a 5×16-ft. tube mill at LAKE SHORE (*LSS*) are given in Fig. 6. It is to be noted that the small gain in capacity with 3/4-in. balls in going from 77.6% of critical (27.5 r.p.m.) to 84.7% of critical (30 r.p.m.) was accompanied by an increase of 10% in power consumption. At HOLLINGER it was early decided on the basis of plant test work that 80% of critical was the best speed for a 7×6-ft. primary ball mill and for 6×16-ft. and 4×16-ft. tube mills. Table 2 presents data on later tests on a 6 1/2×7 1/4-ft. ball mill in which it is indicated (tests 2 and 5) that 81% speed is about 10 to 15% superior to 91% critical in efficiency while as between 81 and 72% (tests 4 and 7), the capacity at the higher speed is about 10% higher and the power increase slightly less, so that again there is a slightly better efficiency shown at the 81% speed.

Recommended speeds. MINE AND SMELTER SUPPLY CO. (*40 CIMM 328; PC*) recommend 75 to 78% of critical for low-level ball mills operating with wave liners. Johnson (*ibid.*) points out that 85% of critical is maximum for feeder-tip speed; above this feeders will not load properly, and at this speed there is considerable splash in the feed box. ALLIS-CHALMERS (*F. C. Bond, PC*) recommend the equation $N_o = 57 - 40 \log D$, where N_o is best operating speed and D is internal diam. of mill in ft. See also tables of manufacturer's data, Art. 7 to 11. Chenhall (*6 CIE*) states that in Cornwall mills the formula $N_B = K/\sqrt{d}$ is used, where N_B = best r.p.m., d = internal diam., in.; and K is 200 for a pebble charge with smooth liner and 183 for a ribbed liner, and 217 and 198 respectively for a ball charge. Thompson (M. & S. S. Co., *PC*) states that a peripheral speed of 300 to 330 f.p.m. appears to give the best rod action.

Except in highly competitive sales the manufacturer recommends speeds that are below those giving maximum capacity; the customer then has relatively low steel consumption, and when the almost inevitable demand for increased capacity arises can be told to increase speed and gain the capacity without loss in tons per hp-hr.

At FALCONBRIDGE NICKEL (HARDINGE CO., *PC*) an 8-ft. × 36-in. conical ball mill with wedge-bar liners and ball charge of about 16 tons was operated in closed circuit at 19.05, 21.3, and 22.0 r.p.m., corresponding to 68.3, 76.4, and 79.0% of critical, respectively. Corresponding power consumptions were 142, 148, and 160 hp. Capacities on <1/4-in. feed to 10% >48-m. product were 290, 310, and 335 tons per 24 hr., respectively, and the corresponding tons per hp-hr. were 0.085, 0.087, and 0.087. At KERR ADDISON (HARDINGE CO., *PC*) a 10-ft.×72-in. conical ball mill with wedge-bar liner and 38-ton load was operated at 19.8 and 21.8 r.p.m. (80 and 88% critical) in closed circuit with a 12×25 1/2-ft. Dorr DFX classifier. Power drafts were 462 and 492 hp. Capacities on hard, siliceous ore were 750 and 730 tons respectively reducing <3/4-in. feed to a nominal 48 *mog*, but the >65-m. was only 7.2% for the slower mill as against 10.1% for the faster, and the <200-m. quantities were 61.2% and 54.1% in the same order. Thus the slower mill consumed 14.8 hp-hr. per ton of feed and 27.8 hp-hr. per ton of <200-m. produced as against 16.2 and 34.5 hp-hr. respectively for the faster mill. The FALCONBRIDGE figures show a pick-up of 15% in capacity with no appreciable sacrifice of efficiency by increasing speed up to 79% of critical; the KERR ADDISON figures, on the other hand, indicate that the optimum speed has been passed. At AJO (*C. F. Thompson, PC*) increase in speed of 7-ft. rod mills from 17 to 23.1 r.p.m. increased capacity 43.4% with 9.7% decrease in hp-hr. per ton. (Conversion to a ball charge gave a further increase in capacity, maintaining the same power consumption per ton ground.)

Table 3 summarizes practice as to speed for 172 installations reported over a period of 20 yr. The clustering of ball-mill speeds above 70% of critical speed and of those for rod mills in the range from 50 to 60% is marked. If it is assumed, as is asserted by Gow *et al.*, that their 2×2-ft. laboratory-mill results are an accurate reflection of the performances of large mills, ball-mill practice is, definitely, to sacrifice efficiency to capacity. Rod-mill practice, on the other hand, is predominantly in the cascading range. Recent work (Art. 7), however, has shown that rod mills can be run at speeds above the nominal critical without tangling the rods or hammering out the linings, and that at such speeds they are

serious competitors of rolls in preparation of fine ball-mill feed. Pebble-mill speeds are, in general, higher than those of ball mills.

Table 3. Speeds of tumbling mills in practice

Type of mill	Circuit *a*	Speed, % of critical speed															
		<50		50–54		55–59		60–64		65–69		70–74		75–79		80–95	
		No.	%	No.	%	No.	%	No.	%	No.	%	No.	%	No.	%	No.	%
Ball	O-P	0	0	0	0	1	5.0	1	5.0	4	20.0	3	15.0	5	25.0	6	30.0
Do.	C-P	0	0	2	2.7	3	4.1	3	4.1	8	10.9	17	23.3	24	33.0	16	21.9
Do.	C-S	0	0	0	0	2	4.3	3	6.5	7	15.2	7	15.2	9	19.6	18	39.2
Do.	C-T	0	0	1	14.3	0	0	1	14.3	2	28.6	0	0	1	14.3	2	28.6
Do.	All closed	0	0	3	2.4	5	4.0	7	5.6	17	13.5	24	19.1	34	26.9	36	28.5
Do.	All	0	0	3	2.1	6	4.1	8	5.5	21	14.4	27	18.5	39	26.7	42	28.7
Rod	O	0	0	0	0	7	43.8	2	12.5	5 *b*	31.3	1	6.2	1 *b*	6.2	0	0
Do.	C	1	6.2	8	50.0	5	31.3	1	6.2	0	0	1	6.2	0	0	0	0
Do.	All	1	3.1	8	25.0	12	37.5	3	9.4	5 *b*	15.6	2	6.2	1 *b*	3.1	0	0

a O = Open-circuit; C = closed-circuit; P = primary stage; S = secondary stage; T = tertiary stage.

b All but one of these of small diameter (3- and 4-ft.) and early installations.

Low ball-mill speeds are sometimes employed as an economy when full mill capacity cannot be utilized. Coghill and deVaney assert (*CEG*) that ball action is better than rod action at very low speeds

Very high ball-mill speeds, which cause the outer layers of the load to be thrown clear of the toe and against the down-going breast of the mill, waste the impact of the bodies thus thrown and cause excessive consumption of steel. It is the consensus of operators that high speed increases capacity in coarse grinding and that lower speeds are better for fine grinding, but the statistical showing of Table 2 does not reflect action on this opinion. One large manufacturer recommended a drop in speed of approximately 10% about 1930 (*87 A 75*).

Variable speed to suit tonnages available and change in mill diam. with liner wear is definitely indicated. On the other hand, the only method presently available for speed variation is to use a d.-c. motor. This is not economical.

Particle loading. It follows from the discussion of tumbling action (p. 03) that at all operating speeds the particles in the interstices of the upcoming grinding media will be subjected to a rubbing pinch somewhat analogous to that in a set of rolls running with only one belt. At cataracting speeds the work done by the downcoming media is hammering against the balls of the toe and/or against the downcoming breast of the mill, plus a contribution to avalanche action (p. 10) in the toe. At cascading speeds the work of the downcoming stream is all avalanche action.

Rubbing, to be effective, requires that the particle be held relatively stationary with respect to the rubbing surface, *i.e.*, it must be nipped. The requisite angle of nip is the same as that for rolls (Sec. 4, Art. 8). Hence, on the face of the matter, there should be some relationship between diameter of tumbling body and particle to be broken. But the tumbling bodies are not constrained to the extent that rolls are; rather they can and do move apart to an extent dependent upon the superincumbent pressure, the size of the interstitial rock particles, and the resistance of these to breaking. Hence nip-angle calculations as a basis for determination of proper size of medium have no significance except as to the smaller rock particles, which have insufficient strength to withstand the pressures available (see Art. 3).

Hammering, or impact loading, generates stresses which, because of suddenness, are much larger than would be expected from the weight of the falling body (Sec. 4, Art. 9). This action is depended upon for crushing the larger rock particles. Its effectiveness, so far as an individual blow is concerned, increases with the inertia of the body struck. Hence a rock particle struck by a ball in the air suffers but little internal stress; one resting on or in a mass of pulp suffers but little more; but those which are backed by the media in the toe or by the shell become more or less fully loaded according to their ability to adjust position to the supporting and loading surfaces.

Utilization of hammering is aided in a mill operating at cataracting speeds by the fact that such action loosens and swells the load sufficiently to permit the larger bodies to work to the surface (see Sec. 11, Art. 15). Gow *et al.* report concentration of the large balls in the turbulent core at the surface of the upcoming stream, and increasing penetration of fine sand to the shell. Concomitant concentration of coarse rock at the surface of the tumbling load has been commented on by other observers.

Hence the same operating change that produces cataracting of the tumbling bodies, *viz.*, increase in speed, also serves to concentrate the larger particles at the surface of the toe, where they are struck while effectively backed.

Avalanche loading is a combination of rubbing and hammering, *i.e.*, both occur. The cascading bodies in each layer of the downcoming stream are retarded at their lower surfaces because of the slower down-slope flow of the underlying layer, which, in turn, is due to the drag transmitted from the upper surface of the upcoming stream. Conversely, the upper surfaces of all but the upper layer of downcoming bodies is subject to an accelerating force from the overlying layer. The result is a couple tending to cause rotation of the body around a more or less horizontal axis. Any differential motion between touching bodies thus engendered causes rubbing.

At the same time the bodies in the same layer are intermittently in and out of contact as they roll over the irregular surface of the underlying layer. As they make contact they exert impact stresses on intervening rock particles of a magnitude dependent upon the downsurging individual mass and the relative velocities of the striking and struck bodies. Data are not available for quantification of the forces, but their relative ineffectiveness as compared with free-falling bodies may be judged from the fact that a given load cascading will not reduce coarse feed particles as rapidly as the same load cataracting. If the same feed rate is maintained, the coarser particles in the discharge from the cascading mill come out rounded, indicating insufficient loading to break across them.

Cascading *vs.* cataracting. Gow *et al.* (*112 A 24*) ran parallel laboratory tests on <3-m. dolomite at 32% and 72% of critical speed at feed rates that were equal in tons per hp-hr. Cataracting was prominent at the higher speed and absent at the lower. Distribution curves (Sec. 19, Art. 19) on the products show more complete natural-grain release at 28~35-m. and a steeper slope (coarser) fine grind at the higher speed despite the percentages of <200-m. being substantially the same in both cases (17.6% at 32% critical and 17.0% at 72%). The peaks of the distribution curves were of the same elevation and occurred at 20-m. (36% of the *mog*), but the coarser material was slightly finer at the higher speed. Power draft at the cataracting speed was higher, feed rate was higher, and time per pass lower. The conclusion is, therefore, that hammering breaks down the coarser material more rapidly than rubbing, frees natural grains more readily, and does not produce as much very fine material with the same expenditure of power.

3. SHAPE OF MILL

The mill barrel comprises the shell and liners. The shapes that have withstood the test of time are cylindrical and cylindro-conical. Diameters of commercial mills range from 3 ft. to 10 ft. and yet larger sizes are in prospect. Lengths have ranged from 2 ft. to 24 ft. The ratio of diameter to length ranges from 0.23 to 1.5. The inner surface ranges from smooth to various degrees and forms of roughness. The relative diameters of inlet and outlet openings, taken with mill lengths, determine the mean slopes on which pulp flows through the barrel, ranging from a small fraction of an inch to several inches per foot. All of these structural differences produce corresponding differences in mill operation and performance.

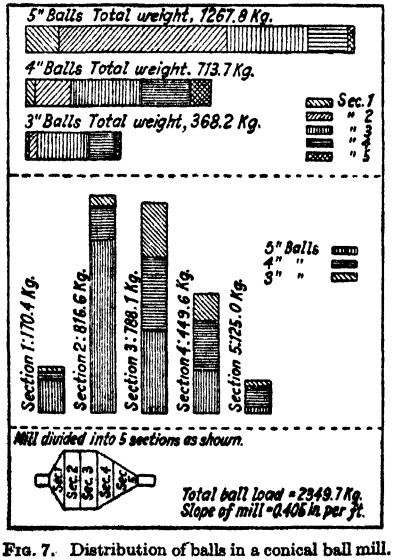

FIG. 7. Distribution of balls in a conical ball mill.

The barrel supports, confines, guides, and imparts driving force to the tumbling load. Consequently its shape, together with the mill speed, has a major effect in determining the paths both of the individual tumbling bodies and of the mass thereof, and of the pulp; its diameter taken with the extent to which it is loaded determines maximum and average crushing pressures in the tumbling load; and its volume taken with the feed rate and the comparative levels of its feed and outlet lips determines the time per pass that the average particle is subjected to grinding action.

Paths of tumbling bodies, in so far as they are determined by the barrel, are such that the center point of any given tumbling body in the usual cylindrical barrel travels in a roughly plane surface perpendicular to the mill axis when the mill is run at cascading speeds (Art. 2). Particles of rock follow similar paths except as they are forced toward the outlet by difference in head of pulp and by the excess of baffling effect of the higher head-end closure. But in small models of cylindrical mills run without pulp at cataracting speeds, the ball load heaps up against the ends and there is marked concentration of the larger balls there. It is asserted by H. Hardinge (*PC*) that similar segregation has been observed on shutdown in high-speed operating mills.

In the conical mill with standard cones (Art. 7) one effect of the shape of the discharge-end cone is to guide the downcoming stream toward the base of the cone. The larger balls (rods are not used in

typical conical barrels) and coarser rock both tend to ride the surface of the load in the discharge cone because this part of the shell is below cataracting speed whether the cylindrical portion is or not. Since the surface layer is least confined, the result is that large balls are concentrated in the cylindrical section and coarse pulp tends to be returned to the coarse-ball zone. Size segregation of the crushing bodies is not sharp, but there is distinct concentration of the larger sizes at the longest diameter and *vice versa*, as is visible in a model, is shown for a working mill by Fig. 7, and is confirmed by the fact (*124 P 209*) that in changing from a 2-in. to a 4-in. ball load, charging 8 tons of 4-in. balls forced out an equal tonnage of the smallest sizes. There is also marked heaping up of the load in the cylindrical section in a model with a relatively short cylinder. This heaping increases at cataracting speeds.

The correlation between heaping and segregation in the conical mill, taken with the well-established (and mechanically reasonable) tendency for the charge to heap against the ends in cylindrical mills, would seem to support the Hardinge contention that there is segregation of large balls toward the ends of cylindrical mills, and to indicate further that this segregation will be greater the rougher the end sections.

Fine sand, which penetrates the load to the shell, tends, in a conical mill, to be accelerated toward the discharge lip on the rising side of the discharge-end cone by the lifting effect of the grooves at the liner joints, and by liner ribbing located along elements of the conical surface.

Diameter of barrel determines pressures in the tumbling load and affects impact magnitude in cataracting. Pressures in the tumbling load may be estimated very roughly along the lines indicated in Fig. 8.

In a static ball load averaging 300 lb. per cu. ft. of over-all volume (Art. 6), the mean pressure at any depth is slightly more than 2 lb. per sq. in. per ft. of depth. Maximum mean gravitational pressure in a load in dynamic equilibrium in the position shown in Fig. 8 would be against the shell under vector *A*, since this represents the maximum depth through which there is continuous ball-to-ball contact. The length of this chord is roughly three-quarters of mill diameter. Pressure is concentrated owing to the shape of the tumbling media. Assuming balls of one size, and a mean of cubical and hexagonal packing, the number of contacts per sq. ft. against the shell is approximately $157/d^2$, where d = diameter of ball in inches. Contact area per ball varies according to diameter and rock-particle size. Taking Bond's formula for contact area (Art. 6), and assuming 2-in. balls in a 6-ft. mill running at maximum cascading speed (dynamic repose angle about 60°), the number of contacts per sq. ft. against the shell would be about 40; the head would be 4.5 ft.; hence the mean pressure per sq. ft. would be 1,350 lb. or 34 lb. per contact. With 5.9 sq. mm. contact area for a 2-in. ball this makes ball-to-shell pressure of the general order of 3,700 lb. per sq. in. If this is doubled for shock, which seems justifiable, and the fact that even further concentration of load occurs by reason of the particulate and jagged character of the intervening rock particles is considered, the amazing thing is not that so much rock is crushed but that so much passes through without crushing. This is due, of course, to a number of facts. Balls in the load average at least three points of support; the mean head in the load (roughly half the average of *A* and *B*, Fig. 8) is much less than half of *A;* material between balls cushions shock; coarser particles fail to nip; and much of the finer material travels a considerably longitudinal distance between presentations to a grinding contact.

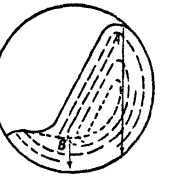

FIG. 8. Pressures in a cascading load.

Impact magnitude in cataracting is proportional to mv^2, where m is the mass of a falling ball and v its gravitational velocity. The latter factor is, of course, dependent on mill diameter. Practice tends to proportion mill diameter to maximum feed size, all other things being equal.

Length of barrel. Modern practice is to make the ratio of length to diameter from 1.33 to 3.0 for rod mills, the lower ratios corresponding to the smaller mills; for ball mills taking coarse feeds (>1/2-in. max.), the ratio ranges from 0.7 to 1.0; for primary ball mills taking feeds <1/2-in. maximum, ratios range from 1.0 to 2; for tube mills with ball charges the usual range is 2.5 to 3.3; and for tube mills with pebbles or with composite charges the range is normally 3.8 to 4.5.

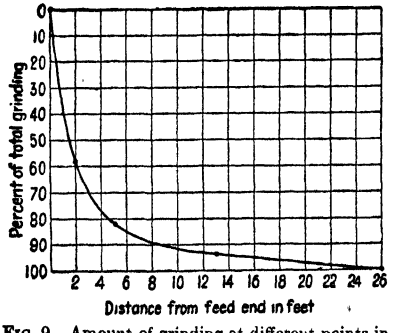

FIG. 9. Amount of grinding at different points in a 6×22-ft. tube mill, dry-grinding talc.

The reasons underlying these different proportions are various. Rod mills are made long in proportion to diameter in order to prevent the rods from becoming crossed, but Coghill and deVaney (*CEG*) assert that a 6×4-ft. mill with a rod load worked without rod tangling. Ball mills taking coarse feeds are made of large diameter to insure heavy impacts and high in-load pressures, and length is kept down in order to obtain the steep pulp gradient necessary with coarse material to minimize time per pass and permit large circulating loads. With finer feeds it is possible to maintain rapid flow with a lower pulp gradient, and since with a given mill diameter capacity is nearly proportional to length while power consumption does not increase quite

so rapidly, the longer mill is preferred for economy, if the capacity can be utilized, still maintaining the large diameter. Ball-tube mills are made long to gain time-factor while keeping down diameter to save power and liner wear. Pebble-tube mills require even longer time-factors because of low specific gravity of the tumbling media; diameter must be kept down in order to prevent pebble breakage.

A long mill which is underloaded may complete 85% or more of its total grind per pass in a length equal to its diameter (see Fig. 9). The remainder of the mill is then wasting power and, if preparing for concentration, may do harm to recovery and grade of concentrate by overgrinding. Even on a hard ore, wet-grinding with a pebble load, substantially 80% of total reduction to a normal flotation size is completed in the first half of the mill (see Table 4).

Table 4. Rate of grinding in 5 1/2 × 22-ft. Rand tube mill (*After Dowling, RMP*)

Location of sample	Sizing test, % weight			Grinding, % of total reduction, effected	
	+60	+90	−90	+60	−90
Feed	73	20	7	0	0
4 ft. from feed end	46	29	25	45.8	36.0
11 ft. from feed end	26	30	44	79.7	74.0
18 ft. from feed end	19	34	47	91.5	80.0
Discharge	14	29	57	100	100

Change in length is a good way to vary capacity. Thus at ANDES 9×7-ft. mills were increased to 9-ft. length by flanging on additional cylinder. Increase in capacity was roughly proportionate to increase in effective volume (about 25%). Table 2 shows the effect of decreasing capacity by installing a grate at a distance back from the discharge end. For details of such an installation see Fig. 55. At SYLVANITE (*41 CIMM 283*) a 7-ft. Marcy mill was arranged for installation of the grate at either 8-ft. or 10-ft. length. The mill-volume difference was 24.5%; power difference was 21.6% (240 and 292 hp.).

Volume of mill barrel is important principally for its effect on the time of passage of pulp through the mill. The effective volume is roughly that between the shell and a plane inclined in the direction of the mill axis and extending from the bottom of the feed inlet to the bottom of the outlet annulus, diminished by the volume of tumbling media within this zone when the mill is at rest. (See also Art. 16.) The volume of pulp fed per minute divided into this effective volume approximates the TIME PER PASS in minutes.

The maximum rate at which pulp can be flowed through the mill depends upon the pulp consistency and the difference in elevation between inlet and outlet lips. No figures for estimate are known; the question must be solved by trial, if it becomes important. On the other hand, thin pulps may be so fluid that the pulp surface slumps well below the above-mentioned plane, in which case the effective volume decreases, time per pass decreases, wear of medium increases, and grinding usually falls off.

Large mills have a smaller ratio of shell weight to tumbling charge than small mills; therefore dead-load power (see Art. 15) is a smaller proportion of total power. Since the grinding work per unit of live-load power is constant within limits (see Art. 14), the larger mill is the more efficient. Its first cost per unit of capacity is also less, and the capacity per square foot of mill floor space higher.

At CIA. ASARCO (HARDINGE Co., *PC*) an 8-ft.×36-in. conical mill with 15-ton ball load running at 76% of nominal critical speed reduced 286 tons per 24 hr. of <3/8-in. feed to 48 *mog* (60.9% <200-m.) with 460% circulating load, drawing 13.4 hp-hr. per ton of new feed. On the same material a 10-ft. ×48-in. mill with 30-ton load, operating at 68% of nominal critical, handled 582 tons per 24 hr. to the same *mog* (61.4% <200-m.), with 300% circulating load and a power expenditure of 11.6 hp-hr. per ton. At CONSOLIDATED M. & S. the 10-ft. conical mill ground 15% more tons per hp-hr. than the 8-ft. through the same size range, and at ANACONDA a 20% advantage of 10-ft. over 8-ft. was indicated (Penick, *87 A 75*). Johnson (MINE & SMELTER SUPPLY Co., *112 A 86*) asserted that if INSPIRATION, in 1916, had installed the then prevailing 6×4 1/2-ft. Marcy mill instead of the 8×6-ft. which was installed, 100 of the smaller mills would have been required instead of the 40 large, 12,000 motor hp. would have been needed instead of 10,000, and the requirement for grinding-mill floor space would have been 13,000 sq. ft. instead of 8,000. MAXSON (ALLIS-CHALMERS Co., *112 A 86*) concurred in the assertion that the large mills are more efficient.

On the other hand, Gow *et al.*, on the basis of laboratory tests, conclude that while large mills will grind more than small per unit of volume, they are not more efficient in production of useful new surface (Sec. 19, Art. 19). Coghill and deVaney (*CEG*) conclude, from comparison of performances of a 19×36-in. laboratory mill and a 6×4-ft. plant mill on the same feed and making substantially identical products, that the tons per net hp. are the same irrespective of mill size. Parsons (*60 CMJ 693*) apparently reads Davis' experiments (*61 A 254*) with stage crushing to prove that two small mills are more efficient than one large for the same tonnage. This reading would not seem to be justified by the text. Parsons asserts that tests at CONS. M. & S. confirm the greater utility of the smaller mill. The entire trend of recent practice is, however, toward the use of large units.

Height of discharge in relation to the elevation of the inlet opening, taken in connection with the length of barrel, determines the mean slope of the pulp surface and consequently the mean rate of flow of pulp through the mill. It also determines the maximum depth of any possible liquid body of pulp in the mill.

It is general experience that when running at cataracting speeds the presence of liquid pulp above the toe decreases reduction of the coarser feed particles, this decrease being the more serious the greater the pulp density. When feed is fine enough to be ground effectively without cataracting impacts, the effect of a pool above the toe is not so serious unless the ball load is far below normal (Art. 4).

Tests at LAKE SHORE (*LSS*) showing the effect on circuit capacity of change in height of discharge are summarized in Fig. 10. The reduction was effected by placing grates a few inches in from the discharge-end heads and providing lifters to elevate discharged pulp to the trunnion. In each case also, the change-over was accompanied by an increase in ball load from 45 to 50% of mill volume.

Legend, Fig. 10:

C1. Circuit 1, flowsheet as follows:

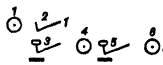

1. 2 @ 7×6-ft. ball mills, 24 r.p.m., 4-in. balls.
2. 2 @ 4×18 1/3-ft. rake classifiers.
3. 1 @ 16-ft. bowl-rake classifier.
4. 1 @ 6×16-ft. ball mill, 25 r.p.m., 1 1/4-in. balls.
5. 1 @ 16-ft. and 1 @ 24-ft. bowl-rake classifier in parallel.
6. 3 @ 5×16-ft. ball mills in parallel, 30 r.p.m., 3/4-in. balls.

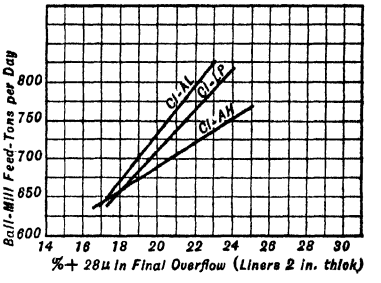

A. All mills.
H. High-discharge, 13- to 15-in. I. D. trunnions.
L. Low-discharge, grate openings to shell, spiral-scoop discharge lifters.
P. 6×16-ft. mills only.

FIG. 10. Effect of height of discharge in ball-mill circuits at LAKE SHORE.

Independent tests (Art. 6) proved this increase to account for 80% of the capacity increase. Hence of the 8.3% increase in circuit capacity with a 24% >28-μ product accompanying the change in the 6×16-ft. primary tube mill, only 1.7% was directly attributable to the change in the primary mill. By a complicated method (see the original paper *43 CIMM 299*), the total improvement in performance of the 6×16-ft. mill was reckoned to vary from substantially zero at a grind to 18% >28-μ to 35% at 24% >28-μ, from which the improvement due to the change in pulp gradient alone ranges from 0 to 7% over the same tonnage range. About half of this amount of benefit was further gained by a subsequent change-over to grates in the 5×16-ft. mills.

Power increase on the change-over at LAKE SHORE was proportional to the capacity change. Of the increase of 22 hp. for the change in both the 5- and 6-ft. mills only 4 hp. was attributable to the drop in level itself. This was only about 2% of the total power draft.

Results of a similar change in the primary ball mills at HOLLINGER are shown in Table 5. The improvement from high discharge to full-grate discharge was 28% in tonnage to an insubstantially finer grind; the improvement in production per unit of power was much less, 7.7% in tons per hp-hr. to the same *mog*, 5.5% in tons <200-m. produced per hp-hr., and 6% in new surface produced per hp-hr. (Bond method, Sec. 19, Art. 19).

Parallel operation of 8-ft.×60-in. conical mills at UCHI GOLD MINES (*PC*), one with a low-level grate (Fig. 47), the other without grate but with a high-level discharge spout, both mills taking 1-in. feed and making classifier overflow containing 70% <200-m. showed that the grate-mill capacity was 14.5 t.p.h., while the capacity of the high-discharge mill was 13.8 t.p.h. Corresponding power drafts were 290 and 263 hp., so that tons per hp-hr. were 0.050 and 0.052, respectively.

High-level *vs.* low-level mills. The battle between the proponents of these two methods of operation is far from decided. The LAKE SHORE data (above) involve too much translation by the writers to be convincing by themselves. The HOLLINGER data (Table 5) indicate a real advantage in capacity for low-level operation with relatively coarse feed (<3/8-in.), but no marked difference in efficiency. Tests at INTERNATIONAL NICKEL (*32¹ Bul CIMM 969*) showed that installation of a low-level grate increased capacity and power consumption linearly. SYLVANITE (*32¹ Bul CIMM 170*) reports a decreased power consumption per ton of <200-m. produced with low-level operation as well as a substantial increase in capacity; also a decrease in surging, and easier inspection and relining. McClelland (*Bul 342 CIMM 407*) says that in one plant, grinding to 85% <325-m., change to low-discharge operation increased circulating load ratio to 10, decreased overgrinding, increased ball and liner wear slightly, at a new-feed rate of 175+ t.p.d. in a 7×6-ft. (I.D.) ball mill. King and Clemes (*46 IMM 600*) state that moderately low-level discharges are universal on the Rand (except where motors have insufficient capacity) but that at one mill lowering of the discharge lip from 12 in. below the axis to 30 in. resulted in but 6% increase in capacity and an excessive increase in liner wear. Coghill and deVaney (*CEG*) summarize their laboratory indications to the effect that low-level operation with high speeds and high ball loads increases capacity, but that efficiency is better with high discharge and lower

speeds. At EMPIRE STAR (*PC*) the capacities of 7-ft. ×48-in. and 8-ft.×60-in. conical ball mills with reverse-cone grates (Fig. 46) were increased 8 to 10% by raising the discharge height by use of an annular disk fixed in the discharge trunnion. Diameters of discharge opening were thus decreased to 7 and 9 in. respectively. The ball load was also increased proportionately. There was a slight increase in power consumption but a considerable decrease in power per ton ground. At COMBINED METALS REDUCTION Co. (*PC*) similar raises in overflow levels in 8-ft.× 48-in. and in 8-ft.×60-in. conical mills increased capacity 11.5 and 8.5%, respectively; slightly more power and steel were consumed, but power and steel consumption per ton to the same *mog* decreased.

The weight of the evidence would seem to be that low discharge in cylindrical mills increases capacity, by as much as 50% if classifier capacity is adequate; that this increase is probably gained at the expense of a fall in tons per hp-hr. to flotation size or finer and an increase in steel consumption; that it is due in considerable part to the increase in ball or pebble load made possible by grates; and that observation of ball load and pulp density is easier with low-level grates, but that a high-discharge mill is somewhat easier to run.

4. MECHANICAL CONSTRUCTION

Requisites of good construction are (*1*) true alignment of the shell and the supporting elements (trunnion bearings and/or rollers) therefor, (*2*) strength and rigidity sufficient to maintain such alignment with a loaded rotating mill, (*3*) reasonable balance of the rotating assembly exclusive of mobile load, (*4*) a power chain of reasonably high efficiency, (*5*) protection of driving elements and bearings against splash and drip, (*6*) provision for certain introduction of feed, (*7*) protection against wear of barrel by the mobile load, (*8*) means to insure proper action of the mobile load, (*9*) watertightness, (*10*) ease of access for maintenance, (*11*) provision for ready dismantling and reassembly of maintenance parts.

Shell is made of heavy steel plate, usually with welded butt joints. Cast semi-steel shells are also available. Heavy cast flanges for attachment of heads are usually welded to the ends of plate shells, planed with parallel faces which are grooved to receive a corresponding tongue on the head, and drilled by template for bolting to the head. A tight and rigid joint, amply strong against shear, is thus provided. The shell is also drilled by template for liner bolts.

Heads are usually cast semi-steel, ribbed for reinforcement. They may be welded directly to an unflanged shell or machined and drilled to fit shell flanges. TRUNNIONS are usually cast integral with the heads, carefully turned to the mill axis, and highly polished to reduce bearing friction.

Mill barrels are available in which heads, trunnions, trunnion bearings, and shell are made heavy enough to permit extension of length by bolting together two shells.

Bearings. Trunnion bearings are made large to insure low unit pressures. Normally the lower half only is babbitted, the cap being cored out to receive a large body of grease or of waste to absorb liquid lubricant. The lower half is usually of ball-and-socket type for self alignment, but some manu-

Table 5. High *vs.* low discharge in Hollinger ball mill *a* (*HS*)

Discharge level, in. below center line of mill	New feed, tons per hr.	Circulating load, % *b*	Tons of mill discharge per min.	Pulp density, % solids	Approximate time per pass, min.	Hp. consumed	Sizing				Tons new feed per hp-hr.	Performance		Balls	
							Feed		Product			Tons <200-m. produced per hp-hr.	New surface per hp-hr., thousands of sq. meters	% of mill volume	Renewal diam., in.
							>3-m.	<200-m.	>48-m.	<200-m.					
10.2	46.5	414	3.9	79.4	0.38	323	1.1	15.5	2.0	65.9	0.144	0.072	2.18	50	3
10.2	53.2	515	5.5	78.7	0.26	340	0.6	15.8	1.4	66.2	0.156	0.069	2.36	*c*	2½
19	49.7	572	5.6	80.1	0.27	376	0.9	14.6	1.7	65.3	0.132	0.067	1.99	50	3
39	62.8	556	6.9	80.2	0.27	410	0.8	15.7	2.0	66.5	0.153	0.068	2.31	50	2½
39	59.6	503	6.0	80.5	0.25	390	0.8	16.6	2.0	66.4	0.153	0.076	2.31	50	3

a SIZE OF MILL: 6 ½×14 ½-ft. inside new liners. SPEED: 24.55 r.p.m.; with liners somewhat worn this corresponds to ± 81% of critical. LINERS: Smooth, without lifters. BALLS: 50% mill volume; 3-in. renewals.

b By difference in tonnage samples of mill discharge and new feed taken once daily.

c 4 days at 3 in. below centerline and 3 days at 6 in. below centerline. Great difficulty was experienced in retaining balls since the ring grizzly on the discharge had been opened at the end to prevent resistance to the high pulp flow.

facturers recommend rigid bearings. Countershaft bearings are double, ring- or chain-oiling, the two either cast integral with a base plate or machined thereto and provided with set-screw adjustment. The best arrangement from the standpoint of initial and maintained alignment is probably to mount both the drive-end trunnion bearing and the countershaft pinion bearings on one sole plate, the bearing bases being conformed for bolting together across a joint accurately machined for gear-and-pinion alignment.

Gear is bolted to flanges on the shell. On trunnion-type mills it may be attached to either head- or discharge-end flanges, according to convenience of plant layout; with discharge end carried on tire and rollers it is most conveniently placed at the feed end; with four-roller support, it is usually located near the center of the shell. Gears are ordinarily of spur type on small mills and on large pulley-driven mills; they are normally of double-helix Wuest type when the pinion shaft is direct-connected to the motor; either type is used when the pinion shaft is connected to an enclosed reducing gear, which is the preferred modern drive. SPUR GEARS are available in cast iron, machine molded or cut; in cast semi-steel or in cast steel, both cut. They may be cast entire or split. HELICAL GEARS are invariably steel with cut teeth. Flanges of all gears are bored and drilled to template concentrically with the mill axis, and are faced both sides to permit reversal. SPLIT GEARS have the advantage that they permit assembly without dismantling the mill or disturbing the head bolts; their disadvantage, if any, lies in the danger of loosening of the rim bolts, with consequent loss of alignment and probability of breakage.

Spur pinions are invariably steel, usually cast, with cut teeth. HELICAL PINIONS are usually steel forged integral with the pinion shaft and cut.

Drive is various. Old style is by flat belt to a pulley on an extension of the countershaft. Present practice is V-belt drive to a pulley on the countershaft for smaller mills and direct connection to the countershaft through flexible or magnetic couplings for large mills. MOTORS are discussed in Sec. 20, Art. 7.

The CHEAPEST DRIVE, from the standpoint of first cost, is one with a machine-molded cast-iron spur gear on the mill, cast-steel cut pinion, and pulley-driven countershaft. A cast-steel cut gear is mechanically better but more expensive. A long-center horizontal BELT is best from mechanical considerations, but takes up much floor space. With V-BELT drive the motor may be placed in any position with respect to the driven pulley, but on account of splash is best not placed below the mill axis. On account of the heavy starting load, CLUTCHES must be used with belt drives unless the belt and motor are greatly oversize. Any standard friction clutch is satisfactory, but it should be comfortably oversize, (50 to 100%) to withstand excessive starting strains and be well protected against grit. One form has the pulley mounted on a QUILL with a friction clutch. This makes for easier alignment than the ordinary friction-clutch pulley. Rarely a BEVEL GEAR is used in place of a spur gear on the mill but end thrust on the pinion shaft causes difficulty. SILENT-CHAIN DRIVE of the mill countershaft has the same advantage as the short belt and no slip at starting, but is more expensive. No clutch is required for the drive itself, but one must be used in lieu of an oversize motor. GEAR SETS in various combinations are used. The cheapest has the usual spur gear on the mill and a large gear on the mill countershaft, driven, through a flexible coupling, by a pinion on the motor. A more compact but somewhat more expensive arrangement uses a standard gear-speed reducer on the motor, attached through a flexible coupling to the mill countershaft. The gears in the speed reducer are enclosed, run in a bath of oil, and are more efficient and longer-lived than the open gear set first described. Both permit the use of high-speed motors. The most expensive but most efficient drive is a HERRINGBONE GEAR on the mill with a slow-speed motor direct-connected to the pinion shaft through a flexible coupling, ordinarily of the pin-and-bushing type. Speed reduction can be as great as 20 to 1, so that the motor speed required is from 300 to 600 r.p.m., according to the diameter of the mill. This drive showed 10 to 15% saving in power over ordinary belt-driven countershaft and spur gears on conical mills at CALUMET & HECLA (*109 P 759*). Wormser (*114 J 768*) says the opinion is commonly expressed at mills which he has visited that herringbone gears easily make up for the added cost in increased smoothness of operation. Dirt must be carefully excluded. A difficulty with direct connection is the end surge of the mill consequent upon the clearance that must be left between trunnion shoulders and mill bearings to compensate for expansion with temperature rise.

Feeding. The primary function of a feeder is to transport pulp from some receiving point outside the mill into the mill barrel, and to do this smoothly, certainly, and with sufficient driving force to overcome any tendency for the pulp to move in the opposite direction. As secondary functions, the feeder may be required to elevate from receiving to delivery point, to excavate at the receiving point, and to deliver tumbling media as well as ore pulp.

Resistance to introduction of feed is found in the inlet passage, and in a resistance to flow of pulp through the mill that is built up by the discharge arrangements, the tumbling load, and the plastic character of the pulp itself. The greater the sum of these resistances, the more positive the action of the feeder must be. The matter is relatively unimportant with small mill throughputs, but in large mills running with high circulating loads, the feeder is often the bottleneck.

Feeders are almost invariably some form of spiral tube which opens into a hollow cylinder on the axis of the spiral, the cylinder forming an outward extension of the feed trunnion.

Scoop feeder (Fig. 11) is usually built of plate. In the form shown, outside plate *a* forms a one-turn spiral and a little more than one-half of the central cylinder, the remaining shell of which is omitted to permit entry of material from the spiral. Plate *b* and the side plates *c* complete a rectangular spiral tube from inlet *d* to the central tube. This 4-plate assembly is welded together. One end of the central tube is closed by a circular cover plate *f*, bolted to a side plate *c*. A ring *g* is welded to the other side plate and then machined parallel to the plane of the spiral, after which the assembly is drilled to a template and tapped for stud bolting to the smaller end of spool *h*. The assembly comprises the feeder, which is stud-bolted by the other end of spool *h* to the trunnion. Holes *i* are for bolting on a digging and wearing lip.

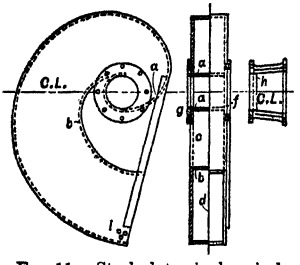

FIG. 11. Steel-plate single-spiral feeder (*after Hardinge Co.*).

The desirable elements in such a design are: generous passages to prevent bridging, at least three times the diameter of the largest feed particle; stiffness, light weight, sufficient turns (at least 1 1/2) to prevent spill-back; sufficient flare of the spiral at the lip to cause some digging, but not enough to cause splash; as great a gradient as possible through the spool and trunnion. The spool and trunnion liners should flare gradually from feeder to mill, if practicable; with a long run here, small diameter, and coarse feed, spiral rifling is necessary, but frequently not sufficient to move large tonnages.

At ASTURIANA DE MINAS (*115 J 399*) the capacity of a mill taking 1.5-in. feed was limited by the feeder to 175 tons per 24 hr. The smallest section of the spiral was 5 1/2×6-in. and the opening into the mill trunnion was 7-in. diameter. Capacity was increased to 200 tons by making the thimble between the scoop and the trunnion cylindrical instead of conical and then increasing the diameter of the central discharge opening from the feeder to 9 in. and placing a helix of 10-in. pitch through the feed trunnion. A high-pressure water jet through the spool helps reduce congestion. At ANACONDA difficulty in feeding coarse ore was helped by recirculating a part of the mill discharge, which furnished lubrication and suspending power.

Pumping action of a spiral is increased by increase in diameter and number of turns; diameter must be proportioned to mill speed to insure against exceeding critical speeds (see Art. 2 and Sec. 18, Art. 18).

The lack of balance in a single-spiral feeder is undesirable from the standpoint of power draft. For this reason, and in the hope of increasing capacity, double- and triple-scoop feeders have been built. If these scoops are placed in the same plane, the number of turns per spiral must be reduced, with consequent spill-back; if they are placed in different planes, gradient in the spool is decreased, and provision must be made for support of the outer end, or wobble and breakage are certain.

Hines (*59 A 249*) reported a series of tests on scoop feeders from which he concluded: (1) The capacity of a spiral feeder is proportional to the length of the spiral. (2) The capacity of a single-scoop feeder is twice to four times as great as that of a double-scoop, according to the form of the latter. (3) The capacity of a 3-way scoop is about half that of the single scoop. (4) With coarse feeds the capacity of the scoop is limited by the trunnion.

Drum feeder (Fig. 12) is a partial spiral enclosed in a cylindrical or cylindro-conical shell *a*, with opening *b* for receipt of feed and opening *c* for discharge. The space *d* serves to retain feed introduced during the time that the opening of the spiral is above receiving position, thus supplying the necessary storage space to bridge over from the continuous supply to intermittent discharge.

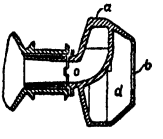

FIG. 12. Drum feeder.

Combination feeder adds a scoop to a drum feeder. The scoop may be mounted on the periphery of the drum or on the spool between the drum and the mill trunnion.

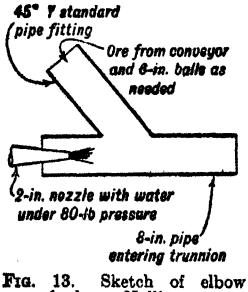

FIG. 13. Sketch of elbow feeder at Hollinger.

Sizes. Scoop feeders are standard in 15, 24, 30, 36, 42, 48, 60, and 72-in. radii and available in any practical radius necessary to elevate sand return from a mechanical classifier. Drum feeders are of relatively small radii, the limiting factor being the provision of sufficient storage in the drum.

Material. Modern practice is to cast the smaller drum and scoop feeders of iron, semi-steel, or steel and to make the larger feeders of both types of steel plate with welded joints, the spool being cast in all cases. Scoop feeders are preferably symmetrical, the spools flanged on both ends, and with a cover plate, thus making them reversible

and consequently adaptable to mill rotation in either direction. Drum and combination feeders are, of necessity, specific to a particular direction of rotation.

Fig. 13 shows a special form of elbow feeder for ball mills. A SCREW FEEDER is sometimes used for soft, dry feed; at the T. P. Kelley & Co. graphite plant (*114 J 325*) scoop feeders failed while this type was successful.

Feed box is required for scoop feeders. It consists of a rectangular box built around the scoop, fitted closely around the spool between the feed trunnion and scoop proper, with clearance all around the scoop circle greater than the largest lump of ore or the largest ball (or pebble) fed. Feed is introduced through suitable openings. If feed is brought into the feed box on the upcoming side in the plane of revolution, the capacity of the feeder is considerably greater than when entry is at right angles to this plane. The top should be protected with a grating.

Choice of feeder. Drum feeders are preferable for coarse dry feeds as they keep large particles out of the feed box and thus avoid digging shocks to both box and feeder. Scoop feeders have the great advantage of serving both as feeders and elevators. The combination feeder has the advantages of both of the others.

5. LINERS

Lining is used on all surfaces with which pulp comes in contact in order to take the wear and thus conserve the strength and tightness of the barrel structure. Shell lining has an important secondary function, *viz.*, to act as the final link in the transmission of energy to the tumbling load. When the load slips, energy input and consequently grinding are decreased. With a smooth liner and hard sand in the mill, slip is slight with a normal load. Gow *et al.* (*112 A 33*) claim that slip is small with smooth liners at 55% of critical, but most operators believe higher speeds than this are necessary with such liners and that rough liners are necessary at this speed. Slip increases with decrease in tumbling load, speed, pulp density, and hardness of ore, and roughness of liner becomes correspondingly more necessary for maximum capacity.

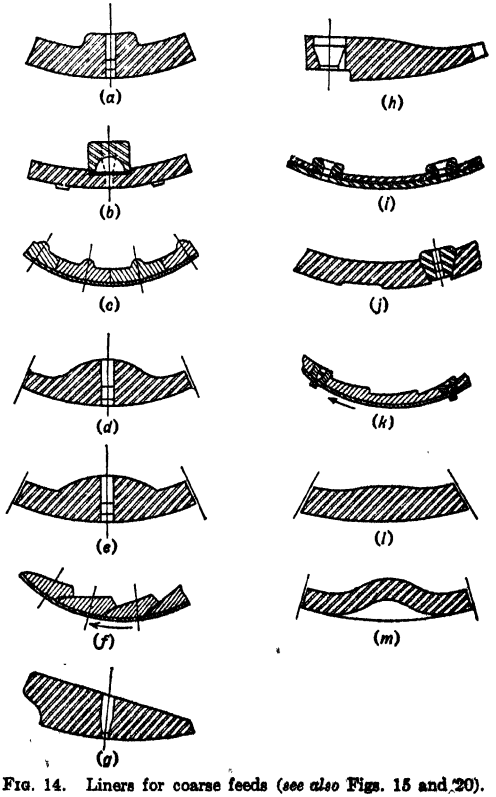

FIG. 14. Liners for coarse feeds (*see also* Figs. 15 and 20).

Shell liners usually differ in type according to whether the mill feed is coarse or fine. Such liners for coarse feeds are shown in Fig. 14; those normally used for fine feeds in Fig. 18. It is apparent that liners for coarse feed produce sensible ridges parallel to the mill shell, while those for fine feeds are smooth or uniformly roughened. ROD-MILL LINERS are usually ribbed continuously for the full length of the shell. Ball mills taking coarse feeds are also ribbed, but the ribbing is frequently staggered. Circumferential joints are normally staggered to prevent circumferential grooving. Fine-grinding ball mills are frequently lined with one of the more irregularly roughened liners (Figs. 18 to 21) or with liners that are either smooth or largely smooth but have widely spaced lifters. Pebble-mill liners have the same general surface characteristics as those for fine ball mills.

Size of liners. Shell liners are usually made in blocks or other shapes of such size that they can be introduced into the interior of the mill through a manhole or the discharge-end opening. Maximum weight of individual pieces ranges ordinarily from 120 to 175 lb.; heavier pieces are difficult to handle manually. Ring liners have been used. End liners are sectioned radially or in rings or may be cast in one piece.

Action of ribbed liners. Height, spacing, and conformation of ribs determine the mechanical action of the mill shell on the tumbling charge. The mechanical work of any given part of the liner in a mill properly operated starts as it runs under the toe of the tumbling load. While it is under the load its function is to exert drag on the outer points of the balls of the outer layer so as to cause them to roll on the liner and not to slide. As it emerges from under the load in mills run at cataracting speeds, the liner is expected to throw the media along a trajectory that will end on the toe of the load. The function of ribbing is to aid one or both of these actions of the liner. MAXIMUM LIFT and THROW are attained by lifters of considerable projection and nearly radial sides (Fig. 14, items *a*, *b*), but such lifters substantially immobilize the individuals in the outer layer of media, thus reducing the effective diameter of the mill and, in effect, changing the surface presented to the load to a pebbled or rippled character. Test work at Hollinger (*HS*) indicates that when this is done the grinding is no better than on a smooth liner. High lifters also throw cataracted media in masses, so that they tend to strike the opposite breast, wasting impact and causing an uneven power draft. Maxson (*AIME, Feb. 1941 meeting*) asserted that in a mill grinding 50 t.p.h. change in rib height from 1/2-ball-diameter to 1/3 increased capacity greatly. Hence ribs should be and are kept down, in general, to a projection of less than one-half of renewal-ball diameter, and side slopes are made gradual. Projection is usually less the higher the speed. Some liners are made with ribs having unequal slopes on the two sides; they are designed to permit the steep slope to lead at slow speeds and *vice versa*. At TENNESSEE, using shiplap liners (Fig. 14, items *f*, *g*, *h*), the steep pitch is made to lead in ball mills and follow with rod loads. Projecting wedge bars (Fig. 14, items *i*, *j*) are made reversible to permit longer maintenance of lifting effect.

Wave liners (Fig. 14, items *c*, *d*, *e*) are the type most used in primary mills. They give sufficient lifting effect without immobilizing action on the outer layer of balls. Elevation of the wave crest ranges from very slight (Fig. 14, item *l*) to, perhaps, 2 in. (item *d*).

Shiplap liners are the result of an attempt to reduce the lifting effect of wave liners without, at the same time, encouraging smoothing of the liner by wear. Normal placing of such liners is shown in Fig. 14, item *f*. Much experimentation has been done on these liners to so conform the new inner surface as to prevent high initial wear on the advancing face. The forms shown in items *g* and *h* are those with the best records.

Wedge-bar liners (Fig. 14, items *i* to *m*) are designed essentially to decrease the number of liner bolts per sq. ft. of shell surface. Inner surface at the wedge ranges from smooth in items *l* and *m* to a definite lifter-type in item *i*. The wedge bars are usually made of more resistant metal than the intervening plates.

Wave spacing. When rib projection is less than the radii of the larger media and rib spacing such that the valleys are not over 2 or 3 medium diameters wide, small changes in proportioning make marked differences in medium action and in liner consumption. Howes (*153 A 396*) reports that with the valleys initially equal to three replacement-ball diameters, wear concentrates in the valleys to such an extent that, in one case, while 2 1/4 in. was being worn from the valleys of a block-type liner (Fig. 15, item *a*), the height of the projection was reduced only 1 1/4 in. The projection was at the same time reduced laterally from a plateau to a knife-edge ridge, indicating that the same tendency for wear to concentrate in the valleys persisted as the valleys became wider. On the other hand, Howes reports that with a low-wave liner, the crests of which were originally two replacement-ball diameters apart, wear concentrated on the projections; these wore off with great rapidity, whereupon capacity decreased 15% and the ammeter needle indicated excessive slip. Howes describes also (*U. S. pat. 2 274 331*) a patented liner of his own invention (Fig. 15, item *c*) in which the valleys are about one replacement-ball diameter deep but of such width that only somewhat less than half of a ball volume can seat therein; plateaus are about one ball diameter wide at the top and the distance c–c. of the plateau ridges is slightly more than two ball diameters. The leading wall of the valleys is radial; the trailing wall makes an angle of about 55° therewith. Howes claims both increased capacity and a marked decrease in liner wear (see Table 7) with ball consumption remaining constant.

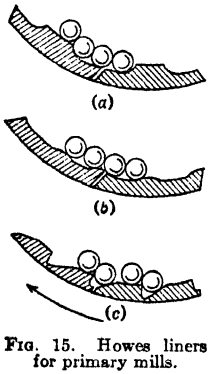

FIG. 15. Howes liners for primary mills.

In 4×10-ft. Marcy rod mills at BERTHA MINERAL CO. (MINE & SMELTER SUPPLY CO., *PC*), doing 2-stage grinding from 1-in. to 48-*mog*, consumptions with different liners were as shown in Table 6. Average life of 10-wave liners was 21 mo.; one 20-wave liner lasted 47 mo.; while the 30-wave liners averaged 44 mo. and one lasted 52 mo. 24 da.

Table 6. Liner wear *vs.* wave spacing

Number of waves	Average wgt. of liners, lb.	Scrap wgt., lb.	% wgt. scrap	Tons crushed	Lb. liners per ton ore	Number of sets tested
10	10,835	3,646	33.6	153,012	0.0708	6
20	11,621	4,360	37.5 *a*	338,328	0.0343	1
30	11,828	3,704	31.3	337,132	0.0351	7

a If scrap weight were the same as 30-wave liner, then scrap loss would be 31.9%. Only one set was tried out.

Spinning impulse of liners. The effect of the slopes of the valley walls on spin of the outer layer of balls may be visualized by step-by-step revolution of a sketch of a ribbed liner around its center of revolution from the position of entry under the toe to the position of departure from the load. It is immediately apparent that the trailing wall of the valley is the effective one. Hence the leading wall should be as steep as possible without forming a sharp corner that will encourage chipping or peening. It next appears that the steeper the trailing wall the more nearly radial its push on ball or rod as it moves under the toe, but the farther above the level of the mill axis it maintains an effective spinning force. The portion of the circumference of a smooth liner over which such a liner can exert effective spinning forces on the balls in contact with it is that subtended by planes through the axis, either side of and below the vertical, which make angles equal to the friction angle with the vertical. Considering steel on steel, the friction angle is about 30°, making about one-sixth of the shell surface at the lower part available to cause spinning of the contacting balls as the mill starts up. Introduction of sand has the effect of decreasing the actual friction angle (or of increasing the apparent angle), and thus increasing the effective fraction of the circumference. But in an operating mill with a smooth liner the load, of course, shifts toward the rising side until a considerable part of the raised portion is above the level where any effective spinning work is done on it by the shell. However, by inclining the trailing edge of the liner valley to an extent roughly equivalent to the angular shift of the surface of the load, the slopes of these trailing walls on the rising side relative to the horizontal are decreased and effective slopes therefore persist for all or a considerable portion of an angular distance equal to the slope given them. The Howes liner when new, with two slopes on the trailing wall of the valleys and the tops of the plateaus tangent, insures that at least one ball out of each group of three adjacent to the shell will be receiving a spinning impulse over an arc of about 90°. Spin from the shell is relatively unimportant under the toe, since this part of the load is already active by avalanche action. Hence the steep slope of the trailing wall relative to the horizontal results in no serious loss of effective activity at this point, and is advantageous in catching balls at the outer end of the toe and pushing them back into action.

The shiplap liner and the modifications thereof patented by Howes (Fig. 15, item *c*) embody these principles of valley slopes. Howes decreases valley wear by narrowing the valleys, while at the same time supplying a broad enough peak to prevent formation of a residual knife-edge. As a result wear is said to produce finally a short-wave or undulating liner with the final ridges underlying the troughs of the original valleys.

Straub liner has spiral ribs on the shell, so placed as to throw material, both balls and pulp, away from the grate back toward the feed end. The purpose is to keep large balls away from the grate, both decreasing hammer thereon and putting the larger balls where they can do more good.

Effect of liner on character of product. At CONSOLIDATED MINING & SMELTING CO. (*33 CEMR 139*) it was found that with new ribbed liners the mill discharge was definitely granular; as the ribs wore down there was more sliming and increase in the percentage of coarsest sizes in the product

Material for ribbed liners is almost invariably manganese steel in rod mills and in mills fed with balls larger than 2-in.; with smaller balls chilled cast-iron liners, which are much cheaper in first cost and which normally, also, are cheaper per ton of ore ground, are often used, but if maximum unit capacity is sought, manganese steel predominates in this service also on account of its longer life and the consequent reduction in lost time for relining. SUPER-MOLYCHROME liners made of an electric-furnace alloy steel with Mn, Cr, and Mo the added metals, heat-treated to 450 Brinell, have been used in a number of mills; a small amount of comparative data are given under "Wear," p. 21.

Composition of manganese liners and their heat treatment are both of major importance in obtaining long life; of the two the heat treatment is the more critical, since a liner of suitable composition can be ruined by improper heat treatment. Thus, although properly treated manganese-steel liners will invariably outwear hard white iron, at TONOPAH BELMONT (*52 A 95*) manganese liners in tube mills lasted 16 1/3 mo. and cost 6.4¢ per ton.

ground, while hard white iron lasted 2 yr. and cost 1.7¢. The liner should be tough and as hard as it can be made without substantial sacrifice of toughness. These properties are imparted principally by the heat treatment.

End liners are used solely for protective purposes and are, therefore, usually smooth. Their FORM is based on consideration of ease in handling; their THICKNESS on an attempt to balance against shell wear in order to make replacement times correspond. Wear is much less than that of shell liners, hence at some mills end liners are made of chilled cast iron when shell liners are manganese steel. At HOLLINGER (*HS*) head-end liners usually wore more rapidly than discharge-end in ball mills but not in rod mills. Wear is normally greater at the center than at the periphery. For overflow mills which are lined without removal of the ends, the end liners are made keystone-shaped; if an end is open at relining time, one-piece liners or, as at HOLLINGER, ring liners are used. End liners are sometimes ribbed radially.

Thickness of liners of the type shown in Fig. 14 determines the interval between replacements and, in the case of the shell liners, the extent of variation in critical speed, weight of tumbling charge, charge action as determined by liner-surface conformation, capacity, and power consumption during this interval. These factors are of great importance. Thus in a 6-ft. mill a 3-in. wear of liner will mean an increase of more than 3% in the percentage of critical speed for a mill operating at 24 r.p.m.; the tumbling charge will need to be increased up to 15% of the original charge over the period in order to maintain 45% of mill volume; and capacity and power consumption should increase about 23% as compared with the new-liner figures, if charge volume is maintained. New thickness normally ranges from 2 to 4 in. in the valleys, being greater the less the rib projection.

Effect of wear on operation. Liner wear has, as above noted, a material effect on power consumption and capacity through its effect on internal diameter of shell. The magnitude of the effect for any given mill may be estimated, neglecting simultaneous changes in slip due to changes in liner surface and peripheral speeds, by applying the equation

$$C \propto P \propto D^{2.6}$$

where C = t.p.h. to a given product size (Art. 14), P = net power consumption, and D = internal diameter of mill.

At LAKE SHORE (*LSS*) power and capacity of a 5×16-ft. mill increased gradually up to 135% of the values with a 3 1/2-in. new liner during wear to 1/2-in. thickness; for a 6×16-ft. mill the increase was 28% for the same wear, and for a 7×6-ft. mill there was an increase of 20% during a wear from 3 1/2-in. to 3/4-in. thickness. The LAKE SHORE tests further show that liner wear itself increases as an exponential of the diameter, probably near $D^{2.6}$.

Liner wear must also be taken into account in setting up power-draft controls for feed rates (Art. 18) and in making schedule for renewal of grinding media (Art. 6). In view of these variations, usual practice is to limit wear to about 1 1/2 to 2 1/2 in., which entails a scrap loss of 35 to 50%, according to mill diameter. New liners 3 to 4 in. thick are required to give these wears and at the same time insure against break-through to the shell at bad spots. Smooth liners are sometimes made as thin as 2 in., and occasionally liners are cast as thick as 6 in. at the ribs. Some mills make periodic inspections of liners, *e.g.*, at 2-week intervals (*IC 6757*), in order to permit greater wear, but the danger of breakage of thin plates is so great, so difficult to discover in some cases, and shell wear and weakening so rapid under a broken plate that most operators will not take the risks.

Trunnion liners have a smooth inner surface, or are provided with helical ribs arranged to accelerate entry at the feed end and to hinder discharge (and aid ball entry) at the discharge end. They are invariably of slip-in ring construction, held by bolting or cementing (see discharge- and feed-end liners respectively in Fig. 25) or by abutting against adjacent liners. They may be cylindrical or flared on the inner surfaces. Since they can usually be replaced from the outside, and consumption is small, their design is important primarily from their effect on flow and ease of installation.

Liner bolts. Liner plates are ordinarily bolted in, although keyed-in shell liners have been described (*134 J 25*), and many mills are lined with plates held in by bolted wedge bars (Figs. 14 and 18). Bolts are of steel of high tensile strength, forged to a tapered head of square, rectangular, or oval section to draw down into a correspondingly cast seat in the liner plate. Threads should be heavy and of low pitch. Bolt diameter should be ample to withstand tightening with the heaviest two-man wrenches. Fiber or metal packing is used under the nuts. Bolt holes should be drilled to a snug fit. New liners should be run dry with a light load for several hours, then with water as an indicator, and the bolts re-tightened as necessary before feed is turned in.

Backing is frequently used behind shell liners to prevent breakage with severe impact conditions or when cast-iron or thin alloy liners are used; it also protects bolts and shell from wear by sand which penetrates between liner blocks. One-inch plank is the usual backing material; zinc has been used in the FLAT RIVER mills and at BALMAT. Rubber in sheets 4×12-ft.×1/4-in. was used for the high-speed rod mills at TENNESSEE (*153 A 545*) because it gave a larger working diameter and correspondingly greater capacity.

Blocking is often employed behind the liners to reduce interior diameter. The usual procedure is shown in Fig. 16. The practice is more economical than simple removal of tumbling media when reduction in capacity over a considerable period is desired. It has also been followed in many cases when changing from pebble to ball loads, especially when fears were entertained as to the ability of the shell to carry full ball loads, or when insufficient motor capacity for the larger loads was available.

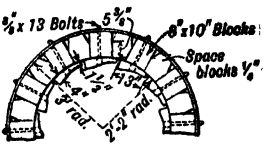

FIG. 16. Method of reducing diameter of a cylinder mill (*after Daman*).

Wear of ribbed liners, as reported for several hundred rod and ball mills, is highly variable, ranging from 0.003 to about 1.0 lb. per ton of new feed ground. When exceptionally high and low figures are discarded, the mean and average figures fall at about 0.25 lb. per ton for shell and end liners combined, scrap loss included. There is no difference between the wear figures for white-iron and alloy steels when these are taken for the plants as a group, probably because cast iron is used for the easy duties. Comparative wears and costs at particular mills are given in Tables 7, 8, and 9.

Table 7. Wear of shell liners at Mammoth (*After Howes*)

Mill	Type of liner *a*	No. of sets	New weight, lb., aver.	Life, days, aver.	Consumption, lb. per ton *l*	Relative consumption per ton
5×10-ft. open-end primary mill *m*	Block, solid *d*	1	20,331	92 *c*	0.394	100
	Block, slotted *b, d*	1	18,510	104 *c*	0.318	81
	Undulating, slotted *e*	1	20,908	63 *f*	0.593	150
	Special *g*	1	26,000 *h*	115	0.403	102
	Howes, slotted, gusseted *i*	1	18,606	120 *j*	0.277	70
	Howes, slotted *t*	5	17,950	128	0.250	63
	Howes, solid *t*	1	19,119	210 *k*	0.162	41
64 1/2 Marcy secondary mills *p*	Block, solid *g, q*	2	10,198	272	.....	100
	Shiplap, solid *r*	1	8,694	232	.....	100
	Shiplap, slotted *r*	3	8,366	241	.....	93
	Shiplap, spiral, solid *r*	1	8,700 *n*	252	.....	92
	Howes, slotted, narrow ridge *s*	1	7,515	221	.....	91
	Howes, slotted *t*	1	9,632	363	.....	71
	Howes, slotted *t*	1	9,632	383 *o*	.....	67

a All liners of manganese steel.

b To improve heat treatment, 1 1/4×12-in. slots were cast extending from the face to within 1 1/4 in. of the back of the liner; arranged longitudinally in three parallel rows, one at the center each of the plateau and the two valleys; 2-in. webs between the ends of slots; weight reduction, @ 9%.

c Thickness at discard: Ridge, 3-in. knife edge; valley, worn through.

d See Fig. 14, item *a*. Ridge, 4 1/4 in. thick, valley 2 1/4 in., new. Capacity abnormally low during first 3 weeks of life; appreciable improvement after leading edge of ridge had worn off.

e See Fig. 15, item *c*. Five rows of slots. Ridges 4 1/4 in. thick, valleys 3 3/4 in., new. (See note *b*.)

f Life of ribs, 4 weeks, during which time capacity was normal. Thereafter slip was excessive, capacity dropped 15%, the liners grooved circumferentially, and wear increased tremendously (3 1/4 in. wear in 5 weeks).

g Originally undulating, slotted. See note *e*. After 33 days' wear, manganese-steel lifters were plug-welded on, making essentially a block liner. *h* Estimated; see note *g*.

i See Fig. 15, item *c*. Gussets 5 1/2 in. wide and flush with the ridges at the top were cast across the valley at the third points. Two rows of slots, one down the center of each ridge.

j Wear over the gussets was 3/8 in. deeper than elsewhere, amounting to about 10% increase. The webs between the slots stood up above the remainder of the worn ridge.

k Increased wear due to elimination of spalling and peening at the edges of the slots. Consumption per ton of feed 59% less than with solid block liners.

l Including scrap loss.

m 560 tons per 24 hr.; rhyolite, andesite, and granite gangue, highly abrasive; feed, <1/2- or 5/8-in.; product, <8-m. Renewal balls, 4-in. forged steel. Speed, 80% of critical. Operation, closed-circuit with 8-m. screen. *n* Estimated. *o* Estimated after 293 days.

p Two mills in parallel closed circuits taking <8-m. Dorr classifier sands and grinding to 90% <65-m. Renewal balls 2 1/2-in. forged steel or 2/3 @ 2 1/2-in. and 1/3 @ 2-in. cast-iron. 80% of critical speed.

q Wear concentrated at joints and in valleys. Scrap loss high. Capacity low when new.

r Variation in capacity during life less than with block liners.

s Ridges too narrow (1 1/4 in. wide at top); they wore to a knife edge and peened over rapidly.

t Variation in grinding capacity during life slight. Ball consumption constant throughout tests in primary mill; 6% reduction in secondaries.

At the PRESIDIO mine (*W. E. Moore, PC*) Hardinge mills in primary service with 3 1/2-in. cast-iron ball renewals and Super-molychrome liners averaged 0.154 lb. total liner per ton in 1940 at a cost of 2.1¢ per ton. Average cost for the 5 years 1936 to 1940 was 2.2¢ per ton. Life was about 80,000 tons of new feed per set. Ball consumption was 2.04 lb.; cost 4.6¢ per ton. Consumption of white cast-iron liners in secondary tube mills was 0.40 lb. per ton at a cost of 1.8¢ per ton; 2 1/4-in. cast-iron renewal balls wore at the rate of 1.7 lb. per ton and cost 3.8¢ per ton. At a mill grinding moderately hard lead-zinc-pyrite ore, manganese-steel liners averaged 103,837 tons per set as against 113,476 tons for Super-molychrome (*PC*). C. F. Thompson (*PC*) states that in a 6×6-ft. Marcy mill on one ore, a set of manganese-steel step liners weighing 13,000 lb. treated 67,000 tons, or 0.19 lb. per ton; a set of block liners weighing 15,365 lb. ground 84,000 tons, or 0.18 lb. per ton; and a set of the same liners cast with pockets weighed 13,896 lb. and treated 98,000 tons, or 0.14 lb. per ton.

Table 8. Wear of manganese-steel end liners in 5×10-ft. open-end primary ball mill at Mammoth (*After Howes*)

Type of liner	Consumption, lb. per ton of new feed	No. of sets	Weight, new, lb. *f*	Life, days	Relative consumption per ton of new feed
Smooth *a*	0.040	3	1,800 *e*	80	100
Ribbed *b*	0.024	2	1,980	146	60
Multiridged *c*	0.022	1	1,730	142	54
Howes, slotted *d*	0.017	1	1,955	209	42

a Somewhat thicker at center when new.
b 12 radial ribs, 2 1/2 in. wide, 1 1/2 in. high.
c Light ribs radiating to the ridges of the Howes shell liners.
d Ribs of width equal to those of Howes shell liners (@ 4 in.) with V-section valleys, radiating to ridges of Howes shell liners.
e Estimated.
f One end only.

Wear increases more rapidly, in general, with increase in speed and mill diameter than capacity does. It increases, normally, with decrease in pulp density, with increase in size of feed, with decrease in height of discharge, with increase in diameter and in hardness of tumbling media, and, of course, with increase in hardness of ore. Variation with design of liner has been described (see also Tables 7 to 9).

Table 9. Ball-mill liner wear at one plant *a* (*PC*)

Material	Total weight	Total cost	Cost per lb.	Days run	Tons ground, total new feed	Cost per ton ground	Lb. per ton ground	Scrap loss, %	R.p.m.
White iron	17,500	1,050.00	0.060	137	22,583	0.0465	0.775	50	26
White iron	17,500	1,050.00	0.060	99	34,000	0.0309	0.515	50	26
Super-molychrome	18,480	1,755.60	0.095	122	38,300	0.0458	0.482	42	26
Alloy 18	20,024	2,070.44	0.105	152	51,030	0.0405	0.392	36	24 1/2
Ni-hard	18,400	1,974.25	0.107	213	75,400	0.0263	0.246	37	24 1/2
Ni-hard	19,958	1,995.80	0.100	153	47,270	0.0422	0.422	40	24 1/2
White iron	17,500	1,050.00	0.060	123	23,438	0.0449	0.746	50	26
Manganese steel	21,910	2,331.23	0.106	202	66,836	0.0349	0.329	36	24 1/2

a Mills, 7-ft. × 48-in. Hardinge; 28,000-lb. ball load; replacement by addition of 4-in. forged-steel balls; grinding from <1-in. to 28 *mog*; ore, soft relatively.

Comparative wear of liners. Shell-liner wear is greater near the head end of the longer primary mills, wear of feed-end liners is generally greater than that of discharge-end, and wear near the center of the feed-end liners greater than that near the periphery. Thicknesses should be adjusted accordingly.

At HOLLINGER (*HS*) the life of the 3 1/2-in. outer head-end ring was 250 days; inner, 125 days; discharge-end annular lip, 750 days. At WALKER MINE (*IC 6555*) consumption of manganese-steel shell liner was 0.27 lb. per ton as against 0.18 for feed-end liner. At MAGMA (*IC 6319*) manganese shell-liner wear in primary service was 0.15 lb. per ton and head-end wear 0.05 lb.; in secondary mills the corresponding figures were 0.06 and 0.03 lb. and 0.04 lb. at the discharge end. MIDVALE (*IC 6492*) reported 0.19 lb. for manganese shell liners and 0.02 lb. for manganese or chrome ends.

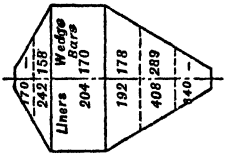

FIG. 17. Comparative life (days) of cast-steel liners and wedge bars in different parts of a conical ball mill.

Comparative wear in different parts of a conical mill is shown in Fig. 17 (ENGELS *IC 6550*). At MT. ISA (*IC 7073*), comparative lives were as follows: Primary mills: feed cone, 1.0; cylinder, 1.07; discharge cone, 1.28. Secondary mills: feed cone, 1.0; cylinder, 1.14; discharge cone, 1.28. Secondary: primary = 1.28 : 1. At TYRO (*IC 6480*) the consumption in the feed cone was more than twice that in the cylinder.

Liners for fine grinding are shown in Fig. 18. SMOOTH-PLATE LININGS are usually from 1 to 2 in. thick. They may be drilled for bolting directly to the shell or be of wedge-bar type as item *a*. Plates give the largest possible internal diameter in the mill. They tend to wear into circumferential grooves, after which grinding normally improves.

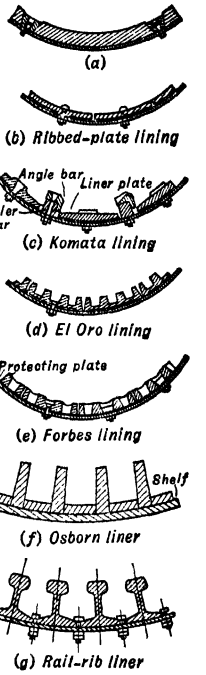

FIG. 18. Liners for fine grinding.

Smooth white-iron plates, 1 1/4 in. thick, 8 in. wide, and 48 in. long in a 5×22-ft. mill taking 2 1/2-m. feed at the BUTTERS VIRGINIA CITY mill lasted 9 mo., which was as good as the El Oro would do, and the plate lining was the cheaper (*89 J 905*). At RAINBOW mill (*99 J 1104*) the 1 1/2-in. cast-iron feed-end liner lasted 6 mo. The discharge-end liner lasted longer; 1 1/2-in. shell liners lasted 13 mo. Relining required 14 hr.

Cost of smooth liners and other wearing steel in HOLLINGER ball mills (*HS*) was as follows: Shell liner, Mn steel, life 297 da., $15.54 per day; head-end liner, Mn steel, $2.00; discharge end, Mn steel, $0.34; grates, cast iron, first cost, $0.17; grates, resurfacing with hard alloy, $0.90; scoops, lips, $0.22; scoops, lining, $0.29; total $19.46 per day or 1.36¢ per ton.

Circumferential grooving indicates frictional drag at the outer surface of the outer layer of balls, and is definite proof of sensible slip, with consequent decrease of energy input to the load. The fact that the rate of wear decreases and grinding capacity rises after the grooves have worked into an originally smooth liner is due to increase in effective spin-producing contact of the ball races in the liner with the outer balls. Circumferential grooving does not occur with flint pebbles and metal liners.

Black liner is a plate liner cast with circumferential grooves spaced to accommodate the largest renewal balls. Tests at WRIGHT-HARGREAVES, which led to its adoption there, indicated an advantage in capacity upon the installation of new liners as compared with new smooth liners (before grooving had occurred by natural wear). The same advantage was reported from LAKE SHORE (*LSS*). At CHINO they were tried on <1/2-in. feed when grinding to 65 *mog* with 3-in. balls and were found to be not so satisfactory as wave liners.

Ribbed-plate liner (Fig. 18, item *b*) or a wedge-bar plate liner with only a slight projection of the wedge bar is used when it is desired to increase lift or decrease onset of circumferential grooving.

Komata lining is substantially a ribbed-plate lining with replaceable ribs. See Fig. 18, item *c*. It was first introduced in New Zealand and used almost exclusively there both for pebble charges and for ball charges up to 3-in. size, both wet and dry grinding (*24 CMI 192*). It is made up of plate liners alternating with rib liners about 18 to 20 in. apart. The rib bars are made up of two parts, a cast-iron base and a special steel wearing top that is reversible and readily replaceable. In one type (wedge-bar) the rib bars are wedge-shaped and hold in the plates so that the number of bolts is reduced. Plates are 3/8 in. thick at the edges and 1 in. at the center. Maximum wear comes on the angle bars and the use of separate wearing parts effects a considerable economy in the amount of metal that must be discarded. Raised bosses are provided around the bolt holes to prevent cupping, and joints in the bars are staggered to prevent circumferential grooving. With cast-iron plates a low boss is put on the back to protect the plate against breakage when the bolts are tightened. Brown, the inventor, recommends (*104 P 206*) lower speed and lower pebble load than with smooth liners of the El Oro type on account of the greater lifting effect of the ribs. At TONOPAH BELMONT (*52 A 112*) Komata manganese-steel lining cost (1913) $1,785 installed, including $145 for labor. After 16 1/3 mo. new ribs were put in at a cost of $273 and lasted 10 mo., when the whole lining was removed. Cost per ton ground for this lining was $0.0457. A locally cast hard white-iron ribbed liner costing $712 in place lasted about 2 yr. and cost $0.0173 per ton. Silex (4×4×8-in. blocks) cost $396 in place and lasted 8 mo., making the cost $0.0583 per ton ground.

Silex lining is a smooth lining composed of blocks or bricks of hard flint, normally 6 to 9 in. long, 4 or 5 in. wide, and from 2 to 4 in. thick. It is used only with pebbles. Uniformity in thickness is the important requirement, but considerable variation in length and width is allowable. The blocks are cemented into place with Portland cement. Joints are staggered to prevent circumferential grooving.

A 5 1/2×22-ft. mill on the RAND has been relined in 18 hr., but the usual time is 24 hr. from stopping to re-starting, including 4 hr. steaming (*RMP*). The cost of installing silex lining (4×4×8-in. blocks) in a 5×18-ft. mill at TONOPAH BELMONT in 1913 (*52 A 112*) was: Silex, 12,300 lb., $258; cement, 33 sacks, $36; labor, $102; total, $396. Silex lining can be worn down to 1 1/2 or 2 in. before it is necessary to replace it. Average life on the Rand was from 60 to 150 days, depending on the thickness and the conditions of operation. At the TREASURY mine (*So. Af. Ass'n Eng'r's, Apr., 1905*) silex lining lasted 2 1/2 times as long as smooth cast-iron and cost half as much. With thick blocks, which have the longer life, the diameter of the mill is materially decreased when the blocks are new as compared with the

diameter when the blocks are old and there is consequently a marked change in peripheral speed of the mill during the life of the liner. With a new liner, horsepower, pebble capacity, grinding capacity, and grinding efficiency are less than with a worn or thinner liner. It is necessary, therefore, to balance the cost of more frequent renewals attendant upon the use of thinner blocks against the decreased efficiency in the early part of the life of thick blocks. To compensate for greater wear at the feed end one plant (*7 JCM 368*) lined the first 7 ft. with 8-in. block, then 7 1/2-in. for 1 ft., 7-in. for 1 ft., and 6-in. for the balance of the length. IRONITE is similar to silex, except that the material used consists of blocks of hard trap rock. In some localities where hard, close-grained rocks are obtainable locally, these are used in place of silex. Silex was more generally used than plate liners. The principal DISADVANTAGES of the stone-block type of liner are the great reduction in mill volume and the variation in volume, power consumption, capacity, and efficiency between new and old liners. These are sufficient to bar such liners in most modern ore-treatment plants, but their use is commonplace in grinding nonmetallics when contamination with iron would be undesirable.

Barry lining consists of silex blocks cemented into a sectional iron honeycomb.

Plymouth lining (*101 J 263*) is made of pieces of semi-steel battery liner, roughly 4 in. wide and 12 to 36 in. long, and pebbles, cemented in.

A special lining for a 4×10-ft. ball-tube mill at LIBERTY BELL was made by cementing in alternate courses of 1 3/4×2×5×48-in. hard-chilled cast-iron bars and 4 1/2×5×8 1/2-in. quartzite blocks, set with the 4 1/2-in. dimension radial; no bolts were used. For one lining, 200 quartzite blocks, 42 ribs, 9 sacks of cement, and 9 sacks of sand were required. Consumption was 0.65 lb. quartzite and 1.25 lb. iron per ton of new feed.

El Oro, Forbes, Osborn, and Komata liners have been widely used in American mills. El Oro liner (Fig. 18, item *d*) consists of grooved plates bolted to the shell of the mill, the width of the grooves being about the medium dimension of the larger pebbles used. In operation these larger pebbles wedge into the grooves and the liner surface soon becomes an irregular one of pebbles that protect the metal ribs from wear. As pebbles wear down and are broken they fall out and are replaced by other pebbles. El Oro liner plates are made of cast iron, cast steel, or special steels.

Osborn liner (Fig. 18, item *f*) is a modification of the El Oro in which hard-steel ribs are wedged into place by mild-steel wedges, both being set in cement mortar. There are no bolts. Pebbles fill the spaces between the ribs and take most of the wear. This liner was much used in South Africa. At SIMMER AND JACK (*RMP*) a mill with Osborn liner had a duty of 139.5 tons containing 57.2% <90-m. while an adjoining silex-lined mill ground 133.5 t.p.d. to 54.6% <90-m. Ribs wear most rapidly at the fed end and after initial wear at this end are reversed. Sectional bars (three lengths to a course) permit more economical replacement for head-end wear. Life is about 300 days. One man can reline in 12 hr. (*97 J 465*).

Forbes lining (Fig. 18, item *e*) is the same in principle and similar in appearance to the El Oro lining. It differs from the El Oro in that the plates are cast in the form of a curved grid and are bolted against a back plate that protects the shell at the bottom of the openings in the grid. Life at NEVADA PACKARD in a 6×10-ft. mill making 75% <200-m. was 345 days as compared with 220 days for a step liner of approximately the same weight.

Globe lining (*98 J 393*) is of the general El Oro type but with circumferential grooves tapering toward the base and also tapering longitudinally in a direction opposite to the direction of rotation. The original pebble load should be a good mixture of all sizes in order to insure quick filling of the liner grooves. Life at HOLLINGER was reported as 3 mo. greater than that of El Oro lining. Weight of metal for a 5×20-ft. mill is 15,500 lb. Relining requires 6 men 12 hr.

At HOLLINGER (*HS*) side-by-side tests were made on different liners with 6×16-ft. pebble mills. Once optimum speed was established, no difference in capacity was observed with Globe, El Oro, Cobalt pocket, or smooth liners.

Fig. 18, item *g* (*122 P 465, 112 J 778*) shows a lining made of steel rail, designed to pick up a ball layer in the same way that the El Oro lining picks up pebbles. Lining for a 6×5-ft. grate mill using 4-in. balls and crushing <1-in. material is composed of 50-lb. re-laying rails with 7/8-in. bolts. A complete liner cost about $250 (1921), which was one-tenth the cost of a manganese-steel liner. It lasted 5 mo. on open-circuit work grinding to <1/8-in. The cost of balls lodged in the liner must also be charged. A similar lining in a 5×6-ft. center-discharge regrinding mill (<1/8-in. to 95% <100-m.) lasts about 15 mo. using 2-in. balls. A white-iron plate lining in the same mill lasts about 5 mo. and costs twice as much.

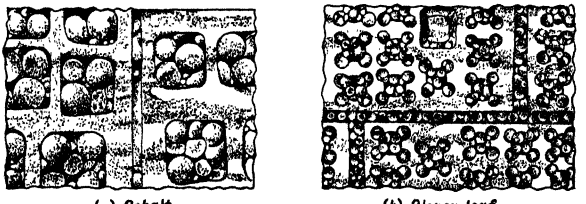

(a) Cobalt *(b) Clover-leaf*

FIG. 19. Pocket liners.

Pocket liners are castings with steep-walled pockets in which the grinding media wedge. The Cobalt liner has square pockets (3 to 4-in.) distributed as shown in Fig 19, item *a;* the clover-leaf liner has smaller pockets shaped and arranged as in item *b*. It is reported

from LAKE SHORE (*LSS*) that at proper speeds grinding capacity with pocket liners in a given mill is not different from that with smooth liners. Step or shiplap liners with longitudinal slots in the heel tend to pick up balls and maintain a roughened surface along the line of the step.

Britannia lining (Fig. 20) consists of 3 to 4-in. pieces of old railroad rails set on end in cement.

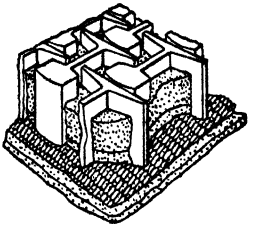

FIG. 20. Britannia liner.

Line the mill in sections as follows (*99 J 239*): First spread a layer 1 in. thick of cement mortar (1 cement to 2 of sharp, clean sand), press down sections (not to exceed 1 × 2 ft.) of 4- to 8-m. wire screen, then a second 1-in. layer of mortar into which the rail ends are forced as far as possible, then more mortar to within 1 in. of the top of the rails. Allow to set, then turn the mill to line another section. When starting up, run for a few hours with lump ore but no balls or pebbles to allow crevices to fill. Cement wears sufficiently more rapidly than steel so that the ends of the rails project and make the lining surface irregular. In later practice with larger mills at BRITANNIA (*IC 6619*) the rail was hot sawed in 7-in. sections and hardened by quenching. It was removed at 2 to 3-in. thickness after 2-yr. life.

Rail-cement lining used for 6 or 10-m. and finer feeds at UTAH, RAY, and CHINO comprises the same arrangement of 6 or 7-in. @ 90-lb. rail sections for the shell as is shown in Fig. 20 except that the wire reinforcing is omitted and the cement is filled in flush initially.



FIG. 22.

Fig. 21 shows the same lining applied to the head, graded radially for severity of wear. Fig. 22 shows a modification of the shell lining for longitudinal setting of the rails.

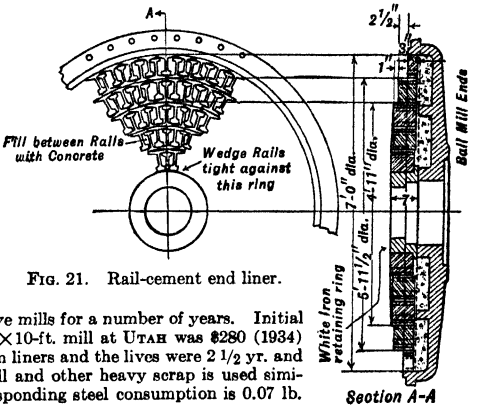

FIG. 21. Rail-cement end liner.

These linings have been used at the above mills for a number of years. Initial cost of the rail liner (Figs. 20, 21) for a 7×10-ft. mill at UTAH was $280 (1934) as against $1,100 for a set of white cast-iron liners and the lives were 2 1/2 yr. and 1 yr. respectively. At RAY scrap roll-shell and other heavy scrap is used similarly and a life of 2 yr. is reported; corresponding steel consumption is 0.07 lb. per ton.

Rubber liners were tried as early as 1923 (*116 J 489*), with promising results. Considerable experimental work was done over the following 2 years, comprising the trial of wave and smooth forms, various methods of installation, and thorough exploration of operating conditions. Pure gum rubber was found to be superior to any vulcanized compositions tried. No fully satisfactory method of holding the liners in place was found. Utility was definitely limited to fine feeds, cascading speeds, small balls or pebbles, and thick pulps.

Table 10. Rubber *vs.* steel liners in an 8-ft. × 48-in. conical mill at Consolidated Mining & Smelting Co.

	Steel liner	Rubber liner	
Speed, r.p.m.	18.1	18.1	20.4
Tons new feed per hr.	98.2	96.0	99.4
Horsepower consumed	123.2	98.7	117.3
Per cent. solids	76.1	77.8	76.8
Per cent. <200-m. in feed	36.8	36.8	35.2
Tons <200-m. produced per hr.	7.0	6.1	6.5
Tons <200-m. produced per hp-hr.	0.058	0.062	0.065

Summary of a test at CONSOLIDATED MIN. & SMELTING CO. (HARDINGE CO., *PC; 33 CEMR 139*) is given in Table 10. The power consumption indicates greater slip with the rubber liners; the drop in production of <200-m. with the rubber liners is roughly proportional to the fall in power draft, although a slightly higher efficiency is indicated for the rubber. No properly comparative data on wear are available, but the indications are that the life of the rubber, even assuming non-collapse of the lining, is not sufficiently greater than that of steel to compensate for the great difference in price. The complete lack of adoption over a period of 20 years is convincing evidence of the present superiority of the metal liners.

Choice of liner is based on the kind of tumbling medium, the charge action desired, the sizes of feed and product, the hardness and toughness of the ore, the relative importance of capacity and grinding efficiency, availability of materials, and cost. Any one factor may predominate in a given case. In general, ribbed liners are used for coarse feeds, non-ribbed for fine products, and smooth for ultra-fine products. Alloy steels are used when impact loading is heavy, cast iron or the self-renewing (El Oro) types for light loading, *i.e.*, small or light media and/or noncataracting speeds. High freight rates combined with local availability of metal scrap encourages the use of cast-iron or cemented-scrap linings. When high capacity is important, alloy linings are usually used on account of their capacity to withstand severe operating conditions, and the longer intervals between relining. Per-ton cost of liner is relatively small in any case, and is determining only when the operation is large and has settled down to the point where fractions of a cent per ton ground are important.

6. TUMBLING MEDIA

The tumbling load is the working part of the mill. It draws substantially the same amount of power whether it does any useful work or not. The amount of useful work that it does differs with the shape of the tumbling bodies, their size relative to the grains being ground, their quantity, and the kind of material they are made of. Loss by wear is one of the principal items of grinding expense. Hence all of these items are of vital importance to efficient operation.

Shape. Cylindrical rods, spherical balls, and, to a lesser extent, rounded pebbles are the media used in substantially all mills today. Practically all conceivable shapes have been suggested and many of them tried over the past 20 years' present-day practice represents survival of the most effective and at the same time the cheapest to provide.

Shape determines interstitial volume of the load and thereby affects both medium weight and ore weight per unit of struck volume of load. Rods occupy the greatest percentage of struck volume, spherical balls the least. Hence rods exert greater pressures at a given depth of loading than balls. They also give a shorter in-mill time per pass for a given throughput, all other things being constant.

Cascading individual rods strike heavier blows than balls because of their greater mass. On the other hand, when the avalanche effect in a cascading load is considered, it is not improbable that greater concentration of load occurs with balls. The same is not improbably true in the rubbing zone. The added mechanical advantage of free-fall hammering is not availed of with rods on account of the tendency for the load to tangle at cataracting speeds. Rods should be given more end clearance with coarse than with fine feeds to overcome an increased tendency to tangle.

Experience indicates that rods are superior to balls for feeds in the range from 1/2-in. to 1-in. maximum when the mill is not called upon to finish at sizes finer than 14-m. Balls are superior at coarser feed sizes or for finishing 1-in. feeds to 28 *mog* or finer, because the mill can be run cataracting and the large lumps broken by hammering.

Surface is the characteristic of the medium that predominates in fine grinding. BALLS have, of course, greater surface per unit of weight than rods and excel them for fine finishing. CUBES (*Norges Tekniske Hoiskole (1935) 581*), tetrahedra, and irregular worn balls (*CEG*), cones and disks (*124 J 695*), all of which have greater surface per unit of individual weight and of charge weight than balls, have, however, proved less efficient in fine grinding. The reason lies, probably, in the decreased rubbing activity in the load. The irregular shapes draw more power for a given speed. Coghill and deVaney found that worn and irregular balls from an old load were about 6% less effective in surface production than new small balls. Rose (*123 J 49*) tested hexagonal rods. He found some evidence of a more granular product when the rods were new but found that they soon wore to perfect cylinders.

Size of media most suitable for a given tumbling mill in a given service has provoked more discussion than any other characteristic of the tumbling charge, and is still today far from established. Certain facts are known, *viz.*,

1. In an operating mill a seasoned charge, containing media of all sizes from that of the renewal or replacement size down to that which discharges automatically, normally produces better grinding than a new charge. It is inferred from this that a charge should be rationed to the mill feed, *i.e.*, that it should contain media of sizes best suited to each of the particle sizes to be ground. But Davis (*134 A 294*) and Coghill and deVaney (*CEG*), conclude from laboratory work that a range of ball sizes is unimportant or actually inferior. Usual practice is, however, to charge a new mill with a range of sizes, approximating on some basis or other, some seasoned load; to thereupon make periodic renewals, at various sizes dependent upon the character of the circulating load (see following para-

graph), until optimum grinding is attained; and thereafter to make required renewals at the maximum size.

Davis (*61 A 250*) reported experiments which he interpreted to indicate that the wear from a given ball is proportionate to its weight, *i.e.*, to d^3 (d = diameter). Bond's interpretation of Davis' data and later available material adopts the relation wear $\propto d^{2.3}$ (*153 A 373*). Prentice (*43 JCM 99*) reported an exhaustive series of wear tests in a 2 1/2 × 1 1/2-ft. cylindrical ball mill, with smooth liners, run at cascading speeds on Rand ore, but not with truly seasoned tumbling charges, nor with charges homogeneous in metallic character. His results indicated wear to be proportional to d^2. He cites sizings of seasoned loads from large Rand mills, operated cascading, that certainly fall much nearer to the predictions of the d^2 than to the d^3 rule; his citations are supported by those of White and of Clemmes in discussions of his paper. Prentice points out that the HOLLINGER sizing (*HS*), there interpreted as supporting the Davis rule, actually supports the d^2 rule.

From the mechanics of ball tumbling, established by Haultain and Dyer (Art. 2), it certainly follows that, in a cascading load, the superincumbent weight on the rubbing surfaces is independent of the diameter of the balls composing the tumbling mass, and is limited at any instant principally to the ball-to-ball and ball-to-liner near-contact areas in which grinding is being done, from which it follows that the wear on an individual ball is statistically proportionate to the extent of its surface, *i.e.*, to d^2. When a mill is run cataracting, however, the balls wear not only as in a cascading load, but also at the impact near-contact areas with the liner on the rising breast and with the balls at the surface of the toe. Here the forces prevailing at impact are proportional to mass × velocity of the cataracting balls, *i.e.*, to $d^3 \times d^{1/2}$. The combined wears in a cataracting load must, therefore, lie somewhere between d^2 and $d^{3.5}$, approaching one or the other limit the more closely according to the approach to critical speed. Davis' tests were, presumably, judging from the then-prevailing practice and the balance of his paper, run at cataracting speeds. Bond's data correspond to an integration of modern practice in which the proportion of the load which cataracts is relatively small.

Davis postulated that, once the distribution in the seasoned load is determined, it can be obtained by proportioning the new charge according to the equation $W = (d_1^3 - d_2^3)/d_0^3$ where W = decimal fraction by weight of desired size of ball in charge; d_1 and d_2 are the upper and lower limits of the desired size interval, and d_0 is the diameter of the renewal ball, and thereafter renewing with balls of the maximum size. The formula has been verified in practice by HOLLINGER (*HS*) and LAKE SHORE (*LSS*). For application of the Bond relation see Paragraph 4 below.

2. A coarse feed requires larger media than a finer feed. This is ordinarily explained either on the ground that large feed particles require heavier impacts, or that media of larger diameter are necessary to effect nip. It is true that if a circulating load tends to build up in the coarse end, the condition can be more or less corrected by increasing the size of renewal media (or increasing speed), while if there is a build-up in the near-finished sizes, charging of smaller renewal media is normally an effective remedy.

On the basis of the relationship thus indicated, Coghill and deVaney propose the equation $D^2 = Kd$ to determine optimum ball size for grinding a short-range feed through a given limiting screen, where D = diameter of ball and d of the coarser feed particles, both in inches, and K is a constant depending upon the grindability of the material (Art. 14) and equal to 55 for chert (very hard) and 35 for dolomite (soft medium).

Practice shows no consistent relationship between size of medium and limiting feed size. For 50 ball mills the ratio of renewal-ball diameter to nominal limiting feed size ranged from 2.5 to 130, averaging 20, with the mean at 14; range in nip angle, on the basis of balls in contact, was 14 to 89°, average 48°, mean 43°. For 21 rod mills the diameter ratios were: range 1.5 to 46, average 11, mean 4; nip angle, range 24 to 106°, average 62°, mean 47°. Since practice normally represents a distillate of long-time small-step experimentation, the width of the ranges reported and spreads between averages and means indicate a definite lack of dependence in practice between maximum diameter of tumbling body and limiting-feed size. In general, however, renewal rods in primary mills are 3 to 4-in. diameter, and 1 1/2 to 2-in. in secondary; in primary ball mills renewals are at 2 1/2 to 5-in. in diameter; in normal secondary service 1 1/2 to 2-in., and in ultra-fine secondary and tertiary circuits as small as 1 or even 3/4-in. Johnson (*D, 153 A 333*) stated that in the latest large-scale test work, *viz.*, at MORENCI (1938–1940), it was found that 2 1/2-in. balls were large enough for 3/4-in. feed in 10-ft. mills. In general, the largest ball should be the smallest that will do the work, because both ball and liner wear increase with ball diameter. Pebble renewals in fine-grinding are normally at about 3-in. but when mine rock is used for the tumbling load it may be charged as coarse as 8-in. For commercial sizes of pebbles see Table 21.

3. The smaller the *mog* the smaller the optimum diameter of medium. This relationship is attributed to the fact that fine product is produced most effectively by rubbing, whence maximum capacity to fine sizes is attained by maximum rubbing surface, *i.e.*, with small balls. A practical limitation is imposed by the tendency of balls which are too small to "float" out of the mill, and by the high percentage of rejects when renewals are too small.

On the basis of this relationship the majority of operators ration ball charge primarily to the *mog* on some ground which may be rationalized statistically on the basis of nip angle at *mog* diameter. Curves showing approximate relationships between *mog* and nip angle for 50 ball mills and 21 rod mills are presented in Fig. 23. At LAKE SHORE (*LSS*) decrease from 1 1/4-in. to 3/4-in. in the size of renewal

Table 11. Laboratory grinding tests with balls of different sizes on sands of different sizes at Lake Shore (*LSS*) *d*

Mesh	10	20	35	65	100	150	200	250	325	<325
					Weight, % retained					
Feed *b*	1.4	15.7	26.9	21.0	10.5	6.7	5.6	3.2	2.1	7.0
1 1/4-in. ball charge *a*				0.9	9.0	14.3	15.8	8.5	7.8	43.8
3/4-in. ball charge *a*		0.8	0.5	1.0	4.8	11.7	17.8	10.0	8.8	44.6
1/2-in. ball charge *a*	1.2	8.0	8.4	5.4	3.8	4.2	5.9	5.8	4.9	52.4
Feed *b*		2.3	30.0	26.6	13.8	9.4	7.8	3.6	1.4	5.1
1 1/4-in. ball charge *a*				0.8	6.6	13.6	16.8	9.0	8.2	45.1
3/4-in. ball charge *a*				0.5	5.2	11.3	14.8	9.0	8.1	51.1
1/2-in. ball charge *a*		0.3	3.8	4.7	5.1	6.6	11.3	8.1	6.2	53.9
Feed *b*				9.7	17.5	17.1	19.0	16.0	8.5	12.2
1 1/4-in. ball load *a*				0.2	4.4	7.0	13.0	13.7	11.7	50.0
3/4-in. ball load *a*				0.2	5.8	6.2	8.2	10.6	11.9	57.1
1/2-in. ball load *a*				0.8	0.5	0.6	4.2	9.7	15.4	68.8
Mesh			42	60	80	115	170	250	325	<325
Feed			1.3	1.7	5.7	19.0	20.3	36.0	9.5	6.5
1/2-in. ball charge *c*			0.1	0.2	0.2	1.3	2.2	14.7	13.5	67.8
1/4-in. ball charge *c*			0.4	0.8	1.7	5.2	5.4	21.0	12.8	52.7
1/8-in. ball charge *c*			0.5	1.5	3.1	17.7	18.0	37.3	4.3	17.6
1/2-in. ball charge *b*			0.4	0.3	0.6	2.3	2.1	20.2	13.8	60.5
1/4-in. ball charge *b*			0.6	1.0	2.5	6.7	6.8	24.2	11.0	47.2

a Ball distribution: Size, in	1 1/4	1	3/4	1/2	1/4	1/8
1 1/4-in. charge, % weight	54.5	26.0	13.5	5.0	1.0	.....
3/4-in. charge, % weight	.....	.....	79.5	18.5	2.0	.....
1/2-in. charge, % weight	.....	.....	.....	78.0	19.0	3.0

b Pulp, 70% solids. *c* Pulp, 63% solids. *d* 20-mm. batch grind.

balls in 5×16-ft. tube mills grinding to 56-μ *mog* increased capacity of the mills 23.5% with an increase in ball cost of 7.1%. The same increase accompanied the same change in laboratory mills grinding the same feed. (See Table 11.) These experimenters found further that the curve of performance, although relatively flat over the range of 0.8 to 1.1 times the optimum diameter, fell rapidly outside these limits. At HOLLINGER (*HS*) decrease in renewal size of balls from 3-in. to 2 1/2-in. with <3/8-in. feed and 48 *mog* increased capacity of a 6 1/2×14 1/2-ft. mill from 1,430 tons new feed per day to 1,507 or 5.4%, with no other change in conditions or results (see Table 5).

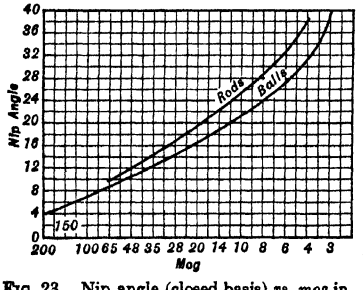

FIG. 23. Nip angle (closed basis) *vs. mog* in tumbling-mill practice.

4. The harder the ore the larger the ball needed, all other things being equal. Recognition of this fact is reflected in the values of the constant in the Coghill and deVaney equation above. Bond (see below) reports a similar relationship.

Rationing of tumbling charge as practiced is described in paragraph **1** above. Bond (*153 A 373*) has proposed an analytical method, based on a modification of the relationship of ball wear to ball weight established by Davis (p. 27).

Symbols:

A = Nip angle for two balls of the same diameter in contact.

B = Optimum ball-size differential = minimum difference in the Stadler number of an ore particle and that of the ball necessary to break it efficiently. The value of B for a 6-ft. mill wet-grinding ore of medium hardness is approximately 4, for an 18-in. laboratory mill 7, and for a 12-in. laboratory mill 8; for hard ores add 1 to the value for a medium ore.

b = Subscript = ball.

C = Area in sq. cm. within which two balls of diameter d_b in contact will nip a particle of diameter d_p.

F, D = Subscripts denoting renewal-ball and reject-ball diameters respectively. N_D is taken here = 55, or about 1/2-in. rejects.
d = Diameter in cm.
K_1 = A constant for a definite amount of grinding.
K_2 = A constant for the production of a specific amount of new surface area.
m = Slope of Gaudin distribution line (Sec. 19, Art. 19) for balls of equilibrium (= seasoned) charge.
N = Stadler number of sieve that just passes a ball of diameter indicated by subscript letter.
n = Stadler number (Sec. 19, Art. 19).
O = Subscript = optimum.
P_F = Theoretical per cent. by weight of equilibrium charge that would be indicated on screen N_F, if the distribution line were extended to that ordinate.
P_n = Per cent. by weight of equilibrium charge retained on a screen with Stadler number n and not retained on one with number $n + 1$.
p = Subscript = particle.
S = Surface area in sq. meters per 100 cc. of metal in ball charge.
W = Grams weight loss of any ball for a definite amount of grinding.
W_T = Grams weight loss per ton of balls for the production of a specific amount of new surface area.

Equations:

$$n_{bd} = 6.64\ (\log d + 8.07) + 1 \tag{1}$$

$$\log W = 0.345n + K_1 \tag{2}$$

$$P_F = \frac{79.4}{0.672 - \dfrac{1}{\text{antilog}\ [0.345(N_F - 55)]}} \tag{3}$$

$$\log P_n = 0.345(n - N_F) + \log P_F \tag{4}$$

$$S = \frac{157{,}800 P_F}{2^{1/2(N_F - 1)}} \{0.799 - \text{antilog}\ [0.194(55 - N_F)]\} \tag{5}$$

$$\log W_T = K_2 - 0.107n \tag{6}$$

$$d_{bo} = 2^{B/2} d_p \tag{7}$$

$$B = 6.64 \log \frac{d_b}{d_p} \tag{8}$$

$$C = \frac{\pi d_b d_p}{2} \tag{9}$$

$$C_o = \frac{\pi d_b^2}{2^{B/2} + 1} \tag{10}$$

$$\text{Cos } A = \frac{1}{1 + \dfrac{1}{2^{B/2}}} \tag{11}$$

Example. To determine initial and equilibrium ball charges for grinding <1 1/2-in. feed to 65 *mog* in a 7-ft. mill at 20 r.p.m. in closed circuit with a classifier.

A summary of the calculated data is given in Table 12. Screen analysis of the mill feed (new plus circulating) with Stadler numbers of the sizing screens are given in columns 1 to 3. Stadler numbers of limiting screens for balls are given in column 4. The basis for their magnitude is that test has shown that $B = 4$, whence $N = n_p + 4$. The factors in column 5 are based on an analysis (see original paper) indicating that optimum distribution of sizes N in the ball charge is attained when the cumulative per cent. of a given size of ball in the charge is obtained by multiplying the cumulative per cent. of the corresponding size ($n_p = N - B$) in the composite feed by the factor. The factors are obtained by making the factor for the largest ball = 1 and deriving each succeeding factor by multiplying the preceding factor by 1.29. Cumulative size distribution of the optimum ball charge (column 6) is then obtained by multiplying the values of column 3 by those of column 4 until the indicated percentage exceeds 100. The daily feed that it is necessary to make in order to attain an equilibrium charge that will approximate the optimum charge is obtained by dividing the percentage of the largest ball in the optimum charge (22% of 5-in. in Table 12) by the percentage of this size found in an equilibrium charge attained by constant feed of this largest size only. Values for such charges are given in Table 13. For 5-in. renewal size the value is 31.7. Hence 69.4% of the renewals should be 5-in. These will wear to equilibrium percentages of the total load in the present mill as shown in column 7, Table 12, derived by multiplying the tabular values for 5-in. balls in Table 13 by 0.694. The excesses in column 7 above the values of column 6 cannot be remedied. Deficit, as for sizes 59 and finer, are made up by addition of smaller balls. In the instant case the deficit is taken up by adding 2-in. balls, applying the multiplier 0.306 (= 1 − 0.694) to the equilibrium values for 2-in. balls (Table 13), giving the values in column 8. Column 9 is the summation of columns 6 and 7, and is supposed to represent the seasoned charge that would result from a daily feed of 5- and 2-in. balls in the proportions taken in Table 12. The initial ball charge, made up from standard sizes, which most closely approximates the equilibrium charge of column 9, is given in columns 10 and 11.

The charge is determined by plotting the cumulative per cent. weights of column 9 against the values of N in column 4, smoothing the best curve through the points, sliding the scale of ordinates one-half unit to the right, and reading cumulative weights corresponding to the values of N for the commercial sizes of balls, as taken from Table 13, against the shifted scale, except that the value for the coarsest size is taken as one-half the value read, and the remaining half is added to the weight of the second size.

Table 12. Calculation of initial ball charge (*After Bond*)

1	2	3	4	5	6	7	8	9	10	11
Feed			Ball charge							
Mesh	Stadler No. of screen, n_p	Composite Feed, cumulative % retained	Stadler No. of ball, N (B=4)	Factor	Optimum ball charge, cumulative % retained	Daily feed		Equilibrium ball charge, cumulative % retained	Initial ball charge	
						5-in. balls (69.4%)	2-in. balls (30.6%)		Size, in.	weight, %
1 1/2-in.	59	0.0	63	....	0.0	0.0	.....	0.0	5	10.5
1.....	58	22.0	62	1.00	22.0	22.0	.....	22.0	4 1/2	14.0
3/4 ..	57	29.5	61	1.29	38.1	48.1	.....	48.1	4	8.5
1/2...	56	35.2	60	1.67	58.9	59.8	0.0	59.8	3 1/2	9.0
3/8...	55	38.2	59	2.16	82.7	65.2	15.0	80.2	3	9.5
3-m....	54	40.6	58	2.79	.....	67.6	23.9	91.5	2 1/2	11.0
4.....	53	42.3	57	3.61	.....	68.6	28.0	96.6	2	12.0
6.....	52	43.5	56	4.67	.....	69.0	29.8	98.8	1 1/2	12.0
8.....	51	46.8	55	6.04	.....	69.4	30.6	100.0	1	13.5
10.....	50	49.7	54	7.81	.....	.....	.....	.....	.....	.....
14.....	49	51.7	53	8.02	.....	.....	.....	.....	.....	.....
20.....	48	53.7	52	13.06	.....	.....	.....	.....	.....	.....
28.....	47	56.4	51	16.87	.....	.....	.....	.....	.....	.....
35.....	46	60.3	50	21.81	.....	.....	.....	.....	.....	.....
200.....	41	93.1	.....	.....	.....	.....	.....	.....	.....	.....

Table 13. Equilibrium ball charges (*After Bond*)

Ball size, in.....	5	4 1/2	4	3 1/2	3	2 1/2	2	1 1/2	1	3/4
Stadler No. of ball.....	61.95	61.65	61.30	60.95	60.50	59.95	59.30	58.45	57.30	56.47
Stadler No. of screen above...	62.45	62.15	61.80	61.45	61.00	60.45	59.80	58.95	57.80	56.97

Equilibrium ball charge from renewal feeding of ball size above

Stadler No.	Cumulative per cent. retained									
63	0.0	0.0	.....	.....	.....	.....	.....	.....	.....	.....
62	31.7	13.4	0.0	0.0	.....	.....	.....	.....	.....	.....
61	69.3	61.0	48.3	31.7	0.0	0.0	.....	.....	.....	.....
60	86.3	82.6	76.9	69.5	56.3	31.8	0.0	.....	.....	.....
59	93.9	92.3	89.8	86.5	80.7	69.9	48.9	0.0	.....	.....
58	97.4	96.7	95.6	94.2	91.7	87.1	78.1	55.4	0.0	.....
57	99.0	98.7	98.3	94.7	96.7	94.9	91.3	82.4	51.0	0.0
56	99.7	99.6	99.5	99.3	99.0	98.4	97.3	94.5	84.8	64.1
55	100.0	100.0	100.0	100.0	100.0	100.0	100.0	100.0	100.0	100.0

Equilibrium load *vs.* a seasoned load. Fig. 24 presents a comparison between a sizing test on a seasoned charge of forged-steel balls after 13 mo. operation in a 6 1/2×14 1/2-ft. mill at HOLLINGER (*HS*) with 3-in. renewals, and an equilibrium load with 3-in. renewals calculated by the Bond method. The agreement is so close as to constitute strong evidence of the general validity of the method, although on the basis of the one comparison available, somewhat more rapid wear of the largest balls and a compensating slower wear of the smaller sizes is indicated in practice.

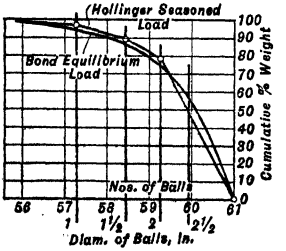

FIG. 24. Comparison of equilibrium and seasoned ball loads.

Barker and Lewis (*163 A 333*) carried out an extensive program on ball rationing in a 2,500-ton 4-mill test section at NEW CORNELIA, with the balance of the mill, comprising 7 similar sections, for reference. Their conclusion was that definite increases in capacity and efficiency (tons to desired *mog* per hp-hr.) are obtainable by rationing make-up balls to produce and maintain a seasoned charge suited to the composite mill feed. If make-up is

at maximum ball size only, the seasoned charge shows a percentage-weight distribution that decreases gradually from coarsest to finest. Thus with 3-in. additions the seasoned charge analyzed: 2 1/2-in., 54.8%; 2 1/2~2, 25.5%; 2~1 1/2, 9.6%; 1 1/2~1, 7.7%; <1-in., 2.4%. Such a charge produces crowding in the finer sand sizes on a once-through operation, and the crowding is aggravated by closing the circuit. By adding smaller make-up balls with the large, the distribution in the equilibrium load is changed markedly, the character and magnitude of the changes depending upon the ration. Thus the seasoned load for a make-up ration of 70% @ 2-in. and 30% @ 3-in. balls was: 20.1% >2 1/2-in.; 10.3%, 2 1/2~2; 42.7%, 2~1 1/2; 18.7%, 1 1/2~1; 8.2% <1-in. This ration decreased but did not wholly eliminate crowding in the fine-sand sizes in mill discharge. The evidence was that addition of some yet smaller balls to the make-up ration would have produced a yet more uniform mill discharge, with concomitant further increases in mill capacity and efficiency, but the estimated resultant higher ball consumption, due to increased percentage rejections by the mill, led to the conclusion (without experimental confirmation) that such increase would not be economical. The broad conclusion was that large balls grind the coarser feed particles; medium-size, the intermediate; and small, the fine. Ball wear, starting from a ration of large balls only, will not produce a seasoned load best fitted to the seasoned composite ore feed to the mill. Proper rationing also increases classifier efficiency.

At CONSOLIDATED MINING & SMELTING CO. (*PC*) extensive tests (18 mo.) were carried on to determine the effects of ball size on capacity, production of <200-m., and efficiency, with respect both to particular grinding mills and to the 3-stage grinding operation considered as a unit. Optimum production of <48-m. (0.138 t.p.hp-hr.) and of <200-m. (0.102 t.p.hp-hr.) occurred in the primary mills (10-ft. × 48-in. Hardinge, at 16.1 r.p.m., 64% of critical, taking 55 t.p.h. of <1/2-in. feed, operating at 64% solids) when replacements comprised a mixture of 3-, 2-, and 1 3/8-in. balls. Elimination of either or both 3-in. and 1 3/8-in. balls from the ration decreased the tons <200-m. per hp-hr. In the secondary mills (10-ft. × 48-in. Hardinge, operating at 80% solids, taking a composite load of 205 t.p.h. of <28-m. classifier sands), change from 2-in. replacements to 1 3/8-in., coupled with nonremoval of 1-in. balls, increased the production of <200-m. per hp-hr. by 44.5%, and permitted increase of 42 t.p.h. new feed to the grinding plant without change in over-all grind or in grinding or classifier equipment. In the retreatment grinding (8-ft. × 48-in. Hardinge mills with Akins and bowl classifiers, taking <100-m. feed), change in ball size from 1 3/8-in. replacements to 3/4-in., and in slope and speed of the classifiers were made simultaneously. The result was an increase of 31% in production of <200-m. per hp-hr., which was attributed to the combined effects of ball size and classifier slopes (change in classifier speed thought to have been without effect). Performance of the 13 mills installed (see Sec. 2, Fig. 116) in March 1942, milling 8,200 t.p.d., follows:

Stage	Hp. consumed	Tons 200-m. produced		Ball consumption, lb. per ton				
		Per day	Per hp-hr.	3/4-in.	1 3/8-in.	2-in.	3-in.	Total
Primary *a*	1,440	2,775	0.080	.....	.....	0.383	0.094	0.477
Secondary *b*	1,335	2,840	0.089	.....	0.706	.....	.....	0.706
Tertiary *c*	235	390	0.069	0.066	0.054	.....	.....	0.120
Re-treatment *d*	125	102	0.034	0.011	0.024	.....	.....	0.035
Totals	3,135	6,107	0.081	0.077	0.784	0.383	0.094	1.338

a 6 @ 10×4-ft. Hardinge.
b 4 @ 10×4-ft. and 4 @ 8×4-ft. Hardinge.
c 2 @ 8×4-ft. Hardinge.
d 1 @ 8×4-ft. Hardinge.

Consumption of cast-iron liner was 0.11 lb. per ton of mill feed. Screen analyses for the period were:

	Cumulative percentages											
Mesh..	4	6	10	20	28	35	48	65	100	150	200	<200
Feed...	13.3	27.4	49.6	66.2	69.4	74.0	76.5	78.9	82.7	84.8	87.3	12.7
Product	....	....	....	....	....	....	....	0.6	3.2	7.0	13.1	86.9

New rod load is usually patterned on an old load that has worked down to a distribution which gives optimum grinding. Table 14 gives size analysis of the load removed from a FLAT RIVER mill.

A distribution in a mill taking <3/4-in. feed in open circuit was: 4-in., 12.7% of the number of rods and 34.7% of the weight of charge; 3-in., 24.8 and 36.9% respectively; 2-in., 28.1 and 18.3; 1 1/2-in., 20.4 and 7.6; 1-in., 14.0 and 2.4.

Since the distribution varies somewhat with different ores, reduction ratios, and feed rates, a rough rule for new loads for secondary-crushing service is 1/8 of total number at 4-in., 1/4 at 3-in., and 5/8 at 2-in. and 1 1/2-in. about equally distributed. For finer feeds in primary grinding service a new load of about equal weights of 2-in. and 1 1/2-in. rods gives a fair balance between good grinding in the shake-down period and rod life.

Volume of charge for maximum capacity in any mill is that which will draw the most power (Art. 15). In general this amounts to a struck volume of about 50% of mill volume, *i.e.*, a load to the axis with the mill at rest. Normal operating loads range from this down to 40%.

At MAGMA (*IC 6757*) load is changed according to capacity requirements. At CANANEA (*ibid.*) increase in charge from 9 to 15 tons, corresponding to 31 and 52% of mill volume, respectively, caused 67% increase in production of <48-m. with only 27% increase in power draft. At LAKE SHORE (*LSS*) maximum capacity of a 6×16-ft. grate mill was with a 50% load; at 43% load the capacity was down 19% and at 60% load it was off 15%. In a high-discharge mill increase in load from 45 to 50% by use of an annulus in the discharge trunnion increased capacity 4.4% with a 4% increase in hp. (*44 CIMM 380*). At HOLLINGER (Table 2) tests 3 to 5 at the best speed (Art. 2) show better than 10% advantage in capacity for 50% load as against either a larger or smaller load, with efficiency favoring the smaller load slightly.

Table 14. Analysis of rod charge from a Flat River mill
(*IC 6658*)

Diam., in.	Charge removed after 4 yr.			Charge returned to mill		
	No. of rods	Weight		No. of rods	Weight	
		Lb.	%		Lb.	%
2 1/2				80	15,912	28.1
2	47	5,983	11.8	38	4,837	8.5
1 7/8	88	9,847	19.5	92	10,295	18.1
1 3/4	135	13,163	26.0	117	11,408	20.1
1 5/8	93	7,812	15.4	75	6,300	11.1
1 1/2	67	4,797	9.5	54	3,866	6.8
1 3/8	84	5,057	10.0	69	4,154	7.3
1 1/4	41	2,038	4.0	.....	.....	.....
1	*a*	1,910	3.8	.....	.....	.....
Total	555	50,607	100.0	525	56,772	100.0

a Broken; 2 to 7 ft. long.

Charge volume and speed are interdependent in that with low volume and high speed power draft is the same and capacity corresponds. Larger media are required with smaller loads to maintain tonnage. A small charge with high discharge reduces capacity markedly; it is restored to some extent by lowering discharge, or diluting the pulp. ROD CHARGE normally is 40 ± 5% and averages lower than ball charges.

Weight of charge per cu. ft. of struck volume is, of course, dependent on the shape of the media and the type of packing. Gow (*134 J 203*) determined by experiments with lead shot that the percentage of voids in shake-down random packing was 38, comprising a rough average between 30% in tetrahedral packing and 48% in cubic. The voids in shake-down packing are substantially the same irrespective of whether the balls are of the same size, of nearly the same sizes, or of a size distribution corresponding to a seasoned load, but they decrease if part of the load is of subinterstitial size. The weight of steel balls corresponding to 38% voids is 300 lb. per cu. ft.

No similar determination has been made of the weight of rods. If, however, the assumption is made they likewise assume a shake-down packing that is the substantial mean of hexagonal and rectangular, and that the normal range in diameter of a seasoned load does not change the voids substantially, the weight per cu. ft. of struck volume is between 400 and 425 lb.

Coghill and deVaney (*CEG*) state that 72 lb. of <6-m. pulp filled the interstices of an 800-lb. ball load at rest and that 39 lb. of the same material filled a 1,020-lb. rod load. On the basis of these figures the weight of the rods is 390 lb. per cu. ft. of struck volume.

Material of tumbling bodies is important from the standpoint of specific gravity, hardness, toughness, and delivered price.

Specific gravity. Mill capacity increases materially, although not quite directly, with increase in superincumbent load; also, so far as the coarser part of the feed is concerned, with increase in momentum of the falling bodies. Both of these quantities increase directly with specific gravity of the medium, all other things being constant. It follows that the capacity of a given mill will be greatly increased with a change from a pebble to a ball charge. There is, of course, marked increase in power draft also, if the same struck volumes of media are employed, and a smaller increase for the same weight of media. Consequently efficiency may not change materially. Data covering comparative performances of mills with ball and pebble loadings are given in Tables 15 to 19. Similar performances have been reported for changes from pebbles to balls in RAND tube mills. At UTAH substitution of balls for pebbles in 7×10-ft. mills increased capacity to flotation size threefold. Pebbles should be larger than balls for comparative reductions of coarse feeds.

At COPPER RANGE an 8-ft. × 30-in. mill carrying 10,000 lb. of pebbles ground 65 tons per 24 hr. Change to 9,000 lb. of balls raised the capacity to 150 tons without substantial change in screen test of product. At MIAMI COPPER CO. change in load of an 8-ft. × 22-in. conical mill from 8,000 lb. of pebbles to 15,000 lb. of balls, open-circuit grinding, increased capacity from 178 to 300 tons per 24 hr. and produced a slightly finer product at a slightly lower rate per hp-hr. Pebble consumption was 1.14 lb. per ton and consumption of 2-in. manganoid balls 1.21 lb. per ton (see Table 16). Closing the circuit on the ball mill with a rake classifier gave a yet finer product at substantially the same power consumption. Comparative costs are given in Table 17. Power for ball milling cost 8.2% more than for pebble-mill grinding; grinding medium, 251% more and lining 152% more; labor cost was

Table 15. Comparative performances of balls and pebbles in conical mills in open circuit at Timber Butte

	Ball mill		Pebble mill	
Size, diam. ft × length cyl., in.	6 × 56 *a*		8 × 30	
Speed, r.p.m.	24 1/2		24 1/2	
Tons of new feed per 24 hr.	228		119	
Horsepower consumed	105		55	
Tons per hp-hr.	0.090		0.090	
Solids, per cent	46		35	
Grinding charge, material	Manganoid		Basalt	
Weight and size	21,000 *b*		10,000	
Consumption, lb. per ton	2.75		2.89	
Liner, material	Cast iron		Hard iron	
Life	*c*		4 1/2 mo.	
Mesh	Weight, per cent.			
	Feed	Product	Feed	Product
10	5.2	.....	1.2	.....
14	14.8	0.8	3.2	.....
20	16.2	1.0	4.4	0.6
28	16.2	1.8	7.2	0.6
35	13.6	2.4	10.0	1.2
48	9.8	4.2	13.8	2.8
65	5.8	5.6	15.6	6.0
100	3.8	8.0	13.0	10.8
150	2.0	9.0	13.2	16.8
200	0.6	8.6	4.6	9.4
<200	12.0	58.6	13.6	51.8

a 8-ft. × 30-in. pebble mill lagged down.
b 43% @ 1 1/2-in., 31% @ 1 1/4-in., 26% @ 1-in.
c Cylindrical portion, 3 1/2 mo.; conical portion, 7 1/2 mo.

Table 16. Comparison of 8-ft. × 22-in. conical ball and pebble mills at Miami Copper Co.

	Pebble mill		Ball mill		Ball mill	
Circuit	Open		Open		Closed	
Tons of original feed per 24 hr.	178		300		298	
Solids, per cent	51		53		66	
Speed, r.p.m.	27.5		22.0		22.0	
Charge, lb.	8,000		15,000		15,000	
Power consumed, hp.	46.8		87		85.7	
Tons ground per hp-hr.	0.159		0.144		0.145	
Tons produced per hp-hr.:						
<20-m.	0.112		0.107		0.116	
<48-m.	0.081		0.086		0.101	
<100-m.	0.055		0.061		0.072	
Mesh	Weight, per cent.					
	F	P	F	P	F	P
3	1.7	.....	1.7	.....	2.3	.....
4	4.3	.....	6.4	.....	4.8	.....
6	15.8	.....	18.9	.....	15.4	.....
8	18.4	.....	19.0	.....	18.7	.....
10	15.6	0.5	14.8	0.4	18.3	.....
14	12.0	1.7	10.5	1.4	12.0	.....
20	9.3	4.3	8.2	3.0	8.7	0.1
28	6.6	9.5	5.8	6.6	5.6	0.8
35	2.6	9.7	2.3	7.6	2.1	5.1
48	1.9	11.5	1.7	10.4	1.7	13.9
65	1.1	8.3	1.0	8.1	1.0	10.7
100	1.3	10.1	1.1	11.2	1.0	11.8
150	1.1	8.0	1.0	9.4	0.9	10.6
200	0.7	4.1	0.6	5.2	0.5	5.1
<200	7.6	32.3	7.0	36.7	7.0	41.9

Table 17. Comparative costs of 8-ft. × 22-in. ball- and pebble-mill operation, Miami Copper Co., Oct. 1915 to Mar. 1916 *a*

	Ball mill	Pebble mill
Total tonnage ground	371,754	167,532
Tons per mill per 24 hr.	283.6	174.5
Delays, per cent. total time	3.0	1.4
Tons of crude ore per man-shift operating	1,061	933
Tons of crude ore per man-shift, repairs	619	736
Tons of crude ore per man-shift	391	396
Horsepower per mill	81.9	46.7
Horsepower-hour per ton ground	0.144	0.156
Ball or pebble consumption, lb. per ton ground	1.510	1.428 *b*
Cast-iron lining consumption, lb. per ton ground	0.454	0.015
Total cost per ton ground	$0.1591	$0.1036

a 8-ft. ×22-in. conical mills. Ball mills underloaded on account of insufficient motor equipment.
b Includes pebbles used in lining.

Table 18. Comparison of 8-ft. × 66-in. conical ball and pebble mills at Miami Copper Co.

	Pebble mill		Ball mill		Ball mill	
Circuit	Open		Open		Closed	
Tons of feed per 24 hr.	294		324		333	
Solids, per cent.	59		61		72	
Speed, r.p.m.	28		20.5		20.5	
Charge, lb.	15,000		29,000		29,000	
Power consumed, horsepower	73.7		160		162	
Tons ground per hp-hr.	0.166		0.084		0.086	
Tons produced per hp-hr.:						
<48-m.	0.065		0.061		0.063	
<100-m.	0.046		0.058		0.061	
Mesh	Weight, per cent.					
	F	P	F	P	F	P
10	1.0	.....	1.5	.....	1.9	.....
14	2.3	0.1	3.5	.....	5.1	.....
20	6.0	0.7	7.9	0.2	8.9	.....
28	18.3	4.5	23.6	1.1	19.6	.....
35	24.7	11.6	23.9	2.4	20.2	.....
48	23.6	20.0	21.5	6.0	18.8	0.5
65	11.6	15.0	9.8	6.9	7.8	1.9
100	8.4	16.1	5.7	11.5	8.9	17.3
150	2.8	9.1	1.5	11.9	2.7	16.7
200	0.4	4.1	0.2	7.9	1.4	8.2
<200	0.9	18.9	0.9	52.1	4.7	55.4

Table 19. Comparative costs of 8-ft. × 66-in. ball- and pebble-mill operation at Miami Copper Co., Oct. 1915 to Mar. 1916

	Ball mill	Pebble mill
Total tonnage crude ore	147,709	639,770
Tons of actual feed per mill per 24 hr.	330	250
Delays, per cent. possible time	2.0	2.8
Tons of crude ore per man-shift, operating	1,644	1,424
Tons of crude ore per man-shift, repairs	4,804	4,162
Tons of crude ore per man-shift	1,225	1,061
Horsepower per mill	164.5	73.3
Horsepower per ton ground	0.084	0.142
Ball or pebble consumption, lb. per ton ground	2.526	1.229
Cast-iron lining consumption, lb. per ton ground	0.320	0.240
Total cost per ton ground	$0.2308	$0.1037

about the same for both. At the same plant, changing the grinding load in an 8-ft. × 66-in. conical mill from pebbles to balls increased average capacity from 250 to 330 tons per 24 hr. but doubled the per-ton power consumption and more than doubled the cost per ton for regrinding (see Tables 18 and 19). On the other hand, the product reground in the ball mill contained 97.6% <65-m. material while that from the pebble mill contained only 48.2% and was unsuitable for flotation feed. Further, the capacity of a mill section with a ball regrinding mill was 822 tons per 24 hr. as against 714 tons with a pebble mill. Increased recovery and tonnage on the ball-mill section more than compensated for increased regrinding costs. CALUMET & HECLA continued to use pebble mills in regrinding until war shut off the supply in 1939. Their stand is clearly justified by Benedict's statement (*117 J 282*) that on the hard conglomerate ore pebble wear is 4 to 5 lb. per ton and ball wear almost as great; pebbles cost $0.0075 per lb. and balls $0.035 per lb.; and the difference in cost on this score alone is $0.10 per ton in favor of pebbles. At WRIGHT-HARGREAVES (*115 J 884*) there was an actual saving in power attendant upon a change from pebbles to balls. Two 5×16-ft. cylindrical pebble mills with El Oro liners ground ball-mill product to 60% <200-m. at the rate of 125 to 150 tons per 24 hr. and consumed 70 to 75 hp. (=0.045 to 0.050 tons <200-m. per hp-hr.) Change to ball loads (20,000 lb. each mill) increased the daily capacity to 200 to 260 tons containing 80 to 85% <200-m. and power consumption at 28 r.p.m. was 90 to 100 hp. (=0.078 to 0.087 ton <200-m. per hp-hr.).

Composition of balls and rods. The usual materials for balls are chilled cast iron and forged steel, for rods high-carbon steel, all more or less alloyed. Data are insufficient to support any general statements as to best composition for either. Summaries of a few actual analyses are given in Table 20. Usual procedure in ball purchases is to test a

Table 20. Analyses of balls and rods *e*

Nominal material	Rods			Balls				
	High-carbon steel			FS	CI *b*	CI *b*	CI	Manganoid *b*
Composition	Percentages							
C	0.6 –1	0.85–1.00	0.75	0.7 –1	0.84	1.17	2.8	1.21
Si	0.15–0.25	0.15–0.25	0.25–0.30	0.08–0.5	0.42	0.40	1.2	0.80
Mn	0.5 –0.8	0.90–1.20	0.40–0.60	0.6 –0.8	0.56	0.89	0.3	10.97
Cr	0.2 –0.5	.....	.....	0.34	0.06	0.03	.....	0.06
S	0.03–0.05	0.04 max.	.....	0.03–0.06	0.031	0.034	0.185	0.031
P	0.02–0.04	0.04 max.	0.08–0.10	0.02–0.04	0.031	0.067	0.39	0.098
Mo	.....	.....	0.20	.....	.....	.....	.....	.....
	a	*c*	*d*					
Hardness:								
Brinell	.....	280–310	.....	.....	3.5 mm.	3.3 mm.	.....	4.1 mm.
Sceleroscope	.....	.....	.....	.....	45	55	.....	27

a Range for 6 mills (*IC 6757*).
b Wraight (*30 IMM 208*).
c A leading manufacturer of grinding equipment has found the following specification generally satisfactory.
d This rod has given good service under some conditions.
e See also Table 21*A*.

locally cast product against forged alloy ball and base future use on the economic results. Practice is about equally divided for secondary mills, but forged steel predominates in primaries, especially when the balls exceed 3-in. diameter, when mill diameter exceeds 6 ft., and when mills are run at cataracting speeds.

Lawler (*112 J 5*) warns that most locally made balls from assorted scrap of unknown composition have a carbon content ranging from 0.2 to 1% when the proper limits are 0.6 to 1%, that the chrome in chrome-steel balls ranges from nil to 0.05%, and that balls from most small forges will vary greatly from shipment to shipment.

RODS should be hot-rolled and machine-straightened. Mild-steel rods are unsuitable for the reason that they bend and kink after wearing down to a certain minimum diameter and snarl up the whole rod load. The hardened-steel rods break up when they wear down and are removed at about 1-in. or left in and eventually discharged in small pieces. Experience at TENNESSEE indicated emphatically that removal of 1-in. and smaller rods definitely increased efficiency. Consultation with an independent metallurgist is recommended both as to the most promising alloy ball available and as to composition, control, and heat-treatment of cast balls.

An inkling of the service to be expected from such a consultant may be gained from the following excerpt from *26 #8 MCJ 35*. At a mine with a hard ore (7.25 Mohs) and with high transportation

charges, high-carbon copper-molybdenum forged-steel balls were tried. The molybdenum content permitted a higher carbon content (hence increased hardness) without brittleness, and caused deeper penetration of surface hardening (1 1/2 in. in a 4-in. ball as against 7/32 in. for the usual forged ball). The copper contributed corrosion resistance. Brinell readings were: 720 at surface (*vs.* 640 for usual ball); 450 at center (*vs.* 360 usual); hence average volumetric hardness for a 4-in. ball was 660 (*vs.* 390). A 4-in. Cu-Mo ball was 98% "fully hard" *vs.* 29% for ordinary heat-treated forged steel. Grain size was watched carefully during manufacture and the balls were heat-treated only after pilot batches had been put through.

Hardness of tumbling body increases capacity and efficiency and decreases wear. The effects are much more pronounced with hard ore than with soft.

Coghill and deVaney (*CEG*) report an increase of 30% in efficiency on changing from rods made of old boiler tube (annealed by use) stuffed to a specific gravity of 7.3 to steel rods (sp. gr. 7.7), although the change in efficiency with the boiler tubes on change of specific gravity of stuffing had been relatively small. They also tested Nihard balls (2.5–6% Ni, 0.5–1.5 Cr, 548 Brinell) as against annealed cast-iron balls (150 Brinell). The Nihard ground 21% more chert per unit of power than the soft iron; the difference was not so marked with dolomite. Usual hardness range for cast-iron balls is 400 to 500 Brinell; forged balls are normally softer as forged but may be tempered as high as 600 to 625 Brinell for the smaller sizes and 500 to 550 for the larger. Hardness of Lorain forged-steel balls (Carnegie-Illinois Steel Corp. *PC*) is 600 to 675 Brinell for balls up to 3/4-in. diam., and 550 to 650 for the larger balls. Rose (*134 A 361*) points out that forged-steel balls of 475 to 525 Brinell, which are rust-resistant, gave the best wear (@ 1 lb. per ton) at Copper Range and Homestake. At Lake Shore (*LSS*) an unknown considerable drop in hardnes of balls resulted, over a period of 6 mo., in a material falling-off in grinding performance, due, probably, both to the decrease in grinding effect of the softer balls and to a gradual decrease in volume of tumbling charge, the daily quota of balls having been based on wear of harder balls. Coghill and deVaney report sceleroscope hardnesses of pebbles as follows: Flint, 94; jasperoid, 102; artificial sillimanite, 82.

Toughness of tumbling body determines the amount of breaking thereof, with consequent early rejection and loss of use. Toughness has always been an important factor in choice of pebbles, but alloying and heat-treating of balls for toughness is a comparatively recent practice.

At Loreto (*112 A 728*) the consumption of 5-in. forged-steel balls in 8×6- and 6×12-ft. primary mills decreased from an average of 1.8 to an average of 1.45 lb. per ton owing to heat-treatment; in 6×10- and 5×10-ft. secondary mills the corresponding figures were 2.75 and 1.61.

Heat-treated forged chrome-steel balls of relatively high carbon content (0.6–1%) and containing 0.5–1% Mn are tough and reasonably hard. Toughness is of primary importance when there is considerable impact grinding, *i.e.*, with large balls, high speeds or rough liners, or mills of large diameter.

In a 5×10-ft. open-end primary ball mill at Mammoth (*153 A 396*) running at 80% of critical, reducing from 1/2-in. to 8-m., 4-in. cast-iron balls were substituted for 4-in. forged-steel for a few months but breakage of large balls reduced capacity to a point where over-all costs were higher.

Pebbles have a specific and particular advantage over metal grinding media when contamination by iron must be prevented, as in grinding some industrial minerals, *e.g.*, talc, lithopone, chalk, feldspar, and quartz. They also had for many years a geographical freight differential in South Africa, where balls had to be imported, and hard rock that made a usable pebblelike grinding medium was a part of the ore mined. Otherwise, where competition between pebbles and balls has been direct, balls have almost invariably been chosen, either because of a direct advantage in operating cost (p. 35), or because, although operating costs were close, the higher tonnages possible with balls made profits greater therewith. In a few special instances, of which Calumet & Hecla is best known, the ore (conglomerate) is so hard that ball wear was 3 1/2 to 4 lb. per ton at 3 1/2¢ per lb. (1930) *vs.* 5 lb. Danish pebbles at 3/4¢ per lb. This cost differential, particularly when taken with the fact that the grinding installation was more than adequate for the declining ore supply, made pebbles the inescapable choice. Capacity of an 8-ft.×72-in. conical pebble mill from 3/16-in.~20-m. feed to 35 *mog* was 110 tons per 24 hr. at a cost (1929; *IC 6357*) of 12.6¢ per ton, of which more than half was for power (19.6 hp-hr. per ton).

Table 21. Trade numbers and sizes of pebbles

Number	Size, in.	
	Min.	Max.
0	1	1 1/2
1	1 to 1 1/4	1 3/4 to 2
2	1 3/4	2 3/8 to 2 1/2
3	2 3/8	3 1/4
4	3 1/8 to 3 3/8	3 3/4 to 4 1/2
5	3 1/2 to 4 1/4	4 to 5 1/2
6	3 3/4 to 5	6 to 6 3/4
7	4 3/4 to 5 1/2	7 to 7 7/8

Supply. Desirable pebble is tough, hard, heavy, as nearly spherical as possible, resistant to chemical reaction with the material being ground, of such composition that its dust is not harmful in the ground product, and cheap. The best pebbles came from the Danish coast; an inferior quality from France; both flint. Newfoundland pebble, less satisfactory than either, is graywacke. A domestic pebble comprising a mixture of tuff, porphyry, and granite from San Diego Co., Calif., has had considerable local use for grinding cement clinker (*IC 7139*). The same bulletin lists possible domestic sources and dealers. Local hard rock has rarely proved practically useful; wear is almost invariably excessive on account

Table 21A. Tests for ball wear (*After Prentice*)

Description	Heat treatment	Analysis						Hardness Rockwell C. from center			Diameter, in.		Running time, days	Days to reduce diam. from 3- to 1-in.
		C	Mn	Cr	Si	S	P	1/2 in.	3/4 in.	1 1/4 in.	At start	At finish		
3-in. BALLS														
Forged steel	*a*	0.90	0.89	0.85	0.20	0.03	0.04	39	39	40	2.99	1.02	144.6	146.8
Rolled steel	Q	0.65	0.59	2.1	0.90	0.03	0.04	44	.....	.....	2.97	0.99	133.4	134.7
Rolled steel	Q	0.60	2.6	.....	N.D.	N.D.	N.D.	21	23	24	3.01	1.24	111.2	125.7
Rolled steel	Q	0.65	3.0	.....	N.D.	N.D.	N.D.	.....	.....	57	3.05	1.09	122.3	124.8
Hammered steel	U	0.60	2.6	.....	N.D.	N.D.	N.D.	49	.....	.....	3.06	1.09	122.3	124.2
Rolled steel	U	0.78	0.87	1.10	N.D.	0.053	0.067	35	.....	.....	2.94	1.45	89.0	119.5
Rolled steel	U	0.65	0.59	2.1	0.90	0.03	0.04	31	32	34	3.00	0.95	122.3	119.3
12% Mn steel	U	1.16	11.8	.....	0.33	0.006	0.063	11	.....	.....	3.00	1.06	111.2	114.6
Rolled steel	U	0.53	1.53	0.28	0.11	0.034	0.046	27	.....	.....	3.00	1.04	111.2	113.4
Rolled steel	Q	0.53	1.53	0.28	0.11	0.034	0.046	24	.....	.....	3.02	1.04	111.2	112.3
Rolled steel	Q	0.38	0.85	0.75	0.23	0.051	0.054	.....	.....	51	2.97	1.16	100.1	110.6
Rolled steel	Q	0.58	0.32	.....	0.12	0.057	0.050	21	.....	.....	3.01	0.98	111.2	109.5
Rolled steel	Q	0.59	0.71	.....	0.70	0.035	0.039	30	.....	.....	3.04	0.99	111.2	108.5
Rolled steel	Q	0.53	0.32	.....	0.12	0.056	0.044	24	.....	.....	3.06	1.03	100.1	98.6
Hammered rail	U	0.64	0.72	.....	0.18	0.021	0.031	17	.....	.....	3.04	1.45	77.8	97.9
Cast alloy	Q	2.50	0.27	3.3	0.83	0.06	0.38	38	40	40	2.99	1.17	89.0	97.7
Rolled steel	Q	0.53	0.30	.....	0.24	0.047	0.053	33	.....	.....	2.97	1.18	77.8	86.9
Rolled steel	U	0.53	0.32	.....	0.12	0.055	0.044	5	.....	.....	3.01	1.16	77.8	84.1
Cast semi-steel	U	3.14	0.50	Tr.	0.30	0.156	0.131	44	.....	.....	2.93	1.06	77.8	83.3
Meehanite (cast)	U	N.D.	N.D.	N.D.	N.D.	N.D.	N.D.	46	.....	.....	2.96	1.31	66.7	80.8
2 1/2-in. BALLS														From 2 1/2 in. to 1-in.
Hammered steel	U	0.76	0.47	.....	0.27	0.069	0.071	.....	.....	.....	2.51	0.93	77.8	73.9
Cast semi-steel	U	3.14	0.50	Tr.	0.30	0.156	0.131	.....	.....	.....	2.54	0.87	66.7	60.0

a Not known, but apparently unquenched.
N.D. Not determined.
Q Quenched from about 1,000° C. in warm water.
U Unquenched.

of high breakage, and efficiency is low owing to softness as compared with good natural pebble and to the tendency to form flat shapes which decrease rubbing. The outstanding exception was the RAND. At the WEST END mill (*110 P 139*) artificially rounded (tumbled) locally mined flint was consumed in a mill with smooth-iron lining in the proportion of 1.05 to 1 of Danish pebbles in a mill with Komata lining, while the cost per ton ground was only 4/7 of the cost of imported pebbles. Local pebbles wore flat and occasionally stuck in the grate. At HEDLEY GOLD MINING CO. (*114 J 1057*) Danish pebbles at $33 per ton delivered cost, on the average, $2,600 per month; substitution of local pebbles at $4 per ton cut the cost to $600 per month.

Pebble is sold by numbers designating size; the size range corresponding to different numbers varies somewhat according to the dealer; usual range is given in Table 21. Pebbles for a given service should usually be larger than balls because of lower specific gravity, which reduces striking power and increases the size of rejects; use of large pebble also reduces the percentage of reject.

Testing tube-mill pebbles. A large part of pebble consumption is due to chipping, which occurs principally at the feed end of the mill. Allen (*105 J 1033; 124 P 405*) contends that toughness is the important property of suitable pebble material and that a tough soft rock may be superior to a hard but brittle flint. He suggests testing pebbles for hardness, toughness, and abrasion by the methods practiced for testing road material (Sec. 3, Art. 41). Pebbles tend to wear flat with smooth liners but to maintain more nearly original rounded shapes with ribbed liners.

Use of pebbles in ore milling today is largely confined to the Rand. For more details on such materials see *Ed. 1, pp. 430 to 433*. King and Clemes (*46 IMM 600*) state that primary ball milling on Rand costs about 2¢ per ton more than when using reef pebble, but that tonnage ground is markedly higher.

Wear of balls depends upon the material of the ball and the method of manufacture; the material being ground; mill diameter, speed, and height of discharge; feed rate, pulp density, liner surface, and ball diameter.

Material of the ball and the method of manufacture determine hardness, toughness and corrosion resistance. CORROSION both by acids introduced with the pulp and by oxygen is an important element in steel consumption. Acidic corrosion is minimized when lime is added to ball-mill feeds; alloying for hardness and toughness ordinarily increases rust resistance also. It should be borne in mind that rusting may be proceeding actively in a mill despite that balls and liner in the operating mill are visually clean and bright. The reduction in oxygen content in high-sulphide pulps protects the steel in such circuits.

Results of tests by Prentice (*43 JCM 99*) in a 2 1/2×1 1/2-ft. cylindrical mill, run at cascading speeds with smooth liners, grinding Rand ore (44% >48-m.), are given in Table 21*A*. The data on heat treatment are so scanty, however, and the indicated treatment was so inadequate, both in itself and in its blanket application, as to narrow the value of the data materially from the standpoint of correlation of analysis with consumption.

Material being ground affects wear from the standpoints of size, abrasiveness, and chemical composition. All other things being equal, the intermediate sand sizes (14- to 35-m.) appear to cause maximum consumption, both by abrading more, and because they key the load higher on the rising breast of the mill. Coarse feed decreases ball-to-ball contact; very fine feeds usually result in sufficient very fine material in the mill to cushion and lubricate the load to an appreciable extent. As a consequence, unless there is excessive breakage, consumption in primary mills is less than in secondary. Ball size (less surface per ton) may play some part in this, and ball material (forged-steel primary, cast secondary) is the cause in many cases. Difference in crushing resistance and abrasiveness between primary and secondary feeds is a common cause of difference in steel consumption. In primary grinding the major part of the work consists in breaking grain from grain and in breaking the softer grains. Much of the softer material is removed finished ahead of the secondary circuit, leaving to the latter the tough and generally hard and abrasive material to finish. Pulp constituents that introduce iron-reactive compounds are discussed in the preceding paragraph.

Mill diameter and speed determine the impact loads and the pressures between media (Art. 3). Wear increases, of course, with increase in these quantities. At LAKE SHORE (*LSS*) extensive tests indicated that wear is proportional to $D^{2.6}$ (D = mill diameter), all other conditions being constant.

Table 22. Height of discharge *vs.* ball wear at a Rand mill (*After King and Clemes, 46 IMM 601*)

Mill, diam. × length, ft.	Diam. of discharge, in.	Ball consumption, lb. per ton of new feed	Tons <200-m. produced per hp-hr.
6 1/2×9	41	2.5	0.035
6 1/2×9	52	2.7	0.035
9×10	60	2.2	0.040

Height of discharge determines, with feed rate, the amount of interstitial pulp; pulp density and size of grain determine its consistency. The more interstitial material and the greater its plastic resistance, the less the wear per pass, but consequent increase in circulating load with concomitant increase in number of passes to effect a given amount of finished grinding may eat up much or all of the saving due to these causes. Table 22 shows ball consumption in the 3 mills reported to be directly proportional to the lowness of the discharge.

Liner which produces the most activity of the load will, in general, produce the most wear. The effect of liner surface is fully presented in the following data from LAKE SHORE (*LSS*).

Careful and long-continued tests (3 to 25 mo.) with ball addition into each mill weighed, made, recorded and reported to the test staff daily by one man, demonstrated that (ball) wear is a function of liner surface and hardness, mill speed, and height of discharge. Thus wear of 3/4-in. cast balls (Brinell 477 to 514) with Cobalt pocket liners and pockets empty was 92% of that with full pockets; with Cobalt and clover-leaf pocket liners of the same hardness (495 Brinell), with full pockets the 3/4-in balls wore equally; the wear of 1 1/4-in. forged-steel balls (Brinell 575 to 625) was comparatively 98 with Nihard ripple liners (Brinell 683), 90 with Nihard smooth (Brinell 500 to 600), 78 with the same liner after it had worn to circumferential grooving, as against 100 with Cobalt pocket liner with full pockets. Similarly, wear of the 3/4-in. balls with smooth cast-iron liners (Brinell 418 to 460) was 96, and with grooved (Black grooving) liners of the same material 80, relative to the wear with Cobalt pocket liners (Brinell 495) with full pockets. Wear of the 1 1/4-in balls against a ripple liner of 290 Brinell was 92% of that against a ripple liner of 683 Brinell, all other things being equal. Wear of the 3/4-in. balls against empty Cobalt pocket liners (Brinell 495) was 97% as great at 27 r.p.m. as at 30 r.p.m., all other conditions being the same. Wear of both the 3/4- and 1 1/4-in. balls with the full Cobalt pockets was 72% as much in a high-discharge mill as in the same mill with low discharge.

Ball diameter affects consumption in two ways. Large balls at cataracting speeds tend to break small balls. On the other hand, in a mixed load large balls wear faster than small.

At SYLVANITE (*41 CIMM 284*), all other things being equal, ball wear with 4-in. forged-steel renewals was 2.76 lb. per ton as against 2.62 lb. with 3 1/2-in. balls; with mixed renewals (3 1/2-in., 70%; 4-in., 30%) total consumption was 2.67 lb., but consumption of 4-in. balls was at the rate of 1.86 lb. as against 1.83 lb. for the 3 1/2-in.

Shape of worn balls. Prentice's tests (*loc. cit.*) confirm the observations at HOLLINGER (*HS*) that balls with initial surface unevenness, such as a casting neck, surface pit, circumferential ridge, or the like, wear unevenly, and in such a way as to increase the initial departure from sphericity and to approach first a double-ended pyramid, then a tetrahedron, and finally a shallow cylinder with dished ends. All of the evidence is that the irregularly shaped tumbling bodies (in a cascading load) settle down into the interstitial spaces between the larger balls, thus excluding and protecting pulp to a considerable extent. This would tend to support the practice followed in some plants of screening out the small balls and fragments periodically, particularly from primary-mill loads.

Wear of forged-steel balls in primary service ranges in general between 1.0 and 1.5 lb. per ton of new feed, with an occasional figure as low as 0.75 lb. or as high as 4.5. The exceptionally high figures correspond to one-stage grinding of coarse feeds to fine *mogs*, *e.g.*, <1 1/2-in. to 100 or 150 *mog*. In secondary service reported consumptions range from 2.0 to 3.5 lb., but the number of reports is small and the higher figures are for exceptionally hard service. Consumption of cast-iron in primary service ranges from 1.0 to 3.0 lb., but such use is usually confined to ores that grind easily; the usual range in secondary service is 1 to 2 lb.

Size of feed and amount of recirculation had no effect on ball wear at LAKE SHORE over the range of feed size from 55% >65-m. to 55% >200-m. and of circulating load from 20% to 300% (*LSS*).

Consumption of rods varies widely. Disregarding exceptionally high and exceptionally low values, the range is from 0.2 lb. per ton for soft ore to about 2 lb. for hard, averaging close to 1 lb. for 20 mills.

At BALMAT (*IC 6574*) consumption was reduced about 0.4 lb. per ton by routing new feed directly to the mill instead of to the classifier.

Pebble consumption. When mine rock is used, the consumption ranges from 15 to 200 lb. per ton of feed. With flint pebbles the average is about 2 lb. per ton and the usual range from 0.5 to 8.0. Hard ore, naturally, causes greater consumption than soft. Coarse feed consumes more than fine.

At WEST END mill (*110 P 139*) feed was battery product through 0.27- and 0.19-in. screens, hard but not tough quartz. Mill product was 80% <200-m. Pebble consumption averaged 7.1 lb. per ton; range was from 4.8 lb. with the finer feed and Danish pebbles to 8.7 lb. with coarse feed and French pebbles. Consumption at three other mills in the district taking finer feed and finishing to the same size was 4.2, 4.4, and 4.7 lb. per ton.

Fine grinding consumes more pebbles than coarse. Consumption in closed-circuit grinding is greater than in open-circuit work, as a general thing, but it is probable that this is due to the fact that the product of closed-circuit work is generally the finer. Ribbed liners cause higher pebble consumption than smooth on account of the greater tumbling that they produce. High moisture content causes high pebble consumption. Consumption per ton of initial feed is lower the greater the circulating load.

Ball wear *vs.* power consumption. DeVaney and Coghill (*138 J 337*) found by laboratory tests that ball wear per unit of power input is independent of mill speeds through the range from 26 to 80% of critical, and of ball sizes, provided the load is constant. They examined a considerable number of operating records and found that the wear when expressed in pounds per hp-hr. was less fluctuating than when expressed in pounds per ton

crushed, but that it was far from constant. For steel balls the average of 54 mills was 0.15 lb. per net hp-hr. with a range from 0.054 lb. to 0.29 lb. Rod wear averaged 0.2 lb. per net hp-hr.

At Government Gold Mining Areas (*37 JCM 108*) grinding pyritic flotation concentrate to 90% <325-m., the consumption of tumbling medium (drill slugs) was 13.5 lb. per ton ground.

Maintenance of charge volume is difficult to insure. Usual procedure is to charge a fixed weight per day based on average ball wear. At some plants additions are based on power readings, but in this practice account must be taken of the effect of liner wear. Daily charging is better than at longer intervals, as it maintains more even operation.

Ball-casting machine as built locally for local casting is described with working drawings by Huttl (*127 J 806*).

7. ROD MILLS

Description. The rod mill has a cylindrical shell (Art. 3), the length of which ranges from 1 1/3 to 3 times the diameter. It is made both in overflow (Fig. 25) and open-end

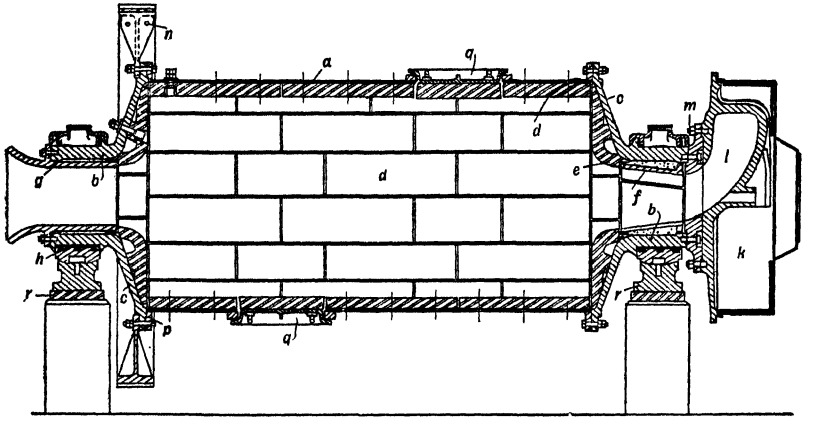

Fig. 25. Trunnion-type rod mill (*after Allis-Chalmers Mfg. Co.*).

(Fig. 26) types. Heads and end liners are usually such as to present a plane inner surface, but slightly coned ends can also be used. Feed trunnion is made as short as possible to accommodate coarse feeds. Rods are a few inches shorter than the inside length; usual range of rod diameters is 1 1/2 to 3 1/2 or 4 in. Load is limited to 40 to 45% of mill volume for overflow mills; it may be anything desired with open-end mills. Shell liners are usually wave type.

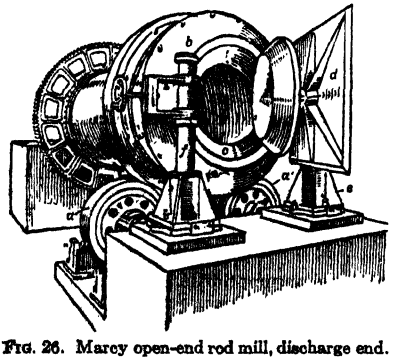

Fig. 26. Marcy open-end rod mill, discharge end.

Overflow-type mill (Fig. 25) is characterized by the fact that the shell *a* is supported, charged and discharged by means of the trunnions *b*. In the form shown, the trunnions are cast integral with the heads, which gives a strong and rigid structure. All parts that come in contact with pulp are lined (*d, e, f, g*). The mill shown, being designed for open-circuit operation, has a drum-type feeder. The discharge-trunnion liner is flared to prevent run-back of pulp to the tail-end bearing. Two manholes *q* are provided, spaced 180° to balance the weight of the covers; they are made large enough to permit entrance of shell-liner blocks *d*. End liners *e* are ordinarily made in one piece; when so made one or both heads must be removed for renewal.

Open-end mill (Fig. 26) has the discharge end carried on rollers *a;* the discharge head *b* has a large, centrally spaced lip-type opening *c;* a heavy door *d* mounted on a post *e*, independent of the shell proper, swings forward and is locked into place during operation by a hand-wheel-operated clamp mounted on post *f*, the closed position being such as to leave an open annulus for discharge of pulp, but to prevent splash and egress of rods.

Table 23. Rod-mill data from manufacturers' catalogues

Size, diam. ×length, ft. *a*	Rod charge, tons *b*	Hp. consumed *c*		Speed, r.p.m. *d*	Rated capacities, tons per hr., from <1-in. feed to *mogs* indicated							
		Total	Per ton of rods		8	14	20	35	48	65	100	200
2×4 *f*	0.75–0.8	4–6	6.3–6.7	33	0.8	.....	0.6	0.5	0.4	0.3	.....	.....
2×6 *g*	1.3	6–9	5.8	33	1.2	.....	1	0.8	0.6	0.5	.....	.....
3×6	2.2–3.2	14.7–20	6–8	29–34	3–4.5	2.7	2.4–3.3	1.9–2.7	1.6–2.1	1.2–1.7	0.7	0.17
3×8	3.5–4.3	19.5–30	6–8	29–34	4–6	3.3	3–4.4	2.5–3.5	2.1–2.9	1.6–2.1	0.9	0.21
3 1/2×7 *g*	4.5	30	6.7	27	6.2	5.4	4.6	3.8	3.1	2.3	1.2	0.29
3 1/2×8 *g*	5.5	37	6.7	27	7.3	6.2	5.2	4.4	3.6	2.7	1.5	0.33
4×8	6–6.8	38–50	5.8–7.7	25–26	10	9.0	7.5–8.8	6.1	5.1	3.8	2.1	0.50
4×10	7.5–8.5	45–60	5.8–7.1	25–26	12.5	10.8	9.2–10.7	7.5	6.2	4.6	2.5	0.62
5×10	12.5–13.3	75–100	5.7–8	20–21	22	19.6	16–18	13.4	11.5	8.2	4.6	1.04
5×12	14.5–16	90.5–120	5.7–8.3	20–21	26	22.5	19–22	16	13.2	9.8	5.4	1.46
6×10 *g*	20	110	5.5	17–18	.....	.....	28	.....	.....	12.2	.....	.....
6×12	19–25	132–150	5.5–7.9	17–18	33–35.5	29	25–33	21	17.2	13	6.9	1.67
6×14 *g*	25	160–175	6.7	17–18	41.5	.....	31	25	21	15.5	.....	.....
6 1/2×12 *g*	26.5	170–190	6.8	16.5	46	.....	35	28	23	17	.....	.....
6 1/2×14 *g*	29.8	200–220	7.0	16.5	53	.....	40	32	27	20	.....	.....
7×12 *g*	33.5	179	5.4	15–15.5	.....	.....	48	.....	.....	21	.....	.....
7×14 *g*	40	240	6	15–15.5	.....	.....	54 *f*	.....	.....	.....	.....	.....
7×15	24.5–42.2	175–270	5.4–7.2	15–15.5	53–66	46	40–60	33–40	27–33	20–25	11	2.7
8×12 *g*	45	232	5.2	13–14	.....	.....	66	.....	.....	29	.....	.....
8×15 *g*	56	290	5.2	13–14	.....	.....	82	.....	.....	36	.....	.....
8×16	55	335–350	6.1–6.4	13–14	104	83	62–75 *f*	52	42	31	17	4.2
9×12 *g*	55.5	282	5.0	12.5	.....	.....	85	.....	.....	38	.....	.....
9×15 *g*	71	355	5.0	12.5	.....	.....	107	.....	.....	48	.....	.....
Reduction ratio, R_{80} *e*					17	32	46	95	127	181	254	345
Number of manufacturers					2	1	4	2	2	3	1	1

a Nominal inside.
b Recommended. Maxima are approximately a struck volume of 45% of mill volume.
c Installed power is usually 115 to 120% of consumed.
d Should not, in general, be exceeded.
e See Sec. 4, Art. 2.
f Based on <3/4-in. feed.
g One manufacturer only.

Table 24. Performance of wet rod mills

Plant	Morenci *d*		Colquiri	Old Dominion *d*	Colquiri		Desloge	Flat River *e*	Midvale *f*	Tennessee *g*	Federal
SPECIFICATIONS OF MILL											
Size, diam. × length, ft. *a*	3×7	3×7	3×8	4×8	4×8	4×10	4×10	5×9	5×10	6×12	6×12
Speed: R.p.m.	30	30	33.7	25	24.7	26.6	26.7	20.8	18	22	16.7
% of critical *a*	69	69	77	65	64	69	70	60	52	70	53
Rods: Weight, tons	3.2	3.55	3.5	8	7.5	8.5	11.2	14	10	.....	32
Diam. of renewals, in.	2	2	2	.....	3	3	1 1/2	2	2 1/2, 3	3	1 1/2
Material			*HCS*	.....	*HCS*	*HCS*	*HCS*	*g*	*HCS*	*HCS*	*HCS*
Liner: Type	Wave	Wave	Wave	.....	Wave	Wave	Smooth	Wave *r*	Wave	Shiplap	Wave
Material	*Cl*	*Cl*	*Mn*	*Mn*	*Mn*	*Mn*	*Mn*	*Mn*	*Mn*	*Cr-Mo*	*Mn*
Power: Installed, hp.			30	50	50	60	50	100	100	200	200
OPERATING DATA											
Feed rate: Tons new feed per hr.	9.8	18.3	2.1	8.7	14	11.5	10.4	5.2	14.6	50	105
Tons new feed per hr. per ton of rods	3.1	5.2	0.6	1.1	1.9	1.4	0.9	0.4	1.5	.....	3.3
Sizings: Test reference *o*	*1*	*2*	*3*	*4*	*5*	*6*	*7*	*19*	*20*	*22*	*9*
Feed: Limiting, in.	0.18	0.18	0.065	0.26	1.0	0.065	0.093	0.065	0.75	1.0	0.13
Product: *Mog*	10	8	28	20	10	20	20	65	20	20	10
Reduction ratios: Limiting sizes	3	2	3	8	15	2	3	8	23	30	2
80% sizes *b*	3.9	2.6	2.5	11.6	11.8	3.2	2.2	10.7	27	.....	1.6
Pulp, % solids	63	64	.....	74	.....	.....	73	66	75	66	60
Circulating-load ratio *c*	*CC*	*OC*	*OC*	*OC*	*OC*	*OC*	1.8	*OC*	0.6	*OC*	1.2
Power consumed: Hp.	18.6	22.5	27.6 *p*	39	46 *p*	55 *p*	50	95	68	195	180
Hp. per ton of rods	5.8	6.3	8	4.9	6	6.5	4.4	6.8	6.8	.....	5.6
Steel consumption, lb. per ton of new feed: Rods	0.64	0.39	0.22	1.72	0.46	0.44	0.21	2.97	1.2	0.65	*s*
Liners (or life, days)	0.23	0.14	.....	(120–150)	.....	.....	0.0023	.....	0.21	0.069	(10 yr.+)
PERFORMANCE DATA											
Tons per hp-hr.: New feed	0.53	0.81	0.080	0.22	0.30	0.21	0.21	0.05	0.21	0.26	0.58
<65-m. produced	0.11	0.15	0.019	0.12	.....	0.081	0.076	0.03	0.12	.....	0.083
<200-m. produced	0.053	0.10	0.018	0.064	.....	0.046	0.044	0.04	0.06	0.05	0.054

Plant	Mine La Motte	Copper Queen *h*	Old Dominion *i*	Cananea *j*	Moctezuma *k*	Potosi	Fresnillo *l*	Flat River *e*	Balmat	Chino *m*	Ray *n*
Specifications of Mill											
Size, diam. × length, ft. *a*	6×12	6×12	6×12	6×12	6×12	6×12	6 1/2×12	6 1/2×12	6 1/2×12	7×10	9×12
Speed: R.p.m.	16.7	17.5	17.5	16	17.5	17	17	16.9	16.5	19.9	14
% of critical *a*	53	56	56	51	56	54	56	56	55	69	55
Rods: Weight, tons	25	19 *v*	21	22	18	22	.....	27.5	35	21	50
Diam. of renewals, in.	2	3	3	3 1/4	3	3	3	2	2	3	3 *am*
Material	*HCS*	*w*	.....	*aa*	*ac*	*HCS*	*HCS*	*q*	*HCS*	*HCS*	*HCS*
Liner: Type	Wave	.....	.....	Wave	10-wave	Wave	.....	Wave	Wave	.....	Wave *ak*
Material	*Mn*	*x*	.....	*Cl, ab*	*Cl, ad*	*Mn*	*Mn*	*Mn, ag*	*Mn*	*ah*	*aj*
Power: Installed, hp.	200	150	150	150	.....	125	150	200	240	175	350
Operating Data											
Feed rate: Tons new feed per hr.	33.3	22.3	11.1 *z*	43.3	18.3	20.8	15.5	35.5	52.0	62.5	125
Tons new feed per hr. per ton of rods	1.3	1.2	0.5	2.0	1.0	0.9	.....	1.3	1.5	3.0	2.5
Sizings: Test reference *o*	*10 u*	*14*	*15*	*16*	*17*	*8*	*21*	*18*	*12*	*13*	*11*
Feed: Limiting, in.	0.18	1.5	0.75	1.0	1.5	0.5	2.0	0.13	0.5	0.26	0.75
Product: *Mog.*	20	20	35	10	6	28	8	14	28	8	8
Reduction ratios: Limiting sizes	6	45	47	15	11	22	21	3	22	3	8
80% sizes *b*	.....	9.1	56	33	30	42	30	3.6	21.7	5.5	10.5
Pulp, % solids	75	75	.....	.....	78	65	.....	66	73	65	70 *al*
Circulating-load ratio *c*	1.0	*OC*	2.0	*CC*	*OC*	2.0	*OC*	*OC*	*OC*	*OC*	*OC*
Power consumed: Hp.	180	125 *p*	130	110	120 *p*	120	154	190	177	155	352 *an*
Hp. per ton of rods	7.2	6.6	6.2	5.0	6.7	5.4	.....	6.9	5.0	7.4	7.0
Steel consumption, lb. per ton of new feed: Rods	0.2	1.34	.....	0.6	0.99 *ae*	0.55	1.66	0.38	1.3	0.4	0.38 *al*
Liners (or life, days)	(2 yr.+)	*y*	.....	0.133	0.24	1.0	0.22 *af*	(7 yr.)	0.07	(450)	0.05
Performance Data											
Tons per hp-hr.: New feed	0.18	0.18	0.09	0.39	0.15	0.17	0.10	0.19	0.29	0.40	0.35
<65-m. produced	.....	0.10	0.051	0.147	0.05	0.11	0.040	0.07	.....	0.113	0.085
<200-m. produced	.....	0.059	0.035	0.102	0.03	0.058	0.028	0.04	.....	0.072	0.063

a Nominal.
b Sec. 4, Art. 2.
c Art. 10.
d Ed. 1.
e IC 6658.
f IC 6492.
g 153 A 345.
h IC 6404.
i IC 6467.
j IC 6261.
k IC 6358.
l 112 A 736.
m IC 6394.
n 134 A 327.
o Numbers refer to columns in Table 24 *a*.
p Estimated.
q C, 0.6–0.75%; Cr, 0.3–0.5; Mn, 0.5–0.7; Si, 0.15–0.25; S, 0.04 max.; P, 0.04 max.
r Weight 19,660 lb. Bolted and zinced in with 3,900 lb. Zn.
s 30 rods per week.
u Feed, <4-m.
v Best weight over the range of 12 to 19 tons.
w C, 0.96%; Si, 0.19; Mn, 0.81; S, 0.04; P, 0.03. Brinell, 295.
x C, 2.68%; Si, 1.22; Mn, 0.27; S, 0.177; P, 0.457. Brinell, 252.
y 100,000 to 110,000 tons.
z Maximum. Capacity of 2-stage circuit was increased about 10% by closing primary stage.
aa C, 0.87%; Si, 0.12; Mn, 0.62; Cr, 0.25; S, 0.05; P, 0.02%.
ab 1 1/2-in. plank backing.
ac C, 0.85%; Si, 0.14; Mn, 0.62; Cr, 0.25; S, 0.03; P, 0.03%.
ad Local. 5-in. excluding wave. End liners, single castings. About 15% scrap remelted.
ae Scrap loss, 8 or 10%.
af 0.46 for white cast iron.
ag Bolted and backed with 4,800 to 5,600 lb. Zn.
ah Shell, white iron; ends, Mn. Total weight, 38,650 lb.
al Reject of about 4%, in 6- to 15-in. lengths, caught in discharge box.
aj White iron, 2 to 3 in. thick. Liner bolts, 1 1/2-in. 3/4-in. wood backing.
ak Mn lifter bars 3 5/8 in. high, spaced 11 in.; life 350 to 400 days.
al Rods pound, if less dense.
am Charged every 4 days; wired in bundles of 8; requires 20-min. stop.
an Maximum starting torque, 200% of full-load torque.
Cr-Mo Chrome-molybdenum steel.
CC Closed circuit.
OC Open circuit.

Table 24*a*. Sizing analyses for rod mills, Table 24

Size	Mesh					3	4	6	8	10	14	20	28	35	48	65	100	150	200	<200
	Inches *a*	1	3/4	1/2	3/8	0.263	0.185	0.131	0.093	0.065	0.046	0.033	0.023	0.016	0.012	0.0085	0.0058	0.0041	0.0029	.....
Ref. No.	Material	Cumulative per cent. retained																		
1	NF						0.1	6.6	23.7	37.1	47.5	56.0	64.4	71.0	76.3	80.2	84.0	86.5	87.8	12.2
	MP									0.3	2.4	9.5	24.3	38.7	50.4	59.1	67.1	72.3	75.0	25.0
2	NF						0.1	9.5	31.0	46.9	60.5	71.6	82.0	89.0	92.9	94.9	96.0	96.7	97.1	2.9
	MP								0.8	5.7	17.7	33.3	50.1	62.6	71.1	76.5	81.2	84.0	85.7	14.3
3	NF									0.8	4.9	17.6	33.7	51.6	65.8	83.0	91.2	.....	97.6	2.4
	MP												1.9	9.3	22.3	58.3	63.6	.....	74.0	26.0
4	NF					3.2	14.0	32.0	47.4	59.0	67.9	75.5	82.8	87.6	91.3	93.8	95.8	97.3	97.9	2.1
	MP										0.1	0.9	5.3	14.4	28.1	41.3	53.9	64.0	69.5	30.5
5	NF					25.0	48.5	62.1	73.4	82.4	90.3	94.0	95.4	96.4	97.0	.....	.....	.....	.....	3.0 *b*
	MP									1.1	3.7	10.8	20.9	33.9	43.6	56.8	64.6	.....	75.1	24.9
6	NF										11.7	31.1	50.4	62.9	73.1	85.6	91.5	.....	99.0	1.0
	MP												4.2	11.7	22.9	46.5	60.5	.....	76.9	23.1
7	CF								1.0	7.3	18.9	36.4	63.1	86.6	95.3	98.3	91.0	99.4	99.6	0.4
	MP											1.0	9.7	31.9	49.6	61.6	69.5	74.5	78.4	21.6
8	NF			2.8	8.7	22.5	31.9	42.1	50.0	56.7	63.4	68.6	73.3	77.8	81.4	84.6	87.3	89.5	91.3	8.7
	CF			0.9	2.9	7.5	10.6	14.0	16.7	18.9	21.1	22.9	24.4	37.1	51.4	66.0	76.5	83.8	88.2	11.8
	MP													10.6	24.2	40.7	54.8	65.6	73.0	27.0
	CO													3.8	9.6	21.5	35.8	47.7	57.2	42.8
9	CF							0.1	4.9	15.2	27.2	46.8	65.3	82.4	92.3	97.3	99.0	99.4	99.7	0.3
	MP									1.7	7.9	23.6	41.3	60.9	73.5	82.8	86.3	88.8	90.3	9.7
10	MP *c*											0.4	2.8	11.1	31.4	47.7	62.5	71.3	78.2	21.8
11	NF		3.9	15.9	27.6	.....	.....	.....	.....	.....	62.2	.....	.....	.....	.....	80.0	81.8	.....	84.4	15.6
	MP										19.1	.....	.....	.....	.....	55.9	60.5	.....	66.7	33.3

12	NF				5.3	17.1	27.4	35.3	41.2	.....	.....	.....	.....	.....	.....	.....	.....	.....	.....	58.8 *b*
	MP														17.8	32.2	50.2	62.2	75.0	25.0
13	NF						0.2	2.3	9.8	18.6	28.9	38.1	45.4	51.9	56.9	62.0	67.2	72.8	78.1	21.9
	MP								0.4	1.4	4.6	9.0	19.4	28.8	39.0	46.6	56.4	62.2	66.8	33.2
14	NF	19.8 *d*	36.8	48.2	.....	62.6	67.5	70.9	73.3	75.8	77.2	78.6	80.2	81.5	82.8	83.9	85.2	86.0	86.6	13.4
	MP											0.9	3.8	9.1	17.9	27.5	40.5	48.6	54.4	45.6
15	NF		2.3	16.0	27.9	.....	.....	.....	.....	61.8	.....	.....	.....	74.4	80.0	82.6	85.1	87.0	88.8	11.2
	MP													19.0	35.9	58.5	67.6	76.6	79.5	20.5
	CS													21.6	43.4	72.1	82.7	90.1	93.3	6.7
	CO														5.5	19.5	28.9	40.7	47.8	52.2
16	NF	4.7	.....	37.9	.....	53.4	59.3	63.9	68.3	72.2	75.7	78.3	81.0	83.4	85.3	87.3	89.1	90.5	91.3	8.7
	CS							1.0	4.2	12.9	27.5	48.5	69.6	83.0	89.5	93.3	95.4	96.4	96.9	3.1
	CO									0.6	3.5	10.3	20.1	30.1	38.8	47.5	55.1	60.3	63.5	36.5
17	NF	18.8 *e*	29.0	40.8	.....	51.8	58.8	65.8	70.4	74.6	78.5	81.4	84.3	86.1	87.8	89.2	91.6	92.6	93.0	7.0
	MP							0.4	1.3	4.0	11.6	20.3	32.1	41.2	49.7	55.0	65.1	69.8	72.4	27.6
18	NF							0.5	8.3	24.3	38.5	47.3	66.5	82.7	90.3	93.7	94.8	95.5	96.0	4.0
	MP										0.2	0.5	11.2	28.9	44.4	58.9	64.1	69.0	72.8	27.2
19	NF									2.6	8.0	16.4	25.7	36.1	44.6	60.2	72.0	82.5	88.8	11.2
	MP															1.4	4.0	9.9	18.3	81.7
20	NF			6.1	.....	18.9	38.1	44.7	.....	54.0	57.5	61.8	66.3	71.6	75.9	79.6	83.3	84.6	87.4	12.6
	MP											0.4	1.8	9.2	25.5	44.7	59.2	64.6	72.8	27.2
	CS											0.7	2.4	14.4	38.9	62.7	80.2	85.0	91.2	8.8
	CO											0.2	0.9	4.4	12.1	24.8	40.8	46.3	60.5	39.5
21	NF	4.1 *d*	21.4	46.6	61.0	71.2	78.3	82.0	85.8	88.8	90.9	92.7	93.9	94.8	95.6	96.4	97.3	98.0	98.2	1.8
	MP								0.2	1.6	5.4	14.2	22.8	33.6	44.4	52.5	60.4	67.2	70.3	29.7
22	NF	3.5	9.4	20.8	.....	41.5	.....	.....	.....	.....	.....	.....	.....	.....	.....	.....	.....	.....	93.2	6.8
	MP											1.1	6.0	14.9	27.4	42.1	55.6	66.4	74.2	25.8

a ***CF***, composite feed; ***CO***, classifier overflow; ***CS***, classifier sands; ***MP***, mill discharge; ***NF***, new feed.
b Through last screen.
c Feed all <4-m. *d* All <2-in. *e* All <1 3/4-in.

Table 25. Performance of wet rod mills (*After Manufacturers*)

Plant or ore	Source *b*	Size of mill, ft.	Rod load, tons	Circuit *a*	Tons new feed per hr.	Power consumed		Feed size		Product		Performance Ratings		
						Total	Per ton of rods	Limiting, in.	<200-m., %	*Mog*	<200-m., %	Tons <200-m. produced per hr.	Tons <200-m. produced per hp-hr.	Tons feed per hp-hr.
Tin ore	MS	2×4	0.8	*O*	0.92	6	7.5	1	.....	20	.....	.....	.....	0.15
Gold ore	MS	3×8	4.3	*Cl*	2.5	26	6.1	0.5	10	100	71	1.8	0.069	0.097
Nickel ore	MS	3×8	4.0	*Cl*	2.1	25	6.2	0.38	12	35	35	0.74	0.030	0.084
Copper ore	MS	3×8	4.5	*Cl*	2.7	28	6.2	1.5	.....	48	.....	.....	.....	0.067
Sandstone	HC	4×8	6.0	*Scr*	22	45	7.5	0.18	.....	8	.....	.....	.....	0.49
Gold-quartz ore	MS	4×10	8.5	*Cl*	9	60	7.1	1	2	35	65	5.7	0.095	0.15
Lead-zinc-iron ore	MS	4×10	10	*Cl*	8	.....	7.1 *e*	1	2	35	52	4	0.067	0.22
Lead-silver ore	MS	5×8	9	*Cl*	7.1	82	9.1	0.5	10	65	52	3	0.037	0.078
Copper ore	MS	5×10	13	*O*	29.3	76	5.8	0.5	10	20	38	8.2	0.108	0.39
Gold-quartz ore	MS	5×10	12	*O*	24	96	8.0	2	1	6	23	5.3	0.055	0.25
Lead-zinc ore	MS	5×10	11	*Scr*	10.9	95	8.6	1	.....	20	.....	.....	.....	0.11
Copper ore	MS	5×10	12	*Cl*	16.7	75	6.2	0.5	10	35	80	11.7	0.156	0.22
Lead-silver ore	MS	5×12	15	*Cl*	16	102	6.8	0.5	10	28	34	3.8	0.037	0.16
Copper ore	MS	6×12	19	*O*	21.7	135	7.1	1	2	28	44	9.6	0.071	0.16
Copper ore	MS	6×12	19	*O*	42.6	140	7.4	1.25	2	8	24	9.4	0.067	0.30
Copper ore	MS	6×12	19	*Cl*	10	140	7.4	1.5	1	65	77	7.6	0.054	0.078
Quartz-slate	HC	6×12	18	*Cl*	8.3	125	6.9	2	1	48	65	5.4	0.043	0.066
Copper ore	MS	6×15	27	*Cl*	21.4	194	7.2	1.5	.....	28	.....	.....	.....	0.11
Copper ore	MS	6×15	27	*Cl*	22.9	273	10.1	0.75	10	48	56	10.5	0.038	0.083
International Nickel	MS	6 1/2×12	25	*Cl*	20.8	201 *d*	8.0	0.185	20	48	57	7.5	0.037	0.10
International Nickel	MS	6 1/2×12	23	*Cl*	31.3	203 *f*	8.8	0.185	20	48	45	7.8	0.038	0.15
International Nickel	MS	6 1/2×12	27	*Cl*	41.7	304 *c*	11.3	0.25	.....	28	.....	.....	.....	0.14
Gold-quartz-ore	MS	6 1/2×14	27	*O*	37.5	165	6.1	0.25	15	8	30	5.6	0.034	0.23
Iron	MS	9×12	.....	*Scr*	77	370	.....	0.75	.....	20	.....	.....	.....	0.21

a ***Cl***, Circuit closed by classifier; ***O***, Open circuit; ***Scr***, Circuit closed by screen.

b MS = Mine & Smelter Supply Co., letter to Ed. HC = Hardinge Co. catalogue.

c 24.2 r.p.m.

d 16.4 r.p.m.

e Estimated.

f 18.4 r.p.m.

Peripheral discharge. A form of trunnion-mounted mill arranged for discharge around the shell periphery just in front of the discharge head has been advertised.

Construction. See Art. 4.
Rods. See Art. 6.

Manufacturers' data, as published, are summarized in Table 23. The catalogue ratings for tonnage to a given *mog* compared with 42 performance figures show 18 catalogue ratings higher than performances, 18 lower, 6 in accord, and an average excess of catalogue over performance for the 42 mills of only 4%. Feed size makes no difference as to direction of the discrepancies. The reduction ratios in the mills are definitely less than those implied in the catalogues. Catalogue ratings and mill performances are close together over the range of product sizes from 20- to 35-m.; the catalogues are, however, 10 to 20% on the conservative side in the coarser range, while for 48- and 65-m. the catalogue figures, especially for the larger mills, should be shaded 25 to 50%. Sufficient field data for comparison at yet finer meshes are not available, but the weight of practice is definitely against the use of rod mills in such service.

Capacities for very hard and tough ores will fall to about 50% of those for average ore, while those for soft easy-grinding ores may be double the average figures.

Dry rod-milling requires somewhat lower speeds (5 to 10%) and capacities are from 50 to 70% of those quoted (Table 23) for wet grinding, while making only about one-half of the reduction ratio, *i.e.*, reduction tons per hr. dry are from 25 to 35% of those obtainable wet. Reduction in power consumption is only slightly greater proportionately than the reduction in speed, which leaves the efficiency markedly lower. See also Sec. 6.

Performances at various plants are shown in Tables 24 and 25.

Size of feed. In modern practice feed is usually from 1/4 to 1-in. maximum.

Rose and Cramer (*IC 6358*) early reported from MOCTEZUMA that 1 3/4-in. feed was too coarse for 6-ft. primary mills at that plant, especially for the harder ores. Most manufacturers have not been willing, over the past several years, to recommend rod mills for feeds coarser than 1-in. The larger particles tend to resist crushing for a considerable time unless struck favorably, and until crushed will, of course, spread all pairs of rods between which they pass and thus remove effective crushing load from much of the finer material between such rods. It is possible that the newer large-diameter mills (*e.g.*, 9-ft.) and the smaller mills at high speeds may be able to handle somewhat coarser feeds if the ores are not too hard. The advantage of a larger diameter for treating coarser feeds is shown in Table 26. Both mills are at high speeds. Circuit comprises an open-circuit rod mill followed by a 5×10-ft. ball mill in closed circuit.

Table 26. Rod-mill grinding in Isabella section, Tennessee Copper Co. (*153 A 345*)

Rod mill: Diam. × length, ft.	5×10	6×9
Rods, diam., in.	3	3
Speed: R.p.m.	27.2	24.4
% of critical	73	71
Tons new feed per 24 hr.	725	825
Tons <200-m. produced per 24 hr. by circuit	314	417
Feed: Limiting size, in.	3/4	1 1/4
Product of two stages: Limiting mesh.	35	48
% <200-m.	52.0	54.8
Power consumption of two stages:		
Hp-hr. per ton of new feed	6.9	8.2
Hp-hr. per ton of <200-m. produced	15.9	16.2
Steel consumption, lb. per ton:		
Rods	0.647	0.697
Balls	0.632	0.632
Manganese-steel liners, total	0.108	0.118
Cost, cents per ton:		
Grinding only	14.5	13.6
Crushing and grinding	22.4	18.5

Material finer than 1/4-in. is not, normally, sent to rod mills except where granular products are desired, as for gravity or wet magnetic concentration, production of concrete sand (*9 #6 Civil Eng'g 341*), and the like. But see INTERNATIONAL NICKEL (Sec. 2, Fig. 144) and p. 51.

Circulating load is normally smaller in primary rod mills than in primary ball mills. Tests at INTERNATIONAL NICKEL (*58 CMJ 665*) showed that while with ball mills capacity and efficiency both increased materially with increase in circulating load from 200 to 800% (see Art. 10), high loads were neither necessary nor desirable with rod mills.

Size of product in open-circuit rod milling depends on size of feed, character of rock, and feed rate. Characteristically the product from an average ore contains about 5% of tramp oversize (material on first $\sqrt{2}$-ratio screen finer than the limiting screen); the remainder, when plotted as in Fig. 27, shows a maximum concavity below a straight-line product curve of about 20%. Curves for hard ores and/or high feed rates fall in the shaded zone above the full-line average curve, while soft ores and/or low feed rates yield products with very small amounts of tramp oversize and relatively high proportions of fine sand, the curves falling in the shaded zone below the average curve. The heavy dotted line is an indication of what may be expected from the high-tonnage mills acting as secondary crushers, yielding high percentages of tramp oversize and relatively high percentages of fine sand, easily produced by rounding off, the percentages of coarser sands which must be produced by breakage being correspondingly small.

Characteristic curve for product of a circuit closed by a mechanical classifier is shown in Fig. 28. The coarse end of the curve is substantially the same as that for open-circuit grinding, but the fine end is slightly more concave. Essentially, however, closing the circuit with a classifier simply reduces limiting size to about half that of the mill discharge without changing the relative size distribution in the product.

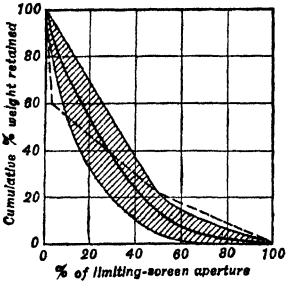

FIG. 27. Characteristic rod-mill product, open-circuit grinding.

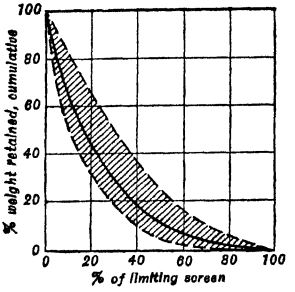

FIG. 28. Characteristic rod-mill product, closed-circuit grinding.

As of the 1930's, about half the rod mills in use were reducing to 20 or 28 *mog*, about 40% to 6 or 10 *mog*, and 10% to 35 or 48 *mog*. As of 1943 the trend is definitely toward increase in the percentage working to coarse *mogs*, while the use for *mogs* finer than 28 is exceptional.

Rod-mill product is remarkably similar in size distribution to roll product, as may be seen from Fig. 29 (*57 A 361*). This similarity is, of course, to be expected, in the light of Haultain and Dyer's work (Art. 2), since the rods in a slow-moving mill reasonably loaded act almost entirely like a large number of rolls with light spring pressures.

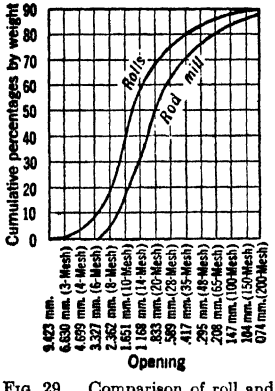

FIG. 29. Comparison of roll and rod-mill products (*after Watt*).

Coghill and Anderson (*117 J 1006*) warn that under certain circumstances the rod mill may, even while making a product that is not, as a whole, unduly slimed, nevertheless slime the mineral constituents excessively, and that the usual statement that the rod mill is a granulator and not a slimer is to be accepted with caution and discrimination. Table 27, giving the results of a thorough sizing-assay test on a rod mill crushing from 0.5- or 0.75-in. feed to 20 *mog*, is cited by the authors in support of this contention. Comparing the percentage of <200-m. in the product with that in products ground to the same limiting size in ball mills (Tables 30*a*, 32*a*, and 33*a*) it is apparent that the rod-mill product contains more slime and that the criticism is justified. But sliming has not been differential, as the authors imply; actually relatively more gangue than sulphide has been slimed in the case of silver, gangue and sulphide have been substantially equally slimed in the case of zinc, and only in the case of the lead has sulphide been slimed more than gangue; even here the differential is small. On the other hand, there has been impoverishment of the sizes from 20- to 200-m., which are the sizes in which table concentration is most effective.

Reduction ratios (limiting) vary, in the operations reported, from 2 to 47. Ratios above 30 represent old practice. Of the operations recorded in Table 24, 30% are working at ratios from 2 to 3 and 50% at ratios less than 8. No correlation appears to exist between efficiency, as measured in tons of production per hp-hr., and reduction ratio.

Capacity. For discussion of controlling factors see Art. 14. Analysis of the performance figures on 44 installations, given in Tables 24 and 25, is summarized in Fig. 30. Performance will fall to 25% of the graphed values for hard coarse feeds (>$^3/_4$-in.) to mills of small diameter, and may rise to 50% above the curves for fine feeds which grind easily. To estimate capacity for a given mill under given average conditions, multiply together the performance value from Fig. 30, the horsepower consumption estimated from Fig. 31, and the inch value of the *mog*. Adjust as above for unusual conditions.

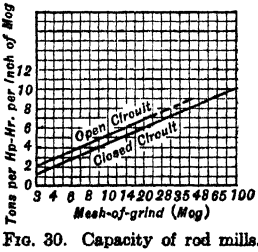

FIG. 30. Capacity of rod mills.

Table 27. Sizing-assay test of rod-mill grinding (*After Coghill and Anderson*)

Material	Screen, mesh	Solids, per cent. weight	Assay, per cent. Zn	Per cent. of total Zn	Assay, per cent. Pb	Per cent. of total Pb	Assay, oz. Ag per ton	Per cent. of total Ag
Feed	3	36.9	1.84	21.4	1.00	20.4	1.66	24.1
	4	13.2	3.04	12.6	1.88	13.6	3.00	15.5
	6	6.3	3.60	7.2	1.85	6.4	2.74	6.8
	8	6.2	3.33	6.5	1.86	6.3	2.24	5.5
	10	5.4	3.37	5.7	2.47	7.3	2.80	5.9
	14	3.4	3.79	4.1	2.82	5.3	2.87	3.9
	20	3.8	4.02	4.8	3.10	6.4	2.50	3.7
	35	4.8	5.75	8.7	3.50	9.3	3.35	6.3
	48	2.3	6.63	4.7	3.00	3.7	3.20	2.8
	65	1.9	5.75	3.4	2.55	2.6	3.00	2.2
	100	2.2	5.40	3.8	2.10	2.6	2.60	2.3
	150	2.4	5.50	4.2	1.80	2.4	2.70	2.6
	200	1.0	5.75	1.7	1.43	0.7	2.52	1.0
	260	1.2	6.20	2.3	2.50	1.6	3.80	1.7
	325	0.7	4.40	1.0	2.00	0.8	4.10	1.2
	<325	8.4	3.00	7.9	2.25	10.4	4.40	14.5
Total		100.0	3.17	100.0	1.82	100.0	2.54	100.0
Product	20	0.9	1.49	0.5	0.44	0.2	1.52	0.6
	35	8.9	1.85	5.7	0.52	2.9	1.26	4.7
	48	10.6	2.47	9.1	0.78	5.1	1.44	6.4
	65	11.1	2.73	10.5	0.98	6.9	1.60	7.6
	100	12.6	3.24	14.2	1.55	12.3	1.94	10.4
	150	11.2	3.40	13.3	1.91	13.6	2.22	10.6
	200	3.9	3.29	4.4	1.32	3.2	1.74	2.9
	260	5.6	3.60	7.0	2.34	8.3	2.50	6.0
	325	3.2	3.55	4.0	2.03	4.1	2.46	3.4
	<325	31.9	2.83	31.3	2.14	43.3	3.50	47.5
Total		100.0	2.88	100.0	1.58	100.0	2.35	100.0

Example. To estimate capacity, on an average ore, of a 5×10-ft. mill, charged to 40% of mill volume, grinding from 3/4-in. to 8-m. open circuit. Read from Fig. 31, 2,600 lb. charge per ft. of nominal length and 6.85 hp. per ton of charge. Read from Fig. 30, 4.4 tons per hp-hr. per in. of *mog*. Read from Table 28, Sec. 19, 8-m. = 0.093 in. The tons per 24 hr. = (2,600 × 10 × 6.85 × 4.4 × 0.093 × 24)/2,000 = 875. For feed of larger size x multiply the above tonnage by the ratio $3/4x$. For harder or softer ores apply factors derived from Tables 44 to 49. For speeds different from the averages of Table 24, multiply by the ratio of the new speed to the average from the table for the corresponding diameter.

Capacity in tons per hr. per ton of rods averages 2.6 for 6 to 14 *mog*, 1.2 for 20 *mog*, 1.0 for 28 *mog*, and 0.5 for 35 and 48 *mog*, assuming feed <3/4-in. or smaller, and medium ore; add or subtract 50% for soft and for hard ores respectively.

Power consumption varies primarily with weight of rods and diameter of mill as indicated by Fig. 31. It is to be noted that the response in power draft to a change in load is very much less for large mills than for small. Speed has, of course, a marked effect (*vide* the 6 1/2-ft. mills in Table 25), but the curves of Fig. 31 are reliable enough for estimate despite that speed was ignored in plotting the values from reported performances. Consumption is above average for rod loads far below normal, high ribbing on liners, high-moisture feed pulp, exceptionally hard ore, overspeeds, and relatively short mills. Mean consumption for mills of normal length-diameter ratio of approximately 2 : 1, and normal loading (charge volume about 40%) averages about 6.9 hp. per ton for mills up to 7-ft. diameter.

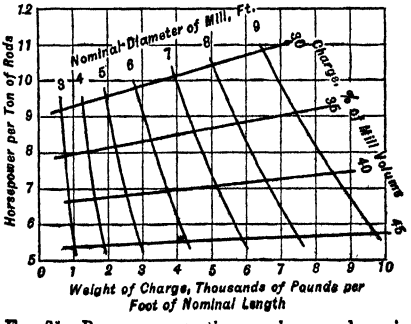

FIG. 31. Power consumption *vs.* charge volume in rod mill (averaged from Tables 24 and 25; speed included in averaging).

Operating relationships between power consumption, feed rate, and *mog* for mills of different diameters are shown in Fig. 32.

Efficiency. Figures for power consumed per ton of ore fed to the mill, disregarding feed size, size of mill, hardness of ore, and operating conditions, cluster around 0.40 to 0.45 tons per hp-hr. to 8 and 10 *mog*, 0.20 to 14 and 20 *mog*, 0.15 to 28 and 35 *mog*, 0.10 to 48 *mog*, and 0.07 to 65 *mog*. (See Fig. 32.) Material through 65-m. is produced in grinding to 28 *mog* and coarser at a somewhat higher average rate (0.10 tons per hp-hr.) than when the *mog* is 65. Reported performances are summarized in Fig. 33.

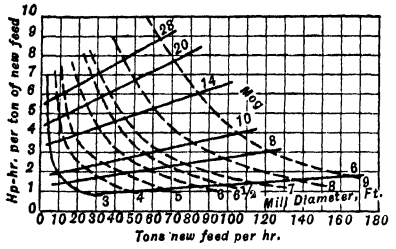

FIG. 32. Power consumption *vs.* feed rate and *mog* for rod mills.

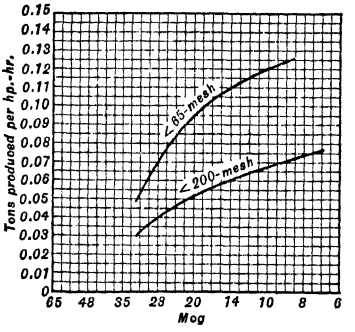

FIG. 33. Production of fine sizes in rod milling.

Speed for 26 mills reporting ranged from 38 to 68% of nominal critical speed. The low figures represent old practice or underloaded mills with speed cut down to save power input. Modern practice favors the higher operating speeds. The final limiting factor is the necessity to prevent throw of rods away from the shell and load at the top, since this tends to tangle the load. The range of satisfactory speeds for rod mills is shorter than that for ball mills.

Exhaustive tests at TENNESSEE COPPER CO. (*153 A 345*) showed that in single-stage closed-circuit grinding from 1-in. to 48 *mog* in a 6×12-ft. mill, increase in speed from 17 to 19 r.p.m. increased daily tonnage from 900 to 990, decreased power consumption from 13.9 to 13.3 hp-hr. per ton of feed, and gave a product containing 5.8% >65-m. and 58.3% <200-m. as against 6.0% >65-m. and 54.8% <200-m. at the lower speed. In open-circuit work, acting as a primary followed by two closed-circuit ball mills in parallel, the same mill was operated at 19 and 22 r.p.m. Operating data follow (19 r.p.m. first): Feed rate, tons per hr., 52.2, 51.8; hp-hr. per ton, 2.98, 2.70; size of feed, cumulative %:

	>1/2-in.	1/2~1/4	1/4~200-m.	<200-m.
R.p.m. 19	17.8	32.2	92.4	7.6
Do. 22	20.8	41.5	93.2	6.8

Products were substantially identical with 1% >20-m. and 25 to 26% <200-m. Consumption of manganese-steel shiplap liners was 0.088 and 0.069 lb. per ton, and of 3-in. high-carbon steel rods, 0.687 and 0.675 lb., respectively. Relative costs on the assumption of 15¢ per lb. for liner, 5¢ per lb. for rods, and 1¢ per kw-hr. for power are 6.97¢ and 6.43¢ per ton with a further credit of a fraction of a cent to the high-speed mill for the coarser feed taken.

The experience at TENNESSEE and at INTERNATIONAL NICKEL (p. 51) should answer the fears of operators for the mill liners at high speeds. C. F. Thompson of Mine & Smelter Supply Co. (*PC*) states that they recommend 73.5% of critical as maximum.

Pulp density ranges from about 75% solids for coarse feeds to 60% in fine-intermediate grinding. See also Art. 6.

Attendance. See Art. 18.

Lost time should be not more than 1%. The principal causes are charging rods and relining. Higher losses are usually due to improper bolting of liner, necessitating frequent tightening of bolts, and to tangling of rods. The latter is due either to too high speeds or, if worn rods bend instead of break, to the use of rods with too low carbon content.

Lubrication. See Art. 19.

Costs. The principal items are power and steel. Careful estimate should be based on local costs for these items and for labor applied to the performance figures given. For purposes of rough estimate, primary open-circuit grinding to 6- or 8-m. should cost from 5 1/2 (RAY, *134 A 327*) to 10¢ per ton, and 20-m. grinding 10 or 15¢ for average ores (1930's basis). Grinding to 48-m. will cost 20 to 30¢ per ton under best conditions unless the ore is definitely softer than average.

Use. Rod mills were originally adopted to obtain the economies of tumbling-mill grinding and yet make a granular product suitable for gravity concentration. They were highly successful in this field. With the switch to all-flotation in the mills in which they were used, it was, naturally, attempted to have them do the finer grinding thus made necessary. The trend of the last 15 years is superficially conflicting in that while in many plants the rod mills have been changed over to ball mills, at others they have been retained for fine grinding, and some new installations have been made for this service. This indicates, of course, that the matter is one of close decision. Conclusive experimentation is difficult and expensive, and results are hard to interpret. Individual predilections and the expense of the change-over, involving ordinarily a change in mill speed, and provision of larger classifiers and transport means for handling the larger circulating loads necessary, have played a large part in the decisions. Predominating opinion at present would seem to be, however, that when liberation demands grinding to 65-m. or finer the rod mill should not be used as a finishing mill, while for 35- or 48-m. finishing the rod mill can do satisfactory work and that a change involving any considerable expense would not be justified, particularly if the ore is not too hard and the feed to the grinding circuit is relatively coarse.

At INTERNATIONAL NICKEL (*58 CMJ 665*) 6 1/2×12 1/2-ft. (I.D.) rod mills were installed in 1928 for one-stage grinding of 500 tons per 24 hr. from 4-m. to 48 *mog*. In 1938 the same mills were grinding 750 tons each through the same range. Conditions of operation follow:

Year	Rod load, tons	R.p.m.	Classifier	Circ. load, %	Hp. consumed
1928	25	16 1/2	Bowl	175	201
1938	22.5	18 1/2	FX	200	203

Screen tests, cumulative per cent. retained

	>4	8	14	28	35	65	100	150	200	<200
Mesh.....										
Feed.....	1.2	23.4	41.3	54.9	60.8					
Product 1928...						6.2	15.6	29.4	43.1	56.9
Product 1938...						6.1	15.4	32.6	52.9	47.1

The capacity of one mill was run up to 990 tons per 24 hr. by increasing speed to 24.2 r.p.m., rod load to 27 tons, and power draft to 305 hp. Screen analyses and hp. per ton of new feed were identical with the lower-tonnage performances.

Exhaustive tests comparing ball-milling on the same feed were run, one rod mill was converted to a grate mill with 33-in. discharge opening. With ball load to the mill axis and 16 1/2 r.p.m. power draft dropped to 150 hp. and capacity fell accordingly, *i.e.*, tons per hp-hr. were the same but capacity was off 25%. Increase in speed to 18 1/2 r.p.m. restored capacity partly; further increase to 23 1/2 r.p.m. was necessary to get back to a draft of 200 hp. Under these conditions the ball mill and parallel rod mill ground 750 t.p.d. each to the same grind, but circulating loads were 800 and 200%, respectively. (See Art. 11 for effect of circulating load on ball-mill capacity.)

It was found that while as high as 1,200% circulating load could be carried with the FX classifier in the ball-mill circuit, with corresponding increase in capacity, 400% was the maximum with the rod mill; above this figure the return sand practically stopped grinding action by the rods and the circuit ran away.

A test run was made at INTERNATIONAL NICKEL closing the rod-mill circuit with a Hum-mer screen equipped with stainless-steel cloth. The product size was

Screen.....	>65	100	200	<200
Per cent. retained.....	1.3	11.0	43.2	56.8

Circulating load was reduced but selective overgrind of sulphide was lacking and metallurgy suffered correspondingly.

At TENNESSEE (*153 A 345*) the 1928 grinding plant comprised three 6×12-ft. rod mills operating with one mill as an open-circuit primary and the other two in parallel as closed-circuit secondaries. Feed was Symons disk product with 0.6% >1-in., 39.3% >1/4-in., and 7.2% <200-m. The grinding mills were charged with 3-in. rods and operated at 17 r.p.m., grinding 900 tons per 24 hr. to 6% >65-m. and 54.8% <200-m. at an expenditure of 14.0 hp-hr. per ton and consumption of 0.2 lb. of manganese-steel liner and 2.736 lb. of rods per ton of feed. In 1938, with a slightly coarser feed (3.5% >1-in., 41.5% >1/4-in.; 6.8% <200-m.) the three mills were arranged as one open-circuit primary rod mill running at 22 r.p.m. followed by two closed-circuit ball mills in parallel, also at 22 r.p.m. Feed rate was 1,250 t.p.d., product was 4% >65-m. and 59.7% <200-m. Power consumed was 11.4 hp-hr. per ton and steel consumption 0.113 lb. of liner, 0.695 lb. of rod, and 1.161 lb. of balls. The indicated saving is 6 to 7¢ per ton.

At HOLLINGER (*134 A 331*), with a moderately hard ore, old practice was to crush through 3/4-in. and then grind through 35-m. with a 7×15-ft. open-circuit rod mill followed by two 6×16-ft. closed-circuit pebble mills in series. After a 2-year testing program a new crushing and grinding plant was built comprising crushing to 3-m. and grinding to the same limiting size in the 7×15-ft. mills, converted to low-discharge grate-type ball mills, operating in closed circuit with large FX classifiers. Comparative results are given in Table 28.

At RAY (*154 J 327*) a 9×12-ft. mill (Table 24) in parallel with rolls operating in closed circuit with screens produced 3,000 tons per 24 hr. of ball-mill feed of substantially the same fineness as the roll product at a cost of 5.5¢ per ton *vs.* 8¢ per ton for roll crushing. The difference was largely in cheaper steel. In the ensuing change each 9×12-ft. rod mill replaced four 42-in. Garfield rolls. At REPUBLIC

Table 28. Grinding at Hollinger

	Two-stage; one rod and two pebble mills	One-stage ball milling
New feed: Tons per 24 hr	950	1,335–1,630 *a*
Limiting size, in	3/4	1/4
Product: Limiting mesh	35	35
% <200-m	63	53
Tons <200-m. produced per 24 hr	470	721 *b*
Power consumption:		
Rod mill, 7×15-ft	225	.....
Two @ 6×16-ft. pebble mills and 2 @ 6×29-ft. Dorr classifiers	254	.....
Ball mill, 7×15-ft., and 12×27-ft. Dorr FX classifiers	.....	384–472 *a*
Sand pump elevating ball-mill discharge	.....	23–28
Totals	479	407–500
Hp.-hr. per ton of new feed	12.1	7.32–7.36
Hp.-hr. per ton <200-m. produced	24.5	15.1–11.0
Costs, cents per ton:		
Rod milling, 1931–1934	7.3	....
Pebble milling	6.1	.....
Classification	1.0	.....
Ball milling and classification, 1936	.....	11.1
Crushing	6.0	6.5
Total	20.4	17.6

a The first figure is with new liners; the second with worn.
b On basis of 1,500 t.p.d. of new feed.

(*1938 J 90*) a 9×16-ft. mill, arranged for feeding both ends and discharging at the center through peripheral ports, grinds dry from 3/4-in. to 10-m., replacing three large crushing rolls. At CHINO (*IC 6894*) replacement of 42-in. rolls by 7×10-ft. rod mills decreased maintenance and power costs materially.

The modern consensus is that for the softer average and soft ores the rod mill is definitely superior from the standpoint of simplicity to a closed circuit comprising rolls or short-head cone, screens, and elevating means, for reducing from 3/4- or 1- or even, possibly, 1 1/2-in. limiting size to 6- or 10-m. It may also show a lower cost per ton of ore so reduced. This is particularly true with wet and sticky ores. It also simplifies dust collection in the crushing plant. For harder ores it is probable that rolls or cones are cheaper for the reduction range down to 1/4-in., particularly if multistage grinding with a rod mill in the primary position is to follow, since the rod mill can handle tramp oversize from such machines operating open circuit. On the other hand, there is danger with such a circuit that the rod-mill circuit, if closed, or the secondary circuit, with the primary open, will load up with coarse sand, if the crushing runs consistently coarse. For grinding to 48-m. or finer the preponderant weight of use is in favor of ball mills in the final position, whether the ore is hard or soft. For two-stage work on hard ores the consensus seems to favor ball mills in the primary position also.

McClelland (*Bul 342 CIMM 407*) argues against use of primary rod mills on the score that although they can be fed with 1-in. material, it is usually possible to get to a nominal 3/8-in. feed with 2-stage open-circuit crushing and that it is possible to do excellent work, as to both first cost and operation, ball-milling in one stage from 1 1/2-in. to 65 *mog* (citing the GUNNAR operation, Table 30). He also points out as a disadvantage of rod-milling in the crushing size zone that storage thereafter is impossible and that the difficulties of balancing in a multistage circuit therefore arise.

Ball mills are tumbling mills in which the grinding media are metal spheres, usually made of an iron alloy. Other shapes such as cones, cubes, octahedra, short cylinders, and irregular pieces of scrap metal have been tried, but today the spherical shape predominates almost completely. Shells are essentially cylindrical (Fig. 34, item *A*), cylindrical with conical heads (item *B*), or conical (item *C*). Rotation is about the axis of generation,

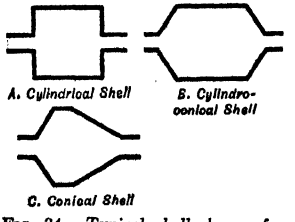

FIG. 34. Typical shell shapes for ball mills.

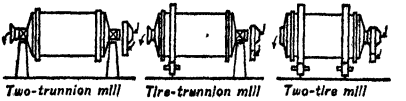

FIG. 35. Methods of support of ball mills.

which is set horizontally. The shell may be fitted with a transverse perforated diaphragm near the discharge end, in which case, it is designated a GRATE MILL (Art. 10); otherwise it is an OVERFLOW MILL (Fig. 34). Support may be by means of trunnion bearings at both

ends; by trunnion at the feed end and tire and rollers at the discharge end; or by tire and rollers at both ends (Fig. 35). Two-trunnion support is usual for overflow mills and is often used for grate mills. Tire-and-roller support permits elimination of the discharge head in grate mills, thus allowing discharging pulp to flow from the periphery of the shell unimpeded, affording superior facilities for observation, and more ready access to the shell interior. Such mills are called OPEN-END MILLS. A mill with trunnion discharge is called a HIGH-DISCHARGE MILL in contradistinction to LOW-DISCHARGE MILLS, which have grates with openings extending nearly all or all the way to the shell liners. Cylindrical mills with trunnion feed and peripheral discharge through a screen are called SCREEN-TYPE or Krupp ball mills; they are substantially obsolete in wet milling.

8. OVERFLOW BALL MILLS

Overflow mill is essentially like the two-trunnion rod mill (Fig. 25) except that, in general, the ratio of length to diameter does not exceed 1 1/2 : 1. Principal structural elements are discussed in Art. 4. Usual sizes and operating data presented by the manufacturers are summarized in Table 29 and Fig. 36. Diameters in ordinary use are 5 to 10-ft.

Table 29 contains data both as to overflow- and grate-type cylindrical mills. The lighter mills and smaller ball loads at any rated size usually refer to overflow mills. VOLUME OF LOAD was calculated in the table on the basis of 300 lb. per cu. ft. of struck volume, as indicated by Gow (*134 J 203*). Most manufacturers calculate on the basis of lower weights per cu. ft. whence the intended mill volumes are greater than the tabular values. Usual practice is to carry loads as large as the mill will hold, which is between 40 and 45% of mill volume for mills with normal-sized trunnions, decreasing the load somewhat if less than full capacity is desired. The SPEEDS recommended comprise the usual range (see Table 30), except that speeds above 80% of critical are unusual and probably mark a difference between manufacturer and author as to the liner thickness assumed.

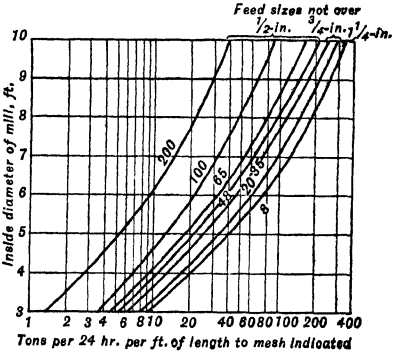

For grate-type mills, add 10%; for overflow mills, deduct 10%; for very hard, tough rock, deduct 50%; for soft rock add 25 to 50%.

FIG. 36. Average capacities of ball mills on average ores; wet closed-circuit operation (*after seven manufacturers*).

Performances of overflow ball mills are given in Table 30.

Size of feed at 24 mills reporting ranged from <2-in. to 28-m. with half feeding at 3-m. and smaller.

Size of product ranged from 3 to 65 *mog* with the mean at 28 to 35 *mog*. The predominant discharge size in primary grinding was 10 *mog* and in secondary 48 *mog*, reflecting the fact that the majority of mills reported were grinding in either one or two stages for flotation feed.

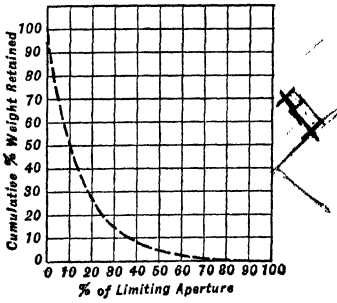

FIG. 37. Characteristic product of overflow ball mill, open-circuit grinding to 8 or 10 *mog*.

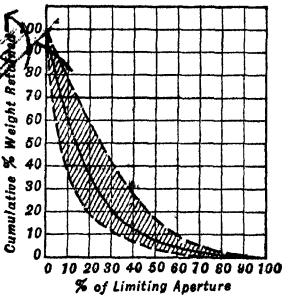

FIG. 38. Characteristic product of overflow ball mill (closed-circuit grinding).

Distribution curves are shown in Figs. 37 and 38. The solid curve in Fig. 38 is the mean. In closed-circuit work, if sizing stops at 200-m., short-range products for average

Table 29. Ball-mill data from manufacturers' catalogues

(See Fig. 36 for capacities)

Rated size of mill, diam. × length, ft.	Inside average size new liners, diam. × length, ft.	Ball charge		Liner, weight, lb.	Weight, mill and liner, lb.	Speed recommended		Power	
		Recommended, lb.	Approx. % of mill volume			R.p.m.	% of critical	Estimated consumed	Motor recommended
2 1/2×2	2.16×1.84	1,250	62	.....	2,300	37	71	4-5	7.5
2 1/2×2 1/2	2.16×2.34	1,750	68	.....	2,700	37	71	.....	7.5
2 1/2×3	2.5×3	1,900	43	.....	4,300	38	78	5-7	7.5
2 1/2×4 1/2	2 5×4.5	2,960	45	.....	4,800	38	78	8-10	10
3×2	2.67×1.84	1,200-1,740	39-56	1,450	7,200-8,100	35	74	5-7	7.5-10
3×2	3×2	1,600	35	.....	6,650	.....	.....	7 1/2	10
3×2 1/2	2.67×2.34	1,050	27	.....	5,500	34	72	3 1/2-4 1/2	7 1/2
3×3	2.67×2.84	1,500-1,850	32-39	2,000	6,200-9,500	32-38	68-83	5-11	7 1/2-15
3×3	3×3	2,500	39	.....	7,300	.....	.....	10	15
3×4	2.67×3.84	2,000-3,480	31-54	2,450	6,900-10,500	32-35	68-74	7-15	10-20
3×4	3×4	3,400	40	.....	7,950	.....	.....	12	15
3×5	2.67×4.84	2,500-3,700	31-45	2,900	11,500	32-44	68-93	18-23	20-25
3×5	3×5	4,300	40	.....	8,700	.....	.....	14	15
3×6	3×6	5,200	41	.....	9,450	.....	.....	17 1/2	20
3×8	3×8	7,000	41	.....	10,850	.....	.....	22	25
3×9	3×9	8,200	43	.....	11,600	.....	.....	24	25
3 1/2×3	3.16×2.84	3,360	50	.....	9,000	34	79	11-13	15
3 1/2×5	3.16×4.84	5,600	49	.....	12,500	34	79	19-22	25
4×3	3.67×2.84	2,500-4,280	28-48	3,800	11,800-15,200	29-32	72-80	15-19	20-25
4×3	4×3	4,300-5,460	38-48	.....	13,700-16,000	30	79	17-24	20-25
4×4	3.67×3.84	3,300-5,600	27-46	4,400	13,700-16,750	39-37 1/2	72-94	18-34	25-40
4×4	4×4	4,750-5,900	32-39	.....	15,100	30	79	22	25-40
4×5	3.67×4.84	4,200-7,140	28-47	5,000	15,600-18,250	29-32	72-80	22-30	30-40
4×5	4×5	5,940-9,100	32-48	.....	16,750-19,800	30	79	28-40	30-50
4×6	3.5×5.75	5,000-5,600	30-34	5,600	16,900-19,500	29-32	71-78	37	40-50
4×6	4×6	7,130-10,500	32-46	.....	18,600	30-35	79-90	35-64	40-75
4×8	4×8	12,300	40	.....	21,650	.....	.....	42	50
4×10	4×10	15,600	41	.....	25,750	.....	.....	49	50
5×3	5×3	6,700	38	.....	17,250	.....	.....	34	40
5×4	4.67×3.84	5,000-9,000	25-46	7,700	19,000-26,500	26-29	72-81	32-41	40-50
5×4	5×4	9,200-10,500	39-45	.....	20,450-28,000	27	80	41-50	50
5×5	4.67×4.84	6,300-11,000	30-44	9,000	23,000-28,500	26-30 1/2	72-85	38-68	50-75
5×5	5×5	11,700	40	.....	23,700	.....	.....	48	50
5×6	4.67×5.84	7,500-13,500	25-45	10,200	25,900-31,000	26-29	72-81	45-61	60-75
5×6	5×6	14,300-15,700	40-44	.....	28,100-32,000	27	79	57-75	60-75
5×7	4.67×6.84	10,600-11,000	30-32	11,500	27,400	28	78	.....	100
5×8	4.67×7.84	12,100-12,500	30-31	12,800	29,000	28	78	.....	100
5×8	5×8	19,300-22,000	41-47	.....	32,400	28	82	73-135	75-150
5×10	5×10	24,300	42	*a*	37,350	.....	.....	88	100
5×12	5×12	29,300	42	.....	42,500	.....	.....	103	125

6×4	5.67×3.84	8,000–9,000	28–31	11,000	38,900–42,700	24–26	75–81	67	75
6×4 1/2	5.67×4.33	16,300	50	.....	46,000	25	78	76–86	100
6×4 1/2	6×4 1/2	17,750	46	.....	51,000	24	75	85–95	100
6×5	5.67×4.84	10,000–11,000	27–30	12,900	41,500–44,375	24–26	75–81	84	100
6×6	5.67×5.84	12,000–21,800	27–49	14,800	43,100–52,000	24–26 1/2	75–83	101–120	125
6×6	6×6	23,000–23,700	45–46	.....	56,000	24–25	75–78	115–140	125–150
6×7	5.67×6.84	14,000–15,000	27–29	16,700	45,700–50,735	24–26	75–81	117	125
6×8	5.67×7.84	16,000–26,000	27–44	18,600	48,300–57,735	24–26 1/2	75–83	134–160	150–175
6×8	5.67×7.75	30,500	50	.....	.....	25	78	187	200
6×9	5.67×8.75	18,000	27	20,500	50,900	25	78	.....	200
6×10	5.67×9.75	20,000	27	22,400 *b*	53,500	25	78	.....	200
7×5	6.5×4.75	17,800–18,000	38	18,000	69,000	22	73	.....	125–150
7×5	7×5	20,000–26,200	35–46	.....	74,000–75,500	22–24	76–83	135–167	150–175
7×6	6.5×5.75	21,000–26,500	37–46	23,000	72,000	22–23 1/2	73–78	162	150–175
7×6	7×6	24,000	35	.....	80,000	22–24	76–83	200	200
7×7	6.5×6.75	25,000–28,000	37–42	28,000	75,000	22	73	.....	200
7×7	7×7	36,000	39	.....	84,000	22 1/2	77	190–210	200
7×8	6.5×7.75	32,000–35,500	28–30	.....	.....	22–23 1/2	73–78	216	200–225
7×10	6.5×9.75	44,000	38	.....	.....	23 1/2	78	270	275
8×5	7.5×4.75	25,000	40	.....	.....	20	71	.....	150
8×6	7.5×5.75	30,000–35,000	40–46	32,000	94,100	20–21 1/2	71–77	214	200–250
8×6	8×6	40,400	45	.....	103,000	21	78	200–245	250
8×7	7.5×6.75	35,000	39	38,600	97,800	20	71	.....	250
8×7	8×7	36,000	34	.....	116,000	18	67	300	300
8×8	7.5×7.75	40,000–47,000	39–46	.....	.....	20–21 1/2	71–77	290	250–300
8×8	8×8	53,800	45	.....	114,000	21	78	290–325	350
8×10	7.5×9.75	58,000	45	.....	.....	21 1/2	77	356	375
9×7	8.5×6.75	46,000–52,000	39–44	50,000	120,000	19–19 1/2	72–74	320	325–350
9×7	9×7	59,600	45	.....	140,000	20	78	345–380	400
9×8	8.5×7.75	60,000	45	.....	.....	19 1/2	74	370	375
9×8	9×8	66,500	44	.....	.....	18 1/2	72	400	400
9×9	8.5×8.75	68,000	45	.....	.....	19 1/2	74	420	425
9×9	9×9	76,400	44	.....	155,000	20	78	450–490	500
9×10	9×10	83,000	44	.....	.....	18 1/2	72	500	500
9×12	8.5×11.75	90,000	45	.....	.....	19 1/2	74	555	600
9×12	9×12	99,500	44	.....	.....	18 1/2	72	600	600
10×7	9.5×6.5	56,000	37	65,000	156,000	17	68	.....	500
10×8	10×8	82,000	44	.....	.....	17	70	500	500
10×9	10×9	101,600	48	.....	214,000	18	74	630–675	700
10×10	10×10	102,000–112,900	43–48	.....	220,000	17–18	70–74	625–750	650–800
10×12	10×12	123,000	44	.....	.....	17	70	750	750

a At LORETO (*112 A 727*) cast-iron shell liner weighed 16,000 lb. and end liners 1,800 lb.
b At LORETO (*ibid.*) cast-iron shell liner weighed 22,000 lb. and end liners 3,000 lb.

Table 30. Performance of overflow ball mills (wet)

	Midvale *k* (U.S.S. R. & M.)	Magma *n*	Bonne Terre	Leadwood	Cons. Ariz. Sm. Co.	Britannia	Tennessee *q*
SPECIFICATIONS OF MILL							
Size: Diam. × length, ft. *a*	5×10	5×10	6×4	6×4 1/2	6×6	6×9	6×12
Speed: R.p.m.	27	26	22	26	23.5	19.7	22
% of critical *b*	75	72	68	81	73	61	68
Balls: Weight, tons	7.5 *m*	9	6	8.8	6	13	.....
% of mill volume	30	36	43	46	28	40	.....
Diam. of renewals, in.	2. 2 1/2	2	4.5	2	5	3 1/4	2
Material	*CCI*	*Whl*	*FS*	*FS*	*FS*	*FS*	.....
Liner: Type	Wave	Lifter *o*	Shiplap	Smooth	.....	Rail	Shiplap
Material	*Mn*	*Whl*	*Mn*	*Cr-NI*	*p*	*x*	*Cr-Mo*
Power: Installed, hp.	100	.....	100	100	125	75	200
OPERATING DATA							
Feed rate: Tons new feed per hr.	*l*	8.3	18.8	50	12	13.5	25 *r*
Tons new feed per hr. per ton of balls		0.92	3.1	5.7	2.0	1.04	.....
Sizings: Test reference *c*	*22*	4	*7*	*8*	*10*	*w*	*s*
Feed: Limiting, in.	0.033	0.065	3/8	0.093	3/8	.....	.....
Product: *Mog.*	35	35	8	10	4	28	.....
Reduction ratios: Limiting sizes	2	4	4	1.4	2	.....	.....
80% sizes *g*	6	5	6	1.4	11	.....	.....
Pulp, % solids	75–80	70	50	70	.....	70	69
Circulating-load ratio *h*	*l*	2.0	*OC*	1.0	*OC*	6.0	1.5
Power consumed: Hp.		63 *e*	68	75	74	95	170
Hp. per ton of balls		7	11.3	8.6	12.3	7.6	.....
Steel consumption, lb. per ton of new feed: Balls	1.1	1.75	0.17	0.10	1.5	2.4–2.8	1.25
Liners (or life, days)	0.21	0.064	.....	0.012	*p*	0.20	0.028
PERFORMANCE DATA							
Tons per hp-hr.: New feed		0.13	0.28	0.67	0.16	0.14	0.15
<65-m. produced		0.068	0.11	0.13	0.062	0.062	0.018
<200-m. produced		0.043	0.034	0.078	0.040	0.035	0.016

	Loreto *t*	New Cornelia	Gunnar	Aldermac	Butte and Superior	Ray	Utah, Magna
SPECIFICATIONS OF MILL							
Size: Diam. × length, ft. *a*	6×12	6 1/2×15	7×6	7×7	7×10	7×10	7×10
Speed: R.p.m.	23.1	23.2	24.8	22	17	16 2/3	20.5
% of critical *b*	72	72	83	74	57	56	69
Balls: Weight, tons	.....	29	13	.....	12	17	18–21
% of mill volume	.....	42	44	.....	24	34	41
Diam. of renewals, in.	5	2 1/2	5	3	3	2	2
Material	*TFS*	*Whl*	*FS*	*CI*	*Md*	*CSS*	*CSS*
Liner: Type	.....	Rail *v*	Wave	Shiplap	Lifter	Rail	Rail
Material	*Mn u*	*v*	*Mn*	*Mn*	*Whl*	.....	.....
Power: Installed, hp.	.....	300	150	225	150	150	200
OPERATING DATA							
Feed rate: Tons new feed per hr.	18.8	26	6.7	12.5	25	20.8	51.2
Tons new feed per hr. per ton of balls	.....	0.90	0.52	.....	2.1	1.2	2.6
Sizings: Test reference *c*	*9*	*11*	*y*	*12*	*3*	*23*	*18*
Feed: Limiting, in.	1 1/4	3/8	2.0	3/4	0.093	0.093	0.093
Product: *Mog.*	3	65	65	48	10	48	10
Reduction ratios: Limiting sizes	5	1.4	240	62	1.4	8	1.4
80% sizes *g*	13	39	.....	57	2.6	7	1.5
Pulp, % solids	.....	70	80	86	63	80	68
Circulating-load ratio *h*	*CC*	3.2	7.0	5.8	*CC*	2.4	*CC*
Power consumed: Hp.	160	257	136 *e*	220	135	142	150
Hp. per ton of balls	.....	8.9	10.5	.....	11.2	8.4	7.5±
Steel consumption, lb. per ton of new feed: Balls	1.42	1.94	2.37	3.1	2.05	1.0	1.27 *z*
Liners (or life, days)	(300)	0.16	.....	.....	.....	0.045	0.051 *z*
PERFORMANCE DATA							
Tons per hp-hr.: New feed	0.12	0.11	0.05	0.06	0.19	0.15	0.34
<65-m. produced	0.037	0.086	.....	0.05	0.085	0.11	0.092
<200-m. produced	0.024	0.054	0.04	0.029	0.056	0.079	0.058

a Nominal.
b With allowance for shell liner.
c Numbers refer to columns in Table 30*a*.
e Estimated.
g Sec. 4, Art. 2.
h Art. 12.
i Approximately.
k IC 6492.
l New feed to classifier, sand to mill, tons unknown, total classifier sand rate = 20.8 t.p.h.
m Light load. *n Q* and *IC 6319.* *o Mn.*

Table 30. Performance of overflow ball mills (wet)—*Continued*

	Utah, Magna	Utah, Arthur	Utah, Arthur	Chino *ab*	Copper Range	Copper Range	Copper Range
SPECIFICATIONS OF MILL							
Size: Diam. × length, ft. *a*	7×10	7×10	7×10	7×10	8×31/2 *ad*	8×41/2 *ad*	8×6 *ad*
Speed: R.p.m.	19.7	20	20	19.9	24	24	24
% of critical *b*	66	67	67	66	86	86	86
Balls: Weight, tons	18–21	18–21	18–21	18	13	16	22
% of mill volume	41	41	41	36	45 *l*	45 *l*	45 *l*
Diam. of renewals, in.	2	2	2	2	3	3	5
Material	*CSS*	*CSS*	*CSS*	*CI*	*FS*	*FS*	*FS*
Liner: Type	Rail	Rail	Rail	Rail *ac*			
Material					*Whl*	*Whl*	*Whl*
Power: Installed, hp	150	200	200	175	100	100	200–300
OPERATING DATA							
Feed rate: Tons new feed per hr.	16.3	67	20.2	16.7	16.7	14.1	15.8
Tons new feed per hr. per ton of balls	0.84	3.4	1.04	0.93	1.3	0.88	0.72
Sizings: Test reference *c*	*14*	*15*	*aa*	*24*	*16*	*17*	
Feed: Limiting, in.	0.065	0.18		0.093	0.046	3/8	
Product: *Mog*	48	10	48	48	28	35	
Reduction ratios: Limiting sizes	5	3		8	2	23	
80% sizes *g*	4.8	2.5		6.1	1.4	15.4	
Pulp, % solids	68	75	69	70	80	70	70
Circulating-load ratio *h*	2.7	*CC*	1.1	*CC*	3.0	3.5	*CC*
Power consumed: Hp	150	150	150	162	115 *e*	150 *e*	200 *e*
Hp. per ton of balls	7.5±	7.5±	7.5±	9.0	7.0	9.4	9.1
Steel consumption, lb. per ton of new feed: Balls	1.27 *z*	1.52 *z*	1.52 *z*	1.46	0.22	0.92	
Liners (or life, days)	0.051 *z*	0.092 *z*	0.092 *z*	(672)		0.14	0.145
PERFORMANCE DATA							
Tons per hp-hr.: New feed	0.11	0.45	0.13	0.10	0.15	0.09	0.08
<65-m. produced	0.078	0.13		0.079	0.063	0.051	
<200-m. produced	0.063	0.075		0.052	0.028	0.025	

	Butte and Superior	Aldermac	Aldermac	United Verde *ag*	United Verde *ag*	Pamour Porcupine *ah*	Miami *i*
SPECIFICATIONS OF MILL							
Size: Diam. × length, ft. *a*	8×6	8×7	8×7	8×12	8×12	9×10	10 1/2×8
Speed: R.p.m.	20	21	21	18	16	18.1	12.8
% of critical *b*	71	75	75	64	57	69	53
Balls: Weight, tons	13			33	33		32.5
% of mill volume	36			43	43		38
Diam. of renewals, in.	5	3	3	3 1/4	2 1/4	2 1/2, 3	1 1/2
Material	*Cr*	*CI*	*CI*	*CI*	*CI*	*CI*	*CI*
Liner: Type	Ring *ae*	Wave	Wave	Wave *af*	Wave *af*	Wave	*ah*
Material	*Whl*	*Mn*	*Mn*	*CI*	*CI*	*Mn*	*CI*
Power: Installed, hp	200	200	200	400	350	350	300
OPERATING DATA							
Feed rate: Tons new feed per hr.	12.5	18.7	18.7	16.7	46	31.2	122
Tons new feed per hr. per ton of balls	0.96			0.51	1.4		3.8
Sizings: Test reference *c*	*5*	*18*	*19*	*25*	*26*	*20*	*21*
Feed: Limiting, in.	1 1/2	1 1/2	3/4	3/8	0.023	1 1/2	0.046
Product: *Mog*	10	35	48	28	65	20	20
Reduction ratios: Limiting sizes	23	94	62	16	3	91	1.4
80% sizes *g*	30	164	60	25	3	130	1.3
Pulp, % solids	70	86	86	81	78	84	65
Circulating-load ratio *h*	2.0	3.8	4.3	3.4	1.5	3.1	0.4
Power consumed: Hp	246	200	200	400 *e*	390 *e*	360	290
Hp. per ton of balls	18.9			12.1	11.8		9.0
Steel consumption, lb. per ton of new feed: Balls	1.03	3.1	3.1	2	2	1.9	0.69
Liners (or life, days)		(360)		0.25	0.25	(2 yr.)	0.05
PERFORMANCE DATA							
Tons per hp-hr.: New feed	0.05	0.09	0.09	0.04	0.12	0.09	0.42
<65-m. produced	0.020	0.072	0.069	0.027		0.08	0.072
<200-m. produced	0.018	0.047	0.046	0.018		0.047	0.043

p White iron, 35 da., 1.34 lb. per ton; semisteel, 59 da., 0.81 lb.; chrome steel, 81 da., 0.48 lb.; manganese steel, 134 da., 0.50 lb.

q See also Table 26.

r To classifier.

s Feed 32% >65-m., 11% <200-m.; mill discharge: 20% >65-m., 22% <200-m.

t 112 A 727.

[*Notes continued on page 60.*]

Table 30*a*. Screen analyses for overflow ball mills, Table 30

Size	Mesh					3	4	6	8	10	14	20	28	35	48	65	100	150	200	<200
	Inches	1	3/4	1/2	3/8	0.263	0.185	0.131	0.093	0.065	0.046	0.033	0.023	0.016	0.012	0.0082	0.0058	0.0041	0.0029	.....
Reference No.	Material *a*	Percentage weight retained, cumulative																		
2	CF											0.25	.....	.....	4.55	32.0	46.8	.....	89.1	10.9
	NF															9.4	19.4	.....	64.1	35.9
	CO																0.2	.....	13.2	86.8
3	NF									7.9	17.3	.....	56.7	71.8	.....	95.6	98.4	99.0	99.4	0.6
	MP									0.4	0.5	.....	9.4	21.6	.....	50.3	62.5	69.5	75.5	24.5
4	NF										3.0	.....	21.5	33.7	45.2	55.2	66.6	72.4	75.6	24.4
	CF										1.5	.....	11.8	22.3	37.8	58.3	83.8	93.3	94.7	5.3
	MP												1.2	4.9	14.2	33.2	58.9	72.5	78.9	21.1
	CO													0.5	1.0	2.5	13.5	28.0	42.6	57.4
5	NF			35.5	59.7	76.6	85.6	91.2	95.3	98.1	99.1	.....	.....	.....	.....	.....	.....	.....	.....	*b* 0.9
	CO									0.7	4.5	9.3	14.4	23.3	31.4	40.9	50.6	59.1	63.3	36.7
7	CF					4.9	23.4	33.8	57.0	78.5	94.0	98.8	99.7	.....	.....	.....	.....	.....	.....	*b* 0.3
	MP								1.4	5.1	11.2	19.3	31.3	39.5	50.1	59.2	75.4	85.9	87.8	12.2
8	CF									5.0	22.1	43.9	64.8	80.5	89.7	96.4	98.6	99.3	99.6	0.4
	MP									1.6	9.0	21.8	38.6	54.3	66.9	76.4	82.1	85.9	87.9	12.1
9	NF	7.4	30.9	54.9	70.3	78.0	84.2	87.6	90.0	.....	92.9	.....	94.9	95.2	95.9	96.4	97.0	97.6	97.9	2.1
	CO					0.4	1.8	4.2	8.3	.....	27.7	.....	47.3	53.8	60.6	65.0	70.5	75.2	78.2	21.8
10	CF				1.5	.....	65.0	.....	77.8	.....	83.6	.....	.....	88.0	.....	92.4	.....	.....	.....	*b* 7.6
	MP						1.3	.....	4.1	.....	11.7	.....	.....	26.1	.....	53.3	62.7	67.2	74.6	25.4
11	NF						26.5	42.9	51.2	63.1	69.2	73.6	78.0	81.2	83.9	86.2	88.5	90.5	91.8	8.2
	CF						10.0	15.0	19.5	27.8	.....	.....	.....	65.8	.....	85.4	.....	.....	93.0	7.0
	MP						6.0	9.0	11.2	18.4	24.8	32.0	42.4	53.6	64.6	73.6	79.8	83.6	85.6	14.4
	CO														1.7	8.0	20.3	32.0	43.0	57.0
12	NF					23.0	.....	.....	.....	73.2	.....	.....	.....	.....	86.8	88.9	90.7	92.8	94.6	5.4
	MP														17.5	30.4	44.7	62.9	75.2	24.8
	CO														2.2	7.5	16.5	28.3	45.8	54.2
13	NF									2.1	18.7	40.4	59.1	72.3	80.5	86.1	90.0	92.4	73.8	6.2
	MP									1.1	6.3	15.3	26.3	38.3	49.1	58.8	68.3	73.1	76.9	23.1
14	NF										1.0	5.0	14.1	33.9	54.8	72.8	84.9	90.2	93.4	6.6
	CF											1.7	5.0	14.3	28.7	51.3	74.8	83.5	90.2	9.8
	MP											0.2	0.8	4.4	12.5	30.3	55.2	64.9	74.4	25.6
	CO														0.2	2.2	11.2	21.9	35.9	64.1

15	NF									17.4	31.8	44.3	57.1	68.0	76.9	84.1	88.9	92.0	93.7	6.3
	MP									2.6	6.6	12.3	21.5	33.1	44.3	55.7	64.3	71.5	77.0	23.0
16	NF												0.5	6.2	33.2	69.8	90.7	97.7	99.	0.8
	CF												0.4	4.4	26.2	59.4	83.2	92.9	96.1	3.9
	MP												0.6	4.4	22.5	51.0	73.1	83.9	87.7	12.3
	CO												0.2	1.2	8.3	27.9	54.7	72.2	80.5	19.5
17	NF							26.0	45.8	56.5	63.5	69.3	74.3	80.6	85.8	89.5	92.8	95.4	96.8	3.2
	CF							6.5	12.1	16.6	21.2	28.8	39.2	59.7	77.4	86.1	91.1	94.1	95.7	4.3
	MP							0.4	2.0	4.7	8.5	14.3	22.8	38.5	54.2	64.5	72.7	78.3	81.6	18.4
	CO											0.1	0.2	1.9	13.5	32.4	49.7	61.5	68.5	31.5
18	NF					40.1	.....	.....	.....	78.1	.....	.....	.....	.....	88.0	90.0	91.3	93.3	95.0	5.0
	CF					8.4	.....	.....	.....	16.4	.....	.....	.....	.....	34.3	43.1	53.8	70.1	81.7	18.3
	MP														19.7	29.4	41.0	56.8	70.6	29.4
	CO														4.9	10.5	17.6	30.3	42.5	57.5
19	NF					27.0	.....	.....	.....	64.8	.....	.....	.....	.....	81.4	84.5	87.0	90.1	92.6	7.4
	CF					5.1	.....	.....	.....	12.3	.....	.....	.....	.....	32.0	43.2	55.6	73.0	83.2	16.8
	MP														21.9	33.2	45.8	63.2	73.6	26.4
	CO														2.9	7.8	14.9	28.7	41.5	58.5
20	NF						38.1	.....	59.7	.....	67.9	71.5	74.2	78.1	84.5	89.1	91.9	.....	96.4	3.6
	CF						26.6	.....	39.0	.....	46.3	50.0	55.0	62.0	73.5	82.5	90.0	.....	94.2	5.8
	MP						15.3	.....	22.7	.....	28.2	30.7	34.9	41.0	50.8	61.4	71.0	.....	80.5	19.5
	CO																22.3	.....	43.7	56.3
21	NF										1.4	6.3	16.4	37.2	62.4	76.0	85.3	89.6	91.9	8.1
	MP											2.9	8.7	22.8	43.2	58.0	70.3	76.6	81.2	18.8
22	CS											0.2	0.9	4.6	13.2	46.4	67.2	76.8	88.8	11.2
	MP											0.2	0.8	1.5	4.7	14.7	45.2	56.0	74.3	25.7
	CO													0.4	1.7	5.4	14.5	18.7	39.9	60.1
23	NF									2.0	11.5	23.6	38.7	54.8	66.0	76.5	83.2	.....	90.5	9.5
	MP										1.3	2.9	7.1	14.7	24.9	.....	57.1	.....	75.5	24.5
	CS																			
	CO									0.7	1.8	4.0	9.8	20.3	32.1	51.2	72.8	.....	90.6	9.4
															1.0	3.2	14.5	.....	37.5	62.5
24	NF								0.4	1.2	6.6	17.4	34.4	54.6	70.2	82.0	90.0	93.6	95.2	4.8
	CO															2.9	14.8	27.7	42.8	57.2
25	NF					3.0	18.2	33.1	44.8	54.8	63.0	68.8	74.2	77.8	80.5	83.0	85.2	87.3	88.7	11.3
	MP					0.5	2.3	3.8	5.8	8.1	12.1	16.8	24.8	36.5	49.3	61.1	70.8	77.5	81.3	18.7
	CS					0.3	2.1	4.1	7.0	10.8	16.0	22.7	33.5	48.1	62.6	75.7	84.6	90.1	92.1	7.9
	CO												0.2	2.1	6.5	14.7	27.3	37.0	44.0	56.0
26	CS												0.7	5.2	17.0	39.0	68.6	85.5	94.9	5.1
	MP												0.8	3.6	7.2	15.8	38.5	57.0	69.9	30.1
	CO															0.8	6.4	16.4	26.2	73.8

a ***CF,*** composite feed; ***CO,*** classifier overflow; ***CS,*** classifier sands; ***MP,*** mill product; ***NF,*** new feed.

b Through last screen.

u Shell. End, *CI*, weight 3,000 lb., life 120 da.
v Cemented rail, Art. 5. 60–70-lb. rail in 4-in. lengths, spaces partially filled with worn-rod sections.
w Feed: 65–70% >65-m., 15–20% <200-m.; classifier overflow, 22–24% >65-m., 40–45% <200-m.
x Quenched.
y Feed: <2-in.; mill discharge, 13% >20-m., 14% <200-m.; classifier overflow, 80% <200-m.
z Total primary and secondary. Rail liners cost $280 (1929) and last 2 1/2 yr. *vs.* white iron at $1,100 and 1-yr. life.
aa Feed: 73% >100-m.; mill discharge: 65% >100-m., 18% <200-m.; classifier overflow, 55% <200-m.
ab *IC 6394.*
ac 3 1/2-in. lengths; lifter rows of 6-in. lengths, 10 per circle, white-iron end liners, life 123 da.
ad Length is that of cylindrical barrel; 60° conical ends.
ae Shiplap surface conformat.
af Average thickness 3 in.; 20 waves per circle; weight, 25 tons.
ag *IC 6343.*
ah Williamson mill.

ores will lie between the full curve and the upper dotted curve, and long-range products below the full curve. For the same size range, the curves for hard ores lie above the full line and those for soft ores below. The 80% size ranges from 20 to 45% of limiting size. Fifty per cent. of the product from an average ore is less than 15% of limiting size, in general, and less than 10% on a soft long-range product. Fig. 37 shows an average 8- or 10-m. open-circuit product, based on three ores slightly on the soft side of average hardness.

Reduction ratios. Nominal limiting ratios range from 1.4 to 240 with the mean about 4. The 80% ratio ranges from 1.4 to 164 with the mean about 6. These mean ratios correspond to prevailing practice of reduction of 3/8- or 1/2-in. to 8 or 10 *mog* in the primary of two-stage grinding, and 10-m. to 48 or 65 *mog* in secondary work. The high ratios denote, of course, the one-step reduction of >1-in. material to flotation feed; the frequency of this practice in the cases reported is about 8%.

Capacity. For discussion of controlling factors see Art. 14. Averages of the performances in Table 30 are graphed in Fig. 39, with ranges indicated by verticals, and the numbers of cases indicated by the numerals adjacent the range lines. Low values represent hard ores or mills operating at low speeds and/or with small ball loads. The dotted line probably represents safe figures for estimate on average ores at about 40% ball load, with higher figures definitely to be expected when grinding softer ores. For estimate, apply the method

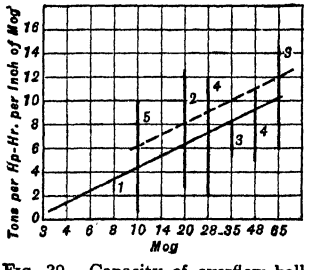

FIG. 39. Capacity of overflow ball mills.

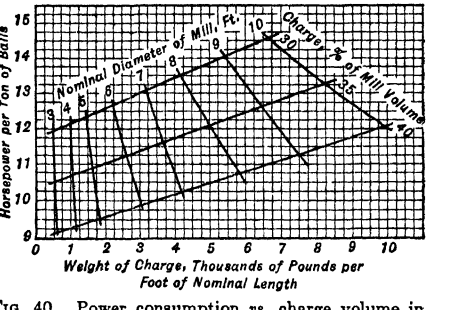

FIG. 40. Power consumption *vs.* charge volume in overflow ball mills (averaged from Tables 29 and 30; speed 70 to 75% of critical).

of p. 49 to Figs. 39 and 40. Capacity in tons per hr. per ton of balls averages about 3 for 8 to 10 *mog* and 1 for 28 to 65 *mog*, from which an average of 2 for 14 to 20 *mog* is inferable. These figures should not, theoretically, have any diagnostic value, since they should vary both with diameter of mill and size of feed as well as with speed, charge volume, and grindability. But as a matter of practical fact they are useful for average ores and mills over 5 ft. inside diameter working to reduction ratios near the mean and to *mogs* down to 65. Low reduction ratios and 9- and 10-ft. diameters tend to give capacities above the averages.

Power consumption at usual speeds and ball charges with partially worn wave-type liners may be estimated from Fig. 40, which is averaged from the performance figures in Table 30, and from the estimates of Table 29. With relatively smooth liners and speeds below 70% critical, consumption figures will be lower, although the increase in mill diameter and charge weight as a ridged liner wears smooth tends to keep power up or may even cause it to rise. The effects of feed rate and *mog* on power consumption are indicated in

Fig. 41, averaged from Table 30. The data apply to 7-ft. mills only, there being an insufficient number of cases for other sizes.

Efficiency. Tons per hp-hr., disregarding all other variables, cluster around 0.3 for 8 or 10 *mog*, about 0.25 for 14 to 28 *mog*, and 0.1 for 35 to 65 *mog*. Markedly higher figures correspond to soft ores and low reduction ratios (*e.g.*, LEADWOOD and ARTHUR, Table 30), and exceptionally low figures to high reduction ratios and/or hard ores (GUNNAR, BUTTE & SUPERIOR 8×6-ft. mill). Production of <65- and <200-m. material when grinding to different *mogs* is averaged in Fig. 42. It is doubtful whether the trough at 28 *mog* is significant; rather it would appear that the dotted lines presented a more reasonable expectation.

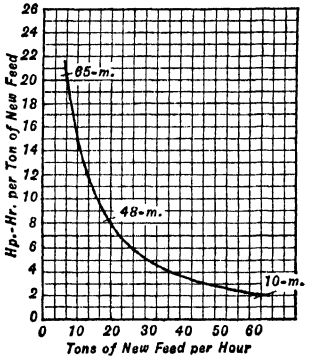

FIG. 41. Power consumption *vs.* feed rate and *mog* for 7-ft. overflow ball mills.

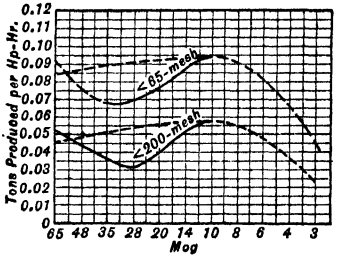

FIG. 42. Production of fine sizes in overflow ball mills.

Speed ranged from 53 to 86% of critical with mean and average both in the range of 70 to 75%. The higher speeds in general correspond to hard ores or coarse feed and *vice versa*. See also ***Speed*** in Art. 7.

Pulp density ranges from about 50 to 85% solids. Values below 65% solids are exceptional. Usual practice is around 70% solids for the finer feeds grinding to 48 or 65 *mog* and about 80% for coarse feeds and 8 or 10 mog. See Art. 16.

Attendance. See Art. 18.

Lost time should not exceed 1%. The principal cause is relining.

Costs. See Art. 20.

Use. For discussion of overflow *vs.* grate-type mills, see Art. 3.

9. CONICAL BALL MILL

The true conical mill is characterized by a shell having a short cylindrical section and a relatively acutely conical discharge-end section (see Fig. 34, item *c*, and Fig. 43). The usual form (HARDINGE) is also provided with an obtusely conical feed end. The generating elements of the conical end sections make approximately 60° and 30° angles with the mill axis. The ratio of diameter to length of cylindrical section in the typical mills is from 3 to 4.5 : 1 (see Table 31), but many so-called conical mills are built with ratios as low as 1.7 : 1, and the manufacturer lists conical-ended mills with a D/L ratio as low as 1.2.

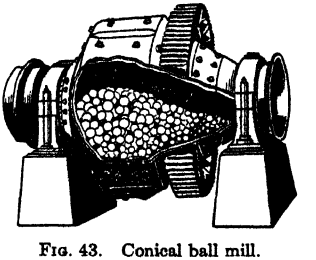

FIG. 43. Conical ball mill.

Action in a conical mill with a high D/L ratio is different from that in a cylindrical mill for two reasons. First, the critical speeds for a given r.p.m. increase as the diameter of the transverse section decreases, wherefore the percentage of critical speed and the consequent lifting effect on the load is markedly greater in the cylindrical section than along the discharge cone. This tends to heap the load in the cylindrical section. Second, at the toe in the conical section the mill shell imparts a longitudinal impulse toward the cylindrical section. This impulse is most effective on the surface material, which is to say the larger balls and any coarse particles of ore. Hence the larger balls tend to segregate to a certain extent in the cylindrical section (Art. 3), and coarse material tends to be held or returned there until it is broken. The piled-up charge exerts a greater superincumbent load than that attainable with a ball charge having the same struck-volume level in a cylindrical mill of the same diameter. These tendencies are all increased when the mill is run at cataracting speeds.

Table 31. Conical ball mills. Manufacturer's data

Size, *b* diam., ft., × length, in.	Weights, lb.		Ball charge		Speed, r.p.m. *d*	Power, hp.			Estimated capacities, tons per hr. *a*				
	Mill	Lining	Tons *c*	Tons, 50% mill volume		Motor	Consumption, est.	Per ton of balls	1 1/2-in. to 10 *mog*	3/4-in. to 48 *mog*	1/2-in. to 100 *mog*	1/4-in. to 200 *mog*	1/4-in. to 325 *mog*
2×8	1,150	.....	0.25–0.32	0.34	35.2–46	1.5–2	1.5–2	6–6.3	0.29	0.15	0.10	0.06	0.04
3×8	2,700	1,400	0.50–0.65	0.65	30.4–39.8	5–7.5	5–6	10–9.2	0.88	0.42	0.33	0.21	0.12
3×24	3,050	2,400	0.95–1.2	1.2	30.4–39.8	10	8–9	9.4–7.5	1.3	0.67	0.50	0.29	0.16
4 1/2×16	7,000	5,200	1.8–2.3	2.4	25.2–33	15–20	15–18	8.3–7.8	2.7	1.4	0.96	0.62	0.38
4 1/2×24	7,300	6,300	2.25–2.85	2.9	25.2–33	20–25	20–23	8.9–7.2	3.5	1.8	1.2	0.79	0.46
5×22	10,200	8,000	3.25–4.15	4.2	23.2–30.4	30–40	32–37	9.8–8.9	5.8	2.9	2.0	1.3	0.79
5×36	10,800	9,000	4.35–5.5	5.7	23.2–30.4	40–50	40–46	9.2–8.4	7.3	3.7	2.5	1.6	0.96
6×22	15,300	10,000	5.25–6.75	6.8	21.2–27.7	50–60	52–60	9.9–8.9	9.7	4.4	3.3	2.2	1.3
6×36	17,100	11,700	6.75–8.75	8.9	21.2–27.7	60–75	63–73	9.3–8.3	11 8	5.8	4.0	2.7	1.6
7×22	19,600	13,000	7.75–10	10.3	19.4–25.4	75–100	73–84	9.4–8.4	14	6.8	4.7	3.1	1.8
7×36	20,000	15,400	10–13	13.2	19.4–25.4	100–125	92–115	9.2–8.9	19 3	9.4	6.5	4.2	2.5
7×48	23,000	17,800	12–15.2	15.6	19.4–25.4	125	116–130	9.7–8.6	21.7	10.6	7.3	4.8	2.9
8×22	26,200	16,700	11.2–14.5	14.8	18.2–23.8	100–125	105–120	9.4–8.3	20.4	9.9	6.9	4.5	2.8
8×36	26,800	20,000	14.5–18.5	18.9	18.2–23.8	150	140–155	9.7–8.4	26.4	12.8	8.9	5.8	3.5
8×48	29,000	23,000	17–21.8	22.3	18.2–23.8	175–200	163–200	9.6–9.2	34	16.4	11.4	7.5	4.5
9×36	35,600	26,000	19.2–24.8	25.3	17.3–22.4	225–300	225–275	11.7–11.1	48	23	16	10.5	6.3
9×48	38,000	28,000	22.5–29	29.7	17.3–22.4	250–300	260–310	11.6–10.7	54	26	18	12	7.2
10×36	37,600	28,000	22.2–28.6	29.3	16.2–21.2	300–350	270–350	12.2–12.2	62	29	20	13.5	8
10×48	39,800	30,000	26.2–33.8	34.6	16.2–21.2	300–400	300–400	11.4–11.8	70	34	23	15	9
10×66	50,600	35,000	32.5–41.8	42.7	16.2–21.2	400–450	370–450	11.4–10.7	79	38	26	17	10
12×48	66,000	45,000	41.5–50.3	55.3	14.7–19.2	500–600	500–600	12.0–11.9	106	50	35	23	14
12×60	68,000	50,000	47–60.5	62.0	14.7–19.2	600–700	600–700	12.7–11.6	124	59	41	26	16
12×72	70,000	55,000	50.2–61.8	69.4	14.7–19.2	700–800	680–780	13.5–12.6	138	66	45	30	18

a On average ore.
b Standard sizes.
c Corresponding to 35 to 50% of mill volume on the basis of new liners and 300 lb. per cu. ft. struck volume of ball charge.
d Corresponding to 65 to 85% of critical on the basis of inside diameter of new liners in cylindrical section.

The finer pulp, on the other hand, forming with the water a relatively viscous pseudo-fluid, is lifted with the heaped-up ball charge in the cylindrical section into a position of accentuated elevation above the lip of the discharge trunnion. This results in a more rapid flow toward the trunnion and thus accelerates discharge of this material. It is not improbable, further, that with pulps of sufficient viscosity to cause relatively sluggish flow through the ball interstices, there is no continuous body of interstitial pulp through the cylindrical section, but rather that most of the pulp therein is in the form of coatings on the balls. This has the effect of making this portion of the mill act as a low-level cylindrical mill.

Discharge restrictions are necessary when conical mills are operated with high ball charges. Fig. 44 shows a discharge-trunnion liner *a* which can be bolted on in place of the usual discharge bell (*b*, Fig. 45). This high-level spout had the double effect of raising the pulp level in the mill and hindering ball discharge.

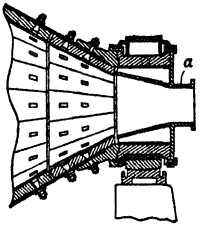

FIG. 44. High-level discharge spout.

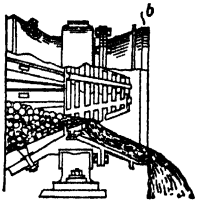

FIG. 45. Cone grate.

Grates. The cone grate (Fig. 45) is simply a conical grizzly bolted to the inner end of the discharge bell and trunnion liner *b*. Its function is to hold back balls in a high ball charge and yet permit a relatively low pulp overflow. Reverse-cone grate (Fig. 46) is essentially the reverse-cone liner perforated except that it is smaller, lighter, and is carried on a high-level spout. Fig. 47 shows a form of grate for use when it is desired to convert a conical mill to a straight low-discharge mill. The effect is to approximate a short cylindrical grate mill, in so far as action within the mill is concerned.

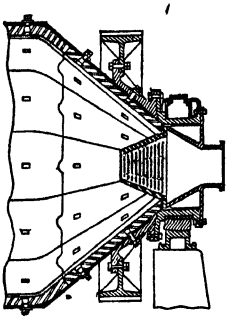

FIG. 46. Reverse cone grate.

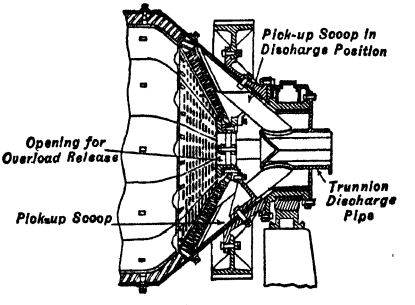

FIG. 47. Low-level grate.

Manufacturer's data are given in Table 31. The speeds recommended cover a range of 65 to 85% of critical in the cylindrical section based on new liners of average thickness. The ball loads recommended comprise the range from 35 to 50% of mill volume, likewise based on new liners.

Performances of conical ball mills are given in Table 32.

Size of feed to primary mills at 48 plants reported ranged from 8-m. to 1 3/4-in. limiting. At 26 of the plants the limiting size was in the range of 3/8- to 3/4-in. and at 14 of them in the range of 1- to 1 1/2-in. At only 6% of the plants was the feed smaller than 1/4-in. limiting size.

Size of product from primary mills in multistage grinding ranged from 3/8-in. to 35-m. limiting; at 13 out of 32 mills in such service the grind was to 8 or 10 *mog*, and at 9 to 14 or 20 *mog*. Ten out of 20 mills in one-stage service finished at 48 *mog*. Of 6 mills reported in secondary and tertiary service, two finished to each of the sizes 48, 65, and 100 *mog*. In so far as the reports constitute a representative cross-section of conical mills in ore-milling practice, their field is in one-stage or multistage grinding for flotation, or as a primary, followed by tube mills, in multistage grinding for cyanidation.

Table 32. Performance of conical ball mills

Plant	Vipond Porcupine	McIntyre Porcupine	Midvale	Miami	Bunker Hill & Sullivan *j*	Bunker Hill & Sullivan *k*	Rutile Ore *l, m*
SPECIFICATIONS OF MILL							
Size: Diam., ft. × length of cylinder, in. *a*	4 1/2×13	6×16	6×16	6×16	6×22	6×22	6×22
Speed: R.p.m.	33	29	27.5	28	26	26	25
% of critical *b*	88	88	84	85	79	79	76
Balls: Weight, tons	2	3.8	4	4	6	6	4.5
% of mill volume *ay*	47	32	33	33	44	44	33
Diam. of renewals, in.		5	2 1/2	....	3	2 1/2	4
Material *c*		*FS*	*FS*	..... .	*Md*	*Md*	*FS*
Liner: Type		*WB*	.....	.....	*WB*	*WB*	*WB*
Material *c*		*Md*	. .....	.....	*Mn*	*Mn*	*Mn*
Power: Installed, hp		50	.....	.....	.....	50	50
OPERATING DATA							
Feed rate: Tons new feed per hr.	2	6.2	5.6	14.6	7.8	2.7	7.5
Tons new feed per hr. per ton of balls	1	1.6	1.4	3.7	1.3	0.45	1.7
Sizings: Test reference *d*	*1*	*2*	*3*	*4*	*5*	*6*	*49*
Feed: Limiting size, in.	1 1/4	1 1/2	3/8	1	0.263	0.065	1
Product: *Mog*	10	10	14	3/8	14	65	4
Reduction ratios: Limiting sizes	19	23	8	2.7	6	8	5
80% sizes *h*	38	38	7	7	12	4	21
Pulp, % solids	50	65	58–65	56	51	76	40
Circulating-load ratio *i*	*OC*	*OC*	*OC*	*OC*	*OC*	8.6	0.22 *n*
Power consumed, hp.: Total	16	40	41	35	45	45 *e*	55
Per ton of balls	8	10.8	10	8.8	7.5	7.5	12.2
Steel consumption lb. per ton of new feed: Balls		0.8	0.8–0.9	.....	1.6	.....	0.4
Liners (or life, days)		0.3	.....	.....	.....	.....	0.09
PERFORMANCE DATA							
Tons per hp-hr.: New feed	0.12	0.16	0.14	0.42	0.17	0.060	0.14
<65-m. produced		0.082	0.055	0.10	0.096	0.030	0.038
<200-m. produced				0.066	.....	0.028	0.010

Plant	Gold Ore *m, o*	Black Hawk	Lead Ore *m, q*	Buffalo Ankerite *l*	Gold Ore *m, l*	A. S. & R. Co.	Gold Ore *m, l*
SPECIFICATIONS OF MILL							
Size: Diam., ft. × length of cylinder, in. *a*	6×22	6×22	6×36	7×36	7×36	7×36	7×48
Speed: R.p.m.	26	26	27	26	25	24.2	25.4
% of critical *b*	79	79	82	86	83	81	84
Balls: Weight, tons	5	.....	7.8	12	11	9	14
% of mill volume *ay*	37	.....	44	45	42	34	45
Diam. of renewals, in.	4	3	.....	5	3, 4	3	3
Material *c*	*FS*	*CI*	.....	.....	*CS*	*CI*	*CS*
Liner: Type	*WB*	Rail *p*	.....	*WB*	*WB*	.....	Wave
Material *c*	*CI*	.....	.....	*Mn*	*Mn*	.....	*Mn*
Power: Installed, hp	50	50	75	125	100	125	125
OPERATING DATA							
Feed rate: Tons new feed per hr.	3.1	4.2	6.2	17.7	6.2	19.0	8.3
Tons new feed per hr. per ton of balls	0.62	.....	0.80	1.5	0.56	2.1	0.59
Sizings: Test reference *d*	.....	7	.....	*8*	.....	*46*	*53*
Feed: Limiting size, in.	1 1/2	3/16	1 1/2	1/2	1	0.131	3/8
Product: *Mog*	65	.....	10	10	48	10	65
Reduction ratios: Limiting sizes	183	.....	23	8	84	2	46
80% sizes *h*	.....	.....	.....	12	.....	2.3	71
Pulp, % solids	75	72	60	78	80	74	80
Circulating-load ratio *i*	*DC*	*DC*	*OC*	1.0	AC	*OC*	2.2
Power consumed, hp.: Total	45	48	65	120	95	93	135
Per ton of balls	9	.....	8.3	10	8.7	10.3	9.7
Steel consumption lb. per ton of new feed: Balls	1.05	1.3	.....	0.57	2.1	3.0	2.4
Liners (or life, days)	0.8	(265)	.....	.....	.....	0.14 *bd*	0.18
PERFORMANCE DATA							
Tons per hp-hr.: New feed	0.07	.....	0.095	0.15	0.066	0.20	0.062
<65-m. produced	.....	.....	.....	0.054	.....	0.068	0.52
<200-m. produced	0.04	.....	.....	0.032	.....	0.044	0.041

Table 32. Performance of conical ball mills—*Continued*

Plant	Gold Ore *m, q*	Getchell *m*	Miami	Mesabi		Barite *m, r*	Cananea *t*
SPECIFICATIONS OF MILL							
Size: Diam., ft. × length of cylinder, in. *a*	7×48	7×48	8×22	8×22	8×22	8×22	8×28
Speed: R.p.m.	25.4	24.5	21	23.8	23.8	27	18 *w*
% of critical *b*	84	81	75	85	85	96	64
Balls: Weight, tons	14.8	14	6	14	14		15 *w*
% of mill volume *ay*	46	45	20	47	47		46
Diam. of renewals, in.	4		3	3	2 3/8	*s*	2 1/2
Material *c*	*CS*		*CI*				*u*
Liner: Type	Wave		Ribbed			Wave	
Material *c*	*Mn*		*CI*			*CI*	*Mn v*
Power: Installed, hp.	125					100	
OPERATING DATA							
Feed rate: Tons new feed per hr.	4.2	14.6	17.5	15.3	7.4	7.3	21.2 *w*
Tons new feed per hr. per ton of balls	0.28	1.0	2.9	1.1	0.53		1.4
Sizings: Test reference *d*	*54*		*9*	*10*	*11*		*12*
Feed: Limiting size, in.	3/8	3/4	3/8	3/8	3/8	1	0.093
Product: *Mog*	100	20	14	35	100	200	14
Reduction ratios: Limiting sizes	65	23	8	23	65	344	2
80% sizes *h*	70		9	45	130		2.4
Pulp, % solids	75	75	55		70		68
Circulating-load ratio *l*	11	4	*OC*	*DC*	*DC*	Cone	*DC*
Power consumed, hp.: Total	140	137	75	145	145	100	116
Per ton of balls	9.5	9.8	12.5	10.4	10.4		7.7
Steel consumption lb. per ton of new feed: Balls	4.2	1.7	1.2				1.36
Liners (or life, days)							0.14
PERFORMANCE DATA							
Tons per hp-hr.: New feed	0.030	0.093	0.23	0.10	0.051	0.073	0.18
<65-m. produced	0.027		0.11				0.14
<200-m. produced	0.022		0.056	0.051	0.039	0.070	0.091

Plant	Nevada Cons. *x*	Nevada Cons. *x*	Wright-Hargreaves *y, q*	Gold Ore *m, q*	Gold Ore *m, q*	A. S. & R. Co., Parral	Dome *o*
SPECIFICATIONS OF MILL							
Size: Diam., ft. × length of cylinder, in. *a*	8×30	8×30	8×30	8×30	8×30	8×30	8×30
Speed: R.p.m.	24.5	28	21	22.5	21	22	23
% of critical *b*	88	100	75	80	75	79	82
Balls: Weight, tons	12.5	12.5	15.5		15	14	13
% of mill volume *ay*	37	37	45		44	40	39
Diam. of renewals, in.	3	4	3 1/2	4	5	4	4
Material *c*	*CI*	*CI*	*CS*		*FS*	*CI*	*FS*
Liner: Type			*WB*	*WB*	*WB*	Wave	Wave
Material *c*			*Mn z*	*Mn*	*Mn*	*Mn*	*Mn*
Power: Installed, hp.			150	150	125	150	150
OPERATING DATA							
Feed rate: Tons new feed per hr.	17	18.8	11.7	17.1	11.5	18.3	23
Tons new feed per hr. per ton of balls	1.4	1.5	0.76		0.77	1.3	1.8
Sizings: Test reference *d*	*13*	*14*	*15*		*55*	*45*	*16*
Feed: Limiting size, in.	1 1/2	0.263	3/8	1/2	1 3/4	3/8	1/2
Product: *Mog*	35	20	20	10	10	8	8
Reduction ratios: Limiting sizes	94	8	11	8	27	4	5
80% sizes *h*	46	23	15		43	5	10
Pulp, % solids	70	72	72	70	70	80	81
Circulating-load ratio *l*	*DC*	*DC*	2.5	*n*	*OC*	3.5	*OC*
Power consumed, hp.: Total	119.8	150	162	150	160	144	125
Per ton of balls	9.6	12.0	10.4		10.6	10.3	9.6
Steel consumption lb. per ton of new feed: Balls	1.34	1.55	2.5		1.53	2.7	0.73
Liners (or life, days)			0.31 *aa*		0.18	0.20 *bc*	0.10
PERFORMANCE DATA							
Tons per hp-hr.: New feed	0.20	0.12	0.072	0.12	0.072	0.13	0.18
<65-m. produced			0.041		0.036	0.042	
<200-m. produced	0.067	0.038	0.023		0.019	0.026	0.045

Table 32. Performance of conical ball mills—*Continued*

Plant	Engels *ab*	Engels *ab*	Miami	Miami	Miami	Miami	Falconbridge
SPECIFICATIONS OF MILL							
Size: Diam., ft. × length of cylinder, in. *a*	8×36	8×36	8×36	8×36	8×36	8×36	8×36
Speed: R.p.m.	20.5	17	20.6	20.6	20.4	20.4	22
% of critical *b*	73	61	74	74	73	73	79
Balls: Weight, tons	12	12	17	17	16	16	15.5
% of mill volume *ay*	32	32	45	45	42	42	41
Diam. of renewals, in.	5	.....	4	2	3	2	4
Material *c*	*FS*	.....	*FS*	*CI*	*CI*	*CI*	*FS*
Liner: Type	*WB*	.....	.....	.....	Wave	Wave	*WB*
Material *c*	*ac*	.....	*Mn*	*CI*	*CI*	*CI*	*Mn*
Power: Installed, hp.	150	150	.....	.....	150	150	150
OPERATING DATA							
Feed rate: Tons new feed per hr.	15.9	9.0	28.5 *ae*	11.4	52	22.4	11.3
Tons new feed per hr. per ton of balls	1.3	0.75	1.7	0.67	3.2	1.4	0.73
Sizings: Test reference *d*	*17*	*18*	*19*	*20*	*23*	*24*	*21*
Feed: Limiting size, in.	1 1/4	0.131	1	3/8	3/8	0.263	1/2
Product: *Mog*	8	48	3	48	4	10	35
Reduction ratios: Limiting sizes	13	11	4	31	2	4	31
80% sizes *h*	30	8	9	16	3	7	56
Pulp, % solids	80	.....	45	34	65	70	76
Circulating-load ratio *i*	*OC*	3.4	*OC*	*DC*	*OC*	0.5	3.0
Power consumed, hp.: Total	148	100	136	146	140	140	155
Per ton of balls	12.2	8.3	8	8.6	8.8	8.8	10
Steel consumption lb. per ton of new feed: Balls	1.0	.....	0.47	.....	0.52	0.54	2.4
Liners (or life, days)	0.23 *ad*	.....	.....	.....	0.17	.....	0.3
PERFORMANCE DATA							
Tons per hp-hr.: New feed	0.11	0.090	0.30	0.078	0.37	0.16	0.073
<65-m. produced	0.053	0.062	0.086	0.068	0.093	0.079	0.057
<200-m. produced	0.030	0.047	0.064	0.043	0.054	0.046	0.035

Plant	Falconbridge	Gold Ore *m, o*	Lead-Zinc Ore *m, l*	Lead-Zinc Ore *m, l*	Silver-Lead Ore *m, l*	Bunker Hill & Sullivan *al*	Lead-Copper Zinc Ore *m, o*
SPECIFICATIONS OF MILL							
Size: Diam., ft. × length of cylinder, in. *a*	8×36	8×36	8×36	8×36	8×36	8×36	8×36
Speed: R.p.m.	19	.....	22	21.5	23	18	23
% of critical *b*	68	.....	79	77	82	64	82
Balls: Weight, tons	15.5	.....	15	16	15	15	17.5
% of mill volume *ay*	41	.....	40	42	40	40	46
Diam. of renewals, in.	4	4	3 1/2	4	3	3 1/2	4
Material *c*	*FS*	*FS*	*FS*	*FS*	*CI*	*FS*	*CI*
Liner: Type	*WB*	.....	Lifter	*WB*	*WB*	Lifter	*WB*
Material *c*	*Mn*	.....	*WhI*	*Mn*	*Mn*	*WhI*	*Mn*
Power: Installed, hp.	150	125	200	.....	150	150	150
OPERATING DATA							
Feed rate: Tons new feed per hr.	11.0	33.3 *au*	25	17.5	11.9	8.8	11.5
Tons new feed per hr. per ton of balls	0.71	.....	1.7	1.1	0.79	0.59	0.66
Sizings: Test reference *d*	*22*	*48*	*50*	.....	.....	*25*	*52*
Feed: Limiting size, in.	1/2	0.263	1/4	1 1/2	3/8	3/8	3/4
Product: *Mog*	48	8	20	28	35	65	48
Reduction ratios: Limiting sizes	42	3	8	65	23	46	62
80% sizes *h*	58	5	3	.....	.....	5	.....
Pulp, % solids	76	.....	78	80	80	74	76
Circulating-load ratio *i*	3.0	*OC*	4.8	2.8	3.6	3.3	4.2
Power consumed, hp.: Total	145	114	142	135	155	125	157
Per ton of balls	9.4	.....	9.5	8.4	10.3	8.3	9.0
Steel consumption lb. per ton of new feed: Balls	2.4	0.7	2.4	1.5	3.8	2.4	2.8
Liners (or life, days)	0.3	.....	0.3	0.18	0.26	0.3	0.18
PERFORMANCE DATA							
Tons per hp-hr.: New feed	0.076	0.28	0.18	0.13	0.076	0.070	0.073
<65-m. produced	0.061	0.090	0.12	.....	.....	0.037	0.060
<200-m. produced	0.036	0.053	0.076	0.046	0.038	0.044	0.040

Table 32. Performance of conical ball mills—*Continued*

Plant	Bunker Hill & Sullivan *af*	Wiluna	A. S. & R. Co., Parral	A. S. & R. Co., Parral	Cons. M. & S.	Cons. M. & S.	Sunshine
SPECIFICATIONS OF MILL							
Size: Diam., ft. × length of cylinder, in. *a*	8×36	8×36	8×36	8×36	8×48	8×48	8×48
Speed: R.p.m.	20.8	23	23	22.5	18.1	18.1	20–21 *ag*
% of critical *b*	74	82	83	81	65	65	71–75 *ag*
Balls: Weight, tons		15	15	15	17	17	20
% of mill volume *ay*		40	39	39	38	38	45
Diam. of renewals, in.	3	4	3	3	2	1 1/2	3
Material *c*	*CI*	*Cr*	*CI*	*CI*	*CI*	*CI*	*FS*
Liner: Type		*WB*	Wave	Wave	Lifter	Lifter	Butt
Material *c*		*Mn*	*Mn*	*Mn*	*CI*	*CI*	*Mn*
Power: Installed, hp.	200	150	150	150	150	150	150–200 *ag*
OPERATING DATA							
Feed rate: Tons new feed per hr.	8.3	15.8	11.9	11.9	20.4	90	15–15.8 *ag*
Tons new feed per hr. per ton of balls		1.1	0.79	0.79	1.2	5.3	0.75
Sizings: Test reference *d*	*26*	*27*	*42*	*43*	*28*	*29*	*30 ag*
Feed: Limiting size, in.	3/8	3/4	3/8	3/8	0.046	0.016	3/4
Product: *Mog*	65	8	35	35	65	100	48
Reduction ratios: Limiting sizes	46	8	23	23	6	3	62
80% sizes *h*		10	24	24			81
Pulp, % solids	50	70	80	80	75	75	78
Circulating-load ratio *i*	2.6	*OC*	3.5	4.6	4.6	0.93	2.8
Power consumed, hp.: Total	134	135	155	150	130	130	140–160 *ag*
Per ton of balls		9.0	10.3	10.0	7.7	7.7	7–8
Steel consumption lb. per ton of new feed: Balls		1.2	3.4	3.4	0.60	0.18	0.13
Liners (or life, days)		0.4	0.24 *az*	0.23 *ba*	0.035	0.012	0.12
PERFORMANCE DATA							
Tons per hp-hr.: New feed	0.062	0.12	0.077	0.079	0.16	0.69	0.10
<65-m. produced	0.037	0.043	0.055	0.057	0.052		0.085
<200-m. produced	0.030	0.028	0.037	0.039	0.096		0.057

Plant	Lead-Zinc *m, l*	Tybo *ah*	Nevada Cons. *x*	Sherritt-Gordon	Mt. Isa *aj*	Mt. Isa *am*	Mt. Isa *an*
SPECIFICATIONS OF MILL							
Size: Diam., ft. × length of cylinder, in. *a*	8×48	8×48	8×60	8×60	8×60	8×60	8×60
Speed: R.p.m.	21.5	19	20	21	20.8	20.8	20.8
% of critical *b*	77	68	71	75	74	74	74
Balls: Weight, tons	13.5	18	20	21	22	20.8	19
% of mill volume *ay*	30	40	39	41	43	41	37
Diam. of renewals, in.			2 1/2	2 1/2	4	2	1 1/2
Material *c*		*CS*	*CCI*	*CI*	*FS*	*CI*	*CI*
Liner: Type			*WB*	Wave	Wave	Wave	Wave
Material *c*		*Mn*	*HCCrS*	*Mn*	*Mn*	*Mn*	*Mn*
Power: Installed, hp.	175	200	150	225	225	225	225
OPERATING DATA							
Feed rate: Tons new feed per hr.	17.9	6.7	54.2	50	27.1	*al*	*al*
Tons new feed per hr. per ton of balls	1.3	0.37	2.7	2.4	1.2		
Sizings: Test reference *d*		*31*	*32*	*57*	*33*	*34*	*35*
Feed: Limiting size, in.	1 1/4	1/2	0.185	0.26	1/2	0.065	0.023
Product: *Mog*	8	48	28	8	8	48	100
Reduction ratios: Limiting sizes	13	42	8	3	6	5	4
80% sizes *h*			7	6	10		
Pulp, % solids	60	75–78	70–72	80	83	80	77
Circulating-load ratio *i*	*OC*	4.0	2.9	*OC*	4.6	*ao*	
Power consumed, hp.: Total	135	139	175	200	195	205	280
Per ton of balls	10	7.7	8.8	9.5	8.9	9.8	10.5
Steel consumption lb. per ton of new feed: Balls	0.13	27	1.25	1.4	0.67	0.83	0.29
Liners (or life, days)		*ai*	0.068	0.18	0.085 *ak*	0.065 *ak*	
PERFORMANCE DATA							
Tons per hp-hr.: New feed	0.13	0.048	0.31	0.25	0.14		
<65-m. produced			0.11		0.060		
<200-m. produced			0.066	0.030	0.041		

Table 32. Performance of conical ball mills—*Continued*

Plant	Lead-Zinc Copper *m, o*	Hoyle	Cons. M. & S. *at*	Cons. M. & S. *at*	Cons. M. & S., *at*	A. S. & R. Co., Parral	Anaconda
SPECIFICATIONS OF MILL							
Size: Diam., ft. × length of cylinder, in. *a*	8×72	9×48 *ap*	10×48	10×48	10×48	10×48	10×48
Speed: R.p.m.	18.5	22.5	16.1	19	16.1	18	20.6
% of critical *b*	66	85	64	76	64	73	83
Balls: Weight, tons	...	28 *aq*	23	25	23	30	24
% of mill volume *ay*	.....	47	33	36	33	43	32
Diam. of renewals, in.	4, 3 1/2	3	2	3	3	3	5
Material *c*	*FS*	*CI*	*CCI*	*CCI*	*CCI*	*CI*	*FS*
Liner: Type	*WB*	Wave	Lifter	Lifter	Lifter	Wave	*bf*
Material *c*	*Mn*	*Mn*	*CI*	*CI*	*CI*	*Mn*	*Mn*
Power: Installed, hp.	225	300	300	300	300	350	800
OPERATING DATA							
Feed rate: Tons new feed per hr.	14.2	24.4 *aq*	45	45	45	24.3	46.0
Tons new feed per hr. per ton of balls	.....	0.87	2.0	1.8	2.0	0.78	1.9
Sizings: Test reference *d*	.....	*56*	*37*	*38*	*39*	*44*	*47*
Feed: Limiting size, in.	1	1/2	3/8	3/8	3/8	3/8	2 *bg*
Product: *Mog*	100	48	28	48	28	35	1/2
Reduction ratios: Limiting sizes	172	42	16	31	16	23	4
80% sizes *h*	.....	48	23	31	28	25	39
Pulp, % solids	.....	80	66	65	68	78	77
Circulating-load ratio *i*	2.8	*DC as*	*OC*	4.7	5.5	2.9	*OC be*
Power consumed, hp.: Total	209	278 *aq*	230	242	210	280	250–290
Per ton of balls	.....	9.9	10	9.5	9.1	9.3	11.2
Steel consumption lb. per ton of new feed: Balls	1.2	2.04	0.55	0.85	0.55	3.3	.....
Liners (or life, days)	0.11	0.22 *ar*	0.05	0.04	0.05	0.17 *bb*	.....
PERFORMANCE DATA							
Tons per hp-hr.: New feed	0.066	0.088	0.20	0.19	0.21	0.087	0.17
<65-m. produced	.....	0.072	.....	0.14	0.14	0.062	0.061 *bh*
<200 m. produced	0.056	0.042	0.064	0.077	0.087	0.043	.....

Plant	Rio Tinto	Gold Ore *m, q*	Hudson-Bay *at*	Hudson-Bay *at*	Gold Ore *m, l*	Mufulira
SPECIFICATIONS OF MILL						
Size: Diam., ft. × length of cylinder, in. *a*	10×60	10×66	10×66	10×66	10×72	10×72
Speed: R.p.m.	18	19	19.2	21.4	19.8	19.1
% of critical *b*	72	76	77	86	79	77
Balls: Weight, tons	30	.....	38	38	38	37.5
% of mill volume *ay*	38	.....	44	44	42	41
Diam. of renewals, in.	3 1/2	3 1/2	3	3	4.3	4 1/2, 3 1/2
Material *c*	*FS*	*CI*	.....	.....	*FS*	*FS*
Liner: Type	.....	Wave	.....	.....	Wave	*WB*
Material *c*	*Cr*	*Mn*	*Cr-Ni*	*Cr-Ni*	*Mn*	*Mn*
Power: Installed, hp.	375	500	400	400	450	450
OPERATING DATA						
Feed rate: Tons new feed per hr.	44.8	34.5	62.5	38.5	30.8	35.6
Tons new feed per hr. per ton of balls	1.5	.....	1.6	1.0	0.81	0.95
Sizings: Test reference *d*	.....	.....	*40*	*41*	*56*	*51*
Feed: Limiting size, in.	1	3/8	1/2	1/2	3/4	3/4
Product: *Mog*	65	20	14	28	48	48
Reduction ratios: Limiting sizes	122	11	11	22	63	63
80% sizes *h*	.....	.....	.....	76	.....	.....
Pulp, % solids	77	78	75	75	79	80
Circulating-load ratio *i*	5 *au*	2.9	*OC*	2.3	3.1	4.2
Power consumed, hp.: Total	343	417	449	424–435	462	390
Per ton of balls	11.4	.....	11.8	11.3	12.1	10.4
Steel consumption lb. per ton of new feed: Balls	.....	2.1	1.1	1.8	1.5	2.5
Liners (or life, days)	.....	0.20	0.03	0.11	0.13	0.3
PERFORMANCE DATA						
Tons per hp-hr.: New feed	0.13	0.083	0.14	0.089	0.067	0.092
<65-m produced	.....	.....	.....	.....	0.055	0.070
<200-m. produced	.....	0.024	.....	.....	0.038	0.045

a Outside dimensions.
b Based on new liners of average thickness.
c See Table 47, Sec. 22.
d Numbers refer to columns in Table 32*a*.
e Estimated.
h Sec. 4, Art. 2.
i Art. 12.
j IC 6314. Primary mill taking high-grade gravity middling.
k IC 6314. Two secondary mills in parallel dividing classifier sand from product of primary mill, note *j*.
l Relatively hard.
m Hardinge Co., *PC*.
n Circuit closed with a screen.
o Relatively soft.
p Britannia type, Art. 5.
q Extremely hard.
r Extremely soft.
s Steel punchings, 1 to 1 1/4-in. diam. × 1/2-in.
t IC 6261.
u C, 1.06%; Mn, 0.687; Cr, 0.338; Si, 0.076; *P*, 0.02; *S*, 0.034%.
v 1 in. thick.
w At 16 1/2 r.p.m. and 9 tons of ball charge the tonnage ground to 48 *mog* was 60% less with only 20% less power.
x McGill, Nevada, plant.
y 140 #4 J 38.
z Total weight, *19,382* lb.
aa Life: In feed cone, 140 to 160 da.; in cylinder, 365 da.; in discharge cone, 260 to 300 da.
ab IC 6550.
ac Composition: C, 0.92%; Cr, 0.15; Mn, 0.62; Si, 0.24; P, 0.03; S, 0.05%.
ad Life of different sections, in days, averages as follows:

Section	Feed cone		Cylinder	Discharge cone		
	Entrance half	Basal half		Basal third	Center third	Discharge end
Liner plate	170	242	204	192	408	640
Wedge bar	.....	158	170	178	289	.....

Liner is inspected every 2 weeks and thin sections are replaced. Sand penetrates under liner and wears shell, to a maximum extent near the inlet; this part of the shell required replacement after 5 years.
ae At 1,100 tons per 24 hr. <200-m. was 21.4% and the product of the secondary circuit (next column) was 3.5% >48-m. and 47.9 <200-m. Compare screen test *20*, Table *32a*.
af IC 6314.
ag One at 20 and one at 21 r.p.m. The higher hourly tonnages and power consumption correspond to the faster mill. Feed and products are reported combined.
ah IC 6430.
ai Feed-cone liners, 8 mo.; cylinder, 14 to 16 mo.
aj IC 7073. Three primary mills.
ak For wears at different parts of mill see Art. 5.
al Unknown. A rough estimate may be made from the flowsheet, Sec. 2, Fig. 118, and from the screen tests, Table 32*a*.
am 3 secondary mills.
an Tertiary mill.
ao 200 tons total feed per hr. per mill.
ap Reverse-cone grate with high-level discharge.
aq At 25-ton ball load new feed is 22.5 t.p.h. and hp. consumed 261; at 24-ton load the corresponding figures are 21.6 and 252.
ar Scrap loss, 32%, included.
as Unit cell in circuit.
at Primary mill
au Tonnage is feed to a desliming classifier that precedes. Mill discharge to rake classifier, overflow to bowl, both sands return to mill.
ay Based on new liners of average thickness and 300 lb. per cu. ft. of struck volume for ball charge.
az Scrap is 58% of total.
ba Scrap is 64% of total.
bb Scrap is 60% of total.
bc Scrap is 61% of total.
bd Scrap is 29% of total.
be Mill discharge to the amount of about 200% of new feed recirculated directly from mill discharge in order to aid in introduction of coarse new feed.
bf Cr-Mo grate 1/2 to 3/4-in. slots (see Fig. 47).
bg Nominal. See Table 32*a*, note *k*.
bh Tons <100-m. per hp-hr.

Table 32a. Sizing tests for conical ball mills, Table 32

Size	Mesh.....					3	4	6	8	10	14	20	28	35	48	65	100	150	200	<200
	Inches....	1	3/4	1/2	3/8	0.263	0.185	0.131	0.093	0.065	0.046	0.033	0.023	0.016	0.012	0.0082	0.0058	0.0041	0.0029	.....
Reference No.	Material *l*	Cumulative Per Cent. Weight Retained																		
1	NF	5.5 *a*	33.5	63.5	.....	83.2	.....	.....	.....	94.1	.....	96.5	.....	.....	.....	.....	.....	.....	.....	3.5 *b*
	MP									2.1	.....	10.1	.....	30.1	42.6	52.1	59.8	.....	.....	40.2 *b*
2	NF	10.0	31.0	47.0	67.0	.....	.....	.....	80.5	83.5	.....	88.2	.....	91.2	.....	95.6	97.4	.....	.....	3.1 *b*
	MP									1.4	.....	10.0	.....	29.0	.....	44.5	57.1	.....	62.1	37.9
3	NF						20.6	41.6	68.6	.....	.....	88.1	91.2	93.2	.....	96.4	.....	.....	.....	3.6 *b*
	MP											8.0	26.0	33.2	45.4	57.0	69.7	77.2	83.9	16.1
4	NF		6.7	26.4	.....	54.9	.....	.....	.....	77.2	.....	84.7	87.7	88.8	.....	90.4	92.0	92.9	93.9	6.1
	MP					5.2	.....	.....	.....	21.5	.....	41.8	53.7	58.6	.....	65.4	71.6	74.7	78.2	21.8
5	NF					1.5	20.6	43.4	55.9	66.2	73.4	78.1	82.9	87.5	90.1	93.2	97.0	.....	.....	3.0 *b*
	MP									0.5	1.6	4.0	9.0	16.6	26.4	36.6	48.8	56.8	63.5	36.5
6	NF *c*									0.7	2.2	5.7	12.9	23.3	37.3	51.2	65.5	72.3	77.1	22.9
	MP									0.2	0.5	1.6	4.7	12.3	26.1	46.1	67.9	78.1	84.0	16.0
	CS									1.5	2.3	4.9	10.3	21.0	36.4	57.0	79.0	88.6	93.6	6.4
	CO															1.6	8.9	19.6	30.7	69.3
7	CO														22.0	33.0	45.0	55.0	75.0	25.0
8	NF			1.1	10.3	34.3	.....	.....	.....	.....	65.8	.....	76.0	.....	83.2	85.0	86.5	87.1	89.4	10.6
	CO										8.0	.....	23.0	.....	43.0	49.0	55.0	61.5	68.0	32.0
9	NF					3.9	14.4	34.4	51.4	64.7	74.8	81.8	87.4	89.5	90.9	91.5	92.5	93.4	93.9	6.1
	MP										0.8	3.9	12.0	22.7	35.9	44.9	56.6	65.6	69.4	30.6
10	NF						29.2	.....	55.4	.....	69.5	.....	78.1	.....	82.8	.....	86.1	.....	89.4	10.6
	CO														4.3	.....	20.1	.....	38.9	61.1
11 *d*	CO																1.4	.....	13.2	86.8

12	NF									2.2	9.7	23.8	42.0	59.6	73.5	85.2	92.5	95.9	97.0	3.0
	MP										0.5	2.1	6.4	14.5	29.1	50.7	68.7	81.6	87.7	12.3
	CS										0.8	2.6	7.7	17.5	32.9	56.9	75.0	87.6	93.1	6.9
	CO														1.7	10.3	24.3	34.8	46.6	53.4
13	NF	9.1	.....	20.9	.....	.....	44.3	.....	53.1	58.3	61.9	65.7	69.2	72.6	75.3	78.1	81.8	84.2	85.8	14.2
	MP						3.4	.....	5.4	7.4	9.8	14.2	21.2	35.2	46.2	56.6	66.2	71.6	74.6	25.4
	CO													1.8	.....	.....	.....	.....	52.2	47.8
14*e*	MP						2.1	.....	4.4	7.9	11.6	18.6	29.7	44.3	53.9	62.4	70.6	74.9	77.3	22.7
	CO											0.5	.....	.....	.....	.....	.....	.....	54.3	45.7
15	NF					1.9	.....	39.3	.....	63.6	.....	77.4	82.8	85.3	87.8	89.9	91.7	92.9	94.1	5.9
	CF					0.5	.....	13.8	.....	26.3	.....	43.6	58.0	70.0	76.7	83.0	87.2	90.0	91.8	8.2
	MP							1.6	.....	6.8	.....	20.5	33.8	46.5	57.7	67.1	74.3	78.9	83.1	16.9
	CO											0.6	3.5	10.4	20.5	32.8	44.5	53.1	61.9	38.1
16	NF			0	.....	24	.....	.....	.....	.61	.....	.....	.....	.....	81	.....	87	.....	89	11
	MP									4	.....	16	.....	.....	35	46	55	.....	64	36
17	NF	1.7	17.6	35.5	50.7	62.6	68.4	72.2	75.7	79.0	81.1	82.8	84.0	87.0	89.6	90.8	92.4	93.1	95.8	4.2
	MP								1.4	3.3	5.7	10.1	19.5	28.0	35.4	43.0	52.2	57.1	68.8	31.2
18	NF								2.6	6.0	10.3	17.9	34.3	49.3	61.6	71.4	78.3	81.3	86.9	13.1
	MP												0.6	3.0	9.2	19.5	39.0	46.5	69.1	30.9
	CS												0.7	3.8	11.7	24.4	47.4	55.4	78.8	21.2
	CO														0.2	2.0	9.1	14.8	34.6	65.4
19	NF	0.4	3.1	19.7	31.8	42.8	49.9	60.5	.....	67.8	72.0	75.4	78.7	81.1	83.6	85.5	87.6	89.5	90.4	9.6
	MP					0.6	2.2	5.3	10.4	16.9	24.5	31.1	39.7	44.9	52.2	56.9	62.0	67.0	69.2	30.8
20	NF					2.2	4.6	9.5	17.6	28.5	41.6	55.9	70.5	79.7	86.6	90.5	93.4	95.0	95.7	4.3
	CO														0.1	4.0	17.0	34.5	40.2	59.8
21	NF					32.6	.....	58.3	.....	71.2	75.0	78.8	.....	.....	86.9	88.4	90.2	91.7	93.4	6.6
	CF					3.2	.....	15.4	.....	21.4	25.4	31.3	.....	.....	70.0	76.2	83.5	87.3	90.6	9.4
	MP							0.8	.....	3.5	6.3	10.8	.....	.....	48.5	57.1	67.4	73.4	79.7	20.3
	CO														3.7	10.8	22.1	32.2	45.7	54.3
22	NF					29.6	.....	55.5	.....	69.0	72.8	76.8	.....	.....	85.6	87.2	89.2	90.9	92.8	7.2
	CF					7.3	.....	14.9	.....	20.5	23.7	28.6	.....	.....	63.8	71.4	81.1	86.0	90.0	10.0
	MP							1.2	.....	..3.6	6.1	9.9	.....	.....	42.4	53.1	65.3	72.4	79.1	20.9
	CO														1.6	7.3	19.4	30.6	45.5	54.5

Table 32*a*. Sizing tests for conical ball mills, Table 32—*Continued*

Size	Mesh					3	4	6	8	10	14	20	28	35	48	65	100	150	200	<200
	Inches	1	3/4	1/2	3/8	0.263	0.185	0.131	0.093	0.065	0.046	0.033	0.023	0.016	0.012	0.0082	0.0058	0.0041	0.0029	.....
Reference No.	Material *l*	Cumulative per cent. weight retained																		
23	NF					2.1	16.6	33.9	47.7	61.1	69.8	76.5	81.2	85.3	88.1	89.8	91.6	92.7	93.6	6.4
	MP					0.1	1.2	3.9	8.0	15.1	23.4	32.6	41.4	50.9	58.9	64.8	71.1	75.3	78.9	21.1
24	NF					0.5	3.1	9.9	19.2	34.9	49.9	61.8	70.0	76.6	81.3	84.2	87.2	89.1	90.5	9.5
	CF						0.2	6.6	12.9	24.1	36.7	50.0	61.1	71.0	77.8	81.8	85.9	88.4	93.4	6.6
	MP								0.1	0.6	3.5	9.4	17.8	29.0	40.6	49.3	59.3	66.1	71.3	28.7
	CO												4.7	13.1	24.7	34.9	46.7	54.9	62.0	38.0
25	NF											3.2	9.2	20.2	34.8	53.4	71.0	81.6	87.2	12.8
	MP												0.7	4.0	13.1	28.7	52.5	66.7	74.3	25.7
	CS												0.7	4.7	16.0	35.4	64.6	80.3	87.6	12.4
	CO															0.4	6.6	14.2	22.4	77.6
26	NF					2.4	22.2	37.4	45.6	51.4	54.6	56.6	58.0	59.0	59.8	60.6	61.5	62.2	63.2	36.8
	CF					0.7	6.1	10.3	12.5	14.1	15.1	15.9	17.4	21.4	26.3	35.4	48.5	58.2	68.4	31.6
	MP											0.1	0.5	2.7	7.1	15.3	28.8	39.5	49.4	50.6
	CO															0.3	3.6	8.6	14.4	85.6
27	NF					39	.....	.....	.....	74	.....	.....	.....	.....	.....	94	96	.....	98	2
	MP						.....	.....	.....	6	.....	.....	.....	.....	.....	58	66	.....	75	25
28	NF												6.6	12.6	21.2	33.6	52.2	65.6	75.8	24.2
	CF												1.8	3.6	7.2	15.1	36.4	56.3	71.1	28.9
	MP												0.6	1.4	3.4	10.2	29.0	48.4	70.2	29.8
	CO														0.4	1.4	4.2	9.4	15.6	84.4
29	CS *l*														1.6	5.4	16.0	33.0	50.0	50.0
	MP														0.2	1.4	7.4	20.0	36.0	64.0
	CO															0.2	1.8	5.4	10.8	89.2
30	NF			4.1	.....	53.5	.....	.....	.....	75.4	.....	84.1	.....	87.5	.....	90.6	91.9	.....	93.7	6.3
	CF			1.7	.....	14.0	.....	.....	.....	19.8	.....	22.1	.....	38.9	.....	67.2	81.2	.....	91.4	8.6
	MP													16.0	.....	44.9	61.0	.....	76.3	23.7
	CO															6.0	15.5	.....	36.5	63.5

31	MP										9.8	.....	13.9	17.8	23.7	34.0	45.4	55.5	62.2	37.8
	CO															5.1	14.2	23.0	31.2	68.8
32	NF						0.5	3.4	11.2	19.0	27.4	33.5	40.6	46.1	52.6	59.0	65.2	70.4	75.8	24.2
	CF						0.4	2.5	7.9	13.2	21.1	28.4	40.0	52.4	64.5	74.3	80.7	84.8	88.1	11.9
	MP						0.4	2.0	5.5	9.4	14.4	19.8	29.1	40.3	52.9	64.5	72.5	77.9	82.4	17.6
	CO											0.2	1.2	3.8	11.3	22.8	34.5	44.1	54.5	45.5
33	NF					12.0	35.4	47.4	60.0	67.8	74.2	78.1	81.6	84.3	86.4	87.9	89.1	90.1	91.0	9.0
	MP										26.0	36.0	47.0	57.0	65.5	70.5	75.5	79.5	82.5	17.5
	CS										41.0	52.5	64.5	73.5	80.0	84.5	87.5	90.0	92.0	8.0
	CO									2.7	7.5	12.9	20.7	29.6	38.0	45.3	52.1	57.3	61.5	38.5
34	CS *g*										1.5	4.0	8.0	15.5	29.0	45.5	64.5	80.5	91.0	9.0
	MP										1.5	2.5	6.0	13.0	25.5	40.5	59.5	75.5	85.0	15.0
	CO														1.8	5.5	11.7	19.9	28.9	71.1
35	CS *g*													1.0	2.5	8.0	26.5	55.5	81.0	19.0
	MP														1.0	5.0	22.5	45.0	66.0	34.0
	CO																1.0	4.0	10.0	90.0 *h*
36	NF						36.1	.....	.....	66.5	.....	.....	.....	85.0	.....	88.5	91.1	.....	93.4	6.6
	CS						7.4	.....	.....	17.8	.....	.....	.....	53.3	.....	76.0	86.2	.....	90.5	9.5
	CO															6.4	26.5	.....	45.3	54.7
37	NF						17.1	31.4	.....	63.9	.....	.....	.....	.....	.....	.....	.....	.....	86.5	13.5
	MP												1.4	3.8	8.6	15.8	32.0	43.4	54.8	45.2
38	NF						17.8	31.0	.....	.....	.....	63.1	66.3	70.1	73.4	76.9	81.1	84.5	87.0	13.0
	MP											5.7	9.4	17.9	30.4	50.0	71.6	81.1	85.3	14.7
	CS											7.9	12.7	23.9	39.4	61.5	83.5	90.7	93.6	6.4
	CO														2.0	5.6	19.4	34.8	46.5	53.5
39	NF						16.7	30.3	.....	.....	.....	61.8	65.5	69.4	73.2	75.8	80.2	83.5	86.0	14.0
	MP											10.9	17.0	28.2	39.9	56.3	72.2	80.4	85.4	14.6
	CS											12.2	18.5	33.1	46.5	62.8	79.8	87.3	91.3	8.7
	CO											0.2	0.8	2.3	4.6	10.1	22.3	34.2	44.8	55.2
40	NF			0.6	40.1	.....	.....	.....	.....	.....	.....	.....	.....	.....	.....	.....	.....	.....	.....	59.9 *b*
	MP															40.0	47.5	53.0	60.0	40.0 *m*

Table 32*a*. Sizing tests for conical ball mills, Table 32—*Continued*

Size	Mesh					3	4	6	8	10	14	20	28	35	48	65	100	150	200	<200
	Inches	1	3/4	1/2	3/8	0.263	0.185	0.131	0.093	0.065	0.046	0.033	0.023	0.016	0.012	0.0082	0.0058	0.0041	0.0029	.....
Reference No.	Material *l*	Cumulative per cent. weight retained																		
41 *i*	MP															46.0	58.0	65.0	72.0	28 *n*
	CS															64.9	76.5	82.3	86.6	13.4 *o*
	CO															12.8	20.8	27.8	38.4	61.6 *p*
42	NF					7.1	.....	.....	.....	57.9	.....	.....	70.7	.....	77.6	80.7	83.4	86.1	88.1	11.9
	CO														3.7	8.8	17.5	28.9	39.8	60.2
43 *j*	CO														3.4	8.7	17.4	28.5	39.1	60.9
44 *j*	CO														3.4	8.8	16.9	27.9	38.6	61.4
45 *j*	CO									3.0	.....	.....	21.3	.....	41.2	48.5	55.9	63.0	67.8	32.2
46	NF									23.3	.....	.....	62.1	.....	77.6	82.4	86.0	88.9	90.9	9.1
	CO									2.3	.....	.....	24.0	.....	40.5	48.4	55.5	62.8	68.9	31.1
47	NF	*k*	40.3	49.1	.....	.....	.....	.....	.....	.....	.....	.....	.....	.....	.....	.....	90.2	.....	.....	9.8 *b*
	MP			1.2	.....	4.3	5.7	7.0	8.7	11.1	.....	19.2	25.9	35.0	.....	46.8	54.1	.....	.....	45.9 *b*
48	CS					1.0	11.4	27.1	43.3	56.0	67.6	76.7	.....	87.9	91.4	93.9	95.4	96.2	97.0	3.0
	MP						0.2	1.2	3.3	6.8	13.0	21.9	.....	42.5	52.8	61.9	68.7	73.6	77.9	22.1
49	NF			25	.....	43	.....	56	.....	68	.....	74	77	81	88	90	92	93	94	6
	MP									7	.....	16	25	40	51	63	73	80	87	13
50	NF							51	.....	.....	81.4	.....	90.0	.....	95.4	97.0	98.2	99.2	99.4	0.6
	MP								2.5	.....	16.0	.....	37.5	.....	62.5	70.0	77.0	83.5	86.0	14.0
	CS								4.5	.....	20.5	.....	43.5	.....	69.5	78.0	84.0	88.5	92.0	8.0
	CO												6.0	.....	22.0	29.0	39.5	49.5	57.5	42.5
51	NF		0.4	5.4	23.1	37.3	43.3	50.2	55.8	59.8	63.7	67.1	70.9	74.9	77.9	82.4	85.2	88.8	93.5	6.5
	CO															6.3	19.0	31.9	43.3	56.7

52	NF		1.5	12.8	30.8	55.3	59.4	63.7	68.3	72.5	75.5	78.7	81.2	83.9	86.0	87.8	89.6	90.8	91.8	8.2
	MP						0.7	1.7	2.9	4.4	6.8	9.9	16.8	26.0	38.2	54.3	70.3	78.9	85.8	14.2
	CS						1.7	2.6	3.7	5.1	7.8	11.8	19.1	30.6	44.7	62.9	79.2	87.3	94.8	5.2
	CO														0.9	5.5	15.5	25.1	37.9	62.1
53	NF					11.6	.....	.....	62.6	.....	.....	.....	.....	.....	79.2	83.0	85.6	88.0	89.8	10.2
	MP															31.9	47.4	63.0	72.2	27.8
	CS															46.5	64.0	82.9	90.2	9.8
	CO																2.7	12.3	25.1	74.9
54	NF					7.6	.....	.....	75.0	.....	.....	.....	.....	.....	91.0	92.8	93.8	94.6	96.6	3.4
	MP															49.9	67.8	80.0	85.4	14.6
	CS															57.2	74.9	85.9	90.4	9.6
	CO																2.3	11.3	23.4	76.6
55	NF	31.6 *q*	.....	62.3	.....	76.1	.....	.....	.....	89.8	.....	93.9	.....	96.4	.....	97.8	98.4	.....	.....	1.6 *b*
	MP									2.0	.....	9.3	.....	26.8	.....	47.2	62.8	67.9	71.9	28.3
56	NF				11.7	34.4	50.5	61.6	69.1	75.3	79.2	81.8	84.0	85.6	87.3	88.6	89.7	90.8	91.4	8.6
	MP				0.9	2.7	4.1	5.4	6.9	8.6	10.8	14.1	19.3	26.7	40.0	50.8	59.1	66.2	70.3	29.7
	CS				3.2	7.9	11.5	14.4	17.0	20.5	24.4	29.7	38.1	50.4	68.3	79.2	85.4	88.5	90.4	9.6
	CO														1.0	6.7	16.0	26.7	34.2	65.8
57	NF						15.5	.....	.....	52.5	.....	.....	70.8	.....	.....	83.4	87.3	89.6	92.1	7.9
	MP									6.1	.....	.....	23.3	.....	.....	52.9	62.3	70.7	80.8	19.2

a All <1 1/4-in.
b Through last screen.
c Estimated from screen tests and tonnages of primary and secondary circuits.
d New feed same as (10).
e New feed same as (13).
f New feed unknown, since it forms a part of classifier sands.
g Total feed to mill; new feed unknown.
h 81% <325-m.
i New feed same as (40).
j New feed same as (42).
k 9.5% >1 1/2-in.; some as coarse as 4-in.
l *CF*, composite feed; *CO*, classifier overflow; *CS*, classifier sands; *MP*, mill discharge; *NF*, new feed.
m 31.5% <325-m.
n 21% <325-m.
o 10.3% <325-m.
p 48.3% <325-m.
q 4% >1 1/2-in.

Distribution curves are shown in Figs. 48 and 49. The solid curves are the means. The points cluster rather closely to the mean except in the case of short-range lightly ground secondary and tertiary products fed with classified sands, with circuits closed by rake-type classifiers. Curves for such products tend to fall as much as 10 or 15% above the mean in the size range from 15 to 50% of limiting. Upward of 55% of open-circuit products and somewhat more than 50% of closed-circuit products are finer than 10% of limiting aperture.

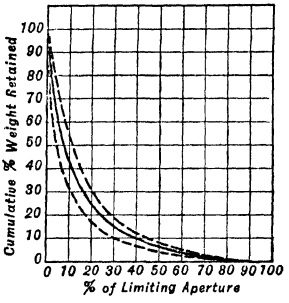

FIG. 48. Characteristic product of conical ball mill (open-circuit grinding).

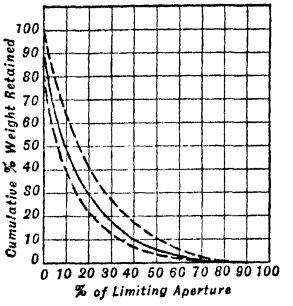

FIG. 49. Characteristic product of conical ball mill (closed-circuit grinding).

Reduction ratios. Nominal limiting ratios range from 2 to 344 with the mean about 15. The range for the 80% ratio is 2.4 to 130 with the mean about 12. In 18% of the mills the limiting ratio is less than 5, and in 65%, less than 30. The low ratios correspond, of course, to high-tonnage primary service, either open circuit or with small circulating loads, and to secondary and tertiary grinds. The very high ratios go with low-capacity one-stage practice with relatively coarse feeds. The mean corresponds, in general, to one-stage flotation grinds from feeds about $^3/_8$-in. size, and to relatively fine primary grinds of coarse feeds in both flotation and cyanide mills.

Capacity. The averages of the performance tables are graphed in Fig. 50. The ranges in values are indicated by the verticals, and the numbers of cases by the numerals set beside

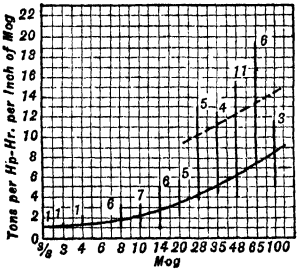

FIG. 50. Capacity of conical ball mill grinding ores wet.

the verticals. For use of the curve in estimating capacities see Art. 7. For discussion of factors affecting capacity see Art. 14. The long upward extensions of the verticals in the range from 28 to 65 *mog* correspond to small reduction ratios in secondary grinding, and the values for such service are better indicated by the dotted curve. Sporadic high values of 119 tons at 100 *mog*, corresponding to a tertiary grind with a reduction ratio of 3, and 25 tons at 200 *mog*, corresponding to the grinding of a very soft barite, are not plotted.

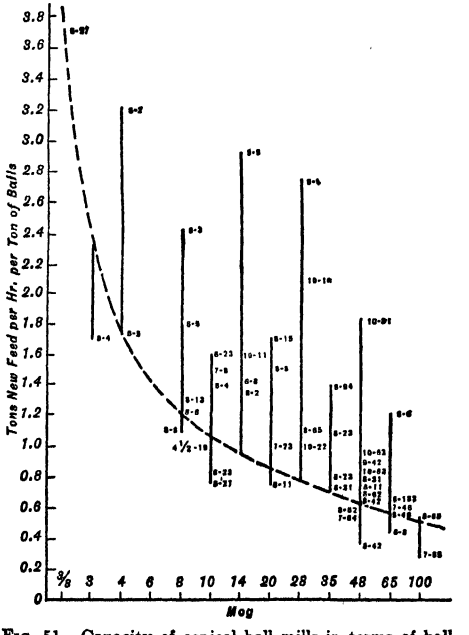

FIG. 51. Capacity of conical ball mills in terms of ball charge when grinding ores wet.

The relationship—or lack of consistency therein—between capacity and ball charge is shown in Fig. 51, in which the verticals represent the spread in values at the different *mogs*, and the numbers are, respectively, the mill diameters and the reduction ratios. There is, of course, a rough inverse relationship between capacity and *mog*, as indicated by the curve. There is also a further rough relationship of capacity to reduction ratio, as indicated by the general trend of the low values for reduction ratio to cluster around the upper ends of the verticals. Finally the large mills can, in general, do more work with a ton of balls than the small mills, which is to be expected from the fact that the horsepower per ton of balls increases as mill diameter increases. In some cases operations occupying unduly low positions on a given vertical are attributable to very hard ores, *e.g.*, the low position of point 8–11 at 20 *mog* (WRIGHT-HARGREAVES) and the relative positions of the two 6-ft. mills at 65 *mog*.

Charge volume can be held higher in a conical mill without a ball-retaining grate than is possible in cylindrical mills because of the tendency of the ball charge to heap up in the cylindrical section. This explains the relatively high volumes found in several nongrated mills.

Power consumption per ton of balls in the usual speed range (75 to 80% of critical) averages 9 hp. per ton for 6-ft. mills, 10 hp. for 8-ft. mills, and 11 hp. for 10-ft. mills and varies roughly with the percentage of critical speed either side of this range. Variation with feed rate and *mog* are shown in Fig. 52, averaged from Table 32, but the values from this figure must be used with due consideration for character of ore and operating conditions, and extrapolation at either end is not justified.

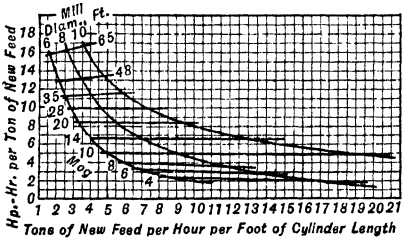

FIG. 52. Approximate relationship between capacity and power consumption for conical ball mills (after Table 32).

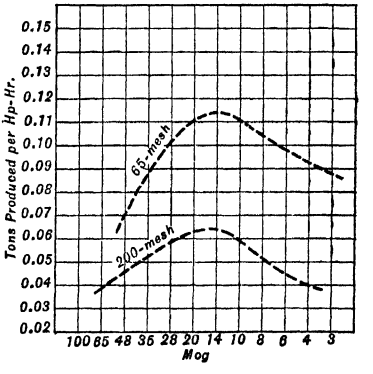

FIG. 53. Trend in production of finished sizes in 8-ft. conical ball mills.

Efficiency. Tons of new feed per hp-hr. is affected by feed rate, *mog*, and size of mill, as shown by Fig. 51, as well as by the character of the ore, as is mentioned in the discussion of that figure. Tons <65-m. and <200-m. produced per hp-hr. are additionally influenced by the size of feed, and probably the effect of the *mog* is accentuated. Fig. 53, which represents very rough trends only, as shown by the 8-ft. mills of the table, indicates maximum production of these fine sizes per unit of power when the *mog* is 14. To the extent that the data are representative, they indicate that primary grinds aimed at this *mog* should produce the maximum quantities of these finished sizes per unit of power.

Speed ranged from 61 to 100% of critical with both mean and average in the range from 75 to 80%. The only apparent correlation from the table is a tendency to run the larger mills somewhat slower than the small ones. The smaller mills represent older practice.

The 10×72-in. mill GOLD ORE, Table 32, was run (*PC*) at 21.8 r.p.m. with all other operating conditions the same except that feed rate averaged 30 t.p.h. Power consumption was 492 hp. Product contained 10.8% >65-m. and 53.7% <200-m. *i.e.*, was slightly coarser than at the lower speed despite the lower tonnage. Tons new feed per hp-hr. was 0.061, off 10%; tons <65-m. produced per hp-hr. was 0.047, off 15%; tons <200-m. produced per hp-hr. was 0.028, off 26%.

Pulp density ranges from 34 to 83% solids. In general the thinner pulps represent the older practices. Recent practice tends toward slightly more water in the finer pulps, but the differences are not great See also Art. 16.

Attendance. See Art. 18.

Lost time. The principal cause is relining. The total should be less than 1%.

Costs. See Art. 20.

10. CYLINDRICAL GRATE BALL MILLS

Grate ball mill is a cylindrical mill with the same general dimensions as the overflow ball mill (Art. 8), but furnished with a grate near the discharge end of the shell. It may be of open-end type, in which case discharging pulp flows directly from the shell periphery or over a low annular weir, and the discharge end, at least, is ring-and-roller supported.

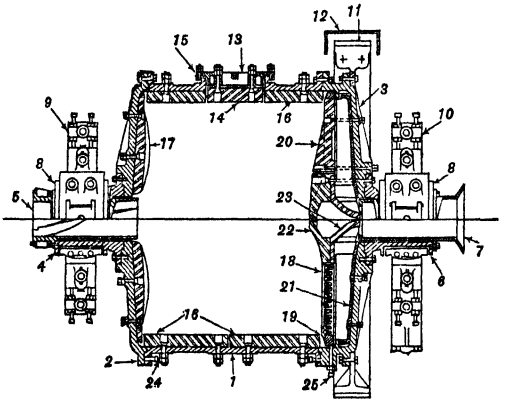

Legend, Fig. 54.

1. Shell. Usually cast; may be rolled plate.
2, 3. Detachable heads.
4, 6. Detachable trunnions.
5, 7. Trunnion liners; stud-bolted to outer faces of trunnions.
8. Trunnion bearings.
9, 10. Sole plates.
11. Driving gear.
12. Gear guard.
13. Manhole cover.
14, 16, 17, 21. Shell and end liners.
15. Manhole gasket.
18. Grate.
19, 20. End and side clamp bars, respectively, for grate sections.
22. Center-discharge liner.
23. Discharge cone.
24. Jack screw.
25. Grate-adjustment screw.

FIG. 54. Marcy grate ball mill, 2-trunnion type. Horizontal section with half-plan on bearings and sole plates.

More commonly the mill is of the two-trunnion type, Fig. 54, and some sort of pulp elevator is provided between the grate and the discharge-end head to lift pulp that passes through the grate into the discharge trunnion.

Grates. The simplest form of grate is a one-piece cast grid attached to the end of the shell of an open-end mill. A modification thereof designed and used at HOLLINGER (*HS*) in converting open-end rod mills to open-end grate-type ball mills is shown in Fig. 55. It consists of a cast-steel frame *A*, 2 in. thick by 8 ft. O.D., bolted to the flanged end of shell *S;* sectional cast grates *G*, 2 1/2 in. thick, with tangential slots tapering outwardly from 3/8-in. aperture to 3/4-in., provided with 3 handles *H* of 1/2-in. forged-steel rod cast in place, and held in place by wedge-shaped bars (not shown) which bolt to the inside of and protect the spokes of the frame; an imperforate cover *C* for the central manhole *M*, with liner *L;* and ring liners *R*, all liners being made of white iron and bolted to the corresponding part with 1-in. forged-head bolts. Discharge ring *D* is made of 5/8-in. plate, bent, welded at the bend, and bolted to the outside of the grate. It was found that the cast-steel grates chipped and peened in service; they were then burned back to proper aperture and hard-surfaced, whereupon the difficulty ceased. COST was about as much as that of a new cast-steel grate; white-iron grates discarded when worn (@ 60 da.) are probably cheaper. Some manufacturers make grates of similar construction with alloy-steel grates and spoke bars, with 10 instead of 8 spokes, and with the slots arranged radially, or with the slots of the inner half of the grid section tangential and the outer half radial. In other forms rectangular or rounded holes replace the slots.

Grates for trunnion-discharge mills are spaced a few inches inside the discharge-end head (Fig. 54) and are provided with radial or spiral fins or lifters (Fig. 56) terminating near the center on a conical projection (item 23, Fig. 54), which directs the lifted pulp into the discharge trunnion. The latter may be fitted with a liner having a rim at the inner end to lessen spill back into the shell.

In the form shown in Fig. 56, a cylindrical liner box *a* carrying the lifters *b* (spiral or radial) is bolted to the inside of the discharge head *c* and carries the grid on its inner end.

A more elaborate form with provision for adjusting the height of discharge through the grid is shown in Fig. 57. The diaphragm frame *a* comprises a transverse casting *a* with coned center *n* from which radiate ribs *k* extending to the mill head *p*. The diaphragm is bolted to the head by bolts *f*. It is perforated by several circumferential rows of relatively large round holes *l*. Rectangular grates *b* are made up of tempered high-carbon tool-steel bars milled to a transverse taper, leaving suitable spacer sections, drilled and riveted together. The grates are held to the inner face of the diaphragm, suitably spaced therefrom, by wedge blocks *c*, which, in turn, are bolted into place by through bolts *d*. Liner blocks *g* held by bolts *e* protect the remaining inner surface of the diaphragm. A central discharge pipe *h*, projecting through the center of the trunnion, acts as an emergency overflow. If no such provision is made, an overloaded mill will discharge back through the feed trunnion and may require several hours to work back to normal. Pulp gradient in the mill is controlled by plugs inserted into the holes *l*, to which access is had by handholes *m*, suitably spaced.

Grate apertures range from 1/4 to 1 in. according to the size at which it is desired to reject balls. The greater the spacing the less interference with pulp flow and the less the likeli-

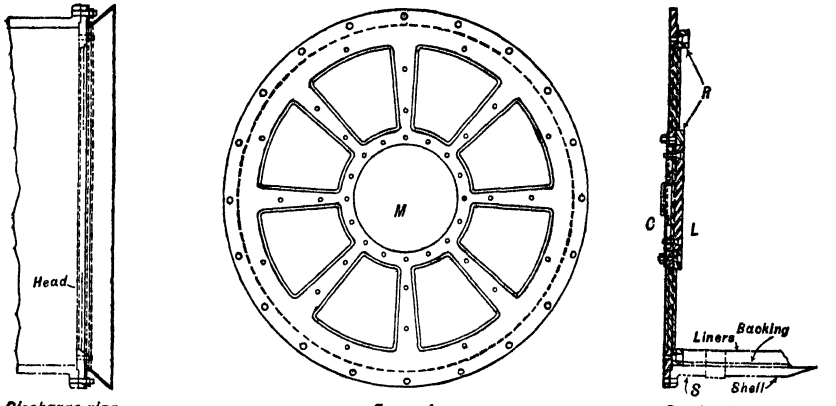

FIG. 55. Sectional cast grate at HOLLINGER.

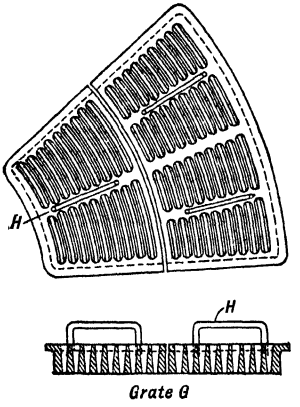

hood of blinding by wedged balls, wood, hemp, etc. Total area of opening should be as large as possible when high tonnages of pulp are to be put through the mill. The interior surface should be reasonably smooth. Taper should be definite and continuous; 1/8 in. each side of a bar is usually considered sufficient. Increase in tendency to blind with increase in thickness usually limits life to twice liner life. The grate has no function in control of size of mill product except as it controls pulp gradient.

Material for grates should be hard enough not to peen under the battering of the balls and tough enough not to chip. For this reason tool steels and nickel and chrome steels are frequently used despite their high prices. At SYLVANITE (*41 CIMM 286*), with very hard ore, cast chrome-molybdenum steel grates 3 1/2 in. thick have an average life of 240 days.

Manufacturers' data. See Table 29.

Performances of grate ball mills are given in Table 33.

Size of feed to the 58 mills reported ranged from 2-in. to 48-m. but at 12 mills out of the 58 the feed was in the size range of 1- to 2-in. limiting size, and at 10 in. the range 1/2- to 1/4-in. Only 23% of the mills report feeding at sizes finer than 1/4-in. limiting.

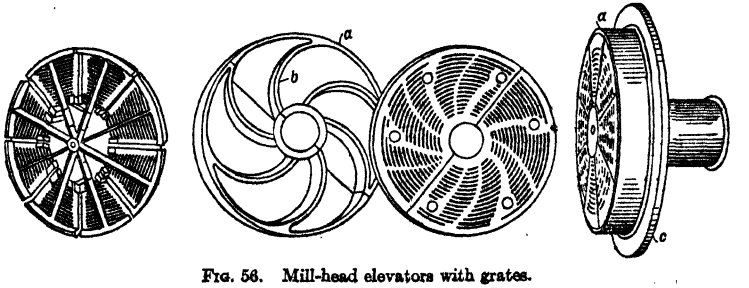

FIG. 56. Mill-head elevators with grates.

Size of product from the 58 mills reported ranged from 3 *mog* to 150 *mog*. Twenty-one of the mills were in primary service in 2-stage grinding, and of these 8 discharged at 3 to

20 *mog* and 10 at 28 to 35 *mog*. Eight of the total were doing one-stage grinding for flotation. Only 2 were in secondary service (but see grated tube mills, Art. 11). Based on this particular random cross-section of practice, the field of the grate ball mill is definitely in primary or one-stage service delivering in the range of 28 to 65 *mog*.

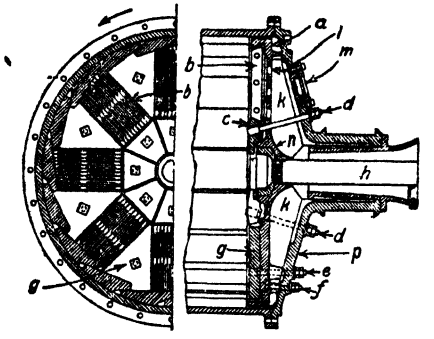

FIG. 57. Grate discharge for Allis-Chalmers ball mill.

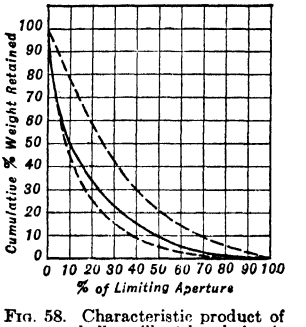

FIG. 58. Characteristic product of grate ball mill (closed-circuit grinding).

Distribution curves are shown in Fig. 58. The solid curve is the mean. Sizings of fine short-range products and tough feeds lie between the mean and the upper dotted curve; those for relatively coarse products lie below the full curve. The 80% size is 20 to 50% of limiting size. Fifty per cent. of the product of a 48- or 65-m. grind of an average ore is finer than 10% of the limiting aperture of the product.

Reduction ratios. Nominal limiting ratios range from 1.4 to 180, with the mean about 25. The 80% ratio ranges from 1.2 to 140, with the mean also about 25. The mean ratios correspond to reduction of $^1/_2$- to $^1/_4$-in. feeds to coarse flotation sizes or to a fine primary product in two-stage work. The high ratios represent one-stage grinds from 1-in. or coarser to flotation size and constitute about 20% of the whole.

Capacity. Controlling factors are discussed in Art. 14. Averages of the performance tables are graphed in Fig. 59, with ranges indicated by the verticals and the numbers of cases shown by the numerals adjacent to the range lines. With the exception of 2 of the

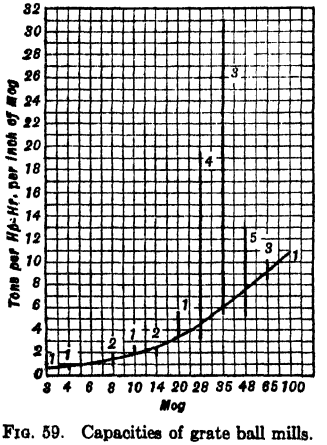

FIG. 59. Capacities of grate ball mills.

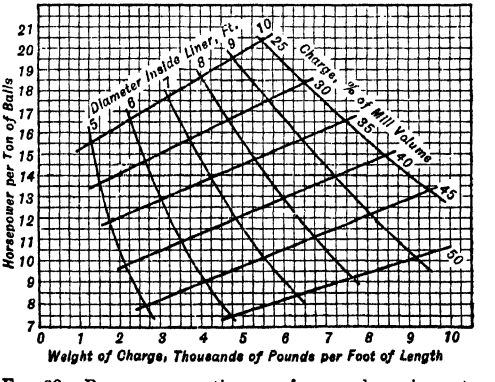

FIG. 60. Power consumption *vs.* charge volume in grate ball mills (averaged from Table 33; speed, 75 to 80% of critical).

values for 28 *mog*, 1 for 35 *mog*, and 1 for 48 *mog* the values cluster exceptionally close to the curve. For estimates apply the method of Art. 7 to Figs. 59 and 60. Capacity in tons per hr. per ton of charge through the normal reduction range averages about 2.6 in the range of 8 to 20 *mog* and 1.2 in the range of 28 to 65 *mog*. (See discussion under ***Capacity***, Art. 7.)

Table 33. Performance of grate ball mills (wet)

Plant (or ore *br*)	Gold-quartz	Gold-quartz	Pyritic gold	Wolframite ore *bo*	Molybdenite ore	Gold-quartz
SPECIFICATIONS OF MILL						
Size: Diam. × length, ft. *a*	2 1/2×3 1/2	2 1/2×4 1/2	3.3×5	3.6×3	4.6×4	4.6×4
Speed: R.p.m.	38	38	34	27	26 1/2	28 1/2
% of critical *b*	78	78	80	68	74	80
Balls: Weight, tons	0.9	1	2.2	2	2	3.4
% of mill volume	33	37	30	35	17	29
Diam. of renewals, in.	4	4	4	3	4	4
Material *s*	*FS*	*FS*	*FS*	*FS*	*FS*	*FS*
Liner: Type	*MW*	*MW*	Step	Step	Step	Step
Material *s*	*Mn*	*Mn*	*Mn*	*Mn*	*Mn*	*Mn*
Grates: Type *bq*	Tan	Tan	Sl	Sl	Sl	Sl
Material *s*	*Cr-Mo*	*Cr-Mo*	*CAS*	*CAS*	*CAS*	*CAS*
Aperture, in.	5/16	5/16	5/16	3/16	3/8	3/8
Power: Installed, hp.			25	20		40
OPERATING DATA						
Feed rate: Tons new feed per hr.	0.83	1.0	1.9	1.7	1.7	2.4
Tons new feed per hr. per ton of balls	0.92	1.0	0.86	0.85	0.85	0.71
Sizings: Test reference *c*						
Feed: Limiting, in.	1	1 1/2	1	0.033	2	2
Product: *Mog*	35	35	48 *bs*	28 *bt*	100	48
Reduction ratios: Limiting sizes	62	93	83	1.4	345	166
80% sizes *g*						
Pulp, % solids	70	71	70	70	76	72
Circulating-load ratio *h*	CC	CC	4	CC	CC	CC
Power consumed: Hp.	6 *e*	8 *e*	22	16.9	35	38
Per ton of balls	6.7	8	10	8.4	17.5	11.2
Steel consumption, lb. per ton of new feed: Balls				0.8	2.3	
Liners (or life days)				(18 mo.)	0.79	
Grates (or life days)				(2 1/2 yr.)	0.147	
PERFORMANCE DATA						
Tons per hp-hr.: New feed	0.14	0.12	0.086	0.10	0.048	0.063
<65-m. produced						
<200-m. produced			0.024			

Plant (or ore *br*)	Lead-zinc ore	Siscoe *l*	United Eastern *k*	Magma	Matahambre *o*	Matahambre
SPECIFICATIONS OF MILL						
Size: Diam. × length, ft. *a*	4.6×5	5×5	5×6	5.9×4 1/2	5.9×4 1/2	5.9×4 1/2
Speed: R.p.m.	28 1/2	27 1/2	28	25	25	28
% of critical *b*	80	78	79	78	78	87
Balls: Weight, tons	4	6.5	4	5	4.5	
% of mill volume	27	45	25	27	24	
Diam. of renewals, in.	4	4	2	5	4 1/2	3
Material *s*	*FS*	*FS*	*Cr*	*FS*	*FS*	*FS*
Liner: Type	Step	Wave	Wave	Wave *l*	Wave	Smooth
Material *s*	*Mn*	*Mn*	*Cr*	*Mn*	*Mn*	*Mn*
Grates: Type *bq*	Sl		Rad	*n*		Bar
Material *s*	*CAS*			*Cr*		*Mn*
Aperture, in.	3/8	1/4		3/16		7/16
Power: Installed, hp.	50		75		100	100
OPERATING DATA						
Feed rate: Tons new feed per hr.	6.6	4.8	3.8	10.4	13.5	10.4
Tons new feed per hr. per ton of balls	1.6	1.7	0.95	2.1	3.0	
Sizings: Test reference *c*		*6*	*2*	*5*	*4*	*5 q*
Feed: Limiting, in.	2	2	0.046	2	3/4	1/2
Product: *Mog*	20	35	100	14	8	28
Reduction ratios: Limiting sizes	61	125	8	44	8	22
80% sizes *g*		5	3	27	6	22
Pulp, % solids	74	1.99 *j*	@ 70	65	83	78
Circulating-load ratio *h*	4	2.8	1.3	0.5	1.1 *p*	2.0–4.0
Power consumed: Hp.	46	55	63	90 *e*	89	90
Per ton of balls	11.5	8.5	15.7	18.0	18.9	
Steel consumption, lb. per ton of new feed: Balls		1.5	3.2	1.2	0.69	1.42 *r*
Liners (or life days)			0.17	0.20 *m*	0.54	0.68 *r*
Grates (or life days)			(330)	0.06		0.10
PERFORMANCE DATA						
Tons per hp-hr.: New feed	0.14	0.087	0.061	0.12	0.16	0.12
<65-m. produced		0.060	0.021	0.048		0.068
<200-m. produced		0.046	0.031	0.023	0.027 *e*	0.045

Table 33. Performance of grate ball mills (wet)—*Continued*

Plant (or ore *br*)	Siscoe *l*	Gold-quartz	Gold-quartz	Gold-quartz	Lead-zinc ore	Mother lode gold ore
SPECIFICATIONS OF MILL						
Size: Diam. × length, ft. *a*	5.9×4 1/2	5.9×4 1/2	5.9×4 1/2	5.9×4 1/2	5.9×6	6×6
Speed: R.p.m.	25	25	24	25	25	24
% of critical *b*	78	79	76	79	79	78
Balls: Weight, tons	8.5	4.8	6	4.5	7+	10
% of mill volume	45	25	31	24		42
Diam. of renewals, in.	5	5	4	5	4	3 1/2
Material *s*	*Cr*	*FS*	*FS*	*FS*	*FS*	*CS*
Liner: Type	Wave	Step	Step	Step	Step	Step
Material *s*	*Mn*	*Mn*	*Mn*	*Mn*	*Mn*	*Mn*
Grates: Type *bq*						Tan
Material *s*		*CAS*	*CAS*	*CAS*	*CAS*	*CAS*
Aperture, in.	1/4	3/8	1/4	3/8	3/8	1/4
Power: Installed, hp.		100	75	100	125	
OPERATING DATA						
Feed rate: Tons new feed per hr.	7.3	6.3	3.8	11.6	10.2	4.8
Tons new feed per hr. per ton of balls	1.7	1.3	0.63	2.6		0.48
Sizings: Test reference *c*	*1*					
Feed: Limiting, in.	2	1	1	2	1/2	1 1/2 *bu*
Product: *Mog*	28	48	65	20	48	150 *bv*
Reduction ratios: Limiting sizes	87	83	122	61	42	
80% sizes *g*	74					
Pulp, % solids	2.07 *j*	72	74	70	72	78
Circulating-load ratio *h*	3.4	4.8	5	2.5	5–6	6
Power consumed: Hp.	94	90	87	86	118	121
Per ton of balls	11.0	18.7	14.5	19.1		12.1
Steel consumption, lb. per ton of new feed: Balls	1.78	2.6		0.90		3.2
Liners (or life days)		(166)		0.27		(8 to 9 mo.)
Grates (or life days)		(200)		0.20		(14 to 16 mo.)
PERFORMANCE DATA						
Tons per hp-hr.: New feed	0.078	0.070	0.044	0.14	0.085	0.040
<65-m. produced	0.058					
<200-m. produced	0.039					0.035 *e*

Plant (or ore *br*)	Gold Road	Gold Road	Moneta Porcupine *u*	Mt. Lyell	Chino	Engels *v*
SPECIFICATIONS OF MILL						
Size: Diam. × length, ft. *a*	7×6	7×6	6×8	6×8 1/2	6×10	6×12
Speed: R.p.m.	22 1/2	22 1/2	26	26.1	20	24
% of critical *b*	70	70	80	81	62	74
Balls: Weight, tons	12.5	12.5		16.8	18	14
% of mill volume	48	48		47	50	31
Diam. of renewals, in.	3 1/2	2	4	2	2	2 1/2
Material *s*	*CI*	*CI*	*FS*	*FS, CI*	*Mn*	*CCI*
Liner: Type			Wave *t*	*WB*	Step	*MW*
Material *s*	*Mn*	*Mn*	*Mn*	*Mn*	*Whl*	*CCI*
Grates: Type *bq*						
Material *s*	*TS*	*TS*		*Cr*	*Whl*	*CCI*
Aperture, in.	1/2	1/2		1/2	1/2	
Power: Installed, hp.	200	200	125	200	100	150
OPERATING DATA						
Feed rate: Tons new feed per hr.	17	67	7.5	69	25	12
Tons new feed per hr. per ton of balls	1.4	5.4		4.1	1.4	0.86
Sizings: Test reference *c*	*7*	*8*	*9*	*10*	*11*	*12*
Feed: Limiting, in.	1/2	0.023	1	0.046	0.13	0.13
Product: *Mog*	3	35	48	28	20	65
Reduction ratios: Limiting sizes	2	1.4	83	2	4	16
80% sizes *g*	21	1.2	103	1.4	4	10
Pulp, % solids	78	73	74.5	70	70	76
Circulating-load ratio *h*	2.4	*OC*	6.2	0.2	*OC*	3.2
Power consumed: Hp.	190	180		200	130	160
Per ton of balls	15.2	14.4		11.9	7.2	11.4
Steel consumption, lb. per ton of new feed: Balls	3.6	2.6	1.6	0.42	1.11	
Liners (or life days)	0.41	0.30	0.32	0.32	(365)	0.10
Grates (or life days)	0.035	0.024		(345)	(30 to 60)	(180 to 240)
PERFORMANCE DATA						
Tons per hp-hr.: New feed	0.090	0.37		0.34	0.19	0.075
<65-m. produced	0.053	0.046		0.066	0.12	0.051
<200-m. produced	0.030	0.044		0.058	0.076	0.041

Table 33. Performance of grate ball mills (wet)—*Continued*

Plant (or ore *br*)	Pecos *x*	Walker Mine *y*	Gold-quartz	Copper ore	Gold-quartz *bw*	Gold-quartz *bp*
SPECIFICATIONS OF MILL						
Size: Diam. × length, ft. *a*	7×5	7×5	7×5	7×5	7×6 *ci*	7×7
Speed: R.p.m.	22 1/2	24	22 1/2	22 1/2	22 1/2	22
% of critical *b*	76	80	78	78	78	76
Balls: Weight, tons	10	9	10	7.5	12	14
% of mill volume	34	31	34	25	35	35
Diam. of renewals, in.	4 1/2	4	5	4	3	4
Material *s*	*FS*	*FS*	*FS*	*FS*	*FS*	*FS*
Liner: Type	Step	Shiplap	Step	Step	Block	Step
Material *s*	*Mn w*	*Mn*	*Mn*	*Mn*	*Mn*	*Mn*
Grates: Type *bq*	Tan	.....	Sl	Sl	Tan	Tan
Material *s*	*CAS*	*Cr*	*CAS*	*CAS*	*CAS*	*CAS*
Aperture, in.	1/4	1/4	3/8	1/4	3/8	3/8
Power: Installed, hp.	150	200	150	150	.....	.....
OPERATING DATA						
Feed rate: Tons new feed per hr.	10.7	16.7	12.5	9.2	7.9	14.6
Tons new feed per hr. per ton of balls	1.1	1.9	1.2	1.2	0.66	1.0
Sizings: Test reference *c*	*13*	*14*	.....	.....	.....	.....
Feed: Limiting, in.	1 1/2	1 1/2	3	3/4	1/2	7/8
Product: *Mog*	65	28	28	100	48 *bx*	65
Reduction ratios: Limiting sizes	180	65	11	129	42	107
80% sizes *g*	107	29	.....	.....	.....	.....
Pulp, % solids	85	78	70–75	74	70	73
Circulating-load ratio *h*	4	1.4	5	6 *cc*	6	5.5
Power consumed: Hp.	151	150 *e*	140	135	170	187
Per ton of balls	15.1	16.7	14.0	18.0	14.2	13.3
Steel consumption, lb. per ton of new feed: Balls	1.8	2.1	1.91	1.6	6 *cb*	2.8
Liners (or life days)	0.3 *w*	0.56 *z*	.....	.....	(8 mo.)	(10 mo.)
Grates (or life days)	(4,600 hr.)	.....	.....	.....	(8 to 9 mo.)	(10 mo.)
PERFORMANCE DATA						
Tons per hp-hr.: New feed	0.071	0.11	0.089	0.068	0.046 *by*	0.078
<65-m. produced	0.061	0.062	.....	.....	.....	.....
<200-m. produced	0.052	0.047	.....	.....	0.023 *bz*	.....

Plant (or ore *br*)	Walker Mine *y*	Hollinger *aa*	Sylvanite *ad*	Hollinger *aa*	Leached copper ore	Gold-silver quartz
SPECIFICATIONS OF MILL						
Size: Diam. × length, ft. *a*	7×7	7×7 1/2	7×10	7×15	7.7×6	7.7×6
Speed: R.p.m.	24	24.6	22	24.6	23.2	21
% of critical *b*	80	81	77	81	84	76
Balls: Weight, tons	13	18	25	36	14	11
% of mill volume	32	50	50	50	36	24
Diam. of renewals, in.	4	3	4, 3 1/2	3	3	5
Material *s*	*FS*	*FS*	*FS*	*FS*	*CI*	*CI*
Liner: Type	Shiplap	Smooth	Smooth *ae*	Smooth	Step	Step
Material *s*	*Mn*	*Mn*	.....	*Mn*	*Mn*	*Mn*
Grates: Type *bq*	.....	*ab*	*ag*	*ab*	Tan	Tan
Material *s*	*Cr*	*ab*	*Cr-Mo*	*ab*	*CAS*	*CAS*
Aperture, in.	1/4	3/8	3/8	3/8	5/16	3/8
Power: Installed, hp.	200	400	.....	400	.....	.....
OPERATING DATA						
Feed rate: Tons new feed per hr.	23.3	29.2	18.1–19.9 *af*	59.6	31.3	39.0
Tons new feed per hr. per ton of balls	1.8	3.0	1.5	3.0	2.2	3.5
Sizings: Test reference *c*	*15*	*16*	*17*	*18*	.....	.....
Feed: Limiting, in.	1 1/2	3/8	3/8	0.26	0.26	1 1/2
Product: *Mog*	28	35	48	48	35	8–10
Reduction ratios: Limiting sizes	65	23	31	22	16	19
80% sizes *g*	30	32	32	29	.....	.....
Pulp, % solids	78	81	82	80	72	80
Circulating-load ratio *h*	1.4	4.5	3–3.6	5.0	2.5	1
Power consumed: Hp.	185 *e*	231	292	390	237	225
Per ton of balls	14.2	12.8	11.7	10.8	16.9	20.4
Steel consumption, lb. per ton of new feed: Balls	2.1	1.2	.....	1.2	1.6	1.3
Liners (or life days)	0.56 *z*	*ac*	.....	*ac*	(380)	(7 to 8 mo.)
Grates (or life days)	.....	*ab*	(240)	*ab*	(325)	(7 to 8 mo.)
PERFORMANCE DATA						
Tons per hp-hr.: New feed	0.13	0.13	0.062–0.067	0.15	0.13	0.17
<65-m. produced	0.083	0.090	0.050 *e*	0.10	.....	.....
<200-m. produced	0.048	0.068	0.033 *e*	0.075	.....	.....

Table 33. Performance of grate ball mills (wet)—*Continued*

Plant (or ore *br*)	Gold-quartz	Idaho-Maryland	Mountain City	Tooele *aj*	Tooele *al*	Loreto *an*
SPECIFICATIONS OF MILL						
Size: Diam. × length, ft. *a*	7.7×6	7.7×6	7.7×6	7.7×6	7.7×6	7.7×6
Speed: R.p.m.	23	22.5	20		18.7	23.2
% of critical *b*	83	81	72		68	84
Balls: Weight, tons	12	15	14	11 *ak*	13.5	
% of mill volume	27	33	31	24	30	
Diam. of renewals, in.	4	5	4	3	3	5
Material *s*	*FS*	*FS*	*FS*	*CS*	*CI*	*FS aq*
Liner: Type	Step	Shiplap	Forbes			
Material *s*	*Mn*	*Cr*	*Cr-Ni-Mo*		*Mn*	*Mn*
Grates: Type *bq*	Tan	Tan	Tan			
Material *s*	*CAS*	*TS*	*Mn*		*TS*	*Cr*
Aperture, in.	7/16	1/4	7/16			
Power: Installed, hp.		225	250		200	225
OPERATING DATA						
Feed rate: Tons new feed per hr.	45.8	16.7	19.8	12.5 *ak*	20.9	27.5
Tons new feed per hr. per ton of balls	3.8	1.1	1.4	1.1	1.5	
Sizings: Test reference *c*		*19*	*ah*	*20*	*21*	*22*
Feed: Limiting, in.	1 1/2	0.26	1/2	1/2	1/2	1 1/2
Product: *Mog*	20	48	65 *al*	65	28	4
Reduction ratios: Limiting sizes	45	22	61	61	22	8
80% sizes *g*		3		21		13
Pulp, % solids	75	78	75	80	72–75	
Circulating-load ratio *h*	7	0.4	High	CC	CC	CC
Power consumed: Hp.	220	218 *e*	236			246
Per ton of balls	18.3	14.5	16.9			
Steel consumption, lb. per ton of new feed: Balls	0.8	1.5	2.4		2.3	1.45
Liners (or life days)	(8 mo.)	0.4	2.16		0.3 *am*	*ao*
Grates (or life days)	(9 mo.)	0.04	0.022			*ap*
PERFORMANCE DATA						
Tons per hp-hr.: New feed	0.21	0.077	0.084			0.11
<65-m. produced		0.029				0.035
<200-m. produced		0.018				0.022

Plant (or ore *br*)	Engels *ar*	Mt. Lyell	Leached copper ore	Copper ore	Wright-Hargreaves *au*	Copper ore
SPECIFICATIONS OF MILL						
Size: Diam. × length, ft. *a*	7.7×6	8×6	8.7×6	8.7×7	8.7×7 *az*	8.7×8
Speed: R.p.m.	21	21.5	20.7	20.2	18.5	19
% of critical *b*	76	78	79	77	71	73
Balls: Weight, tons	12.5	15	18	22	30	20
% of mill volume	27	33	36.3	33	50	35
Diam. of renewals, in.	5	2	3	4	3 1/2	3
Material *s*	*CS as*	*FS, CI*	*FS*	*FS*	*CS*	*FS*
Liner: Type		*WB*	Step	Step	Shiplap *ap. av*	Step
Material *s*		*Mn*	*Mn*	*Mn*	*Mn*	*Mn*
Grates: Type *bq*		Tan	Tan	Tan	Dish-pan *ax*	Tan
Material *s*		*Cr*	*CAS*	*CAS*		*CAS*
Aperture, in.		5/8	5/16	3/8	1×6 *ay*	5/16
Power: Installed, hp.	225	200			300	
OPERATING DATA						
Feed rate: Tons new feed per hr.	24.5 *at*	89.2	38.0	31.3	26.8	41.7
Tons new feed per hr. per ton of balls	2.0	5.9	2.1	1.4	0.86	2.1
Sizings: Test reference *c*	*23*	*24*			*25*	
Feed: Limiting, in.	1 1/4	0.093	3/8	1	3/8	1/2
Product: *Mog*	8	28	35	35	14	100
Reduction ratios: Limiting sizes	13	4	23	62	8	86
80% sizes *g*	37	2			17	
Pulp, % solids	83	75	72	73	70	76
Circulating-load ratio *h*	0.34	0.55	2.5	6	2.4	8 *ca*
Power consumed: Hp.	269	196	279	345	309	390
Per ton of balls	21.5	13	15.5	15.7	10.3	15.0
Steel consumption, lb. per ton of new feed: Balls	1.5	0.43	1.6	1.7	2.5	2
Liners (or life days)	0.18	0.32	(360)		0.22 *aw*	
Grates (or life days)		(441)	(360)		0.02	
PERFORMANCE DATA						
Tons per hp-hr.: New feed	0.091	0.45	0.14	0.091	0.087	0.11
<65-m. produced	0.049	0.078			0.052	
<200-m. produced	0.029	0.064			0.029	

Table 33. Performance of grate ball mills (wet)—*Continued*

Plant (or ore *br*)	Andes	Molybdenite ore	Molybdenite ore	Universal Atlas *bl*	Universal Atlas *bl*
SPECIFICATIONS OF MILL					
Size: Diam. × length, ft. *a*	8.7×9	9×7	9×8	9×8	9×8
Speed: R.p.m.	20.2	19	20	19	17
% of critical *b*	77	74	78	75	67
Balls: Weight, tons	22	30	29	.....	.....
% of mill volume	26	45	38	.....	.....
Diam. of renewals, in.	4 1/4	3 1/2	3 1/2	4	2
Material *s*	.....	*bj*	*bj*	*FS bl*	*FS*
Liner: Type	.....	Block	Block	.....	.....
Material *s*	*Mn bg*	*Cr-Mo*	*Cr-Mo*	.....	.....
Grates: Type *bq*	Tan	Tan	Tan	*bk*	*bk*
Material *s*	*Cr*	*CAS*	*CAS*	.....	.....
Aperture, in.	1/2	7/16	3/4	7/8	7/8
Power: Installed, hp.	400	.....	.....	350	350
OPERATING DATA					
Feed rate: Tons new feed per hr.	25.4	50	66.7	54	*bm*
Tons new feed per hr. per ton of balls	1.0	1.7	2.3	.....	.....
Sizings: Test reference *c*	*26*	.....	.....	*29*	*30*
Feed: Limiting, in.	1 1/4	3/8	3/8	1 1/4	0.046
Product: *Mog*	48	28	28	14	100
Reduction ratios: Limiting sizes	104	16	16	27	8
80% sizes *g*	75	.....	.....	14	7
Pulp, % solids	77–79	80	80	76	64
Circulating-load ratio *h*	1.4	4	6	2.0	2.46 *bn*
Power consumed: Hp.	409	335	450	290	305
Per ton of balls	18.6	11.2	15.5	.....	.....
Steel consumption, lb. per ton of new feed: Balls	.....	1	1	.....	.....
Liners (or life days)	0.18 *bg*	(360)	(360)	.....	.....
Grates (or life days)	0.034	(360)	(360)	.....	.....
PERFORMANCE DATA					
Tons per hp-hr.: New feed	0.062	0.15	0.15	0.13	0.13
<65-m. produced	0.052	.....	.....	.....	.....
<200-m. produced	0.033	.....	.....	0.043	0.062

Plant (or ore *br*)	Sunshine	Permanente *ba*	Permanente *ba*	Mt. Lyell	Morenci
SPECIFICATIONS OF MILL					
Size: Diam. × length, ft. *a*	9 1/3×7	9 1/2×10	9 1/2×10	10×7	10.2×10.4
Speed: R.p.m.	13	19	19	17.9	17.9
% of critical *b*	51	74	74	72	72
Balls: Weight, tons	27.5	38.5 *bc, bf*	38.5 *bd, bf*	32.6	45 *cc*
% of mill volume	41	40	40	44	38
Diam. of renewals, in.	4	4, 3 1/2	2 1/2, 2	5, 4	3, 2 1/2, 2 *cd*
Material *s*	*FS*	.....	.....	*FS*	*FS*
Liner: Type	.....	.....	.....	*WB*	.....
Material *s*	*Mn*	.....	.....	*Mn*	.....
Grates: Type *bq*	.....	.....	.....	Tan	.....
Material *s*	.....	.....	.....	*Cr*	.....
Aperture, in.	3/8	3/4	3/8	5/8	.....
Power: Installed, hp.	300	500	500	450	800
OPERATING DATA					
Feed rate: Tons new feed per hr.	19.8	90–150 *bb*	*be*	75	73–83
Tons new feed per hr. per ton of balls	0.48	2.3–3.8	.....	2.3	1.6–1.8
Sizings: Test reference *c*	*27*	.....	.....	*28*	.....
Feed: Limiting, in.	1 1/2	3/4	*be*	1 1/2	3/4 to 1 *ce*
Product: *Mog*	48	35–65 *bb*	150	10	65 *cf*
Reduction ratios: Limiting sizes	125	62	3	23	107
80% sizes *g*	140	.....	.....	40	.....
Pulp, % solids	80	75–80	70	80	75–80
Circulating-load ratio *h*	5.7	2.7–3.5	4.7–5.1	1.2	5 to 6 *ch*
Power consumed: Hp.	200	.....	.....	447	705 to 725 *cc*
Per ton of balls	7.3	.....	.....	13.3	15.9
Steel consumption, lb. per ton of new feed: Balls	1.7	0.75	0.75	0.7	*cg*
Liners (or life days)	0.24 *bh*	.....	.....	0.32	*cg*
Grates (or life days)	*bh*	.....	.....	(256)	*cg*
PERFORMANCE DATA					
Tons per hp-hr.: New feed	0.099	.....	.....	0.17	0.11
<65-m. produced	0.087	.....	.....	0.077	.....
<200-m. produced	0.059	.....	.....	0.063	0.069

a Inside new liners.
b With allowance for shell liner.
c Numbers refer to lines in Table 33*a*.
e Estimated.
k Ed. 1.
g Sec. 4, Art. 2.
h Art. 12. *CC* = closed circuit.
i 46 IMM 602.
j Specific gravity.

l 6 in. thick at crest of wave. Chilled cast iron at feed end with steel reinforcing bars cast in to prevent cracking as liners wear thin.

m Shell, 14 to 15 mo., 0.15 lb. per ton; feed end, 3 to 4 mo., 0.05 lb.

n Rolled chrome-steel bars with steel frame cast around; bolted Mn grates unsatisfactory on account of loosening.

o IC 6544.

p Closed circuit with a 3-mm. trommel.

q Screen analyses are for combined product of 1 @ 6×4 1/2-ft. mill and 4 @ 6×6-ft. mills in parallel.

r Average for 5 primary mills as per note *q*.

s See Table 47, Sec. 22.

t End liner, ribbed, Ni-Cr-Mo.

u Bul. 34[1] CIMM 119.

v IC 6550.

w Mn liner life: 3,939 hr., 42,000 tons of ore; Cr-Mo liner: 4,304 hr., 46,000 tons of ore.

x IC 6605.

y IC 6555.

z Shell, 3,200 hr., 0.273 lb. per ton; feed-end, 4,300 hr., 0.176 lb.; grate, 4,200 hr., 0.176 lb.

aa 40 CIMM 85. See also Art. 4.

ab See Fig. 55.

ac See Art. 5.

ad 41 CIMM 286.

ae Circumferentially grooved.

af Varies according to hardness of ore.

ag Cast, 3 1/2 in. thick, tangential slots flare to 5/8 in. Cleaning at 50-da. intervals requires about 3 1/2 hr.

ah All <1/2-in.; 30% <10-m.

ai 69% <200.

aj IC 6759. Oxide ore.

ak Underloaded.

al IC 6758. Sulphide ore.

am Including grate.

an 112 A 727.

ao Weight shell liners new, 21,300 lb., life 160 da., scrap loss, 36%; feed-end liners, Mn, new weight 4,930 lb., life 190 da.

ap Weight, 3,440 lb.; life, 180 da.

aq Tempered to minimize breakage.

ar IC 6550.

as Forged steel and cast steel compared over a long period; cast steel cheaper.

at 28 t.p.h. if operated open-circuit, but then 2 @ 6×12-ft. secondary mills required instead of one with closed-circuit primary operation.

au 140 *# 4 J 37.*

av Rounded nose; square nose gave too much lift.

aw Feed-throat and feed-end, 200 da.; discharge-end, 250 da.; shell, 365 da. Complete set weigbs 43,100 lb. new.

ax Diam., 4 ft.; weight, 1,270 lb.

ay Total open area, 454 sq. in.

az The large mill is more efficient than two small mills of the same combined volume, which it replaced.

ba A TP 1359. Cement rock.

bb 90 tons when product desired is 75% <200-m.; 150 tons when 50% <200 satisfactory. For each per cent. reduction in $CaCO_3$ (and corresponding increase in percentage SiO_2) in feed, capacity falls approximately 2%. Can increase capacity by decreasing feed size.

bc New charge: 51% @ 4-in., 40% @ 3-in., 9% @ 2 1/2-in.

bd New charge: 2-in., 3.9%; 1 1/2, 18.1; 1 1/4, 26.0, 1, 26.0; 3/4, 26.0.

be Bowl sands from primary. See preceding column. One secondary to each primary. If feed is 90% $CaCO_3$ and primary product >48-m., the two secondaries will grind 150 t.p.h. to 96% <200-m.

bf Dumped every 4 mo. and charge brought back to original size composition.

bg Also nickel-bearing cast iron, with which consumption is 0.32 lb. per ton; scrap returned to foundry.

bh Liners and grates.

bi 134 A 344.

bj Forged chrome-molybdenum steel.

bk 1 1/2 in. thick, taper 1/16 in. each side. Slots radial extending inward 13 in. from grate periphery to a blank center plate.

bl Heat-treated to 500 Brinell.

bm 187 tons total classifier sands per hr.; actual new sand feed unknown; may be estimated roughly from primary-classifier overflow (screen test *29*, Table 33*a*), which comprises feed to the secondary circuit, and overflow of bowl classifier, which is in circuit with this secondary mill.

bn Based on classifier overflow; actually larger than this against new mill feed.

bo Hard. Jig and table tailing, deslimed.

bp Appreciable amounts of pyrite.
bq Rad., radial slot; Tan, tangential slot; Sl, slotted, direction not known.
br Source of data for all columns headed only by designation of an ore is Mine & Smelter Supply Co. (*PC*).

bs Mesh:	48	65	100	200	<200
% cum.	1.0	15.1	39.5	69.5	30.5

bt 21% >65-m.; 53% <200-m.
bu Primary jaw crusher product.

bv Mesh:	150	200	<200
Cum. %	0.7	3.8	96.2

bw Very hard.
bx A secondary mill of the same specifications, in closed circuit with a bowl classifier, reduces the product further to 3.6% >150-m., 85% <200-m.
by One mill to 48 *mog*. See *bx*.
bz For two mills in series; see *bx*.

ca 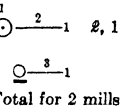 *2*, 1 @ 16×20-ft. quadruplex; *3*, 1 @ 18-ft. bowl.

cb Total for 2 mills in series to 100 *mog* (see note *bx*).
cc With new liners.
cd New charge.
ce Varies according to setting of the reduction crushers.
cf About 70% <200-m.
cg New operation; not available.
ch 2 @ 54-in. duplex Akins classifiers per mill.
ci See also Gold Road, 5-82.

Charge volumes reported in Table 33 are definitely lower than are to be expected in grate mills, having the effect of lowering capacities and raising power consumption. The explanation probably lies in the fact that many of the data were reported during the "Roosevelt boom," when plants were running below capacity and ball charges were cut down to save power and to prevent overgrinding.

Power consumption for mills of different diameters at different charge volumes may be estimated from Fig. 60. Approximate relationships between power consumption and production are given in Fig. 61. In general, power consumption per ton of balls at 70 to 75% of critical speed lies between 10 and 15 hp., with higher figures corresponding to underloads of charge and/or rough liners, while lower figures are for smooth liners and/or relatively low speeds.

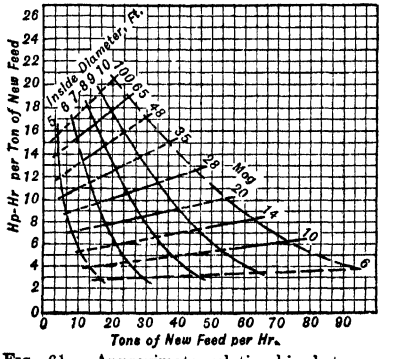

FIG. 61. Approximate relationship between power consumption, feed rate, and *mog* for grate ball mills.

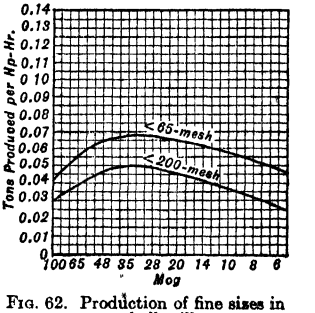

FIG. 62. Production of fine sizes in grate ball mills.

Efficiency. Tons per hp-hr., disregarding all other variables, average close to 0.13 for reduction to 35 *mog* and coarser and about 0.07 for 48 and 65 *mog*. Three markedly high figures in Table 33, corresponding to low reduction ratios, are excluded from these averages. Production of <65-m. and <200-m. material when grinding to different *mogs* is averaged in the graphs of Fig. 62. Spreads of ±50% of the graph averages are to be expected.

Speeds in Table 33 range from 62 to 87% of critical, with the greatest frequency apparently in the range of 75 to 79%, but actually probably in the range of 80 to 84%, since the percentages of critical were calculated on the basis of new liners of average thickness.

Table 33*a*. Sizing analyses for grate ball mills, Table 33

Size	Mesh					3	4	6	8	10	14	20	28	35	48	65	100	150	200	<200
	Inches	1	3/4	1/2	3/8	0.263	0.185	0.131	0.093	0.065	0.046	0.033	0.023	0.016	0.012	0.0082	0.0058	0.0041	0.0029	.....
Reference No.	Material *a*	Cumulative per cent. weight retained																		
1	NF	0.2	2.1	.....	41.4	.....	58.7	64.7	.....	73.2	.....	79.6	.....	84.2	.....	87.5	89.3	90.6	91.5	8.5
	CS						4.3	7.2	.....	14.7	.....	30.4	.....	60.8	.....	82.4	87.8	90.1	91.3	8.7
	CO															13.4	26.1	35.5	42.0	58.0
2	CF											4.0	9.4	16.4	24.0	34.0	54.0	80.0	92.0	8.0
	MP												0.4	0.9	3.5	11.0	24.0	49.0	66.0	34.0
	CO																2.6	21.7	41.5	58.5
3	NF	1.7	6.3	33.1	.....	.....	60.0	69.5	.....	76.9	82.3	.....	87.9	90.0	91.9	93.6	95.1	96.3	97.3	2.7
	CF	1.1	4.2	22.1	.....	.....	40.0	46.3	.....	69.8	81.7	.....	90.0	92.2	93.8	95.1	96.3	97.2	98.0	2.0
	MP									16.5	30.0	.....	50.0	59.0	66.5	73.0	79.0	83.0	86.2	13.8
	CO										2.7	....	19.7	31.2	42.5	53.5	66.5	74.2	79.1	20.9
4	NF			1.5	8.9	.....	29.0	59.2	67.1	73.4	.....	.....	.....	.....	.....	.....	.....	.....	.....	26.6 *c*
	MP				0.1	4.5	10.8	15.6	22.1	31.6	38.6	46.3	54.0	59.5	64.5	70.3	73.7	76.3	78.3	21.7
	>S *b*				0.3	8.2	16.0	29.5	44.4	65.1	72.2	77.6	81.0	84.2	87.5	89.6	90.2	91.7	95.0	5.0
	<S *b*								0.6	7.6	18.2	29.6	39.0	47.2	54.8	63.4	68.4	71.7	74.7	25.3
	CO											1.9	11.5	21.8	31.6	40.0	47.2	54.0	61.5	38.5
5	NF					7	.....	.....	.....	.....	.....	.....	.....	77.2	79.4	83.7	85.9	87.7	89.9	10.1
	CO													4.0	13.0	27.4	37.8	47.2	52.6	47.4
6	CO *d*															7.0	19.3	30.1	38.0	62.0
	CS						1.3	2.7	.....	6.5	.....	15.6	.....	41.9	.....	75.7	85.4	88.8	90.4	9.6
7	NF					17.2	36.2	51.0	62.0	69.8	75.6	80.8	85.0	88.5	91.1	93.3	95.3	96.7	97.7	2.3
	CF						13.5	20.1	.....	.....	.....	.....	.....	.....	.....	92.6	.....	.....	97.0	3.0
	MP					1.4	3.5	6.1	8.9	12.6	18.8	29.0	43.3	58.5	68.5	76.0	81.5	85.3	88.1	11.9
	CO.											0.1	1.7	8.3	20.1	34.0	46.5	56.0	64.0	36.0
8	CF												1.0	6.0	16.9	36.6	65.1	87.4	94.6	5.4
	MP												0.3	2.5	9.3	24.1	49.8	72.3	82.8	17.2
9	NF			11.0	.....	57.5	.....	.....	.....	84.3	.....	.....	.....	.....	94.3	95.3	.....	.....	97.0	3.0
	MP					0.5	.....	.....	.....	3.7	.....	.....	.....	.....	41.9	57.7	69.6	78.1	83.5	16.5
	CS					0.2	.....	.....	.....	3.4	.....	.....	.....	.....	47.5	66.3	78.8	87.0	91.7	8.3
	CO															3.8	11.0	22.2	32.9	67.1
10	NF									0.1	0.4	.....	4.8	11.8	23.5	43.2	61.2	77.3	85.1	14.9
	CF										0.4	.....	4.8	11.6	23.4	42.7	61.3	78.3	86.0	14.0
	MP										0.2	.....	1.1	3.9	9.9	24.9	42.9	60.2	70.1	29.9
	CO												0.5	2.6	7.8	23.7	40.7	58.2	67.9	32.1

11	NF									5.4	17.8	36.5	58.7	78.1	86.8	91.9	94.8	96.3	96.9	3.1
	MP									0.1	0.6	1.9	5.2	10.1	18.0	27.9	40.3	51.6	56.7	43.3
12	NF								3.7	8.0	14.2	25.2	35.4	48.7	60.9	70.1	80.3	83.1	89.4	10.6
	MP								0.2	0.4	0.9	1.7	3.8	9.0	19.5	34.5	53.4	61.2	77.2	22.8
	CS								0.2	0.5	1.1	2.2	5.0	11.9	25.7	44.8	67.4	76.0	90.8	9.2
	CO														0.1	2.0	9.3	14.7	34.6	65.4
13	NF	6.6	.....	40.9	.....	62.0	.....	.....	.....	72.5	.....	77.4	.....	83.2	.....	87.8	.....	91.5	92.6	7.4
	MP														17.2	32.5	45.7	61.4	73.2	26.8
	CS														20.0	38.1	51.8	70.3	83.8	16.2
	CO															2.2	5.8	11.4	19.2	80.8
14	NF	5.4	.....	46.7	.....	.....	69.7	.....	79.2	.....	.....	.....	88.2	.....	90.0	92.9	93.4	95.9	98.8	1.2
	MP						2.6	.....	7.3	.....	.....	.....	37.3	.....	51.3	59.4	66.2	72.2	78.3	21.7
	CS			1.4	.....	.....	9.5	.....	18.0	.....	.....	.....	61.5	.....	76.3	82.7	86.0	89.8	93.5	6.5
	CO												2.5	.....	13.7	36.1	38.6	54.1	56.4	43.6
15	NF	5.4	.....	46.7	.....	.....	69.7	.....	79.2	.....	.....	.....	88.2	.....	90.0	92.9	93.4	95.9	92.6	7.4
	MP			0.9	.....	.....	1.2	.....	3.7	.....	.....	.....	27.5	.....	41.8	53.2	60.2	70.7	77.2	22.8
	CS						5.6	.....	11.6	.....	.....	.....	58.1	.....	73.5	81.9	85.2	89.4	92.7	7.3
	CO												2.2	.....	12.7	27.3	33.5	42.5	54.7	45.3
16	NF				0.04	3.7	18.1	39.8	50.8	58.5	65.2	69.8	73.7	77.3	78.5	80.0	81.6	83.2	84.4	15.6
	MP					0.4	2.3	7.0	10.4	14.4	19.9	26.7	36.3	49.7	57.7	66.1	72.1	75.9	77.8	22.2
	CO													0.8	3.2	10.4	19.1	27.3	32.3	67.7
17	NF					4.5	.....	38.0	.....	58.4	.....	71.9	.....	.....	84.4	.....	.....	.....	.....	15.6 c
	CO														2.3	9.2	23.3	34.8	43.6	56.4
18	NF					0.8	5.2	29.4	42.7	52.4	60.1	65.6	70.3	74.4	76.2	78.1	80.1	81.8	83.3	16.7
	MP					0.1	0.6	3.6	7.0	11.4	17.0	24.2	34.5	49.1	60.7	68.4	74.5	77.9	80.2	19.8
	CS						1.0	4.4	8.3	13.0	18.8	27.2	39.8	57.8	70.9	78.3	83.7	86.1	87.4	12.6
	CO													0.1	2.1	9.5	18.7	27.3	33.5	66.5
19	NF					0.5	.....	.....	.....	4.4	.....	8.9	.....	22.4	31.2	43.0	52.7	60.3	65.6	34.4
	CF					0.6	.....	.....	.....	5.9	.....	11.6	.....	29.1	41.0	53.4	62.5	68.9	72.5	27.5
	MP					0.3	.....	.....	.....	2.7	.....	5.1	.....	12.9	18.3	25.7	38.4	47.4	56.0	44.0
	CO															4.8	19.6	30.8	42.8	57.2
20	NF			0.6	5.5	15.1	26.9	36.9	45.9	50.4	50.5	50.6	66.3	70.2	73.7	76.7	80.5	83.0	86.0	14.0
	CO															1.6	8.8	17.0	27.2	72.8
21	NF														75.3	.....	81.3	.....	86.1	13.9
	MP														30.2	.....	49.9	.....	63.8	36.2
	CS														61.0	.....	84.7	.....	92.3	7.7
	CO														12.7	.....	33.1	.....	48.8	51.2
22	NF	7.4	30.9	54.9	70.3	78.0	84.2	87.6	90.0	.....	92.9	.....	94.9	95.2	95.9	96.4	97.0	97.6	97.9	2.1
	CO					0.4	1.8	4.2	8.3	.....	27.7	.....	47.3	53.8	60.6	65.0	70.5	75.2	78.2	21.8

Table 33*a*. Sizing analyses for grate ball mills, Table 33—*Continued*

Size	Mesh					3	4	6	8	10	14	20	28	35	48	65	100	150	200	<200
	Inches	1	3/4	1/2	3/8	0.263	0.185	0.131	0.093	0.065	0.046	0.033	0.023	0.016	0.012	0.0082	0.0058	0.0041	0.0029	.....
Reference No.	Material *a*	Cumulative per cent. weight																		
23	NF	1.8	21.2	39.5	56.1	65.5	71.5	75.7	79.2	83.2	85.1	86.6	87.6	88.8	89.8	90.7	92.0	92.9	95.0	5.0
	MP								2.4	5.4	9.8	17.8	26.8	33.8	40.7	47.3	56.8	60.4	71.6	29.4
	CS								3.7	8.9	11.9	27.0	52.5	60.8	69.4	76.7	85.2	87.5	92.4	7.6
	CO *e*								2.0	4.4	9.2	14.8	18.1	24.4	30.7	37.0	46.5	50.5	63.6	36.4
24	NF								0.5	1.7	4.7	.....	15.5	23.9	36.2	54.9	70.4	82.9	88.9	11.1
	CF								0.4	1.5	4.3	.....	15.7	24.5	36.5	55.0	70.2	83.1	89.3	10.7
	MP									0.2	0.9	.....	6.3	13.1	24.3	41.4	57.2	70.2	79.0	21.0
	CO												1.6	7.1	17.7	35.3	52.2	66.6	74.5	25.5
25	NF					3.2	.....	44.6	57.6	66.3	73.3	78.5	82.8	85.9	88.4	90.5	92.3	93.5	94.7	5.3
	CF					0.9	.....	15.6	21.7	27.2	33.6	41.3	51.7	62.5	72.2	81.6	88.3	91.8	94.1	5.9
	MP							2.3	4.4	7.5	11.8	18.7	29.0	40.6	52.3	64.1	73.5	79.2	83.7	16.3
	CO										1.2	2.5	6.1	12.0	19.9	30.7	42.3	51.5	60.8	39.2
26	NF	1.1	6.8	19.5	.....	.....	.....	.....	74.8	.....	80.8	.....	83.9	.....	84.8	90.0	94.0	.....	98.0	2.0
	CF	0.4	2.8	8.1	.....	.....	.....	.....	35.5	.....	41.8	.....	50.0	.....	72.3	84.8	93.0	.....	96.8	3.2
	MP								4.4	.....	8.1	.....	14.7	.....	36.3	49.3	63.4	.....	74.4	25.6
	CO														0.4	6.4	24.4	.....	44.7	55.3
27	NF	5.0	.....	32.6	.....	67.5	.....	.....	.....	84.7	.....	90.1	.....	92.2	.....	94.1	94.9	.....	96.0	4.0
	CF	0.7	.....	5.0	.....	18.1	.....	.....	.....	25.2	.....	33.8	.....	50.4	.....	75.8	83.6	.....	90.8	9.2
	MP					8.0	.....	.....	.....	12.5	.....	20.3	.....	36.5	.....	62.7	71.8	.....	81.9	18.1
	CO															6.0	15.8	.....	36.4	63.6
28	NF	10.7 *f*	29.4	44.6	.....	63.5	.....	.....	76.5	80.1	82.5	.....	85.1	87.7	89.2	90.9	92.1	93.1	93.8	6.2
	CF	4.7	13.0	21.5	.....	34.1	.....	.....	50.4	55.8	62.1	.....	75.6	79.3	83.1	86.1	88.0	89.1	90.0	10.0
	MP			1.6	.....	6.2	.....	.....	17.5	23.7	31.3	.....	48.9	56.9	63.6	69.9	73.9	77.2	79.6	20.4
	CO								0.4	1.4	3.9	.....	18.3	28.6	37.1	45.8	52.4	58.4	62.6	37.4
29	NF	2.6	5.4	10.7	23.0	.....	45.7	48.3	62.5	.....	74.0	.....	84.5	.....	89.0	.....	92.2	.....	94.0	6.0
	MP		0.3	3.7	6.8	.....	13.2	14.5	21.9	.....	37.2	.....	61.2	.....	75.0	.....	81.6	.....	85.4	14.6
	CS		1.2	3.5	7.1	.....	16.1	18.2	32.1	.....	58.7	.....	86.5	.....	94.0	.....	96.2	.....	97.0	3.0
	CO										1.6	.....	18.6	.....	37.4	.....	52.1	.....	61.0	39.0
30	CS										0.4	.....	7.4	.....	26.1	.....	64.0	.....	92.6	7.4
	MP												2.1	.....	15.1	.....	48.8	.....	78.9	21.1
	CO																		13.0	87.0

a ***CF***, composite feed; ***CO***, classifier overflow; ***CS***, classifier sands; ***MP***, mill discharge; ***NF***, new feed.
b Screen oversize and undersize. *c* Through last screen. *d* Feed as in Ref. No. 1. *e* Calculated from MP and CS. *f* Round hole.

Table 34. Performance of wet tube mills

Plant	Shenandoah Dives	McIntyre Porcupine	McIntyre Porcupine	McIntyre Porcupine *k*	Wright-Hargreaves *m*	McIntyre Porcupine *u*	Parral	Sylvanite *l*
SPECIFICATIONS OF MILL								
Size: Diam. × length, ft. *a*	4×10	5×16	5×16	5×16	5×16	5×16	5×16	5×16.8
Type *h*	Ov	Ov	Ov	Ov	Ov	Ov	Ov	Gr
Speed: R.p.m.	24	29	30	30	.....	29	31.7	30.1
% of critical *b*	60	80	83	83	.....	84	90	83
Charge: Weight, tons		19	5	5	.....	15	12.5	19
% of mill volume		52	41	41	.....	35	34	45
Diam. of renewals, in.	1 1/2	2, 2 1/2	4	4	.....	2	3	1 1/4
Material *ae*	*FS*	*FS, CI*	*DF*	*DF*	.....	*FS*	*CI*	*FS*
Liner: Type	Wave	Wave	El Oro	El Oro	Grooved	Sheet	Wave	Pocket
Material	*Mn*	*CI*	*CI*	*CI*	*CI*	Rubber	*Mn*	*CI*
Power: Installed, hp.	50	150	100	100	.....	150	150	175
OPERATING DATA								
Feed rate: Tons new feed per hr.	1.7	20	4.6	8.3	7.1	9.6	17.5	7.3
Tons new feed per hr. per ton of charge		1.05	0.92	1.7	.....	0.63	1.4	0.38
Sizings: Test reference *c*	*1*	*2*	*3*	*4*	.....	.....	*10*	*l*
Feed, limiting mesh, in.	0.016	0.263	0.131	3/8	0.065	0.0082	0.093	0.023
Product, *mog*	150	48	48	28	200	150 *w*	48	150
Reduction ratios: Limiting	4	22	11	16	22	2	8	6
80% *d*	.....	20	7	6	.....	.....	4	.....
Pulp, % solids	70–75	72	72	72	.....	60	69	75
Circulating-load ratio *f*	*g*	1.0	2.2	.....	.....	*v*	1.4	2.1
Power consumed: Hp.	35	150	65	65	170	150	150	197
Hp. per ton of charge		7.9	13	13	.....	10	12	10.3
Tumbling charge, consumption, lb. per ton new feed	0.2	*j*	4	.....	.....	0.63	2.1	2.6 *aa*
Liners, consumption, lb. per ton new feed (or life, days)		0.18	0.26	.....	*n*	(>5 yr.)	0.25 *ab*	.....
PERFORMANCE RATINGS								
Tons per hp-hr.: New feed	0.049	0.13	0.071	0.13	0.042	0.064	0.12	0.037
<65-m. produced	.....	0.094	.....	.....	.....	.....	0.071	.....
<100-m. produced	.....	0.078	0.038	0.051	.....	.....	0.080	.....
<200-m. produced	0.021	0.057	0.031	0.020	.....	.....	0.065	.....

Plant	Sylvanite *l*	Sylvanite *l*	Tonopah Belmont	Morro Velho *o*	Mexican Gold Mill	Howes Cave *t*	Kelowna	Kelowna
SPECIFICATIONS OF MILL								
Size: Diam. × length, ft. *a*	5×16.8	5×17.1	5×18	5×20	5×20	5×21	5×22	5×22
Type *h*	Ov	Gr	Ov	Ov *q*	Ov	Ov	Gr *x*	Gr *y*
Speed: R.p.m.	30.6	30.6	28	22	28	25	27	20
% of critical *b*	85	85	77	61	77	67	74	55
Charge: Weight, tons	19	19	10.5 *ad*	6	10 *ad*	6.1	14 *ad*	14 *ad*
% of mill volume	45	45	.....	39	64 *ad*	47	.....	.....
Diam. of renewals, in.	1 1/4	1 1/4	4	.....	3–7 *s*	.....	>4	>4
Material *ae*	*FS*	*FS*	*DF*	*HO*	*HO*	*DF*	*HO*	*HO*
Liner: Type	Pocket	Wave	Ribbed	*p*	El Oro	Brick	Tonopah	Tonopah
Material	*CI*	*Mn*	*CI*	*p*	*CI*	Silex	*CI*	*CI*
Power: Installed, hp.	175	150	50	75	65	75	75	75
OPERATING DATA								
Feed rate: Tons new feed per hr.	7.5	7.6	2.9	4.2	5.2	4.7	3.5	5.2
Tons new feed per hr. per ton of charge	0.39	0.40	0.28	0.70	0.52	0.77	0.25	0.37
Sizings: Test reference *c*	*l*	*l*	*5*	*6*	*7*	.....	*8*	*9*
Feed, limiting mesh, in.	0.033	0.023	0.131	0.012	0.065	0.046	0.185	0.016
Product, *mog*	150	150	35	65	48	100	65	200
Reduction ratios: Limiting	8	6	8	1.4	5	8	22	6
80% *d*	.....	.....	4	1.4	2	.....	28	.....
Pulp, % solids	75	75	62–65	.....	60–65	68	80	78
Circulating-load ratio *f*	1.0	1.0	0.86	*OC*	0.6–1.2	*OC*	*v*	*v*
Power consumed: Hp.	173	175	58	42 *e*	88	43 *e*	75	75
Hp. per ton of charge	9.1	9.2	5.5	7.0 *e*	8.8	7.0 *e*	5.4	5.4
Tumbling charge, consumption, lb. per ton new feed	2.6 *aa*	2.6 *aa*	4.2	60	70	1.0	83	56
Liners, consumption, lb. per ton new feed (or life, days)	.....	.....	0.49	*p*	0.70	.....	0.5	0.4
PERFORMANCE RATINGS								
Tons per hp-hr.: New feed	0.043	0.041	0.050	0.10	0.059	0.11	0.047	0.069
<65-m. produced	.....	.....	0.015	.....	.....	.....	0.032	.....
<100-m. produced	.....	.....	0.015	0.015	.....	.....	.....	.....
<200-m. produced	*ac*	*ac*	0.012	0.030	0.037	.....	0.029	0.055

a Nominal.
b With allowance for shell liner.
c Numbers refer to lines in Table 34*a*.
d Sec. 4, Art. 2.
e Estimated.
f Art. 12.
g Closed by cone; tonnage not reported.
h Gr = grate; Ov = overflow.
i *41 CIMM 302.*
j 2 1/2-in. cast-iron, 0.48; 2-in. forged-steel, 1.22 lb.
k *20 CMI 98.*
l Mill discharge, 76% <200-m.; classifier overflow, 89% <325-m.
m *140 ¾ 4 J 39.*
n Average life, 654 da.; scrap loss, 13%; consumption about 0.25 lb. per ton.
o *42 IMM 207.*
p 40-lb. steel rail laid longitudinally with flanges covering joints in 1/2×4 1/2-in. plate grouted in. Rail held in by cast-iron chocks bolted through plates and shell. Life of rails 10 mo.; plates, 30 mo.
q Use of grates and concurrent head-end feed of pebble rock increased percentage of <200-m. in product to 78.
s Weight 7 to 16 lb. per piece.
t *IC 6553.* Limestone.
u *112 A 638, Q.*
v Circuit closed by classifier.
w 80% <325-m.
x 3/8-in. rd. holes, Mn; life 100 da.
y As *x*, but life 140 da.
aa Averages for 8 primary and 5 secondary mills.
ab 36% scrap included.
ac In a test run in which these mills were working in parallel on the same feed, the grate mill (open-end) produced 4.3 tons <200-m. per hr. from 7.6 tons of feed and the overflow mill produced 3.9 tons from 7.3 tons, corresponding to 0.025 and 0.020 ton per hp-hr. respectively (*41 CIMM 311*).
ad Apparently erroneous reports.
ae DF, Danish flint; HO, hard ore; for others see Table 47, Sec. 22.

Pulp density ranges from 70 to 85%, the higher figures corresponding to the coarser feeds and the greatest number of cases being in the 75-to-80 range. See also Art. 16.

Attendance. See Art. 18.

Lost time should not exceed 1%, to cover time for relining, except that if feed is too thick or the ore contains much wood, the grates will tend to blind and further time will be lost in more or less frequent cleaning. At SYLVANITE periodic (50-day) cleaning requires 3 1/2 hr.

Lubrication. See Art. 19.

Costs. See Art. 20.

Use. For discussion of grate-type *vs.* overflow-type mills see Art. 3.

Williamson mill has the end liners, or head-end liner and a grate, so conformed as to protrude three blunt plow-shaped wedges into the mill volume at each end. The wedge ridges are flush with the end at the trunnion rim, incline about 40 or 45° inward, and extend to the shell. The wedge angle is about 90°, and the leading face is so set, in effect, as to force a shovel under the end of the load at an angle as the mill revolves. The ridges at both ends lie in the same radial planes of the cylinder, so that the balls are poured out as through a converging shovel three times per revolution. The result is to add longitudinal travel to the load and to decrease the tendency for large balls to segregate against the ends. The speed recommended is lower than that for the usual cylindrical mill of the same diameter (*87 A 76*) owing to the increase in charge activity gained through the end conformation. For performance see the MIAMI flowsheet, Sec. 2, Fig. 22.

11. TUBE MILLS

Definition of this apparatus has never been precise. Modern practice tends to apply and confine the name to cylindrical mills with a length-diameter ratio greater than 2. The tumbling charge is usually balls or pebbles or a mixture thereof, but at many plants lumps of ore are substituted for pebbles, and, in a few, metal bodies such as punchings, small steel scrap, and the like are used.

Tube mills were the forerunners of center-discharge ball mills. They were adapted from cement practice into cyanide practice, and from cyaniding were taken over into concentration shortly before the adoption of flotation. They are used for finer grinding than ball mills. This end is accomplished by increasing length. Being used on finer feeds, diameter is reduced and lighter grinding media may be used. The STANDARD TUBE MILL, so-called because of its substantially uniform adoption in South African cyanide practice, is 5-ft. 6-in. diameter by 22-ft. length inside the shell. The modern development of the tube mill has been toward a shorter mill of somewhat greater diameter. This is a logical development of the more perfect methods of classification that have been developed. Originally it was necessary to finish the grinding in one passage through the mill. When this was done, great length was necessary, notwithstanding that the great bulk of the grinding was done in the first few feet of the mill. (See Fig. 9.)

Table 34*a*. Sizing tests for tube mills, Table 34

Size	Mesh....					3	4	6	8	10	14	20	28	35	48	65	100	150	200	325	< Last
	Inches...	1	3/4	1/2	3/8	0.263	0.185	0.131	0.093	0.065	0.046	0.033	0.023	0.016	0.012	0.0082	0.0058	0.0041	0.0029		screen
Reference No.	Material *a*	Cumulative per cent. retained																			
1	NF														2.0	.....	19.0	.....	45.0	.....	55.0
	CO																		3.0	13.0	87.0
2	NF						1.7	18.6	34.7	47.3	55.6	62.6	68.5	73.8	78.2	81.0	83.4	85.1	86.9	.....	13.1
	CF							10.2	19.2	26.6	32.2	37.5	44.6	54.5	67.2	77.1	83.5	86.5	88.8	.....	11.2
	MP							0.6	1.6	2.6	3.9	5.5	9.1	15.9	28.0	39.0	51.9	58.4	65.8	.....	34.2
	CO														2.2	9.1	23.0	34.5	43.1	.....	56.9
3	NF									4.0	13.5	.....	.....	39.4	45.0	.....	71.2	82.3	91.3	.....	8.7
	CO														2.2	.....	17.6	42.6	47.6	.....	52.4
4	NF						7.3	.....	12.5	19.0	30.6	.....	.....	47.0	59.9	.....	64.3	82.3	93.5	.....	6.5
	CO													5.6	17.6	.....	24.7	46.8	77.9	.....	22.1
5	NF									5.4	10.6	15.9	21.8	26.7	33.2	41.3	61.3	85.7	93.5	.....	6.5
	MP													1.0	4.1	10.6	30.6	59.2	71.9	.....	28.1
6	NF															2.2	21.2	.....	66.0	.....	34.0
	MP															0.2	6.2	.....	35.6	.....	64.4
7	NF									0.1	0.5	1.4	3.0	9.3	20.1	45.3	77.4	89.9	94.7	.....	5.3
	MP											0.3	0.5	2.2	11.9	31.1	59.0	73.7	83.6	.....	16.4
	CO														0.5	.....	.....	.....	31.8	.....	68.2
8	NF						0.4	.....	.....	20.3	29.3	.....	.....	.....	.....	70.0	.....	76.8	.....	.....	23.2
	CO															1.0	.....	10.8	14.8	29.0	71.0
9	CF															6.0	.....	35.6	57.4	80.8	19.2
	MP															1.0	.....	6.0	8.3	23.8	76.2
	CO																		1.5	11.0	89.0
10	NF									1.3	.....	.....	9.0	.....	32.9	61.9	79.0	89.6	93.4	.....	6.6
	CO															2.7	12.3	27.7	39.5	.....	60.5

a See p. 90.

Construction. SHELL is usually plate and heads cast. LININGS are plate, with or without lifters, or one of the many forms adapted to pick up and hold a part of the tumbling load. GRATES are common; aperture depends on grinding medium; for pebbles it is usually 1 to 1 1/2 in., for balls 3/16 to 1/4 in. inside, except that for very small balls (3/4-in. replacement) smaller apertures (3/32 to 1/8-in.) must be used to prevent excessive rejection. FEEDERS and arrangements of the discharge end are similar to those used with ball mills except that where rock is used as the tumbling medium special feed arrangements are used to handle the relatively large tonnages necessary and a trommel is often fitted to the discharge end to separate out the rock fragments which are crowded out. DRIVES are the same as for ball mills. For details see Art. 4. For setting instructions see Labbe (*101 J 777*).

Sizes most used are 5×16-, 5×22-, 6×22-, 7×24- and 8×26-ft.

Performance data are presented in Table 34. A summary of Rand performances is given in Tables 35 and 36 and in the following paragraph. See also the LAKE SHORE paper (*LS*).

Table 35. Performances of Rand tube mills

Plant	Number of mills	Size of mills, ft.	Tumbling load	Running time, %	Tons <100-m. per mill per 24 hr.	Kw-hr. per ton <100-m. produced	Cost, cents per ton <100-m. produced *c*
City Deep.....	13	5 1/2×22	Pebble *b*	91.1	160	18.9	19
Consolidated Main Reef...	12	5 1/2×22	Composite *a*	92.9	194	16.7	27
	1	5 ×22					
	3	6 1/2×20					
Crown Mines A	11	5 1/2×22	Composite *a*	96.7	198	14.4	19
	1	5 1/3×21					
Crown Mines B	6	5 1/2×22	Composite *a*	96.7	193	15.8	22
Crown Mines C	9	5 1/2×22	Composite *a*	98.3	166	17.8	20
	1	5 1/3×20 3/4					
	1	5 1/2×21					
	1	5 1/2×16 1/2					
Durban-Roodeport Deep....	7	5 1/2×22	Pebble	93.6	151	18.6	24
East Rand Proprietary East	11	5 1/2×22	Composite *a*	86.2	168	17.0	24
	2	5 ×22					
East Rand Proprietary West	11	5 1/2×22	Composite *a*	95.4	173	18.3	24
Geldenhuis Deep	7	5 1/2×22	Pebble	98.3	137	15.7	23
Modderfontein B	9	5 1/2×22	Composite *a*	98.9	181	17.6	23
	1	6 ×20					
Modderfontein East	12	6 1/2×20	Composite *a*	96.7	271	16.7	30
	2	5 1/2×15					
New Modderfontein South	8	6 ×20 1/2	Composite *a*	98.3	200	18.6	24
	4	5 1/2×22					
New Modderfontein North	8	5 1/2×22	Composite *a*	97.5	180	17.5	23
Nourse.....	7	5 1/2×22	Composite *a*	97.5	177	15.8	26
Rose Deep.....	4	5 1/2×21	Pebble	97.1	146	19.1	29
	1	5 1/3×20					
	1	5 ×21					
	1	5 1/2×22					

a Mine-rock pebbles and steel balls or steel scrap.
b Selected mine rock.
c 1934.

Rand practice (after Prentice, *44 IMM 479*). The mills used range from 5 1/2 to 8 ft. in diameter and 22 to 16 ft. in length correspondingly. Substantially all use grates with elevators to trunnion discharges. Experience shows about 15% more grinding to <100-m. with grates, but power and liner and pebble consumption are also higher by about 15%. Grates are made 2 to 3 in. thick with slots to permit discharge of 1 1/2-in. pebble. Liners are universally of steel, of bar (Osborne) or block types (Art. 5). A typical Osborne liner has 4×1 1/4×3/4-in. steel bars alternating with end wedged in by flat bars 2 1/2 or 3 in. wide × 1/2 to 3/4 in. thick; total weight of steel for a 5 1/2×22-ft. mill is about 10 tons. Block liners are white-iron or steel castings, say 21 × 8 × 4 or 5 in. thick, either solid or honeycombed for pebble catch. The solid type is usually either waved or corrugated. Edges are ground to wedge in without bolting. Weight of solid blocks for a 5 1/2×22-ft. mill is about 13 tons. Life is 140 to 330 days. Charges are usually a composite of mine rock (2 1/2 parts) and balls or scrap steel (1 part), if the motors have sufficient power. Balls are usually 3-in. in primary mills and 2 1/2-in. in secondary. Cast balls cost (1934) $60 to $65 per ton. Scrap steel is ordinarily 4-in. lengths of

rail or about 4-lb. lumps of scrap liner; effectiveness in grinding is less than with balls, but cost is only about 10% of that of balls. Trunnion trommels with 1/4-in. aperture collect 2 to 40 tons of reject pebble per mill per 24 hr. Daily pebble consumption is about 13 tons in 5 1/2-ft. mills, 20 for 6-ft., 33 for 6 1/2-ft., and 55 for 8-ft. Motors for 5 1/2×22-ft. mills are 100 to 125-hp. for pebble loads; for composite loads: 175-hp. for 5 1/2-ft., 250-hp. for 6 1/2×20-ft., and 350-hp. for 8×16-ft. Feeds are <1-in. Pulp density is 67 to 75% solids. Capacity is about 450 tons total feed (new + circulating) per 24 hr. to a 5 1/2-ft. mill, 900 to a 6 1/2-ft., and 1,300 to an 8-ft.; circulating-load ratio is rarely greater than 2.0. Centrifugal pumps, air lifts, or hydraulic lifts are used for elevation to classifiers. Capacity rated on production of <100-m. is about 150 tons per 24 hr. for a 5 1/2-ft. mill with pebble load, and 230 tons for a 6 1/2×20-ft. mill; for a composite load the daily tonnage is about 15% greater at an increased cost per ton for the balls of 2¢. Power consumption averages 18 kw-hr. per ton of <100-m. produced. Average cost per ton of <100-m. produced (1934) was about 30¢ per ton in all-slime plants and 22¢ per ton in sand-slime plants.

Table 36. Performance of 5 1/2×22-ft. tube mills on Rand ore, using 6- to 9-in. cubes of banket for grinding medium (*71 A 983*)

Aperture of battery screen, linear mesh	Tons feed per 24 hr.	<100-m. in final product, %	Tons <100-m. per day in final product
2.24	145	79.3	115
2.83	150	85.1	128
3	125	84.6	106
3	138	85.2	118
3	129	84.2	109
4	113	79.1	89
5	146	80.8	118
5.1	126	77.6	98
6.85	107	64.0	69
7.94	132	76.4	101
8	144	85.7	123
8	146	81.4	119
8.06	143	81.0	116
8.12	146	77.3	113
8.5	137	78.4	107
8.5	130	79.2	103
10	145	83.0	120
12	126	75.5	95
12.6	130	81.5	106
12.7	131	75.7	99
15.8	119	76.4	91

At YOUNG-DAVIDSON (*Bul 333 CIMM 52*) when using a half-and-half load of flint pebbles and 2 1/2-in. balls, consumption was 0.4 lb. of balls and 0.5 lb. of pebbles per ton of new feed.

Size of feed in most modern practice, other than that prevailing in the Rand, is in the range of 14- or 20-m. limiting mesh, this material being prepared by a primary ball mill or by a preceding tube mill. Rand practice, in which considerably coarser feeds go to primary tube mills, is a survival stemming from adaptation of existing gravity-stamp tube-mill installations. The new plants on the Rand use secondary crushers, primary ball mills, and one or two stages of tube milling, according to the size necessary for reasonably complete exposure of values.

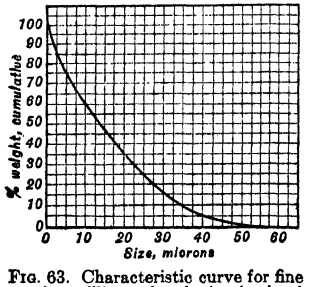

FIG. 63. Characteristic curve for fine tube milling; closed circuit; hard ore.

Within limits, the amount of fine material produced per mill per unit of time, particularly in single-pass grinding, increases with the size of feed. The general trend is shown in Table 34. The tendency is more pronounced with pebble charges than with balls, due to the fact that the heavier balls break down the coarse particles more readily than pebbles do, and the contribution to fines production from the surface irregularities of these large particles is not so great proportionately. (See also *Ed. 1, p. 451.*)

Size of product is generally 100 *mog* or finer. Distribution curve based on infrasizing (Sec. 19, Art. 14) is shown in Fig. 63.

Reduction ratios are, in general, less than 10. Higher ratios correspond to the outmoded practice of feeding 1/4-in. or coarser material.

Capacity to a given *mog* is dependent primarily upon kind and volume of tumbling charge and its activity. Mill diameter is of relatively small importance with ball charges because of fine feeds, but is important with pebble loads. Variations in capacity with optimum charge conditions are due almost entirely to ore character, *mog*, and pulp consistency. With average ores, 5- and 6-ft. mills charged with pebbles should grind about 0.3 to 0.4 ton per hour per ton of charge from 14~20-m. limiting to 100 *mog;* with ball charges production should average 50% higher. It is reported (*32 JCM 93*) that under similar conditions on Rand ore capacity decreases 10% for each increase of 5% in the amount of <200-m. in the product.

Table 37. Effect of feed rate on performance of 5×14-ft. tube mill (*After Mishler, 98 J 469*)

	Coarse feed								Fine feed							
Feed rate, tons per 24 hr., original + circulating	22		47		70		85		67		80		239		693	
Tons original feed per 24 hr.	22		30		37		37		37		37		50		75	
Moisture, per cent	47.6		48.5		45.6		47.3		31.0		30.6		31.4		35.5	
Screen analyses	Weight, per cent.															
Mesh	*NF*	*CO*	*NF*	*CO*	*NF*	*CO*	*NF*	*CO*	*NF*	*CO*	*NF*	*CO*	*NF*	*CO*	*NF*	*CO*
20	11.2	0.3	21.6	0.2	18.4	.....	22.4	.....	0.2	.....	0.3	.....	0.5	.....	1.0	0.2
40	28.0	0.6	39.6	0.6	45.2	0.4	39.4	0.6	2.5	.....	3.1	0.4	3.3	1.4	6.8	4.6
60	25.6	1.4	23.0	0.8	19.6	4.0	20.6	5.2	4.4	1.1	7.2	1.8	6.4	4.6	11.5	10.8
80	13.4	0.4	3.8	2.2	5.0	4.2	4.2	6.2	8.6	2.8	12.5	4.2	12.8	9.0	12.8	13.0
100	6.0	1.2	2.4	2.9	2.8	5.4	2.6	6.8	25.8	14.8	28.4	19.0	30.7	27.5	28.0	28.5
150	4.6	2.4	2.2	5.4	1.8	8.4	1.2	9.6	30.2	25.8	27.2	29.3	25.0	27.0	24.9	24.6
200	3.6	2.6	1.0	4.9	1.2	6.2	0.8	4.8	17.9	25.5	12.8	15.1	12.6	14.4	9.6	10.3
<200	7.6	91.1	6.4	83.0	6.0	71.4	8.8	66.8	10.5	30.0	8.5	30.2	8.7	16.0	5.5	8.1
Tons produced per hp-hr. *a*																
<100-m	0.016		0.035		0.048		0.055		0.014		0.019		0.025		0.018	
<200-m	0.016		0.032		0.041		0.043		0.012		0.016		0.016		0.015	

a Power constant throughout at 47 hp. in coarse-feed tests and at 44.8 hp. in fine-feed tests.

Character of ore has, in general, more to do with the grinding done in tube mills than in ball mills for the reason that tube-mill feed and product are normally both finer than ball-mill and the bulk of the work of the tube lies in grinding the ultimate crystals of the rock-forming minerals, while much of the work of the ball mill lies in breaking the rock along the parting surfaces between the crystals. Resistance to such parting is much the same in many rocks, hence the resistance of such rocks to ball-mill grinding is similar. But the ultimate mineral crystals differ widely in hardness and toughness and there is consequent variable resistance to grinding in the tube mill. Accurate data on this score, which will form a basis for comparison between plants, are substantially impossible to collect and present, but the possible differences in grinding resistance must be borne in mind in estimating capacity, and final estimates in important cases should always await the test of actual trial. See Tables 44 to 51.

Effect of feed rate in closed-circuit work is shown in Table 37.

Power consumption depends upon weight of charge, diameter of mill, speed, type of lining, and consistency of pulp. For estimates, an average figure of 6 to 7 hp. per ton of pebble load for a 5-ft. center-discharge mill with silex lining, loaded to the axis and grinding a pulp containing 35 to 40% water, is safe, if an additional allowance of 50% is made to cover starting overload. With a ball charge, wave or pocket liners, and 45 to 50% ball volume, 9 to 10 hp. per ton of charge should be estimated. See also Art. 15.

Efficiency. Tons per hp-hr. to 48 *mog* lies, in general, between 0.06 and 0.08 for average ores; the figure tends to be higher with pebble loading. In grinding to 100 or 150 *mog*, tons per hp-hr. will normally lie between 0.03 and 0.05 and tons <200-m. produced per hp-hr. in such grinding will range from 0.015 to 0.030. When grinding to 200-m. limiting the usual range of tons new feed per hp-hr. lies between 0.02 and 0.04, but the tons <200-m. produced per hp-hr. will usually not amount to more than 0.01 to 0.02.

Speed normally ranges from 75 to 85% of critical, the higher speeds corresponding to the smoother liners and smaller loads.

Pulp density is usually from 60 to 70% of solids with pebble charges and 70 to 75% with ball charges. See also Art. 16.

Attendance. See Art. 18.

Lost time. Table 35 indicates an average of about 2 to 5%. With ball charges, freedom from organic waste, a reasonably fluid pulp, and uniform feeding, it should not exceed 1%, principally for relining.

Lubrication. See Art. 19.

Costs. See Art. 20.

OPERATION OF TUMBLING MILLS

[For SPEED see Art. 2; HEIGHT OF DISCHARGE, Art. 3; LINERS and LINER CONSUMPTION, Art. 5; TUMBLING MEDIA, rationing and consumption, Art. 6.]

12. CLOSED-CIRCUIT OPERATION

The practice of discharging partly finished pulp from a mill, removing the finished portion and returning the balance has become an essential part of fine-grinding practice and increasingly an element of coarse grinding. Both screens and sedimentation-type sand-slime separators have been used to remove the fines (CLOSE THE CIRCUIT); mechanical classifiers predominate overwhelmingly. There is no doubt that initially this predominance was due, in part, to the ability of the mechanical classifier to elevate the separated coarse material sufficiently for gravity return to the mill; nowadays this is no longer true of the big classifiers, and auxiliary elevating means must be employed. But ease of operation, relatively satisfactory size-separation, and selective return of metalliferous mineral and middling for finer grinding more than justify its retention.

For description of classifiers and their operation see Sec. 8; for screens, Sec. 7.

Open *vs.* closed circuit. The superiority of closed-circuit operation in finishing grinding in ore milling has been so apparent that few of the results proving it have been published.

Dorr and Anable (*112 A 161*) assert that at LAKE SHORE closure increased the tonnage of finished material per mill 45%, reduced steel consumption from 6.5 lb. per ton of new feed to 3.2 lb., and decreased power consumption 10%, probably because the increased throughput moved the center of gravity of the total load nearer the center of rotation; this reduction constituted a 37% drop per ton of finished material. At LUCKY TIGER (*Ed. 1*) a 5×14-ft. mill grinding 6 or 10-m. feed to 100 *mog* had a daily capacity of 22 tons in open circuit and 37 tons in closed circuit, the corresponding tons of <100-m. produced per hp-hr. being 0.016 and 0.055. A 6×20-ft. mill (*ibid.*) ground 144 tons per 24 hr. from 6-m. to 48 *mog* in open circuit and 240 tons in closed circuit.

Improvement in primary-mill operation is less marked. At CANANEA (Dyrenforth and McArthur, *87 A 149*) closed-circuit operation produced 58% more <48-m. and 63% more <200-m. with 28% less power per ton of new feed and 36% reduction in steel consumption; at MIAMI (*ibid.*) partial closure of the primary circuit resulted in 10% increase in production of both <48-m. and <200-m. At CANANEA (*126 J 990*), in parallel operation of open-circuit and closed-circuit primary rod mills to 14 *mog*, with equal tonnages to both mills, there was 7% less >20-m., 11% more >48-m., and 7% less <200-m. in the closed-circuit product, equivalent to a saving of about 3¢ per ton milled. At BRADEN (Table 41) circuit closure on a primary rod mill increased the production of <100-m. material from the same new feed 21%. Closing the circuit on the primary mill at CONSOL. MG. & SM. CO. (*32[1] CIMM 173*) increased grinding 20 to 25%. C. F. Thompson (*PC*) states that use of even small classifiers on primary mills raises capacity in a stage-grinding circuit by 15 to as much as 50%, the more the harder the ore.

Circuit closure increases selective grinding of grains containing heavy mineral; when this is the valuable mineral a coarser over-all grind is thus made possible. At MIAMI (*87 A 149*) the increase in assay of bowl-classifier sands over that of the overflow (circuit feed) was about 25% in the 48-m. size, 40% in the 65-, and 50% in the 100-, 150-, and 200-m. sizes, while the <200-m. material assayed substantially the same in both products. At UNITED VERDE (*87 A 146*), with 39% sulphides in the primary feed there was 55% in the primary rake-classifier sands and 53% in the bowl sands in the secondary circuit. Marked concentration is reported in Rand circuits. Presence of flotation collector in the grinding circuit decreases selective grinding of sulphides. Selective grinding is advantageous in cyanide mills, but it may produce overgrinding of sulphides in flotation mills.

Causes of advantage in closed-circuit grinding. The changes in conditions inside a mill which correlate with its improved performance in closed circuit, and which must, therefore, hold the key to the explanation, are: (1) Reduction in mean size of feed; (2) marked increase in near-finished sizes; (3) marked decrease in proportion of finished sizes; (4) more rapid travel, *i.e.*, a shorter time per pass; (5) closer approach to a uniform ratio of

ball size to average particle size throughout the length; (6) some increase in quantity of interstitial pulp. The most probable major causes of the improvement are (2), (4), and (5).

Near-finished feed. In cascading operation on fine feeds a mill operates most effectively, all other things being equal, when the ratio of ball size to particle size is such that nip angles with balls in contact are 20° or less (see Fig. 23). Capacity increases with decreasing diameter of ball to the point

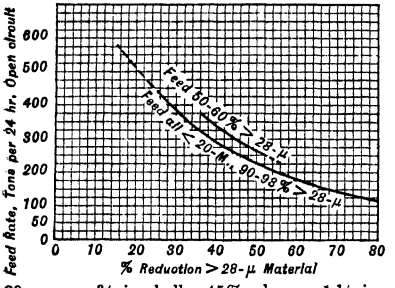

30 r.p.m., 3/4-in. balls, 45% charge, 1 1/4-in. liners.

FIG. 64. Performance curve for 5×16-ft. overflow-type tube mill at LAKE SHORE.

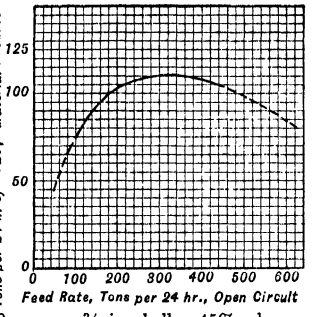

30 r.p.m., 3/4-in. balls, 45% charge, 1 1/4-in. liners, feed <20-m. sand.

FIG. 65. Production of 28-μ material in 5×16-ft. overflow-type tube mill at LAKE SHORE.

that nip angle exceeds the above figure. Consequently the more near-finished material there is in the feed, the higher the proportion of favorable nip angles, and the finer the mean feed the smaller the mean ball diameter may be. Thus in Fig. 64, the reduction of >28-μ material is increased 18% at 300 tons per day feed rate by the decrease in mean size of >28-μ feed as between 90% >28-μ and 50% >28-μ.

The presence of this extra amount of fine sand with coarse particles of new feed has the further effect of increasing the allowable nip angle for the coarse particles. The fine material sands the track, as it were (Sec. 4, Art. 8), and also, by packing around the coarse particles in the interstices of the load, resists their tendency to recede from the crushing zone when nip is difficult.

Uniformity of distribution of feed-size material throughout the mill is evidenced by the relatively small differences in sizing analys's between feed and product, particularly in mills carrying high circulating loads (see Tables 24*a*, 30*a*, 32*a*, 33*a*, and 34*a*). The relative effectiveness of the tumbling

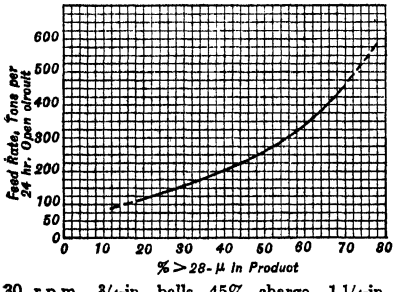

30 r.p.m., 3/4-in. balls, 45% charge, 1 1/4-in. liners.

FIG. 66. Size of product *vs.* feed rate; 5×16-ft. overflow-type tube mill at LAKE SHORE.

Table 38. Effect of feed rate on performance of open-circuit ball mill *a* (*After Dorr and Anable, 112 A 167*)

Feed *b*, lb. per hr.	Finished material (<65-m.) in discharge		Hp-hr. per ton of <65-m. produced *c*
	Lb. per hr.	Per cent. of total	
1,000	600	60	17.8
2,000	970	48.5	11.0
3,000	1,200	40	8.9
4,000	1,400	35	7.6
5,000	1,650	33	6.5

a 3-ft. diameter.
b <3/8-in. limestone.
c Power was constant at 5.4 hp. throughout.

load on new feed and more or less reduced material is clearly shown in Fig. 9. This is operation of the familiar law of diminishing returns. The same phenomenon with a different incidence is shown in Table 38 for relatively coarse feeds and in Figs. 64, 65, and 66 for fine feeds. Fig. 65 shows also that the increase in production with increase in feed rate does have an end well short of the breakdown of grinding in the mill, *i.e.*, that substantially optimum load conditions extend over a considerable part of the range of effective grinding. By increasing feed rate and correspondingly increasing flow through the mill and decreasing the time spent by the pulp at each point along the length, pulp is caused to arrive at each point in the mill and even at the discharge end in substantially the same favorable state for reduction that it entered, with the result that the high reduction rate that prevails in the feed end persists with little diminution throughout.

Reduction in the proportion of finished sizes in the mill reduces overgrinding; this in turn increases the energy available for useful grinding so long as there is an ample supply of unfinished material present.

Gow *et al.* (*112 A 59*) showed the analogy between overgrinding in open circuit or with low circulating ratio and roll operation. They ran a test on rolls in which 40 stages were used to reduce to 48 *mog*. The product contained 22% <200-m. Choke crushing to the same *mog* produced 72% <200-m. To approach the granular product by ball milling would require a short mill, high circulating load, and substantially perfect size separation. Decrease in the amount of <200-m. produced increased the amount of intermediate sizes in the product.

The greater quantity of interstitial material present in a mill operating in closed circuit decreases the effectiveness of the tumbling load to the extent that it exceeds the interstitial volume available with the tumbling media in substantial contact. This is due to the so-called CUSHIONING EFFECT, *i.e.*, distribution of pressure to the point of diffusion. On the other hand, such spreading of the load decreases power and steel consumption, so that the net effect, if the spreading is not excessive, is an increase in operating-cost efficiency.

Table 39. Effect of change in circulating load on capacity of a 6×10-ft. ball mill grinding to 20 *mog* in circuit with an 8×27-ft. heavy-duty classifier (*After McArthur, 134 A 277*)

	Circulating load, %	
	200	460
New feed, tons per 24 hr.	1,585	1,475
Classifier sands, tons per 24 hr.	3,180	6,750
Tons total feed per 24 hr. per cu. ft. of mill vol.	16.8	29.1

Classifier overflow

	Per Cent. retained, cumulative	Tons undersize produced per 24 hr.	Per Cent. retained, cumulative	Tons undersize produced per 24 hr.	Per cent. gain
20-m	2.4	417	1.3	450	33
35	16.8	435	9.0	555	120
48	26.4	385	16.1	443	58
100	46.9	265	34.3	442	177
150	50.5	258	39.3	415	152
200	61.2	196	50.3	338	142
<200	38.8	.....	49.7	.....	.....

Circulating load is the tonnage of solid returned to the mill by the circuit-closing apparatus. It is expressed either as a percentage of new-feed tonnage or as a ratio of circulating tonnage to the tonnage of new feed taken as 1. Circulating loads in practice range from percentages as low as 25 to as high as 1,800.

Tonnage of circulating load is as it falls as a result of physical integration of the reduction ability of the mill on the particular feed running, the tonnage of new feed and its size, the size at which the circuit-closing apparatus is set to discharge, and the separating efficiency of this apparatus. All other things being in each case equal, circulating load is increased by increase in average size of new feed, tonnage of new feed, resistance of new feed to reduction, and by decrease in limiting size of product or of the efficiency of the mill. Throughput corresponding to a given circulating load increases with softness of the new feed.

Table 40. Effect of feed rate on circulating load in open-end ball mill at International Nickel (*58 CMJ 665*)

New feed, t.p.h.	27.4	27.7	30.3	29.9
Circulating-load ratio	2.2	4.3	6.9	8.4
Product, mesh	Cumulative % retained			
65	5.9	6.1	4.9	7.1
100	15.3	15.0	13.5	17.0
150	26.3	25.7	24.1	27.9
200	43.5	43.2	38.7	43.6
<200	56.5	56.8	61.3	56.4

NOTE. Mill operating at 23 1/2 r.p.m. and drawing 200 hp. Feed all <3/8-in.

Within limits, the larger the circulating load the greater the useful capacity of a mill. This is shown clearly by Tables 39 and 40. Increase is most rapid in the first 100% of circulating load, but continues at a material rate thereafter up to some limit, dependent upon the particular circuit, shortly beyond which the circuit chokes.

Fig. 67 presents the results of test work in a 3-ft. laboratory mill, taking <3/8-in. limestone feed. It will be noted that circuit capacity was still rising at 500% circulation. Table 41 shows the same trend in plant practice, with effective circulating loads increasing up to 800%. Dorr and Anable (*134 A 168*) are authority for the statement that circulating loads of over 1,800% have been carried successfully. On the basis of small-mill tests, Bond and Maxson (*134 A 315*) conclude that production to a desired *mog* increases rapidly with increase in circulating load to a broad maximum that is substantially asymptotic between the critical or first marked inflection point and a drop just prior to choking. The Lake Shore tests indicated that substantially the maximum aid from recirculation is reached in fine grinding between 250 and 350% of circulating load. The data of Table 41, however, are generally characteristic of mill experience, and when plotted indicate a gradual but consistent rise in capacity to a given *mog*, at a gradually decreasing rate, with a relatively sudden final drop indicating the onset of choking.

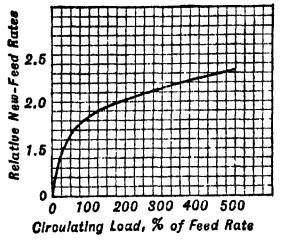

Fig. 67. Change in circuit capacity with change in circulating load (*after Davis*).

Increase in capacity due to circuit closure and/or to increases in circulating load is accompanied by decrease in fineness of the product passing the limiting product screen. This follows from the fact that power input is substantially unaffected by mill throughput and that the total mill work is simply differently distributed as throughput varies.

Table 41. Changes in capacity of grinding mills with changes in total mill load, Braden Copper Co. (*After McArthur, 134 A 277*)

Grinding mill	Tumbling medium	Classifiers in circuit	New feed, tons per 24 hr.	Circulating load		Total tons solid through mill per 24 hr. per cu. ft. of nominal mill volume	Tons <100-m. produced per 24 hr. per mill
				Tons per 24 hr.	%		
1 @ 8×12-ft. primary	Rods	None	1,238	.....	0	2	314
Do.	do.	1 @ 8×20-ft.	1,238	2,000	160	5.4	380
Do.	Balls	1 @ 8×20-ft.	1,000	2,000	200	5.4	415
Do.	do.	2 @ 8×20-ft.	1,120	4,200	375	8.8	450
Do.	do.	1 @ 12×27-ft. FX	1,117	10,000	890	18.4	496
Do.	do.	1 @ 12×27-ft. FX	1,117	11,000	980	20	Choke
2 @ 8-ft. × 48-in. secondary	do.	1 @ 8×20-ft.	396 *a*	542	135	3.4	176
Do.	do.	1/2 @ 23-ft. bowl *b*	560 *a*	740	130	4.7	196
Do.	do.	1/2 @ 23-ft. bowl *b*	560 *a*	1,900	340	6.8	270

a New feed to bowl. *b* 1 bowl to 2 mills in parallel.

McArthur (*134 A 274*) takes the position that the essential element in considering circulating load is the mill throughput and that this is measurable relatively as tons of dry feed per 24 hr. per cu. ft. of nominal mill volume. A column of such figures is given in Table 41. McArthur asserts that modern practice with large mills and heavy-duty classifiers (Sec. 8) clusters in the range of 14 to 20 tons per 24 hr. per cu. ft. of mill volume although the circulating loads in the same circuits range from 400 to 900%. He states that one mill has done well with a throughput of 30 tons per cu. ft. Rose (*134 A 361*) sets the allowable daily throughput at 9 to 14 tons in grinding to 48 or 65 *mog*. McArthur recommends installation of a ball-retaining grid for overflow mills when running high circulating loads. Such a grid used at Hollinger is shown in Fig. 68.

Coghill and deVaney (*CEG*) use tons composite feed per hp-hr. as a measure of the relative size of a circulating load, on the basis, presumably, that comparison of this figure with the tons per hp-hr. to finishing mesh indicates the extent of reduction per pass. They point out that at Hollinger the composite-feed throughput is 0.9 ton per hp-hr. (1.25 min. per pass), which they characterize as a record for mild treatment. The production of <48-m. at Hollinger under the above conditions (*134 A 331*) was 0.1 ton per hp-hr. These authors point out the possibility of increasing the Hollinger rate by using a shorter mill—the mill was already open-end with a full grate—and suggest that on soft ores in such a mill total load might well run up to 2 tons per hp-hr. as against 0.5 ton for hard ores.

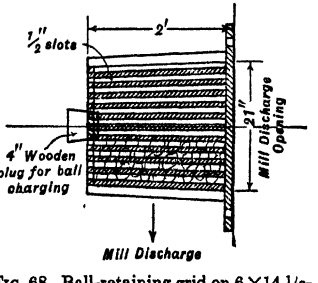

Fig. 68. Ball-retaining grid on 6×14 1/2-ft. overflow mill at Hollinger (*after H. W. Hitzrot, PC*).

Coghill and deVaney (*27 #6 MMC 7*) summarize the effects of variation in circulating load on size of circuit products as follows: As tonnage of new feed increases and the tonnage of classifier sands correspondingly grows, the classifier sands become coarser, but the composite mill feed becomes finer because of the higher content of circulating load. At the same time the mill discharge becomes coarser because of decreased time-per-pass, so that the spread in size between composite feed and mill discharge decreases. They assert that the amount ground out per pass varies as the arithmetic mean of the surfaces (Coghill method, Sec. 19, Art. 19) of composite feed and mill discharge, and that the capacity of the circuit varies inversely as the percentage of finished material in the composite feed.

Balanced circuit. Conditions for a grinding circuit in balance are given in the following equations. Let T = tons per unit of time of the material indicated by its subscripts. Subscripts: C = composite feed, N = new feed, R = return sand; O = oversize, and U = undersize of the separating mesh; G denotes ground through separating mesh. C = circulating-load ratio, f = decimal fraction (cumulative) of new feed retained on separating mesh, and g = decimal fraction of composite feed ground through separating mesh per unit of time.

$$T_{RO} = T_{CO} - T_G \qquad (1)$$

$$T_{CO} = T_{RO} + T_{NO} \qquad (2)$$

From (1) and (2)

$$T_G = T_{NO} \qquad (3)$$

By definition:

$$\frac{T_R}{T_N} = C \qquad (4)$$

$$g = \frac{T_G}{T_C} \qquad (5)$$

$$T_C = T_R + T_N \qquad (6)$$

From (3), (4), (5), and (6)

$$g = \frac{T_{NO}}{T_R} \cdot \frac{C}{1 + C} \qquad (7)$$

$$f = \frac{T_{NO}}{T_N} \qquad (8)$$

From (7), (8), and (4)

$$g = \frac{f}{1 + C} \qquad (9)$$

Since (9) is true for the cumulative oversize on the separating screen and for any tonnage and time, it must be true for each of the corresponding cumulative oversizes coarser than the separating screen. Further, if it is true for the cumulative oversizes, it must be true for the individual oversize. Now $1 + C$ is the number of passes through the mill assured to any given particle of oversize in new feed. Hence g is the fractional part of each and every individual oversize in the new feed, above and including the separating screen, that must be ground through that screen per pass, in order to maintain the circuit in balance.

New-feed rate. Unless the new feed is completely uniform in size distribution, quantity, and crushing resistance, and the separation by the circuit-closing apparatus (GUARD) a constant, or unless the variation in one or more of the others, which is even less within the realm of likelihood, then new mill-feed tonnage must follow a roughly sinusoidal path, with control following some indicator of the feed-discharge oversize ratio. Mill sound and mill power draft are the operating indicators (see Art. 18). Tendency for material to build up at a given size may be countered by change in the ball ration (Art. 6). Thus at NEW CORNELIA (*143 #5 J 63*) build-up of 35∼65-m. material in grinding to 65 *mog* was overcome by changing the new-ball feed from 100% @ 3-in. to 40 @ 3-in. and 60 @ 2-in.

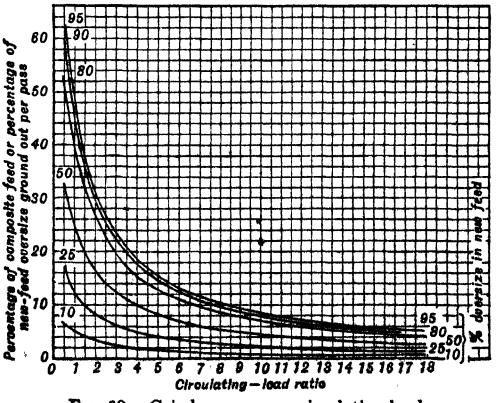

FIG. 69. Grind-per-pass *vs.* circulating load.

Severity of grind necessary to maintain balance with different amounts of finished undersize in new feed is indicated in Fig. 69. It is apparent that with new feeds containing large percentages of unfinished material the percentage ground out per pass must be large with low circulating-load ratios, but that the advantage of increase

in ratio beyond 5 or 6 is relatively small. With high percentages of finished material in the feed, on the other hand, there is little advantage in ratios larger than 2 or 3.

Point of introduction of circuit feed. It appears from the preceding paragraph that little advantage is gained as respects severity of grind by closing a grinding circuit, if the new feed to the mill already contains considerable amounts of finished material. But if this material is first removed, as by a preliminary classifier, or introduction of new feed to the classifier closing the circuit, the new feed is changed in nature to one in which the percentage of oversize is large, and circulating-load ratios of 5 or 6 become economical.

Exhaustive tests at INTERNATIONAL NICKEL (*58 CMJ 665*) indicated that there was no mechanical nor metallurgical difference between introducing 4-m. feed directly to rod mills or into the classifier. On the other hand, at BALMAT (*IC 6574*) change from introduction of $<1/2$-in. feed into classifier to introduction into the rod mill improved classifier efficiency and decreased steel consumption by 0.4 lb. per ton and caused an increase in circulating load from 192 to 207%.

Efficiency of circuit guard. Fig. 69 shows that since inefficiency of the guard increases circulating load, the effect on reduction of oversize is rapid decrease in percentage ground out per pass with circulating ratios of 5 or 6 or less. With larger ratios the effects of inefficiency are less prominent.

Optimum circulating load is not a matter to be decided on the basis of any one consideration. Ultimately it should come down to a question of economics in which the factors are metallurgy, market demand (both price and quantity), and cost (both operating and overhead). The mean size of the finished product with a fixed percentage on the

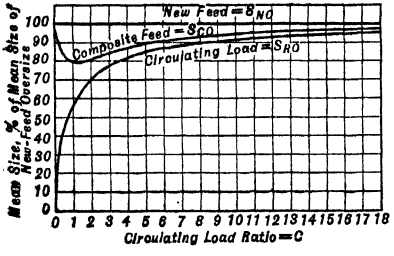

Notes to Fig. 70. The calculations underlying this figure involve a number of assumptions. It is believed, nevertheless, that the relationship presented is real.

1. The mean size of the oversize in new feed $S_{NO} = 1.0$. Percentage oversize is taken as 90.
2. It is assumed that the circuit guard has sufficient capacity so that the limiting size of separation and the separating efficiency remain constant.
3. It is assumed that the 90% curve in Fig. 69 is correct.
4. It is assumed that the reduction in mean size of oversize per pass is equal to the percentage ground out, whence the mean size of oversize returned, $S_{RO} = 1 - g$ (Fig. 69).
5. It is assumed that the return sand contains 35% undersize of the limiting mesh of separation.

On the basis of these assumptions, if tonnage of new feed is taken as 1.0, the corresponding tonnage of return sand is C (circulating-load ratio) and the tonnage of oversize in return sand is $0.65C$. Mean size of oversize in composite feed S_{CO} for any value of C is, therefore,

$$S_{CO} = \frac{1 \times 0.9 + 0.65C(1 - g)}{0.9 + 0.65C}$$

FIG. 70. Relation between mean sizes of oversize in new feed, circulating load, and composite feed (for 90% oversize in new feed and 35% undersize in sand return).

mog increases with increase in circulating-load ratio. This normally correlates with decreased liberation, and corresponding decrease in grade of concentrate or of recovery or both. On the other hand, increase in circulating load was used at HARD ROCK (*34 CIMM 206*) to decrease sliming and overgrinding, which had the effect of bettering flotation results. Net capacity of the circuit increases with increase in circulating-load ratio, provided there is not a corresponding increase in undersize return; this tends to decrease operating and power costs, and to offset losses in metallurgy. Market is an independent factor to the extent that a high-price market with unlimited quantity demand may show increased profits at high tonnages even though these result in both inefficient grinding and poor metallurgy.

When efficient grinding is the primary end sought, optimum circulating load is probably that which gives the largest composite load consistent with a mean size of composite oversize near the minimum. On Fig. 70 this would be between 200 and 300% circulating load. This follows from the fact that the smaller the range between maximum size of feed and finishing size, the less the reduction necessary, the higher the capacity, and the more closely the size of tumbling medium can be rationed (Art. 6).

Circulating load is normally larger in fine-grinding and in secondary circuits than in corresponding coarser circuits. Because of the tendency of sulphides to build up circulation, the load with heavy sulphide ores tends to be larger than under corresponding conditions with low sulphide ores.

Large circulating loads are advantageous in compensating for fluctuations in new-feed size.

Gow *et al.* (*loc. cit.*) set down as criteria for good closed-circuit practice: (1) a moderate mean-mesh reduction ratio (Sec. 19, Art. 19), say 2 to 4, and (2) a limiting size of classifier sand not too far from the limiting size of new feed (say one-half).

Estimate of circulating load may be made by application of the recovery formula (Sec. 19, Art. 24) to the sizing tests of feed and products of the circuit guard, knowing that tonnage of overflow equals tonnage of new feed. It is found that the tonnage thus estimated varies considerably according to the size taken as the assay basis. This size should be the one for which the least assay value is the largest number. The only reliable determination of circulating load is by a tonnage sample, either of the load itself or by separate tonnage measurements on new feed to the circuit and total circuit flow.

Interstitial filling. Visualization of physical conditions in a tumbling load (Art. 2) indicates that maximum availability of grindable material to active grinding zones occurs when the grinding faces are in substantial contact and the interstices are completely filled with a pulp as thick as will permit ready flow. Batch testing (*CEG*) shows that both maximum power draft and maximum grinding occur at this condition; it is indicated, however, that maximum power efficiency occurs with a greater interstitial loading, because of the fact that grinding per unit of pulp charge does not decrease in the early stages of crowding expansion of the tumbling charge as fast as power does.

The principal factor controlling interstitial charge in continuous operation is height of discharge. Feed rate and pulp consistency have minor effects, increasing with height of discharge. Decrease in tumbling load with a high-discharge mill aggravates the condition of a pool of pulp above the toe, in which, of course, no grinding is done and the contained material is statistically not in the grinding mill at all. High sp. gr. of material being ground, low sp. gr. of tumbling media, and great length all increase interstitial charge.

Batch laboratory tests (*CEG*) with different minerals, different interstitial loadings, and different speeds indicated that grinding efficiency is a function of all three of these variables. Efficiency was maximum for heavy loads of both chert and dolomite at about 50% of critical speed; with small charges, the efficiency with chert was substantially unaffected by speed, but with dolomite it increased with speed.

Circuit guard may be a screen, a classifier, a concentrating circuit, or any combination of these. Use of mechanical classifiers predominates overwhelmingly. Exhaustive tests with vibrating screens were made at INTERNATIONAL NICKEL (*134 A 361*), indicating that, using stainless-steel cloth, capital cost, repairs, and power consumption would be less than for rake classifiers of equally large capacity, while operating labor would be about the same in the two cases. The screen fails, however, to cause selective grinding of sulphides, and loses out, therefore, on a metallurgical basis in a sulphide-flotation or hydrometallurgical plant; it has shown an advantage in gravity concentration (ARAMAYO, cassiterite; MAGMA, Flat River), some nonmetallic flotation (ALUMINUM ORE CO., fluorspar), and in wet magnetic concentration (TITANIUM PRODUCTS CO., Sec. 2, Fig. 159).

Playford (*91 NS Aa 439*) states that at MT. LYELL the volume of the chalcopyrite particles in the overflow of a primary classifier at sp. gr. = 1.71 was $1/31$ of the volume of the accompanying quartz particles, and that when the overflow was 1.25 sp. gr. the corresponding fraction was $1/8$.

Ordinary iron screens rust so rapidly in wet circuits and consequently blind and wear to such an extent as to be useless; at ALUMINUM ORE CO. (*134 A 322*) where 60×42-m. cloth was used for 65-m. separation in the regular operation of the grinding circuit, much trouble with blinding occurred, which was alleviated by use of stainless steel. Price of stainless-steel cloth is about 3 times that of phosphor bronze; Monel metal has not the abrasion resistance of stainless steel and price is within 10% of it.

Classifier capacity. Until recent years lack of classifier capacity has limited circulating loads in many mills, and has thus limited grinding capacity.

At TOUGH OAKES capacity with two classifiers was 28% greater than with one; at CONSOLIDATED MIN. & SMELTING, 35%; at WRIGHT-HARGREAVES increase in size of classifier increased tonnage to 20 *mog* 45%, and at MORENCI a similar change produced an increase of 96% to 65 *mog;* at CHINO, in a test run, change from one classifier per mill to six resulted in change in circuit capacity from 150 to 250 tons per 24 hr. and in reduction of steel consumption from 3.2 to 1.5 lb. per ton of new feed (*112 A 161*). At BLACK HAWK (*IC 6359*) change from a small to a large classifier decreased total mill cost from $1.85 or $2.00 per ton to $1.50 or $1.65 per ton. At EL POROSI (*PC*) the limiting capacity of a circuit with a 5×12-ft. rod mill and an old-style classifier was 16 t.p.h. grinding from $1/2$-in. to 28 *mog;* installation of a large heavy-duty classifier permitted increase in circulating load, and capacity of the circuit was raised to 20 t.p.h. without change in *mog*. Performance figures on grinding-mill capacities with old-style classifiers must, therefore, be read with these facts in mind. Continuation of the inefficient circuits was due to the necessity for large floor space and auxiliary transport that was involved in multiplication of classifiers. Heavy-duty mechanical classifiers (Sec. 8) are now available, however, with capacity sufficient to swamp any available single grinding unit.

Concentrators in the grinding circuit save mineral at relatively coarse sizes and thus insure against after loss; they reduce both the tonnage to be ground and the tonnage of circulating load. Their use in primary circuits in gold-flotation mills is almost standard practice (see Sec. 2, Art. 22).

At HARD ROCK (*34 CIMM 206*), a unit flotation cell placed in the circuit removed about 50% of the sulphides and permitted an increase in the new feed to a 7×9-ft. ball mill from 12.6 to 14.7 t.p.h. with a reduction in circulating-load ratio from 6 to 4.5. Parsons (*60 CMJ 693*) notes the revival of AMALGAMATION for this service; he calls attention to the tendency of ball mills to flatten gold and make it unsuitable for concentration on amalgamating plates, wherefore jigs or blanket tables are better. A mill modification of the superpanner (Sec. 19, Art. 22) is said to be having considerable success; in some cases the sides of the bowl are amalgamated. White (*31 JCM 161*) states that inclusion of amalgamation in the grinding circuit results in a tremendous tie-up of gold in the grinding mill. Table 42 presents the distribution of such values in the clean-up of one mill with El Oro lining. This tie-up is less,

Table 42. Distribution of gold contents of a standard tube mill on renewal of liner after 192 days of operation

	Tons solid	Assay, oz. Au per ton	Oz. Au
Washed out by feeding water only with mill operating, 60 min.	3.74	3.55	13
Water stopped and mill run 20 min., when discharge stopped	0.40	11.05	5
Door plug opened and pulp charge flushed out	2.59	28.40	73
Washings from removed rail liners	0.50	402.1	202
Sand held back by rails before removal	0.32	174.8	55
Scrapings from mill shell	0.81	825.5	662
Scrapings from end liners and discharge grate	0.03	305.4	9
Totals *a*	8.39	121.4	1,019

a The calculated lockup at this time was 1,760 oz.

of course, when grinding in cyanide solution. The effect of stopping a mill is to cause discharge of enriched pulp on restarting. Thus a mill which was averaging 9 dwt. discharge at 270 tons per 24 hr. discharged pulp assaying 325 dwt. immediately on restarting, 196 dwt. at 5 min. after starting, 87 dwt. at 10 min., 64 at 15, 58 at 25, 112 at 35, 96 at 45, 17 at 75, and averaged 10 for the 6-hr. period after starting. Full discharge rate of 270 tons was reached at 165 min. after starting. These data were confirmed by Dewar (*31 JCM 294*) at GOVERNMENT AREAS. He found, however, that gold released on a shutdown was substantially all picked up by corduroy, so that there was no undue fluctuation in feed to cyanidation. He also found a much smaller absorption by wave-type liners and a large absorption by a circuit including a rake classifier.

Roughing flotation of primary-circuit product with immediate discharge of tailing and regrind of rougher concentrate is practiced at a number of copper mills and at CLIMAX MOLYBDENUM (Sec. 2).

Concentrators in a grinding circuit, particularly flotation cells, are usually guarded against oversize by a screen. This is normally of trommel type attached to the discharge trunnion. It may be provided with an interior spiral for return of coarsest oversize and small balls. At the LAVA CAP mill (*140 MJ 52*) the usual trunnion screen gave trouble because of the necessity to shut down the mill whenever screen repair was necessary. It was replaced by a vibrating screen, fed by a rotary elevator 76 in. diameter, with a bypass to the classifier to permit screen repair during operation. Elevator buckets were especially designed to operate at mill speed of 25 r.p.m. without centrifugal spill on the upcoming side or centrifugal carry-over at the top. Plan of the arrangement is shown in Fig. 71.

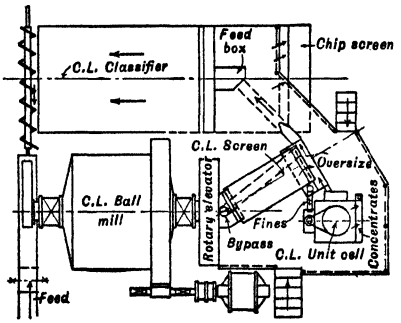

FIG. 71. Arrangement of scalping screen in grinding circuit at LAVA CAP.

As a general rule, if it is necessary to have auxiliary elevation in a grinding circuit, it is best to put it on the mill discharge; it is more dilute and easier to handle than return sand, and is less abrasive (*112 A 176*).

Differential grinding of materials of different hardnesses and substantially the same specific gravities causes concentration of the harder material in the circulating load.

At PERMANENTE (*148 A 374*) the primary-circuit feed contained 71% $CaCO_3$ in the >½-in. size and 88% in the >20-μ size; the mill discharge assayed 34% $CaCO_3$ in the >6-m. size and 85% at

>10-μ; classifier sands analyzed 48% $CaCO_3$ in the >6-m. size and 84% at >10-μ; classifier overflow contained 60% $CaCO_3$ in the >28-m. and 85% at >10-μ.

Differential grinding may be used as a preliminary step in concentration by choosing mill diameter and/or grinding media of such sizes that the soft ingredient of an ore is ground preferentially. Coghill and deVaney (*CEG*) cite oolitic hematite and quartz, barite and chert, and vanadium ore. Sphalerite in chert chats has been freed similarly, and the method was used on telluride dumps at INDEPENDENCE (*87 A 94*). See also Sec. 14, Art. 11.

Stage grinding is size reduction in a series of grinding circuits to which the feeds are successively finer. In the majority of cases two stages only are employed. Gow *et al.* (*loc. cit.*) define the term more broadly and include progressive reduction in a closed circuit, but this is not the usual connotation of the term.

Employment of stage grinding is based on what appears to be almost universal experience that greater economy in grinding ensues, if the reduction ratio in a single circuit is limited.

Limiting reduction ratios of 250 (3-in. to 48-m.) in a single stage were not uncommon 20 years ago. Modern practice inclines toward ratios of not to exceed 6 or 10 in primary and secondary mills and 4 or 6 in tertiary. The necessity for stage grinding increases and economical reduction per stage decreases with increasing resistance of the ore to grinding. The apparent reason is that best results in grinding are obtained when ball diameter is rationed to the near-finished size. If maximum size is too much larger than this, the large particles are not nipped unless the tumbling load is expanded by increasing interstitial filling. This decreases capacity. The alternative is to run at cataracting speeds in order to crush the large particles by impact, but this decreases superincumbent load, with a consequent decrease of cascade grinding that is not always fully compensated for by the increase therein due to higher rotation speeds of the tumbling bodies (Art. 2).

At UNITED VERDE (*IC 6343*), in a one-stage ball-mill operation, 1,200 tons per 24 hr. was ground to produce 840 tons of <100-m. at 15.3 hp-hr. per ton of <100-m. produced; in two-stage ball milling of the same feed 1,600 tons per 24 hr. was ground, producing 1,200 tons of <100-m. with a consumption of 14.2 hp-hr. per ton of <100-m. produced. Dorr and Marriott (*87 A 112*) reported that at UTAH (Arthur plant) change from one-stage to two-stage operation increased power consumed per ton milled from 5.9 to 7.6 hp-hr., but the grind was sufficiently finer so that the consumption per ton of <100-m. produced decreased from 15.6 to 14.4 hp-hr., and the corresponding figures for <200-m. were 21.8 and 19.8 hp-hr. Grade of concentrate was raised from 31% Cu to 32%, tailing fell from 0.19% Cu to 0.11%, and recovery increased from 81.7 to 89.3%. On the other hand, at ROAN ANTELOPE, with a relatively soft ore that classifies well, two @ 9×8-ft. grate mills per section in a two-stage arrangement thus: 1 @ 9×8-ft. ball mill → 1 @ 12×20-ft. quadruplex Dorr classifier, sands to mill, → 2 @ 18 (diam.)×12×31 2/3-ft. bowl classifiers in parallel, overflow finished, → 1 @ 9×8-ft. ball mill, discharge to bowls, ground 1,500 to 1,600 tons per 24 hr. from 1 1/2-in. to 86% <200-m. (100 *mog*). Difficulty was had in maintaining balance between the circuits, and the bowls tended to overload. A one-stage arrangement thus: 2 @ 9×8-ft. ball mills → 2 rakes each of the quadruplex classifier, sands to mills → Cascade flotation machines, concentrate finished → 2 bowl classifiers in parallel, overflow finished, sands to mills, raised the tonnage to 1,000 tons per mill per day to 90% <200-m. The change had the further result of decreasing steel consumption, which, in the secondary mills, had been double that in the primary owing to absence of primary slime, and of more than doubling the life of the pumps elevating mill discharge, the same explanation holding. At NEW CORNELIA (*153 A 333*) a two-stage circuit similar to item *4*, Fig. 72, except that a part of primary-classifier sand was cut back to the primary mill, was changed to the circuit, item *2*, after prolonged testing had indicated an increase in section capacity of 4.2% and a decrease in power consumption per ton of 3.5% with the single-stage operation.

Justification for a second grinding stage usually lies in improved metallurgy due to finer grinding; the economic advantages of this must exceed the increased operating cost. Justification for a tertiary circuit is found in the necessity for an excessively fine grind, the presence of a high resistance to fine reduction, or possibly to a demand for increased capacity that can be more cheaply or effectively satisfied thus than by increase in secondary units.

Canadian practice is a valuable indicator of present-day milling opinion because more new mills have been built there over the past 15 years than in any other part of the world, and practice has not been hampered by existing installations. Analysis of that practice by Hanson (*140 #6 J 39*) follows. In the PORCUPINE district, where metallurgical demands are satisfied by a grind to 65 to 80% <200-m., single-stage grinding predominates. The ADVANTAGES are: less floor-space required, less attendance, larger units with corresponding economy in power and steel consumption. DOME is an exception on account of the coarse gold present, which demands an open-circuit primary mill with removal of coarse gold on blanket tables ahead of the secondary circuit. Feed to the primary must be kept down on account of lack of a circuit guard. At the other mills of the district the gold is finer and is taken care of generally by roughing on blankets, shaking tables, unit jigs or flotation cells in the grinding circuit. In the KIRKLAND LAKE district metallurgical requirements call for grinding to 200 *mog*. Here two stages are used in all plants and three in some. Feeds to the grinding circuit are 3/8- or 1/4-in.

limiting. Relatively short mills in closed circuit with standard rake or spiral classifiers are usual. Secondary mills are tubes in closed circuit with bowl classifiers, mill feed being the deslimed product of the primary circuit.

Concentrating practice in the early 1930's in copper and lead-zinc mills, as sampled by the Bureau of Mines (*IC 6792*) showed 9 @ one-stage, 15 @ 2-stage and 1 @ 3-stage installations out of 25 reported. Of the one-stage operations, two were rod and 7 were ball mills. Of the two-stage operations, the primary stage was rod mill in 4 and ball mill in 11; the secondary stage was rod in one, ball mill in 14. During the 1930's, in so far as changes in the larger mills were concerned, the trend was toward multistage.

Balancing stages so that the energy and capacity available in each stage are utilized effectively is the desideratum—and bugbear—in stage grinding. It is difficult, and rarely practical, to determine the conditions for even approximate balance in advance of installation, for the reasons that (*a*) the optimum diameter and diameter-length ratios of primary mills are different from those for secondaries unless the feed to the primary is relatively fine (<$^3/_{16}$-in.) and the final *mog* relatively coarse (48); (*b*) the grindabilities of the primary and secondary feeds are usually different, and vary with the size of the primary product; and (*c*) the optimum capacity of the secondary circuit is necessarily a whole-number multiple of a relatively large fraction of the primary-circuit capacity. As a result, the installation is usually made on the basis of a guess, more or less shrewd according to the experience and ability of the designer, and operation then becomes a continual fight to get and keep in balance. Increase in power per unit of reduction following an increase in stages is *prima facie* evidence of initial lack of balance, and such an increase without a correlative change in character of ore during stage operation indicates a decrease in degree of balance.

At Wright-Hargreaves (*140 #4 J 37*), after long experimentation on a hard, siliceous ore, the following conclusions were reached as to the proper principle to govern balancing: (1) Production of <200-m. (the desired finishing *mog*) is done most efficiently in tube mills charged with small balls and fed with a granular product as fine as possible. (2) Production of such granular secondary feed is best attained by getting finished material out of the primary circuit as quickly as possible. (3) This may be done by reducing the time per pass in the primary mill either by (*a*) a high new-feed rate, or (*b*) a high circulating load (attained with constant feed rate by decreasing the size of primary classifier overflow), or (*c*) by maintaining a steep pulp gradient through the primary mill.

At Hollinger advance provision was made for combating both difficulties by providing for variable speed of one out of four secondary mills (*134 A 331*). Change in weight of tumbling load in one of the circuits is an analogous remedy. Change in ball size in the secondaries is a common expedient. Hour-to-hour operating adjustment is effected by control of the primary-classifier overflow or, in aggravated unbalance, by change of new-feed rate. Dorr and Marriott (*87 A 112*) warn against changes from one-stage to multistage grinding in which the old single-stage mill is made the primary with no change except, perhaps, an increase in ball size, and without increase in, or even with elimination of facilities for classification.

Grinding flowsheets differ not only in number of stages but in the kind and placing of circuit guards. Essential differentiations in the latter respect are whether new feed is deslimed or otherwise scalped before entering the primary mill, and whether desliming or other unloading classifiers precede the subsequent circuits. Fig. 72 presents typical circuits.

Circuit *1* is substantially a scrubbing circuit, used, for example, with a light rod load in preparing pebble-phosphate feed, P_2, for table flotation, after discard of slime P_1. Circuit *2* is a typical one-stage flow, taking whole feed. Circuit *3* is substantially the same, except that the mill feed is scalped by the classifier. Flow *3a* is a variant used at Morris Kirkland for one-stage grinding from $^3/_8$-in. to 80% <325-m. Flow *4* comprises an open-circuit primary mill, a separate scalping classifier, of rake type, and a closed secondary circuit, with the classifier overflows joined. This is typical of flotation circuits using primary rod mills in what is substantially secondary crushing. Flow *5* is typical 2-stage grinding for flotation, with whole feed to the primary mill and the burden of final separation on the secondary classifiers. It works satisfactorily, if the ore is reasonably clean and the *mog* not less than 65. Flow *6* is a variant of *5* used when the feed contains much primary slime which makes classifier operation difficult but is not harmful in flotation. Such removal is an aid to selective grinding of sulphide in the secondary circuit. Dyrenforth and McArthur (*87 A 149*) credit preliminary desliming at Miami with an increase of 18% in the amounts of <48-m. and <200-m. produced per primary mill, but inspection of the supporting data shows that the change in feed size was accompanied by a marked increase in tonnage of new feed and a coarser primary-classifier overflow, both of which would work to the same end. These authors also credit preliminary desliming at Nevada Consolidated (McGill) with increases of 16% in <48-m. and 42% in <200-m., 28% saving in the power consumed per ton of new feed, and 30% saving in the power consumption per ton of <200-m. produced. At Chino (Anable, *126 J 990*) the percentage of >100-m. in the primary-circuit product was decreased 5% by preliminary desliming, which is equivalent to 5 to 10% increase in capacity to 100 *mog*. On the other hand, Bates (*73 A 313*) reported that at Utah complete desliming of primary-mill feed reduced capacity; at Roan Antelope (*ibid.*) it was noted that the presence of primary slime in the primary mill increased adherence of pulp to the grinding media and resulted in better performance; and Dorr and Anable (*112 A 168*) warn that removal of primary slime may make control of classification difficult in succeeding circuits. At Consolidated Mining & Smelting Co. (*87 A 108*)

passage of primary slime through the ball mills was found to better flotation results, probably by removal of oxide coatings from the sulphides. Parsons (*60 CMJ 693*), bearing in mind the danger of overgrinding flotation feeds, recommends short ball mills and multiple classifiers therefor, and long tube mills and ample classifier-overflow capacity for gold ores.

Flow *7* is the variant of *5* applicable when the *mog* is finer than 65. Flow *8* is another variant of *5* used when it is desirable to float primary slime separately, but some mill action on the sulphides therein is desirable. It may also be used simply to unload the secondary circuit, *e.g.*, at CANANEA (*87 A 112*) such a bowl removed 40% of the section tonnage; overflow was recombined with the product of the secondary circuit for flotation. The intermediate classifier also tends to steady operation in the following circuit. At NEVADA CONSOLIDATED (*87 A 125*) it was found that the intermediate deliming classifier increased capacity but harmed metallurgy.

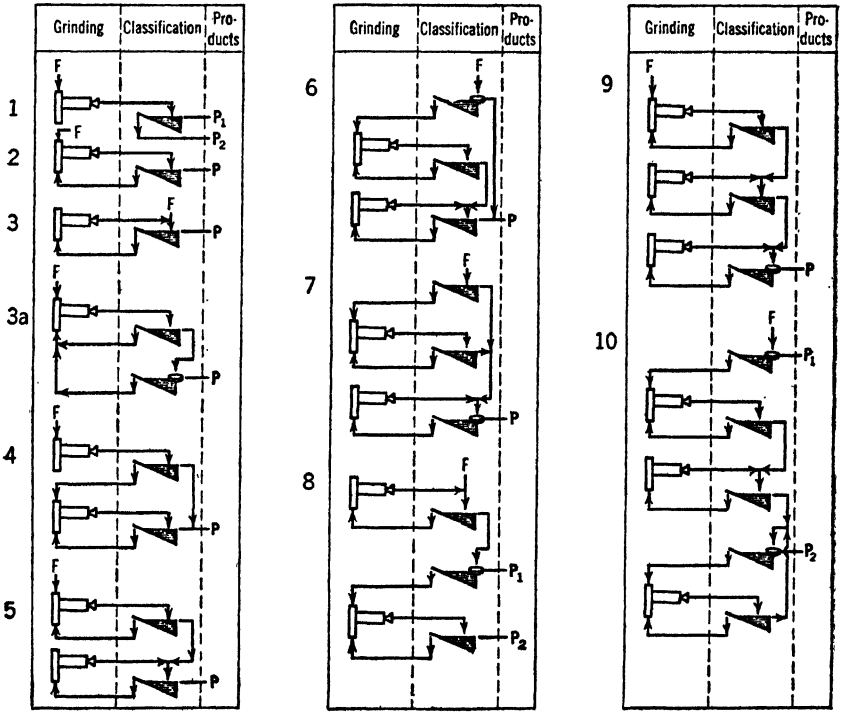

FIG. 72. Typical grinding circuits.

Flow *9* is a typical 3-stage set-up for a final *mog* less than 100. Flow *10* provides for very fine grinding with preliminary removal of primary slime when its presence is harmful in the later classifiers, and for relief of sand load on the final bowl.

The disadvantage of flowsheets comprising only one primary mill is that the entire section capacity is lost whenever the primary circuit is shut down; the loss in machine time is the greater, the more secondaries are installed per primary.

Reagents in grinding circuits may or may not affect the performance of the circuit appreciably. COLLECTORS tend to decrease overgrinding by floating off sulphides by skin flotation, but coarse middling and tramp coarse mineral may be carried over also. Such flotation in the classifier is accentuated, if there is any FROTHING AGENT present in the circuit. LIME may either aid or hinder. McClelland (*Bul 342 CIMM 407*) states that addition of 1.5 lb. per ton to a primary rod-mill circuit increased capacity 15 to 20% since the resulting flocculation decreased the effective sp. gr. and viscosity in the classifier, permitting quicker and cleaner settlement of sands, and the decreased viscosity of the pulp in the mill increased the grind per pass. On the other hand such flocculation with high-sulphide ores has resulted in marked overgrinding in a number of mills because of the substantial impossibility of lifting flotable sulphide into classifier overflow.

At BEATTIE (*112 A 689*) circuit efficiency improves with increase in alkalinity up to 0.004% free Na_2CO_3; above this classifier efficiency falls rapidly. At the same plant alkalinity in the concentrate-

regrind circuit destroys classification completely. At MORENCI (*PC*) there is considerable clay in the ore; this tends to flocculate and carry oversize into classifier overflow even when overflow density is dropped to 16% solids. The ore is sensitive to lime; a slight drop in alkalinity below normal causes coarse sulphide to overflow, too much lime causes flocks to form and carry over spongy siliceous oversize.

Frothing in grinding circuits in cyanide plants is usually caused by soda greases. It tends to carry coarse metalliferous and calciferous rock out of the grinding circuit (and hurry it through the cyanide circuit). The remedy is drip pans at the proper places and cleanliness throughout the mill.

13. SIZES OF FEED AND PRODUCT

Size of feed to primary grinding circuits ranges from about 10-m. limiting to as large as 3-in.; feeds coarser than 1 1/2-in. are, however, unusual, and are found, in general, only in plants of small capacity where the most efficient operating balance between crushing and grinding is undesirable from a first-cost standpoint.

Finished size is almost universally taken out of the feed to mills other than primaries, but practice differs with respect to the latter. Introduction of new-feed undersize to the mill has the disadvantage that some overgrinding necessarily occurs. On the other hand, the percentage of undersize in primary feeds is usually small, and the quantity relative to the undersize returned with circuits sands tends to be negligible. Further, some operators assert improvement in pulp consistency due to primary slimes in the mill. (See Art. 12.)

For sizes fed to specific types of mills see Arts. 7 to 11. In general, feed sizes may be larger the softer the rock. It is worthy of note, as regards smoothness of operation, that size segregation in mill bins is less the finer the feed.

Size of product is the most talked-about subject around a grinding plant and the one of which the least, perhaps, is known. For discussion of methods of size measurement see Sec. 19, Art. 18. For screen analyses and screen-size distributions characteristic of products from specific types of mills see Arts. 7 to 11. The essential showings of these curves are summarized in Table 43.

Table 43. Size characteristics of products of different tumbling mills

Mill	Open Circuit						Closed Circuit					
	80% size, % of limiting screen			Aperture passing 50%, % of limiting			80% size, % of limiting screen			Aperture passing 50%, % of limiting		
	Ore			Ore			Ore			Ore		
	Soft	Aver.	Hard	Soft	Aver.	Hard	Soft	Aver.	Hard	Soft	Aver.	Hard
Rod mill	30	42	52	12	22	32	30	39	56	10	15	30
Overflow ball mill	.....	25	.....	.....	12	.....	20	30	46	7	13	25
Grate ball mill	.....	.....	.....	.....	.....	.....	25	34	51	8	11	25
Conical ball mill	17	24	28	3	8	12	23	27	37	7	9	17
Tube mill	.....	.....	.....	.....	.....	.....	.....	.....	50	.....	.....	25

Fortunately, in ore-treatment mills the object of grinding is to liberate or expose the valuable mineral. Hence the effectiveness of grinding, all other things being equal, can be measured by the metallurgical results. Fortunately again, experience over the years has shown that for a given ore, with given grinding and accessory machines, a definite correlation exists between metallurgical results and certain screen-size characteristics of the ground product. Hence these size characteristics are chosen for operating control of grinding.

Size characteristics normally used for operating control, stated in order of increasing difficulty of ascertainment and interpretation are: (1) *mog*, (2) percentage coarser than the *mog*, (3) percentage coarser than the peak of the distribution curve, (4) percentage finer than the finest sizing used. Thus the operator speaks of a 10-m. or 65-m. grind, implying, properly, not more than a fraction of 1% on the screen named; or of some 2 or 3 or 4% on the *mog*, implying appreciable differences in metallurgy and capacity between the different percentages; or of 15 or 25 or 50% retained on the screen corresponding to the peak of the distribution curve, with an implication similar to the preceding; or to 30 or 60 or 90% <200- or <325-m. of <10-μ, again with the same implication.

The most elaborate published correlation of size of ground product with metallurgical performance is, perhaps, the LAKE SHORE work (*LS*), summarized in Fig. 73.

The relative utilities of the size controls above mentioned depend upon the mineralogical characteristics of the ore and upon the method of recovery employed. At LAKE SHORE the gold is very finely disseminated and is recovered by all-slime cyanidation. Hence, since the extraction process was geared mechanically to a constant efficiency over the range of sizes covered by the tests, metallurgical results varied directly as the degree of exposure of gold. This, in turn, varied directly with the size of particle in the ground product. But see also Fig. 74.

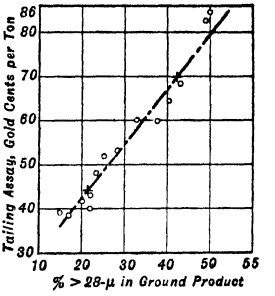

FIG. 73. Correlation between tailing assay and grind at LAKE SHORE.

Constant percentage of intermediate sizes in a ground product was reported by the Lake Shore Staff (*LS*) and confirmed by Dzingheuzian (*34² Bul CIMM 362*). At LAKE SHORE the sum of the >28-μ and <10-μ percentages in the ground product was constant; at SISCOE it was the sum of the >65-m. and <200-m. percentages. This relationship is characteristic of the behavior on comminution of a heterogeneous material composed of hard and softer minerals, when a substantial quantity of the former is freed as individual grains at the coarse end of the range of grindings investigated. If, now, the range of grindings is not too great, with increasingly finer grinds the softer material is ground preferentially, and that fraction of the early released hard material that is further ground by prolonging the operation is substantially balanced by the amount of hard fraction freed from coarse homogeneous grains. Hence the location of the distribution line through the constant intermediate hard fraction remains constant, as does, of course, its slope, while the slope of the fine part of the line flattens progressively as greater and greater amounts of soft material are transferred to this range from the coarse end.

When, as is the case at LAKE SHORE and SISCOE, the bulk of the values is in the softer sulphides, the transfer of material from one end to the other of this constant zone measures the utility of the grind.

Overgrinding. When the values in an ore free at relatively coarse sizes and/or the recovery process becomes progressively more inefficient as particle size becomes finer, the relation between tailing loss and percentage passing some key mesh is no longer a straight line throughout the range of grind possible in normal operation, but will show a minimum which represents optimum metallurgy (and usually optimum profit). Fig. 74 is typical; more detail is shown in Sec. 12, Figs. 55, 56. But see Fig. 73. A grind which is finer than that corresponding to the optimum is characterized as OVERGRINDING.

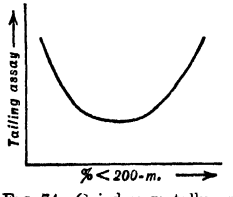

FIG. 74. Grind *vs.* metallurgy in concentration.

Overgrinding occurs at relatively coarse sizes with gravity and magnetic concentration; from the process standpoint alone, 100-*mog* is probably close to the danger point for sulphide flotation, but here the optimum is also so closely bound up with the size distribution of the valuable mineral as to make determination of the economic optimum a necessity for each ore and mill. In any event, allowable tailing losses, measured by weight, are so much higher than in cyanidation that a less precise size control is permissible. Hence the percentage passing 200- or 100- or even 65-m. is a wholly sufficient operating control.

Operating factors controlling size of product are discussed in detail in the articles dealing with specific elements of operation. Fundamentally the size of product depends on the size of feed, its resistance to comminution, the intensity of the grinding forces available, the efficiency of their application, and the duration of their action.

Size of feed affects size of product to the extent that the forces available are limited. If a mill is of small diameter, the tumbling bodies are light in weight or small in number, and/or the speed is such that their momentum is small, coarse feed will cause a coarse product unless the duration of grind is excessive. If, on the other hand, the converse of the above postulated operating conditions prevails, so that adequate force is available for breaking large lumps readily, then considerable variation in maximum feed size within accepted maximum feed-size limits (1/2-in. to 1 1/2-in.) will cause but small variation in size of product, since this is then controllable to a large extent through adjustment of feed rate and/or the circuit guard (Art. 12).

Grindability is the greatest single factor in determining size of product when all other conditions remain constant. At plants where there is marked difference in grindability between ores from different parts of the mine while the metallurgical treatment demands a constant *mog*, feed rate (duration of grind) must be varied to compensate for ore changes, or sufficient suitable storage must be provided to permit efficient blending to a mixture of constant grindability. See also Art. 14.

Fahrenwald (*140 #2 J 73*) states that the more resistant an ore is to comminution the coarser the average size of the product ground to a given *mog*.

Intensity of grinding forces depends upon diameter of mill, conformation of the inner surface (Art. 5), size and shape of tumbling bodies and the amount thereof (Art. 6), and mill speed (Art. 2). Since fineness of product varies as the amount of energy expended,

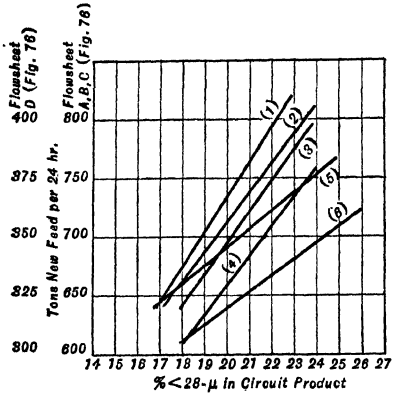

Legend, Fig. 75.

1. Flowsheet A, Fig. 76, all mills low-discharge.
2. Flowsheets A and C, Fig. 76, mill 4 with low-discharge.
3. Flowsheet D, Fig. 76, all mills low-discharge.
4. Flowsheets B and D, Fig. 76, with mills 4 and 4*a* low-discharge.
5. Flowsheets A and C, Fig. 76, all mills high-discharge.
6. Flowsheets B and D, Fig. 76, all mills high-discharge.

The operations summarized in Fig. 75 comprised the entire unit of four grinding sections as shown in Fig. 76, and extended over a period of several years. Owing to variations in grinding capacity with liner wear (see Art. 5), adjustment to a common base was necessary for construction of Fig. 75. This adjustment was made by equation $C \propto D^{2.6}$ (see Art. 14), to bring all capacities to a basis of 2-in. liner thickness.

FIG. 75. Comparative capacities of mills with high and low discharge at LAKE SHORE.

all other things being equal, and force is one component of such work, it follows that product size will vary with changes in any one of the three elements mentioned. The extent and nature of the dependence are discussed in detail in the reference articles.

Efficiency of force application depends upon the size of feed, the characteristics of the tumbling bodies, the distribution of the material in the grinding zone, and the form in

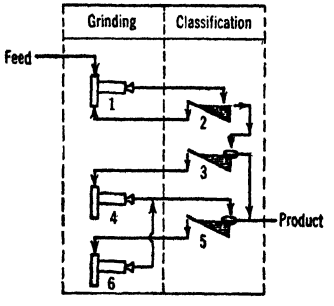

Flowsheet	Item in Fig. 76					
	1	2	3	4	5	6
A	a	c	e	g	j	m
B	a	c	e	h	j	n
C	a	c	e	g	k	o
D	b	d	f	i	l	p

Legend, Fig. 76.

a. 2 @ 7 ×6-ft. ball mills in parallel, 24 r.p.m., 4-in. balls.
b. 1 @ 7 ×6-ft. ball mill, as **a**.
c. 1 @ 4 ×18 1/3-ft. rake classifier for each mill 1.
d. 1 @ 62-in. ×18-ft. Akins classifier.
e. 1 @ 16-ft. bowl classifier.
f. 1 @ 15-ft. bowl classifier.
g. 1 @ 6 ×16-ft. tube mill, 25 r.p.m., 1 1/4-in. balls.
h. 2 @ 5 ×16-ft. tube mills in parallel, 30 r.p.m., 1 1/4-in. balls.
i. 1 @ 5 ×16-ft. tube mill, as **h**.
j. 1 @ 16-ft. and 1 @ 24-ft. bowl classifier in parallel.
k. 1 @ 16-ft. and 2 @ 17 3/4-ft. bowl classifiers in parallel.
l. 2 @ 18-ft. bowl classifiers in parallel.
m. 3 @ 5 ×16-ft. tube mills in parallel, 30 r.p.m., 3/4-in. balls.
n. 2 as **m**.
o. As **m**, but one mill at 27 r.p.m.
p. 1 mill as **m**.

FIG. 76. Flowsheets for Fig. 75.

which it is presented to the grinding surfaces. The coarser the largest feed particles, the less efficient the application of force both to them and to the finer particles (Arts. 2, 3). Proper rationing of the tumbling charge to the feed size is essential to efficient force application (Art. 6). The material to be ground should be present at all times at the contacting surfaces of all tumbling bodies, in such quantities as to utilize fully the forces available.

This means practically that the amount of interstitial material should be limited to such an extent that the interparticle pressures of the tumbling media are not dissipated by compacting of rock particles, while, on the other hand, the amount and consistency should be such as to maintain a layer at all times between approaching surfaces of tumbling media. Departures from any of the optima of efficiency results in a coarser product. Quantity of interstitial material depends upon height of discharge (Art. 3) and upon total feed rate (Arts. 12, 14). For the effects and control of pulp consistency see Art. 16.

Duration of action and size of product vary inversely. The character of the variation under a number of different conditions on one ore is shown in Fig. 75. The limits to the relationship are not known. It is to be expected to break down if the natural grain size is below the *mog*, particularly if the natural grains are tough. It also should fail if the tumbling load is improperly rationed to the feed, or if any part of the circuit becomes seriously underloaded or overloaded throughout the range of tonnage variation. See also Art. 14.

Cost of increasing fineness of grind comprises the overhead involved in reduction of capacity, the additional power, and additional steel consumption. At UTAH with an 8~10-m. feed, a reduction in *mog* from 48 to 100 cost 2¢ per ton, or 25% of the cost of the coarser grind. The cost of a corresponding proportionate decrease in *mog* from 100 to 200 would be considerably greater. Both the relative and absolute increases would be larger at plants treating lower tonnages. See also Art. 20.

14. CAPACITY

Definition. The capacity of a grinding section in an ore-treatment plant is, properly, the amount of material that it reduces to a satisfactory liberating size per unit of time. If the section comprises successive grinding units, only the last of these is charged with finishing liberation. Each of the earlier mills fulfills its function by delivering to the subsequent unit a product of some prescribed limiting size based upon balance between the stages (Art. 12). Liberation in the final mill will also have been correlated with some particular *mog* (Art. 13). Hence as a practical matter, the capacity of each unit in the grinding circuit (grinding unit with or without a guard) is normally stated as the amount of material fed per unit of time when the circuit is discharging at the desired limiting size. CAPACITY involves always, therefore, the elements of quantity, time, and limiting size of product.

Controlling factors are both structural and operating. The STRUCTURAL FACTORS are the shape and dimensions of the barrel, the liner, and the shape, dimensions, quantity, and material of the tumbling load. The OPERATING FACTORS are the lithological character of the feed, its size and size distribution, and its consistency as determined by the quantity of water with which it is admixed; the size of product, the mill speed, the apparatus in circuit, and, last but not least, the operator.

Power and capacity. The most fundamental approach to the question of capacity is, probably, to look upon the tumbling mill as a mechanism in which kinetic energy in a form capable of doing crushing work is made available to be utilized when feed pulp is moved across the surfaces of the tumbling bodies. In such a view a fundamental measure of performance is the tonnage of product having the desired characteristics which is turned out per unit weight of tumbling load per unit of time, *i.e.*, C = tons of finished product per hr. per ton of tumbling load. Mill capacity T then equals CW, where W is total weight of tumbling load in tons. This approach has the advantage that it sets up as the goal the endeavor to so design and operate as to make a given shell draw the maximum possible power consonant with efficient transformation of the resultant energy of the tumbling load into crushing work on the rock passing through the shell.

The tumbling mill differs from all other crushing apparatus in that it draws nearly maximum power when doing no useful work, *i.e.*, when a dry tumbling charge without rock is being rotated. The procedure of the operator seeking maximum capacity from his mill should be to determine the charge weight and speed that result in maximum power draft, and then to find the feed conditions that produce the desired grind with minimum recession from full power draft. The limiting factor in this search is steel wear. Optimum conditions are those in which the tonnage of desired product per dollar of combined cost of power and steel is a maximum.

Capacity figures presented in the various performance tables in Arts. 7 to 11 are by no means all optima. The averages are, in general, safe for design purposes. Good operation, when not subject to limitations with respect to tonnage of ore available, or to special limitations imposed by metallurgical requirements, should always yield results well above the averages for ore of similar resistance characteristics.

The nature of the effects on capacity of the various structural and operating factors above mentioned are discussed under the various item headings, *q.v.*

Table 44. Grindability based on dry ball milling (*After Bond and Maxson, 153 A 362*) a

Material	Source	Grams per revolution and grams <200-m. per revolution in product												
		Mog, 28	<200, Gm.	*Mog*, 35	<200, Gm.	*Mog*, 48	<200, Gm.	*Mog*, 65	<200, Gm.	*Mog*, 100	<200, Gm.	*Mog*, 150	<200, Gm.	*Mog*, 200
Bauxite	Swann & Co., Ala.							51.2	11.9					
Cassiterite	Vulcan Detinning, N. J.	5.09	1.18											
Chromium, metal	Electro Met. Co., N. Y.							0.31	0.033	0.21	0.044			
Clay	Kaiser, H. J. Co.							4.23	0.96					1.58
	Sun Oil Co.													0.79
Coal	Illinois Zinc Co.							1.61	0.77					
Coke, petroleum	Aluminum Co. of America					0.30	0.081			0.19	1.06			
Copper ore	Anaconda	4.44	1.52	3.31	0.97	2.75	0.95	2.43	1.00	1.85	1.01	1.36	1.02	0.99
	Britannia							1.58	0.62					
	Calumet & Hecla, amygdaloid			1.82	0.55					1.18	0.78			0.63
	Calumet & Hecla, conglomerate			1.23	0.41					0.83	0.53			
	Calumet & Hecla, tailing													0.76
	Castle Dome, Miami	3.66	0.91	2.99	0.88	2.52	0.91	2.02	0.91	1.78	1.00	1.40	1.10	1.04
	Chelan							2.07	0.92					
	Consolidated Cop. Co.					{ 3.00 { 5.32	1.05 2.03	2.10 3.51	0.92 } 1.62 }	2.59	1.56			
	Copper Range (4 *mog*)	1.76	0.55	1.53	0.56	1.37	0.58	1.18	0.60					
	Copper Range, sandstone							2.34	0.88					
	Cyprus							2.11	0.92	1.78	1.07			1.28
	Kanshansi, Congo									1.49	0.94			
	Miami	3.37	0.88			2.61	1.00			1.82	0.95			1.14
	Morenci (Phelps-Dodge Corp.)	6.34	1.57	4.50	1.24	3.33	1.16	2.52	1.12	1.88	1.03	1.40	1.08	1.08
	New Cornelia	2.50	0.76	2.31	0.80	2.10	0.84	2.02	0.91	1.57	1.15			0.94
	Quincy	3.12	0.65	2.18	0.63	1.95	0.70	1.58	0.74	1.41	0.84			
	Sherritt-Gordon					2.97	0.93			1.64	0.94			
	Silver Bell					3.74	1.39	2.80	1.29	1.98	1.18			1.15
	Stadacona Rouyn							2.16	1.15					
	Tennessee					4.80	1.45	3.29	1.35					
	United States Mines, Bingham					5.90	1.82			2.99	1.28			1.85
	Utah Copper Co	3.91	1.04	3.91	1.19	3.23	1.19	2.65	1.24	2.15	1.24	1.62	1.25	1.23
	White Pine, Mich., sandstone	8.63	1.19	4.51	0.92	3.05	0.84	1.62	0.68	1.25	0.70	0.85	0.71	0.73
	White Pine, Mich., shale	3.08	1.03	2.66	1.02	2.30	1.05	1.94	1.05	1.56	1.10	{ 1.25 { 1.43	0.92 } 1.20 }	1.30
Emery	Amer. Emery Wheel Wks.							0.46	0.24					
	Milwaukee Steel Co.					0.41	0.17							
Fire brick	Carnegie Steel					1.98	0.48							

Fire clay	Standard Fuel Co., Mich.									0.96 1.36	0.45 0.71				
Flint	Tri-State					0.90	0.26			0.62	0.34				0.49
Fluorspar	Aluminum Ore Co., Ill.							5.70	2.00						
Gold ore	Baguio G. M. Co.														1.16
	Benguet			2.38	0.85										
	Bernheim, So. Rhodesia	1.26	0.35			0.87	0.37			0.79	0.47				0.56
	Buffalo Ankerite											1.70	1.41		
	Butte Highlands									3.13	1.83				1.81
	Butters, Nicaragua									0.39	0.22				
	Canadian Malartic											1.44	1.13		
	Cline Lake							2.29	1.25	1.92	1.29				1.22
	Dahlonega, Ga									1.58	0.82				
	East Malartic	5.42	2.05			3.70	1.40	3.14	1.83	2.49	1.70	2.13	1.78		1.60
	Getchell									1.54	0.91				
	Golden Rose, B. C					3.77	1.53			2.52	1.47	2.03	1.51		1.42
	Homestake	3.95	1.40			2.95	1.33	2.55	1.37	1.96	1.30				1.26
	Kelowna, B. C					1.37	0.65	1.24	0.68	1.01	0.68	0.86	0.67		0.76
	Kerr-Addison	2.20	0.72	2.17	0.81							1.32	1.08		1.15
												1.57	1.24		1.18
	La Luz, Nicaragua	3.36 2.48	1.10 0.75	2.95 2.08	1.11 0.75	1.86	0.76	1.55	0.78	1.30	0.82				
	Little Long Lac	2.73	1.10	2.35	0.77	1.83	0.76	2.32 1.49	1.04 0.76	1.15	0.78	1.08	0.89		0.90
	Madsen Red Lake							1.73	0.70	1.52	0.81				
	Minnesota Mines, Colo.							2.42	1.04			1.37	1.06		
	Noranda					1.47	0.66			1.08	0.76				0.83
	Parcoy, Peru							2.39	0.75			1.50	1.09		
	Picacho, Ariz					2.96	0.93	2.26	1.05						
	Portland G. M. Co.	1.97	0.58			1.64	0.60			1.26	0.71				1.04
	Powell Rouyn											1.23	0.98		0.96
	Preston East Dome											2.01	1.75		1.78
	Red Cross	20.9	5.59												
	Rochester-Plymouth									1.86	1.18				1.14
	Round Mountain, Nev.					1.96	0.68								
	San Luis, Mex.	2.90	0.60	2.50	0.64	2.12	0.59			1.41	0.70				0.69
	Sta. Maria del Oro							2.31	0.77	1.58	0.72				0.98
	So. Am. Dev. Co., Ecuador					4.08	1.58	3.02	1.53	2.44	1.54				1.32
	Springs Mine, Rand	3.22	0.74	2.40	0.67	1.98	0.71	1.72	0.77	1.32	0.82	1.12	0.86		0.86
	Wright-Hargreaves	1.34	0.46			1.24	0.55			0.98	0.60				0.77
	Zeibright									1.15 1.75	0.78 0.99				

Table 44. Grindability based on dry ball milling (*After Bond and Maxson, 153 A 362*) a—*Continued*

Material	Source	Grams per revolution and grams <200-m. per revolution in product												
		Mog, 28	<200, Gm.	*Mog*, 35	<200, Gm.	*Mog*, 48	<200, Gm.	*Mog*, 65	<200, Gm.	*Mog*, 100	<200, Gm.	*Mog*, 150	<200, Gm.	*Mog*, 200
Galena	Eagle Picher					13.5	0.51							
Galena sinter	Eagle Picher	4.01	0.85											
Garnet	Georgia					2.40	0.85							
Granite	Picacho, Ariz.							1.88	0.74					
Graphite	Alcoa, Tenn.			0.24	0.061									
Graphite (ore)	Congdon Co.					9.26	2.28							
Graphite conc.	Long Valley, N. Y.											0.31	0.15	0.23
Gravel	Pacific Coast Aggregates	1.58	0.40	1.28	0.36									
Ilmenite	Krebs Pigment Co.													0.92
	Vanadium Co. of America													1.08
Iron, cast	Crucible Steel Co.			0.611	0.015									
	Dupont			0.062	0.005									
	Miami Copper Co.							0.044	0.013					
Iron ore	Alan Wood, Croton			5.35	0.87	4.34	0.94	2.86	0.89					
	Alan Wood, N. J.							4.15	1.52					
	Bowring, Belmonte, Spain			3.03	0.63									
	Bowring, Keradid, Morocco			2.97	0.74			1.94	0.71	2.66	1.31			
	Inland Steel, Wis.					6.04	1.83					2.09	1.32	
	Iron River Falls, Wis.									2.72	1.60	1.92	1.49	
	Marquette, carbonate									2.50	1.98			
	Moose Mountain, Ont.							2.33	1.26			1.69	1.38	1.23
Langbeinite	Union Potash, N. M.											1.61	1.24	
Lead ore	Callahan, Idaho											1.81	1.09	
	Montecatini, Italy					2.69	0.84	2.39	1.02					
	Monteponi, Italy													1.39
Limestone	Lawrence Cement, Pa.											1.87	1.43	1.70
	H. J. Kaiser, Calif.							3.12	1.42					1.26
Magnesite	N. W. Magnesite Co., Wash.							3.37	1.30	2.41	1.21			
Magnetite	M. A. Hanna, Clifton, N. Y.	4.57	0.68											
	Republic Steel, Chateguay	6.26	0.55	4.70	0.58									
Magnesium	Basic Refractories, Ohio					5.46	2.64			4.12	2.55			1.68
	Basic Magnesium, Nev.							4.27	2.30			2.86	2.28	

Manganese ore	General Manganese, S. D.									1.71				1.14
	C. L. Walfred, Minn.							2.30	1.17	1.83	1.10			
	L. G. Aguilar, Cuba													1.94
Mineral wool	Mineralite Corp.													0.68
Nickel ore	Brit. Col. Nickel Mines											1.61	1.15	
	Falconbridge									2.40	1.43			
	Nicaro											{3.48 5.55	{2.57 4.80}	
Phosphate	Al-Ke-Me, Brazil					2.41	0.79			1.36	0.84			
	Charleson Mg. Co.	8.87	1.27											
	Int. Ag. Chem. Co.									2.26	1.07			
	Ipanema, Brazil							2.26	0.97	1.47	0.88			
Pyrite (cone.)	Balmat							21.7	6.65					
Quartz	Calif. (pure crystalline)	4.55	0.77			2.72	0.74			1.52	0.81			0.88
	Canadian Silica Prod.	3.58	0.42											
Quartz, fused sand	Illinois											1.02	0.65	
Rutile	Titanium Corp.													0.62
Salt	Dupont									3.48	1.56			
	Mines D de P, France							2.68	0.62					
Sea shell	Calizos, Chile							1.64	0.72					
Serpentine	G. E. Baker Co. Pa.							2.25	1.45					
Shale	Korite													{0.59 0.86}
	St. Lawrence Brick					3.50	1.40							
Siderite	Michigan									2.50	1.47			
Silicon carbide (75–25)	Electro Met. Co., N. Y.							4.17	1.41	2.95	1.39			1.08
Silver	Carlota, Chile									1.51	1.09			1.04
	Real del Monte					2.00	0.92	1.53	0.70	1.23	0.70			0.72
	Tonopah Mg. Co.									1.54	0.96			
Spodumene	Solvay Process					3.15	0.73							
Syenite, nepheline	Canadian	5.51	0.92											
Tin	Tainton product, Bolivia									1.80	0.94			
	Pittsburg Plate Glass, Mex.									{2.23 2.34}	1.24 1.33	1.68 1.78	1.26 1.36}	
Tripoli	Western Minerals, Kan.					12.33	10.1							
Tungsten	Nevada-Massachusetts, Nev.							2.69	1.00					

a For procedure see Sec. 19, Art. 11.

Table 45. Grindability based on dry rod milling (*After Bond and Maxson, 153 A 362*) a

Material	Source	Grams per rev. and <200-m. in product																					
		Mog	Gm.	Mog	Gm.	Mog	Gm.	Mog	Gm.	Mog	Gm.	Mog	Gm.	Mog	Gm.	Mog	Gm.	Mog	Gm.	Mog	Gm.	Mog	Gm.
		3		4		6		8		10		14		20		28		35		48		65	
Alumina	Exolon Corp., N. Y.													5.19	0.56								
Barite	Barium Mg. Corp., W. Va.													59.5	9.34								
	United Pigment, N. J.																	21.0	7.80				
	United Pigment, Tenn.																	73.4	29.3				
Bauxite	Republic Mg. & Mfg. Co., Ark.			37.0	6.50																		
	Porocel Corp., Ark.													21.27	4.18								
Brick	Carhart Refrac., Inc., Ky.									2.65	0.44			2.57	0.53								
Calcite	New England Lime Co., Mass.					133.6	5.36																
Cement clinker	Volunteer Cement Co., Tenn.	29.3	0.83	26.2	0.70					13.03	1.00												
Chrome ore	Tekirova Madenleri Co., Turkey									37.40	4.40												
Chromium metal	Electro Met. Corp., N. Y.															1.90	0.057						
Copper ore	Copper Range, amygdaloid																			2.00	0.98		
	Copper Range, sandstone																			3.73	1.47		
	Morenci, Aris.													14.98	3.56	11.98	3.46	6.45	2.56	4.89	2.20		
	Utah Copper Co.													9.90	2.49	7.93	2.47	6.62	2.35	5.43	2.36		
Cryolite	Pennsylvania Salt, Pa.																			13.93	5.25		
Dolomite	New England Lime Co., Conn.					319.0	7.63																
Feldspar	Golding Keene Co., N. H.											14.9	2.06	13.34	2.18								
	Consol. Feldspar Corp., Tenn.													16.36	2.37								
Ferrosilicon	Pittsburg Metal Co., N. Y.															20.92	2.17	13.68	2.33				
Ferrosilicon 50/50	Electro Met. Corp.																					2.92	1.14
Fluorspar	Kinetic Chem. Co., N. M.											11.15	1.63							5.40	1.65		
Glass	Corning Glass Wks., N. Y.									14.15	0.73												
	Pittsburg Plate Glass, Pa.															4.97	0.52						
Gold ore	Mineral Mg. Corp., S. C.																	7.09	3.87				
	Seal Harbor G. M., Nova Scotia																			4.66	1.88		
Granite	W. A. Burton, Tex.	31.6	0.87																				
Graphite	U. S. Graphite, Mich.													2.22									
Gravel	Warner Co., Pa.			22.2	1.27																		
	Material Service Corp., Ill.					22.2	1.90																
	Dravo Corp., Pa.									11.64	1.51												
Gypsum	Diamond Crystal Salt															7.77	3.23						
Iron ore	Charleson Mg. Co., Minn.					25.2	2.32																
	M. A. Hanna Co., Clifton, N. Y.															9.30	1.39						
	Mosan, Japan													4.20	0.85								
	Republic Steel, N. Y., Harmony													18.60	1.34			9.43	1.66				

| | | |

Grindability ratings made by a number of different investigators using different methods of determination are given in Tables 44 to 47.

Mortensen (*131 J 225*), on the basis of laboratory ball-mill tests, lists the following relative grindabilities: Quartz, 1; miscellaneous pyritic ores, 2.5 to 4; gabbro, 2.7; fine-grained granite, 3; magnetic

Table 46. Data on crushing resistance by scleroscopic determination (*After Dean et al., RI 3223*)

Mineral	Specific gravity	Hardness	Weight of material crushed per unit of work, grams *a*	Scleroscope data for mineral section, 1.2 in. thick		
				10-in. drop; energy absorbed, inches rebound	6.37-in. drop; energy absorbed, inches rebound	2.75-in. drop; energy absorbed, inches rebound
Quartz	2.65	7.0	1.0	2.73	1.32	0.45
Pyrite	5.0	6.2	2.39	3.36	1.60	0.62
Sphalerite	4.0	3.7	4.65	3.43	1.59	0.58
Calcite	2.7	3.0	4.44	3.72	1.83	0.69
Galena	7.5	2.6	14.60	7.96	4.85	2.11

a From *RI 2948*.

iron ores, 3 to 4; soapstone, 8. Gow *et al.* (*loc. cit.*) report chert three times as difficult to grind as dolomite (moderately hard), and Bond and Maxson (*134 A 296*) report this same chert the most difficult to grind of all the ores listed in Table 44. Coghill and deVaney (*CEG*) state that this chert requires 28 hp-hr. per ton to grind from 6-m. to flotation size. Kuzell and Barker (*IC 6343*) state that the grind resistance of the southwestern copper ores, in increasing order, is: UNITED VERDE massive sulphide, UNITED VERDE schist, COPPER QUEEN, INSPIRATION, NEVADA CONSOLIDATED (McGill), MIAMI, MOCTEZUMA, NEW CORNELIA. Traylor Eng. & Mfg. Co. rates comparative grinding resistances

Table 47. Laboratory wet-rod-mill grinds of various Canadian ores (<10-m. samples) *a*

Time of grind, min.	Ore	Microns							
		80	56	40	28	20	14	10	<10
8	Lake Shore	19.1	22.0	13.0	8.4	6.2	5.5	4.7	21.1
35			0.5	5.4	14.4	13.5	13.1	11.5	41.6
35	Lake Shore quartz		1.6	17.5	21.6	15.2	12.6	9.0	22.5
8	Toburn	17.9	23.2	12.0	8.5	4.8	6.0	4.6	23.0
35			0.7	6.0	14.7	13.0	11.8	9.9	43.9
8	Sylvanite porphyry	10.9	21.9	14.4	9.7	7.3	6.6	5.9	23.3
35			0.4	4.6	14.0	15.2	13.8	12.5	39.5
8	Sylvanite conglomerate	8.8	22.8	12.9	9.0	5.4	6.5	5.9	28.7
35			0.5	3.3	10.9	12.1	12.4	12.3	48.5
8	Lake View and Star	2.2	13.2	15.5	12.5	11.8	12.2	10.4	22.4
35			0.2	2.1	9.9	15.0	19.0	16.1	37.7
8	Beattie	14.0	21.1	13.2	8.8	6.9	6.4	6.4	23.2
35			0.6	3.5	12.5	14.6	16.1	14.0	38.7
35	Omega		0.4	2.9	12.3	15.6	14.5	14.7	39.6
8	Siscoe	4.1	21.5	17.3	12.5	7.0	11.5	10.1	16.0
35			0.2	6.6	18.5	15.4	17.3	15.4	26.6
8	Kerr Addison	3.3	18.2	17.4	13.2	9.7	7.8	8.4	22.0
35			0.2	2.1	13.4	17.8	17.1	14.6	34.8
8	Hollinger	3.7	15.0	13.5	11.4	8.4	9.9	9.3	28.8
35			0.1	1.8	9.3	15.2	17.2	15.6	40.8
8	Elkton, Cripple Creek	10.7	20.5	14.5	9.5	7.0	6.2	5.4	26.3
30			0.5	3.4	11.5	12.9	13.0	10.5	48.2
8	Negus		60.9	8.5	7.8	6.3	5.5	4.7	6.3
30			1.6	17.9	21.7	15.2	19.1	11.5	13.0

a A 35-min. grind of <10-m. Lake Shore feed in a 12-in. laboratory rod mill yields a ground product of the same size and size distribution as the 3-stage plant circuit.

of various well-known ores as follows: CALUMET & HECLA, 1.33 (most resistant); PORTLAND, 1.00; NEW CORNELIA, 0.92; GOLDFIELD CONSOLIDATED, 0.79; MIAMI, 0.70; HOMESTAKE, 0.63; MORENCI, 0.51; COPPER QUEEN, 0.46; UTAH, 0.38; RAY, 0.37. ROAN ANTELOPE lies between MIAMI and COPPER QUEEN (C. F. Thompson, *PC*).

Warning. Grindability data must be used with discrimination and caution. Thus Table 47 indicates relatively little difference between HOLLINGER and SYLVANITE conglomerate ores in grinding from 10-m. to 200 *mog* (35-min. grind) although considerable difference is shown on the 8-min. grind. Rodgers (*40 CIMM 329*) compares operating data in Table 50. This points up the practice of Bond and Maxson (*134 A 296*) to make grindability tests to the *mog* to which the mill is to operate.

Size of feed has an important effect on grindability when the *mog* is very fine. Thus at LAKE SHORE (*LS*) sands sized substantially to the micron ranges shown in Table 51 were ground in a laboratory batch mill for 20 min. at best pulp densities under otherwise constant conditions. The increasing resistance to further reduction with decrease in feed size is striking.

Capacity formula. It follows from the fact that net power draft varies as mill diameter raised to the 2.6 power (Art. 15) that the capacities of different mills under analogous conditions would follow the same variation. This has been confirmed by Gow *et al.*, Fahrenwald, and the staffs at HOLLINGER and at LAKE SHORE. Mine & Smelter Supply Co. (*PC*) interpolate on the assumption that the variation is as D^3 in setting up their catalogue figures for mill sizes for which actual performances are not available. Bond (Allis-Chalmers Co., *PC*) states that commercial grinding results tabulated by him show that capacity varies as $D^{2.2}$ when the mills are operated at speeds recommended by Allis-Chalmers (Art. 2), while the variation is as $D^{2.6}$ for mills operating at 80% of critical.

Table 48. Grindability of minerals *vs.* hardness and cleavage (*Based on data by Coe and Coghill, RI 3704*)

Material	Relative resistance to grinding *a*	Cleavage or fracture	Hardness, Mohs
Boghead cannel coal...	3.1	Conchoidal	2.5
Chalcedony.....	2.2	Conchoidal	7
Zircon.....	1.8	Conchoidal	7.5
Rutile.....	1.7	Uneven	6.5
Quartz.....	1.0	Conchoidal	7
Anthracite.....	0.88	Conchoidal	3
Topaz.....	0.78	*b*	8
Chalcopyrite.....	0.51	Uneven	3.5
Siderite.....	0.46	Prominent	3.5
Limestone.....	0.44	Prominent	3.5
Sphalerite.....	0.31	Perfect	3.5
Talc.....	0.21	Perfect	1
Bituminous coal.....	0.18	Prominent	2.5

a Dry grinding in a laboratory roller mill in closed circuit with an air classifier. Relative grinding resistances are net hp-hr. per cu. ft. of solid from <3-m. to 48 *mog* (trace to 3.2% on 48-m.).

b Basal cleavage perfect. Fracture subconchoidal to uneven.

Table 49. Effect of silicate content of International Nickel ore on grinding resistance in rod mills (*After Rose*)

Silicate in ore, %.....	49.2	50.7	53.7	55.7	57.2	60.2
Hp-hr. per ton of new feed.....	1.31	1.35	1.39	1.42	1.44	1.56

Change of mill capacity. Reduction is effected by reducing power draft. The usual methods are by reducing mill diameter by inserting wooden backing between shell and liner (Fig. 16); reducing length by inserting a false discharge head or grate (*87 A 75*); reducing ball load without other change (30% charge is about the limit, *112 A 45*); change to a lighter medium, *e.g.*, pebbles; or reducing speed. Which of these is the most economical is not established; it is probable that over a long period the first is, provided the reduced diameter is sufficient to reduce the coarsest feed particles. Increase is usually possible by increasing charge or speed or both, especially if the mill has been bought on a noncompetitive basis. If the mill is of overflow type, it can always be changed to grate type to hold a larger tumbling load, although a larger motor will usually be necessary. Increase in classifier capacity to tolerate larger circulating load also is effective (Art. 12). Liners with more lifting effect increase capacity in primary mills: use of thinner liners is effective in both primary and secondary mills, but

Table 50. Comparison of grinding at Hollinger and Sylvanite (*After Rodgers*)

Mill	Tons new feed per hp-hr.	Sizing			Liner life, days *a*
		Feed	Product		
		% <48-m.	% >48-m.	% <200-m.	
Hollinger.....	0.153	23.2	2.0	6.2	297
Sylvanite *b*....	0.65	15.0	66.4	49.7	170

a Manganese steel.

b Feed averages about 20% of the conglomerate and 80% of the porphyry.

Table 51. Resistances of fine sands to further reduction (LAKE SHORE)

Size of feed, microns.....	40~56	28~40	20~28	14~20	10~14
% of size in feed.....	89.3	93.4	84.7	87.0	76.0
% of size remaining.....	18.1	32.8	51.2	60.4	76.4

will increase liner cost on account of increased discard percentage. Some gain can usually be obtained by simple increase in the alertness and skill of the operator.

Flow capacity. In buying a mill, its capacity as a conveyor must always be investigated, particularly if high circulating loads and/or coarse feeds are contemplated. Feeder must be of proved ample capacity, and preferably should be capable of building up some head against the feed trunnion. In a grate mill the feeder must be capable of passing the largest renewal ball. The feed trunnion should be of such diameter as to receive a trunnion liner with a definite flare toward the mill shell, or to permit of spiral rifling at least 5/8 the depth of the largest feed particle. Grate openings should be as large as is consistent with holding back the smallest ball desired in the charge, and the total area of working opening (30 to 40%, usually, of the total area of opening) should be at least twice the working cross-section of the feed trunnion. Since the latter figure is difficult to determine, it is usual to make the working total opening of the grate at least equal to the cross-sectional area of the feed trunnion. The capacity of the discharge elevator in a grate mill must be sufficient to keep the pulp level between the grate and the discharge head down to the periphery of the perforated portion of the grate diaphragm. In overflow mills the discharge trunnion should be large enough to allow for a larger drop than it is contemplated to use. Excess drop can then be taken up by a suitable annulus or spout (*e.g.*, Fig. 44), which may be changed cheaply as the occasion demands.

Purchase of a mill. Large companies usually have past records available and/or opportunity for testing that make selection of the right mill a virtual certainty. The purchaser for a small mill, however, will do well to consult with at least two reputable manufacturers, submit representative samples of the material to be ground, and check estimates both against each other and against published and otherwise available data. His danger will not, in general, be under-capacity, but rather the reverse, which entails a continuing charge because of inefficient use of power; the mill recommended will almost certainly do the job, but not in the most efficient fashion. However, if the operation is successful, his first and early demand will be for increased capacity, and this his seller will be able to pull out of a hat.

15. POWER

Definitions. Net power draft of a tumbling mill is the rate at which work must be done on the tumbling load by the shell in order to maintain the center of gravity of the load in a position of kinetic equilibrium out of the vertical plane through the axis of rotation of the shell. TOTAL POWER is net power plus friction and transmission losses. Net power is not capable of analytic determination because of present ignorance of the internal dynamics of the tumbling load.

Theoretical power draft. Gow *et al.* (*112 A 27*) indicate the elements of an analytic attack, pointing out that power P varies as the ball load, which in turn varies as the square of the radius r for a given shell length; that power likewise varies as the torque arm, which varies as the radius times a function of the angular displacement of the center of gravity of the load; and that it varies as the critical speed, which is an inverse function of the square root of the radius; whence it follows that $P \propto \frac{r^3}{\sqrt{r}} \propto r^{2.5}$.

Experimental determinations of power draft. Gow *et al.* (*87 A 51*) and Fahrenwald and Lee (*A TP 375*) have shown experimentally that for small laboratory mills working under similar conditions power varies nearly as $D^{2.6}$, where D = internal diameter of mill. Gow *et al.* (*112 A 24*) showed that this relationship held as between a 2×2-ft. laboratory mill and a 6×4-ft. commercial mill. Finally the Hollinger Mill Staff (*HS*) and the Lake Shore Staff (*LS*) have demonstrated the applicability of the same variation to large ball and tube mills operating in the respective plants. Hence, if the net power draft of a mill of one diameter operating under given conditions on a given ore is known, the corresponding figure for any other mill of the same length but of different diameter, operating under the same relative conditions, can be estimated. Differences of length may be taken care of by the equation

$$\frac{P_1}{P_2} = \frac{D_1^{2.6} L_1}{D_2^{2.6} L_2}$$

where P, D, and L are power, diameter and length of mills 1 and 2 respectively. Gow *et al.* (*ibid.*) showed that if the net power consumed by a 2×2-ft. laboratory mill with which they worked were represented by p, the net power for any large mill operating under analogous conditions was closely approximated by the equation

$$P = \left[\left(\frac{L}{2} - 1\right) K + 1\right]\left(\frac{D}{2}\right)^{2.5} p$$

where K = 0.9 for a mill length less than 5 ft. and 0.85 for length greater than 5 ft. P is horsepower, D and L are stated in ft., and p = 2.2.

Hancock (*112 A 77*) proposes the formula $HP_N = 0.00078 C^3 L \delta n$ for net horsepower where C = length in ft. of the chord defined by the surface of the mill charge (tumbling media plus pulp) at rest, δ = mean specific gravity of charge, L = inside length in ft. and n = r.p.m.

Friction loss was determined by Gow and Guggenheim (*133 J 632*) by packing the ball load of a 6×4-ft. mill in balance around the mill axis. They found that the power-speed curve was a straight line passing through the origin, and that for 80% of critical speed the loss was 11 hp. as against an operating consumption of 87 hp. Hence the percentage loss was 13. Motor efficiency in the particular case was 90%. Thus net power was 0.9 × 0.87 = 77% of power input. They assert that dead load, being primarily the result of friction, is proportional to speed. Martin (*25 Cer S 63*) says that speed varies as $n^{1.5}$ where n = r.p.m., and tests on laboratory mills by Coghill *et al.* (*112 A 82*) indicate that friction increases faster than speed. Coghill (*87 A 77*) asserted the belief that net power in some small old-type ball mills is as low as 50% of input. Stroup (*87 A 77*) asserted that similar dead-load tests which he had made by symmetrical packing of liners weighing the same as the ball load showed not over 5 to 6% dead-load loss.

Coghill *et al.* (*112 A 80*) applied the formulas of Gow *et al.* (*loc. cit.*) to the dead-weight figures from the catalogues of several manufacturers and concluded that friction losses allowed for would range from 11 for an 8×5-ft. mill to 40% with a 3×5-ft. mill. Maxson (*112 A 85*) pointed out that in order to minimize dead-load losses the ratio of dead load (shell, liner, gear, and feeder) to live load should be a minimum. Roller bearings on countershaft and trunnions have not saved power as against ordinary bearings of good design, but have some advantages in lubrication and care (*87 A 76*).

Unbalance of the mill causes power peaks that increase total power; Gow *et al.* (*112 A 27*) report a mill in which a 20% jump in power was indicated by a meter each time the single-scoop feeder dug; at another mill there was a perceptible jump as the belt splice slapped the motor pulley; rod-mill power consumption is less smooth than that of a ball mill; a single manhole in the shell of a small mill produces perceptible unbalance.

Starting usually causes a short, high peak but Gow *et al.* (*ibid.*) assert that if the load is not packed, and if provision is made for slow acceleration, operating speed may be reached without exceeding maximum operating power (see also Sec. 20, Art. 7).

Controlling variables. The net power draft of a tumbling mill is due to the braking action of the load applied to the interior of the shell, not to the grinding work that the mill is doing at any instant except in so far as the conditions under which such work is being done affect the braking power of the load. Thus net power is affected by various operating conditions. It increases with tumbling charge up to 50% of mill volume and then decreases (Fig. 77), except that with interstitial loading of relatively large volume the maximum point in power draft may be reached before the actual load of medium reaches the centerline. Effects of variations in interstitial filling are shown in Table 52. With a given tumbling load power is a maximum with an interstitial load that just fills the interstices (*112 A 27*). It is higher with coarse sand than with fine (Table 52). It is higher for low discharge than for high (Table 5). In a grate mill, a drop in power draft indicates clogging of grates. Power increases with decrease in pulp density (Table 52). It increases with the lifting effect of the liner. It increases with liner wear (increase in mill diameter), provided the surface of the liner does not change to the extent of increasing slip materially (Table 53). It decreases slightly with increase in feed rate (Table 52). It increases with speed up to the point that cataracting begins, then drops (*112 A 27*). It is higher with hard ore than with soft, and higher with ores of high specific gravity.

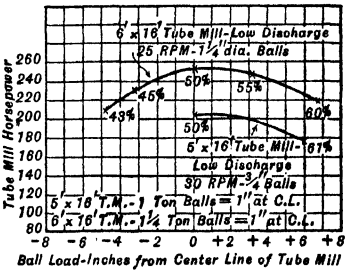

FIG. 77. Power *vs.* ball volume at LAKE SHORE.

Shape of tumbling bodies affects net power consumption per ton of tumbling media both by its effect on the length of the lever arm and on the internal friction of the load. Thus rods, which weigh more per unit volume of load than balls, can be loaded into a mill of smaller diameter than balls for the same weight of tumbling charge per foot of mill loaded to a given percentage of mill volume, and therefore require less net power per ton for tumbling. Shapes that tend to maintain large contact area per unit weight of charge will, if slippage against the breast of the mill is prevented by suitable liners, tend to ride higher in the mill than otherwise and thus increase power consumption. On the other hand, shapes which key and tangle consume less energy in internal friction in the mass than those with which relative motion is high, and net power consumption is relatively low despite possible high lift on the breast of the mill.

Shape of lining has marked effect on net power consumption in that roughness of a type that promotes lift of the charge tends to increase internal movement, internal friction, and consequently net power consumption.

Table 52. Effects of differences in the condition of the mill interior on power draft of ball mills (*after HS*)

Line No.	Mill conditions	Power draft, hp.	
		Hollinger	Lake Shore
1	Size of mill, inside diam. × length, ft	6 1/2×14 1/2	5×16
2	Discharge height (grates clean)	Peripheral	.....
3	Ball size, renewals, in. (seasoned loads)	3	1 1/4
4	Empty mill	60	.....
5	Balls only, 50% mill volume, dry	358 *a*	20[illegible]
6	After addition of a moderate flow of water	362 *b*	21[illegible]
7	After draining mill	372	20[illegible]
8	After raking in enough sand for discharge to start	422	233
9	Pulp density in preceding test, % solids	(50)	(70)
10	After water was cut off and contents had ground down	404 *c*	193 *d*
11	After flushing out to cloudy water, no grit	377	.....
12	Regular mill *g* and classifier feeds started	422 *e*	.....
13	When classifier was depleted of sand *i*	412	.....
14	Fair amount of return sand running	402	.....
15	Larger rake load	397	.....
16	Full rake load	386 *f*	.....
17	Normal running *h*, 300 tons per 24 hr., 66% solids		231
18	435 tons, 70% solids		225
19	435 tons, 74% solids		223
20	620 tons, 73% solids		220
21	620 tons, 75% solids		214

a Clouds of iron rust discharging.
b No grit detectable in discharge.
c Discharge of creamy consistency.
d Discharge substantially stopped, highly viscous.
e Maximum gradually attained.
f Checked at 1 1/2 and 6 1/2 hr. later.
g 1% on 3-m.
h <20-m. sands.
i I.e., after shutdown charge had been raked out and before return had begun to build up.

Table 53. Variation of power consumption with liner wear in ball mills at Lake Shore (*LSS*)

Size of mill, diam. × length	Discharge	R.p.m.	Horsepower consumed			Increase in hp., total %	
			Liner new *a*	Liner 1/2 worn	Liner fully worn *b*	Experimental	By $D^{2.6}$ *c*
7×6	*O*	24	149	164	178	19.4	21
6×16	*O*	25	230	258	287	25	27
6×16	*L*	25	260	292	325	25	
5×16	*O*	30	155	182	210	35	33
5×16	*L*	30	174	204	235	35	

a 3 1/2 in. thick. *b* 3/4 in. thick for 7-ft. mill, 1/2-in. thick for others.
c $P_1/P_2 = D_1^{2.6}/D_2^{2.6}$ *O* Overflow-type. *L* Low-level.

Pulp level in a continuous mill is a function of relative diameters of feed and discharge openings, of length, and of pulp viscosity. The higher the level, all other things being constant, the less the net power consumption, since high level lowers the density of the charge, shortens the lever arm, and lubricates a higher percentage of the total surface of the tumbling media. Hence, all other things being equal, net power consumption per ton of tumbling charge in open-end mills is higher than in overflow types, is higher in short mills than in long, is higher with coarse feeds than with fine, with hard and angular pulps than with the reverse, and is a minimum with pulps of maximum lubricating capacity, which normally corresponds to an intermediate pulp density. If, however, the pulp is so dense as to constitute a thick paste, the effect is to prevent internal movement of the charge and to lubricate the breast of the mill, whereupon power consumption drops sharply (*11 A 37*).

Maximum power was drawn in laboratory mills (*11 A 35*) when the volume of pulp in the mill was just sufficient to fill the interstices in the tumbling media with the mill at rest. The quantity of pulp for maximum power draft increased slightly with increases in ball load and r.p.m. of mill when using ribbed liners. With smooth liners at high speeds—90 to 100% of critical—however, power draft was minimum with the pulp load equal to the interstitial volume.

Power per ton of tumbling charge is greater, all other things being equal, with rods than with balls, and greater with balls than with pebbles; it increases with diameter of mill, is higher in cylindrical than conical mills, is higher in short than in long mills, is higher with rough than with smooth liners, and with low than with high discharge. For power consumption under various conditions of practice see ***Power consumption*** in Arts. 7 to 11.

Cost of power is from 50 to 60% of grinding cost in the majority of plants, and grinding power exceeds 50% of total power at many mills. For purposes of rough estimate a price of 1¢ per kw-hr. is safe.

16. PULP DENSITY

Pulp density affects time per pass, internal friction of load, load friction at liner surface, and the buoyant and spreading effects of the pulp on the tumbling media. Through these primary actions it influences capacity, grind, and power consumption.

The operating requirement is flow of solid over the surface of the tumbling media; the desideratum is uniform flow over all of the surface. This is best met by a pulp thick enough to maintain substantial homogeneity and thin enough to flow readily under a relatively small head.

Perfectly dry rock, when ground fine, is surprisingly fluid, flows readily through a cylinder mill, and has great transporting power. When the moisture content is between 8 and 15%, or thereabouts, especially if the solid contains clayey matter, a stiff mud is formed that cannot be forced through the mill and effectually prevents operation. With upward of 20% moisture, ordinary pulps are sufficiently fluid to pass through the mill readily, the fluidity increasing with increase in moisture content. For a given moisture content the apparent wetness is greater the coarser the solid particles, and viscosity is correspondingly lower.

Operation is guided by the appearance and feel of the pulp. As a first approximation, it should look and feel like molasses. From this starting point, the requirements of the operation and the character of the ore determine whether the molasses shall be thick or thin. The range is normally between 60 and 80% of solids, trending generally toward the higher figure for coarse granular feeds and high circulating loads and *vice versa*. Table 54

Table 54. Pulp densities from Tables 25, 30, 32, 33, and 34

Mill	*Mog*														
	3~10			14~20			28~35			48~65			<65		
	Percentage solid *a*														
	H	*L*	*A*	*H*	*L*	*A*	*H*	*L*	*A*	*H*	*L*	*A*	*H*	*L*	*A*
Rod	78	60	67	75	66	72	73	65	69	..	..	66	..	..	..
Overflow ball	75	50	66	..	..	..	86	65	76	86	68	76	..	..	..
Conical ball	83	40	68	78	68	74	80	66	76	80	50	75	77	70	74
Grate ball	83	78	80	76	65	71	81	70	75	85	70	76	78	64	73
Tube	..	..	..	..	..	..	..	..	..	80	60	70	78	60	70

a *H*, Highest figure; *L*, lowest figure; *A*, average.

summarizes reported data. The relatively low averages for the rod mill are because it usually operates as a primary, frequently in open-circuit, and hence the mill feed, although coarse, carries a relatively high percentage of primary slime and requires a correspondingly large amount of water to give the desired fluidity. The high figures and the relatively high averages for the ball mills in fine grinding correspond to high circulating loads and mill feeds from which slime has been removed by feeding the circuit through the classifier. The lower average for the tube mills is because the pulp in the mill averages uniformly fine, a lower percentage of solid produces the desired molasseslike consistency, and with the smaller (and sometimes specifically lighter) tumbling media, transport effect must be kept down to prevent excessive rejection of media in overflow mills, or clogging in grate mills. On the basis of available fall through the mill, it should be possible to carry thicker pulps in a grate mill than in an overflow mill; tendency to clog grates with thick pulps militates against such practice, however, and Table 54 indicates no such trend.

In considering the reported figures it must be borne in mind that the averages contemplate ores of average specific gravity. In a particular case, with an ore of nonaverage specific gravity, comparative volumes should be considered.

Departure from optimum density conditions has considerable effect on grind and capacity. Table 55 shows that while high moisture content will maintain rapid flow through

an overflow mill and cause greater reduction of 3/8-in.~10-m. sizes from 3/8-in. feed in a single-pass operation than will occur with a thicker pulp, the latter causes more production of the desired fine sizes with less power per ton. Table 56 tells a similar story for closed-circuit operation in a grate mill on a similar feed. Table 57 shows the importance, in fine grinding, of close control of density. Feed rate was constant. There is a definite optimum in production of <325-m. at 63% solids; below this figure the balls were not well coated; above it the small balls were cushioned; further increase caused them to float to the grates and clog them, whereupon both capacity and grinding fell off sharply.

Table 55. Effect of high moisture content on grinding in a conical ball mill, open-circuit (*66 A 105*)

Solids, %	34	52
Feed, t.p.h. *a*	10	7.9
Product:		
Mog	4	6
% >10-m.	14.3	4.8
% <48-m.	43.7	64.5
% <200-m.	17.5	26.5
Production, t.p.h.		
<10-m.	6.8	6.1
<48-m.	4.4	5.1
<200-m.	1.8	2.1
Tons per hp-hr.:		
Feed	0.19	0.15
Produced:		
<10-m.	0.13	0.12
<48-m.	0.085	0.099
<200-m.	0.035	0.041

a <3/8-in.

Pebble loads require thinner pulps than ball charges.

Maxson (*134 A 319*) states that critical (optimum) pulp density, ball size, and mill speed are interdependent.

At Asturiana de Minas (*115 J 396*) when a 4.9-ft. (diam.) conical mill with 2-ton ball load was fed with <2-in. feed at the rate of 50 tons per 24 hr., the product with 70% solids contained 1% >2-mm., 83% <40-m., and 17% <200-m.; while with 50% solids the corresponding quantities were trace, 92%, and 28%. The experimenter found that decrease in solids to 20% caused further increase in fineness of discharge, and that progressive thickening above 70% solids caused production of a progressively coarser product until grinding ceased altogether. At Catemu (*125 P 886*) a 4 1/2-ft. × 16-in. conical mill was operated over the range of 60 to 80% solids. The best results were obtained at about 65% with soft, clayey ore and 70% with hard, compact ore. When solid content rose above 70%, the mill discharged much coarse material.

Table 56. Effects of variation in pulp density on operation of 7×10-ft. ball mill at Sylvanite (*41 CIMM 302*)

Test No.	1			2			3		
Solids, %	79			81			83		
New feed, tons per hr.	19.2			19.9			19.0		
Circulating load, t.p.h.	49			46.5			43.8		
Sizings	% retained								
Mesh	NF	MP	CS	NF	MP	CS	NF	MP	CS
3	2.0	.....	.....	1.0	.....	.....	5.0	.....	.....
6	39.0	.....	.....	34.7	.....	.....	43.0	.....	.....
10	18.7	6.3	4.4	23.9	4.9	8.0	19.0	4.3	5.6
20	11.7	8.0	9.4	14.1	9.3	13.5	10.0	8.3	12.0
48	11.8	34.5	44.6	11.7	36.9	45.9	9.5	34.0	46.2
100	.....	23.8	25.2	.....	21.9	19.7	.....	22.0	21.5
150	16.8	5.9	4.3	14.5	5.6	3.5	13.5	5.6	3.5
200	.....	3.8	2.9	.....	3.8	2.0	.....	4.4	2.4
<200	.....	17.7	9.2	.....	17.6	7.4	.....	21.2	8.8
Tons <48-m. produced per hr.	11.3			14.7			15.0		
Average power consumed, hp.	292								

Table 57. Effect of pulp density on grind with 1/2-in. balls (*LSS*)

Mesh	42	60	80	115	170	250	325	<325
	Percentages retained, weight							
Feed	1.3	1.7	5.7	19.0	20.3	36.0	9.5	6.5
Products								
56% solids	0.1	0.4	0.4	1.7	1.9	17.2	14.2	64.1
63% solids	0.1	0.2	0.2	1.3	2.2	14.7	13.5	67.8
66% solids	0.5	0.4	0.9	1.5	1.7	18.0	13.3	63.7
70% solids	0.3	0.3	0.6	2.3	2.1	20.2	13.8	60.4

The higher viscosity and stickiness imparted to the pulp by clayey slimes are frequently utilized intentionally. Thus at ANACONDA, when difficulty was encountered in getting coarse feed through a mill trunnion, a part of the mill discharge, which was definitely viscous, was cut back to the feed; this eliminated choking despite that the total tonnage passed through the feed trunnion was more than tripled. At ROAN ANTELOPE introduction of primary slimes to the finishing mills increased capacity and decreased steel consumption by causing better coating of balls. At BALMAT direct feed to the primary mills as opposed to introduction of new feed into the primary classifier increased capacity in the circuit and decreased steel consumption. If a high grind-per-pass is desired, pulp should be relatively thin, but under these circumstances there will be considerable overgrinding unless feed rate is correspondingly increased. In grinding Cornwall tin ores, where it is desired to free cassiterite but not round off the grains, dilute pulps are reported best. At ALASKA-JUNEAU (*IC 6757*) a thin pulp and high feed rate were employed to prevent overgrinding. Wartenweiler (*37 JCM 114*) reports that in grinding pyritic concentrate on the Rand to 90% <325-m. results were poor until the pulp in the mill was raised to 75 to 80% solids.

Power. Maxson *et al.* (*112 A 130*) state that the capacity of a given mill grinding wet is from 1 1/2 times to twice that in dry grinding. The difference is due largely to the greater volume of the dry interstitial solid corresponding to a given feed rate, and the consequent mass resistance to a sufficiently close approach of the grinding media to effect steel-particle-steel crushing systems. In general, the thicker a liquid pulp up to the point of stickiness, the higher the capacity. The controlling link here is the amount of in-load and load-shell friction. The higher the load center is maintained, the greater the torque, the greater the power draft, and, consequently, the greater the amount of grinding, up to the point that the tumbling media are forced apart to an extent that prevents steel-particle-steel grinding. If a pulp becomes unctuous before it becomes sticky, it lubricates the load, whereupon there is a drop in power draft and a fall in grinding.

Steel consumption is consistently lower with thick pulps (*IC 6757*).

Addition of water. In most cases water is added to the mill to bring pulp to the proper consistency. Commonly this water is necessary to make the classifier-sand return flow in the launder. Dowsett (*108 J 185*) recommends that, in conical mills, at least, as much of the new water as possible be added from the discharge end about 1 1/2 to 2 ft. back in the discharge cone. This increases the fluidity of the pulp in this part of the mill and lessens discharge of oversize.

17. EFFICIENCY

Unlocking. Since the function of fine comminution in an ore-treatment plant is to liberate the valuable mineral, the ultimate measure of performance is the extent to which such unlocking is attained, and the ultimate measure of efficiency is the relative over-all cost of such attainment. In the nature of things, however, it is impossible to set up either of these measures as an operating control. The existence of a correlation between the percentage ground through (or retained on) some key size and the metallurgical recovery has been pointed out (Art. 13). Furthermore, since power comprises upward of 60% of operating cost, and steel consumption, which makes up most of the balance, tends to parallel power consumption, the tonnage ground through the key mesh per unit of energy input makes a satisfactory substitute measure of efficiency. The key mesh may be the *mog*, but the releasing mesh, as indicated by deviation from the distribution line and confirmed by microscope, is more informative. Instead of dollars or power, the denominator of the efficiency equation may be mills or tons of tumbling charge.

Effective unlocking, from a concentrating standpoint, is measured by the money integral of recovery and grade of concentrate when the ground product is concentrated in the plant or in a correlated laboratory test. A similar measure applies to exposure for leaching processes. Such tests should be made for a series of grinds to determine both the key mesh and the percentage passing it that shows optimum return per unit of cost. This then represents optimum performance. Both deficit and excess in percentage of material passing the key mesh represent inferior performances. Deficit shows up directly, if the efficiency statement is in the form of tons produced through the key mesh per hp-hr. Excess should, if possible, be correlated with deficit in such a way that excess percentage through can be calculated as percentage retained on the key mesh and added to the actual percentage determined by sizing test.

Key-mesh efficiency has the disadvantage for comparative purposes that it is dependent upon the ore, both from the standpoint of grindability and that of dispersion of valuable mineral therein, but it is informative as to machines when applied to runs on the same ore, and as to ores when applied to analogous performances of the same machine thereon.

New surface produced would be, if it were determinate, the measure *par excellence* of effective performance in grinding many industrial minerals and products because their subsequent utility is a function of their specific surface. Correlation between surface and

value similar to that for liberation and recovery could then be set up. Actual surface of comminuted products cannot, however, be measured, nor the extent of approximation determined with certainty. But comparative measures of various behaviors of comminuted products can be made, on the basis of which approximations to specific surface that are relative between themselves may be founded (Sec. 19, Art. 17).

Several investigators have used such surface approximations as the basis for measuring grinding efficiency in ore-treatment plants. The method has no utility in such service. It gives the bulk of the performance credit to the sizes ground beyond the useful liberating sizes, in other words, to the wasted work. Coghill (*126 J 934*) attempted to escape this fault by artificial ascription to all material below the useful release size of the surface factor of the size below such useful size (Sec. 19, Art. 19). This reduces the credit for useless work but applies no penalty to that part of it which is harmful. Furthermore, as modified, the calculated new surface produced varies substantially directly with the percentage passing the release screen. Hence the method yields no more information than is obtained by using the weight passing key screen as the basis, and it involves an additional calculation.

Work of crushing. The researches of Martin, Gross and Zimmerley, Dean *et al.*, Owens, Andrews, and others (Sec. 19, Art. 11) have indicated that if the work that is done in crushing by deforming particles without producing break is disregarded, net energy input in near-frictionless simple crushing machines is proportional to new surface produced, as estimated by various methods of approximation. But since such ineffective deformation is an essential part of all breaking other, perhaps, than that in high-speed impact machines, it is a part of the necessary work that must be done to crush. Furthermore, from the necessary mechanics of the situation, it varies as the volume of the particle broken. That part of it which does not go into producing a break is largely transformed into heat on elastic restitution of the particle. The relatively great magnitude of the heat effect in grinding as compared with that in coarse and intermediate crushing indicates a much larger amount of deformation and restitution in the former operation. Hence, in so far as the straight-line correlation of estimated energy inputs with approximated surface production is interpreted to mean that the work done in crushing is measured by the new surface produced, it is, in the author's opinion, unsound. It is fortunate that operators are not dependent, for commercial measures of the effectiveness of their grinding operations, on actual mechanical efficiencies.

Comparison of comminuting performances. Despite the inadequacy of estimated surface as a measure of useful liberation, exposure, or energy expended, it has some possible value as a comparative measure of the comminution effected, for the reason that it supplies an understandable common denominator for integrating screen grades, and, by use of Gaudin's distribution law as applied by Bond and Maxson (Sec. 19, Art. 19), it permits estimation of the surface in subsieve sizes without the necessity of performing the actual gradings. By relating it to energy input for different operations, the estimated amounts of new surface per unit of gross energy input may be calculated. This has an apparent comparative value if it be borne in mind at all times that at least three independent variables—grindability of the material, reduction range, and machine performance—are lumped together in the answer. By keeping two of these constant in any given case, an actual, although probably not an accurate, comparison is possible.

Bond and Maxson (*134 A 315*) indicate that reduction range does not have a great effect when considering one machine, in that they found that the estimated new surface produced per revolution of a laboratory batch mill (*i.e.*, per unit of gross energy input) remained substantially constant through a considerable range in circulating load and *mog*.

Performances are measured in the great majority of mills in terms of tons per hp-hr. to a particular *mog* or tons <200-m. produced per hp-hr. Such measures for a large number of plants are given in the performance tables in Arts. 7 to 11, *q.v.* The range in flotation mills, the majority of which are grinding to substantially 48 *mog*, is roughly from 0.04 to 0.08 tons <200-m. produced per hp-hr. with the average close to 0.055 tons per hp-hr. In all-slime cyanide mills grinding to 100 or 200 *mog*, and therefore faced in most cases with grinding of hard gangue grains, efficiencies thus measured tend to be less than half of those in the flotation plants.

18. ATTENDANCE AND CONTROL

The operator of a grinding mill can control, ordinarily, the new-feed rate, the tumbling charge, the density of the mill discharge, and the density of the classifier overflow. The usual variables that are outside his control are the characteristics of the mill feed as regards size, grindability, mineral content, and mineral distribution. Hence, his job is to so vary his controls as to produce optimum results from the standpoints: first, of metallurgy; second, of tonnage; third, of grinding efficiency. What part of the decision as to results is left in his hands depends in part on the size of the plant and in part on the man-

agement. In a small plant the mill operator may be also the concentrator man, in which case he will normally use his own judgment as to the changes to be made in ground product to satisfy prescribed metallurgical limits. In a large mill, on the contrary, the nature of the ground product will be prescribed within relatively close limits, usually both as to size and pulp density, and the operator's freedom will be practically limited to changes in new-feed rate and density of mill discharge.

The effects of the various changes in operating conditions available are discussed elsewhere.

Number of mills per operator depends primarily on the size of plant and the number, type, and effectiveness of the control devices installed. With an easily controlled mechanical feeder on the mill bin; clean water under a constant head, and reasonably accurate valves on the supply line; accurate and easily read ammeters on the motors and a constant voltage; and new-feed supply that is reasonably uniform in mineral content, limiting size, and size distribution; an experienced operator can handle 10 to 20 primary mills or perhaps double the number of secondary mills, except that, when one man is attending to a large number of mills, the charging of make-up tumbling media must be handled by a roustabout or by special mechanical charging devices provided. In general, with less than 10 mills in a plant, all of them are attended by one man, and with three mills or less, the mill attendance is a minor part of the operator's duties.

Control Devices

Feeders. There should be a separate feeder at the mill bin for each mill. It should be one capable of relatively constant delivery within close limits, and readily adjustable as to rate, preferably by remote control unless the bin is close to the mill (see Sec. 18, Art. 22). It is well to provide prominent telltales both as to depth of charge in the bin and absence of rock on the feed conveyor. Such gadgets are usually the product of local ingenuity.

Weighing of section feed is usually done by automatic scales (Sec. 18, Art. 23; Sec. 19, Art. 4) on the conveyor from the feeder to the mill. Constant-weight feeders are available, as are also electrical controls from weigher to feeder. In general, however, it is better to control feed rate from the mill itself, either automatically (see below) or through the intervention of the operator.

Mill control is normally through a chain of events started by the operator in response to some change in circuit operation. The indicators of change in the circuit are sound of the mill, power draft, and tonnage of circulating load; occasionally temperature of mill discharge.

Sound. A skillful operator can judge the interstitial loading in a mill by the sound made by the tumbling charge and, if the density of the effluent is correct, can bring the sound back to normal by suitable variation of feed rate. Diminution of sound indicates decrease in nearness of approach of tumbling media to each other, caused either by a coarser feed or greater throughput. In open-circuit grinding either condition invariably correlates with coarser discharge. The converse likewise holds. In closed-circuit work, however, it is, of course, possible to vary throughput and consequent noise considerably without change in fineness of product by change in circulating-load ratio. But once a given throughput and a given composite feed size have been set as constituting normal operation, departure therefrom produces a difference in sound and size of product.

Electric ear (Manufacturer: Hardinge Co.) is a radio-electric device adapted to translate differences in mill sound automatically into changes in feed rate (*134 A 371*). It comprises a microphone, which is set up near the mill shell; a box containing suitable relays to actuate a switch on the feeder motor; and a panel board carrying a microammeter, which indicates relative sound level at the microphone, a calibrated dial for regulation of the relays to response at a desired sound level, and pilot lights indicating power in the lines to the feeder motor and the ear circuit. For details of the electrical circuit see *U. S. Patent 2 235 928.*

In normal operation, with a new feed of relatively constant composition and size distribution, the feeder motor is "on" for 10- to 60-sec. intervals and the "off" periods are 2 to 20 sec. A recording ammeter may be placed on the feeder-motor line to indicate feeder activity. By using an electrically actuated valve on the line supplying mill-feed water, and connecting it in parallel with the feeder motor, pulp density of new feed is also under automatic control. Placing a surge tank between the valve and the mill with a manual valve between the surge tank and the mill to maintain an average head in the tank will smooth out the water supply while maintaining the desired pulp density.

Table 58 presents grinding performance at INTERNATIONAL NICKEL with electric-ear control on a 6 1/2×12 1/2-ft. (I.D.) open-end ball mill running at 23.1 r.p.m. in closed circuit with a 12-ft. Dorr FX classifier. New feed was <3/16-in. The performance without automatic control for the month preceding the tabulated operations averaged 47.7 tons new feed per hr. to 15% >65-m., corresponding

to 0.145 ton new feed per hp-hr. It will be noted that the operator-controlled run corresponds most closely to automatic runs 4 and 5 except that these, with a somewhat higher feed rate, made a finer product. As compared with runs 2, 3, and 8, at what appear to be the optimum dial setting, the automatic runs average 13% increase in tonnage of new feed to the same *mog* and about 10% more tons new feed per hp-hr. SLADEN-MALARTIC reports (*32¹ CIMM 170*) a similar increase in capacity to the same *mog*. At this plant the mill motor was the bottleneck; automatic control made possible operation at the maximum safe power draft.

Table 58. Ball-mill operation at International Nickel with electric-ear control

Test No.	1	2	3	4	5	6	7	8
Duration of test, days	10	5	7	4	5	6	6	11
Sound-level setting	76	80	80	70	70	83	60	78
New feed, t.p.h.	52.8	55.2	52.3	49.7	48.7	49.1	46.0	54.3
Sulphur in feed, %	14.4	15.8	14.2	14.9	14.2	15.1	14.4	14.9
Circulating-load ratio	2.7	3.6	4.5	3.0	3.2	3.6	2.8	3.4
Power consumed, hp.	334	334	333	339	335	330	335	342
New feed: % >65-m.	68.8	70.8	72.7	69.9	68.3	70.9	69.9	69.2
% <200-m.	17.7	16.6	15.3	16.0	17.1	17.5	17.2	17.4
Mill discharge: % solids	83	83	83	83	82	82	82	84
% >65-m.	52.3	59.0	59.1	56.0	52.7	55.4	50.0	53.7
% <200-m.	21.1	17.9	15.1	17.0	19.0	18.0	21.2	19.3
Classifier overflow:								
% >65-m.	14.6	14.6	14.7	13.0	13.5	13.2	11.7	15.0
% <200-m.	49.2	51.6	49.2	50.8	49.6	51.4	51.2	50.2
PERFORMANCE								
Tons per hp-hr.: New feed	0.158	0.165	0.157	0.146	0.145	0.149	0.137	0.159
<65-m. produced	0.085	0.093	0.091	0.083	0.080	0.086	0.080	0.086
<200-m. produced	0.050	0.058	0.055	0.051	0.047	0.050	0.047	0.052

Power draft of a grinding-mill motor is relatively responsive to changes in conditions in the mill. The Hollinger staff (*HS*) characterize the indication as very accurate. The Lake Shore staff (*LSS*) reported similarly. Hitzrot (*134 A 340*) states that this sensitivity is characteristic of low-level operation. If, therefore, a good ammeter is on the line, it can be used as an indicator to the operator of the necessity for a change in operation. The internal conditions thus indicated are, of course, the total weight of material in the mill, the distance of its center of gravity from the axis of rotation, and the extent of upward displacement of the center of gravity caused by the mill rotation. Increase in interstitial loading, due to greater throughput, in the usual operating range, lowers the power draft because the inward movement of the center of gravity is greater, proportionately, than the increased weight. A continuing decrease indicates a continuing build-up in throughput and eventually results in complete overload and cessation of grinding. Drop in the reading with a constant throughput indicates either a decrease in tumbling charge or an increase in pulp density. There is a gradual change in draft with liner wear. The initial change may be a fall as the liner smooths down. Thereafter there is a slow increase, if replacement of tumbling media is held constant irrespective of change in mill volume, due to increase in lever arm of the load; and a more rapid increase, if load is held to a constant percentage of mill volume.

At HOLLINGER (*ibid.*) ammeter control takes care of variations in fineness of new feed; with finer feed more is ground out per pass, less returns, the ammeter reading rises, and the operator increases the new-feed rate to bring the reading down to normal. A continued variation of 1 to 2% in the mean of the ammeter swings is significant. The classifier follows the mill without control other than that necessary to maintain constant density of overflow.

Temperature of mill discharge, as judged by feel, was used as a control for a considerable time at NEVADA CONSOLIDATED (*46 IMM 589*). Apart from the unreliability of the nerves of feel as indicators of temperature—which could, of course, have been obviated—a fall in temperature indicated either an increase in total throughput or a relative increase in liquid throughput (decrease in pulp density), the remedies for which are different.

Tonnage of circulating load is measured either by eye or by some more positive method, *e.g.*, weighing tanks and diversion splitters, as at HOLLINGER (*HS*), or by indicating or recording ammeters on the classifier motor, as at CUBAN AMERICAN MANGANESE (*153 A 98*). With a feed of constant grindability characteristics the method is reasonably sensitive, if the tonnage determination is accurate. But comparison of tests 2 and 3, Table 58, indicates that with variation in grindability (% S) an increase of 19% in tonnage of circulating load was necessary to maintain grind at the same time that tonnage of new feed was dropped 5.3%.

Other grinding-circuit controls. At HOLLINGER (*HS*), in addition to the ammeter on the mill motor and the arrangement for tonnage-sampling classifier sand, there is a recording scale on the feed belt, remote control on the feeders at the bin from the ball-mill floor, a pressure gage on the solution feed line, and a gravity scale for determining density of classifier overflow. At CUBAN-AMERICAN MANGANESE (*loc. cit.*) automatic density controllers on the classifiers, recording meters on the classifier-motor circuit calibrated to read tons of circulating load, and rheostats governing the speed of the motors driving the apron feeders at the ore bins, all located in the control room, comprise the operating control of the grinding circuit; change in the setting of the density controller changes product size; change in the feeder speed, as indicated necessary by the circulating-load record, permits maintenance of constant size of classifier overflow by compensation for variations in hardness of ore, size variation due to bin segregation, etc. A common gadget used to warn an operator of failure of feed comprises a drag which rides the load on the feed belt, the drop of which, with no load, closes a switch which sounds a horn or bell, and/or lights a warning light, and may record the time of interruption (*138 ✻ 11 J 42*).

Instrument *vs.* sense control. An operator will almost invariably play safe in his settings when they are made by sense control. If, therefore, maximum tonnage is the aim, instrument control should always be provided. Concomitant gain in power and steel consumption and, possibly, operator efficiency, will more than pay the installation cost.

19. MAINTENANCE

The principal items of maintenance are the tumbling load, liners, grates, and feeders.

Rods. Charging of rods requires stoppage of the mill. It is, therefore, done at intervals spaced as far apart as is possible consistent with maintained capacity. The usual interval varies, according to the tonnage per mill, from 2 days to a week. The shutdown period varies according to procedure. With adequate crane service, a large discharge opening, plenty of room in front of the mill, and no necessity to remove worn rods, charging can be done in 10 or 20 min. by wiring the rods into bundles of 4 to 8 and clipping the binding wires after introduction, or by use of special slings or carriages (see *131 J 360*). At the other end of the scale, with no crane, and when worn and bent rods are removed at the same time, the shutdown period may be several hours. Under such circumstances the advisability of using rods of sufficiently high carbon content to cause them to break up rather than bend as they grow thin becomes apparent.

Balls are charged at short intervals as a part of regular operating routine. In smaller plants such charging is done each shift by the operator; in larger plants it is usually done on day shift by a roustabout. In OVERFLOW MILLS charging is ordinarily through the discharge trunnion; with GRATE MILLS it must be through the feeder unless an overload hole in the center of the grate will serve. Large balls are handled individually in manual charging; small balls may be shoveled in. With crane service, special boats are used for discharge-end charging.

Pebbles are handled in the same way as balls when they are special durable flints, but when mine rock is used the tonnage is too large for this procedure. SOUTH AFRICAN practice is best developed. It comprises a special hopper for the pebble rock and gravity feed therefrom through a chute or pipe into a horizontal pipe entering the trunnion. Fig. 13 shows one form of arrangement.

Storage of tumbling media. Since consumption is from a considerable fraction of a ton per week up to several tons per day, according to size of plant, some provision should be made to expedite handling into and through the store yard. When crane service is available on the grinding floor, the usual procedure is to unload to piles or crude pens within the range of the floor crane or of a portable auxiliary. When cars are used for transporting balls from yard storage to the mill, attempt is made to place the ball pens in such a position that they can be loaded by gravity from railroad cars and unloaded by gravity into the floor cars, but since the tonnage is not great and the bulk is relatively even smaller, not much expense is justified in contriving such convenience.

Liners and grates. Relining is the principal cause of lost time in tumbling-mill operation. At the unusual best it requires a shift with the services of 6 or 8 men. More usually the time is 2 or 3 shifts without any reduction in the number of men per shift. Rail liners grouted in (*e.g.*, Britannia type, Art. 5) require 3 days because of the necessity to permit the cement to harden, but 3 men per shift can do the job. At plants where a considerable number of mills of the same size is used and heavy-duty cranes are available, it is customary to have an extra mill and two extra stands at the end of the grinding floor. When a liner is to be changed the pinion shaft is dropped away, the trunnion-bearing caps removed, and the mill is lifted, its load is dumped into the spare, and the latter is then put into the working line. Then relining can be done as a regular rather than as a rush job. Shutdown time

with such procedure may be less than 1 hr. Mills are then put as nearly as possible on a regular schedule of relining. If this is coupled with use of white-iron liners cast in company or local shops with remelting of scrap, considerable saving may be effected. Otherwise mills must be shut down for inspection at relatively short intervals as the time for relining, based on past performances, draws near.

Feeders. Usual procedure is to use replaceable manganese-steel tips on plate or cast-iron feeders, or to hard-surface the tips as needed, and to patch the body by welding so long as such patching is justified.

Lubrication. The points to be lubricated are the mill gear, pinion-shaft bearings, mill main bearings and, with direct connection, the reducing-gear unit. A different lubricant is required for each service. The initial selection should be made on the advice of the manufacturer of the machine, and behavior should be watched carefully until performance is established. Thereafter experimentation in consultation with the lubrication engineer of one of the larger oil companies may well be instituted. Consumption is not great, but protection and possible power reduction are important. When the best lubricants have been found, their properties should be tested, and subsequent purchases should be made on specification rather than on brand.

20. COST OF WET GRINDING IN TUMBLING MILLS

The cost of grinding depends upon the size of feed, size of product, grindability of the ore, the size of the installation, and the efficiency of the operation. The principal items of operating cost are power, steel, and labor. Average cost of power in mining districts is close to 1¢ per kw-hr. Power required may be estimated from the performance tables, Arts. 7 to 11. On average ore power is from 40 to 60% of total operating cost, labor from 5 to 10%, and steel the balance. On hard ores steel may comprise 50 to 60% of total cost. Prices of cast or forged-steel balls range from 3 to 5¢ per lb.; cast liner, 2 1/2 to 4¢; manganese liner, 10 to 15¢. Average total cost (1930's) for grinding to flotation size (including classification) was from 15 to 20¢ per ton, with a low of about 8¢ per ton at the large porphyry-copper plants and highs of 25 to 35¢ at some of the lead-zinc differential plants. These figures are irrespective of the number of stages, but the low figures ordinarily relate to 8- or 10-m. feed and should be debited with 4 to 8¢ per ton for fine crushing or rod milling from 1-in. to this size. For grinding to 100- or 200-m. costs are double to nearly four times those to rougher-flotation size. White (*32 JCM 98*) states that on the Rand the grinding cost varies as the square of the percentage of <200-m. in the product.

21. MISCELLANEOUS WET-GRINDING MACHINES

Grinding ores for wet concentration and for hydrometallurgical extraction is done exclusively in tumbling mills except in an occasional small plant built largely from junk piles. There are, however, industrial grinding problems either actually better solved by the discarded ore grinders, or so thought to be. Inclusion herein of brief descriptions of these machines and their performances is justified on this basis.

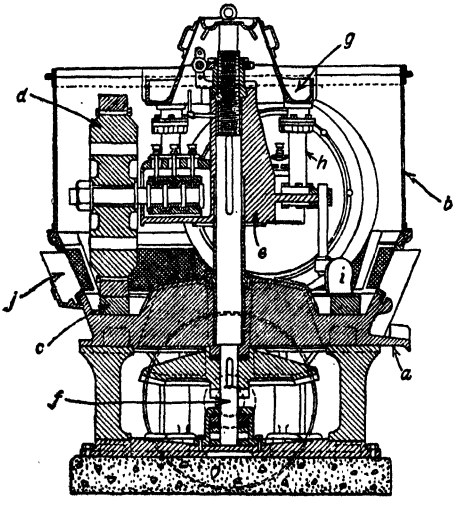

FIG. 78. High-speed Chilean mill.

Chilean Mill

A typical high-speed mill is shown in Fig. 78. The essential parts are a circular cast-iron pan *a* with screen and sheet-iron wall *b*, a die ring *c* and three steel-shod circular rollers *d*. The method of mounting and driving the rollers differs in different makes. In the figure, the rollers are rigidly mounted on axles carrying thrust bearings trunnion-mounted in an adjustable yoke *e* driven by feathers from spindle *f*. The vertical position of the yoke on the spindle is changed by means of nuts on the threaded upper portion. This per-

mits lowering the axles as the tires and die wear and also, by inclining the axles downward toward the spindle, utilizes, in crushing, a certain proportion of the centrifugal force developed. The feed stream, introduced into the annular box *g* is led by pipes *h* to a point just ahead of the advancing rollers. Scrapers *i*, following the rollers, churn up the material on the dies and help to keep the fines in suspension. Travel of the rollers causes a circular swash of pulp against the screen through which ground material discharges into the annular launder *j* and is led away. Each roller is free to lift independently when an uncrushable lump is encountered. In another form the thrust bearings are rigid in the yoke and the latter is carried on a spherical bearing on the spindle. The whole table tilts when one roller passes over a large particle. Both types of mill are made, infrequently, with overdrive and also with fixed axles and the journals in the roller hubs. Overdrive is clumsy and less rigid than underdrive. Hub journals are difficult to lubricate and protect against grit.

Sizes range from 2- to 8-ft. diameter, weighing 6,000 to 125,000 lb. respectively. The commoner sizes are the 5- and 6-ft., weighing respectively about 30,000 and 50,000 lb.

Low-speed mill. The modern form of low-speed mill has two to four rollers running on a die ring 6- to 10-ft. diameter. The rollers are made very heavy, or, in one form (LANE MILL) are on axles whose bearings are attached rigidly to the yoke while the latter carries a large tank that may be loaded with several tons of ore or pig iron in order to add to the crushing load. The SIZE OF PRODUCT is determined by the height of the overflow lip and moisture content, no screen being used.

Performances. HIGH-SPEED MILLS, 5- and 6-ft. diameter, ground relatively soft ores (porphyry copper) wet from about 3-m. to 10-m. at the rate of 150 to 225 t.p.d. with a consumption of 30 to 50 hp. Screen life was 1 to 10 days, the shorter lives corresponding to light-weight screens set low for high capacity. Shutdowns were frequent and maintenance costs high. The mills were displaced by rod mills.

LOW-SPEED MILLS, 6- or 7-ft. diameter, crushed medium to soft ores from 1- or 1 1/2-in. limiting to 35 to 65 *mog* at rates of 0.75 to 1 t.p.h. with a consumption of 10 to 15 hp. Upkeep was low and the machine essentially foolproof. It is adapted to inside amalgamation and is still used—and wisely—in some small gold mills.

For detail of operations on ores see *Ed. 1.*

Cost ranged from 10¢ per ton for reducing a soft ore from 1/4-in. to 10-m. to 25 or 30¢ for grinding medium ore from 1/2-in. to 20 or 28 *mog*, and ran up to 35 to 50¢ per ton for grinding medium to hard ores to 48 to 65 *mog*.

Arrastre

The arrastre is the primitive forerunner of the Chilean mill; it was much used in early Mexican gold milling for grinding from <1-in. size to slime. Practice in building varied, but the usual form was a circular pit, walled with rock or logs and chinked with clay, the bottom lined with flat stones similarly chinked, over which flat-bottomed cubical stones weighing 100 to 1,000 lb. were dragged by means of a horse-drawn sweep. Ground pulp overflowed through pipes at about 6 in. above the floor. Amalgamation was commonly practiced in the machine. CAPACITY varied from 200 or 300 lb. per day of soft ore in machines 3 or 4 ft. in diameter to 2 to 5 tons in 8- to 12-ft. mills.

Storms (*91 J 1053*) gives the following details of construction of the double arrastre shown in Fig. 79. Floor *a* was a double layer of 2-in. plank. Walls *b* were built of circular segments of 2-in. plank nailed together. The bottom of the basin was filled with a layer of firmly rammed clay, then 6 to 8 in. of sand in which the floor blocks of hard, tough stone were laid. The edges of the blocks were left rough so that the spaces between them would afford settling places for amalgam. The floor sloped about 1 in 8 toward the sluice gate, which was 6 in. wide, extended 4 in. below the top of the rock floor and was closed by a sliding door. The discharge height was varied by 1-in. strips laid in cleats. Drags weighed 800 to 1,000 lb. Massive diabase, diorite, or granite served well for both floors and drags. The drags were fastened to chains by 5/8-in. eyebolts wedged into holes 5 in. deep, and were set to sweep pulp into the path of the following stone. The front end of the drag stone should be lifted about 1 in. in order to nip large particles. The water wheel was of the hurdy-gurdy type; pipe line 7-in. diameter with 2-in. nozzle; water available, 18 cu. ft. per min. under 100-ft. head. Pinions were 3-ft. diameter with 13 hardwood pins 2-in. diameter, 4 in. high and 4 in. center-to-center. The horizontal pin wheels of 2-in. plank spiked and bound with strap iron were 6-ft. diameter with 51 pins similarly shaped and spaced. The main shaft revolved on 3-in. iron gudgeons. The bearing for the center post was made of 4-in. square steel 7 to 8 in. long with a spherical depression 3-in. diameter by 1 1/2 in. deep, smoothly finished, tempered at bronze color and set in the upper end of the lower post, which was

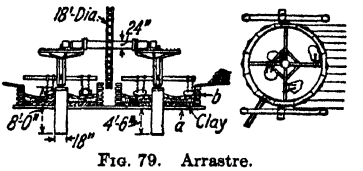

FIG. 79. Arrastre.

bound with an iron collar to prevent splitting. The gudgeon in the foot of the revolving post was forged to fit.

Operation. When amalgamating in this machine, batch operation was practiced. Ore was charged a little at a time with enough water to make a thin mud (40 to 60%) and ground for 5 to 7 hr., or until fine enough to add mercury, after which addition grinding was continued 2 or 3 hr. or until panning showed all free gold amalgamated. The speed of drags during amalgamation should not exceed 360 f.p.m.; higher speed could be used during crushing, but repairs were less when the desired capacity was attained with heavy drags and low speed. During the latter part of the amalgamation period the drags were slowed down to 150 f.p.m. and pulp diluted to allow coarse grains to settle and be ground and amalgam to settle in cracks. When panning showed the pulp free of amalgam, the basin was raked and sluiced out gently and the floor cleaned up in the usual manner (see Sec. 11, Art. 26).

Huntington Mill

Huntington mill (Fig. 80) consists of a cylindrical cast-iron tub *a*, 3 1/2- to 6-ft. diameter, with screened openings *b* in the walls to permit controlled egress of ground pulp; a die ring *c* wedged in place against the wall near the bottom; and four rollers *d* suspended like governor arms from the yoke *e* which is keyed onto the upper end of the driving

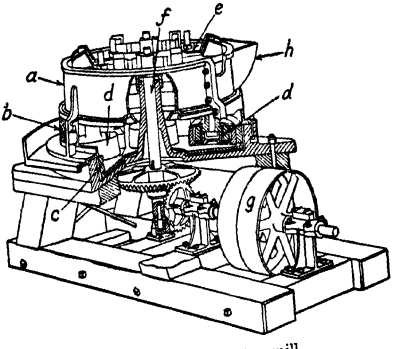

FIG. 80. Huntington mill.

spindle *f*. As *f* is revolved through bevel gearing from driving pulley *g*, the rollers (MULLERS) are pressed against the die ring by centrifugal force and roll around, crushing material between them and the dies. Feed is introduced with water at hopper *h*, the swirl set up by the revolving mullers throws it against the dies to be crushed and against the screens for discharge. The principal wearing parts are the roller tires, ring dies, and screens. Tires and dies are usually made of chrome steel. Screens are woven wire or punched plate. Sizes range from 3 1/2- to 6-ft. diameter of die ring; corresponding weights are from 7,000 to 50,000 lb.

Operation. SPEEDS are about 1,000 f.p.m. peripheral, usual practice was 75 to 85% moisture, which supplies sufficient water to wash material through the screens readily. FEED should be fine (0.25-in. or under) unless the ore is very soft. CAPACITY to 20-m. ranges from about 8 tons per 24 hr. for a 3 1/2-ft. mill with coarse (<0.75-in.) feed to as high as 185 tons in a heavy 6-ft. machine regrinding soft middling from 10- to 20-m. The product is granular and well suited to table concentration. COST at TONOPAH MINING CO. (*91 J 1213*) grinding through 28-m. rectangular mesh was $0.52 per ton, of which $0.21 was for repairs. Machine sectionalizes well.

Grinding Pan

The grinding pan (Fig. 81) consists essentially of a cast-iron tub, usually about 5 ft. diameter and 2 1/2 to 3 ft. deep, carrying a broad annular die ring on the bottom, on which heavy shoes are dragged by means of a yoke; this in turn is driven by a spindle from bevel gears and a belt-driven countershaft below the pan bottom. Shoes and dies are ordinarily of gray cast iron which wears down with a rough scored surface. White iron and alloy steels are unsuitable because the wearing faces become smooth and polished, with accompanying reduction in capacity. An adjusting screw with locking wheel is provided for adjustment of the height of shoes. Mullers, which carry the shoes, should be attached to the yoke arms by a flexible fitting in the nature of a universal joint; if a rigid joint like that in an amalgamating or clean-up pan is used, the shoes will often chatter,

capacity be reduced, and breakage increased. Die ring and shoe circle are sometimes continuous, but ordinary short spaces are left between both the shoes and the die segments. These form channels into which pulp flows and from which the crushing faces are fed. New shoes weigh 75 to 200 lb. and the crushing force is limited to that exerted by this weight when dragged over the die. Compensating weights are sometimes used to keep the crushing force up to normal as the shoes wear.

Pans are of two general types, *viz.*, ordinary and positive. In the ordinary pan the feed is introduced at any point, although preferably this is near the center, and discharge is by

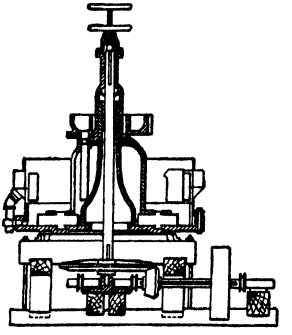

FIG. 81. Grinding pan.

peripheral overflow or its equivalent. Fineness of product is controlled by height of discharge. Baffles are placed on the inner wall of the pan to return pulp to the center. Capacity is low and power consumption relatively high on account of the large body of pulp that is kept in motion. The POSITIVE PAN is fed through a central cylinder discharging near the bottom of the pan at the inner edge of the die ring. Pulp flows outward through the shoe and die channels and is then forced upward along the walls of the pan by centrifugal force induced by the swirling action. Discharge is low. Size of product is controlled by outside classification (or screening) or by a screen (COBBE-MIDDLETON), or a classifier (FORWOOD-DOWN) attached to the pan walls. Usual size range is 5- to 8-ft. diameter.

Operation. SPEED ranges from 25 r.p.m. for 8-ft. pans to 50 or 60 for 5 ft. CAPACITY of the 5-ft. pan was from 1/2 to 1 t.p.h. from <10-m. to 48 or 65 *mog* according to character of ore. POWER CONSUMPTION for the 5-ft. pan was 8 to 10 hp. METAL CONSUMPTION (cast iron) was 1 to 3 lb. per ton. COST of grinding from 10-m. to 48 *mog* was 30 to 50¢ per ton.

Use. The pan has some present use in amalgamating concentrates, although most such work is now done in batch-type tumbling mills.

SECTION 6

DRY GRINDING

BY

HARLOWE HARDINGE, PRESIDENT, HARDINGE CO., INC.

ART.	PAGE	ART.	PAGE
1. Introduction	01	3. Tumbling mills	11
2. Fixed-path mills	03	4. Operation	45

1. INTRODUCTION

The primary factors that determine whether a material is to be ground wet or dry are: (*a*) Physical characteristics and subsequent use; (*b*) effect of material on the mill, *i.e.*, rate of wear, corrosive effect, tendency to pack or stick in the grinding zone; (*c*) shape, size range, particle distribution, and quality of the product desired; (*d*) relative economic efficiency of the operation, taking into consideration capital cost, power, labor, maintenance, repairs, and production; (*e*) climatic conditions; (*f*) availability of water supply; (*g*) nuisance and safety factors such as noise, dust, excessive vibration, and speed.

Those ores and industrial minerals which are best beneficiated wet are usually ground wet. Wet grinding has long been considered more efficient than dry, but recent developments in the arts of dry grinding and dry size separation have narrowed or extinguished any efficiency differential, so that now products heretofore ground wet are being ground dry at a lower over-all cost and/or to a product of such character as to increase the efficiency of subsequent processing or the salability of the product, or both. COAL used as powdered fuel is almost invariably ground dry, increasingly in units comprising grinder, a screen, and/or an air classifier, the coal being blown into the combustion zone by or together with the air used for size separation. The raw mix in a CEMENT plant may be ground wet or dry (Sec. 3A); the determining factor being, usually, the need for correction (Sec. 3A, Art. 2), but in some cases personal prejudice. Most of the new cement plants built in the 1920's used wet grinding for raw mix, but dry grinding with a modern air classifier makes a simpler and more compact installation, and again demands serious consideration (*45 #8 RP 49*). Dry grinding is essential for CEMENT CLINKER, since the cement must, of course, be kept free from water until used. In processing INDUSTRIAL MINERALS, the decision to grind wet or dry depends upon the character of product desired, the effect of metal contamination, and rate of mill wear. Abrasives are ground either wet or dry, according to the size and shape of grain demanded, more particularly, the mill wear. In grinding clays, mineral pigments, colors, and ceramic materials, decision may rest upon one prevailing factor or a combination of the factors mentioned above. METALLICS such as iron castings, aluminum, magnesium, and bronze are usually ground dry to avoid discoloration, oxidation or contamination. Magnesium powder for explosives, flares, etc., is usually ground dry because a more acceptable product is thus produced; magnesium may, however, be ground wet in some medium other than water, the liquid being distilled off later. Reclamation of metal particles from dross and waste in aluminum, magnesium, and brass foundries is accomplished by dry grinding, if practicable, owing to the simplicity of handling; but where jigs and tables are used for recovery, wet grinding is usual. Most SALTS, DRUGS, and the like must be ground dry, some in inert atmospheres to prevent explosion, others in definite chemical atmospheres to obtain the desired reaction, still others at very low or very high controlled temperatures; some are ground and mixed simultaneously; either batch or continuous operation may be employed.

The decision to grind wet or dry is not, therefore, a simple question of efficiency or cost in all cases, but may be based upon factors that are not obvious at first glance, yet are vitally important to successful operation of the system as a whole.

Dry-Grinding Systems

There are three basic systems of dry grinding, *viz.*, (*1*) batch or intermittent, (*2*) open-circuit or single-pass, (*3*) closed-circuit. In BATCH GRINDING a charge of material is placed in the grinding device and remains there until the product is of the desired fineness, when it is removed in finished state. Tumbling mills are frequently run batch on small tonnages.

OPEN-CIRCUIT GRINDING mills have separate feed and discharge ports; feed rate is so regulated that the product is discharged in finished state. The attrition mill, buhr mill, pan mill, and tube mill are usually operated open-circuit. In CLOSED-CIRCUIT GRINDING, part of the material passes through the mill more than once. After discharge it goes to a separating device, where oversize is removed and returned to the mill for further grinding, while finished fines are discharged from the circuit. The separation may be done within the mill itself, as in Krupp or Griffin mills with internal screens, or in roller mills with internal air classification. The external method is exemplified by a ball or pebble mill discharging to an external screen or air classifier which returns oversize; hammer, ball-bearing, and ring-roll mills are also thus operated.

Products obtained in grinding may be classified as: (*a*) graded, (*b*) granular, (*c*) fine, (*d*) abraded, (*e*) cleaned, (*f*) disintegrated or divided, (*g*) rounded, (*h*) sharp, or (*i*) flake. These various characteristics are illustrated in Fig. 1 (*26 IEC 1139*). The ideal product of

Legend for Fig. 1:

A. Open-circuit or batch grinding: (*a*) Particles coarser than specification; (*b*) the quantity of each size is variable; (*c*) an excess of extreme fines is present even though some oversize is permitted to discharge with the product.

B. Closed-circuit mill product prior to separation by air classifier or screen: (*a*) A relatively large amount of oversize is present; (*b*) grain size and quantity decrease uniformly.

C. Oversize removed by classifier (closed-circuit grinding): Oversize (*a*) together with a small quantity of undersize (*b*) is returned to the mill for finishing.

D. Finished product as discharged from air classifier: (*a*) Oversize is substantially eliminated; (*b*) finished product is reasonably uniform.

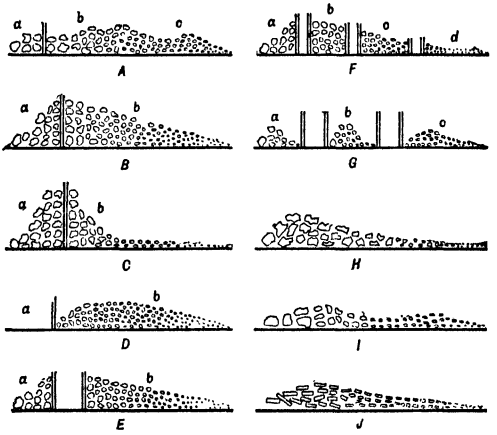

E. Division of product as discharged from a mill over a screen: (*a*) Oversize as returned to the mill for finishing; note the difference between this and oversize of the air classifier, item *C;* a sharp cutoff at point of separation occurs when the separation is by screen. (*b*) Product as discharged through a screen.

F. Multiple products from a mill followed by a multideck screen: (*a*) Oversize returned to mill for finishing; (*b*) first sized product, coarsely granular; (*c*) second sized product; smaller granules, but negligible fines; (*d*) some granules and all the fines. Note sharp differentiation between sizes as compared with air classifier, item *G.*

G. Products from multiple air-classifier system delivering several products: (*a*) Oversize and some fines returned to mill; (*b*) medium fine product; granular, but carries some fines; (*c*) fine product containing fines and superfines.

H. Granular particles, with sharp and angular grains.

I. Rounded particles produced in quantity in the finer sizes.

J. Flat particles; metals, graphite, mica; flaky in all sizes.

FIG. 1. Size distribution and shape of dry-ground products.

the method may not be procurable in a particular case because of the nature of the material and limitations of the mill used. Thus a multiple-size product (item *F*) might be desired, but be unattainable because the particular material blinded screens, or, as is more often the case, because fineness specifications required such fine grading that, although a screen would pass the material, screen-cloth maintenance would be prohibitive, and an air-classified product, (item *G*) would serve.

Material may be merely abraded, and thus cleaned, rather than ground. Some materials require disintegration to break away unwanted particles, *e.g.*, foundry waste, where it is desired to remove burned sand, ashes, and/or clinker from metal particles, so that the latter may be recovered, yet the operation must be such as to avoid grinding of the metal particles themselves.

Classification of mills

Grinding machines employed for dry pulverizing may be grouped into the following classes: (*a*) Attrition and buhr mills; (*b*) impact mills; (*c*) jet or injector-type mills; (*d*) pan or chaser mills; (*e*) rolls; (*f*) ring-roll and roller mills; (*g*) ball-bearing mills; (*h*) tumbling mills.

These mills may be further grouped into two classes characterized by the fact that in the machines of one group the comminuting elements are relatively few and follow definite paths (FIXED-PATH MILLS), while in the other the elements are multifarious, and not constrained as to individual path (TUMBLING MILLS).

2. FIXED-PATH MILLS

Buhr and attrition mills

Horizontal buhr mill (Fig. 2) is one of the oldest forms of grinding mill. It consists of two flat circular stones *a*, *b*, only one of which may rotate, or the two may rotate in opposite directions. In Fig. 2, *a* is fastened to housing *c*, held down by spring-backed bolts *d*; stone *b* is mounted on a rotary table driven by shaft *f* and pulley *g*. Spacing of the stones is effected by hand wheel *h* and lever *i*, which raises ball-bearing step *j*. Feed, introduced through hopper *k*, drops into the central hole, works its way to the outside while being ground between the stones, and discharges at *l*. Stones are made of rock emery or a combination of French buhr, pebble grit, and emery rock. Grooves are cut in the stones to force material toward the periphery; size and position of the grooves vary with the material being ground. SPEED of a 42-in. mill is about 300 r.p.m.; MOTOR HP., 18; CAPACITY, 1 to 3 t.p.h. according to material and fineness of product.

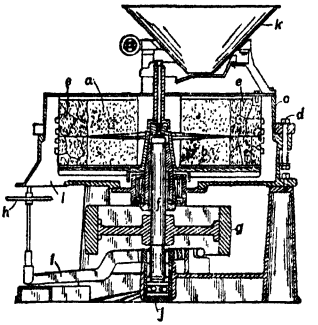

FIG. 2. Horizontal buhr mill.

Vertical buhr mill (Fig. 3) comprises a fixed stone *a*, and a rotating stone *b* carried on pulley-driven shaft *c*. Feed enters housing *d* via hopper *e*, and is introduced through the central hole in *a* by feed screw *f*. Ground material discharges at *g*. SIZE (diam. of stones) ranges from 24- to 42-in.; SPEED is 4,500 to 5,000 f.p.m. peripheral; CAPACITY ranges from 1/2 to 15 t.p.h. according to size of mill, speed, material, and fineness of product; power consumption is 12 to 80 hp.

Use. Buhr mills are used primarily for grinding soft materials such as clay, chalk, talc, salt, coal, ocher, lime, and gypsum. Feed size should not exceed 1/4-in.; product ranges from 20-m. to 200-m., depending upon method of operation, grooving, speed, pressure, etc. It is recommended that for products finer than 80- or 100-m. screens or air classifiers be used to close circuit on the mills.

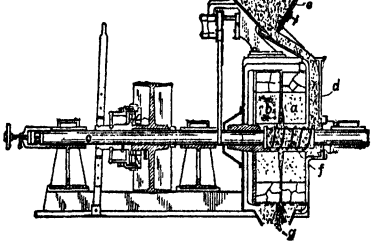

FIG. 3. Vertical buhr mill.

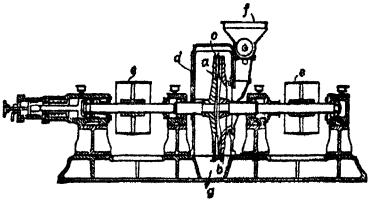

FIG. 4. Attrition mill.

Buhr mills have been largely superseded, as it is costly to dress the stones and difficult to obtain skilled dressers. Hard substances in the feed damage the stones despite provisions to permit them to spread in case foreign material enters. Efficiency is low; they become hot when grinding is fine; but it is claimed that with some materials a grade of product is secured that is not produced by other types of machines.

Vertical attrition mill (Fig. 4) comprises plates *a* and *b*, shod with grooved wearing rings *c*, all enclosed in housing *d*, and rotated in opposite directions by pulleys *e*. Feed is introduced centrally through hopper *f*; peripheral discharge emerges through outlet *g*. Grinding faces are made in different patterns to obtain products of different characters. SIZES (diam. of plates) range from 16- to 36-in.; SPEEDS range from 7,500 to 12,500 f.p.m. peripheral; power consumption: 5 to 35 hp.; CAPACITIES are low.

This mill is used principally for cracking and shredding plant products; it should, however, be useful for the softer industrial minerals when similar comminuting action is desired.

Impact mills

Hammer mill. For description and use as an intermediate crusher see Sec. 4, Art. 9 Some types are capable of grinding service when run in closed circuit with fine screens and/or air classifiers. CAPACITIES with 1/8-in. bar spacings on different materials as given by one manufacturer are shown in Table 1.

Table 1. Capacity of open-circuit hammer mill in grinding service (*after Jeffrey Mfg. Co.*)

Size, diam. of hammer circle by length, in.	Approx. hp. consumed	Tons per hour			
		Lime-stone	Coal	Burnt lime	Gypsum
20×12	12 to 20	2 to 2 1/2	2 to 3	3 to 4	3 to 3 1/2
24×20	30 to 40	4 to 5	6 to 8	7 to 8	6 to 7
36×24	60 to 75	10 to 12	14 to 16	15 to 20	15 to 18
42×36	100 to 125	20 to 25	30 to 40	35 to 40	30 to 35
42×66	175 to 250	50 to 60	75 to 85	70 to 80	65 to 75

Performances in grinding service are shown in Table 18, items 69, 84, 149, 178, 179, 209.

FINENESS of product is determined not only by the bar spacing, but by the SPEED. A 24-in. pulverizer at 1,000 r.p.m., grinding limestone, with 1/8-in. bar spacing, made a product 99% <6-m., 28% <100-m.; at 1,600 r.p.m., the product was 100% <6-m. with 43% <100-m. See also Table 18, item 149.

Raymond Imp mill (Fig. 5) is of the hammer type, adapted to fine grinding in closed circuit with a screen or air classifier. Feed enters the hammer chamber *c* through hopper *a* and star feeder *b*; ground product is swept out by an air current induced by centrifugal fan *d*, taking suction through pipe *e*, and leaves by pipe *f*. Blades *g*, adjustable, and mounted on shaft *h*, throw coarse oversize back into

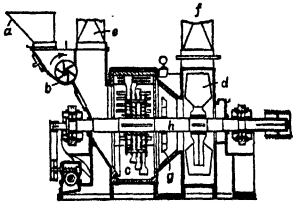

FIG. 5. Raymond Imp mill.

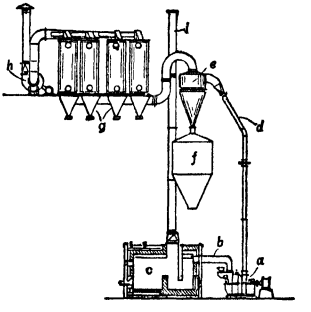

FIG. 6. Impact pulverizer in drying-grinding circuit.

chamber *c*, which has the result of saving fan *d*, and decreasing transport load on the air. Fig. 6 shows an arrangement of the mill in a circuit in which the solid is subjected to hot gas during grinding. In this set-up the mill fan *a* takes suction through flue *b* on furnace *c* and delivers through flue *d* to cyclone collector *e*, from which finished product drops to bin *f*, while dust passes on into dust collectors *g* exhausted by fan *h*. Stack *i* is used in starting. Such an arrangement is commonly used for calcining gypsum or copper sulphate, etc., as well as for drying. As a unit grinder for powdering very soft coal in lime or cement plants, *d* is run to the burner, and *b* takes suction on the cooler (Sec. 3, Art. 24; Sec. 3A, Art. 4).

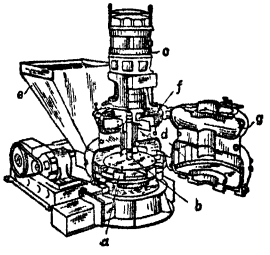

FIG. 7. Whiting horizontal-hammer mill.

This machine is suitable only for very soft materials. SIZES and CAPACITIES for a given service will best be determined by study of existing installations in similar service.

Horizontal-hammer mill (Fig. 7), used primarily as a unit coal pulverizer, comprises hammers *a*, mounted on extended shaft *b* of vertical motor *c*, and corrugated cage ring *d* lining the chamber enclosing the hammer. Feed is introduced through hopper *e* into the side of the hammer chamber via a screw feeder. Fan *f* in chamber *g* takes suction through ports below the hammer chamber, and discharges

through a peripheral opening in the fan chamber. Fineness of product, dependent upon draft, is controlled by a deflector in the upper part of the hammer chamber. Rated CAPACITIES on bituminous coal (grindability 65 by Hardgrove method) range from 600 to 6,500 lb. per hr. to 70% <200-m.; corresponding MOTOR HP. ranges from 10 to 100.

Cage mill (Fig. 8), shown in open position, comprises two cages *a* and *b* revolving in opposite directions, one inside the other in the position assumed when the faces *c* of the housing are brought together. Feed introduced through screw feeder *d* (when the cover *e* is bolted in place over the cages) enters through the side *f* of the larger cage *b* into cage *a*, and is then thrown around inside *a* and between *a* and *b* until it escapes through bottom-discharge opening *g*. SIZES (diam. of larger cage) range from 12- to 54-in.; SPEEDS are from 4,000 to 6,000 f.p.m. peripheral; rated CAPACITIES are from 2 to 70 t.p.h. according to size of machine and character of feed.

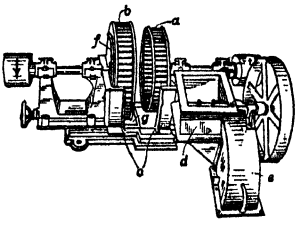

FIG. 8. Cage mill.

Use. The machine is essentially a disintegrator of caked dried fine solids and very soft and/or brittle materials like phosphates, clay, salt cake, alum, pigments, and infusorial earth.

Jet Pulverizer (MICRONIZER), shown in Fig. 9, consists of a stationary squat circular grinding chamber *a*, top-fed through ports *b*, equally spaced, injected from feed manifold *c;* steam or gas at high velocity is introduced through peripheral jets *d* from manifold *e* along lines *i* tangent to circle *f*. Pressure of the entering fluid is transformed into velocity head by expansion to substantially atmospheric pressure within the grinding chamber. The force of these expanding streams, directed somewhat tangentially, causes the contents of the chamber to rotate at high speed, whereupon solid concentrates near the periphery and is acted upon by the entering gas. It is claimed (*45 CME 238*) that most of the energy of the gas is dissipated within an inch or two of the point of entry, causing intense local velocity gradients and violent collisions within the grinding zone. Most of the grinding action takes place within the mass itself, as evidenced by the fact that a rubber-lined grinding chamber has been employed without significant reduction in grinding efficiency. Even so, wear is relatively high. With certain materials, the wear may become excessive. Fine solid, crowded to the centrally located bottom outlet (diameter about one-third that of *a*) is in a rapidly whirling gas stream, and is thrown to the walls of collector *j*. It is claimed (*ibid.*) that efficiency of collection increases with intensity of classification in chamber *a*, so that degree of collection increases with decreasing particle size in the product, and that from 85 to 98% of the product is retained in the collector.

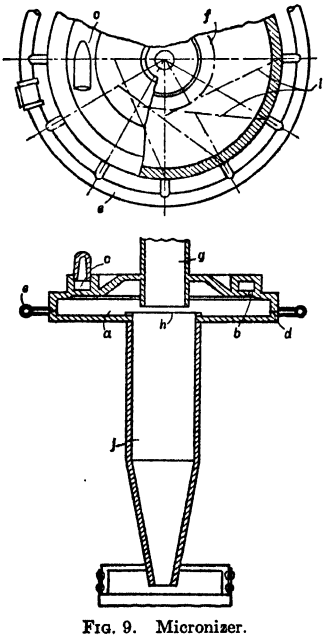

FIG. 9. Micronizer.

Steam is generally used where it can be applied, as it is more efficient, on a cost-per-pound basis, and will, also, make a finer particle size than air, but air is used when steam temperatures are not permissible. Air pressures are of the order of 100 p.s.i.; superheated-steam pressures range from 100 to 500 p.s.i. at temperatures of 500 to 700° F.

Chamber sizes range from 12- to 36-in. diameter by 1- to 2 1/2-in. axial height. Jet orifices range in number from 6 to 16, and in size from 1/8- to 3/8-in. SIZE OF FEED should not exceed 1/8-in. Rated CAPACITIES range from a few ounces to 4,000 lb. per hr.

Use. The economic range of application is limited to products considerably finer than 325-m., since the cost of grinding is excessive compared with methods commonly employed for coarser products. Very fine products in the micron sizes can be obtained, however, and, in a number of cases, products possessing special characteristics have been secured, so that the device is commercially successful but the field is limited.

The manufacturers state that to grind barite from 20-m. to <3μ, 3 lb. steam per lb. of feed is required; for talc through the same range, approximately 6 lb. steam per lb. of feed; grinding Persian Gulf Oxide to 2μ requires 5 lb. steam per lb. of feed; graphite ground to the same fineness requires 15 lb. steam per lb. of feed; most precipitated materials, however, *e.g.*, titanium dioxide, require only about 1 1/2 lb. steam per lb. of feed.

Pan Mill

Dry pan is also known as an EDGE-RUNNER or CHASER MILL, somewhat similar to the Chilean mill (Sec. 5, Art. 21) in basic principle. The form shown in Fig. 10 comprises a pan with sheet-iron wall (partly broken away) and perforated cast-plate bottom *a* which is rotated under rollers *b* by vertical shaft *c*. The roller axes may be supported so that the rollers do not actually touch the bottom plate, in which case it is the bed of material on the plate that causes their rotation and the consequent crushing. The crushing effect is increased by springs or hydraulic pressure exerted against upward movement of the shafts. Deflecting scrapers *d* move material under the runners.

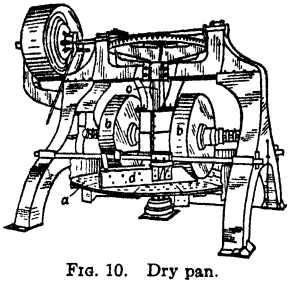

FIG. 10. Dry pan.

In another type, the bottom plates are imperforate and material discharges over the edge of the plate under baffles adjusted to a definite but close clearance. In yet another type the base is stationary and the rollers both revolve and rotate, the scraper also rotating to direct material under the runners.

RUNNERS and PLATES are usually made of wear-resisting steel or chilled iron; the plate is made of hard stone or porcelain, and the mullers of stone, if contamination by metal is not permissible. SIZES (diam. of pan) range from 5- to 10-ft. and mullers correspondingly from 7×36- to 13×54-in., weighing 1,750 to 8,300 lb. each. SPEEDS are 25 to 30 r.p.m. CAPACITIES on clay are from 1 to 15 t.p.h.; MOTORS, 10- to 60-hp. The rim-discharge machine is larger and heavier (16×60-in. @ 12,000-lb. mullers), is run faster (50 r.p.m.), and is rated at 40 to 75 t.p.h., but the product is coarser. Capacities with stone mullers are much lower; the operation is often batch, because no screen or perforated plate is employed, and rim discharge is not practical. The ceramic plate is usually 4 to 6 in. thick, and rolls 14×36- to 18×54-in.

Use is mainly in the clay and ceramic industries for mixing clays, disintegrating and grinding grog, and crushing quartz and other materials where relatively coarse pieces are to be crushed and metal contamination is to be avoided. Whereas the machine has a definite place in the clay-products industry, the ball and pebble mill compete, since maintenance and power consumption are high in the pan, particularly when a hard material must be ground fine.

Rolls

Choke-fed rolls (Sec. 4, Art. 8) may be used as pulverizers, and are so used occasionally, but probably in all cases some other machine would do the job better.

Performances. See Table 18, item 93, and Sec. 4, Art. 8.

Roller mills

These mills consist of a large metal ring against the inside of which one or more metal rollers of relatively small diameter press and roll and break solid particles introduced between the contacting surfaces. The mill takes a variety of forms with the ring either vertical or horizontal and pressure induced by gravity, springs, centrifugal force, or combinations of these.

Vertical ring-roll mills. The Kent Maxecon mill (Fig. 11) consists of a heavy floating ring *a* held in place by the three rollers *b*, which are pressed against the inner face of the ring by springs *c* mounted on a yoke holding the roll bearings, which pass through the sides of the housing. The upper roll only is driven; as it rotates, it rotates the ring, which rotates the other two rolls. Feed from hopper *d* is introduced through one side of the housing by chute *e*, which deposits it on the downgoing face of one of the lower rolls. Ring *a* rotates at a speed above critical, hence the material clings to the inner side until pushed off by a roll, usually after being partially ground. This product drops out through hopper *f*, ordinarily into a bucket elevator, thence to a screen or air classifier, which returns oversize.

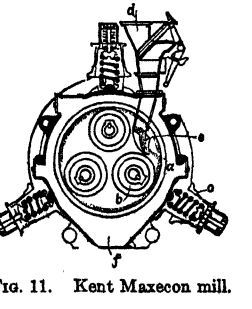

FIG. 11. Kent Maxecon mill.

Performance. See Table 18, items 38, 143, 144, 166.

Sturtevant ring-roll mill has a driven ring (Fig. 12, item *a*) actuated by a spider *b* on gear-driven shaft *c*. Rolls *d* are not driven, but rotate when pressed against the ring by springs *e* with pressures that range from 20,000 to 60,000 lb. SIZES (diam. × face of ring) range from 24×7-in. to 44×14-in.; rolls are 14- to 18-in. diameter; ring SPEEDS are 750 to 800 f.p.m. peripheral; MOTORS, 8 to 75 hp. Rated CAPACITIES for 45×8-in. mill are: barite from <1-in. to 40 *mog*, 8 to 10 t.p.h.; Florida pebble rock to 85% <60-m., 7 t.p.h., or 3 t.p.h. to 95% <100-m.; marble, 3 to 4 t.p.h. to 95% <100-m.

Product of this mill, which has no internal circulation, is relatively granular, particularly if a screen closes the circuit. Modern practice limits its range to between 20- and 80-*mog* for soft or medium-hard nonabrasive materials. POWER CONSUMPTION per ton of product is relatively low, but maintenance is high except on definitely nonabrasive feed.

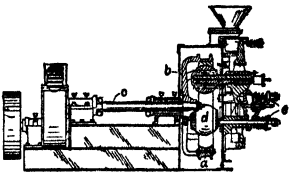

FIG. 12. Sturtevant ring-roll mill.

Horizontal-roller mills have horizontal rings, stationary or revolving, and rollers carried on shafts that are substantially vertical.

Williams mill (Fig. 13) comprises ring *A* mounted near the bottom of a high-sided cylindrical tub *B*, and 3 to 5 rollers *C* carried on shafts ball-suspended within housings *D*, which, in turn, are suspended off-center by pins *E* from yoke *F* on shaft *G* driven by bevel gearing *H* and pulley *I*. Centrifugal force pushes the rollers against the ring when shaft *G* revolves. New feed is introduced through hopper *J* at a rate controlled by star feeder *K*, and is pushed up into the crushing zone by pushers *L*, which rotate with the spindle.

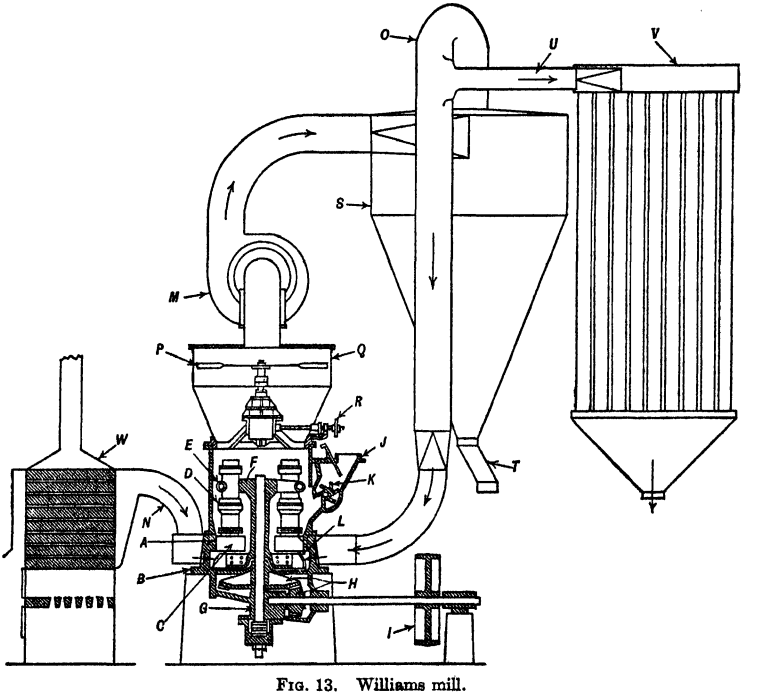

FIG. 13. Williams mill.

Ground material is exhausted by fan *M*, which draws new gas through pipe *N* and return gas through pipe *O* and thence upward through the grinding zone. Vanes *P*, rotating at adjustable speed and gear-driven from pulley *R*, set up a swirl in enlarged chamber *Q*, which throws coarser material against the chamber walls whence it slides back directly into the crushing zone. Fine solid drops out largely in cyclone *S* and is withdrawn through gas-lock *T*. Excess gas with some fine solid is bled off through *U* into air filter *V*. Hot gas may be supplied from furnace *W*, or other source.

Capacities of the standard mill, with a 50- or 60-hp. mill motor and 40-hp. fan motor, are given by the manufacturer as follows: Alum, ground to 99% <100-m., 2 t.p.h.; chalk, ground to 99% <325-m., 2 t.p.h.; lime, ground to 98% <200-m., 4 t.p.h.; pebble phosphate rock, ground to 6% <200-m., 6 t.p.h. The small size, with 15- or 20-hp. mill motor and 10 hp. on the fan, is rated at 12.5% of the production of the standard; and the large, with 125 to 200 hp. on the mill and 75 on the fan at 250% of standard.

Table 2. Sizes and capacities of Raymond roller mills on bituminous coal (*a*) (*Raymond Pulverizer Division, Combustion Eng. Co.*)

Maker's No.	Type	Product, % <200-m.	Capacity, lb. per hr.	Motor hp.	
				Mill	Fan
3036	Low-side	70	3,200	25	15
3036	High-side	85	2,100	20	15
4237	Low-side	70	6,500	50	30
4237	High-side	85	4,400	40	30
5448	Low-side	70	13,500	100	50
5448	High-side	85	9,000	100	50
6669	Low-side	70	30,500	200	100
6669	High-side	85	20,500	200	100
73612	Low-side	70	50,000	300	150
73612	High-side	85	33,500	250	150

a Hardgrove grindability, 55; feed <1-in., allowable moisture 2% without mill drying, 5% with.

Performances. See Table 18, items 10, 27, 118, 126, 158, 181, 184, 200.

Raymond roller mill is similar in general construction. LOW-SIDE MILL utilizes the casing above the rollers as the separating chamber, substantially as in the Williams mill, wherefore product is relatively coarse; HIGH-SIDE MILL makes a rough separation in the bottom of the casing and final separation in the upper part.

RATED CAPACITIES are given in Table 2.

Performances are given in Table 18, items 13, 14, 15, 17, 66, 70, 71, 74, 76, 77, 112, 121, 122, 146–148, 163, 165, 168, 173, 174, 176, 177, 202, 205, 206.

Raymond bowl mill (Fig. 14) has been used extensively as a unit mill for coal pulverizing. It consists of bowl *a* rotated by a vertical shaft through reduction gearing *b* from the motor *c*, which also drives fan *j*. The face of the grinding ring is sloped outward upwardly about 20° from the vertical. Rollers *d* are spring-loaded, but an adjustable stop prevents contact with the ring. Feed enters via hopper *e* and, mounting the side of the ring, causes the rolls to rotate by taking up the clearance; at the same time it is crushed.

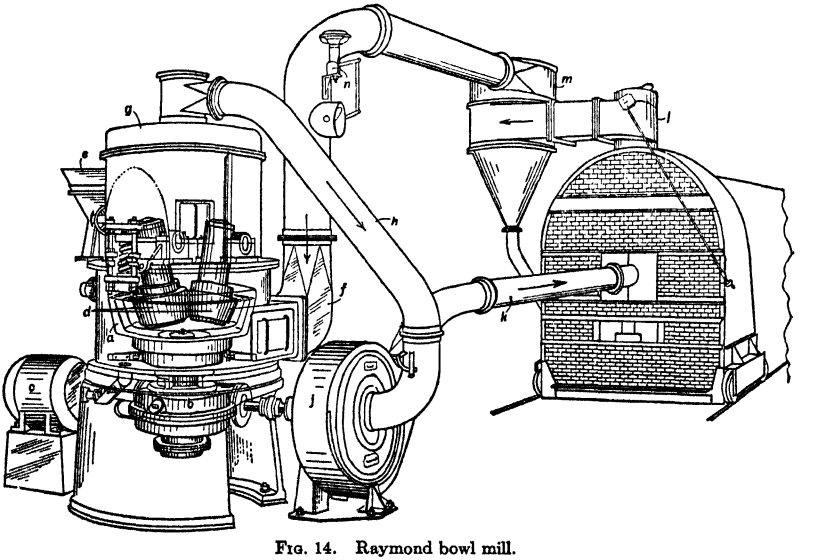

FIG. 14. Raymond bowl mill.

Material thrown over the periphery of the bowl enters an air stream, which comes in through pipe *f*. Oversize is dropped in the classifier in housing *g* (similar to *Q*, Fig. 13) and returns to the mill. Circulating load is estimated as high as 400 or 500%. Temperature in the mill itself is controlled automatically to about 175° F., the drop being due to the amount of heat absorbed in drying the coal. In grinding coal for unit firing of a kiln,

air from the recuperator, drawn through duct l, may have a temperature of 600° F. It is possible to dry and grind coal carrying as much as 15% moisture.

Ground coal and air from the classifier pass through pipe h, fan j, and directly into the kiln through pipe k.

Recuperator and kiln gases are often heavily laden with ash and grit, which may be removed by a dust trap m. Automatic temperature control in response to variation in heat consumption with variation in moisture content comprises a shutter at n on the incoming-air pipe, which is actuated by a temperature controller on a mill thermostat.

Catalogue data are given in Table 3.

Performances are shown in Table 18, items 75, 82.

Table 3. Catalogue data Raymond bowl mills *a*

Maker's No.	Capacity, lb. per hr.	Motor hp.
312	3,550	40
372	6,200	60
412	8,000	75
453	11,500	125
493	16,800	150
573	26,500	200
633	36,500	300

a Grinding bituminous coal; Hardgrove grindability, 55; feed <1-in., 8% initial moisture; product, 70% <200-m.

Griffin mill (Fig. 15) has a fixed horizontal grinding ring a and a single roll b mounted on a long shaft depending from the driving head c. The roll is fixed rigidly to the long shaft; the shaft rotates in universal joint d. Rotation of drive-head c, effected by driving pulley e, causes the roll to swing outward against the die ring. Feed introduced through hopper f drops into the pan below the die ring and is picked up by scraper shoe g, attached to the bottom of roll b, and is thrown against the die ring, ahead of the roll. The action of the roll throws material against fixed screen h, comprising usually an inner coarse cloth protecting an outer finer cloth. Material passing the screen drops through ports i into a discharge hopper.

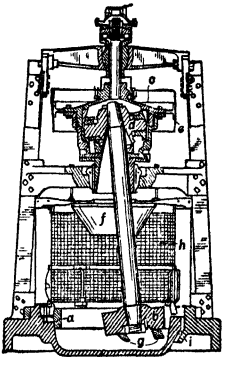

FIG. 15. Griffin mill.

Catalogue data are given in Table 4.

Performances are given in Table 18, items 34, 150.

Use. Formerly the Griffin mill was used extensively for finish grinding of cement clinker; it produces a large quantity of fines as compared with other mills of the same general type, but maintenance is high, the single-roll feature tends to cause marked vibration, and capacity is low. Present use in cement plants is limited to preliminary grinding; use for fine grinding is confined to the softer materials.

Table 4. Catalogue data on Griffin mill

Ring diam., in.	Roll diam., in.	Roll pressure, total lb.	Speed, r.p.m.	Motor, hp.	Capacity
30	16	.....	220	.....	.....
30	18	7,000	210	30	*a*
40	24	15,000	175	75 to 85	*b*

a Limestone: 2 t.p.h. from <3/4-in. to 80% <200-m.; phosphate pebble, 2 to 3 t.p.h. to 90% <100-m.

b Limestone: 4 to 6 t.p.h. from <3/4-in. to 80 to 83% <200-m.

Bradley Hercules mill (Fig. 16) is of horizontal-roller type with screen-controlled discharge. Die ring a is mounted on the wall of a shallow tub b, the walls of which extend upward, and consist of an inner coarse and outer finer ring of screen suitably supported by uprights d and rim e. Spindle f, pinned and stuffed at the bottom into the tub casting, is surrounded by a drive tube g keyed to bevel gear h which runs in a bearing in spider i carried on cast housing j from base b. The lower end of tube g carries and drives yoke k, from which depend roll housings l supporting three rolls m. Bevel pinion n on shaft o actuates bevel gear h at 125 to 135 r.p.m., causing the 22-in. rollers to press against the 66-in. die with a pressure of about 15,000 lb. each. Feed is introduced through box p, carried on yoke k, and flows thence through three pipes q to points directly ahead of each roller. Plows on the lower ends of q also throw material from the bottom of pan b up against the die ring. The crushing action throws the contents against the screens; material passing discharges through ports r.

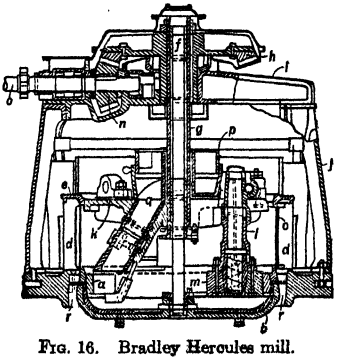

FIG. 16. Bradley Hercules mill.

Performances are given in Table 18, items 37, 48–50, 139.

Use. The mill is employed principally as a preliminary mill to grind cement rock and clinker. It is not adapted to fine grinding, since it relies upon screens for making the separation. Maintenance, particularly of screens, is high when grinding clinker and other hard and abrasive materials. Aperture of the fine screen cloth is limited as to fineness to about 20-m., although 6- to 10-m. is more economical from the standpoint of maintenance. The mill requires between 300 and 350 hp. CAPACITY grinding raw mix for cement manufacture, taking <1 1/2- or 2-in. feed, is 40 to 60 t.p.h.; grinding cement clinker it is 135 to 200 bbl. per hr., both through 6- to 10-m. screen. Feed must be dry, or screens will blind and capacity will be greatly reduced. A smaller unit, requiring about 50 to 75 hp., has a capacity of 5 to 10 t.p.h. grinding limestone for agricultural purposes (see Sec. 3, Art. 24).

The mill is sturdy, the parts are readily accessible, and screens are easily replaced, but lubrication is difficult on account of the complexity of the transmission, and bolts must be tightened frequently to prevent breakage.

Roller mills have a definite and large field in grinding soft materials and those of medium hardness and nonabrasive character to medium (the screen mills) or moderate fineness (the air-swept mills). Economic limit for the screen mill is >20-m.; the best range for the air-swept is 50 to 80% <200-m. Hard and abrasive materials cause roll faces and dies to corrugate, whereupon capacity diminishes and vibration becomes excessive. Renewals of rollers and dies requires more or less dismantling.

Capacity of roller mills varies roughly as the cube of the diameter of the die ring.

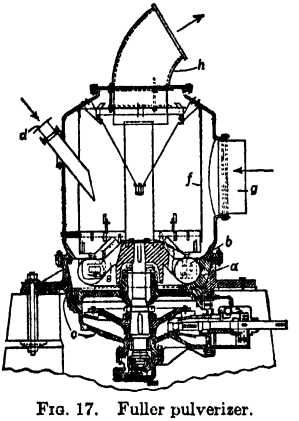

FIG. 17. Fuller pulverizer.

Ball-bearing pulverizers

These machines comprise essentially a plurality of large heavy balls rotating in conformed circular races around a central vertical axis. The races are both stationary and moving, according to the machine. Separation is made inside the housing, outside, or both.

Fuller pulverizer (Fig. 17) comprises a large concave die ring *a*, on which four large balls *b* are rotated by pushers mounted on a central vertical shaft, carried in a step in the bottom of the cylindrical frame *c*. The weight of the balls and the centrifugal force exerted by the pressure of the balls on the vertical side of the die ring creates the crushing and grinding action. The material to be ground is fed into the die ring through spout *d* from a suitable feeder; the pulverized material is raised into the classifying space within the inner housing *f* by a combination of gas blown in through *g* and forced down around *f* and through the grinding zone, and the action of fan blades carried on the pusher arms. Coarse material returns to the crushing zone along the walls of *f* by gravity; finished material is exhausted through *h* and passes thence via the exhaust fan to a cyclone or, in the case of fuel, to the firing zone. Another form essentially replaces inner housing *f* by a screen, and carries an exhauster fan in the classifying space, which fan blows material, raised from the grinding zone by the yoke fan, against the screen. Undersize drops through annular openings surrounding the grinding ring and is swept to a discharge spout. SIZES (diam. of the ring) range from 33- to 70-in.; corresponding rated CAPACITIES are from 1/2 to 15 t.p.h. grinding <1 1/4-in. soft limestone (<2% moisture in screen mills and <4% for the air-swept mills) to approximately 80% <200-m.

Performances are shown in Table 18, items 6, 28, 63, 64, 125, 128, 167, 171, 199, 219.

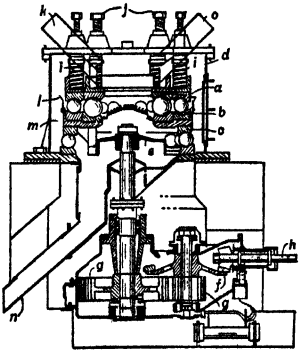

FIG. 18. B.&W. three-race mill.

B.&W. three-race mill (Fig. 18) comprises the three races *a*, *b*, *c*, each with a complement of nonconstrained balls, all enclosed in a cylindrical box *d* through which material to be ground flows in a tortuous path over the races in the order named and out of the mill without undergoing any size separation. The balls are actuated by rotation of table *e*, effected through bevel gears *f* and spur gearing *g* from a suitable driver on shaft *h*. The lower segments of races *a* and *b* and the upper segment of *c* are attached to table *e* and rotate with

it; the other races are stationary. Rotation of the movable races causes, of course, rotation of the balls. Pressure in the races is controlled in part by springs *i* and compression bolts *j*. Feed enters through spout *k* and travels successively outwardly across races *a* and *b*, and thence over crowding baffle *l*, downward through annulus *m*, and inwardly across race *c* into discharge chute *n*. Separation of finished material is made externally on a screen or classifier, and oversize is returned through spout *o*. The large balls in race *a* are 12 1/4-in., the others 9 1/4-in. Spring pressures are varied according to the material being ground; for coal, 1,500 lb. per ball is recommended. Manufacturer's data are given in Table 5.

Table 5. Catalogue data on B.&W. three-race mill *a*

Maker's No.	Tons per hr. *a*			Estimated hp.
	To 90% <200-m.		To 96% <200-m.	
	H 50 *b*	H 70 *b*	H 70 *b*	
220	5.5	7	6	117
226	8.3	12	10	180
238	12.5	17	15	270
346	18.7	26	22	410
360	26	36	30	560
366	31	43	36	680

a Grinding limestone. *b* Hardgrove grindability.

B.&W. unit mill (Fig. 19) comprises the single row of balls *A*, driven by the lower segment *B* on table *C*, which is supported on and driven by spindle *D*, actuated by bevel gearing *E*, shaft *F*, and pulley *G*. Springs *H* regulate pressure in the races. Size of discharge is regulated by the internal classifier *I*, comprising a vertical squirrel-cage fan, actuated by spindle *D*. Feed enters through hopper *K* and falls into the cone-shaped space *L* leading to the inner side of the ball race; it passes thence outwardly through the race, where it is picked up by a gas stream blown in through pipe *M*. The stream passes thence up along the walls in the annular space *N*, and thence inward through the vanes of *I* and out through pipe *O*. Coarse material in the stream is dropped out by the combined effect of decreased velocity and centrifugal swirl in the space surrounding fan *I*, and drops back into *L*, the rejection size being determined by adjusting the vanes of *I*. Outside piping varies according to requirements; see discussion of Figs. 6, 13, 14. The machine is made in 15 sizes with capacities on bituminous coal ranging from 1 to 10 t.p.h.

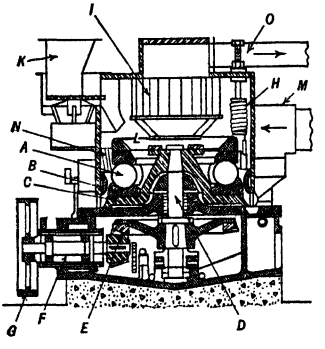

FIG. 19. B.&W. unit mill.

A two-race mill of the same general type as Fig. 18 (the lower race absent) is also made, having provision for independent regulation of spring pressures on inner and outer races. PRESSURES range from 1,200 lb. to 2,000 lb. per ball on the outer race, and 2,000 to 2,700 lb. on the inner. This mill is operated either air-swept or with gravity discharge; circulating loads are estimated at 500 to 1,000% for the former and 400 to 1,000% for the latter. SPEED of the larger mills is about 80 r.p.m.; higher for the smaller.

Use. The ball-bearing mill is used extensively and satisfactorily for soft materials; maintenance is high with hard and abrasive material, and replacement of wearing parts is difficult because of the considerable disassembly that must be done.

Performance. See Table 18, items 29, 30, 43, 44, 62, 79, 80.

At SPOKANE PORTLAND CEMENT CO. (*28 #7 PQ 80; 31 #1 PQ 69*) a No. 238 B.&W. mill ground 20 to 25 bbl. clinker per hr. to a specific surface of 1,850 sq. cm. per gm., drawing 240 kw. A No. 360 mill averaged 60 bbl. per hr. to 1,900 sq. cm. per gm.; the mill drew 330 kw. and the elevator and air classifier 125 kw. The same mill ground 93 bbl. per hr. to 1,300 to 1,400 sq. cm. per gm. (83 to 84% <325-m.). LIFE of grinding ring ranged from 2 to 3 mo. Average COST of a ring was $500 (1938), four being required. Ball cost, $965 per set.

3. TUMBLING MILLS

Mills in this category include the batch mill, ball and pebble mill, rod mill, compartment mill and other modifications of the rotating-drum principle. The basic method of grinding is by tumbling of the media induced by axial rotation of the container assembly; the paths of the media may be free fall (CATARACTING) or rolling (CASCADING) with sufficient force to pulverize the material, which is mixed with and moves with the media.

Sec. 5 discusses the general theory of operation of tumbling mills, and presents operating data on wet grinding. The basic principles in dry grinding are the same as in wet grinding, but the application and the method of operation with auxiliary apparatus are quite different.

Batch mill

The batch mill consists of a hollow rotatable container, usually cylindrical, but also conical, and occasionally cubic, spherical, or other shape; unlined or lined with close-fitting porcelain blocks, cobbed flint bricks, buhrstone blocks, or metal-plate lining. The grinding media are pebbles, porcelain balls, or metal balls, depending upon the application. Material to be ground is charged through the manhole, in quantity about 2/3 of the struck volume occupied by the grinding media, or about 1/4 of the mill volume; this quantity is sufficient to fill the voids in the tumbling charge, but not enough to cause excessive cushioning. The closed mill is run for a time predetermined to grind to specified fineness. Unloading is done by placing a grate over the manhole and turning the mill so that the product drops through it. To prevent excessive dust in discharging, a cover or hood is usually placed either around the whole mill, or around that part which includes the manhole.

Shape. Fig. 20 is typical of a small cylindrical batch mill built as a self-contained unit. The particular form pictured is equipped with a valved draw-off pipe *a* for unloading wet pulp. One bearing is normally of trunnion type *b*, which permits control of pressure during the grind, and control of the composition of the gaseous atmosphere, determination of temperature in the grinding zone, etc. Shell shapes other than cylindrical tend to cause the motion of the contained solids, both media and material, to have components parallel to the axis of rotation (Fig. 21), which, in general, minimizes segregation of the media by size, and makes for quicker and more complete mixing of materials. Shells are sometimes jacketed for temperature control, provision being made for circulation of heating or cooling fluids.

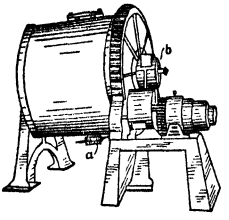

FIG. 20. Cylindrical batch mill.

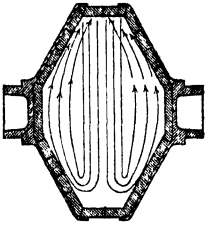

FIG. 21. Conical batch mill.

Lining. Metal lining is preferable from the standpoint of range of choice as to shape, ease of placing, and durability (see Sec. 5, Art. 5). Silex or buhrstone lasts longer and offers a rougher surface than porcelain; this decreases slip, resulting in better grinding action, but the blocks are more irregular and do not fit together as well as porcelain, so that such a liner is harder to clean. This is important if the mill is used to grind different colors, and the color is changed frequently.

Media. Crushing effect and power consumption are roughly proportionate to the specific gravity of the media. Steel balls chip less than flint or porcelain, hence consumption is less; they are smoother; because of their higher sp. gr., smaller sizes can be used for a given necessary impact, and hence more grinding surface is made available; they are normally used unless metal contamination is not permissible. Usual sizes of media chosen for different sizes of feed are given in Table 6. See also Sec. 5, Art. 6.

Imported flint pebbles, size A-1, approximately 1/2-in. diameter, average 100 pebbles to the pound; size 00, ranging from 1-in. to 1 1/2-in., average 8 to the pound; No. 3, 2 1/2-in. to 3 1/2-in., average 0.75 per pound. Porcelain balls, 1/2-in., average 133 per pound; 1 1/4-in., 10 per lb.; and 3-in., 0.9 per lb. Steel balls, 1/8-in., average 3,450 per lb., 1/2-in., 52; 1 1/4-in., 3.3; 3-in., 0.25.

Table 6. Sizes of grinding media for batch mills

Feed, mesh	Size of pebbles, in.	Size of steel balls, in.
<1/4-in.	1 1/2 to 2	1 to 1 1/2
<10-m.	1 to 1 1/2	3/4 to 1 1/4
<20-m.	3/4 to 1	5/8 to 7/8
<100-m.	1/2 to 3/4	1/2 to 5/8

Capacity is determined by the time that it takes to grind, plus charge and discharge time. Grinding time depends upon hardness of the material, moisture content, size of feed, fineness of product, size of mill, size, shape, and weight of the grinding media employed, speed, character of lining, and weight of material charge. For discussion of the effects of various factors, see Sec. 5. In general, the more power the mill can be made to draw, with charge of a given material in, the shorter the grinding time. It ranges from a few minutes for easily reduced substances and relatively coarse product to several days for material hard to reduce, and an extremely fine product.

Rate of reduction, as measured by limiting sizes, is a matter of diminishing returns. A 7×8-ft. silex-lined mill, charged with 3,000 lb. <14-m. dry feldspar and 13,000 lb. of flint pebbles drew 33 hp. After 1 hr. the product was 7% >65-m., 48% <325-m.; after 4 hr. it was 0.06% >100-m., 79% <325-m.; after 7 hr., 0.01% >140-m., 86% <325-m.

It follows that reduction rate is less than in a continuous mill, and much less than in closed-circuit grinding in a continuous mill; see Sec. 5, Fig. 9 and discussion, and Art. 12.

Catalogue data are given in Tables 7 and 8.

Performances are shown in Table 18, items 21, 56, 98, 109, 110, 161.

Table 7. Catalogue data for cylindrical batch mills *c*

Size, diam. ×length, ft.	Power required to run, hp.*b*		Tumbling charge, lb.			Charge of dry sand, lb.*a*				R.p.m.	
			50% filled		33 1/3% filled, unlined, steel balls	Silex and pebbles	Porcelain lining and balls	Unlined, flint or porcelain media	Unlined, steel balls	Lined	Unlined
	Lined	Unlined	Silex lining, flint pebbles	Porcelain lining and balls							
2×3	2.2	6	254	291	913	130	145	230	225	36	32
3×4	7.5	12	939	1,024	2,750	470	510	690	700	26	23
4×5	11	18	2,310	2,465	6,090	1,155	1,230	1,520	1,550	23	19
5×4	14	27	2,955	3,135	7,690	1,480	1,570	1,925	2,000	21	17
6×5	22	40	5,605	5,885	13,800	2,800	2,940	3,450	3,500	19	15
6×10	38	68	11,685	12,145	27,200	5,840	6,070	6,800	7,100	19	15
8×10	67	200	21,700	22,370	48,700	10,850	11,180	12,180	12,000	17	14
9×12	135	. . . .	37,440	38,415	82,800	18,720	19,210	20,700	19,000	15	12

a 100 lb. per cu. ft.
b Add about 40% for starting. Figures are approximate only.
c After Patterson Foundry & Machine Co.

Uses. Batch mills are used for grinding colors, enamels, lacquers, ceramic materials, pigments, drugs, chemicals, minerals, and metals. The mill has largely supplanted the buhrstone mill; it is normally more efficient, has more capacity per unit of floor space, and lower power and maintenance costs. The buhrstone mill produces a more desirable particle shape in some cases. The batch mill does not require preliminary mixing of charge ingredients, as does the buhrstone. Essentially the mill is suited to intermittent grinding operations of variable character and small tonnage; or where mixing or concomitant chemical reaction is an important part of the operation.

Table 8. Catalogue data for conical batch mills *b*

Size, diam. × length, ft.	Pebble charge, lb.	Charge dry sand, lb.	R.p.m.	Hp., running *a*
3×2	615	300	30	3
4×2	1,380	550	25	5
5×3	3,100	1,400	21	10
6×4	6,200	2,800	17	17
7×5	11,000	5,000	15	27
8×6	17,000	8,200	13	38

a Add about 40% for starting. *b* After Hardinge Co.

Jar mills are small batch mills used primarily for research and test purposes, although certain products required in small amounts are ground commercially in this type of mill. The jar is usually made of vitrified porcelain or wear-resisting metal, equipped with a closely fitting cover; charge is light. The support is a cantilever shaft carrying a frame into which one or more jars is clamped, or the jar is laid on two parallel rollers, and driven by friction. Jar sizes range from 5×5- to 24×24-in. outside with charge capacities of 1 to 80 lb.

Rod mill

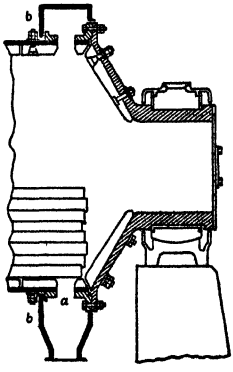

FIG. 22. Peripheral-slot discharge for rod mill.

Dry-grinding rod mill is constructed essentially like the wet-grinding rod mill, Sec. 5, Art. 7.

Discharge. Action of material undergoing reduction in dry or semidry state is much more sluggish than when mixed with enough moisture to become fluid; hence provision must be made in continuous dry grinding to move the material through the mill fast enough that proper grinding action occurs. The usual expedients are to substitute a heavy grate for the discharge-end head (*e.g.*, as Sec. 5, Fig. 55); to use an end gate that leaves an annular opening (Sec. 5, Fig. 26); or to discharge through peripheral slots *a*, Fig. 22. Hood *b* surrounds the discharge ports to confine dust.

Cone-end rod mill (as Fig. 22) permits feed to work into the rod mass over the entire vertical section of the rod load, since the rods keep in vertical alignment. This is helpful in dry grinding, because it aids in getting the feed into the load and in building up a head behind it, which is necessary owing to the sluggish nature of the dry material and its relatively high angle of repose.

Use. The field of the mill in dry grinding is limited. Its best application is in grinding hard feed of 3/4- to 1-in. limiting size, or soft feed 1 1/2- to 2-in. limiting, in open-circuit to 4- or 6-m., in making industrial sand. In such service the rod mill has the advantage of being able to grind, without packing, materials containing considerable moisture, but not enough to render the mass fluid.

The mill has been used in making sand-lime brick, where a mixture of sand and lime, with sufficient water added to make it damp, is lightly ground and mixed. The rods break down the coarse sand and do a thorough job of mixing and coating the sand particles with the lime.

Rod mills have been operated in closed-circuit with air classifiers and screens, but if a product finer than 10-m. is wanted, better results can be secured in a ball mill.

The mill has been used to grind coke, as for carbon electrodes; it makes a uniform product of desirable shape characteristics; it is operated open-circuit, or closed-circuit with a screen.

Table 9. Catalogue data for dry-grinding rod mills (*after Hardinge Co.*)

Size, diam. × length, ft.	Weight, lb.			Speed, r.p.m.		Horsepower				Tons per hr. from <3/4-in. to 10-m. *a*
						To run		Motor		
	Mill	Lining	Rod charge	Min.	Max.	Min.	Max.	Min.	Max.	
2×4	5,000	3,000	1,700	32	43	5	6	5	7 1/2	1
3×6	10,000	10,000	6,000	25	34	15	18	15	20	3
3×8	12,000	11,000	8,000	25	34	19	24	20	25	4
4×8	18,000	20,000	14,000	21	29	33	40	35	40	6
4×10	18,000	22,000	18,000	21	29	43	53	50	50	8
5×10	32,000	31,000	27,000	18	25	60	80	75	100	12
5×12	35,000	34,000	33,000	18	25	75	95	75	100	15
6×10	42,000	41,000	40,000	16	19	90	115	100	125	18
6×12	45,000	44,000	50,000	16	19	110	140	125	150	22
7×12	58,000	57,000	68,000	14	17	150	185	150	200	29
7×14	62,000	61,000	80,000	14	17	175	220	200	250	34
8×12	71,000	70,000	90,000	12	15	190	240	200	250	38
8×14	76,000	75,000	105,000	12	15	225	280	250	300	44
9×12	87,000	85,000	115,000	11	13.5	240	300	250	300	47
9×14	97,000	95,000	135,000	11	13.5	280	350	300	350	55
10×14	110,000	108,000	170,000	10	12.5	340	430	350	500	67
10×20	125,000	123,000	280,000	10	12.5	485	610	500	600	110

a Average rock.

The rod mill is not necessarily a better granulator than a ball mill, if the latter is operated closed-circuit with a proper classifying device. However, in open-circuit, when no tramp oversize is permissible, the rod mill is supreme in the tumbling-mill field, as it does not overgrind while keeping coarser sizes within the required range. It cannot handle high circulating loads.

Catalogue data are given in Table 9.

Performances are given in Table 18, items 85, 86, 88, 102.

Ball mill

The ball mill is most widely used of all types of pulverizers. It is simple and rugged in construction, not difficult to operate reasonably well, and maintenance against wear in grinding requires less delay and labor than in any competing machines. For pulverizing soft nonabrasive materials, however, the fixed-path mills (Art. 2) consume less power, and with maintenance a minor factor, they have the advantage. The ball mill is not directly applicable in dry grinding, if there is enough moisture in the feed to induce coating of balls or packing of charge. Drying must be resorted to in such a case. Dry discharge, from predried feed or resulting from in-mill drying, is necessary in operations with classifiers. Hence for hard and abrasive materials and products finer than 10-m., the ball mill qualifies on the ground of a maintenance cost low enough to overcome its handicap in power consumption; for fine grinding it is pre-eminent in the hard-material field, and worthy of serious consideration for soft materials.

Action in dry-grinding ball mills. The general principle of operation of dry-grinding ball mills is similar to that of wet mills (Sec. 5, Art. 2), but there are several important differences, *viz.*, flow characteristics, cushioning effect, ball-coating tendency, and response to a small quantity of moisture.

Flow. Dry material is definitely resistant to flow, owing to its great internal friction. This results in a large angle of repose, which requires either a steep gradient for gravity flow or a high pressure head in order to move material into and through a tumbling mill. A steep gradient is obtained in the

mill by increasing the diameter-length ratio of the shell, and by some form of peripheral discharge (see *Rod mill*). Air sweeping has somewhat the effect of an elevator at the discharge end to lift material into the discharge trunnion (but it has the correlative effect of removing the fine material that tends to lubricate the load, and thus increase resistance to flow. *Ed.*). See also *Krupp mill.* It is much easier to overload a dry mill than a wet one. A steep gradient into the mill is obtainable only by using a large or a short feed trunnion; the former robs the mill gradient; the latter requires a special bearing. Hence some form of positive feeder, *e.g.*, a screw conveyor, is ordinarily used, with a small trunnion to aid mill gradient.

Cushioning is the reaction of a mass of comminuted solids to an impact; it consists in a readjustment of the mass in such a way as to distribute the energy over the large interfacial contact surface within the mass and to dissipate it in friction and local fine pulverization, without any breakage commensurate with the energy expended. It is a serious hindrance to effective fine grinding in any type of mill, but tumbling mills are particularly subject to its ill effects. The remedy is to reduce the interstitial load to a minimum consistent with the requirement of always maintaining some material between contacting grinding surfaces. From a practical standpoint this means flowing tonnage through the tumbling charge as rapidly as is possible without building up circulating load to such an extent that the interstitial space becomes overcrowded and the excess rides the surface of the tumbling charge. Air-sweeping is of benefit here, since it removes much of the fine material as and at the point in its travel through the mill at which it is formed, thus taking out of the interstitial load both volume and impact-absorbing surface.

Ball coating means the formation of hard, coherent layers of compacted fine feed material on the surface of the grinding media. It is not a moisture effect in the ordinary sense, since it happens readily in dusty material. The cause is unknown. The effect is to substitute a relatively soft grinding surface for the original hard one, and thus decrease grinding effect markedly (see Sec. 5, Art. 6). One remedy, effective with some materials, notably cement clinker, is to introduce a fatty material, or a hydrocarbon containing an acidic ingredient, in small quantity with the feed (see Sec. 3A, Art. 5). Air-sweeping a mill usually eliminates the tendency to ball coating.

Speed; ball charge; power consumption. Owing to the high internal friction of the dry interstitial material, ball charges carry higher on the upcoming side of a dry ball mill than in a wet mill. As a result dry mills are operated at lower peripheral SPEEDS than wet, usually about 10%. BALL LOADS must be smaller in the dry mill (35 to 45% of mill volume) to prevent cataracting, with consequent hammering of the breast of the mill and loss of fine-grinding capacity. BALL R TIONING (Sec. 5, Art. 6) is equally important in both mills. POWER CONSUMPTION, on the other hand, is about the same for shells of the same sizes wet and dry, although it is higher per unit weight of tumbling charge in the dry mill, despite the reduction in speed, and is from 10 to 20% higher per unit of a given fine material produced in a mill operating properly. If a trunnion-discharge mill is run without means to aid throughput, power consumption per ton ground to a given mesh may run 50 to 65% above that in wet milling.

Length of shell. Early practice in fine dry grinding was to use a large length-diameter ratio. This was wasteful of power, but was necessary if a small limiting size of product was imperative, because there was no effective means of separating finished from unfinished material during the operation. Compartmentation of the shell, with rationing of the ball load to the duty in successive compartments, was the first approach to a cure. Modern air classifiers would seem to be, if not a better one, a valuable auxiliary, and modern practice is recognizing the fact (see Sec. 3A, Art. 7; Sec. 9, Art. 11). If ultrafineness is necessary, a long compartmented mill is probably the better installation, at least for the finishing grind.

Dry *vs.* wet grinding. POWER CONSUMPTION in wet grinding is 60 to 90% that in dry. BALL and LINER CONSUMPTION in dry work is 10 to 25% that in wet, and wear on the auxiliary apparatus is also less, not improbably owing to less oxidation in the dry circuit, and less metal-to-metal contact. CAPACITY of a dry mill per unit of mill volume and /or per unit weight of tumbling charge is less than in wet work. The balance between the resultant COST differences is close enough for the choice between the wet and dry methods to swing on the efficiency of the auxiliary and subsequent operations. For a number of years mechanical wet classifiers were enough more efficient than dry and wet blending more accurate and convenient to swing the large majority of cement plants to wet grinding of raw mix, despite that the water added had to be evaporated in the kiln; now (1943) both dry classification and dry blending are so improved, and air sweeping has so increased moisture tolerances, that the balance has swung in favor of dry work in several cases. In general, today, wet grinding is adopted, if the following process is wet, otherwise dry. The wet plant is easier to keep clean, but the dry can be kept as clean as or cleaner than the wet. Dry grinding is more flexible than wet, which is an advantage when products of different characteristics are to be taken successively from the same circuit.

Short *vs.* long mills. The short tumbling mill or a fixed-path mill is ordinarily used for the first stage in multistage dry work for products not finer than, say, 20- or 30-*mog.* There is a decided trend in finishing grinds of fine feeds to use short tumbling mills with classifiers, although the great majority of existing installations for such service are long mills. Short mills are structurally the grate-type wet mills (Sec. 5, Art. 10) modified as to feeding arrangement, or arranged for peripheral-slot discharge; or open-end Conical mills. Capacity of mills used for both wet and dry work is rated by manufacturers generally at 60 to 90% of wet-mill ratings.

Preliminator (Fig. 23) is a short ball mill, commonly used in dry service, characterized by peripheral-slot discharge, the two-diameter shell *b*, the large-diameter short feed-end trunnion, and chute feed. The effects of the reduced diameter at the discharge end are (*a*) to keep the larger balls at the feed end and (*b*) to reduce power consumption by reduction in ball load and torque in the part of the mill where high in-load pressures and free-fall impacts are unnecessary. Estimating data for clinker grinding, furnished by Allis-Chalmers Co., are given in Table 10.

Performances of cylindrical ball mills are given in Table 18, items 78, 114, 115, 130, 135, 217.

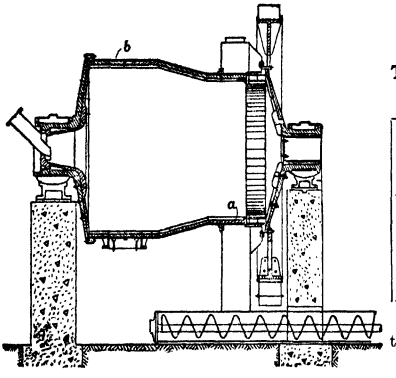

FIG. 23. Dry-grinding ball mill (PRELIMINATOR. *Allis-Chalmers Mfg. Co.*).

Table 10. Estimating data for dry Preliminator (*after Allis-Chalmers Mfg. Co.*)

Size, diam. × length, ft.	Ball charge, lb.	Capacity bbl. per hr. *a*	Nominal motor size, hp.
5×5	10,000	30	75
7×5	18,000	51	125
8×7	35,000	105	250
9×9	61,000	180	400
9 1/2×10	73,000	235	500

a Feed, <1-in. clinker of average hardness; reduced to 95% <20-m. in closed circuit. Barrel = 376 lb.

Screen-discharge ball mill

Krupp ball mill (Fig. 24) was the first of this type. Many Krupp mills are still in operation, mainly in cement plants. Newer plants are being equipped principally with other types, unless special conditions peculiarly adapted to this type prevail. The mill was never used to any great extent in metallurgical milling, the exceptions being for dry grinding prior to roasting and in crushing ores containing coarse metallics for sampling. In the latter service, metallic particles too coarse for accurate sampling are retained, and can be weighed, melted down, and bullion-sampled.

The inner shell containing the grinding media is built up of hard-iron or alloy-steel wearing plates *a*, containing coarse perforations as shown. These plates are bolted between heavy cast heads which are, in turn, fastened to a heavy through shaft. One end of the shaft carries a large gear, driven by means of the pinion and pulley shown. Surrounding the perforated plates *a* are circumferential sections of punched-plate screen *b*, with relatively coarse aperture, and surrounding this a ring of fine screens *c*. Both sets of screens are bolted to the heads and revolve with them. The revolving part is all contained in a sheet-iron housing *d*, having a hopper bottom for discharge of screened material. In operation, feed is introduced at one end of the cylinder, at the center around the shaft. When sufficiently ground by the balls to pass the large apertures in the grinding plates *a*, the material falls through to screen *b*. That part of the ground material that will pass the relatively coarse meshes in screen *b* does so,

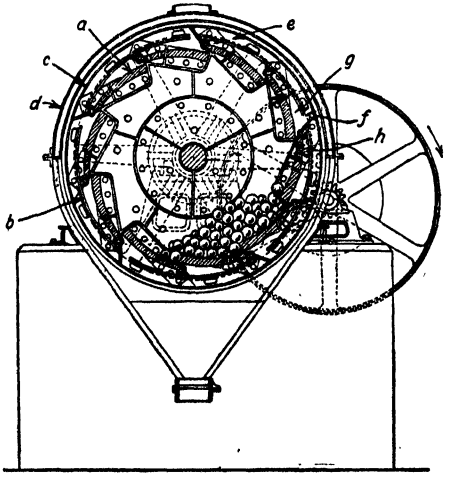

FIG. 24. Krupp ball mill.

and is subjected to screening by the fine screens *c*. The material that passes through these fine screens discharges from the hopper finished. That material which will not pass through screen *c* is carried around in the space between *b* and *c*, to the position marked *e*, when it falls through opening *f*, into chamber *g*, and joins material that passed the heavy liner plates but would not pass *b*. From chamber *g* both materials pass through an opening at *h*, back into the crushing chamber, and are there again subjected to crushing action by the balls. Table 11 gives data on commercial sizes of this machine as furnished by one manufacturer. The balls used are the same as those in other ball mills.

Table 11. Sizes and weights of Krupp ball mills
(*Catalogue data*)

Size numbers	Weight without charge, lb.	Weight of balls, lb.	Capacity on cement clinker to 20-m. bbl. per hr. *b*	Horsepower required *a*
7	29,500	3,000	12 to 16	30 to 40
8	41,100	4,500	18 to 24	40 to 50

a From 100 to 120% additional power is required momentarily in starting.

b When pulverizing to pass 20-m., from 30 to 40% will pass 100-m.

Performances are given in Table 18, items 39, 40, 51. The mill has the advantage of being able to take a wider range of feed sizes than the ordinary ball mill. The product is relatively uniform and devoid of superfines. Typical screen analyses for clinker grinding are:

Screen:	1-in.	3/4	1/2	3/8	1/4	8-m.	16	30	50	100	200	<last.
Feed, %	1.7	1.2	5.0	5.2	23.2	32.5	21.1	6.8	....	...	....	3.3
Product, %....		...	...	...	....	5.5	30.5	17.5	14.0	7.5	11.0	14.0

Unless the feed is quite dry, screens clog quickly. Screen wear is localized and high, and screens break frequently. Cleaning and repairing screens requires stoppage, and removal of the hood. Fineness of product is substantially unaffected by change in feed rate; to effect such change requires screen change. Ball and liner consumption are heavier than for screenless mills.

Smidth Kominuter (Fig. 25), like the Krupp mill, consists of a generally cylindrical revolving stepped grinding shell *a* within a revolving compound guard screen *b*, rotating

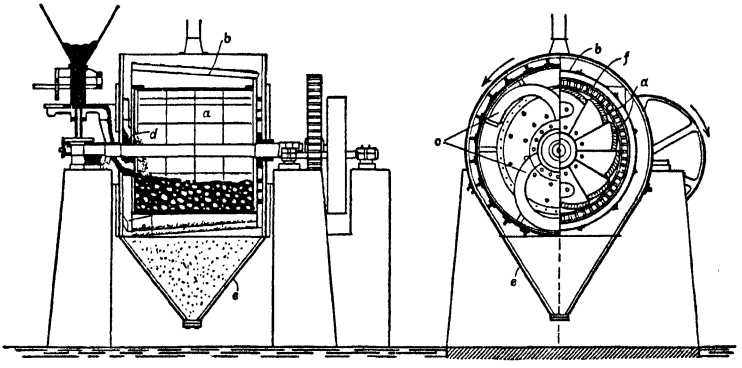

FIG. 25. Smidth Kominuter.

with the shell, and flared toward the feed end to transport oversize to the spiral-pipe elevators *c*, which return it to the feed inlet *d*. Undersize of the outer finer screen falls into discharge hopper *e*. Unlike the Krupp mill, material being ground must pass from one end of the mill to the other where it discharges through a peripheral grate *f*. This makes it possible to regulate fineness to some extent by a change in feed rate. The mill is sensitive to overloading. SPEED must be kept below cataracting to prevent the balls from striking the central shaft. FEED must be dry or be dried during grinding (see Art. 2). Maintenance requires considerable dismantling, and is relatively frequent because it involves screen replacements. CAPACITY and POWER CONSUMPTION are about the same as for the Krupp mill.

Performances are given in Table 18, items 41, 42.

The Kominuter is somewhat more flexible in operation, and makes a finer product than the Krupp mill, but is more difficult to repair.

Ball-tube mill

Ball-tube mill is a long cylinder (length ordinarily two or more times diameter) with generally plane or conical ends, usually trunnion-supported, with trunnion feed and discharge. It may or may not have a grate at the discharge end. Grinding media are steel or cast-iron balls, punchings, or specially shaped castings, the size depending upon the size of feed; usual maximum size of charge for 10-m. feed is 1 1/2-in. diameter, about 3/4-in. for 20-m. or finer. Feed size is normally less than 1/8-in. limiting, unless the mill is compartmented. Grates, if used, are ordinarily of lifter type (Sec. 5, Figs. 45, 47, 54, 57).

Use of tube mills for dry grinding is dependent upon the fact that most finely powdered dry material while undergoing agitation in the presence of a gas becomes sufficiently dilated to acquire semifluid character, so that flow can be maintained even with the low gradient possible in a long mill.

Argument on the use of classifiers in dry grinding in long mills still continues after many years of experience with the mill. Early practice in clinker grinding, where it is almost universally used for finishing, was to run open-circuit. Thus run, most (70 to 90%) of the reduction to limiting product size is done in the first quarter of the length. This means that three-quarters of the energy input is expended, so far as limiting size specifications are concerned, in grinding 10 to 30% of the feed. Under such an analysis, there is no question but that closed-circuiting with a classifier is indicated. On the other hand, the mill does a great deal of production of surface while reducing this 10 to 30% oversize to the specified limiting size, and when the product specification also includes a high surface minimum, the necessary classifier and elevating equipment becomes extensive, and expensive both to instal and operate. The modern trend in clinker grinding appears, however, to be toward classifier circuits and shorter mills except when superfine cements are being made (Sec. 3A, Art. 7). When classifiers are used, mills are normally grated in order to increase throughput; the result is, ordinarily, to increase steel consumption, because of the light interstitial filling in the tumbling load near the grate. When a so-called plastic (smooth-textured) product is wanted, the mill is run open-circuit.

Feed rate must be uniform. There is a definite tendency for mill discharge to surge and become unduly coarse at the surges, even with constant feed; such surging is aggravated with fluctuating feed rate.

Catalogue data. The data in Table 12 are based on actual operation for one or more mills of different sizes grinding the particular materials through the ranges shown, and interpolations for the other sizes. The larger mills grind somewhat more efficiently than the smaller, but this is not nearly so apparent as with the short ball mill.

Performances are given in Table 12, and in Table 18, items 19, 31, 53, 54, 91, 123, 194, 195.

Table 12. Performances of grate-type ball-tube mills in dry grinding (*after Hardinge Co.*)

Size, diam. × length, ft.	Maximum ball load, lb.	Motor, hp.	Normal r.p.m.	Cement clinker from 97% <200-m. to 95% <325-m., bbl. per hr. *a*	Limestone from <12-m. to 95% <100-m., t.p.h. *b*	Calcined gypsum to 95% <100-m., t.p.h. *c*
4×10	8,500	50	28 to 30	9	2	2
4×18	15,300	100	28 to 30	17	5	4
5×22	36,000	200	25 to 27	37	10	9
6×24	70,000	350	22 to 24	65	17	16
7×26	102,000	500	20 to 22	95	25	23
8×30	180,000	900	18 to 20	170	45	42
9×30	223,000	1,200	16 to 18	235	65	60
10×30	278,000	1,500	15 to 17	280	80	74

a Closed-circuit with air classifier. Product size is equivalent to 1,750 to 1,800 sq. cm. per gm. specific surface. Clinker of average hardness. Barrel weight, 376 lb.

b Open-circuit; moisture less than 1/2%; average grindability.

c Feed temperature, 200° to 300° F. Object, to increase plasticity. Open-circuit operation.

Compartment mill

Compartment mill (Fig. 26) is a combination in one shell of a short-cylinder preliminary mill and a ball-tube mill. The mill has two, three, or four compartments, depending upon the size of feed and the product wanted. The entire shell may be a single cylinder or the feed end may be made of greater diameter than the balance (see description of ***Preliminator***, p. 16).

In the particular mill shown in Fig. 26 the cylindrical part of the shell *s* in the first compartment is 9 1/2-ft. diameter, the shell of the balance of the mill is 8-ft. diameter and compartment lengths are 10-ft The mill may be trunnion-supported, as shown, or have

tire-and-roller support. Diaphragms are of several forms. That shown in Fig. 26, and in more detail in Fig. 27, comprises a grate *a*, discharging into annular chamber *b* and thence out of the mill shell proper, through circumferential ports *c* into an annular chamber *i* between the mill shell and a peripheral screen *d*, attached to the mill, and rotating

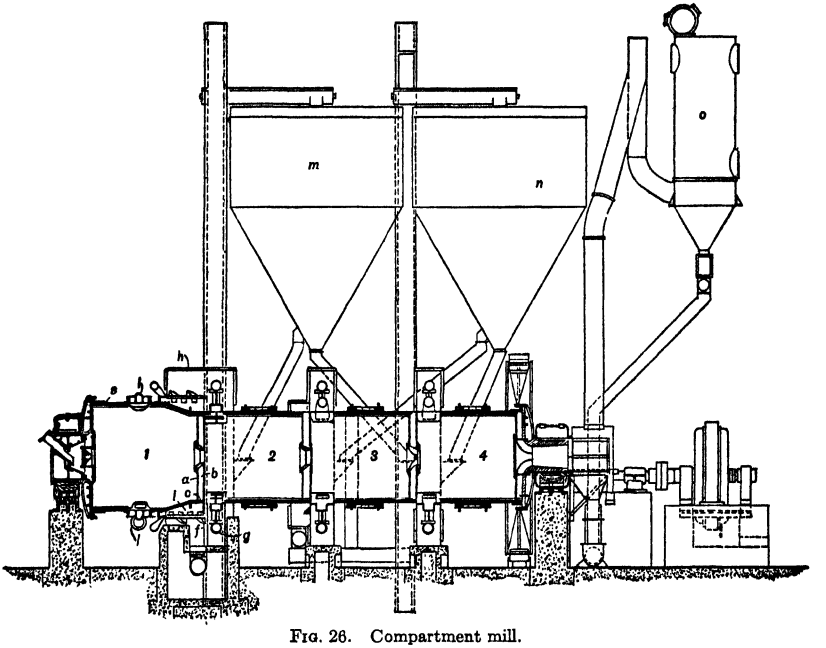

FIG. 26. Compartment mill.

with it. Screen oversize is moved by spirals *j* into the small sump *k* from which it is picked up by two spiral pipes *e*, spaced around the shell 180° apart, which return it into the first compartment at the manholes *l*. Undersize falls into a sump *f* and is picked up by scoops *g*, which elevate it to the second compartment. This entire diaphragm arrangement is enclosed in a dust-tight housing *h* which is connected to a dust collector; a negative pressure is maintained therein to prevent dusting. In Fig. 26 the first compartment is shown in closed circuit with the mill screen, as described; compartments 2 and 3 are in closed

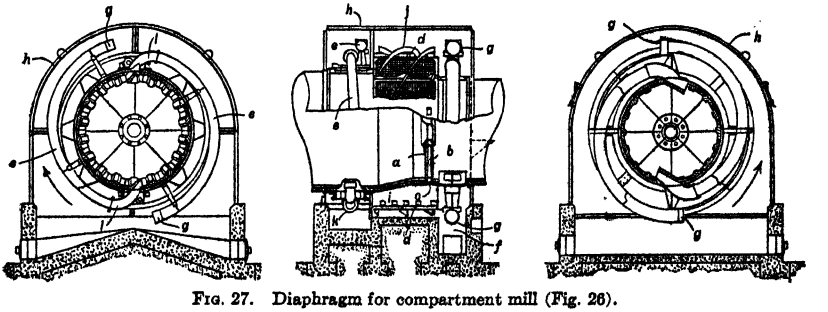

FIG. 27. Diaphragm for compartment mill (Fig. 26).

circuit with air classifiers *m* and *n*, apparently parallel-fed, which return undersize to the respective compartments, but which by-pass undersize of compartment 2 to compartment 4; compartment 4 is in open circuit; dust collector *o* guards its discharge.

Fig. 28 shows the grid-type division head. The grinding compartment is open into the squirrel cage *a*, made of tool-steel bars, which retains oversize. Undersize passes into annular chamber *b*, and is transferred by helix *d* into chamber *c*, wherein it is lifted above

the axis of the mill by flights *e* and is spilled onto fluted cone *f* and thence into the adjoining compartment. The DISADVANTAGE of this arrangement is the pounding to which the grid is subjected by the balls; this is accentuated by removal of the interstitial load by the grid.

Tricone compartment mill (Fig. 29) comprises a primary section designed to accomplish in one compartment the results of 2 or 3 cylindrical compartments, by taking advantage of the action of a conical shell in segregating balls as indicated in the sketch. The second compartment is a safety to compensate for loss of segregation in compartment 1, which occurs when the mill is overfed. The division head consists of the imperforate conical ring *a*, flat grate *b* with a central hole, a conical-plane imperforate reflection *g* of these, a divider plate *e* surrounding a two-way fluted cone *c*, and radial screens *f* spaced around the periphery. Material from the bottom of the load at the discharge end is led by lifter fins on *a* to grate *b*. Undersize of the grate falls onto *f*, undersize of which is deflected to the discharge-end side of plate *e* and thence, via *c*, into the second compartment; oversize is deflected onto the feed-end side of *e* and thence back into the mill at *d*. The second compartment may be air-swept (Figs. 33, 34). The mill may be made one-compartment and operated air-swept, or air-sweeping may be substituted for screening in the division head.

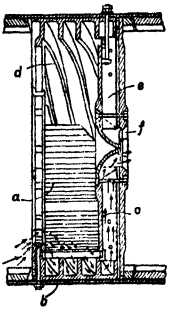

FIG. 28. Grid-type division head for compartment mill.

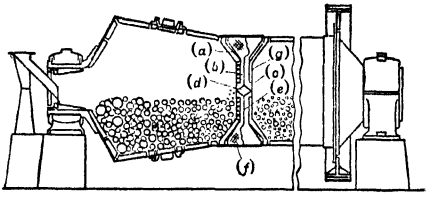

FIG. 29. Tricone compartment mill.

When sizing between compartments is not desired, a simple form of division head (*e.g.*, Fig. 30) is used. It comprises the slightly conical perforate discharge-end head *a*, a reversely coned imperforate feed-end head *b*, lifters *c* spaced around the shell in the interhead space, and a ribbed cone *d*, to lead material into the next compartment, as indicated. The discharge end of the mill is arranged similarly, with conical grate *e*, lifters *f*, and fluted cone *g*. The function of the division heads here is simply to supply gradient, and to enable ball rationing when the entire grind is done in one unit. Ball sizes in such a mill, with clinker of 1 1/2- or 2-in. limiting size, would be, say, 5~3-in. in compartment 1, <1 1/2-in. in compartment 2, and <3/4-in. in compartment 3.

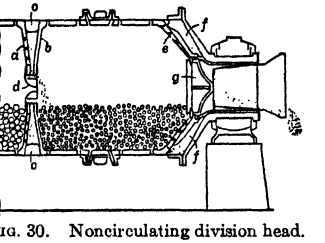

FIG. 30. Noncirculating division head.

Use. Until recently, compartment mills were run open-circuit. It has been found, however, that even in grinding cement clinker, in which service the mill has been most used, external classification improves efficiency, *i.e.*, a finer product is secured at a given capacity, or greater capacity is possible to a given fineness.

Broadly speaking, closed-circuit grinding increases capacity of a given compartment mill from 15 to 25%; more in certain cases in which a limiting size is specified without specification of other physical properties such as specific surface. The improvement is due, in part, to better grinding conditions in the mill; also to the fact that the classifier product, although containing less ultrafine sizes than the open-circuit product, could be substituted for it without detrimental effect on the physical or chemical characteristics. Mill temperature is lower in closed-circuit operation, and ball coating is decreased.

Originally the compartment mill had the advantage of combining the complete reduction operation in one unit. If, however, closed-circuit grinding is practiced, a two-mill combination is more flexible and can be run efficiently at lower operating cost and with less delay for repairs.

Speed of compartment mills ranges ordinarily from 72 to 78% of critical. With a two-diameter mill speed is a compromise.

Moisture should not exceed 1/2 to 1% by weight; higher moisture content reduces capacity appreciably. If initial moisture is higher than 1%, a separate drier should be used, or heated air passed through the mill. With dry feed, the heat generated in grinding may raise mill temperature to such an extent as to alter the character of product. In grinding cement clinker, water is frequently sprayed on the mill shell to keep temperature down. Closed-circuit grinding with air classifiers reduces temperature considerably.

Lubrication is difficult, owing to the excessive weight of large compartment mills and the relatively high temperatures at which they operate. Special bearings are offered by different manufacturers, *e.g.*, (*a*) internal pick-up buckets (Allis-Chalmers), or (*b*) disc-and-wiper (Hardinge), both of which raise oil from a sump and direct it over the trunnion bearings; (*c*) forced lubrication; (*d*) Smidth saddle bearing (*41 #5 RP 41; 144 #10 J 81*), shown in Fig. 31, which is a substitute for the ordinary roller supporting the tire, and comprises two slide shoes with ball and socket joints, placed unsymmetrically with respect to the resultant load, all enclosed in a dust-tight covering. Unit pressures vary along the length of the shoe. This permits the oil film supplied to the tire by dip lubrication and adhering thereto to enter the space between the tire and slide shoe. It is estimated that the oil film thus maintained is from 0.005 to 0.010 in. thick. A further advantage claimed is that inaccuracies in tire shape, diameter, and location are automatically compensated for by slight movement of the shoe, and that the bearing is self-adjusting to expansion and contraction due to heat.

Table 13. Catalogue data for compartment mills grinding cement clinker (*after Allis-Chalmers Mfg. Co.*)

Size, diam. × length, ft.	Weight of ball charge, lb.	Estimated capacity, bbl. per hr. *a*	Nominal motor hp. (mill only)
5×22	45,000	23	200
6×22	64,000	36	300
7×26	102,000	67	500
8 & 7×32	142,000	94	700
9 1/2 & 8×35	195,000	135	1,000

a <1-in. clinker of average hardness reduced to specific surface of 1,800 sq. cm. per gm., or approximately 96% <325-m., in closed-circuit with an air classifier.

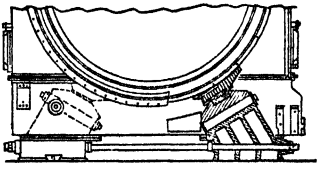

FIG. 31. Smidth saddle bearing.

Catalogue data for a few sizes of compartment mills grinding cement clinker in closed-circuit are given in Table 13. Capacities vary considerably with the hardness of the clinker and its size. The power figures do not include power for elevator, screw conveyor, and air classifiers, which amount to an additional 15 to 25%.

Performances are shown in Table 18, items 32, 33, 127, 164, 175. See also Sec. 3A, Art. 7.

Conical ball mill

General construction is the same as that of the wet-grinding mill (Sec. 5, Art. 9), modified for adaptation to dry-grinding conditions. Thus the heaping of load which occurs in the cylindrical section, taken with a short feed-end trunnion, permits gravity feed through a chute feeder (Fig. 32), except in unusual cases. Discharge is by various means. The simplest is as in wet grinding, *i.e.*, an open trunnion with a ball-retaining grate, used for free-flowing material. Usually the grate is placed part way down the cone, and a fluted discharge nose *a* lifts material into the discharge bell.

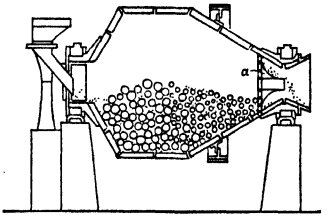

FIG. 32. Dry-grinding Conical ball mill.

If the mill is arranged for operation with an air classifier, short radial lifters are placed just outside the grate to shower grate undersize across the air stream leaving the mill (see item *V*, Fig. 33).

Thermomill. Fig. 33 shows a method of sweeping the Conical mill with hot gas, in connection with outside classification. Feed from bin *A* discharges via feeder *B* into an air-locked hopper *Z*, and passes thence through chute *Y* into mill *C*, the weight of the feed opening the air lock into the path of hot gas entering via flue *X* from heater *G*. Material passing grate *W* is picked up by lifters *V* and is dropped through the gas stream leaving the mill and entering pipe *U*, which delivers to classifier *D*. Material that is too coarse to be picked up by the air stream is picked up by one special lifter which discharges back into the grinding zone, through a central opening in the grate *W*. Classifier oversize returns to *Z* via pipe *T*; on its way out of the lower portion of classifier *D* it passes countercurrent to gas introduced through pipe *L*, which scavenges fines. Classifier fines pass through pipe *R* to collector *E*, and are discharged through an air lock into bin *J*. Fan *F* takes suction on *E* through *S* and blows clean gas back into the mill. A relatively high vacuum is maintained in the system so that hot gas flows readily into the feed end of the mill. Moisture-laden gas is bled off at a rate necessary to maintain the desired humidity in the mill by venting direct to atmosphere through stack *Q*, or through auxiliary fine-product collectors. It is common practice to operate this system on coal containing as much as 12 or 15% moisture, and on materials of higher specific gravity containing up to 8 or 10% moisture, varying air temperatures according to moisture content. Automatic temperature and capacity-control devices are employed. Entering air temperature may be 1,000° F. or more without raising exit temperature above 140° to 160°. Electric Ear sound control of feed rate (Sec. 5, Art. 18) is an important adjunct to such a system. Separations have been made over the range from <10-m. to 99.9% <325-m., but screens

are ordinarily better for coarse separations. A separate drier is preferable for very wet feeds where no adequate means are available to separate moisture-laden gas from the fines.

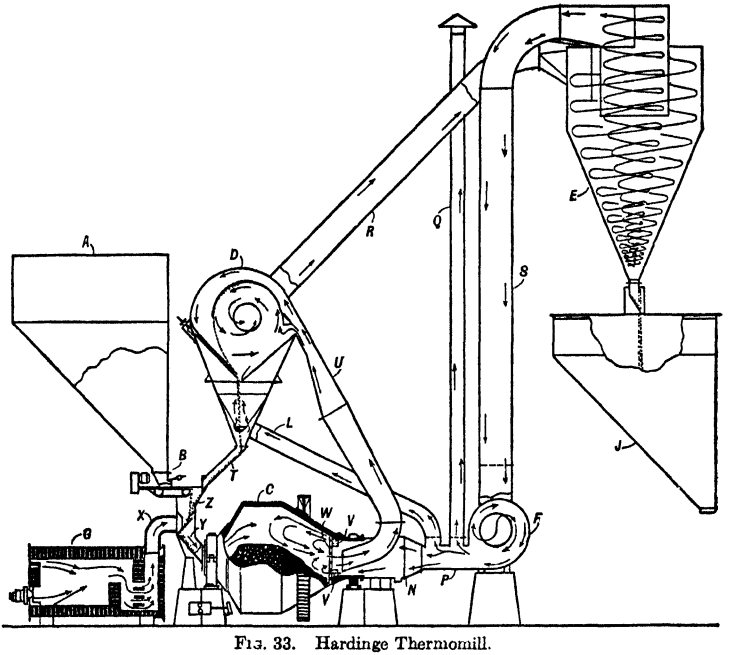

FIG. 33. Hardinge Thermomill.

Unit mill for preparing powdered fuel routes R (Fig. 33) to the burner, eliminates G, and blower F takes suction through S on kiln, cooler, or the like. Without recuperation, pipe P is cut off at N, eliminating pipe L and its function, and atmospheric air enters at N, in quantities controlled by a suitable damper, because of suction engendered by the classifier fan.

The unit ball-mill system requires somewhat more power and floor space than modern high-speed fixed-path pulverizers, but is superior for abrasive coals.

Another arrangement of a ball mill as a unit mill is shown in Fig. 34. The grinding unit *a* is a Tricone mill. Preheated gas enters through duct *b* and sweeps directly through the mill countercurrent to the flow, thence out through the large feed trunnion into a classifying chamber *c* (see Sec. 9, Art. 11) which drops coarse material back into spiral feeder *d*, while powdered coal passes up through suction pipe *e* of exhaustor *f* and thence to the burner. Feed enters at *g*. An insulated housing *h* surrounds the mill. Bearings are water-cooled. Suitable dampers regulate gas flow. The mill has large trunnion openings, so as to reduce the pressure differential required to flow gas through the system; this is particularly necessary where high temperatures are not available for drying, as when hot air is obtained from indirect heating chambers around furnace walls and the like. Wet feed mingles with dry oversize, so that surface moisture is largely evaporated by the time the feed enters the grinding zone. Damper *i* controls the capacity; when it is opened, the volume of gas passing through the mill is reduced, decreasing the amount of coal removed, but since outside air enters the fan through the damper, the velocity of the air in the burner pipe is maintained, which keeps coal in suspension.

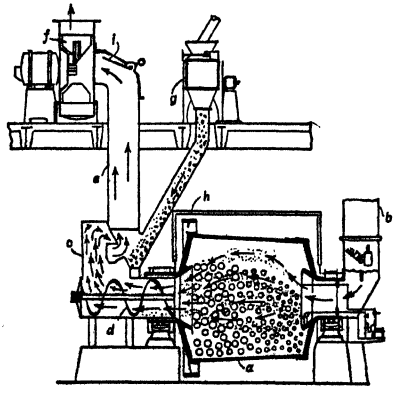

FIG. 34. Tricone unit mill.

Catalogue data for Conical ball mills grinding dry are given in Table 14. Actual capacities may vary considerably from those indicated, depending upon conditions of operation and hardness of material. **Performances** are given in Table 18.

Table 14. Catalogue data for Conical ball mill, dry grinding

Mill, diam. ft. × cylinder length, in.	Ball load, lb.	R.p.m.	Motor, hp.	Capacity, t.p.h.								
				Limestone *k*		Cement clinker *j*		Bituminous coal		Anthracite, from <3/16-in. to 85% <200-m. *g*	Chrome ore, from <3/4-in. to 97% <200-m. *h*	Ilmenitesand, from <40-m. to 98% <200-m. *i*
				From <3/4-in. to 99% <20-m. *a*	From <3/8-in. to 90% <200-m. *b*	From <1-in. to 99% <20-m. *c*	From <20-m. to 95% <325-m. *d*	From <1-in. to 70% <200-m. *e*	From <1-in. to 90% <200-m. *f*			
2×8	500	38	2	0.12	0.08	0.55	0.3	0.08	0.06	0.04	0.04	0.03
3×8	1,000	32	7.5	0.5	0.3	2.2	1.2	0.3	0.23	0.17	0.18	0.14
4½×16	3,800	30	20	1.6	1.0	7	3.1	1.0	0.7	0.5	0.67	0.44
5×22	6,700	28	40	3.3	2.0	1.5	7.3	2.0	1.4	1.0	1.1	0.9
6×22	11,100	26	60	5.7	3.5	2.8	13	3.4	2.5	1.8	1.9	1.5
7×22	17,000	24	100	9	5.2	43	18	5.0	3.5	2.7	2.8	2.2
8×36	32,000	21	150	15	9.7	80	35	9.0	6.4	5.0	5.2	4.1
9×48	50,000	19	300	30	19	150	68	18	12.5	10.0	10.5	8.0
10×66	65,000	18	400	43	26	215	94	25	17	13	14	11
12×60	105,000	17	700	70	43	360	150	40	30	22	23	19
12×120	170,000	16	1,200	120	80	650	270	70	52	40	40	38

a Closed-circuit with vibrating screen; product will contain 38 to 42% <200-m.
b Closed-circuit with Hardinge air classifier; fan power about 4 to 5 hp. per ton. Hot air used when moisture exceeds 2%.
c Closed-circuit with vibrating screen; product will contain 35 to 40% <200-m.
d Closed-circuit with Hardinge air classifier; fan power 2 to 2.5 hp. per bbl.
e Mill either as unit pulveriser for direct firing or sending air-classifier product to hot storage; air used if moisture exceeds 4%.
f Closed-circuit with Hardinge reversed-current air classifier; fan requires about 7 hp. per ton.
g Assumed as river coal with 10% to 25% sand; very hard grinding; 6 hp. per ton additional air-classifier fan power.
h Average (South Africa) chrome ore pre-dried; crushes readily but hard to grind; add 6 hp. per ton for air-classifier fan power.
i Concentrated ilmenite from beach sand (India); very hard. Closed-circuit with Hardinge air classifier requiring 9 hp. per ton additional.
j Bbl. per hr.
k Medium hardness.

Pebble mills

The principle of operation of a dry-grinding pebble mill is substantially the same as that of the ball mill. The only essential difference between ball and pebble mills is the grinding medium, and, usually, the lining. Within the useful range of operation, tons per hp-hr. from a pebble mill is, in many cases, equal to ball mill performance. The pebble mill

Table 15. Catalogue data for pebble-tube mill; dry grinding (*after Hardinge Co.*)

Size, diam. × length, ft.	Weights, lb.				R.p.m.	Motor, hp.	Capacity, t.p.h., on limestone *a*	
	Mill only	4-in. silex lining	1 1/2-in. metal lining	Pebble charge			10-m. to 90% <200-m.	20-m. to 85% <200-m.
4×10	16,000	8,200	9,300	6,100	29	25	0.7	1.2
4×16	17,700	12,300	14,000	10,000	29	40	1.0	1.8
5×16	32,000	15,700	17,500	15,800	26	50	1.4	2.5
5×22	38,000	20,800	23,500	21,800	26	75	2.3	4.0
6×20	43,000	19,000	21,000	28,500	24	100	3.0	5.3
7×20	49,000	23,500	26,500	38,600	22	150	5.0	9.0
8×22	63,000	30,000	34,000	55,800	20	200	6.5	12.0

a Open-circuit grinding; medium-hard limestone; less than 1/2% moisture.

cannot, however, handle as coarse feeds as the ball mill. A pebble-tube mill is practically limited to <8-m. feed, if the material is at all hard; better results are secured with even finer feeds. Conical pebble mills can take up to <1/2-in. feed. Pebble-mill circuits are like those described for ball mills. Grinding media are as for wet pebble mills (Sec. 5, Art. 6). Floor space required is greater than that for the equivalent ball mill, since capacity is roughly proportionate to weight of tumbling charge.

Table 16. Catalogue data for Hardinge Conical pebble mill; dry grinding

Size, mill diam. ft. × cylinder length, in.	Weights, lb.			R.p.m.	Motor, hp.	Capacities, t.p.h.				
	Mill	Silex lining	Pebbles			Limestone, 20-m. to 90% <200-m. *a*	Enamel frit, 1/4-in. to <60-m. *b*	Feldspar		Quartz 3/8-in. to 99.7% <325-m. *e*
								3/8-in. to <14-m. *c*	1/2-in. to 99% <200-m. *d*	
2×8	1,150	420	100	45	1	0.046	0.015	0.05	0.01	0.005
3×24	3,000	1,350	700	35	5	0.33	0.08	0.34	0.066	0.035
4 1/2×16	6,800	2,100	1,500	30	10	0.68	0.17	0.70	0.135	0.08
5×36	10,400	5,100	3,000	28	20	1.5	0.37	1.55	0.3	0.17
6×36	16,500	6,500	4,800	26	30	2.55	0.64	2.75	0.5	0.29
7×48	15,200	10,000	8,900	24	50	4.5	1.1	4.6	0.9	0.51
8×48	19,400	12,300	12,700	22	75	6.6	1.67	7.0	1.35	0.77
9×48	25,300	15,100	17,400	21	100	9.3	2.35	9.5	1.9	1.04
10×66	35,900	16,800	25,500	20	150	14.0	3.7	15.5	2.8	1.6
12×48	41,400	21,600	32,700	17	200	18.0	4.75	20.0	3.6	2.0

a Medium-hard limestone; closed-circuit with Hardinge air classifier consuming approximately 3 hp. per ton additional power.

b 60-m. trunnion trommel; small amount of oversize returned to feed end by hand.

c Closed-circuit with vibrating screen; 12 to 15% <200-m.

d Closed-circuit with Hardinge air classifier consuming approximately 15 hp. per ton.

e Used as filler or in special ceramic ware. Air classifier requires about 20 hp. per ton of product.

Use. Substantially the only use of the pebble mill today (1943) is when prevention of contamination is the prevailing consideration.

Catalogue data for pebble-tube mills and Conical pebble mills are given in Tables 15 and 16.

Performance data are given in Table 17. In Table 18, performances of Conical pebble mills are items 4, 11, 22, 25, 55, 95–97, 99, 100, 108, 111, 151, 162, 189, 191, 197, 198, 207, 211; cylindrical pebble mills, 95; pebble-tube mills, 52, 145, 186, 190, 208.

Table 17. Performances of dry-grinding pebble mills (*after Hardinge Co.*)

Material	Size and type of pebble mill	Feed, size	Product, size	Capacity, t.p.h.	Hp., mill and auxiliaries	Hp-hr. per ton, mill and auxiliaries	Classification	Pebble load, lb.
Silica sand.....	8×10-ft., cylindrical	20-m.	98% <200-m.	1.5	125	83	14-ft. Gayco	.....
Silica sand.....	8-ft.×84-in., Conical	20-m.	99% <200-m.	1.75	120	68	6-ft. Hardinge Superfine	18,000
North Carolina feldspar	8-ft.×48-in., Conical	3/4-in.	99% <200-m., 91% <325-m.	1.25	77	62	6-ft. Hardinge Superfine	10,500
Quartz.....	8-ft.×36-in., Conical	3/8-in.	99.5% <325-m.	0.6 *a*	70	116	6-ft. Hardinge Superfine	10,000
North Carolina feldspar	7 1/2×10-ft., cylindrical	1/2-in.	90% <325-m.	1.05	85	81	14-ft. Gayco	.....
Kryolith.....	8-ft.×60-in., Conical	3/16-in.	99% <200-m.	3	110	37	9-ft. Hardinge Superfine	12,500 *b*
Nepheline syenite	8-ft.×36-in., Conical	3/8-in.	3% >20-m., 14% <200-m.	4.5	50	11	Screens	10,000 *c*
Nepheline syenite	8-ft.×48-in., Conical	20-m.	95% <325-m.	1.1	85	77	4 1/2-ft. Hardinge Superfine	*d*
Talc *e*.....	6×22-ft. tube mill	10-m.	94.4% <100-m., 82.8% <200-m.	0.75	108	145	Open-circuit	16,000
Talc *f*.....	8-ft.×48-in., Conical	3/8-in.	99.6% <200-m.	0.63	84	133	14-ft. Gayco	14,000
Enamel frit.....	8-ft.×30-in., Conical	1/4-in.	All <60-m., 70% <200-m.	1.2	50	41	Open-circuit *g*	10,000 *b*
Enamel frit.....	4 1/2-ft.×16-in., Conical	1/4-in.	1.3% >60-m., 59% <200-m.	0.2	8	40	Open-circuit *h*	2,000
Clay *i*.....	8-ft.×36-in., Conical	3/8-in.	95% <200-m.	1.1	55	50	4 1/2-ft. Hardinge Superfine *j*	.....
Andalusite.....	6-ft.×22-in., Conical	10-m.	95% <100-m., 50% <200-m.	0.5	20	40	Open-circuit *k*	4,000
Limestone *l*.....	5 1/2×22-ft. tube mill	20-m.	95% <100-m., 85% <200-m.	5.0	85	17	Open-circuit	.....

a At 95% <200-m., 1.1 t.p.h.
b Porcelain balls.
c Nepheline.
d Adamant silica cubes, 5 lb. per ton consumed.
e 3% moisture.
f 2% moisture retards grinding.
g 60-m. trunnion trommel.
h 50-m. trunnion trommel.
i 12% moisture in feed.
j Hot air used in system; moisture vented.
k 40-m. trunnion trommel.
l Moisture <0.5%.

Cascade mill

Cascade mill (Hardinge Co.) is a tumbling mill with diameter 2 1/2 to 3 times its cylindrical length, fitted with obtuse conical ends, gear-driven in the usual fashion. It is designed to operate using the crude itself as the grinding medium. Its use depends upon the presence in the run-of-mine or quarry product of sufficient material, in lumps at least 5-in. and up to 10-in. size, tough enough not to crack up in tumbling and hard enough to grind the natural grains of the ore, to supply impact and interparticle nip (Sec. 5, Art. 2).

Table 18. Performances of dry-grinding mills *ch*

No.	Material	Mill	Sizing device	Feed		Product	Capacity	Hp. input		Hp-hr. per ton
				Size	Moisture, %			Mill	Sizing	
1	Aluminum dross *a*.....	4 1/2-ft. ×16-in. Conical ball mill	Double trommel on mill trunnion	<1-in.	1	*b*	2,000 lb. per hr.	18	.....	18
2	Aluminum dross *a*.....	5-ft. ×22-in. Conical ball mill	Vibrating screen	<1-in.	Dry	*c*	2,500 lb. per hr.	28	3	25
3	Aluminum, metallic....	3-ft. ×8-in. Conical ball mill	Air-swept	14-m. shot	Dry	All <200-m. *d*	10 lb. per hr.	5	1	1,200
4	Aluminum oxide *e*.....	4 1/2-ft. ×16-in. Conical pebble mill	No. 18 Hardinge Loop classifier	<3/8-in.	Dry	97.5% <325-m.	125 lb. per hr.	9	2	87
						100% <100-m., 55% <325-m.	250 lb. per hr.	9	2	44
5	Alundum *f*.....	6-ft. ×22-in. Conical ball mill	Vibrating screens	60~80-m.	Dry	All <80-m., 20% >100-m., 60% >150-m., 6% <200-m.	1,200 lb. per hr.	45	3	80
6	Amblygonite *q*.....	42-in. Fuller mill	8-ft. mechanical air separator	<1-in.	Dry	92% <325-m.	1,860 lb. per hr.	60	27	94
7	Anthracite *ar*.....	10-ft. ×66-in. Conical ball mill	9-ft. Superfine classifier	<16-m.	2.3	78% <200-m.	13.4 t.p.h.	380	95	35.5
8	Anthracite *as*.....	6-ft. ×36-in. Conical ball mill	Air classifier	<3/16-in.	1%	92% <200-m.	3.7 t.p.h.	67	30	25.4
9	Antimony.....	3-ft. ×8-in. Conical ball mill *g*	30-in. Gayco Separator	<1/4-in.	Dry	98% <325-m.	360 lb. per hr.	5	1 1/2	36
10	Anthophyllite asbestos *h, q*	Williams 4-roller mill	Air separator	<3/4-in.	Dry	80% <150-m. *i*	2,670 lb. per hr.	50	62	84
11	Asbestos.....	8-ft. ×30-in. Conical pebble mill *j*	10-m. shaking screens with air suction on top	<1/8-in.	Dry	<10-m.	1 1/2 to 3 t.p.h.	30	.....	20 to 10

		Conical ball mill	classifier							
13	Barite	Raymond mill	Whizzer separator	<3/4-in.	1	All <200-m., 99.5% <300-m.	2 1/4 t.p.h.	125		56
14	Bauxite	Raymond mill	Whizzer separator		8 *k*	90% <100-m.	6 t.p.h.	106		17.5
15	Bauxite	Raymond 5-roller mill	Low-side separator	<3/4-in.	5	99% <60-m.	5 t.p.h.	50	50	20
16	Bentonite (Neb.)	6-ft. ×36-in. Conical ball mill	6-ft. Superfine classifier	<3/8-in.	9 *l*	90% <200-m.	3 t.p.h.	70	36	35
						95% <200-m.	2 1/4 t.p.h.	70	36	47
17	Bentonite (Wyo.)	No. 5047 Raymond high-side mill	5-ft. Whizzer	<1/2-in.	5.8 *k*	93.5% <200-m.	5.6 t.p.h.	75	50	22
18	Beryl	3-ft. ×24-in. Conical ball mill	18-in. Superfine classifier	<1/2-in.	Dry	98% <200-m.	160 lb. per hr.	10	1	136
19	Bone black	6×22-ft. tube mill	Raymond centrifugal separator plus bag collector	<1/8-in.	Dry	All <325-m. *m*	300 lb. per hr.	75	65	933
20	Bronze foil	Stamps *n*	Screens or air classification	1/4 ~ 3/8-in., thin flakes	Dry	<120-m.		0.54 hp.-hr. per lb. of product		
					Dry	<400-m.		1.12 hp-hr. per lb. of product		
21	Carbon, activated	6×8-ft. cylindrical batch mill	None	<20-m.	Dry	99% <325-m.	1,000 lb. batch in 4 hr.	25	.....	200
						98% <200-m., 85% <325-m.	1,000 lb. batch in 2 hr.	25	.....	100
22	Carbon, activated	6-ft. ×30-in. Conical pebble mill	Federal pneumatic classifier	2 1/2 ~ 6-m.	Dry	99.7% <325-m.	200 lb. per hr.	15	3	180
23	Carbon, vegetable *o*	5-ft. ×22-in. Conical ball mill	8-ft. (diam.) mechanical air separator	<8-m.	Dry	96% <100-m., 25% <200-m.	800 lb. per hr.	30	5	87.5
24	Carborundum	6-ft. ×22-in. Conical ball mill	Open-circuit	<1/4-in.	Dry	All <8-m., 9.4% <150-m.	1,800 lb. per hr.	50	.....	55

Notes on p. 44.

Table 18. Performances of dry-grinding mills *ch*—*Continued*

No.	Material	Mill	Sizing device	Feed		Product	Capacity	Hp. input		Hp-hr. per ton
				Size	Moisture, %			Mill	Sizing	
25	Carborundum.....	6-ft. ×22-in. Conical pebble mill	Open-circuit	<10-m.	Dry	2% >20-m., 33% <100-m.	600 lb. per hr.	20	.....	67
26	Caustic soda *p*.....	6-ft. ×22-in. Conical ball mill	Open-circuit	<3/4-in.	Dry	All <12-m.	4,000 lb. per hr.	35	.....	17.5
27	Celestite *q*.....	Williams roller mill	Pneumatic classifier	<1 1/2-in.	Dry	98% <200-m.	5,000 lb. per hr.	50	50	40
28	Celestite *q*, *r*.....	42-in. Fuller mill	8-ft. mechanical air separator	<1-in.	Dry	92% <325-m.	4,500 lb. per hr.	60	27	39
29	Cement clinker *t*.....	No. 238 B.&W. mill	Mechanical air separator	<1-in.	Dry	1,850 SA *s*	22 bbl. per hr.	300	total	13.6 per bbl.
30	Cement clinker *u*.....	No. 360 B.&W. mill	Mechanical air separator	<1-in.	Dry	1,900 SA *s*	60 bbl. per hr.	445	100	9.1 per bbl.
31	Cement clinker *v*.....	7×26-ft. ball-tube mill	16-ft. mechanical air separator	53% <20-m.	Dry	98% <200-m.	81.9 bbl. per hr.	500	100 est.	7.4 per bbl.
						1,800 SA *s*	75.3 bbl. per hr.	500	100 est.	7.9 per bbl.
32	Cement clinker *w*.....	7×26-ft. compartment mill	Open-circuit	<2-in.	Dry	89% <200-m.	71 bbl. per hr.	550	.....	7.8 per bbl.
33	Cement clinker *x*.....	7×26-ft. compartment mill	16-ft. Sturtevant air classifier	<2-in.	Dry	94% <200-m. 1,650 SA *s*	70 bbl. per hr.	550	85	9.0 per bbl.
34	Cement clinker.....	Griffin mill *y*	Internal screens	<3/4-in.	.....	95% <20-m. 45% <200-m.	12 bbl. per hr.	33	.....	2.75 per bbl.
35	Cement clinker.....	10-ft. ×48-in. Conical ball mill *z*	Screen	<1-in.	.....	10% >20-m., 47% <200-m.	130 bbl. per hr.	286	.....	2.2 per bbl.
36	Cement clinker *aa*.....	10-ft. ×66-in. Conical ball mill *ab*	12-ft. Superfine classifier	<1/4-in.	Dry	93% <200-m.	73 bbl. per hr.	394	74	6.4 per bbl.

37	Cement clinker *ac*.....	Hercules mill	Internal screen, 8-m.	<2-in.	Dry	43% <200-m.	200 bbl. per hr.	350	.....	1.7 per bbl.
			2-m. screen			53% <200-m.	170 bbl. per hr.	350	.....	2.1 per bbl.
38	Cement clinker.....	Kent Maxecon mill *ad*	Vibrating screen	<1-in.		All <20-m., 30% <200-m.	25 bbl. per hr.	30	5	1.4 per bbl.
39	Cement clinker.....	No. 8 Krupp ball mill	Screen around mill	<1 1/2-in.	Dry	5.5% >8-m., 14% <200-m.	12.5 bbl. per hr.	50	.....	4 per bbl.
40	Cement clinker.....	No. 8 Krupp ball mill	12-m. screen on mill	35% >4-m.	Dry	2.6% >20-m., 22% <200-m.	25 bbl. per hr.	60	.....	2.4 per bbl.
41	Cement clinker.....	10×6-ft. Smidth Kominuter	12-m. screens on mill	<2-in.	Dry	95% <20-m.	120 bbl. per hr.	300	.....	2.5 per bbl.
42	Cement clinker.....	No. 66 Smidth Kominuter	6-m. screens on mill	<1-in.	.....	85% <26-m.	55 bbl. per hr.	85	.....	1.55 per bbl.
43	Cement rock (raw mix) *ae*	B.&W. Mill	16-ft. Sturtevant separator	.....	0.2	90% <200-m.	33.2 t.p.h.	600	90	21
44	Cement rock (raw mix) *af*	No. 366 B.&W. mill	2@16-ft. mechanical air separators *ag*	.....	.....	90% <200-m.	40 t.p.h.	600	200	20
45	Cement rock (raw mix)	7-ft.×36-in. Conical ball mill	Hum-mer screen	<1 1/2-in.	Dry	All <20-m., 43.6% <200-m.	15 t.p.h.	104	7	7.4
46	Cement rock (raw mix)	10-ft.×66-in. Conical ball mill *ah*	12-ft. Superfine classifier	<1/2-in.	2	99% <100-m., 90.5% <200-m.	23 t.p.h.	320	125	19.3
47	Cement rock (raw mix) *al*	10-ft.×66-in. Conical ball mill	10 1/2-ft. Superfine classifier	<6-m.	Dry	91% <200-m.	22 to 27 t.p.h.	380	92	21.5 to 17.6
48	Cement rock (raw mix) *aj*	Hercules mill	Internal screen, 9-m.	<1-in.	.....	98% <20-m., 54% <200-m.	40 t.p.h.	300	.....	7.5
49	Cement rock (raw mix)	Hercules mill *ak*	Internal screen, 6-m.	<1/4-in.	.....	95% <20-m., 50% <100-m.	33 t.p.h.	260	.....	7.9
50	Cement rock (raw mix) *al*	Hercules mill	Internal screen, 14-m.	<1-in.	.....	100% <14-m.	40 t.p.h.	300	.....	7.5

Table 18. Performances of dry-grinding mills *ch*—*Continued*

No.	Material	Mill	Sizing device	Feed		Product	Capacity	Hp. input		Hp-hr. per ton
				Size	Moisture, %			Mill	Sizing	
51	Cement rock (raw mix)	No. 8 Krupp ball mill	8-m. screen	<2-in.	.....	All <8-m., 26.6% <200-m.	6 t.p.h.	60	.....	10
52	Cement rock (raw mix)	5×22-ft. pebble-tube mill	Open-circuit	<10-m.	Dry	95% <100-m.	4 1/2 t.p.h.	75	.....	16.7
53	Cement rock (raw mix) *am*	7×26-ft. Traylor ball-tube mill	Open-circuit	<20-m.	Dry	90% <200-m.	50 t.p.h. *an*	500	.....	18
54	Cement rock (raw mix)	7×23-ft. Smidth ball-tube mill	Open-circuit	<20-m.	Dry	90% <200-m.		400	.....	18
55	Charcoal.....	6-ft.×30-in. Conical pebble mill	Pneumatic separator	<3-m.	Dry	99.7% <325-m.	200 lb. per hr.	15	3	180
56	Charcoal.....	Batch mill	Batch operation	<1/2-in.	Dry	95% <200-m.	1,320-lb. batch in 3 hr.	10	.....	45
57	Charcoal.....	2-ft.×8-in. Conical ball mill	No. 12 Hardinge Loop classifier	<3/16-in.	Dry	98.9% <200-m.	75 lb. per hr.	2	1	80
58	Charcoal.....	4 1/2-ft.×16-in. Conical pebble mill	Open-circuit	<1/4-in.	Dry	90% <80-m.	210 lb. per hr.	15	.....	143
59	Charcoal, hardwood *ap.*	4 1/2-ft.×16-in. Conical ball mill	Air classifier	<1/4-in.	Dry	85% <325-m.	500 lb. per hr.	15	3	72
						99% <325-m.	300 lb. per hr.	15	3	120
60	Chrome ore.....	8-ft.×60-in. Conical ball mill	6-ft. Superfine classifier	<1 1/2-in.	Dry	99% <100-m.	7 1/2 t.p.h.	200	40	32
61	Chrome ore.....	7-ft.×48-in. Conical ball mill	6-ft. Superfine classifier	<3/4-in.	1	All <100-m., 97.6% <200-m.	4 t.p.h.	135	25	40
62	Chromite.....	Type B, B.&W. mill	14-ft. Sturtevant separator	<1 1/4-in.	2	99 1/2% <100-m.	5 1/2 t.p.h.	125	70	35.5
63	Chromite.....	42-in. screen-type Fuller mill	Internal screens	<1/2-in.	Dry	99% <100-m.	4 t.p.h.	190	.....	47

64	Chromite *q*	42-in. Fuller mill	Internal screens	<1-in.	Dry	<8-m.	4,800 lb. per hr.	60	27	36
			8-ft. mechanical air separator	<1-in.	Dry	90% <325-m.	2,000 lb. per hr.	60	27	87
65	Clay	6-ft. ×22-in. Conical ball mill	Hardinge Rotary air classifier	<2 1/2-in.	3	90% <80-m.	7,400 lb. per hr.	50	20	19
66	Clay	Raymond 5-roll mill	Raymond classifier	<3/4-in.	Dry	95% <300-m.	2 t.p.h.	100		50
67	Clay	3-ft. ×36-in. Conical ball mill	Hardinge Loop classifier	<3/8-in.	Dry	99.7% <20-m., 70.5% <100-m.	540 lb. per hr.	10	3.5	50
68	Clay	4 1/2-ft. ×16-in. Conical ball mill	Hum-mer screen	<2-in.	Dry	100% <20-m.	1,000 lb. per hr.	18	3	42
69	Clay, ball	No. 53 Imp. hammer mill	Whizzer separator	.....	27 *aq*	95% <100-m., 77% <200-m.	6,700 lb. per hr.	50	35	25.3
70	Clay, china	No. 5057 Raymond high-side mill	5 1/2-ft. Double Whizzer	.....	Dry	99.66% <200-m.	8 t.p.h.	60	60	15.3
71	Clay, kaolin	No. 5057 Raymond high-side mill	5 1/2-ft. Double Whizzer	.....	Dry	All <200-m. 99.8% <325-m.	2.5 t.p.h.	50	65	26
73	Coal, bituminous	10-ft. ×76-in. Conical ball mill	Hardinge reverse-current classifier	<1-in.	5	75% <200-m.	28 t.p.h.	440	115	19.8
74	Coal, bituminous	Raymond 5-roll mill	Whizzer separator	<3/4-in.	Dry	99.5% <325-m.	2.5 t.p.h.	50	50	40
75	Coal, bituminous	No. 453 Raymond bowl-type unit mill	Built-in air separator	.....	*at*	90% <200-m.	4 t.p.h.	125	.....	31.3
76	Coal, bituminous	Raymond 5-roll mill	Built-in air separator	<1-in.	1	80% <200-m.	4 t.p.h.	115	.....	29
77	Coal, bituminous	Raymond 5-roll mill	Built-in air separator	<1-in.	0.8	94% <200-m.	7 t.p.h.	100		14.3
					1.0		6.8 t.p.h.	108		15.9
					1.2		6 t.p.h.	110		18.3
					4.0		5.25 t.p.h.	112		21.4

Table 18. Performances of dry-grinding mills *ch*—*Continued*

No.	Material	Mill	Sizing device	Feed		Product	Capacity	Hp. input		Hp-hr. per ton
				Size	Moisture, %			Mill	Sizing	
78	Coal, bituminous *au*...	5×6-ft. Kennedy air-swept ball mill	Air draft through mill	.....	.....	88% <200-m.	2 1/2 t.p.h.	50	15	26
79	Coal, bituminous.....	B.&W. unit pulverizer	Internal classifier	.....	5	80% <200-m.	5 t.p.h.	75	60	27
80	Coal, bituminous.....	No. 144 B.&W. unit pulverizer	.....	<3/4-in.	10	94% <100-m.	3 1/2 t.p.h.	53	65	34
81	Coal, bituminous (Nova Scotia)	7-ft. ×60-in. Hardinge unit ball mill	Hardinge air classifier	<3/4-in.	3	89% <200-m.	7 t.p.h.	125	60	26.5
82	Coal, bituminous (Pitts.) *av*	No. 573 Raymond bowl mill *aw*	Internal air separator	.....	7.2	98% <50-m., 71.7% <200-m.	14 t.p.h.	260		18.5
83	Coal, bituminous (W. Va.)	2-ft. ×8-in. Conical ball mill	18-in. Superfine classifier	<3/4-in.	Dry	87.5% <200-m.	250 lb. per hr.	2	1	24
84	Coal, bituminous (W. Va.) *ax*	40A Whiting hammer mill *ay*	Internal classifier	<3/4-in.	.....	82% <200-m.	4,500 lb. per hr.	65	.....	29
85	Coke.....	5×12-ft. rod mill	Open-circuit	<1-in.	Dry	5% >8-m., 15% <200-m.	8 t.p.h.	125	.....	15.6
86	Coke.....	5×10-ft. rod mill *az*	Open-circuit	<1 1/2-in., 50% <1/4-in.	15	<1/4-in., 30% <20-m.	10 t.p.h.	100	.....	10
87	Coke, petroleum.....	8-ft. ×72-in. Conical ball mill	72-in. Superfine classifier	<1/4-in.	Dry	5.4% >48-m., 48% <200-m.	7.9 t.p.h.	250	37	36.6
88	Coke, petroleum	5×12-ft. rod mill	Vibrating screen	<3/4-in.	Dry	5% >8-m., 9% <200-m.	8.8 t.p.h.	69	.....	7.0
				<1/4-in.	Dry	1.5% >8-m., 8% <200-m.	9.5 t.p.h.	69	.....	7.3

89	Copper, metallic alloy	4 1/2-ft. × 24-in. Conical ball mill	Superfine classifier	<3/8-in.	Dry	92% <200-m.	400 lb. per hr.	25	3	140
90	Copper-oxide electrodes *ba*	4 1/2-ft. × 16-in. Conical ball mill	Vibrating screen	<1-in.	Dry	80% <200-m.	1 t.p.h.	20	2	22
91	Copper oxide, mill scale *bb*	4 × 8-ft. cylindrical tube mill	Air swept; No. 36 Superfine	<1/4-in.	Dry	95% <200-m.	960 lb. per hr.	20	5	52
92	Copper oxide, mill scale	3-ft. × 8-in. Conical ball mill	30-in. Gayco separator	1/2-in. sq. × 1/16-in. thick	Dry	98% <325-m.	275 lb. per hr.	6	1.5	54.4
93	Corundum	20 × 14-in. crushing rolls *bc*	Vibrating screen	<1 1/2-in.	Dry	All <8-m.	3,500 lb. per hr.	40	3	24.6
				<1 1/2-in.	Dry	All <70-m.	2,200 lb. per hr.	40	3	39.0
94	Emery	5-ft. × 22-in. Conical ball mill	6-ft. (diam.) mechanical air separator	<1/2-in., >1/4-in.	Dry	All <90-m., 65% <325-m.	850 lb. per hr.	30	10	94
95	Feldspar (Tenn.) *bd*	7 1/2 × 10-ft. cylindrical pebble mill	14-ft. Gayco separator	<3/4-in.	Dry	90% <325-m.	2,100 lb. per hr.	80	25	100
		8 ft. × 36-in. Conical pebble mill	14-ft. Gayco separator	<3/4-in.	Dry	99 1/2% <200-m., 92% <325-m.	2,200 lb. per hr.	50	25	68
		8-ft. × 48-in. Conical pebble mill	Vibrating screen	<3/4-in.	Dry	99% <20-m., 50% <200-m.	6,000 lb. per hr.	60	5	22
96	Feldspar	8-ft. × 36-in. Conical pebble mill	4 1/2-ft. Superfine classifier	<3/4-in.	2	98 1/2% <200-m.	3,000 lb. per hr.	65	15	47
97	Feldspar, Canadian	8-ft. × 36-in. Conical pebble mill	10-ft. Gayco separator	<1/2-in.	Dry	All <200-m.	1,700 lb. per hr.	50	20	82
						98% <200-m.	2,000 lb. per hr.	50	20	70
						95% <200-m.	2,400 lb. per hr.	50	20	58
						85% <200-m.	3,200 lb. per hr.	50	20	44
98	Feldspar	6 × 8-ft. batch pebble mill *be*	.....	<16-m.	Dry to 1 1/2	All <200-m., 94.6% <325-m.	*be*	30	.....	140 to 300
99	Feldspar	7-ft. × 36-in. Conical pebble mill	Vibrating screen	1/4-in. ~ 16-m.	1 1/2	99% <28-m.	5,000 lb. per hr.	40	5	18

Table 18. Performances of dry-grinding mills *ch—Continued*

No.	Material	Mill	Sizing device	Feed		Product	Capacity	Hp. input		Hp-hr. per ton
				Size	Moisture, %			Mill	Sizing	
100	Feldspar	8-ft. ×60-in. Conical pebble mill	6-ft. Superfine classifier	<2-in.	1	99% <200-m.	3,500 lb. per hr.	68	21	50
						85% <200-m.	6,000 lb. per hr.	68	21	29
101	Ferrochrome	7-ft. ×48-in. Conical ball mill	Air-swept	<3/4-in.	Dry	97% <48-m., 53% <200-m.	7 t.p.h.	150	25	25
102	Ferrochrome	3×8-ft. rod mill	Vibrating screen	<3/4-in.	Dry	<20-m.	2,840 lb. per hr.	22	.....	15.5
						<40-m.	2,165 lb. per hr.	22	.....	20.4
103	Ferrosilicon	7-ft. ×48-in. Conical ball mill	Air-swept	<3/4-in.	Dry	90% <200-m.	7,000 lb. per hr.	150	11	46
104	Ferrosilicon, 60% Si	6-ft. ×36-in. Conical ball mill	Hardinge Loop classifier	<3/4-in.	Dry	90.5% <20-m., 30% <200-m.	7,200 lb. per hr.	75	15	25
105	Ferrosilicon, 75% Si	6-ft. ×36-in. Conical ball mill	Open-circuit	<1 1/2-in.	Dry	96.5% <65-m., 80% <200-m.	2,250 lb. per hr.	75	.....	66.6
106	Fluorspar	8-ft. ×22-in. Conical ball mill	Hum-mer screen	2~1/2-in.	.....	All <16-m., 60% <100-m.	7 t.p.h.	100	5	15
107	Fluorspar	6-ft. ×22-in. Conical ball mill	4 1/2-ft. Superfine classifier	<1/4-in.	1	90% <325-m.	1 t.p.h.	50	10	60
108	Frit (enamel)	4 1/2-ft. ×16-in. Conical pebble mill	Trunnion trommel	<1/8-in.	Dry	97% <100-m.	250 lb. per hr.	8.5	.....	68
109	Frit (enamel)	4×4-ft. batch mill *bf*	.....	<1/4-in.	Dry	All <40-m., 60% <200-m.	400 lb. per batch	7	.....	93 *bg*
110	Frit (enamel)	4×5-ft. batch mill *bh*	.....	<1/4-in.	Dry	99% <60-m.	500 lb. per batch	10	.....	120
111	Frit	8-ft. ×30-in. Conical pebble mill	60-m. trunnion trommel	<1/4-in.	Dry	All <60-m., 70% <200-m.	2,500 lb. per hr.	50	.....	40

112	Fullers' earth.....	Raymond high-side mill	Internal air separator	<1/4-in.	.....	99.8% <200-m., 99.2% <300-m.	1,600 lb. per hr.	35		46
113	Ganister *bi*.....	6-ft. ×48-in. Conical ball mill	Open-circuit	8~20-m.	.....	90% <65-m.	4.5 t.p.h.	80	.....	17.9
114		6×8-ft. cylindrical ball mill	Open-circuit	8~20-m.	.....	90% <65-m.	4 t.p.h.	145	.....	36
115	Ganister.....	4×8-ft. cylindrical ball mill, peripheral discharge *bj*	Mechanical air separator	<20-m.	Dry	95% <65-m.	3,750 lb. per hr.	50	15	37
116	Garnet.....	4 1/2-ft. ×16-in. Conical ball mill	30-in. (diam.) mechanical air separator	<1/4-in.	Dry	90% <200-m.	450 lb. per hr.	18	2	88.8
117	Graphite, amorphous...	4 1/2-ft. Conical ball mill	8-ft. Gayco classifier	<1/4-in.	Dry	97% <200-m.	618 lb. per hr.	18	10	91
						99.5% <200-m.	450 lb. per hr.	18	10	120
118	Graphite, amorphous...	Williams roller mill *bk*	Air separator and heater	<3/4-in.	10	90% <200-m.	5,000 lb. per hr.	40	20	24
						99% <325-m.	1,800 lb. per hr.	40	20	67
119	Grog.....	5-ft. ×22-in. Conical ball mill	Vibrating screen	1 1/2-in.~4-m.	Dry	100% <4-m., 17% <150-m.	5 t.p.h.	40	5	9
120	Grog.....	3-ft. ×24-in. Conical ball mill	18-in. Hardinge classifier	<1/4-in.	Dry	80% <100-m.	440 lb. per hr.	8	2	23
121	Gypsum.....	No. 5048 Raymond low-side mill	Internal air separator	<1-in.	Dry	84% <100-m.	10.4 t.p.h.	75	50	12
122	Gypsum.....	Raymond low-side mill	Internal air separator	<1/2-in.	Dry	90% <100-m. 60% <200-m.	9.5 t.p.h.	50	47	10.2
123	Gypsum *bl*.....	7×24-ft. ball-tube mill	Open-circuit	40% <100-m.	Dry, hot	80% <100-m.	30 t.p.h.	425	.....	14.2
124	Gypsum (anhydrite)...	10-ft. ×36-in. Conical ball mill *bm*	9-ft. Superfine classifier	<1 1/2-in.	3 free	98% <200-m.	14.5 t.p.h.	230	85	21.6
125	Hematite *q*.....	33-in. Fuller mill	6-ft. mechanical air separator	<1-in.	Dry	99% <200-m.	1,330 lb. per hr.	40	17	92

Table 18. Performances of dry-grinding mills *ch—Continued*

No.	Material	Mill	Sizing device	Feed		Product	Capacity	Hp. input		Hp-hr. per ton
				Size	Moisture, %			Mill	Sizing	
126	Hematite *q*.....	Williams 4-roll mill	Pneumatic classifier	<3/4-in.	Dry	99% <200-m.	1,850 lb. per hr.	50	62	120
127	Ilmenite.....	6 2/3 ×15-ft. compartment ball-tube mill	16-ft. (diam.) Sturtevant separator	<40-m.	Dry	98% <200-m.	5 1/2 t.p.h.	250	65	58
128	Ilmenite *q*.....	42-in. Fuller mill	8-ft. mechanical air separator	<20-m.	Dry	90% <325-m.	1,850 lb. per hr.	60	27	95
129	Ilmenite concentrate	3-ft. ×8-in. Conical ball mill	30-in. Raymond mechanical air separator	<1/16-in.	1	90% <200-m.	200 lb. per hr.	6	1	70
130	Ilmenite concentrate...	6×15-ft. cylindrical ball mill	16-ft. Sturtevant mechanical air separator	<40-m.	1/2	98% <200-m.	5 t.p.h.	250	75	65
131	Ilmenite concentrate...	10-ft. ×48-in. Conical ball mill	10 1/2-ft. Superfine classifier	<40-m.	Dry	98% <200-m.	8.5 t.p.h.	340	100	51.7
132	Iron, cast borings.....	7-ft. ×36-in. Conical ball mill	Vibrating screen	<4-m., 50% <8-m.	Dry	<20-m.	6 t.p.h.	135	5	23.3
133	Iron, cast borings.....	4 1/2-ft. ×16-in. Conical ball mill *bn*	Open-circuit	Borings and chips	Dry	<12-m.	1.0 t.p.h.	30	.....	30
134	Iron, cast borings.....	7-ft. ×36-in. Conical ball mill *bo*	Vibrating screen, 35-m.	<1/2-in.	Dry	<35-m.	2.5 t.p.h.	135	5	56
135	Iron, cast crystallized..	5×5-ft. cylindrical ball mill *bn*	Vibrating screen	Pellets 1/2-in. diam. × 1 1/2-in. long	Dry	<40-m.	1,250 lb. per hr.	40	2	67.2
136	Iron, chilled cast shot *bp*	7-ft. ×48-in. Conical ball mill	Vibrating screen	1/2-in.~ 8-m.	Dry	All <9-m., 2% <45-m.	3,600 lb per hr.	165	5	94.5
137	Lamp black, calcined..	6-ft. ×16-in. Conical ball mill	Vibrating screen, 65-m.	<3/4-in.	Dry	<65-m., 60% <200-m.	2 t.p.h.	25	2	13.5

138	Lime, burned	7-ft. ×36-in. Conical ball mill	Hardinge classifier	<3/4-in.	Dry	90% <100-m.	12.5 t.p.h.	100	35	10.8
139	Limestone, agricultural	Bradley 3-roll mill	Internal screen	<1 1/4-in.	Dry	95% <20-m., 65% <100-m.	7 t.p.h.	100	.....	14.3
140	Limestone, agricultural	8-ft. ×48-in. Conical ball mill	Vibrating screen	3/8-in. ~ 16-m.	1	98% <20-m., 48% <100-m.	23 t.p.h.	200	15	9.3
141	Limestone.....	7-ft. ×48-in. Conical ball mill	6-ft. Superfine classifier	<3/4-in.	Dry	80% <100-m., 60% <200-m.	10.25 t.p.h.	122	40	15.8
						90% <200-m.	5 t.p.h.	122	40	33
						99.7% <270-m.	1.25 t.p.h.	122	40	130
142	Limestone.....	7-ft. ×36-in. Conical ball mill	Vibrating screens	<5/8-in.	Dry	All <28-m., 60% <100-m.	12 t.p.h.	110	5	9.7
143	Limestone.....	Kent mill	Screens	<1-in.	Dry	<10-m.	10 t.p.h.	50	3	5.3
144	Limestone.....	Kent mill	Mechanical air separator	<1-in.	Dry	80% <200-m.	3 t.p.h.	50	15	21.6
145	Limestone.....	5×22-ft. pebble-tube mill	12-ft. mechanical air separator	<6-m.	Dry	99.7% <325-m.	1.5 t.p.h.	100		67.0
146	Limestone.....	Raymond 5-roll mill	Internal air separator	<1/4-in.	Dry	99% <300-m.	2.5 t.p.h.	100		40
147	Limestone.....	Raymond 5-roll mill	Internal air separator	<1/4-in.	3	99% <200-m.	1.5 t.p.h.	100		67
148	Limestone.....	Raymond 5-roll mill *bq*	5-ft. Whizzer separator	<3/4-in.	Dry	All <30-m, 60% <200-m.	11.75 t.p.h.	138		11.8
						All <50-m., 70.6% <200-m.	7.25 t.p.h.	128		17.7
						All <100-m., 80% <200-m.	6 t.p.h.	126		21.0
						92% <200-m.	4.75 t.p.h.	122		25.7

Table 18. Performances of dry-grinding mills *ch*—*Continued*

No.	Material	Mill	Sizing device	Feed		Product	Capacity	Hp. input		Hp-hr. per ton
				Size	Moisture, %			Mill	Sizing	
149	Limestone	No. 0 Sturtevant swing-sledge hammer mill *br*	1/4-in. grate opening	<3-in.	Dry	99% <10-m., 6% <100-m.	5 t.p.h.	12	.....	2.4
			1/8-in. grate opening	<3-in.	Dry	85% <10-m., 40% <100-m.	3 t.p.h.	12	.....	4.0
150	Limestone	40-in. Griffin mill	Internal screens	<3/4-in.	Dry	95% <100-m.	3.5 t.p.h.	75	.....	21.4
151	Litharge	6-ft. ×22-in. Conical pebble mill	Superfine classifier	<1/8-in.	Dry	99.5% <325-m.	400 lb. per hr.	18	12	150
152	Magnesite	6-ft. ×48-in. Conical ball mill	Hardinge classifier	<40-m.	1	99.9% <150-m.	2.2 t.p.h.	90	15	47
153	Magnesite (Calif.)	8-ft. ×48-in. Conical ball mill	6-ft. Superfine classifier	<3/4-in.	0.2	95.5% <100-m., 80% <200-m.	3.4 t.p.h.	180	40	65
154	Magnesium alloy *bs*	3-ft. ×28-in. Conical ball mill	Screen	Pellets 1/4-in. diam., 1/8-in. thick	Dry	99% <120-m.	20 lb. per hr.	10	1	1,100
155	Magnesium, metallic *bs*	3-ft. ×8-in. Conical ball mill	Rotex screen	1/8-in. chips	Dry	<48-m.	45 lb. per hr.	7 1/2	1/2	356
156	Manganese dioxide	6-ft. ×36-in. Conical ball mill	Hardinge classifier	<3/4-in.	5	99% <200-m.	1.5 t.p.h.	70	15	57
157	Manganese ore	6-ft. ×48-in. Conical ball mill	4 1/2-ft. Superfine classifier	<4-m.	Dry	90% <325-m.	1.5 t.p.h.	90	15	70
158	Manganese ore *q*	Williams 4-roll mill	Pneumatic classifier	<3/4-in.	Dry	90% <325-m.	1.3 t.p.h.	50	62	86
159	Manganese ore *bt*	4 1/2-ft. ×16-in. Conical ball mill	8-m. trunnion trommel	<1/2-in.	Dry	All <8-m., 12% <100-m.	2.5 t.p.h.	20	.....	8
160	Manganese ore	5-ft. ×22-in. Thermomill	24-in. Loop classifier	<3/4-in.	7.7	3.5% >48-m.	3,100 lb. per hr.	27	6	21.2

161	Nitrate with 6 1/2% charcoal *bu*	Batch mill	.....	<20-m.	Dry	80% <200-m.	1,320 lb. in 3 hr.	10	.....	45
162	Phosphate, monocalcium	8-ft. ×22-in. Conical pebble mill	Air-swept *bv*	<1/4-in.	Dry	<150-m.	2,500 lb. per hr.	50		40
163	Phosphate pebble (Brewster District)	Raymond mill *bw*	Raymond classifier	<1/2-in.	Dry	90% <100-m.	5 t.p.h.	100	60	32
164	Phosphate concentrates	6×20-ft. compartment ball-tube mill	Open-circuit	<14-m.	Dry	90% <200-m.	3 t.p.h.	300	.....	100
						90% <60-m.	10 t.p.h.	300	.....	30
165	Phosphate concentrates (Fla.)	Raymond 5-roll mill	Internal air separator	18.4% >20-m., 1.4% <200-m.	Dry	99.8% <35-m., 49.8% <200-m.	7 t.p.h.	123	.....	17.6
						89.0% <100-m., 59% <200-m.	5.7 t.p.h.	122	.....	22
						98.8% <100-m., 95.0% <200-m.	2.3 t.p.h.	105	.....	46
166	Phosphate rock (brown).	Kent mill	10-ft. (diam.) mechanical air separator	<3/4-in.	Dry	90% <80-m.	5 t.p.h.	5	25	16
167	Phosphate rock	Fuller mill	Internal screen	<3/4-in.	Dry	90% <80-m.	8.5 t.p.h.	150	45	23
168	Phosphate rock (Fla. pebble)	Raymond mill *bx*	Internal classifier	<3/8-in.	Dry	95% <80-m.	5.5 t.p.h.	130		23.6
169	Phosphate rock (Fla. hard)	7-ft. ×22-in. Conical ball mill	Rotary air classifier	<2-in.	1	99.5% <80-m.	2.5 t.p.h.	75	10	34
170	Phosphate rock (New Zealand)	6-ft. ×22-in. Conical ball mill	Open-circuit	<3/4-in.	Dry	80% <100-m.	4.2 t.p.h.	55	.....	13.1
171	Phosphate rock (Fla. pebble)	Fuller mill	Internal screen	<3/4-in.	Dry	90% <80-m.	10 t.p.h.	150	45	19.5
172	Phosphate rock (Tenn.)	8-ft. ×30-in. Conical ball mill *by*	Mechanical air separator	<1/2-in.	Dry	95% <100-m.	4.5 t.p.h.	60		13.3

Table 18. Performances of dry-grinding mills *ch—Continued*

No.	Material	Mill	Sizing device	Feed		Product	Capacity	Hp. input		Hp-hr. per ton
				Size	Moisture, %			Mill	Sizing	
173	Phosphate rock (Tenn.)	Raymond 5-roll mill *bz*	Internal classifier	<1-in.	1	90% <100-m.	5.5 t.p.h.	100		19.1
174	Phosphate rock (Tenn.)	Raymond 5-roll mill	Internal air separator	.....	Dry	75% <200-m.	6.4 t.p.h.	102		16.0
						91.4% <200-m.	5.1 t.p.h.	100		19.6
						99% <200-m.	2.5 t.p.h.	93		37.0
175	Phosphate sands, 47.5% SiO_2	6×22-ft. compartment ball-tube mill *ca*	Open-circuit	10~50-m.	Dry	90% <100-m., 75% <200-m.	7.1 t.p.h.	300	.....	42
						90% <60-m., 50% <200-m.	10.5 t.p.h.	300	.....	28.5
176	Pigment, red oxide.....	Raymond 5-roll mill	Whizzer separator	<1/2-in.	Dry	99% <325-m.	1.5 t.p.h.	60	75	90
						99.5% <325-m.	1 t.p.h.	60	75	135
177	Pigment, shale.....	Raymond 5-roll mill	Whizzer separator	<10-m.	Dry	98% <325-m.	2.5 t.p.h.	50	60	44
						99.9% <325-m.	1.25 t.p.h.	50	60	88
178	Pitch, mineral.....	Raymond impact pulverizer	Air-swept	<1-in.	Dry	92% <200-m.	.....	.....	.....	45
179	Pitch, mineral.....	Christy Norris hammer mill	Screen	<2-in.	Dry	<8-m.	1,500 lb. per hr.	35	.....	46.6
180	Pyrite sinter.....	5-ft. ×22-in. Conical ball mill	4 1/2-ft. Superfine classifier	<8-m.	Dry	98.5% <200-m.	1,900 lb. per hr. *cb*	35	15	53
181	Pyrite concentrate *q*...	Williams 4-roll mill	Pneumatic separator	<40-m.	Dry	80% <200-m.	1,850 lb. per hr.	50	63	122
182	Pyrite concentrate.....	6-ft. ×36-in. Conical ball mill	No. 45 Loop classifier	<65-m.	2.5 *cc*	All <100-m., 85% <325-m.	4.3 t.p.h.	40	12	12.4

183	Rutile	4 1/2-ft. × 16-in. Conical ball mill	5-ft. Gayco air separator	<20-m.	Dry	98% <325-m.	250 lb. per hr.	21	5	210
184	Rutile *q*	Williams roller mill	Pneumatic classifier	<20-m.	Dry	98% <200-m.	1,500 lb. per hr.	50	50	130
				<3/4-in.	Dry	90% <325-m.	1,120 lb. per hr.	50	50	178
185	Rutile *q*	6-ft. × 36-in. Conical ball mill	10-ft. Gayco air separator	<1 1/2-in.	Dry	90% <325-m.	1,550 lb. per hr.	60	17	97
186	Sand (silica)	7-ft. × 22-in. cylindrical pebble-tube mill	14-ft. Sturtevant air separator	<20-m.	Dry	98% <200-m.	6,000 lb. per hr.	185	35	73
						98% <325-m.	3,600 lb. per hr.	185	35	123
187	Sand (silica)	6-ft. × 22-in. Conical ball mill	Closed-circuit with 20-m. screen	<1/2-in.	Dry	All <20-m., 35% <100-m.	4,500 lb. per hr.	55	5	26.5
188	Sand (bank)	5-ft. × 36-in. Conical ball mill	4 1/2-ft. Superfine classifier	<1/4-in. fines	Dry	95% <200-m.	2,500 lb. per hr.	30	8	30.3
189	Sand (silica)	8-ft. × 84-in. Conical pebble mill	6-ft. Superfine classifier	<30-m.	Dry	99.5% <200-m.	3,400 lb. per hr.	90	30	70
				<16-m.	Dry	95% <200-m.	4,500 lb. per hr.	90	30	53
190	Sand (silica)	7 × 22-ft. cylindrical pebble-tube mill	12-ft. Sturtevant air separator	<20-m.	.....	99% <200-m.	6,000 lb. per hr.	164	24	63
						80% <200-m.	8,000 lb. per hr.	164	24	47
191	Silica gel	6-ft. × 48-in. Conical pebble mill	Loop classifier	<8-m.	Dry	96% <100-m.	2,200 lb. per hr.	25	7 1/2	29.5
192	Silicon carbide	6-ft. × 22-in. Conical ball mill	40-m. vibrating screen	<1/4-in.	Dry	All <40-m., 95% <80-m.	1,500 lb. per hr.	50	5	73
193	Silicon carbide	6-ft. × 22-in. Conical ball mill	Vibrating screen	<1/4-in.	Dry	All <8-m., 9.4% <200-m.	1,800 lb. per hr.	40	3	47.7
194	Slag	3 @ 6 × 22-ft. cylindrical ball-tube mills in series	Open-circuit	<1/8-in.	Dry	94.5% <200-m.	10.3 t.p.h., total	650		63
195	Slag	5 1/2 × 18-ft. cylindrical ball-tube mill	Open-circuit	<20-m.	Dry	80% <200-m.	11.9 t p.h.	165	.....	14

Table 18. Performances of dry-grinding mills *ch*—*Continued*

No.	Material	Mill	Sizing device	Feed		Product	Capacity	Hp. input		Hp-hr. per ton
				Size	Moisture, %			Mill	Sizing	
196	Slag	7-ft. ×48-in. Conical ball mill	6-ft. Superfine classifier	<3/4-in.	2	95% <200-m.	3.75 t.p.h.	125	32	42
197	Sodium silicate	6-ft. ×48-in. Conical pebble mill	No. 36 Loop classifier	<3/8-in.	Dry	75% <200-m.	3,500 lb. per hr.	65	16	46.3
						98% <200-m.	2,500 lb. per hr.	65	16	64.8
198	Sodium silicate	6-ft. ×22-in. Conical pebble mill	Octagonal trunnion trommel	<1-in.	Dry	<20-m.	1,280 lb. per hr.	18	.....	29
199	Spodumene *q, cd*	33-in. Fuller mill	6-ft. mechanical separator	<20-m.	Dry	92% <325-m.	1,000 lb. per hr.	40	17	114
200	Spodumene	Williams 4-roll mill	Pneumatic separator	<20-m.	Dry	92% <325-m.	1,450 lb. per hr.	50	62	154
201	Spodumene	6-ft. ×36-in. Conical ball mill	10-ft. mechanical air separator	<20-m.	Dry	92% <325-m.	1,425 lb. per hr.	60	17	108
202	Sulphur	Raymond 4-roll mill	Air classifier *ce*	<1-in.	Dry	97% <200-m.	5,000 lb. per hr.	100	.....	40
203	Sulphur (lime)	3-ft. ×8-in. Conical ball mill	Hum-mer screen	<1/4-in.	Dry	<40-m.	1,000 lb. per hr.	6	2	16
204	Sulphur	4 1/2-ft. ×16-in. Conical ball mill	Hardinge rotary classifier	<1-in.	Dry	90% <100-m.	4,000 lb. per hr.	18	5	11.5
205	Sulphur	No. 5047 Raymond roller mill	6-ft. Whizzer separator *cf*	.....	Dry	98% <325-m.	7,800 lb. per hr.	50	50	25
						99.9% <325-m.	1,600 lb. per hr.	5	50	69
206	Talc (Calif.)	No. 5047 Raymond roller mill	5 1/2-ft. single-Whizzer separator	.....	Dry	89% <325-m.	6,200 lb. per hr.	50	30	26
						99.98% <325-m.	720 lb. per hr.	100		280

207	Talc (N. Y.).....	8-ft. ×48-in. Conical pebble mill	14-ft. Gayco air separator	<3/8-in.	1 1/2	99.6% <200-m.	1,250 lb. per hr.	60	24	139
208	Talc (N. Y.).....	6×22-ft. cylindrical pebble-tube mill	Open-circuit	<10-m.	Dry	97.6% <80-m., 82.8% <200-m.	1,500 lb. per hr.	112	.....	150
209	Talc (Vt.).....	35-in. Raymond vertical hammer mill	Integral double Whizzer	<200-m.		100% <30 μ, 76% <10 μ	720 lb. per hr.	100		280
210	Tin (cassiterite concentrate)	5-ft. ×36-in. Conical ball mill	No. 36 Superfine classifier	<14-m., 60% <50-m.	Dry	<100-m.	1,450 lb. per hr.	37	5	58
211	Tripoli.....	8-ft. ×36-in. Conical pebble mill	14-ft. mechanical air separator	< 1/4-in.	Dry	97% <325-m.	2,500 lb. per hr.	50	20	56
212	Tungsten (wolframite concentrates)	5-ft. ×36-in. Conical ball mill	3-ft. Superfine classifier	<1/2-in.	3	99.5% <200-m.	2,000 lb. per hr.	28	10	38
213	Tungsten (wolframite)	3-ft. ×8-in. Conical ball mill	Open-circuit	<2-in.	Dry	75% <200-m.	150 lb. per hr.	6	.....	80
				<20-m.	Dry	75% <200-m.	310 lb. per hr.	6	.....	39
214	Vanadium ore.....	6-ft. ×22-in. Conical ball mill	100-m. vibrating screen	<2-in.	Dry	<100-m.	4,000 lb. per hr.	50	5	27.5
215	Vanadium ore.....	4 1/2-ft. ×13-in. Conical ball mill	Open-circuit	<1 1/2-in.	Dry	All <10-m., 40% <60-m.	3,000 lb. per hr.	20	.....	13.3
216	Zinc concentrates.....	6-ft. ×48-in. Conical ball mill	No. 54 Superfine classifier	45% <200-m.	Dry	97% <200-m.	8,500 lb. per hr.	65	20	20
217	Zinc oxide.....	4×4-ft. cylindrical ball mill	Open-circuit	<1/8-in.	0.5	9% >20-m., 42% <100-m.	2,000 lb. per hr.	27	.....	27
218	Zinc skimmings.....	4 1/2-ft. ×16-in. Conical ball mill	16-m. trunnion trommel	<4-in.	2	*cg*	4,000 lb. per hr.	18	.....	9
219	Zircon *q*.....	42-in. Fuller mill	8-ft. mechanical air separator	<30-m.	Dry	90% <325-m.	1,230 lb. per hr.	60	27	140

NOTES for Table 18.

a Reclaiming metal in foundry waste.
b 3 products: >4-m. metallics, 4∼16-m., <16-m.
c 3 products: >8-m. metallics, 8∼28-m., <28-m.
d Powder bright and flaky; highly explosive.
e Product used as an abrasive; hard.
f Artificial alumina abrasive; hard.
g Vertical grate and discharge scoop.
h Dense, fibrous.
i Light and fluffy; for coating welding rods.
j For making fine fiber from residue following hammer-mill crushing and separation.
k Hot-air drying in mill.
l Limits capacity; hot-air sweeping not used.
m Bag-collector product.
n Successively crushed in 150-lb. and 75-lb. stamps.
o From sugar-cane stalks; light and fluffy; must be fed hot and dry.
p Fed hot and dry; air must be excluded as much as possible; cannot be screened.
q Data from Foote Mineral Co., Philadelphia, Pa.
r Very soft.
s Surface area, sq. cm. per gm.
t 28 #7 PQ 80; 31 #1 PQ 69.
u 31 #1 PQ 69.
v 45 #8 RP 70.
w Compare with following, MEDUSA PORTLAND CEMENT Co., York, Pa.
x Compare with preceding; same mill with air classifier.
y Repair costs 1.7¢ per bbl.
z Ball consumption, 0.035 lb. per bbl.
aa Hot, hard.
ab Ball consumption 0.097 lb. per bbl.
ac 45 #8 RP 70.
ad 200 r.p.m. of driving roll; life of rings, 5 mo.
ae ALPHA CEMENT Co., *29 #1 PQ 33.*
af LEHIGH PORTLAND CEMENT Co., *45 #8 RP 35.*
ag Circulating load up to 1,000%.
ah Ball consumption, 0.1 lb. per ton; liner life >15 yr.; Electric Ear control.
ai SANTA CRUZ PORTLAND CEMENT Co., *34 #1 PQ 54.*
aj IC 6448.
ak Roll life, 6 mo.; screens, 30 da.
al LEHIGH PORTLAND CEMENT Co., Fogelsville, Pa.
am IC 6448. This mill and the one following in parallel.
an Combined output of two mills.
ap Hot.
aq Drying in mill; moisture in product, 5.6%.
ar 18% ash; abrasive.
as 28% ash.
at Air entering mill, 300° F.; *34 #11 PQ 66.*
au Unit mill firing cement kiln. *44 #12 RP 34.*
av 57 Hardgrove grindability.
ay 1,800 r.p.m.
aw Heated air.
az Rod wear 1 lb. per ton.
ax COPLAY CEMENT MFG. Co., *44 #7 RP 28.*
ba Material soft; wear negligible.
bb Mill dumped about once a week to remove metallics.
bc Shells of Cr or Mn steel.
bd Three mills bracketed are treating same feed.
be 3,200-lb. batch; time ranges from 7 1/2 hr. for dry feed to 12 or 15 hr. for 1 1/2% moisture.
bf 2 1/2 hr. per batch.
bg Grinding time only.
bh 3 hr. actual grinding time.
bi Parallel operations.
bj Peripheral-discharge rod mill converted.
bk Maintenance, 80¢ per ton.
bl Ground to increase plasticity.
bm Ball consumption 0.1 lb. per ton.
bn 5-, 4-, and 3-in. forged-steel balls.
bo Feed to screen, closed-circuit.
bp Very hard. Ball wear, 11 lb. per ton; life alloy-steel lining, 1 yr.
bq Tests.
br 1,500 r.p.m.
bs Nitrogen atmosphere; all equipment grounded.
bt Minimum fines wanted.
bu Charcoal prevents nitrate from packing.
bv Air sweeping necessary for satisfactory grinding.
bw 3¢ per ton maintenance.
bx Cost 68¢ per ton.
by 2-in. steel balls; silex lining lasts more than 9 yr.
bz Maintenance, $175 per mo.
ca Ball consumption, 1.75 lb. per ton.
cb 1,700 lb. per hr. without Electric Ear.
cc Feed damp and lumpy; drying in mill with SO_2 gas at 350° F.
cd Tough, flaky flotation concentrate.
ce CO_2 gas in circuit.
cf Not less than 10% CO_2 to prevent dust explosion.
cg >16-m. is metal.
ch Detailed performance data for dry grinding are scarce and hard to collect. The data given in this table were collected over a period of many years by the staff of the Hardinge Co., the sources being, except where otherwise footnoted, operating observations by staff members, or private communications from operators. The predominance of data concerning Conical mills is not to be taken as a representation of similar predominance in installation frequency; it results from the fact that these were naturally the items of maximum interest to the collectors of the data.

Crude is sized at 2- to 4-in., according to the amount of coarse material present, and oversize and undersize are separately binned. Feed to the mill is then drawn from the coarse and fine bins in such proportions as to maintain suitable quantities of lump material in the mill. The mill is swept with hot air. The manufacturer offers mills 5- to 20-ft. diameter, powered at 6 to 1,200 hp. CAPACITIES are rated at about 1 ton per hp.-day to 70 to 80% <200-m.

At CONSOLIDATED MINING & SMELTING Co. a 12×4-ft. mill ground 140 t.p.d. of regular run-of-mine ore to 84% <200-m. with a total power consumption, including feeding, grinding, and air classifying, of 18 kw-hr. per ton. The ore was quartz and schist; after grinding, it was pulped and cyanided. Electric Ear sound control units added to two of these mills increased over-all capacity 15% (C. T. Oughtred, *PC*).

4. OPERATION OF DRY-GRINDING MACHINES

The gauges of operation, with the product specified, are capacity and cost. Each of these, in dry grinding, depends upon a variety of factors having to do with (*a*) the raw material, (*b*) the product specified, (*c*) the machine used, (*d*) the auxiliaries, and (*e*) the way in which both machine and auxiliaries are run.

Raw material is, to a much greater extent than in wet operation, the controlling factor in the choice of a mill for dry grinding. For this reason Table 18, giving capacities and power consumptions of a variety of mills in a large variety of services, is arranged in alphabetical order of materials ground.

Raw materials vary widely in native characteristics and in the state in which they come to the grinding plant. The important criteria are innate resistance to grinding forces, size, and moisture content.

Grindability is broadly defined as the response of a material to grinding effort. As of the present, a variety of methods aimed at numerical expression of grindability have been proposed (Sec. 19, Art. 11). The Hardgrove method is extensively used in dry grinding. Hardgrove ratings for a number of raw materials are given in Table 19. Ratings based on dry ball milling are given in Sec. 5, Table 46, and based on dry rod milling, in Sec. 5, Table 47. See also Sec. 5, Tables 44, 45, 48, 49, and the accompanying text. No method of rating has proven worthy of acceptance as standard. The ratings in Table 19 herein, having been made in a ball-bearing type of mill, are an index of probable relative behaviors of the materials tested, if ground commercially in mills of the same type. The ratings in Tables 46 and 47, Sec. 5, are of similar worth for tumbling mills. Commercial performance data are better than either, if reliable, and reasonably parallel. But the variations in rating of materials with the same chemical designation, as shown in the tables; the differences that are met with in the responses of materials from the same mine or quarry; and the differences in comparative positions of given materials in different tables, and of the same material ground to different sizes as listed in the same table, are all their own separate warnings to be cautious in using any of the ratings. Ample safety factors must be applied, even when the basic reference, the operating mill, is well authenticated.

Classification of materials as they should be considered in selection of proper grinding equipment follows:

Hard, friable, abrasive: Coke, feldspar, quartz, cement clinker.
Hard and tough: Metals, mica (hard rubber, wood).
Medium hard, friable: Limestone, barite, coal, phosphate rock.
Soft, friable: Salt, sulphur, clay, borax.
Fibrous: Asbestos (grain, leather, bone, roots, wood).
Soapy: Talc, graphite, gypsum.
Sticky: Resins, asphalt, certain oxides and chemicals.

Size of feed has a different incidence upon dry-grinding capacity according to the type of machine used. In general the higher the speed at which load is applied, the heavier the comminuting body, and the softer or more friable the material ground, the smaller the effect of feed size. Thus performance of a hammer mill is much less affected by variation in feed size than is a tumbling mill.

For hammer mill see Sec. 5, Figs. 58, 59. Table 18, item 88, shows a small effect only in a rod mill grinding soft and coarsely brittle petroleum coke. Table 20 shows a definite effect on tonnage and power consumption with a large tumbling mill grinding clinker, but the effect is in no way proportionate to the change in limiting size of feed. Table 21 shows similar results with a smaller tumbling mill grinding limestone. On clinker (Table 20) there was an increase of 30% in capacity of a mill consuming 400 hp., or a saving of 7.2 hp-hr. per ton, by reason of a preliminary reduction through the range from <3/4-in. to <6-m. Such reduction can be done for half or less of this cost in a fine crusher. The difference was even more striking in the case of limestone (Table 21). Table 18, item 213, shows a saving of slightly more than 50% in power consumption with a small tumbling mill for reduction in feed size from <2-in. to <20-m. A large part of this saving would have been made if the feed-size reduction had been to 1/4-in only (see Table 21), and the relatively costly preliminary reduction from <1/4-in. to <20-m. could thus have been saved. For general discussion see Sec. 5, Arts. 13 and 14.

Table 19. Hardgrove grindability ratings of various materials *a*

Material	Grindability
Alunite; Pike County, Utah	92
Ammonium chloride	27
Anthracite: Luzerne Co.	21 to 34
Schuylkill Co.	33 to 53
Carbon Co.	30 to 33
River coal	28 to 40
Barite (crude)	116
Bauxite, Arkansas	39 to 76
Borax, granular	143
Boric acid	40
Calcium sulphide	156
Cellulose acetate	7
Cement rock, raw mix, from:	
Alabama	47
California	79
Indiana	78
Iowa	68
Kansas	120
Maryland	47
Missouri	93
New Jersey	67
New York	53 to 57
Ohio	58
Oklahoma	63
Pennsylvania: Philadelphia	84 to 95
East	82 to 95
Lehigh Valley	64 to 74
West	67 to 83
Virginia	50 to 54
Washington	43 to 79
Wisconsin	103
Chrome ore, African	35
Chrome, Turkish	62
Clay	97
Clinker, cement, from:	
Alabama	31
California	34 to 79
Florida	40
Georgia	33
Indiana	41
Iowa	34
Kansas	46
Michigan	39
Nebraska	50
New York	36 to 48
Oklahoma	43
Oregon	44
Pennsylvania: East	34
Lehigh Valley	27 to 30
West	26 to 34
Tennessee	30 to 39
Washington	37
Coal, bituminous, from:	
Alabama: Mary Lee seam	72 to 85
Walker seam	49 to 55
Colorado, Paramie	44 to 47
Illinois: Franklin Co. No. 6	54
Henry Co. No. 2	62
Kentucky: Harlan Co.	50
Pike Co., Pond Creek	56
New Mexico, San Juan	37
Ohio, Pittsburg No. 8	57
Pennsylvania:	
Allegheny Co. Pittsburg seam	58 to 71
Cambria Co., Lower Freeport seam	99
Lower Kittanniny	105
Fayette Co., Pittsburg seam	62
Jefferson Co., Lower Freeport seam	96
Westmoreland Co., Pittsburg seam	63
Texas, Maverick Co., Eagle Pass	90
Webb Co.	35
Utah, Carbon Co.	43 to 46
Washington, King Co., McKay	29 to 42
Pierce Co., Wilkison No. 7	107
West Virginia, Boone Co., Winifrede	39
Kanawha Co., No. 2 Gas	52
McDowell Co., Pocahontas No. 3	103
Canada, Alberta, Frank Blairmore	61
Kootenay	124
British Columbia No. 1	108
Nova Scotia, Emery	45 to 70
Vancouver Island, New Castle	50 to 67
Feldspar	43
Gold ore: McIntyre Porcupine	56
Lake Shore	30
Noranda	70
Dome	53
Graphite: amorphous	73
crystalline	47
Hematite, black	35
Hematite, red	96
Iron borings, cast	9
Iron ore	38
Iron oxide	57
Iron oxide	160
Lead concentrate: high-grade	81
low-grade	51
Lead, unmilled red	150
Lime	105
Limestone	54 to 78
Magnesite	44 to 64
Manganese ore, Montana	65
Mica	7
Phosphate, tricalcium	134
Pitch, crude hard	115
Resin, unground synthetic	14
Resin	175
Rubber, hard	19
Rutile	26
Salt	54
Sand (silica)	24 to 55
Sludge, dried activated	62
Sulphur, raw	104
Talc	67 to 130
Zinc oxide	103

a Grindability increases with magnitude of rating number.

Moisture. Control of moisture in feed and throughout the circuit is of vital importance in dry grinding, particularly in circuits containing screens. Some types of mills will tolerate more moisture than others, and the tolerance in a given circuit differs with the material fed. The dry pan, hammer mill, and rod mill can tolerate the most moisture; tube mills probably the least. In a way this is no more than saying that mills doing coarse grinding without screens can tolerate sensible quantities of moisture, but that moisture in quantities greater than $^1/_2$% for softer materials of 2.6 sp.gr., ±1% for hard silicates, and 1 to 1 $^1/_2$% for bituminous coal, is fatal to efficient fine grinding with or without screens, unless some provision is made to take care of it. If a mill is air-swept at atmospheric temperatures, the feed (2.6 sp.gr.) may contain as much as 3 to 6% moisture, and if swept with hot gas, may contain from 20% in a tumbling mill to as high as 40% in a hammer mill.

The moisture will, however, affect capacity and power consumption, even though the mill still continues to grind. Thus, as shown in Table 18, item 77, a 5-roll Raymond mill with built-in classifier lost 25% in capacity and suffered an increase of 50% in power consumption per ton as the moisture content of the bituminous coal received rose from 0.8% to 4%; the loss for an increase to 1.2% was 14%. An 8-ft.×36-in. Conical pebble mill, with a gas flame introduced at the feed end, and in closed-circuit with a reverse-current classifier, ground <3/8-in. clay for pottery, with 25% moisture, at the rate of 1,600 lb. per hr. to 95% <200-m. At 12% moisture, capacity was 2,200 lb. per hr. to the same fineness. The same mill without air classifier and heat could not grind this clay if the feed contained more than 3% moisture.

Predrying is preferred for materials subject to contamination by direct contact with gases of combustion, or where high vent loss is inevitable and the product is valuable, or when mill drying might cause harmful chemical reactions or physical changes. Certain types of mills are so designed that passage of gas through the mill during operation is impractical or substantially ineffective.

Effectiveness of drying. Capacity of a 5-ROLL RAYMOND HIGH-SIDE MILL grinding Missouri clay to 99.5% <325-m. was increased 30% by drying the feed, which initially contained 5% moisture. Caking in the mill was eliminated and uniformity of product was increased. Capacity of an 8-ft. CONICAL PEBBLE MILL, grinding feldspar in closed-circuit with a mechanical air classifier, but operating with no air passing through the mill, was increased 25% when moisture was reduced from 8% to <1%. Capacity of a Fuller SCREEN-TYPE MILL grinding cement rock was increased 50%, screen maintenance was reduced to 20% of the former figure, and power decreased more than 25% by predrying.

Size of product has, probably, the greatest effect of any single factor on the capacity

Table 20. Capacity *vs.* ball load, feed size and hardness, product fineness, and speed in a Conical ball mill-air classifier circuit, grinding cement clinker *a*

	Varying ball load				Varying feed size			Varying fineness of product				Cooled and aged clinker *b*		Varying speed		
Ball load, tons	**22.5**	**29.5**	**31**	**32.5**	29	29	29	29.5	30	30	32	30	30	29	29	29
Speed, r.p.m.: Mill	18	18	18	18	18	18	18	18	18	18	18	18	18	**17**	**18**	**19**
Fan	875	875	875	875	875	887	887	887	887	887	887	887	887	887	887	887
Capacity: Bbl. per hr.	70	72	77	75	75	88	98	125	102	94	88	78	110	100	82	88	90
Tons per hr.	13.2	13.6	14.6	14.2	14.2	16.6	18.5	23.6	19.3	17.8	16.6	14.8	20.8	19.0	15.5	16.6	17.0
Size of feed, in.	<3/4	<3/4	<3/4	<3/4	<3/4	<1/4	<6-m.	<3/4	<1/4	<1/4	<1/4	<1/4	<1/4	<1/4	<1/4	<1/4	<1/4
Product, % <200-m.	88	88	88	88	88	88	88	**66**	**82**	**85**	**93**	**82**	**85**	88	88	88	88
Power consumed, hp.: Mill	375	400	402	401	400	405	416	400	414	414	417	414	414	385	405	435
Fan	96	96	96	96	96	100	100	107	100	100	100	100	100	100	100	100
Total	471	496	498	497	496	505	516	507	514	514	517	514	514	485	505	535
Hp-hr. per bbl.	6.75	7.38	6.48	6.62	6.62	5.75	5.26	4.05	5.00	5.48	5.75	6.6	4.68	5.14	5.92	5.73	5.93
Hp-hr. per ton	35.7	36.5	34.1	35.0	35.0	30.5	27.8	21.8	26.7	29.0	30.5	35.0	24.7	27.0	31.2	30.3	31.5

a 10-ft. × 66-in. mill at SANTA CRUZ PORTLAND CEMENT CO., Davenport, Calif. *b* Somewhat softer than fresh clinker.

Table 21. Effect of feed size and ball rationing on performance of a Conical ball mill grinding limestone *a*

Screen	Percentages passing							
	Feed				Product			
	15 t.p.h.*b*	19 t.p.h.*b*	23 t.p.h.*b*	25 t.p.h.*c*	15 t.p.h.*b*	19 t.p.h.*b*	23 t.p.h.*b*	25 t.p.h.*c*
5/8-in.	100	100	.....	.....	.....	.....	.....	.....
1/2	.....	96	.....	.....	.....	.....	.....	.....
3/8	.....	.....	100	.....	.....	.....	.....	.....
5/16	.....	.....	84	.....	.....	.....	.....	.....
1/4	0	76	68	100	.....	.....	.....	.....
6-m.	.....	23	18	88	.....	.....	.....	.....
20	.....	.....	.....	46	98	99	98	97
50	.....	.....	.....	26	72	68	68	80
100	.....	.....	.....	16	53	48	48	55
200	.....	.....	.....	.....	38	36	37	38

a 8-ft. ×48-in. Conical mill, 20 r.p.m., 200-hp. motor, in closed-circuit with a 4 ×8-ft. Hum-mer screen (Type 72, B-32 vibrator), 18-m. cloth.

b, *c* Ball load:	3½-in.	3-in.	2-in.	1-in.
Lb. *b*	12,000	10,200	11,800	.....
c	.....	7,350	11,800	10,250

of a grinding machine. For general discussion of the effect in tumbling-mill operation see Sec. 5, Art. 13. For effects on performances of a variety of mills see Table 18, items 4, 16, 20, 21, 37, 60, 61, 64, 93, 100, 102, 117, 118, 141, 148, 164, 174, 175, 176, 177, 178, 179, 186, 189, 190, 197, 205, 206.

A Bradley Hercules mill grinding cement clinker handled 150 bbl. per hr. with 4 1/2-m. screens on the mill, 135 bbl. per hr. with 6-m. screen, 125 with 8-m., 120 with 10-m., and 110 with 12-m., drawing about 300 hp. in all cases. Screen maintenance was unduly high with screens finer than 8-m.

Effect with a Conical ball mill grinding cement clinker is shown in Table 22. Reduction in tonnage was 23% for a change in percentage of <200-m. from 82 to 93, holding feed size constant at <1/4-in.

Table 22. Effect of change in size of product on performance of a Conical mill in preliminary grinding of clinker *a*

Feed rate, bbl. per hr...	100	66
Size of product.....	All <16-m., 26% <200-m.	0.8% >30-m., 44% <200-m.
Ball load, lb.....	30,000	29,000
Power consumed: Hp...	150	148
Hp-hr. per bbl.....	1.5	2.2

a Circuit closed by Hum-mer screen; <1-in. feed; 21 r.p.m.; 4-, 3-, and 2-in. mixed ball charge; 8-ft. ×30-in. mill.

Small changes in limiting size of product are of considerable importance from the standpoint of capacity Fig. 35, which gives the relationship between percentage and power consumption, may be interpreted in terms of capacity on the basis that capacity is inversely proportional to power consumption. It follows that full advantage should be taken of tolerances in limiting-size specifications; 2 or 3% oversize on the limiting screen as against 100% through adds materially to plant capacity. See also Table 18, items 4, 176, 177, and 205. The effect is less the coarser the nominal limiting mesh; *cf.* items 60 *vs.* 61, and items 99 and 177, Table 18. The explanation is, of course, that in grinding the last small fraction of material coarser than limiting size, a large amount of new surface is produced from the material already smaller than the limiting screen, and this requires both time and energy.

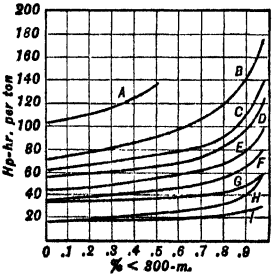

FIG. 35. Product size *vs.* power consumption (*after Farrant, 18 ICE 56*).

Machine. Capacity of machines per unit of weight and, in general, per unit of energy input, increases with the speed of the moving parts. This is particularly true in the reduction of coarser sizes to coarsely fine sizes (preliminary or first-stage grinders), and would probably be true of fine reduction also, if mechanical means for utilizing very high speeds in such service were developed. On the other hand, the wear of high-speed comminuting surfaces is considerably greater for a given reduction of a given material than it is for the slower machines, and it in-

creases disproportionately both in extent and harmful effect as the abrasive character of the material increases. A general rule, that was much quoted and largely adhered to for many years, was not to use hammer mills for materials containing more than 5% of free abrasive (siliceous) material, and, whereas this maxim has been more honored in the breach than in the observance of recent years, owing to advantages gained in shape of product, it still holds when such special advantages are absent. The fixed-path mills of intermediate speed are not so closely confined to soft or friable feeds, but they wear badly with hard abrasive material, and lose capacity rapidly in the process. The relatively slow speed tumbling mill is the only type that is continuously efficient with hard and abrasive feeds. Table 23 groups the various dry-grinding mills on the basis of speed of the working surfaces, and lists various attributes. Table 24 lists the classes of mills normally used in grinding various materials. The order of listing of classes is not necessarily the order of use. High-speed and medium-speed mills are normally used for grinding materials of grindabilities equivalent to medium limestones and softer, when fineness specifications are moderate; tumbling mills predominate for the harder materials, and are almost universally used to fulfill specifications for ultrafine products, unless the material is extremely friable.

Table 23. Classes and attributes of dry-grinding mills

Item	Class I	Class II	Class III
Relative speed	Slow	Medium	High
Grinding action mainly by:	Attrition; compression; impact	Compression; attrition	Impact; shearing; attrition
Mills	Tumbling, *viz.*, ball, pebble, tube, rod, batch; pan	Rolls; ring-roll; ball-bearing; buhr	Hammer; disk; cage; jet
Types of materials ground to best advantage	Hard, abrasive, friable	Medium-hard, nonabrasive, friable	Soft and friable; or tough nonabrasive; fibrous
Advantages	Low maintenance; efficiency increases with use *a*; minimum contamination; easy to control; little attention required; character of product	Low power consumption; low floor space	Low first cost; low power consumption; low floor space; character of product
Disadvantages	High first cost; high power consumption in some cases; floor space	High maintenance on hard materials; efficiency decreases with use; character of product	Excessive maintenance on hard materials; efficiency drops with use; lost time high

a Due to wear-in of tumbling load; dependent on proper rationing (see Sec. 5, Art. 6).

Table 24. Mills applicable to dry-grinding of different materials *b*

Material	Class of Mill *a*	Material	Class of mill *a*	Material	Class of mill *a*
Anthracite	I	Drugs	II, III	Ochers, crude	II
Asbestos	I, II, III	Feldspar	I	Ochers, levigated	III
Barite	I, II	Filter cake	III	Ores	I
Bauxite	II	Frit (Enamel)	I	Oxides	II, III
Bone	II, III	Fullers' earth	II, III	Phosphate, pebble	I, II
Borax	III	Glass	I, III	Plastics	II, III
Carborundum	I	Graphite	I, II, III	Pyrite	I
Coal, bituminous	I, II, III	Grog	I	Quartz	I
Clay	II, III	Gypsum	II, III	Resins	II, III
Cement clinker	I	Limestone	I, II, III	Slag	I
Coke	I	Lithopone	I, II	Sulphur	II, III
Colors	II, III	Magnesite	II	Talc	I, II, III
Concentrates	I	Metals	I, III		

a See Table 23. *b* See also Table 19.

Sizers. Rarely is material ground as effectively in a once-through open-circuit operation as when the grinding circuit comprises a grinding machine and one or more separators designed to remove product that is finished on a size basis, and to return unfinished material to the grinding zone. The separators in dry-grinding circuits are screens and air classifiers. They may be built into the grinding-machine structure, or be wholly separate

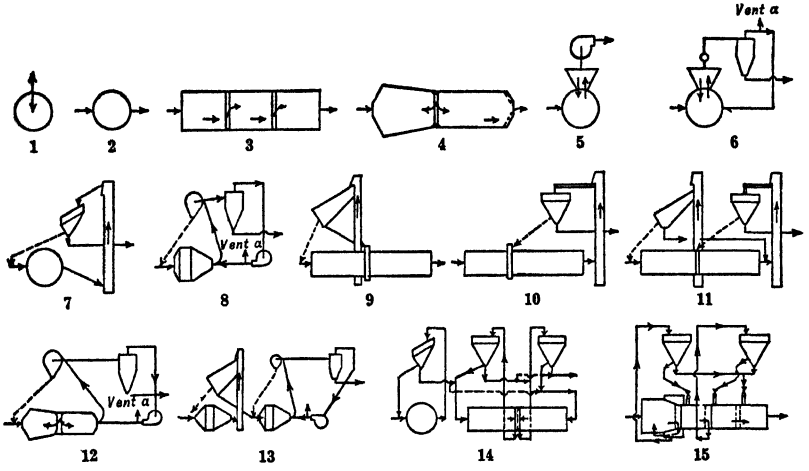

1. Batch operation. A suitable amount of material is charged; the mill is run for a predetermined time, then is stopped and dumped. Tumbling mills, pan, and chaser mills are so run.

2. Open-circuit operation. Material is fed and discharged continuously, once-through. All types of mill, except batch tumbling mills, can be so operated; success varies.

3. Compartment mill with tumbling-media decrease in size from compartment to compartment. Useful for relatively coarse feed and large limiting reduction ratio (Sec. 4, Art. 2).

4. Compartment mill with screen in the division head, affording internal separation and return of oversize. Efficiency is considerably higher than the arrangement shown in (3), where oversize particles can pass from one compartment to the next.

5. Air sweeps through the grinding zone. Separation and recirculation in the mill are more or less thorough according to the interior arrangement. This arrangement applies to hammer mills, roller mills, ball-bearing mills, and tumbling mills; its greatest application is in unit pulverizing of fuels for firing boilers, kilns, furnaces, and the like.

6. Closed-circuit system typical of roller, hammer, ball-bearing, and ring-roll mills. Separation is made by air-sweeping the mill. Vent *a* is to bleed off moisture when hot gas is used.

7. Common practice with most types of mills. Gravity fall from mill to elevator, thence to a screen, with oversize returned to mill. Substitution of an air classifier for the screen is made for fine products.

8. Rough (reverse-current) classification in mill, air transport to external finishing classifier, oversize returned to mill; collector separates product from carrying gas. Vent *a*, see (6).

9. Compartment mill with first compartment in closed-circuit with an external screen, oversize returned to feed stream, undersize to a scoop which feeds second compartment. Suitable for ultrafine grinding; compartments multiplied if necessary.

10. Compartment mill, with second compartment in closed-circuit through an elevator with an air classifier. Product is more closely sized than is possible in (9).

11. Combination of (9) and (10), routed to give a closely sized feed to the second compartment, which increases grinding efficiency, and eliminates tramp oversize.

12. Compartment mill with internal screening; return of oversize to the discharge end of the first compartment; finishing in the second compartment, with roughing out of fines, and finished separation in an external classifier which returns oversize for repassage through both compartments.

13. Two-stage grinding in separate circuits, the first closed by a screen through an elevator; the second having internal and external classification (*cf.* 8). Maximum flexibility in installation and operation; desirable when coarse feed is reduced to a very fine product.

14. Three-stage grinding in semiseparate units with individual external separators. Primary circuit closed by a screen; undersize to coarse end of a double-ended ball mill with central partition and central discharge; balls in this compartment are larger than in the other; circuit closed, via elevator, by an air classifier delivering undersize to a second classifier which closes circuit on the second compartment via a second elevator, and which makes the finished product of the circuit. In a modification (dotted flow lines) both classifiers make finished products, part of the product of the preliminary mill being by-passed to the fine end to balance the circuits.

15. A four-compartment mill. Circuit on first compartment closed by peripheral screens, sending undersize to an air classifier which delivers oversize to second compartment; this operates once-through, and delivers to a second air classifier, which feeds oversize to third compartment, likewise operated once-through, which delivers to fourth compartment operating open-circuit on this feed and the fines of both classifiers.

FIG. 36. Dry-grinding circuits.

The arrangements of flow using separate machines for the two functions are legion. Several are shown in Fig. 36.

Efficiency of separation. The separator need not be highly efficient in removing all of the material finer than a prescribed separating mesh in order to perform its function satisfactorily. The primary purpose of separation is to clear the voids between the particles to be broken to such an extent that the interstitial filling will not act as a cushion protecting these particles from the comminuting forces. The sizes important to remove are those near the separating size, since they have the greatest filling and cushioning effects. More fines may be permitted to return when the reduction per pass is large than when it is small. Removal of fines from initial feed is unnecessary, therefore, unless the percentage is unusually large, or a small reduction only is contemplated. Thus at INTERNATIONAL NICKEL Co. (E. H. Rose, *PC*) it was found that with 19% of finished (<65-m.) product in <3/8-in. feed to wet-grinding ball mills, capacity was substantially identical whether new feed was introduced into classifier or mill. The data bear equally on dry grinding, except that in dry grinding the finest material agglomerates and coats balls and should, therefore, be eliminated from the return.

Screens *vs.* classifiers. The choice is not clear-cut. Screens are used perforce at sizes coarser than 10-m. because of limitations of the classifier (see Sec. 9). Classifiers, on the other hand, preempt the field at sizes below about 48-m., because of the tendency of screens to blind if anything above a barest minimum of moisture is present. In the twilight zone (10- to 48-m. separations) the weight of practice is to use screens as far down as can be done. See Table 18, items 67, 68.

Open *vs.* closed circuit. The weight of experience is in favor of closed-circuit operation, except when an ultrafine product, beyond the lower limit of effective air classification, is required.

At MEDUSA PORTLAND CEMENT Co., York, Pa., an 8×7; 7×17-ft. two-compartment mill was converted from open- to closed-circuit operation. The feed was <2-in. kiln-run clinker; product open-circuit, 88% to 90% <200-m.; speed, 22 r.p.m.; 600 hp. motor; actual power draft about 550 hp.; ball charge, preliminary compartment, 5-in. to 2-in., steel, 22,000 lb.; finishing compartment, 7/8-in., 70,000 lb.; ball consumption, 0.55 to 0.66 lb. per bbl.; manganese-steel liner life, preliminary compartment, 4 yr.; finishing compartment, 12 yr. Before the change, an Electric Ear was installed. Average capacity at that time was 71 bbl. per hr. Sound control steadied the fineness from ±4% difference in <200-m. to ±1% difference. When the mill was changed over, a 16-ft. Sturtevant air classifier was installed, with a 75-hp. motor. A 10-hp. motor was required on the elevator from the mill to classifier. Oversize return from the classifier was at first sent to the second compartment, as in item 10, Fig. 36. Later, oversize was returned direct to the feed end of the preliminary compartment, with improved results. Average capacity open-circuit was 71 bbl. per hr. to 89.5% <200-m.; afterward capacity averaged 69.5 bbl. per hr., but fineness was 97% <200-m., 94% <325-m., and 1,650 to 1,700 sq. cm. per gm. surface area.

At the MEDUSA PORTLAND CEMENT Co. plant at Toledo, Ohio (*35 #2 PQ 38; 45 #9 RP 34*), 7×22-ft. two-compartment mills, with center feed and peripheral discharge, operating open-circuit, ground clinker to 92% <200-m. (1,425 sq. cm. per gm.) at the rate of 50 bbl. per hr. per mill. Placing an 18-ft. Raymond air classifier in closed-circuit increased capacity to 60 bbl. per hr. Conversion of one mill to a preliminary ball mill, with feed entering at each end and product discharged at the center, and of the other two mills to plain ball-tube mills; running the preliminary mill in closed-circuit with vibrating screens, and the 18-ft. classifier in closed-circuit with the ball-tube mills, and placing an Electric Ear on the primary, gave the primary a capacity to <20-m. of 150 bbl. per hr., while the finishing mills averaged 79.4 bbl. per hr. per mill, 98% <200-m., 91% <325-m., surface area 1,684 sq. cm. per gm.; consumption of 7/8-in. balls, 0.11 lb. per bbl. The air classifier required 125 hp. and elevators and conveyors 50 hp. The preliminary ball-tube mill was then replaced by 2 @ 9-ft. ×48-in. Conical ball mills, with Feedometers and sound control, each mill operated with 250-hp. motor and in closed-circuit with 3 @ 4×5-ft. Hum-mer screens. Capacity was 100 bbl. per hr. to 95% <20-m., with more than 50% <200-m. Conical-mill motors were 250-hp.; those on the ball-mills, 400-hp. synchronous.

Table 25. Open- *vs.* closed-circuit operation of a clinker mill *a*

	Open-circuit	Closed-circuit
Capacity, bbl. per hr.	60	85
Passing 200-m., %	89	94
Surface area, sq. cm. per gm.	1,450	1,570
Kw-hr. per bbl.	7.0	4.99
Tensile strength, 1 : 3 sand briquets:		
1 day	175	179
3 "	270	280
7 "	315	350
28 "	435	450

a 7×26-ft. two-compartment finishing mill with air classifier.

Table 25 shows an increase in capacity, fineness, and strength of cement following a change from open- to closed-circuit operation. See also Table 18, items 32, 33.

In mills in which the gradient of material determines throughput, and in which there is no internal size guard, a once-through product has more or less tramp oversize, and correspondingly less or more ultrafine material, according to feed rate. The same mill operated closed-circuit with a screen makes a product without tramp oversize, and of a mean size nearer that of the screen aperture the larger the circulating load; *i.e.*, the percentage of very fine material produced depends more upon the rate of passage of an individual particle through the mill than upon the total time spent in the mill. Some ultrafine is pro-

duced no matter how high the circulating load, but a mill which permits the use of large circulating loads reduces overgrinding considerably. Conversely a mill run in closed-circuit with a classifier, with low circulating load, and with tramp oversize excluded, produces a large quantity of ultrafine. A combination of screen and air classifier makes it possible to produce various degrees of fineness simultaneously.

Conditions of operation of a dry-grinding circuit have a material effect on performance. The principal factors are method of feeding, mill speed, kind of grinding media, and temperature.

Method of feeding. If a dry-mill feed were a constant quantity as regards physical properties, size, size distribution, moisture content, and temperature, and atmospheric conditions and the state of the mill itself remained constant, then a constant feed rate would be all that was needed to make a product of consistently uniform size characteristics. Unfortunately none of these things is true, and, as a result, the method of feeding becomes one of the important elements in mill operation.

The characteristics of the product of any grinding mill at any given time depends, all other things being equal, upon the amount of material within it undergoing comminution. High-speed mills reflect this in-mill load sharply in the power draft of the driving motor, hence nominal variation of feed rate in response to indications of instruments on the power line is the usual method of control. Tumbling mills show smaller power fluctuations in reflection of load, and their feed can be and is similarly regulated, but not so satisfactorily. Automatic controls have been developed for both types of mills, which operate with varying degrees of success.

Controls. A pneumatic arrangement on the air classifier of the high-speed air-swept mill has proved satisfactory. With increase in loading of the air stream, pressure changes; this change initiates a mechanical reaction which raises or lowers a ratchet on a constant-speed mill-feeder shaft. An alternative arrangement, utilizing the same pressure difference, causes a shutter to pass over a photoelectric light-actuated cell, thus actuating a relay which controls the feeder motor. Since the power required of a high-speed mill varies directly with the load in the mill, electrical devices, actuated by relays sensitive to changes in the power, are used to actuate the feeder to maintain reasonably stable conditions within the mill. Changes in the settings of these power-actuated controllers are required from time to time to compensate for change in wear of the grinding elements. Where there is a floating material load in a mill, as a ball mill, Frisch (*U. S. Patent 2,291,618*) describes blowing air into the mass and, through the differential in pressure caused by slight differences in material level, actuating a relay system that controls the feeder to maintain the level constant. Sound control (Sec. 5, Art. 18) is applicable to both fixed-path and tumbling mills. Thermostatic controls are used with all air-swept mills in which material is being dried as ground. Control is based on temperature at the mill outlet; temperature or volume of the entering gas is varied in response in order to so vary drying conditions as to maintain discharge temperature constant.

Bins. Even with controls as described, operating difficulties may arise owing to improper bin design which causes bridging or flooding. Flooding tendency is decreased by making two adjacent sides of the bin vertical. Multiple discharge openings are best for bins of large capacity. For steady feeds a Constant-Weight Feeder together with a bin-rapping device, or a feed-failure alarm is of considerable help.

Cost of feed-control devices is 1 to 5% of the cost of the grinding installation; they pay out quickly in resultant economy of operation.

Speed. Capacity or, correlatively, fineness of product increases with speed of all dry-grinding mills, within the limits of the operating range. In most fixed-path mills excessive speeds cause excessive wear and vibration; speeds should not exceed those recommended by the manufacturers. In tumbling mills, speed too much in excess causes partial centrifugal cling; below this point but in the cataracting range capacity is low and ball and liner wear high by striking of balls high on the breast of the mill; as speed is further reduced below cataracting, capacity rises and wear decreases. Hammer-mill speeds that are too low cause too great penetration of the hammer circle, with a sharp drop in capacity and with high wear; within the operating range, the effect on fineness of product is shown in Table 26. See also Sec. 4, Art. 9. Higher speed is required to maintain hammer extension with coarse feed than with fine (*45 CME 230*).

Table 26. Effect of speed on product of a hammer mill (*after Jeffrey Mfg. Co.*) *a*

Speed, r.p.m.	Percentages passing					
	6-m.	10	20	35	65	100
1,000	99	86	66	46	33	28
1,200	100	90	73	54	40	34
1,600	100	94	81	65	50	43

a Limestone; bars spaced 1/8-in.

Grinding media and wearing surfaces. Wear of grinding surfaces is important not only from the standpoints of the cost of replacement parts, and of labor and time lost in making the replacement, but also because, in any machine, the relationship of the parts to each other is changed thereby, and this change affects performance.

Rolls, ring-roll and roller mills tend to corrugate, or to wear more on one side than on another. Rings usually outlast rolls. Balls in ball-bearing machines wear faster than the races, and decrease in size changes the surface of contact against the races. When corrugation occurs or wear is one-sided, effective grinding surface is reduced, and with it capacity. For wear in hammer mills see Sec. 4, Art. 9. Liners in tumbling mills lose longitudinal ribbing; the charge of tumbling media becomes smaller in average size, and may or may not take on a size distribution less favorable to the grinding task, according to how accurately it was rationed originally. Tumbling media frequently wear into irregular shapes, which are not, in general, as effective as spheres or round rods (*124 J 695*). See Table 20 for effect of change in ball load in one case. Figs. 37 and 38 show effects of variation in size and proportioning of balls composing a load on the size and size distribution of products. See Sec. 5, Arts. 5 and 6 for further discussion of changes in performance due to wear.

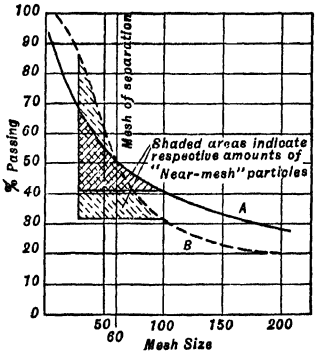

A 2 3/8- and 2-in. balls.
B 5-, 4-, 3-, and 2 1/2-in. balls.

FIG. 37. Ball size *vs.* size distribution, in product.

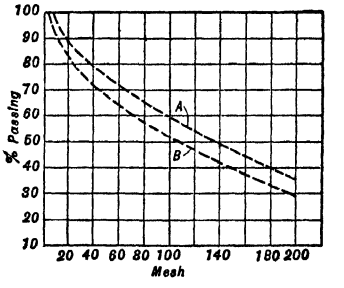

A 63% of 5-in. and 37% of 4-in. balls; feed rate, 2 t.p.h.
B 67% of 5-in. and 33% of 4-in. balls; feed rate, 2.2 t.p.h.

FIG. 38. Ball size *vs.* size of product.

Wear in dry grinding generally is much lower, in all types of machines, than in wet grinding. Liner lives in tumbling mills grinding reasonably soft materials may be 5 to 20 yr.; ball wear ranges from 0.1 lb. per ton or less for soft materials to 3.5 or 4 lb. for hard abrasive materials ground fine from coarse feed. Wear in air-swept mills tends to be less than in those not so operated.

Segregation of tumbling media of mixed sizes occurs to a greater or less degree during rotation, the small sizes going to the middle at low speeds and to the periphery at high (*69 A 200*); best admixture in a transverse plane apparently occurs at a speed just below that at which cataracting starts. There is also a tendency toward longitudinal segregation, with the large balls going toward the ends of the charge. A shell with conical ends and relatively short cylindrical section tends to overcome both of these segregations at the higher operating speeds by a combination of effects. First, in cascading, the conical ends cause the end balls to follow a curved path directed toward the trunnions at the top of the downward travel, and toward the cylindrical section at the bottom, as indicated in Fig. 21. Second, the large balls roll over the irregular surface of the load more readily and, therefore, faster than the small. Hence the large balls run out farther at the toe of the load, which results in their coming up on the outside of the cylindrical section. This serves also to keep them from building up a concentration at the ends. It follows that a short conical mill can be run at higher speeds than a cylindrical mill without losing the impact impulses of the large balls by having them go to the center of the tumbling mass. The short-cylinder conical shell also exerts a wedging effect on the load, which tends to carry it higher at a given lower speed than would otherwise occur, owing to slip; this increases both the in-load pressures (Sec. 5, Art. 3) and the avalanching impulses, and thus increases comminution. The effect of the cone ends in preventing longitudinal segregation is present irrespective of the length of cylindrical section.

Temperature at which charge is ground may have marked effects on the grinding rate by inducing brittleness or reducing stickiness, particularly with organic materials. Conversely, heating may impart brittleness, as with quartz, certain brasses, etc. Materials may be cooled by jacketing the mill, or by mixing dry ice or liquid air with the material. Heating is done by sending hot gases through the mill, or preheating the solid, or both. In grinding cement clinker, temperature may rise to such an extent as to be harmful to the cement, and to reduce grinding rate by causing ball coating.

Power consumption in dry grinding varies according to the material ground, the size of product, the machine in which the grinding is done, and the apparatus used to close the circuit.

Material ground. Classification of materials as to performance in dry grinding depends not only upon the grindability of the material but also upon the size to which it is ground and the method used to grind it. Soft materials are easier to grind to 8- to 20-*mog* than are rocks of average hardness, if medium- or high-speed fixed-path machines are used together with auxiliary apparatus that separates finished sizes rapidly and reasonably thoroughly, but some soft substances, *e.g.*, talc, clay, and some of the lighter carbonaceous materials, are more difficult to grind to 100- or 200-*mog* or finer than average rock is. This is due, in part at least, to inefficiency in separation, and to the cushioning effect of the unseparated fines in the return product. Tough, soft materials may require upward of 2,000 hp-hr. per ton for reduction to fine powders, but brittle metals such as some cast irons can be reduced to intermediate sizes with little more power input than is required for the harder average rocks.

Table 27. Power consumption *vs.* size of product in dry grinding

Mog	Hp-hr. per ton *a*	
	Easy grinding	Average resistance
8 to 14	10	20
20	15	25 to 30
48	20	45
65	25	50
100	30	55 to 60
200	45 to 50	90 to 100
325	60	125 to 150

a These figures are averages of from 5 to 35 or 40 cases for each *mog* and classification of material. The values for 100 and 200 *mog* are most reliable. The extreme range, however, is almost ±50% of the tabular values, representing, in part, differences in the responses to grinding forces of the materials classified in the two groups, and in part, differences in efficiency of the grinding operations.

Size of product. Average figures for power consumption in grinding materials of low resistance and those of average resistance to different *mogs* (0 to 2% on the nominal separating screen) are given in Table 27.

Grinding machine. The lowest power consumptions in coarse grinding of soft materials (Table 27) correspond to substantially once-through operations in mills having built-in screens and provision to aid presentation of material to the screens by mechanical means or strong air currents. For hard materials, the tumbling mills with peripheral screens, or short ball mills in circuit with screens, require the least power. Fine grinding of soft but resistant materials requires much power, no matter what type of machine is used. The weight of the evidence of Table 18, considering the soft carbonaceous materials, clays, gypsum and talc, is that the fixed-path mills do the job with the least power consumption. Even more definitely, fine grinding of hard materials consumes the least power when done in tumbling mills. Comparative data on tumbling mills in such service are found in items 95, 113, 114, 127, 130 and 131. Power consumption for batch grinding is invariably high relative to continuous operation when comparison is on the basis of product passing a limiting screen. On the other hand, if credit were given for ultrafineness, the discrepancy would not be so large.

SECTION 7

SCREEN SIZING

ART.		PAGE
1.	Introduction	01
2.	Capacity and efficiency	04
3.	Screening surfaces	06
	TYPES OF SCREENS	
4.	Grizzlies and fixed screens	21
5.	Revolving screens and trommels	27
6.	Shaking screens	34
	VIBRATING SCREENS	
7.	Open-path vibrators	37
8.	Closed-path vibrators	48
9.	Operation of vibrating screens	62
10.	Traveling-belt screens	70

1. INTRODUCTION

Definitions. SIZING is the process of dividing a mixture of grains of different sizes into groups or GRADES whose characteristic is that the particles therein are more or less nearly of the same size, that all have passed an aperture of certain dimensions and failed to pass through some smaller aperture. The screen through which the particles have passed is called the LIMITING SCREEN; that which has retained them is sometimes called the RETAINING SCREEN. CLOSE SIZING is practiced when the apertures of limiting and retaining screens are nearly the same. The sized product is SHORT-RANGE. A mass of particles is said to be a NATURAL or LONG-RANGE PRODUCT when it has all passed a given limiting screen but has been subjected to no further treatment. Material that stays on a given screen is the OVERSIZE or PLUS (>) of that screen; that passing is the UNDERSIZE or MINUS (<). A SIEVE SCALE is the list of apertures of successively smaller screens in a step-sizing operation. The SIEVE RATIO is the ratio of the aperture of a given screen in a given sieve scale to the aperture of the next finer screen. PERCENTAGE OF OPENING is the ratio of the combined area of the openings to the total area of the screening surface. CLASSIFICATION is a process of approximate sizing; it is discussed in Sections 8 and 9.

Purposes of screen sizing: (*a*) to SCALP off the coarse end of a long-range product, usually for further reduction; (*b*) to cut off the fine end from crusher feeds and thus save power and prevent over-grinding; (*c*) to grade broken rock products into commercial sizes, as for road metal, ballast, concrete aggregate, sands, and the like; (*d*) to perform a step in a concentration process, *e.g.*, to size before jigging (see Sec. 11, Art. 2).

Principles. The fundamental function of screening is to pass undersize particles through the apertures and reject oversize particles. The particles must therefore be brought to the openings and be presented thereto at such a velocity and in such direction that passage of undersize will not be hindered or prevented by rebound from the edges or walls of the opening. If every particle of undersize could be brought to an opening individually, at substantially zero velocity, in a direction perpendicular to the plane of the opening, and with the center of its least projected cross-section in line with the center of the aperture, and if the screening surface had no thickness, every such particle would immediately pass. But tonnage requirements forbid individual and low-velocity presentation, while mechanical considerations prevent perpendicular presentation and the use of screening surfaces of gossamer thickness. Practically, particles are crowded and continually interfering at the apertures, they are presented at considerable velocity, in a direction nearly parallel to the plane of the screen surface, with their maximum rather than their minimum projected surfaces generally parallel to the plane of the screen, and the screen opening has a depth frequently greater than the greatest dimension of the particle of undersize. Many undersize particles are thus excluded for a considerable time from access to an opening; others come to the opening from such a direction or with such orientation or at such velocity that they fail to enter; others, entering, are delayed in passage or stopped by friction against the walls of the opening or, if on a vibrating screen, may actually be ejected.

Chance rules the approach of a particle to hole or imperforate surface and the probability that the lowermost point of the approaching particle will strike hole rather than screen fabric is proportional to the percentage of opening in the fabric. Chance coupled with the

relative dimensions of particle and opening rules in determining the passage of a particle presented to an opening. The problem may be stated in mathematical form as follows: If, in Fig. 1, the full-line square whose side is l represents a square screen aperture and the circle a spherical particle whose diameter is l/n (n being any number greater than l), then the probability of passage without touching the side of the aperture is proportional to the ratio of the area of the smaller square to the area of the larger, or $P = [(n - 1)/n]^2$ and the probability that the sphere will touch the side on presentation is $(1 - P)$. On the assumption that if the center of the sphere falls within the inner square in Fig. 1, it will surely pass, while if it falls without this square, it will fail to pass, the values of P for different values of l/n are measures of the ease of random passage of spherical particles of l/n diameter through l-sized square apertures, and $1/P$ gives the number of such apertures side by side that should be provided to insure passage. The first part of the assumption is true if l^2 is the area of the opening projected on a plane at right angles to the path of the particle; the second part must be modified in favor of passage, because although a particle presented with its center in the space between the squares will rebound in a direction and through a horizontal distance dependent upon the shape of the edge of the aperture, the angle of approach, the velocity of approach, and the shape of the particle, nevertheless some of the rebounding particles will fall with their centers within the inner square and pass. Unfortunately the number and nature of the qualifications that must be applied to this mathematical analysis in actual screening are such that no approach to a practical measure of capacity by a modification of it has yet been made. It is useful to indicate the probable effect on rate of screening of the ratio of particle size to aperture. To this extent Table 1, derived from the formula, is illuminating. It shows that as the particle size approaches that of the aperture the difficulty of passage becomes extremely great, even excluding all factors other than pure chance that militate against passage. Warner (*70 A 631*) gives the data summarized in Table 2 as the results of a test in which a sample of broken rock was screened on a standard 4.70-mm. testing sieve in a Ro-Tap shaker (Sec. 19, Art. 12), and the undersize products passed during the successive screening intervals were separately collected, weighed, and subjected to analysis on a 3.33-mm. screen. This work is qualitative confirmation of the theory, modified, however, by the practical elements of crowding, particle velocity, etc., as previously enumerated. The column headed "Increment per sec., grams >3.33-mm." holds the key to the operation from the point of view of screening rate. In the first three intervals the passage of even the smallest particles was interfered with by the mass of smaller material going through. By the time the fifth interval was reached most of the <3.33-mm. material had passed and by the end of this interval the bulk of the finer part of the >3.33-mm. material had also gone through. From that time there was a marked decrease in the rate of screening corresponding remarkably in order to the last four items in Table 1 and indicating that the material passing the screen in this part of the operation was of a size about 0.9-times the diameter of the screen opening and upward.

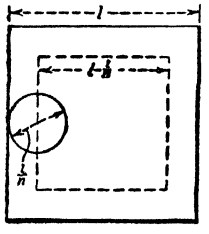

FIG. 1.

Table 1. Probabilities in screening

Size of grain, l/n-in.	Probable chance per 1,000 for unrestricted passage through l-in. square	Probable number of apertures in path of particle required to effect passage
0.001	998	1
0.01	980	2
0.1	810	2
0.2	640	2
0.3	490	2
0.4	360	3
0.5	250	4
0.6	140	7
0.7	82	12
0.8	40	25
0.9	9.8	100
0.95	2.0	500
0.99	0.1	10,000
0.999	0.001	1,000,000

An important condition affecting capacity in close sizing is the proportion of particles in the feed that are nearly the same size as the aperture. Undersize much smaller than the screen openings passes through very rapidly, so rapidly in fact that, if it is given free access to the holes, it goes through almost like water, and no normal variation in the amount of such material has any effect on screen capacity. Likewise particles much coarser than the openings, when sliding over a screening surface, have such large interstitial spaces in comparison with undersize particles that the latter pass down freely to the screen surface. But when the proportion of particles of a size near that of the screen aperture is large, these particles, which have interstitial spaces that are relatively small, hold back the fine material from the screen; the particles only slightly larger than the screen apertures wedge in and cause blinding, and those only slightly smaller than the aperture pass through with diffi-

Table 2. Time required to batch-screen material on 4.7-mm. gyrating screen (*after Warner*)

Total time	Total undersize, gm.			Undersize percentages							Increment per second		
				On 3.3-mm.			Through 3.3-mm.				Grams		
	On 3.3-mm.	Through 3.3-mm.	Total	Of total feed	Of total undersize	Of total material > 3.3-mm.	Of total feed	Of total undersize	Of total material through 3.3-mm.	Of total feed	> 3.3-mm.	< 3.3-mm.	Total
2 sec.	21.6	239.0	260.6	0.98	1.14	2.86	10.87	12.56	20.83	11.85	10.8	119.5	130.3
4 sec.	42.6	464.0	506.6	1.94	2.24	5.64	21.10	14.39	40.44	23.04	10.5	112.5	123.0
8 sec.	86.5	735.0	821.5	3.93	4.54	11.45	33.41	38.63	64.05	37.34	10.9	67.8	78.7
16 sec.	202.0	1,048.0	1,250.0	9.19	10.62	26.75	47.65	55.11	91.41	56.84	14.4	39.1	53.5
32 sec.	487.1	1,144.1	1,631.2	22.14	25.61	64.52	52.05	60.14	99.75	74.19	17.8	6.0	23.8
1 min.	606.2	1,147.1	1,753.3	27.56	31.87	80.30	52.19	60.34	100.00	79.75	8.5	0.2	8.7
2 min.	659.4	1,147.1	1,806.5	29.99	34.65	87.33	52.19	60.34	100.00	82.18	0.89	0	0.89
4 min.	682.4	1,147.1	1,829.5	31.04	35.87	90.35	52.19	60.34	100.00	83.23	0.19	0	0.19
8 min.	701.5	1,147.1	1,848.6	31.90	36.86	92.90	52.19	60.34	100.00	84.09	0.08	0	0.08
16 min.	714.4	1,147.1	1,861.5	32.50	37.55	94.65	52.19	60.34	100.00	84.69	0.03	0	0.03
32 min.	724.9	1,147.1	1,872.0	32.97	38.09	96.05	52.19	60.34	100.00	85.16	0.01	0	0.01
64 min.	738.4	1,147.1	1,885.5	33.58	38.83	97.80	52.19	60.34	100.00	85.77	0.007	0	0.007
128 min.	747.6	1,147.1	1,894.7	34.00	39.29	99.00	52.19	60.34	100.00	86.19	0.002	0	0.002
256 min.	755.0	1,147.1	1,902.1	34.33	39.68	100.00	52.19	60.34	100.00	86.52	0.001	0	0.001

Total sample 2,197.7 gm.

culty, therefore slowly. The result, as shown by Warner's work and the above theoretical analysis, is marked reduction in screen capacity. Experience has shown that this "critical" size ranges between approximately 50% larger and 25% smaller than the aperture.

The velocity and direction of approach of particles to the aperture have a marked effect on screening rate. If a spherical particle is traveling at a given rate along a screening surface whose apertures are several times the diameter of the particle, as in Fig. 2(*a*), its path upon leaving the support of the screen fabric will be somewhat as illustrated and the particle will pass through. With a smaller aperture the same particle will strike the far edge of the opening. If the particle were perfectly spherical and elastic and the aperture had square edges and vertical sides, it would also pass, as pictured in Fig. 2(*b*). But with irregular particles and with apertures having rounded edges and converging sides, there is every reason to expect that a particle following the path illustrated would fail to pass. If the initial approach of the particle is from above and at an angle to the screen surface as illustrated at (*1*) in Fig. 2(*c*), the direction of approach and high velocity both aid in passing it, if it strikes an opening, but if it fails to do so, as at (*2*), then high velocity, by causing it to bound, will tend to defer its opportunity to pass and thus decrease screening rate. Since the percentage of opening in screens is often less than 50, the evil effect of bounding may be expected to overbalance the good.

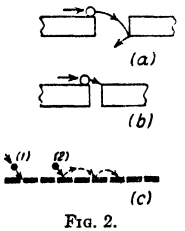

FIG. 2.

When, as in all practical screening operations, a mass of particles many grains deep is presented to a screen surface, coarse and fine grains are likely to be mixed indiscriminately, with the result that many oversize particles are in contact with the screen and many undersize particles are supported in the mass above and away from the screen surface. If the particles are frec to move among themselves, *i.e.*, if the material is not sticky, any subsequent movement of the mass will cause rearrangement. If the movement is sufficient to enliven the mass thoroughly without lifting it bodily from the screen, stratification occurs, with the finer particles at the bottom and the coarsest on top. Such stratification is essential to screening and is as much the purpose of the motion imparted to screening surfaces as are transport of oversize and prevention of blinding. Excessive movement, while it increases the ability of the screen to move material across its surface, defeats stratification and thereby decreases screen efficiency.

2. CAPACITY AND EFFICIENCY

Efficiency. Methods of reckoning screen efficiency are not uniformly established. A common method (UNDERSIZE RECOVERY) is to express it as the ratio of the weight of undersize obtained to the weight of undersize in the feed. This latter figure is determined by screening a feed sample on a hand screen of the same aperture as that of the screen under investigation, or by making a sizing test of the feed on the usual testing sieves, interpolating for the aperture of the operating screen and multiplying the percentage of undersize thus obtained by the tonnage treated. A similar measure is obtained by making screen analyses of representative samples of feed and oversize and applying the recovery formula (Sec. 19, Art. 24). Thus $E_1 = 100[100(e - v)/e(100 - v)]$ where e and v are percentages of undersize in feed and oversize respectively. On this basis efficiencies on well-operated vibrating screens will be 80 to 90% or slightly higher with screen apertures of $^1/_4$-in. or larger but will fall to 65 or 70% at 10-m. with normally low moisture content and will fall well below 60% with any material rise in moisture.

Warner criticizes the use of this formula on the basis of the experimental work shown in Table 2. He argues, correctly, that it does not take into consideration sufficiently the fact that 1-mm. material is readily passed through a 10-mm. screen while 9-mm. material passes the same screen with great difficulty, and suggests that the screen analysis of feed and of oversize concern itself only with the DIFFICULT GRAINS, which he defines for this purpose as those held on the next finer Tyler standard testing sieve whose aperture is less than 83% of the aperture of the screen under investigation. He then applies the recovery formula in the form $E_1 = U(F - O)/F(U - O)$, where F, U, and O are percentages of difficult grains in feed, undersize and oversize respectively. A. D. Sinden (*PC*) also emphasizes the desirability of basing efficiency calculations wholly upon the difficult grains, which he defines as those sized between 0.75 and 1.5 times the aperture; unless a screen is seriously overloaded, varying proportions of grain sizes outside this range have little effect on efficiency. He suggests the evaluation of undersize recovery by the formula $E_1 = 100[U - (ZC)]/U$, in which C = percentage of difficult grains in feed, U = percentage of true undersize in feed, and Z = decimal fraction of true undersize, based upon the difficult

grains only remaining in the oversize product (see p. 7-64). The above methods of calculation are best applicable to operations aiming at removal of oversize, as waste or for recrushing.

A second method (PERCENTAGE OF REMOVAL) calculates efficiency by dividing the percentage of true oversize in feed by the percentage of feed going into actual oversize product. Adopting Sinden's definitions (above) and letting O = percentage of true oversize in feed: $E_2 = 100[O/(O + ZC)]$. This method is most useful when the object of screening is to remove undesirable fines from a coarser product.

A third method, based on percentage of true undersize found in oversize product, more accurately defines the efficiency of a screen, as distinguished from the quality of its products. This is the system adopted by Allis-Chalmers engineers, efficiency being stated simply as 100 − percentage of true undersize in the coarse product. Accepting Sinden's restrictions to the difficult grains (above), $E_3 = 100[(C - ZC)/C] = 100(1 - Z)$.

Efficiency is markedly decreased by high feed rate, especially if accompanied by high percentages of oversize and difficult grains, because on a heavily loaded screen, fine material has difficulty in getting down to the screen surface and blinding is caused by wedging of particles into the screen openings on account of the weight of the bed.

Fig. 3, from A. D. Sinden (*PC*), illustrates how efficiency is affected both by overloading and by excessive proportion of difficult grains ranging, in this case (with 1/4-in. square-mesh screen), from 3/16- to 3/8-in. The two gravels were tested on a vibrating screen under identical operating conditions. Gravel *A*, containing about three times larger proportion of difficult grains, showed its maximum efficiency at a rate about one-third that of gravel *B*.

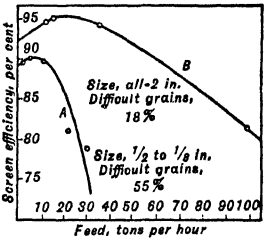

FIG. 3. Effects on screening efficiency of overloading and of difficult grains.

Effect of length of screen on efficiency is shown in Fig. 4, which compares the performance of three vibrating screens, identical except as to length, working on 1/8- to 3-in. gravel; width, 3 ft.; aperture, 1/2 in. square; slope, 17 1/2°; speed, 1,200 r.p.m.; amplitude, 0.154 in.

Feed factors affecting undersize recovery are: (*a*) the percentage of undersize; the less of this the lower the recovery; (*b*) the percentage of near-mesh or difficult grains; the more of this the lower the recovery; (*c*) the moisture content, the degree of stickiness caused by moisture, and the tendency of adhering coatings on the wire to build up; and (*d*) slabby or needlelike characteristics. Dry ore screens better if warm (100 to 150° F).

Capacity of a screen is the tonnage rate at which it performs satisfactorily the size separation demanded. This may be very different from the feed rate.

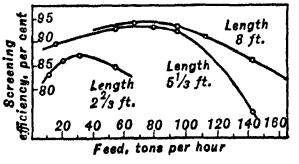

FIG. 4. Length *vs.* efficiency of vibrating screens (*after Sinden*).

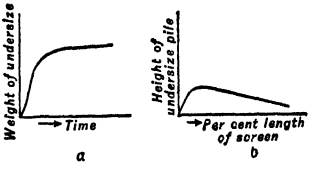

FIG. 5. Capacity curves.

Assume that substantially complete separation of a long-range product is desired at a size about 50% of the limiting size. The behavior of such material in screening may be followed in either of two ways: (*a*) by collecting and weighing the material passing through the meshes in short equal intervals of time from the beginning of screening, in which case a weight-time curve like Fig. 5, item *a*, is obtained; (*b*) by retaining the undersize physically in the place where it fell through the screen during an interval in which a given weight of material was fed at a uniform rate. A profile of such a mass of undersize is as shown in item *b*. Examination of the materials comprising the successive lots in case *a* and of those at different places along the heap in case *b* shows that the early-passing material in both cases is predominantly a mixture of all sizes up to about 70% of the size of the aperture and that the later-passing material grows progressively and slowly coarser with time.

Changes in rate of feed to the screen will not affect the curves materially so long as the material added or subtracted is larger than about 150% of the separating mesh. If the material added or subtracted is less than 70 to 75% of the separating aperture in size, the curves will steepen or flatten respectively in substantially direct proportion to the change. If the feed tonnage of difficult grains is changed the response of the curves is slow.

If the original material tested were bone dry and another test were made with somewhat over 3 or 4% of water added, the slope of the early part of curve *a* would fall, and the height and sharpness of the maximum of curve *b* would decrease. Within a range of moisture content, varying with the mineralogical character of the material, its maximum size, and size distribution, but with a top around 15 to 20% water, the presence of water decreases the rate of passage of undersize greatly. Further increase of water content first restores the passing rate quickly to that of bone-dry material, and thereafter the screening rate rises above that for dry material to an extent dependent upon the size of aperture.

Thus the true capacity of a screen is measured by its ability to pass difficult grains. It is simply a conveyor for EXCESS OVERSIZE (>1.5 times aperture), while EXCESS FINES (<0.7 times aperture) are as so much water.

For capacity ratings of different types of screens see the particular screens.

3. SCREENING SURFACES

The three general types of screening surface are: (*a*) woven wire or silk; (*b*) punched plate or sheet metal; (*c*) parallel bars, rods, or wires.

Screen-size designation. The minimum clear space between the edges of the opening in a screening surface is called the APERTURE OR SCREEN SIZE. Aperture is expressed in several ways; the most accurate, undoubtedly, is to give the dimension in inches or millimeters; the commonest, particularly with woven screens, is to express it as so many MESH, meaning the number of openings in the screen per linear inch. This latter method is definite only when coupled with a statement of the size of wire, or when referred to one of the testing-sieve scales (Sec. 19, Art. 12). When size of wire is given it should be expressed in ordinary units of measure, *i.e.*, inches or millimeters; if gage numbers are used the gage must be named, on account of the differences in dimensions corresponding to the same gage number in different gage scales. See Table 3. Given two of the quantities a = aperture, d = diameter of wire, and m = mesh, the percentage of opening, P, and the other quantity can be determined from the following relations (applying only to square-mesh screen):

$$P = a^2m^2 = \frac{a^2}{(a+d)^2} = (1 - md)^2;\ m = \frac{1}{a+d};\ a = \frac{1}{m} - d;\ d = \frac{1}{m} - a$$

The mesh of punched-plate screens does not mean the number of openings per linear inch but that the aperture has a dimension near that of some woven-wire screen of the stated mesh and usually of medium weight. If the largest and smallest apertures corresponding to a given mesh in Table 4 are averaged, the result will be close to the punched-plate aperture called by that mesh number. Certain districts, notably South Africa, express aperture as SQUARE MESH, *i.e.*, the number of apertures per square inch. Europeans, describing fine screens, commonly state the number of openings per square centimeter. NEEDLE MESH is a number used to designate an aperture and corresponds to that of a needle of the same or nearly the same diameter as the dimension of the opening. See Table 11.

Materials for screening surfaces include cast iron and steel, plain high- and low-carbon steels, manganese steel, chrome-nickel ("stainless") steel, brass, phosphor bronze, Monel metal, nickel, and occasionally other metals and alloys for special purposes; rubber-plated wire screens are available. Silk bolting cloth is used mainly in the preparation of graphite and abrasives, and for the finest sizes of testing screens. The screening surface must be strong enough to carry its load (a fine-wire screen is often reinforced by laying it on top of a coarser and stronger screen) and, so far as possible, it should resist abrasion and corrosion. At the same time it should be cheap. When corrosion is not a factor, screens are normally made of high-carbon steel and in certain cases of special alloy steels. Steel is stronger and resists abrasion better than any other material equally available. Cloth is advertised of wire with 450 Brinell and 225,000 lb. per sq. in. tensile strength. When corrosion must be resisted, iron, copper, bronze, Monel metal, and other alloys are used. Such materials cost more than steel initially and are not so highly resistant to abrasion. Their use is justified only when the final cost, by reason of their greater resistance to corrosion, is less than that of steel screens. Stainless steel is particularly suitable for wet screens since it is resistant to both corrosion and abrasion, and consequently blinds less readily.

Woven-wire screens are made with either square or rectangular openings, and in several different manners intended to prolong their life or prevent displacement of the wires in service. They are regularly obtainable in any length and in widths up to 5 ft.; greater widths are woven to order. Table 3 gives diameters of wires as gaged under various stand-

Table 3. Wire-gage numbers and corresponding wire diameters in inches

Number	Steel-wire gage or Washburn & Moen	Birmingham or Stubs	American or Brown & Sharpe	United States or U. S. Iron	Old English or London	Imperial or English standard
0000000	0.4900	.....	.....	0.500	.....	0.500
000000	0.4615	.....	0.5800	0.46875	.....	0.464
00000	0.4305	.....	0.5165	0.4375	.....	0.432
0000	0.3938	0.454	0.460	0.40625	0.454	0.400
000	0.3625	0.425	0.40964	0.375	0.425	0.372
00	0.331	0.380	0.36480	0.34375	0.380	0.348
0	0.3065	0.340	0.32486	0.3125	0.340	0.324
1	0.283	0.300	0.28930	0.28125	0.300	0.300
2	0.2625	0.284	0.25763	0.265625	0.284	0.276
3	0.2437	0.259	0.22942	0.25	0.259	0.252
4	0.2253	0.238	0.20431	0.234375	0.238	0.232
5	0.207	0.220	0.18194	0.21875	0.220	0.212
6	0.192	0.203	0.16202	0.203125	0.203	0.192
7	0.177	0.180	0.14428	0.1875	0.180	0.176
8	0.162	0.165	0.12849	0.171875	0.165	0.160
9	0.1483	0.148	0.11443	0.15625	0.148	0.144
10	0.135	0.134	0.10189	0.140625	0.134	0.128
11	0.1205	0.120	0.090742	0.125	0.120	0.116
12	0.1055	0.109	0.080808	0.109375	0.109	0.104
13	0.0915	0.095	0.071961	0.09375	0.095	0.092
14	0.080	0.083	0.064084	0.078125	0.083	0.080
15	0.072	0.072	0.057068	0.0703125	0.072	0.072
16	0.0625	0.065	0.05082	0.0625	0.065	0.064
17	0.054	0.058	0.045257	0.05625	0.058	0.056
18	0.0475	0.049	0.040303	0.05	0.049	0.048
19	0.041	0.042	0.03589	0.04375	0.040	0.040
20	0.0348	0.035	0.031961	0.0375	0.035	0.036
21	0.0317	0.032	0.028462	0.034375	0.0315	0.032
22	0.0286	0.028	0.025347	0.03125	0.0295	0.028
23	0.0258	0.025	0.022571	0.028125	0.027	0.024
24	0.023	0.022	0.0201	0.025	0.025	0.022
25	0.0204	0.020	0.0179	0.021875	0.023	0.020
26	0.0181	0.018	0.01594	0.01875	0.0205	0.018
27	0.0173	0.016	0.014195	0.0171875	0.01875	0.0164
28	0.0162	0.014	0.012641	0.015625	0.0165	0.0148
29	0.015	0.013	0.011257	0.0140625	0.0155	0.0136
30	0.014	0.012	0.010025	0.0125	0.01375	0.0124
31	0.0132	0.010	0.008928	0.010985	0.01225	0.0116
32	0.0128	0.009	0.00795	0.010456	0.01125	0.0108
33	0.0118	0.008	0.00708	0.009375	0.01025	0.0100
34	0.0104	0.007	0.006304	0.008594	0.0095	0.0092
35	0.0095	0.005	0.005614	0.0078125	0.009	0.0084
36	0.0090	0.004	0.005	0.0070313	0.0075	0.0076
37	0.0085	.....	0.004453	0.0066406	0.0065	0.0068
38	0.0080	.....	0.003965	0.00625	0.00575	0.0060
39	0.0075	.....	0.003531	.....	0.005	0.0052
40	0.0070	.....	0.003144	.....	0.0045	0.0048
41	0.0066	.....	0.0028	.....	.....	0.0044
42	0.0062	.....	0.002494	.....	.....	0.0040
43	0.0060	.....	0.002221	.....	.....	0.0036
44	0.0058	.....	0.001978	.....	.....	0.0032
45	0.0055	.....	0.001761	.....	.....	0.0028
46	0.0052	.....	0.001568	.....	.....	0.0024
47	0.0050	.....	0.001397	.....	.....	0.0020
48	0.0048	.....	0.001243	.....	.....	0.0016
49	0.0046	.....	0.001107	.....	.....	0.0012
50	0.0044	.....	0.000986	.....	.....	0.0010

ards. Table 4 gives dimensions of square-mesh steel-wire cloth corresponding to mesh designations and showing the possible range in aperture for a given mesh cloth of standard manufacture.

To determine aperture of intermediate screens within the ranges given in Table 4 proceed as follows: From Table 3 pick wire of a number included within the range of column 7 of Table 4; substitute the corresponding diameter in the equation $a = 1/m - d$ (p. 06).

Table 4. Mesh and aperture of steel-wire screens

Mesh designation	Range in opening		Range in diameter of wire used		Number of screens in range	Range of wire numbers employed *a*	Range in percentage of opening	Approximate weight, pounds per square foot
	In.	Mm.	In.	Mm.				
4-in. *H*	4.0	101.6	1.0 –0.375	25.4 –9.53	8	1-in.–000	64.0–83.4	17.5 –2.9
3 3/4-in. *H*	3.75	95.2	1.0 –0.3125	25.4 –7.95	9	1-in.–0	62.3–85.0	20.4 –2.2
3 1/2-in. *H*	3.5	88.8	1.0 –0.3125	25.4 –7.95	9	1-in.–0	60.5–84.1	21.8 –2.4
3 1/4-in. *H*	3.25	82.5	1.0 –0.3125	25.4 –7.95	9	1-in.–0	58.5–83.2	24.5 –2.5
3-in. *H*	3.0	76.2	1.0 –0.25	25.4 –6.35	10	1-in.–3	56.1–85.0	25.0 –1.8
2 3/4-in. *H*	2.75	69.8	1.0 –0.25	25.4 –6.35	10	1-in.–3	53.8–84.0	27.2 –1.9
2 1/2-in. *H*	2.5	63.5	1.0 –0.225	25.4 –5.72	11	1-in.–4	51.1–84.1	29.7 –1.7
2 1/4-in. *H*	2.25	57.2	1.0 –0.207	25.4 –5.26	12	1-in.–5	47.9–83.9	32.7 –1.6
2-in. *H*	2.0	50.8	1.0 –0.192	25.4 –4.88	13	1-in.–6	44.5–83.2	36.7 –1.5
1 3/4-in. *H*	1.75	44.4	1.0 –0.192	25.4 –4.88	13	1-in.–6	40.6–81.7	41.8 –1.8
1 1/2-in. *H*	1.5	38.1	1.0 –0.177	25.4 –4.50	14	1-in.–7	36.0–71.6	48.6 –1.7
1 1/4-in. *H*	1.25	31.8	0.75 –0.177	19.03 –4.50	13	3/4-in.–7	39.0–76.8	33.0 –2.1
1-in. *H*	1.0	25.4	0.75 –0.162	19.03 –4.12	14	3/4-in.–8	32.7–74.2	41.1 –2.1
1-in.	0.693–0.928	17.60–24.60	0.307 –0.072	7.81 –1.83	16	0–15	48.1–86.1	10 –0.5
7/8-in. *H*	0.875	22.2	0.625 –0.162	15.88 –4.12	12	5/8-in.–8	34.0–71.2	31.7 –2.4
3/4-in. *H*	0.75	19.03	0.625 –0.148	15.88 –3.76	13	5/8-in.–9	29.8–69.7	40.6 –2.4
3/4-in.	0.467–0.687	11.85–17.45	0.283 –0.063	7.19 –1.60	16	1–16	38.8–83.9	12 –0.5
5/8-in. *H*	0.625	15.88	0.5625–0.135	14.30 –3.43	13	9/16-in.–10	27.8–67.6	37.2 –2.3
5/8-in.	0.362–0.578	9.18–14.68	0.263 –0.047	6.68 –1.19	17	2–18	33.5–85.4	14 –0.3
1/2-in. *H*	0.5	12.69	0.4375–0.105	11.11 –2.67	13	7/16-in.–12	28.4–68.2	27.6 –1.7
7/16-in. *H*	0.4375	11.10	0.307 –0.105	7.81 –2.67	13	0–12	34.5–65.0	15.8 –2.0
2	0.275–0.459	6.98–11.67	0.225 –0.041	5.72 –1.04	16	4–19	30.2–84.2	13 –0.3
3/8-in. *H*	0.375	9.52	0.307 –0.105	7.81 –2.67	13	0–12	30.2–61.0	18.5 –2.2
5/16-in. *H*	0.3125	7.93	0.225 –0.105	5.72 –2.67	9	4–12	33.8–56.0	11.7 –2.8
1/4-in. *H*	0.25	6.35	0.225 –0.092	5.72 –2.34	10	4–13	27.6–53.4	14.7 –2.5
2 1/2	0.208–0.365	5.28–9.27	0.192 –0.035	4.88 –0.89	15	6–20	27.0–83.2	13 –0.3
3/16-in. *H*	0.1875	4.76	0.192 –0.092	4.88 –2.34	8	6–13	24.4–45.0	14.4 –3.3

3	0.171 –0.301	4.34 –7.65	0.162 –0.032	4.12 –0.81	14	8–21	26.4–81.7	9 –0.3
3 1/2	0.138 –0.254	3.51 –6.45	0.148 –0.032	3.76 –0.81	13	9–21	23.3–78.8	12 –0.3
4	0.115 –0.222	2.92 –5.64	0.135 –0.028	3.43 –0.71	13	10–22	21.1–78.8	12 –0.3
4 1/2	0.102 –0.197	2.59 –5.00	0.120 –0.025	3.05 –0.64	12	11–23	21.1–78.8	10 –0.25
5	0.095 –0.177	2.41 –4.50	0.105 –0.023	2.67 –0.56	13	12–24	22.5–78.3	8.5 –0.24
6	0.075 –0.147	1.90 –3.74	0.092 –0.020	2.34 –0.51	13	13–25	20.2–77.3	8.5 –0.22
7	0.063 –0.125	1.60 –3.18	0.080 –0.018	2.03 –0.46	13	14–26	19.4–76.3	7.5 –0.21
8	0.053 –0.108	1.35 –2.74	0.072 –0.017	1.83 –0.43	13	15–27	18.0–74.6	7.1 –0.22
9	0.048 –0.095	1.22 –2.41	0.063 –0.016	1.60 –0.41	13	16–28	18.8–73.2	6.2 –0.22
10	0.046 –0.085	1.17 –2.16	0.054 –0.015	1.37 –0.38	13	17–29	21.1–72.1	4.7 –0.21
12	0.036 –0.069	0.915–1.75	0.047 –0.014	1.19 –0.36	13	18–30	19.0–69.2	4.6 –0.21
14	0.030 –0.0606	0.712–1.54	0.041 –0.0104	1.04 –0.26	16	19–34	18.2–73.0	4.3 –0.15
16	0.0215–0.0530	0.546–1.35	0.041 –0.0095	1.04 –0.24	17	19–35	11.8–72.0	6.2 –0.13
18	0.0206–0.0466	0.523–1.18	0.035 –0.0090	0.89 –0.228	17	20–36	13.7–70.2	4.5 –0.13
20	0.0220–0.0410	0.558–1.04	0.028 –0.0090	0.71 –0.228	15	22–36	19.4–67.2	2.7 –0.15
22	0.0175–0.0365	0.445–0.926	0.028 –0.0090	0.71 –0.228	15	22–36	14.8–64.2	3.5 –0.17
24	0.0187–0.0327	0.475–0.830	0.023 –0.0090	0.56 –0.228	13	24–36	20.0–61.4	2.1 –0.19
26	0.0205–0.0295	0.521–0.749	0.018 –0.0090	0.46 –0.228	11	26–36	28.3–58.7	1.1 –0.20
28	0.0187–0.0267	0.475–0.678	0.017 –0.0090	0.43 –0.228	10	27–36	27.5–56.0	1.1 –0.22
30	0.0163–0.0243	0.414–0.617	0.017 –0.0090	0.43 –0.228	10	27–36	24.0–53.2	1.3 –0.24
32	0.0153–0.0223	0.388–0.567	0.016 –0.0090	0.41 –0.228	9	28–36	23.9–50.8	1.3 –0.26
35	0.0126–0.0196	0.320–0.497	0.016 –0.0090	0.41 –0.228	9	28–36	19.4–46.8	1.6 –0.28
38	0.0123–0.0168	0.312–0.427	0.014 –0.0085	0.36 –0.216	6	30–35	21.9–40.8	1.2 –0.31
40	0.0118–0.0165	0.300–0.419	0.0132–0.0085	0.34 –0.216	7	31–37	22.3–43.5	1.1 –0.31
45	0.0094–0.0137	0.238–0.348	0.0128–0.0085	0.32 –0.216	6	32–37	18.0–38.2	1.2 –0.38
50	0.0096–0.0120	0.244–0.305	0.0104–0.0080	0.26 –0.203	5	34–38	23.0–36.0	0.85–0.36
55	0.0087–0.0102	0.221–0.259	0.0095–0.0080	0.24 –0.203	4	35–38	22.8–31.3	0.77–0.42
60	0.0072–0.0092	0.183–0.234	0.0095–0.0075	0.24 –0.190	5	35–39	18.5–30.2	0.93–0.49
64	0.0071–0.0081	0.180–0.206	0.0085–0.0075	0.216–0.190	3	37–39	20.8–27.0	0.74–0.57
70	0.0058–0.0068	0.147–0.172	0.0085–0.0075	0.216–0.190	3	37–39	16.4–22.6	0.93–0.68
74	0.0060–0.0065	0.152–0.165	0.0075–0.0070	0.190–0.178	2	39–40	19.8–23.2	0.79–0.59
80	0.0055–0.0059	0.140–0.150	0.0070–0.0066	0.178–0.167	2	40–41	19.4–22.3	0.68–0.49
90	0.0049	0.124	0.0062	0.157	1	42	19.6	0.59

a Washburn & Moen gage, see Table 3.

H Heavy.

Table 5 gives specifications for square-mesh screens recommended by the Division of Simplified Practices, U. S. Dept. of Commerce, for the screening of mineral aggregates; heavy wire is recommended for trommels, medium-heavy for high-speed vibrating and

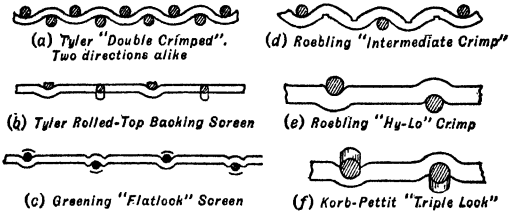

FIG. 6. Typical square-mesh screen weaves.

shaking screens, medium and medium-light for other vibrating screens. Table 6 gives similar recommendations by the British Engineering Standards Association for industrial screens. In practically all woven-wire screens used in mineral dressing, both warp and

Table 5. Screen specifications recommended by U. S. Dept. of Commerce

Aperture, inches	Medium light		Medium		Medium heavy		Heavy	
	Wire diam., inch	Per cent. opening	Wire diam., inch	Per cent. opening	Wire diam., inch	Per cent. opening	Wire diam., inch	Per cent. opening
3	0.4375	76.2	0.500	73.5	0.625	68.5	0.750	64.0
2.75	0.375	77.4	0.4375	74.4	0.500	71.6	0.625	66.4
2.5	0.375	75.6	0.4375	72.4	0.500	69.4	0.625	64.0
2.25	0.375	73.4	0.4375	70.1	0.500	66.9	0.625	61.2
2	0.3125	74.8	0.375	70.9	0.4375	67.3	0.500	64.0
1.75	0.3125	71.9	0.375	67.8	0.4375	64.0	0.500	60.5
1.5	0.250	73.4	0.3125	68.5	0.375	64.0	0.4375	59.9
1.25	0.250	69.4	0.3125	64.0	0.375	59.2	0.4375	54.8
1.125	0.225	69.6	0.250	67.0	0.3125	61.0	0.375	55.7
1	0.225	66.6	0.250	64.0	0.3125	58.0	0.375	52.9
7/8	0.207	65.3	0.225	63.3	0.250	60.5	0.3125	54.3
3/4	0.192	63.4	0.207	61.4	0.250	56.3	0.3125	49.8
5/8	0.177	60.7	0.192	58.5	0.225	54.0	0.250	51.0
1/2	0.162	57.1	0.177	54.5	0.192	52.2	0.207	49.8
7/16	0.148	55.8	0.162	53.2	0.177	50.7	0.192	48.3
3/8	0.135	54.1	0.148	51.4	0.162	48.7	0.177	46.1
5/16	0.120	52.2	0.135	48.8	0.148	46.0	0.162	43.4
1/4	0.105	49.6	0.120	45.6	0.135	42.2	0.148	39.4
3/16	0.080	49.1	0.092	45.1	0.120	37.2	0.135	33.8
1/8	0.054	48.7	0.072	40.2	0.092	33.4	0.105	29.5

Mesh	Light			Medium			Heavy		
	Wire diam., inch	Opening, inch	Per cent. opening	Wire diam., inch	Opening, inch	Per cent. opening	Wire diam., inch	Opening, inch	Per cent. opening
5	0.063	0.137	46.9	0.080	0.120	36.0	0.092	0.108	29.2
6	0.054	0.113	46.0	0.063	0.104	38.9	0.072	0.095	32.5
7	0.047	0.096	45.2	0.054	0.089	38.8	0.063	0.080	31.4
8	0.041	0.084	45.2	0.047	0.078	38.9	0.054	0.071	32.3
10	0.032	0.068	46.2	0.035	0.065	42.3	0.047	0.053	28.1
12	0.028	0.055	43.6	0.032	0.051	37.5	0.041	0.042	25.4
14	0.025	0.046	41.5	0.028	0.043	36.2	0.035	0.036	25.4
16	0.023	0.0395	39.9	0.025	0.0375	36.0	0.032	0.0305	23.8
18	0.020	0.0356	41.1	0.023	0.0326	34.4	0.028	0.0276	24.7
20	0.018	0.032	41.0	0.020	0.030	36.0	0.025	0.025	25.0
22	0.017	0.0285	39.3	0.020	0.0255	31.5	0.023	0.0225	24.5
24	0.016	0.0257	38.0	0.018	0.0237	32.4	0.020	0.0217	27.1
26	0.015	0.0245	37.3	0.017	0.0215	31.2	0.018	0.0205	28.4
28	0.0135	0.0222	38.6	0.016	0.0197	30.4	0.017	0.0187	27.4
30	0.0135	0.0198	35.3	0.015	0.0183	30.1	0.016	0.0173	26.9
32	0.013	0.0183	34.3	0.014	0.0173	30.6	0.015	0.0163	27.2
35	0.011	0.0176	37.9	0.0135	0.0151	27.9	0.015	0.0136	22.7

shoot wires are crimped to prevent distortion under impact of the load. Fig. 6 shows six typical methods. When a flat-surfaced screen is desired, as for reinforcement under a fine-wire screen, or to prolong life by eliminating upstanding knuckles, a screen may be rolled after it is woven, or a special form of weave may be adopted. Single-crimp wire has been used on a revolving screen on a dredge to prevent blinding.

Table 6. British Engineering Standard specifications (No. 481–1933) for industrial screens

Clear mesh woven-wire screen

Aperture, inches	Wire diameter		Open area, per cent.	Aperture, inches	Wire diameter		Open area, per cent.
	S.W.G.	In.			S.W.G.	In.	
4	.....	1/2	79.0	7/8	3	0.252	60.3
4	.....	3/8	83.6	7/8	6	0.192	67.2
3 1/2	.....	1/2	76.6	7/8	8	0.160	71.5
3 1/2	.....	3/8	81.6	3/4	3	0.252	56.0
3	.....	3/8	79.0	3/4	6	0.192	63.4
3	.....	5/16	82.0	3/4	8	0.160	67.9
2 1/2	.....	3/8	75.6	3/4	10	0.128	73.0
2 1/2	.....	5/16	79.0	5/8	6	0.192	58.5
2	.....	3/8	70.9	5/8	8	0.160	63.4
2	1	0.300	75.6	5/8	10	0.128	68.9
2	3	0.252	78.9	1/2	6	0.192	52.2
1 3/4	1	0.300	72.9	1/2	8	0.160	57.4
1 3/4	3	0.252	76.4	1/2	10	0.128	63.4
1 3/4	6	0.192	81.2	3/8	10	0.128	55.6
1 1/2	1	0.300	69.4	3/8	12	0.104	61.3
1 1/2	3	0.252	73.3	3/8	14	0.080	67.9
1 1/2	6	0.192	78.6	1/4	12	0.104	49.9
1 1/4	1	0.300	65.0	1/4	14	0.080	57.4
1 1/4	3	0.252	69.3	1/4	16	0.064	63.4
1 1/4	6	0.192	75.1	3/16	10	0.128	35.3
1	3	0.252	63.8	3/16	12	0.104	41.4
1	6	0.192	70.4	3/16	14	0.080	49.1
1	8	0.160	74.3	1/8	12	0.104	29.8
				1/8	14	0.080	37.2

Woven-wire cloth

Aperture, inch	Mesh, per in.	Wire diameter		Open area, per cent.	Aperture, inch	Mesh, per in.	Wire diameter		Open area, per cent.
		S.W.G.	In.				S.W.G.	In.	
0.202	4	18	0.048	65.3	0.0178	36	33	0.0100	41.0
0.186	4	16	0.064	55.4	0.0217	30	31	0.0116	42.5
0.160	5	19	0.040	64.0	0.0120	50	35 1/2	0.0080	36.0
0.144	5	17	0.056	51.8	0.0158	40	34	0.0092	39.9
0.131	6	20	0.036	61.5	0.0083	70	38	0.0060	33.7
0.119	6	18	0.048	50.8	0.0097	60	37	0.0068	34.6
0.097	8	22	0.028	60.2	0.0063	90	40	0.0048	32.2
0.085	8	19	0.040	46.2	0.0073	80	39	0.0052	34.1
0.078	10	24	0.022	60.8	0.0047	120	43	0.0036	32.1
0.068	10	21	0.032	46.2	0.0056	100	41	0.0044	31.4
0.063	12	25	0.020	57.6	0.0041	140	44 1/2	0.0030	33.3
0.055	12	22	0.028	43.9	0.0036	160	45 1/2	0.0026	33.7
0.053	14	26	0.018	55.7	0.0033	180	46 1/2	0.0022	36.0
0.0461	16	27	0.0164	54.4	0.0030	200	47	0.0020	36.0
0.0352	20	28	0.0148	49.6	0.0026	240	48	0.0016	38.3
0.0281	24	29	0.0136	45.4	0.0021	300	49	0.0012	40.5

S.W.G. = English standard wire gage in Table 3.

Flatlock screen (*53 CMJ 360; 54 ibid. 387*) has alternate crimps in each wire to a depth equal to its full diameter; at intervening intersections, a wire has two shallow crimps, one on each side of the crossing wire (Fig. 6, *c*). Thus, every even-numbered warp wire is rigidly locked in a deep groove of even-numbered shoot wires; odd-numbered warp wires similarly by odd-numbered shoot wires. This results in an almost flat surface on one side, with practically all the roughness on the other. Owing to the equalised distribution of wear, this screen retains its mesh accurately until practically worn through. In elongated meshes, only the warp wires have the Flatlock crimp.

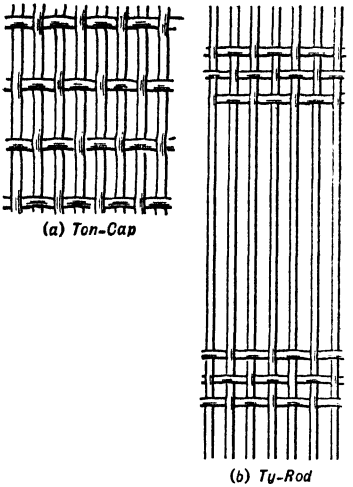

(a) Ton-Cap (b) Ty-Rod

FIG. 7. Elongated-mesh woven-wire screens.

Woven-wire screens with elongated openings have been widely adopted for two principal reasons: (*a*) to compensate for the loss of effective aperture size (and proportion of open area) occasioned when a square-mesh screen is set on a slope, or installed on a horizontal shaking or vibrating screen having a motion oblique to the surface; (*b*) to increase screening capacity, especially with wet or sticky ores, when close precision of sizing is unnecessary. The long dimension of the aperture may be parallel to or across the direction of flow; the former arrangement may afford the larger capacity and is the more suitable for damp material; in the latter position, a screen blinds less and has somewhat longer life and higher efficiency. Warp and shoot wires may have the same or different diameters; in the latter case, the shoot wire is the larger.

Ton-Cap screen (Fig. 7, *a*) has elongated rectangular openings, of which the length is (approx.) 3 1/2 to 4 times the width. Standard widths of opening range from 0.919 to 0.007 in. in about 36 steps. Percentage of open area ranges from 21.1 in extra heavy screen of the smallest

Table 7. Specifications of Ton-Cap screen (*W. S. Tyler Co.*)

Extra heavy		Heavy		Medium		Medium light		Light	
Width of aperture, in.	Ton-Cap No.	Width of aperture, in.	Ton-Cap No.	Width of aperture, in.	Ton-Cap No.	Width of aperture, in.	Ton-Cap No.	Width of aperture, in.	Ton-Cap No.
0.919	1013	0.913	5115	0.899	1377	0.895	1226	0.896	1927
0.788	1986	0.781	5120	0.781	2145	0.771	1098	0.768	493
0.663	2089	0.651	5125	0.647	1051	0.646	450	0.641	1023
0.531	1955	0.524	5133	0.521	1009	0.519	1255	0.515	1726
0.464	1707	0.460	5135	0.457	456	0.455	475	0.452	1247
0.399	875	0.396	5140	0.394	879	0.393	963	0.389	1061
0.335	2078	0.342	5145	0.330	1308	0.329	1210	0.326	1117
0.259	892	0.256	5153	0.268	5	0.265	1017	0.262	1195
0.229	890	0.232	5156	.....	.....	0.227	394	0.226	1024
0.206	992	0.202	5160	0.202	704	0.193	407	0.196	1004
0.176	1182	0.175	5165	0.174	1340	0.179	872	0.179	2504
0.166	605	.....	.....	0.157	412	0.151	767	0.158	771
0.146	1064	0.144	5170	0.141	770	.....	.....	0.144	621
.....	.....	.....	.....	.....	.....	0.136	1196	0.134	1003
0.130	23	0.123	5175	0.129	514	0.129	622	0.126	736
0.116	226	0.119	5178	0.111	732	0.111	665	0.106	757
0.104	2290	0.101	5180	0.103	661	0.098	599	0.095	557
0.089	368	.....	.....	0.090	755	0.085	930	0.089	239
.....	.....	0.083	5185	0.079	38	0.077	556	0.084	920
0.072	40	0.069	5190	0.069	44	0.070	740	0.070	805
0.063	921	.....	.....	0.063	49	0.064	302	.....	.....
0.061	241	0.059	5195	0.057	835	0.059	566	0.060	823
0.054	554	0.052	5200	0.050	309	0.055	305	0.049	588
0.044	57	.....	.....	0.044	908	0.047	833	0.045	359
0.039	813	0.041	5205	0.041	365	0.041	277	0.039	817
0.035	321	0.035	5210	0.036	355	0.036	819	0.034	617
0.031	371	0.030	5215	0.032	89	0.032	95	0.031	795
0.028	853	0.028	5218	0.029	614	0.031	520	0.029	636
0.025	919	0.025	5220	0.024	423	0.026	422	0.025	538
0.023	615	0.022	5225	0.022	865	0.021	433	0.023	434
0.020	318	.....	.....	0.020	533	.....	.....	0.020	494
0.019	527	0.019	5230	.....	.....	0.019	152	.....	.....
0.017	332	.....	.....	0.018	138	0.017	166	0.017	164
.....	.....	0.016	5234	.....	.....	0.016	162	0.016	775
0.015	531	0.015	5235	0.015	155	0.015	170	.....	.....
0.014	165	0.013	5240	.....	.....	0.014	176	.....	.....
0.012	159	0.011	5245	.....	.....	0.012	182	0.011	2688
0.009	184	0.009	2475	0.010	190	.....	.....	.....	.....
0.007	2602	.....	.....	.....	.....	.....	.....	.....	.....

aperture to 74.2 in light-weight screen with the largest aperture; for intermediate sizes and weights, open area averages about 45 to 55%. In ALASKA-JUNEAU mill, a 35-mesh stainless-steel Ton-Cap screen in a closed grinding circuit has a life equivalent to 50,000 tons. Table 7 shows standard sizes and numbers.

Ty-Rod screen. The rectangular openings are still further elongated, to as much as 25 times their width. Longitudinal wires, spaced as in Table 7*a*, are tied at regular intervals by groups of three cross wires (Fig. 7, *b*); the screen is fabricated with long dimension of aperture parallel with or normal to length of cloth. Table 7*a* gives data on standard sizes.

Table 7*a*. Specifications of Ty-Rod screens (*W. S. Tyler Co.*)

Heavy		Medium heavy		Standard		Medium light	
Width of aperture, in.	Wire diam., in.	Width of aperture, in.	Wire diam., in.	Width of aperture, in.	Wire diam., in.	Width of aperture, in.	Wire diam., in.
.....	.....	2.	0.625	2.	0.500	2.	0.375
1.75	0.625	1.75	0.5	1.75	0.375	1.75	0.3125
1.5	0.5	1.5	0.375	1.5	0.3125	1.5	0.25
1.25	0.5	1.25	0.375	1.25	0.3125	1.25	0.25
1.	0.375	1.	0.3125	1.	0.25	1.	0.225
0.875	0.3125	0.875	0.25	0.875	0.225	0.875	0.207
0.75	0.25	0.75	0.225	0.75	0.207	0.75	0.192
0.625	0.25	0.625	0.225	0.625	0.192	0.625	0.177
0.5625	0.225	0.5625	0.207	0.5625	0.177	0.5625	0.162
0.5	0.207	0.5	0.192	0.5	0.177	0.5	0.162
0.4375	0.192	0.4375	0.177	0.4375	0.162	0.4375	0.148
0.375	0.177	0.375	0.162	0.375	0.148	0.375	0.135
0.3125	0.162	0.3125	0.148	0.3125	0.135	0.3125	0.120
0.25	0.148	0.25	0.135	0.25	0.120	0.25	0.105
0.216	0.148	0.213	0.120	0.228	0.105	0.216	0.092
0.1875	0.135	0.1875	0.120	0.1875	0.092	0.187	0.080
0.173	0.135	.....	.....	0.17	0.080	.....	.....
0.166	0.120	0.162	0.105	.....	.....	.....	.....
.....	.....	0.156	0.105	0.156	0.080	0.156	0.072
0.147	0.120	0.145	0.105	0.142	0.080	.....	.....
.....	.....	.....	.....	.....	.....	0.137	0.063
0.125	0.105	0.125	0.092	0.125	0.072	0.125	0.054
0.108	0.092	0.102	0.080	0.104	0.063	0.1	0.054
0.09	0.092	0.087	0.080	0.095	0.072	0.091	0.063
.....	.....	0.082	0.072	0.08	0.063	0.079	0.054
0.074	0.080	.....	.....	.....	.....	.....	.....
.....	.....	0.07	0.063	0.071	0.054	0.071	0.047
0.063	0.080	.....	.....	0.064	0.054	0.064	0.047
0.061	0.072	0.062	0.063	0.058	0.047	0.059	0.041
0.055	0.063	0.057	0.054	0.053	0.047	.....	.....
0.048	0.063	0.051	0.054	0.05	0.041	0.048	0.035
0.046	0.054	0.044	0.047	.....	.....	0.043	0.028
.....	.....	0.042	0.041	0.042	0.035	.....	.....
0.036	0.047	0.036	0.041	0.036	0.035	0.035	0.028
0.03	0.041	0.032	0.035	.....	.....	0.028	0.028
0.026	0.041	0.0275	0.035	0.024	0.032	.....	.....
0.0215	0.041	0.0206	0.035	0.022	0.028	.....	.....

Choice of woven-wire screen compromises sharpness of separation with capacity and freedom from blinding. Square apertures give the sharpest separation, but they lose more in effective aperture and capacity from inclination. Rectangular screen with a relatively small ratio of length to width increases capacity with but little sacrifice of sharpness with rounded grains and is principally used for such material in the size range from $^1/_2$-in. to 65-m. An increased capacity of 30 to 40% can be expected with such material by use of rectangular openings. The advantage of the rectangular mesh largely disappears at apertures above $^1/_2$-in. Square mesh should be used for slabby material. Rectangular mesh with a large length-width ratio is desirable for finger- or needlelike grains or where moisture or clay tend to cause blinding.

Rectangular-mesh cloth is usually set crosswise in order to give greater metal cross-section in line with the usual transverse stretch on vibrating screens, but it is set longitudinally when blinding is for any reason excessive.

W. S. Tyler Co. reports that when screening clayey gravel on $^3/_{16}$-in. aperture Ty-Rod screen blinded when set transversely and that a 6×14-ft. screen, $^3/_{16}$-in. aperture, failed to handle 600 tons per hr. The work was improved by turning the screen cloth, but then the cloth broke at 800 r.p.m. over the

6-ft. span. Finally, by substituting 1/8×1/2-in. soft-steel strip for the center shoot wire, life was increased from 1 week to 1 or 2 mo.

Sectional coverings. When the structure of the screening apparatus permits, it is wise to divide the covering into sections. This permits choosing heavier wire for the head section, which both increases the period between changes and distributes the load.

Punched-metal screens are available in plain and alloy steels (also various nonferrous metals and alloys) punched in the following manners (Fig. 8): (*1*) round, staggered; (*a*); (*2*) square, straight rows (*b*), staggered rows (*c*); (*3*) slotted, hit-and-miss sideways (*d*),

Table 8. Specifications for punched-plate screen (*Allis-Chalmers Mfg. Co.*)

[Incomplete list, particularly as to round-hole screens]

Aperture		Round-hole, staggered @ 60°			Square-hole, straight or staggered		
Inches	Mm.	Bar, in.	Per cent. opening	Thickness *a*	Bar, in.	Per cent. opening	Thickness *a*
0.0295	0.75	0.03125	21.25	24	.....	.....	.....
0.0394	1.00	0.03125	28	22	.....	.....	.....
0.0469	1.191	0.0469	22.5	20	.....	.....	.....
0.0625	1.588	0.0469	29.75	26	0.0625	25	18
0.0781	1.984	0.0625	27.75	18	.....	.....	.....
0.0787	2	0.0625	28	18	0.1406	12.75	16
0.1181	3	0.0625	38.75	26	.....	.....	.....
0.1250	3.175	0.0938	29.5	14	0.1250	25	12
0.1563	3.969	0.0625	46.5	22	0.1875	20.5	14
0.1575	4	0.0938	35.5	10	0.0938	39.25	14
0.1875	4.763	0.0625	51	26	0.125	36	10
0.1969	5	0.0938	41.25	14	.....	.....	.....
0.25	6.350	0.0938	47.75	24	0.125	44.5	10
0.2756	7	0.1563	36.75	3/16	0.1875	35.25	3/16
0.3125	7.938	0.125	46.25	10	0.125	51	10
0.375	9.525	0.125	51	26	0.125	56.25	10
0.4375	11.113	0.1875	44.25	3/16	0.125	60.5	10
0.50	12.7	0.1875	48	14	0.1563	58	10
0.625	15.875	0.25	47	10	0.1875	59	3/16
0.75	19.05	0.375	40	1/2	0.1875	64	3/16
0.875	22.225	0.25	55	26	0.25	60.5	1/4
1.00	25.4	0.25 *b*	58	3/8	0.25	64	1/4
1.25	31.75	0.50 *b*	46.25	1/2	0.25 *b*	69	1/4
1.50	38.1	0.50 *b*	51	1/2	0.375 *b*	64	1/4
1.75	44.45	0.50 *b*	54.75	3/8	0.375 *b*	68	5/16
2.00	50.8	0.50 *b*	58	1/2	0.50 *b*	64	5/16
2.25	57.15	*b*	.....	3/4	0.50 *b*	67	3/8
2.50	63.5	*b*	.....	3/4	0.50 *b*	69.5	3/8
2.75	69.85	*b*	.....	3/4	0.50 *b*	71.5	3/8
3	76.2	*b*	.....	3/4	0.50 *b*	73.5	3/8
3.25	82.55	*b*	.....	3/4	0.625 *b*	70.5	1/2
3.50	88.9	*b*	.....	3/4	0.75 *b*	68	1/2
3.75	95.25	*b*	.....	3/4	0.75 *b*	69.5	1/2
4	101.6	*b*	.....	3/4	0.75 *b*	71	5/8
4.5	114.3	*b*	.....	1/2	0.75 *b*	74	5/8
5 *c*	127	*b*	.....	1/2	.....	.....	.....

a Maximum thickness; gage numbers are U. S. Std.
b Obtainable at any wider spacing, with corresponding increase in permissible thickness of plate.
c Round-hole perforations are obtainable up to 8 1/2 in.

hit-and-miss endways (*e*), diagonal (*f*, *g*), straight parallel rows (*h*), all full-open or burred. Punched metal has the following advantages as compared with woven wire: more evenly distributed wear, hence longer life; less tendency to blind, owing to sharp edges and downward diverging walls of the aperture; on vibrating screens, the smoother surface permits a reduction in the slope (and headroom) required to discharge oversize at a given rate, or on horizontal shaking screens it accelerates the rate of travel; the smooth surface probably also causes less interference with stratification of fine particles in contact with the screen surface, thereby promoting efficiency of separation; in some cases, demanding accurate sizing, the round holes obtainable only in punched metal may be advantageous. Punched metal, however, is limited to apertures 0.75 mm. and coarser for round or square holes; clear slotted screens are obtainable down to 0.30-mm. width of opening.

The chief drawback with punched metal heretofore has been its low percentage of open area; this still applies to fine slotted screen, but improved manufacturing methods now produce round- or square-punched sheet with open areas corresponding to those of medium to medium-heavy woven-wire screen with the same apertures and spacings. Table 8 compares the open areas of round- and square-punched sheet made by an American manufacturer; in each case, the bar or bridge between openings is the small-

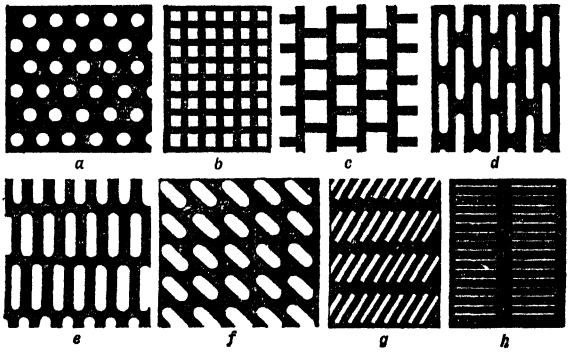

FIG. 8. Types of punched-plate screens.

est of several adopted for that size of hole; gage numbers are U. S. Standard, Table 3. Table 9 gives the British standard specifications for plate punched with round holes staggered at 60°. Table 10 gives standard openings for diagonal-slotted, and Table 11 those for needle-slotted screens of an American manufacturer.

Table 9. British Engineering Standard specifications (No. 481–1933) for punched-plate screens

[Round holes staggered at 60°]

Hole diam., in.	Pitch, c-c., in.	Max. thickness, in. *a*	Open area, %	Hole diam., in.	Pitch, c-c., in.	Max. thickness, in. *a*	Open area, %
			Heavy series				
3	3 3/4	3/8	58.5	5/8	15/16	3/8	40.5
2 3/4	3 1/2	3/8	55.0	1/2	3/4	3/8	40.5
2 1/2	3 1/4	3/8	54.0	7/16	11/16	1/4	36.75
2 1/4	3	3/8	51.0	3/8	3/4	3/8	22.5
2	2 3/4	3/8	48.0	3/8	5/8	1/4	32.75
1 3/4	2 7/16	3/8	47.5	5/16	5/8	5/16	22.5
1 5/8	2 1/4	3/8	47.5	5/16	1/2	1/4	35.5
1 1/2	2 1/8	3/8	40.5	1/4	1/2	1/4	22.5
1 3/8	2	3/8	44.5	1/4	7/16	3/16	29.75
1 1/4	1 7/8	3/8	40.5	3/16	3/8	3/16	22.5
1 1/8	1 5/8	3/8	44.75	3/16	5/16	1/8	32.75
1	1 1/2	3/8	40.5	1/8	1/4	1/8	22.5
7/8	1 5/16	3/8	40.5	3/32	3/16	3/32	22.5
3/4	1 1/8	3/8	40.5	1/16	1/8	1/16	22.5
			Light series				
1	1 3/8	0.080	47.5	0.090	0.140	0.048	38.0
7/8	1 1/8	0.080	55.0	0.085	0.140	0.036	33.5
3/4	1	0.080	51.0	0.077	0.121	0.036	37.0
5/8	7/8	0.080	46.0	0.069	0.106	0.028	37.0
1/2	5/8	0.080	58.0	0.058	0.093	0.028	36.0
7/16	9/16	0.080	55.0	0.050	0.081	0.022	34.5
3/8	1/2	0.080	51.0	0.045	0.073	0.022	34.5
5/16	7/16	0.080	46.0	0.041	0.068	0.018	33.0
1/4	3/8	0.080	40.0	0.037	0.062	0.018	32.5
3/16	9/32	0.080	40.0	0.034	0.066	0.018	24.0
5/32	1/4	0.064	35.5	0.029	0.059	0.018	22.0
1/8	7/32	0.064	30.0				

a As usually manufactured in steel.

Lip screen is a form of punched plate with slotted openings diverging in the direction of flow, the plate being bent downward near the lower end of each row of slots to form a drop in the general screen surface. The result is that particles that tend to wedge in the slots are pushed down to the bend and there readily freed. This type of screen is often used for coal screening; it is thought to cause less breakage and abrasion than any other type.

Table 10. Standard diagonal slots
(*Allis-Chalmers Mfg. Co.*)

Size, in.	Width, mm.	Bar, in.	Max. gage	Per cent. opening
3/64 × 1/2	1.191	1/8	26	21.0
3/64 × 1/2	1.191	3/32	18	27.0
1/10 × 3/8	2.540	1/8	16	31.4
7/64 × 3/8	2.778	5/32	14	29.1
1/8 × 3/8	3.175	5/32	14	29.1
1/8 × 1/2	3.175	5/32	12	32.0
1/8 × 3/4	3.175	1/8	12	41.2
5/32 × 5/8	3.969	1/8	11	43.8
5/32 × 5/8	3.969	7/32	18	29.2
3/16 × 7/16	4.763	1/8	10	42.4
3/16 × 3/4	4.763	1/4	12	30.5
1/4 × 7/8	6.350	1/4	12	36.5
7 mm. × 1/2	7.000	3/16	10	38.2
11/32 × 1/2	8.731	1/8	10	49.7
3/8 × 1 1/4	9.525	3/8	10	36.0

Percentage of open area, punched sheet. The staggering of round holes at the corners of equilateral triangles gives a greater percentage of opening than when holes are at the corners of squares. For diagonal spacing $P = 0.905d^2/(s+d)^2$; for square spacing $P = 0.785d^2/(s+d)^2$, where d = diameter of hole and s = least width of clear metal between holes. With holes 1/2-diameter apart, diagonal spacing gives 40% discharge area against 35% for square spacing; with holes one diameter apart the corresponding percentages are 22.5 and 20. Percentage of opening for hit-and-miss endways punching (Fig. 8*e*) is

$$P = \frac{1}{4}\left[\frac{\pi d^2 + 4d(l-d)}{(s+d)(l+0.866s-0.134d)}\right]$$

where d = width of opening, s = spacing at sides and ends of slots, and l = length of slots. For straight punching and hit-and-miss sideways (Fig. 8*h* and 8*d* respectively) the formula is

$$P = \frac{1}{4}\left[\frac{\pi d^2 + 4d(l-d)}{(s+d)(s+l)}\right]$$

Slotted *vs.* round punched plate. Handy (*94 J 1123*) reports comparative performances on trommels at the BUNKER HILL & SULLIVAN mill. Table 12 shows screen tests of oversize from the two types of covering on trommels taking the same feed. This shows that the 7-mm. slot lets through more undersize than a 10-mm. round hole, thereby working at higher efficiency both in production of <7-mm. material and in producing clean oversize. Table 13 shows that a round-hole plate of a given opening retains 3 to 4 times as much undersize as a slot-punched plate of the same opening. In all of these tests the slots were punched at right angles to the direction of the trommel axis and were of such length that the clear horizontal projection with the plate on a 20° slope was a circle. The slotted screens blinded much less than the round-hole.

Table 11. Needle-slot screens
(*Allis-Chalmers Mfg. Co.*)
[Standard-length of slot, 15/32 in.]

No.	Mesh	Width of slot		Sheet thickness	
		In.	Mm.	U. S. Std.	In.
000	6	0.094	2.388	16	0.0625
00	8	0.083	2.108	16	0.0625
0	10	0.070	1.778	16	0.0625
1	12	0.058	1.473	16	0.0625
2	14	0.049	1.245	16	0.0625
3	16	0.042	1.067	18	0.050
4	18	0.035	0.889	18	0.050
5	20	0.029	0.737	20	0.0375
6	25	0.027	0.686	20	0.0375
7	30	0.024	0.610	20	0.0375
8	35	0.022	0.559	20	0.0375
9	40	0.020	0.508	22	0.03125
10	50	0.018	0.457	24	0.025
11	55	0.0165	0.419	24	0.025
12	60	0.015	0.381	24	0.025
13	70	0.0135	0.343	24	0.025
14	80	0.012	0.305	26	0.01875

Plate *vs.* woven-wire. Data in Table 14, from R. A. Leahy, compare the performances of one Hum-mer (Art. 7) and three Leahy screens (Art. 7) equipped with round-hole punched sheet or woven mesh with square or rectangular openings, applied to coarse, medium, and fine screening in the Tri-State district, where service on wet chert is notoriously severe; in all cases, the screens were in closed circuits with rolls. Failure of woven screens was frequently caused by attrition at the wire crossings, aggravated by the

Table 12. Comparative sizing tests of oversize on slotted and round-hole punched plate (*After Handy*)

Testing screen, mm.	Oversize from 10-mm. round-hole screen, weight, per cent.	Oversize from 7-mm. slotted hole, weight, per cent.
10	84.2	87.4
7	11.2	11.8
5	4.1	0.8
<5	0.5	.....

gritty fines. Sheets showed a tendency to break if too much tension (more than about one-half that appropriate for woven wire) was applied; when plate of No. 8 gage or heavier could be used, the knife-edged clamping bar of the Leahy screen could be omitted and the plate bolted directly to the suspension bar. Suitable slopes were 29 to 31° for sheet, 36 to 38° for woven-wire screens. CONCLUSIONS: (*1*) Marked economy in use of punched sheet is due to lower initial cost and (except for the finest Ton-Cap screen) longer life; advantage of sheet is still more pronounced if cost of replacement labor is considered.

Table 13. Comparative performances of slotted and round-hole plate on trommels (*After Handy*)

Testing screen, mm.	Oversize of 7-mm. screens, weight, per cent.		Oversize of 3-mm. screens, weight, per cent.	
	Slotted	Round-hole	Slotted	Round-hole
7	89.6	64.6	.....	.....
3	.....	.....	97.7	89.2
Through last screen	10.4	35.1	2.3	10.8

(*2*) Larger percentage of open area in woven wire does not afford a proportionate increase in hourly capacity; probably owing to the smoother flow over the sheet. (*3*) In the case of Ton-Cap No. 451, the orientation of the rectangular openings has little effect on capacity or life. (*4*) The reduction in slope (and headroom) permissible with sheet may often be advantageous. (*5*) Blinding is less serious with punched plate than with woven wire. It should be noted that these conclusions are based on tests with vibrating screens alone.

Table 14. Performance of punched plate *vs.* woven wire on vibrating screens (*Data from R. A. Leahy, in 1927*)

Test No.	Type of screen	Surface	Gage	Opening	Per cent. open area	Tons per hr. through	Life, tons	Cost of surface	Cost per 1,000 tons *a*
2	Leahy, 4 × 5 ft.	Plate	8	9/16 in. rd.	44.5	28.8	7,199	$8.00	$1.11
3	do.	do.	8	9/16 in. rd.	44.5	32.9	9,870	8.00	0.81
4	do.	Ton-Cap 451	.....	7/16 in. *b*	67.3	33.8	5,738	19.35	3.37
5	do.	do.	.....	7/16 in. *b*	67.3	32.6	4,563	19.35	4.24
6	Hum-mer, 4 × 5 ft.	do.	.....	7/16 in. *c*	67.3	27.8	3,892	19.35	4.97
7	do.	do.	.....	7/16 in. *c*	67.3	37.4	5,979	19.35	3.24
8	do.	Sq. mesh	9	1/2 in.	59.5	35.0	5,946	11.04	1.86
9	do.	do.	9	1/2 in.	59.5	31.7	5,741	11.04	1.93
10	Leahy, 4 × 5 ft.	Plate	12	3/16 in. rd.	34.5	66.2	27,793	6.40	0.23
11	do.	Ton-Cap 702	.....	3/16 in.	.....	66.0	22,450	17.50	0.78
12	do.	do.	.....	3/16 in.	.....	65.3	22,854	17.50	0.76
13	Leahy, 3 × 6 ft,	Plate	18	2.5 mm. rd.	24.75	62.5	10,616	4.68	0.44
14	do.	6-m., sq.	16	2.6 mm.	38.7	57.0	7,978	7.85	0.98
15	do.	5-m., sq.	13	2.7 mm.	29.2	55.8	8,368	10.50	1.25
16	do.	Ton-Cap 368	.....	2.3 mm.	40.5	65.9	13,173 *d*	19.35	1.47
17	do.	do.	.....	2.3 mm.	40.5	67.9	27,854	19.35	0.70

a Cost for material only; does not include replacement labor.
b Long dimension of hole parallel with flow.
c Long dimension of hole across flow.
d Failed by shearing when about half worn.

Percentage of opening, punched *vs.* woven screen. Consideration of the data in Tables 4, 5, 6, 8, 9, and 10 permits the following general conclusions. In the 3-in. size there is little to choose between the several types of equal weight. From 2-in. to 0.5-in., inclusive, there is considerable difference in favor of plate, as compared to square-mesh wire, the slot-punching giving the greatest opening, but in the 0.75-in. and 0.5-in. sizes the heavy rectangular-mesh has as much open space as the slot-punched plate. From 0.25-in. to 0.10-in., inclusive, slot-punched plate and heavy rectangular-mesh wire screen have substantially equal and the greatest amount of opening, with round-punched plate intermediate and heavy square-mesh wire the least. In the finer sizes, for screens of equal weight, rectangular-mesh woven wire has the greatest opening, needle-slot plate is intermediate, and square-mesh wire screen has the least, except in the finest sizes. Throughout the range of sizes, slotted screens have a greater percentage of opening than square- or round-hole.

Table 15 (*40 MEW 595*) shows the effect on screening capacity of difference in percentage of opening in screens of the same aperture. This test was made with different screens on a 5-stamp battery, the drop of stamps and water flow being maintained constant in the three cases.

Protection of screen surfaces is necessary when heavy loads are put over relatively fine screens. Thus when large run-of-mine rock is to be sent to a vibrating screen of, say, 3 or 4-in. aperture, it is customary to use a 2-deck screen with a grizzly having, say, 6-in. spacing as the upper deck. Another form of protection in a similar case is to weld longitudinal skid bars, 2 or 3 in. high and suitably spaced, on top of the screening surface. This obviates the necessity for a second deck.

Fine cloth, *e.g.*, 48-m. and finer, is usually backed with heavier coarse cloth. Thus at INTERNATIONAL NICKEL 65-m. screen used to close the grinding circuit (Sec. 5, Art. 12) was backed with 4-m. cloth, 0.045-in. diam. wire. Sponge-rubber blanket with large (1 3/8-in.) aperture between the two screens saves wear.

Table 15. Effect of percentage of opening on screen capacity and product

Mesh	24	30	40
Aperture	0.0176	0.0173	0.0178
Percentage on 100-m., 0.005-in. aperture	34.7	36.3	40.2
Tons crushed per 24 hr., by 5 stamps	10.8	14.6	16.4

Size of the product of a screen is by no means equal to the nominal dimension of the opening through which the product has passed. The maximum possible cubical particle that can be passed through a circular opening of diameter d has an edge $0.71d$. Larger platy or rounded particles can pass. Roessler has shown that on several different kinds of materials the average maximum size of the particles passing a round hole is only 81% that of those passing the same size of square hole. When a screen is tilted, the effective aperture is reduced substantially to that of the horizontal projection of the inner edges of the actual aperture. The amount of reduction in effective aperture depends upon the amount of tilt and the thickness of the screen.

Table 16. Equivalent round and square screen apertures, inches (*Recommended by U. S. Dept. of Commerce*)

Square	Round	Square	Round	Square	Round
4	4 3/4	2 1/8	2 1/2	3/4	7/8
3 3/4	4 1/2	2	2 3/8	5/8	3/4
3 1/2	4 1/4	1 7/8	2 1/4	1/2	5/8
3 5/16	4	1 3/4	2	3/8	1/2
3 1/8	3 3/4	1 1/2	1 3/4	5/16	3/8
3	3 1/2	1 1/4	1 1/2	1/4	5/16
2 3/4	3 1/4	1 1/8	1 3/8	3/16	1/4
2 1/2	3	1	1 1/4	5/32	3/16
2 1/4	2 3/4	7/8	1	3/32	1/8

Table 16 gives recommendations of the U. S. Dept. of Commerce on the equivalence of round and square holes for screening of coarse aggregates. Designers with the ALLIS-CHALMERS MFG. CO. estimate that, for a given maximum size of product, the side of a square opening should be 80 to 85% of the diameter of the required round hole; with rectangular-mesh woven wire, the short dimension should be 65 to 70% of the round-hole diameter. Much depends on the thickness of wire or plate; the greater the thickness the larger the aperture necessary to pass a product with a given maximum size.

Arthur Crowfoot (*PC*) states that at No. 6 Concentrator, MORENCI BRANCH, PHELPS-DODGE CORPORATION, a 0.280-in. aperture is used to produce a 0.185-in. product on Hum-mer screens set at 38° from the horizontal. Holbrook and Fraser (*Bul 234 USBM*) state that 1/4-in. screen at 45° made a 1/8-in.

Table 17. Relation between screen aperture and size of largest particle in product of various types of screens

Size of particle, inches *a*	Size of aperture					
	Round			Square		
	Flat surface	Steeply sloping surface *b*	Revolving screen	Flat surface	Steeply sloping surface	Revolving screen
0.25	0.35	0.50	0.5	0.28	0.38	0.40
0.375	0.55	0.75	0.75	0.45	0.57	0.60
0.50	0.75	1.0	0.88	0.62	0.75	0.75
0.75	1.0	1.50	1.25	0.81	1.15	1.15
1	1.5	2.0	1.88	1.15	1.50	1.50
1.25	1.75	2.50	2.25	1.40	2.0	1.75
1.5	2.0	2.75	2.5	1.62	2.25	2.0
1.75	2.5	3.25	3.0	2.0	2.75	2.5
2	2.75	3.75	3.5	2.25	3.0	2.75
2.5	3.5	4.75	4.0	2.88	3.75	3.25
3	4.25	5.50	5.0	3.5	4.5	4.0
3.5	5.0	6.50	6.0	4.0	5.25	4.75
4	5.75	7.50	7.25	4.75	6.0	6.0

a Intermediate dimension of roughly three-dimensional particles. *b* 40° to 45°.

product, and that at 35° slope round-hole screens pass a product whose maximum-sized particles are about two-thirds the diameter of the hole. Referring to concentrating practice, they say that in one mill a 30-m. wire cloth at 45° gave 50-m. maximum undersize and that a 1-in. round-hole plate at 45° produced <1/2-in. undersize. Under such conditions, however, the undersize will contain TRAMP OVERSIZE, *i.e.*, occasional particles considerably larger than the average maximum, that work through because of some irregularity in the direction or velocity of presentation. A rectangular-mesh woven-wire screen, with apertures at least twice as long as wide, and set with the long dimension of the aperture parallel to the direction of slope, presents substantially the full aperture to material flowing down slope. On a vibrating screen with fairly large throw, thus equipped, and with material varying considerably in size, the amount of tramp oversize rarely reaches 5%. Bland (*107 J 1114*) states that while 20-m. cloth on some vibrating screens delivers <40-m. product, the screening is incomplete, difficult grains are not passed, and while the oversize from hand screening will be shown to contain 40-m. grains the undersize will contain 20-m. grains. He states further that an inclination of 35° will decrease the effective dimension of the opening less than 10% rather than upward of 18% as would be indicated by the geometrical solution. Table 17 is an empirical table, showing the sizes of maximum particles that are to be expected in a product screened through apertures of various diameters. In the smaller sizes particularly it is necessary to increase the screen apertures as much as 100%, if the ore is damp and sticky, in order to pass the same maximum-size particles.

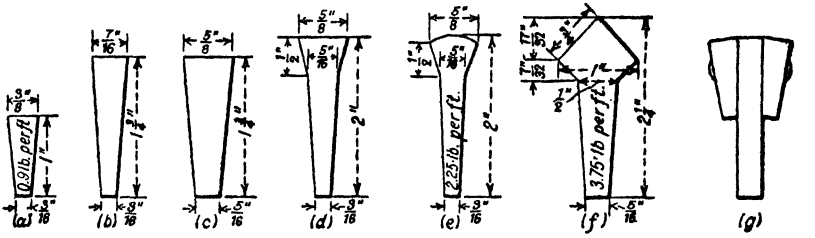

FIG. 9. Grizzly bars.

Bar-screen surfaces are often improvised from discarded rails (flanges up), gravity-stamp stems, or other suitably shaped rolled steel or castings, fixed in parallel position by cross bars and spacers. Better forms are shown in Fig. 9; most durable materials are manganese steel or plain steel with stellited wearing surface. For bars shaped as in Fig. 9 (*a*, *b*, *c*), a taper of 1/16 in. on each side per inch of depth will usually prevent blinding by most materials. More recent types of bars taper longitudinally as well as vertically, thus facilitating passage of slightly oversize lumps, the screen, as is usual, being set at a slope permitting the ore to roll or slide. Grizzly screens, which are not intended for close sizing, are usually confined to the coarsest work, as at the head of a mill, although they have been used for separations as small as 3/8 in. Bars are applied to stationary, semiflexible, oscillating, and vibrating screens; for structural details, see Art. 4.

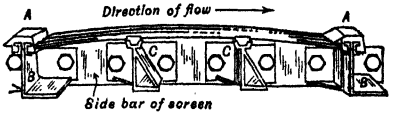

FIG. 10. Longitudinal section of one panel of Rod deck.

Rod deck is composed of spring-steel rods, 23 in. long and of diameters given in Table 18, spaced and held in position (lengthwise of the screen) by being sprung between molded rubber blocks *A*, Fig. 10. The latter are attached to the upper edges of angle bars *B*, forming intermediate cross members of the screen frame. Between end supports, the rods rest on two intervening cross members *C*, also capped with rubber. Any rod can thus be removed or replaced individually; its elasticity holds it securely in place. This method, in effect, produces a screen with apertures about 7 in. long and the widths stated in Table 18.

Table 18. Rod-deck wires and spacings

Opening, in.	Wire diameter	
	W. & M. gage	Inch
1/8	8	0.162
3/16	6	0.192
1/4	3	0.244
5/16	3	0.244
3/8	3	0.244
1/2	0	0.307
5/8	0	0.307
3/4	0	0.307

Another form has the rods assembled in 12-in. panels, usually built with the rods transverse to the flow. Such a surface was used, after extensive tests, for the screens in the cone-crusher circuits at Morenci. Since there is no reason to expect differential wear on particular rods, this would seem to be a better arrangement mechanically. To date (1940) assembled rod deck has not been used for less than 4-m. The manufacturer recommends setting it longitudinally for apertures larger than 3/4-in.

Wedge wire screen is composed of parallel wires having the sections shown in Fig. 11 and dimensions given in Table 19. Usual metals are mild, high-carbon, or stainless steels, brass, and phosphor bronze. At intervals of 2.75 in. for the light and standard sections, or of 6 in. for the heavy sections, each wire is bent to a closed loop, the metal then being pressed from the sides to such thickness as will give the desired spacing when the wires are assembled on rods passing crosswise through all the loops. Wider openings, with wires

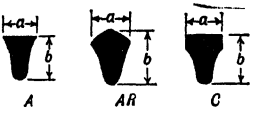

FIG. 11. Sections of Wedge wire.

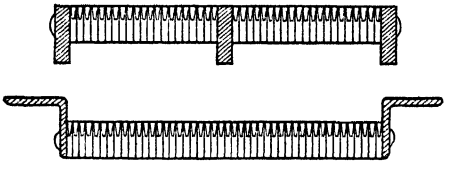

FIG. 12. Methods of mounting Wedge-wire screens.

of a given size, are secured by spacing washers. Ends of the cross rods are either peened or threaded for nuts. Sides of the assembled screen are usually reinforced by plates or angles through which the cross rods also pass, and intermediate longitudinal stiffening bars (about 12 in. apart and supported at both ends) are recommended for screens wider than 20 in. (Fig. 12). For additional rigidity, the loops may be brazed together on their underside and also to the side reinforcements. This method of construction allows the assembling of a screen to any desired dimensions or shape—plane, curved, or bent.

Table 19. Specifications of Wedge-wire screens (*Abbé Eng. Co.*)

Minimum slot width		Wire dimensions, in.		Slots per ft. of width	Weight per sq. ft., lb.
Mm.	In.	*a*, Fig. 11	*b*, Fig. 11		
Light section—Profile *A* only					
0.10	0.0039	0.085	0.124	135	6
Standard section—Profiles *A* and *AR*					
0.125	0.0049	0.102	0.192	113	8.5
0.25	0.0098	0.104	0.192	106	8.5
0.5	0.0197	0.111	0.192	92	8
0.75	0.0295	0.111	0.192	86	7.65
1	0.0394	0.111	0.192	80	7.15
1.25	0.0492	0.114	0.204	74	7.5
1.3	0.0512	0.105	0.192	77	6.75
1.5	0.0590	0.114	0.204	70	7.5
2	0.0787	0.131	0.208	58	7.25
2.5	0.0985	0.128	0.228	53	6.9
3	0.1180	0.133	0.238	48	6.9
Heavy section—Profile *A* only					
0.5	0.0197	0.098	0.210	101	8.75
1.59	0.0625	0.125	0.238	64	5.75
3.15	0.1250	0.128	0.230	48	5.25
Extra heavy section—Profile *A* only					
2	0.0787	0.202	0.308	43	10
3.15	0.1250	0.217	0.308	35	8.5
4.77	0.1875	0.202	0.308	31	7.75
Square-head section—Profile *C* only					
0.5	0.0197	0.098	0.192	101	8

Heller screen is composed of high-carbon (piano) or stainless steel wires, all laid in one direction and attached to a frame only at their ends, with no cross wires. Tension in the wires is sufficient to develop a resonance which facilitates the passage of fines. Standard spacings are 3/8 in. to 150-m. It must not be welded to intermediate supports on account of consequent loss of temper. Screen of this type has been installed on Jeffrey-Traylor vibrators (Art. 7).

TYPES OF SCREENS

Screens are classified on the basis of their method of support as FIXED and MOVING. Fixed screens are placed at any angle from 0° to 45° from the horizontal. When set at the smaller angles they are meant to retain the oversize for treatment such as sledging or hand-picking, and material must be worked over and through them manually. Fixed screens are used for both coarse and fine screening, most frequently in the former service. Moving screens are of many forms, but most of them may be placed in one of the four classes: shaking, vibrating, revolving, traveling-belt. Fixed screens are almost invariably run dry; moving screens are run either wet or dry. Neither type will operate satisfactorily on damp material.

4. GRIZZLIES AND FIXED SCREENS

Fixed screens with heavy screening surfaces usually made of parallel bars, are called GRIZZLIES; Fig. 9 shows typical sections of such bars. Their economical use is limited to coarse screening (aperture 1 1/2-in. and upward). A typical small grizzly as sold by the supply houses is shown in Fig. 13. The bars are usually held together by bolts at right angles to their length and are spaced the desired distance apart by thimbles or sleeves on the bolts. The bolts should be spaced about 2 ft. with heavy, coarse ore, otherwise the bars will spread unless they are very stiff. The disadvantage of this type of screen is clogging owing to the retarding effect of the cross pieces. This may be overcome by making the bars deeper and holding them in comblike cross plates with one through bolt near the head end to keep them in place.



FIG. 13. Standard fixed grizzly.

Fig. 14 shows such an arrangement adopted by the MIAMI COPPER CO. Another form is shown in Fig. 15. Soft steel bars 1 × 5 in. are clipped to heavy 4×4-in. cross supporting angles with heavy angle clips. This method of construction brings the cross bars well below the path of most particles and eliminates interference with the flow of particles. The particular grizzly shown was fed with maximum-size lumps weighing from 100 to 150 lb. and falling approximately 2 ft., yet the bars are said to have been

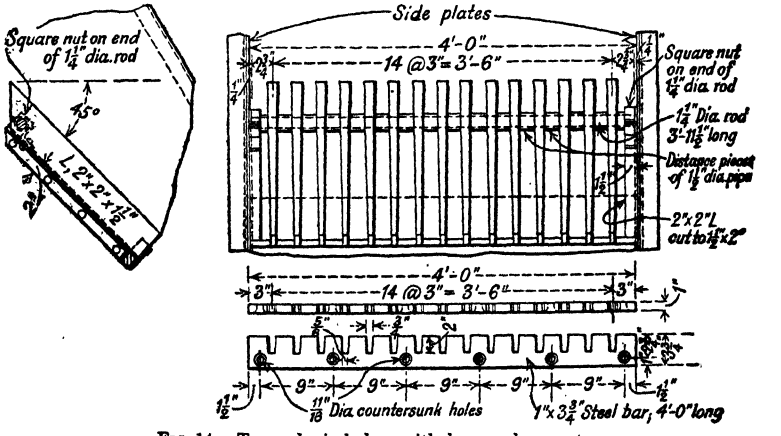

FIG. 14. Tapered grizzly bars with depressed supports.

capable of wearing to 2 in. in height before it was necessary to replace them (*98 J 1045*). Bars that taper along the run as shown in Fig. 14 tend to prevent clogging. At HOLLINGER MINES (*119 Bul CMI 341*) the spaces between bars are enlarged from 3.5 in. to 7.5 in. in a length of 8.5 ft.

Rail grizzlies are widely used for very coarse sizing where severe service is anticipated. These may be made of 15 to 150-lb. rail suitably braced and spaced. They are rarely used with spacings of less than 5 in. because they clog seriously with the narrower openings.

Where the largest lumps in the feed are very much larger than the final size it is desired to pass through the grizzly, the arrangement employed in the QUINCY rock house (*100 J 103*) is useful. Skips dumped onto plates and the rock passed thence first over a short grizzly with 3-in. openings, then over a grizzly (in the same plane) with 6-in. round bars spaced 20-in. centers for taking out the largest lumps

of feed. These passed to a drop hammer. The oversize of the 3-in. grizzly passed to the crushers and undersize to the stamp-rock bins. It was probably necessary to help some large lumps across the coarse grizzly, which was long (12 ft.) and set at 16° slope.

When heavy loads are to be dumped directly onto a grizzly, strength is an important factor in design.

At the Arthur mill of UTAH COPPER CO. (*118 P 469*) 50 to 80-ton cars are dumped by a revolving car dumper directly onto a grizzly set at 35°. The bars are made of 12-in. @ 28.5-lb. I-beams, 32 ft. long, capped with special manganese-steel castings, set with 5-in. clear opening at the upper end and 6-in. at the lower. At ALASKA-GASTINEAU (*63 A 493*) 10-ton cars were dumped four-at-a-time onto plates and thence passed over a 10-in. grizzly made of 8-in. I-beams with manganese-steel shoes. After 6,000,000 tons had passed over this grizzly some of the bars had to be replaced on account of bending but the shoes were still serviceable.

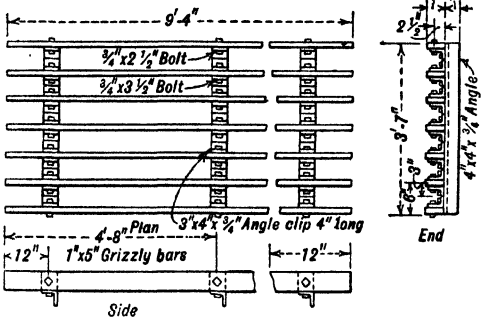

FIG. 15. Grizzly with depressed cross bars.

Slope of grizzly depends upon its purpose. A flat grizzly is used on top of ore bins fed by skips or cars in order to catch and hold lumps that are too large to pass the bin gates or enter the crusher until they can be sledged to proper size, as determined by the spacing of the grizzly bars. Grizzlies in the feed chute to primary crushers are set at such a slope that material will just slide over them (±30°) or will just not slide (±25°) so that the movement over them is readily controlled by the crusher tender, allowing him to remove waste of all kinds from the mill feed. To insure free movement of material, the slope should be from 35 to 45° or as high as 50° for sticky ores. A lower slope may be used when material is delivered with an initial velocity in the direction of the slope.

Holbrook and Fraser (*Bul 234 USBM*) offer the following data on sliding angles. Egg-size anthracite (2 5/16 to 3 1/4 in.) will just slide uniformly on glass at 2 1/4 in. per ft., manganese bronze at 2 5/8 in., mild steel at 3 in. and cast iron at 3 1/2 in. per ft. (16° 15′). Slopes for anthracite are less than for bituminous coal, and ores require more slope than either. Dry quartzite ran well on steel plate at 35°. Steel-lined chutes for Lake Superior copper ores are commonly 26° to 30°. Experimental results are given in Table 20. It must be remembered that blinding causes the screen surface to become rough and that steeper slopes than those given in the table must be used to overcome this difficulty. Moist ores require 10 or 15° greater slope than dry. Concavely curved bars have been used in coal-screening grizzlies, where it is desirable to discharge oversize with as low velocity as possible to prevent breakage.

Table 20. Sliding angles of various substances on bright steel (*After Holbrook and Fraser*)

Material	Starting angle (static friction)	Angle on which material continued to run (kinetic friction)	Slopes used in practice
Pennsylvania anthracite:			
Egg size	15° 40′	14° 00′	14° to 16°
Chestnut size	16° 40′	15° 10′	18° to 20°
Southern Illinois coal:			
6-in. lump	21° 50′	20° 40′	22° 30′
Run-of-mine			30° to 35°
Slack	25° 40′	22° 30′	30° to 45°
Oklahoma screenings	24° 00′	22° 30′	30° to 45°
Chestnut size (McAlester seam)	21° 00′	19° 00′	
East Kentucky egg, 4 × 6 in.	21° 50′	20° 20′	26° 28′ bars.
Bituminous shale	21° 10′	20° 00′	
Limestone-gangue ores	19° 40′	17° 30′	
Sandstone-gangue ores	22° 30′	19° 40′	30° to 40° for steel.
Hematite (Lake iron ore)	22° 40′	20° 40′	45° for wood.
Missouri galena	19° 20′	17° 20′	

chutes.

Size of grizzly depends upon the size of feed, percentage of undersize, slope, and aperture. Width is governed by the same rule as that applying to chutes, *viz.*, minimum width

should be at least three times the size of the largest lumps in the feed, if the feed is fairly uniform in size, or twice as wide, if large lumps are rare. The width is usually determined, however, by other factors, such as chute width, width of car or skip supplying the feed, or receiving width of crusher. Length is determined by the amount of screening to be done, *i.e.*, if the aperture is small and the percentage of undersize large, more length must be provided than under reverse conditions. Steep grizzlies should be longer than flat ones. No quantitative rules can be set down. Length is frequently made twice the width, but for no logical reason. If large particles slide along carrying fine material with them, they can be turned over by a drop in the grizzly surface or by dependent swinging bars, chains, ropes or the like placed about halfway along the length. These will, however, slow down the material and hence make it necessary to set the grizzly on a steeper slope than otherwise. Table 21 gives examples from practice.

Table 21. Performance of rigid-bar grizzlies

	Bunker Hill & Sullivan		Nacozari *IC 6358*	Homestake *IC 6408*	Spring Hill *IC 6411*	Engels *IC 6550*	Morenci *IC 6460*
	South mill *IC 6314*	Sweeny mill *IC 6314*					
Width × length, in.	18 × 51	24 × 40	.....	.....	? × 42	48 × 48	52 × 38
Bars	*a*	*a*	.....	*b*	*c*	Mn-steel	.....
Spacing, in.	1 1/2	1 1/2	4	3	1–1 1/2	3	4
Slope, deg.	45	33 2/3	45	.....	.....	34	.....
Max. size in feed, in.	.....	.....	16	6	5	.....	18
Per cent. oversize in feed	.....	.....	70	.....	80	80	.....
Tons per hr. feed	80	46	95	.....	20	33 *d*	350
Tons per hr. per sq. ft.	12.5	7	.....	.....	.....	2 *d*	25.5

a Trapezoidal section.

b Cast-iron bars, 6 in. deep, 1 1/2 in. wide at top, 1 in. thick at bottom; resting on cast-iron combs supported by I-beams.

c Rectangular bars curving downward at lower end and cross-braced only at upper and lower ends; wider spacing at bottom.

d Not full capacity.

Average capacity with rigidly fastened bars may be taken as about 125 tons per sq. ft. of surface per 24 hr. with 1-in. opening and proportionately greater with wider apertures.

Cantilever grizzly improves the screening capacity of the older type of fixed-bar screens by: (*a*) use of bars tapering lengthwise as well as vertically; (*b*) omitting all cross bars except two at the top essential for support. The lower two-thirds or more of each bar is thus free to vibrate under impact from dumping of the load; this, together with the diverging space between bars, multiplies the capacity of a rigid and equally spaced grizzly by four or five times, while also performing satisfactorily with wetter material.

Fig. 16 shows one method of supporting the bars adopted by an American manufacturer. From *a* to *b*, the bar is rectangular, 3 × 1 1/8 in.; it tapers thence to the end, where the section is 2 in. high (all the taper being on the underside of the bar), 3/4 in. wide at top, 1/2 in. wide at bottom. Slope of the bars is adjustable between 30° and 40° by two nuts *c*, on which hang the entire weight of screen and load, through the cross bar *d*. Standard sizes range from 2 × 4 1/2 ft. to 3 × 5 1/2 ft., and spacings from 1/2 to 3 1/2 in. Capacity, about 30 tons per hr. per sq. ft. at 1-in. spacing and 35° slope. A similar grizzly was installed

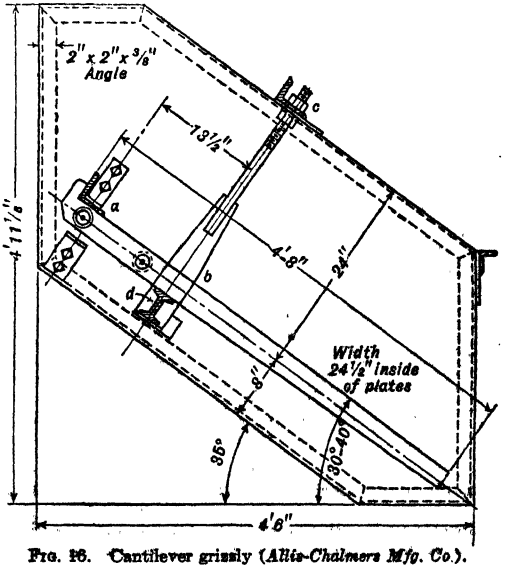

Fig. 16. Cantilever grizzly (*Allis-Chalmers Mfg. Co.*).

by MIAMI COPPER CO. in the discharge chutes from coarse-ore bins. Here the bars were 4 × 1 1/8 in. for 21 1/2 in. from their upper ends, tapering thence to 3 × 3/4 in. at lower ends; over-all length, 5 1/2 ft. Spacing of 1 in. at top was thus enlarged to 1 3/8 in. at bottom, with a free overhang of 46 in. Two cross bars (3/4-in. round steel with nuts at both ends) were 16 in. apart, upper one being 4 in. from end of bar. With 22 bars, width, c.-c. of outside bars, was 44 5/8 in.

Self-cleaning grizzly. Simcox and Humes (*117 J 307*) describe the grizzly illustrated in Fig. 17. The revolving arms prevent material from sticking between the bars. At COPPER QUEEN smelter this machine handled 196 tons per hr. of talcky ore containing 10 to 12% moisture which could not be handled by other types of grizzlies, and previously had been dried and rehandled at considerable expense.

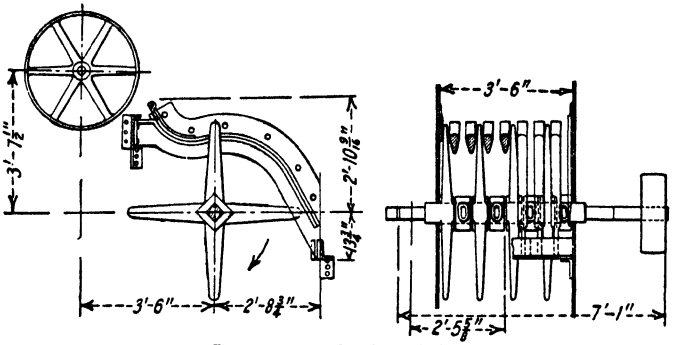

FIG. 17. Self-cleaning grizzly.

ADVANTAGES of fixed grizzlies are simplicity and ruggedness. DISADVANTAGES are inefficiency, loss of headroom, blinding, and, in the case of coal screening, breakage of oversize.

Moving grizzlies of various types are used for the purpose of bettering screening, lessening breakage of material, and saving headroom. The first two purposes have determined their use in coal breakers, the second, in many ore-treatment plants.

Moving-bar grizzly (Fig. 18). Bars are mounted at one end on an eccentric, adjacent bars 180° apart, and are so driven that they move forward at the high position. Speed is about 150 r.p.m.; power, 5 to 7.5 hp. The forward movement, together with a forward inclination of about 10°, moves lump material gently along the grizzly and at the same time turns it over well and allows fines to drop through. Usual range of spacing, 3/4 to 3 in.; capacity, 4 tons per hr. per sq. ft. at 1-in. spacing.

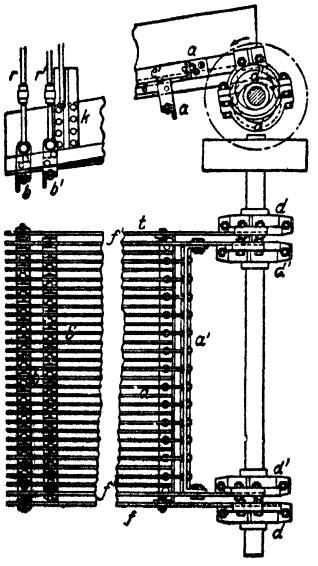

FIG. 18. Briart moving-bar grizzly.

Chain grizzly is suitable for installing between the rails of R.R. track over crude-ore bins dealing with large tonnages (500 to 1,000 tons per hr.). At the ROWE MINE, Riverton, Minn. (*101 J 599*), such a grizzly was built of old steam-shovel chains stretched endless over sprockets, the run of the chains being horizontal. Longitudinal rods in the plane of the upper chains were placed between the chains so that the distance of a chain from a rod determined the aperture of the grizzly. Alternate chains were run at different speeds in order to break up lumps held together by clay and to prevent blinding. Oversize traveled on the chains to a chute feeding a primary crusher. The speed of the chains was 16 and 18 ft. per min. respectively, and it was possible to dump a 50-ton car directly onto the grizzly. Eleven supporting rollers were used between the head and tail rollers in a length of about 20 ft.

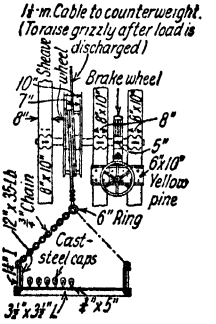

FIG. 19. Movable sorting grizzly, Port Henry Iron Ore Co.

Movable sorting grizzly used at PORT HENRY IRON ORE CO. is shown in Fig. 19 (*88 J 884*). Its position is controlled by the band wheel. The counterweight is heavy enough to raise the empty grizzly to

a horizontal position. The size is 6 ft. wide and 11 ft. long with 4-in. clear space between bars. The slope for discharging is 35°.

Traveling grizzly (Fig. 20) consists of short lengths of rail running across between two sprocket chains, the latter operating over head and tail sprockets, gear-driven. This grizzly is placed directly under a feed chute and is normally of adjustable speed to regulate feed to a crushing machine. Undersize passes through the upper run and is diverted both sides by chutes. Oversize is discharged over the head sprocket. Any material that tends to wedge between the bars is readily freed at the head sprocket because of spreading of the bars in passing around. Another form of this same grizzly is shown in Fig. 21*a*. The drop of the bars on the lower run clears the surface and also allows the undersize chute to be placed below the return run. Fig. 21*b* shows the same type of grizzly used as a roller feeder. Speeds range, usually, between 10 and 20 ft. per min.

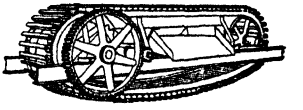

FIG. 20. Traveling-bar grizzly.

Disk or roller type of grizzly consists of a series of disks properly spaced and mounted rigidly on a shaft, usually at the discharge gate of a bin. The shaft is driven by a sprocket chain or by ratchet and pawl; oversize rides on the disks and passes to a crushing machine, while undersize drops between the disks into a chute. Peripheral speed controls the feed rate, but should not, in general, exceed 100 ft. per min.

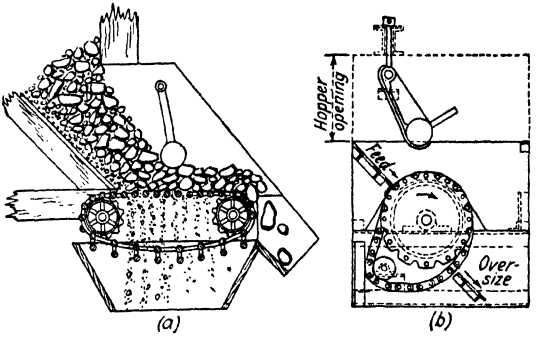

FIG. 21. Drop-bar traveling grizzly.

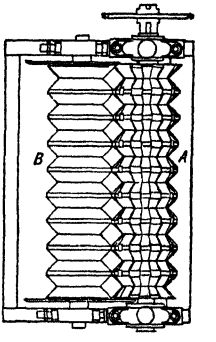

FIG. 22. Ross roll grizzly.

Ross roll grizzly (*45 MM 169*) consists of a pair of rollers corrugated circumferentially as in Fig. 22. Roller *A* only is driven; idle roller *B* is adjustable sideways with respect to *A*. The corrugations of roller *A* are serrated. Feed is onto the idler roll; oversize is carried away over the serrated roll.

Live-roll or spool grizzly (Fig. 23) consists of 5 or a greater odd number of parallel circumferentially grooved rollers *a*, mounted on a frame *b*, which is usually set on a slope of 22 1/2°. Roll shafts project into box *c*, there carrying sprockets *d* of such size and so connected that the rolls are all driven in one direction (upper surfaces down slope) by the drive shaft *e*. Roller speeds increase toward the discharge end, which tends to spread out oversize. Grooving of the roll faces is effected by using cast rollers, or replaceable spools or alternate disk-and-sleeve construction. Aperture is determined by shaft spacing (10 to 18 in. is usual) and disk projection; usual aperture range is 1 1/2 to 7 in. Standard widths are 30, 36, 42, and 48 in.

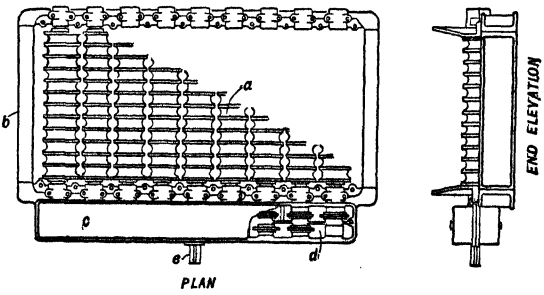

FIG. 23. Live-roll grizzly.

Burch ring grizzly (Fig. 24) is a special form of the roller type. It consists of two disk-shaped heads *A* mounted on shaft *E* and tied together by rods *G* on which are mounted close-fitting rings *C*, held in place by spacers *D*, and alternate loose rings *B* spaced centrally between the rings *C* by the lugs *I*. The principle lies in the fact that the loose rings always hang down in such a way that the space between adjacent rings at the bottom is greater than at the top and anything that passes between rings at the top is, therefore, readily discharged at the bottom.

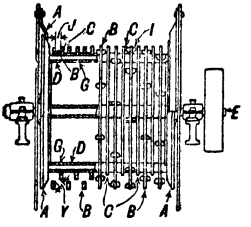

FIG. 24. Burch ring grizzly.

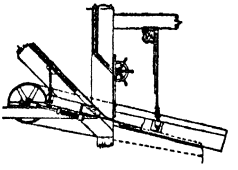

FIG. 25. Shaking grizzly.

Shaking grizzly is shown in Fig. 25. It consists of grizzly bars carried in a suspended frame actuated by an eccentric. The surface of the bars is ordinarily inclined about 10° in the direction of flow, although this is not entirely necessary, if the method of suspension is that of the Ferraris screen. Speed should be about 80 to 100 strokes per min. Capacity is about 125 tons per sq. ft. per 24 hr. per in. of aperture.

At EMPIRE STEEL AND IRON CO. (*99 J 560*) this type of grizzly with 2-in. spaces clogged badly and the bars were replaced by 3/4-in. manganese steel plate with 2-in. round holes. This overcame the difficulty.

Vibrating grizzly, often serving also as feeder to a following crusher, has its bars mounted in a frame which can be vibrated electromagnetically, by the same devices as those applied to the Jeffrey-Traylor "FB" or the Allis-Chalmers "Utah" screens (Art. 7). The bars may be fastened together at their outer ends, or left free, as in the cantilever grizzly. Owing to the rapid vibrations (to 3,600 per min.), and their forward and upward direction, oversize will travel along bars set horizontally or at a very slight pitch, thereby overcoming one of the chief drawbacks of the stationary grizzly.

Fixed screens, as distinguished from fixed grizzlies, are lighter and are used for finer sizing. They have an inclined screening surface consisting of cast-metal grids, punched plate, or woven wire instead of parallel bars. They size more closely than a grizzly since they limit the particle in two directions.

Holbrook and Frazer (*Bul 234 USBM*) report that the undersize of a 1-in. grizzly yielded 24% on a 1-in. round-hole screen and that some of the material would not pass a 2-in. round hole.

Punched-plate screens may ordinarily be set on the same or a slightly steeper slope than a grizzly except that, when used for fine feeds, the slope must be increased. Table 20 gives sliding angles for coal and a few ores on bright steel. Woven-wire cloth must be set on a slope considerably steeper (by 5 to 15°) than either bars or punched plate on account of the rougher surface. Capacity of fixed screens is 2 to 4 tons per sq. ft. per 24 hr. per mm. of aperture.

At OHIO COPPER CO. (*99 J 749*) heavy wire screens, 2 ft. wide by 8 ft. long with 0.375 × 1-in. apertures, set on a 45° slope, handled 250 tons per 24 hr. or 1.1 tons per sq. ft. per 24 hr. per mm. At the old coarse crushing plant of the Arthur mill of UTAH COPPER CO. (*117 P 715*) the 72×20-in. roll circuit was closed with stationary square-mesh woven-wire screens set at 40° slope, the aperture ranging from 1 to 1.5 in. as the moisture ranged from 5 to 13%. In the new plant these screens were replaced by vibrating and later by impact screens. At ALASKA-GASTINEAU (*65 A 493*) <10-in. material was fed at the rate of 1,000 tons per 8 hr. to a stationary woven-wire screen with 2.5-in. aperture, 3 ft. wide by 14 ft. long, set at 45° slope. This is 1.1 tons per sq. ft. per 24 hr. per mm. At TENNESSEE COPPER primary crusher discharge, at 2 1/2 in. and carrying 2.5% moisture, is fed by belt conveyor to a 48×54-in. stationary screen set at 36° slope (*Q*). Rate of feed, 200 tons per hr. The screen is of 0.207-in. Tyler wire with 1 1/8-in. opening; life, 17 days; replaced by 2 men in 20 min. Blinding does not occur unless moisture becomes abnormal. At ANDES COPPER the 3 1/2-in. primary-crusher discharge passes, on its way to intermediate crushing, over 10 stationary screens fed in parallel by drum or pulley feeders from a 1,590-ton bin (*Q*). Each screen, with an area of 21 × 40 in., consists of two segments of cast-iron plate, 1 in. thick, each segment having 193 cored holes of 1 1/2-in. diam. At average rate of 70 tons per hr. (no circulating load) life of a screen is 12,600 tons; two men replace a screen in 1 hr. Blinding is not serious at normal 4 to 5% moisture. At NEVADA CONSOL. (Ray) 10,000 tons per day of run-of-mine ore passes over two stationary screens in parallel, both discharging undersize to a third stationary screen; all slope 40°; moisture, 3.8% (*Q*). The coarser screens, 10 1/3 × 14 ft. are of manganese steel,

cast in the form of interwoven 1 1/4-in. bars with 3-in. square openings, and in segments 61 × 41 3/4 in. Life is about 5 yr.; it takes 4 men 3 hr. to replace one. Screens are fed through air-operated gates from a 50-ton surge bin. The finer screen, 56 × 80 in., is of woven 1/2-in. steel wire with 1 1/4-in. aperture; its life is 80 days. NEW JERSEY ZINC employs five 32×36-in. stationary screens, all of 3/16-in. steel plate set at 45° slope and all fed, from chutes, with crude ore averaging 1.5% moisture. One with 1.5-in. holes receives 68 tons per hr. of material 26.4% of which is coarser than 1.5-in. round hole; its coarse product carries 40.9% of undersize; life of this screen, 35 days. The other four screens, all having 5/8-in. holes, are fed at rates of 23 to 43 tons per hr. according to their functions in the flowsheet; life averages 50 days.

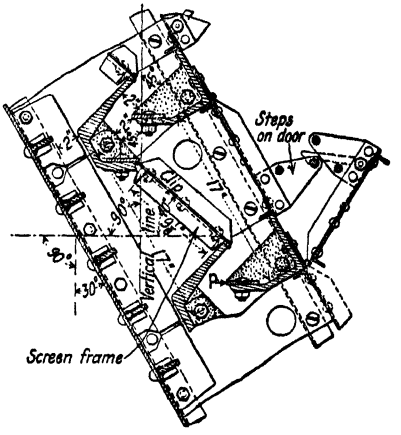

FIG. 26. Rowand screen.

Rowand screen (Fig. 26) is a modification of the old Edison screen (*OD*). Both types were used by NEW JERSEY ZINC and subsidiaries for relatively fine screening of dry ores. The object of the apparatus is to feed ore in a thin regular stream over the whole screen surface and to break the flow of the ore a sufficient number of times to keep the velocity of the particles on the screen cloth low and to have them, therefore, slide rather than roll and bound. The essential factors in such screening are to have the feed substantially bone dry and to keep the apertures clear. Any moisture decreases efficiency and increases wear markedly. Table 22 gives performances.

The Rowand screen at NEW JERSEY ZINC was probably the best designed and most carefully operated fixed-screen installation in the world. With bone-dry ore it sized satisfactorily, but at a low rate and an extravagant loss of headroom. With a moisture content so low as to fail to prevent dusting, circulating load built up to enormous proportions, and it required a special mill crew equipped with wire brushes to drive undersize through the meshes. Vibrating screens (Art. 7) are now used.

Table 22. Rowand screens at New Jersey Zinc Co.

[All equipped with slotted steel plates lasting 300 days.]

Sq. ft. of surface	Width of aperture, in.	Slope, degrees	Tons per hr., new feed	Tons per hr., total	Tons per sq. ft. per 24 hr.	Tons per sq. ft. per 24 hr. per mm. of aperture
15	0.750	45	28	112	179	9.39
48	0.3125	40	8	32	16	2.02
60	0.1875	40	6	24	9.6	2.02
80	0.125	40	4	16	4.8	1.51
120	0.0945	40	40	40	8.0	3.33
84	0.082	40	6.8	6.8	1.94	0.93
96	0.0705	40	6.8	6.8	1.7	0.95
84	0.055	40	4.0	4.0	1.14	0.81
96	0.038	40	4.0	4.0	1.0	1.03
108	0.028	40	3.28	3.28	0.73	1.03
108	0.020	40	3.28	3.28	0.73	1.43
108	0.016	40	2.76	2.76	0.61	1.50
108	0.013	40	0.96	0.96	0.21	0.64

Drag screen is essentially a flight conveyor (Sec. 18, Art. 9) in a trough with perforated bottom. It may be set at any slope from a downward incline less than the sliding angle of the material to a rise of the same inclination. The usual range in size is from 4 to 10 ft. wide and from 10 to 25 ft. long.

The usual CAPACITY of drag screens with 1/8- to 5/16-in. round-hole plate is 1 ton per sq. ft. per hr.; the general limits are between 2 and 15 tons per sq. ft. per 24 hr. per mm. aperture. The usual speed is 60 to 100 ft. per min. but speeds from 40 to 240 ft. per min. are reported. Wear is not great with coal but is excessive with hard ore. The screen is used principally as a dewatering elevator or conveyor in coal washing, where screening is of secondary importance.

Lincoln (*11 Bul UI, No. 9*) describes such a screen 2 ft. wide × 24 ft. long with 16 ft. of 1 3/4-in. slotted plate and 8 ft. of 3/8-in. square-hole plate which handled 40 tons per hr. of <3 3/4-in. raw coal. Another screen 3 ft. wide × 30 ft. long with 1 1/2-in. grizzly bottom, sloped + 26° for part of the run, then horizontal, handled 600 tons per 8 hr. at 80 ft. per min.

5. REVOLVING SCREENS AND TROMMELS

Revolving screens have been used more widely than any other type of movable screen, but in recent years they have largely been displaced in ore-dressing plants by vibrating

screens (Art. 7). At present the two chief fields for revolving screens (outside of certain small mills where they are retained for their simplicity) are: (*a*) on gold and tin dredges (Sec. 2, Art. 21), for which service they are particularly adapted because of their ability to disintegrate clay-bound or cemented gravel; (*b*) for sizing of construction gravel and crushed stone. Trommels have also entered a new field as "dry scrubbers"; when so used, the screen is equipped with a low, annular dam at its discharge end and, if necessary, plate or angle-iron lifters are fastened inside of the shell. The ordinary cylindrical TROMMEL as used in ore-treatment plants is shown in Fig. 27. It consists essentially of a through-shaft carrying two or more 4- to 6-armed spiders, on the outer end of which circular bands are mounted on which screen cloth is stretched. The main shaft is supported in bearings at the two ends. Several methods of drive are employed. The commonest is the so-called right-angle drive illustrated in the figure, consisting of a bevel gear mounted on the end of the trommel shaft and driven by a bevel pinion on the countershaft, the latter being driven by pulley and belt or, for dry screening, where dust may prevent efficient belt drive, by sprocket and chain. Common diameters for trommels are 24, 30, 36, 42, 48, and 60 in.; lengths, 4 to 12 ft.

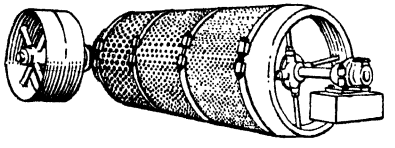

FIG. 27. Cylindrical trommel.

Split spider hubs are superior to solid. The shaft for a 24×72-in. trommel should be 2 11/16 in., increasing to about 4 7/16 in. for the 48×72-in. size. For longer screens the shaft diameter must be increased considerably. The driving shaft should be fitted with a tight-and-loose pulley. The minimum slope of the undersize chute for wet work should be at least 2 3/4 in. per ft. for 2-mm. screen. The chute should slope at least 45° for dry screening. Wash-water boxes are better than spray pipes unless the water is clean and free from salts. Water should be applied on the upcoming side. Water consumption ranges from 1 to 3.5 gal. per min. per ft. of length, the higher figures generally corresponding to fine screening. WATER CONSUMPTION in terms of tonnage of solid fed to the screen ranges from 18 gal. per ton in coarse screening to 420 per ton in 1-mm. screening.

Wiard states that POWER CONSUMPTION is about 1/4 hp. per 2-ft. length for 48-in. trommels. Holbrook and Fraser give the formula $Hp. = tons\ per\ hr./10$; also $Hp. = DL/8$ where D and L are diameter and length in feet, respectively, for a coal-screening trommel, and $Hp. = DL/4$ for stone screens working on rock or ore. For light shaft-type trommels for fine screening in concentrating mills they give $Hp. = DL/12$.

Trommels for wet screening may be set up in banks of two to four in line, with intermediate spur-gear drive, but individual drive is better.

Performances of cylindrical trommels in several mills are given in Table 23.

At WHITE BIRD (*IC 6353*) two 4×8-ft. trommels with 1/2-in. round-hole screen were in closed circuit with rolls; new feed to the circuit was 31.2 tons per hr. from primary crushers. Another 4×8-ft. trommel with 1/8-in. round-hole screen was in closed circuit with rolls recrushing rougher-jig tailing. At MASCOT (*IC 6379*) four 4×8-ft. trommels in parallel, in closed circuit with rolls, received 24.6 tons per hr. each of new feed. Screen covering was 5/8-in. round-hole on the upper half; 1/2-in. on the lower. Slope, 1 1/2 in. per ft.; speed, 15 r.p.m.

Mill trommels. Small screens of trommel type are usually attached to the discharge end of rotary grinding mills when jigs, tables, or unit flotation cells precede the classifiers; also to extract wood chips, tramp iron, etc.

At SUYOC CONSOLIDATED two such screens, 36 × 28-in. and 18 × 20-in., are used on 5×8-ft. ball mills. Covering is 3/32-in. wire, with 1/8-in. aperture; the larger lasts 60 days; smaller, 180 days. Four men spend 3 hr. to replace the larger screen, 2 hr. for the smaller. With interior sprays, undersize from the larger screen carries about 79% solids; from the smaller, about 68%. DENVER SPIRAL SCREEN is designed to improve the efficiency of such an operation. It has a spiral flight composed of a continuous steel strap, on edge, fitting closely inside the screen jacket; this accelerates passage of oversize and thus thins the bed. It is built 12- to 36-in. diam. and 18 to 36 in. long for 2 1/2- to 8-ft. mills.

Compound trommels have two or more concentric screening surfaces on the same shaft, the coarsest inside, the lengths successively less from inside to outside. They are used when several short-range products are desired from one long-range feed and headroom is at a premium.

The DISADVANTAGES are that it is necessary to remove the outer screens in order to make repairs on the inner, it is difficult to watch the inner screens for wear and blinding, and the area of the expensive fine-screen cloth is unnecessarily great.

At NEW IDRIA (*IC 6462*) a combination trommel and disintegrator was used. It was double-jacketed full length (26 ft.), each jacket comprising three sections. The inner, 48-in. diam., consisted of: (*a*) 10 ft. of high-carbon steel plate 1/2 in. thick, with 1-in. round holes; (*b*) 6 ft. of similar plate, without

Table 23. Performances of trommels

	Silver Dyke *a*		Mocte-zuma	Nevada-Massachusetts *d*		Wolf Tongue *e*	Copper Range	Walker Mine *f*		Midvale	Sulphur Bank *g*
Size, diam. × length, ft.	2 × 4	2 × 4	3 × 5 2/3	3 × 6	3 × 6	3 × 6 1/2	3 × 6 1/2	3 1/3 × 6	3 1/3 × 6	3 1/2 × 6	3 1/2 × 8
Covering: Material	3/16-in. Pl.	3/16-in. Pl.	5/16-in. Pl.	3/16-in. Pl.	Ton-Cap 23	Wire	Pl.	Pl.	Pl.	Pl.	3/4-in. Pl.
Aperture, in.	7/16 rd.	1/4 rd.	5/8 rd.	9/16 rd.	1/8 × 1/4	1/2	1/4	1 3/4 rd.	1 rd.	19/32	1 rd.
Life, tons new feed (thousands)			148				27.5			45	
Slope, i.p.f.			1 1/2			2	1			1 1/4	1
Speed, r.p.m.	21	19		19		15	18			15	18
Water, g.p.h.			1,200				12,500			0	0
New feed: Tons per hr.	2	2	25	5.7	2.9	0.7	12.5	85	42.5	20.8	12.5
Limiting size, in.	3/4	7/16				3/4			1 3/4		9
Total feed: Tons per hr.	*c*	*c*	75	*c*	*c*	*c*	15	*c*	*c*	20.8	12.5
per sq. ft. per hr.	0.08 *b*	0.08 *b*	1.4	0.10 *b*	0.053 *b*	0.011 *b*	0.25	1.4 *b*	0.68 *b*	0.30	0.14 *b*
per sq. ft. per 24 hr. per mm. of aperture			2.1				0.93			0.50	
Efficiency: % undersize in oversize			12				35			15	

	Bunker Hill & Sullivan *h*					Federal Lead	Bunker Hill & Sullivan		Wither-bee Sher-man	Mata-hambre *k*	Morenci *m*
	Sweeney			West	South						
Size, diam. × length, ft.	4 × 5	4 × 5	4 × 5	4 × 7 1/2	4 × 7 1/2	4 × 8	4 × 10	4 × 10	4 × 12	4 × 13	4 1/2 × 10
Covering: Material	Pl.	Pl.	Pl.	Pl.	Wire	23/64-in. Pl.	9/64 & 15/16-in. Pl.	Pl.	Pl.	Pl.	1/2-in. Pl.
Aperture, in.	1 × 2	9/32	19/32	1 × 2	5/8	1/8	9/32 × 1/2 *i*; 19/32 × 1 *j*	9/32 *i*; 19/32 *j*	1 1/4 × 2	1/8 rd.	3/4
Life, tons new feed (thousands)						4.75	25.5; 76.5		90		150
Slope, i.p.f.						1 1/2	1		1 3/8	2 1/2	1 1/2
Speed, r.p.m.	17	17	16	17	17	13	16.6	17.5	14	15	15
Water, g.p.h.				0		Wet	1,000		0	Wet	0
New feed: Tons per hr.	46	10.4				4.2	25	16.7	54	27	104
Limiting size, in.	2	1	1	2 1/2	2 1/2		1	5/8		*l*	
Total feed: Tons per hr.	56	41	23	73	73	10.4	35	33.3	62.5	30	104
per sq. ft. per hr.	0.89	0.65	0.37	0.78	0.78	0.10	0.28	0.27	0.42	0.16 *b*	0.74
per sq. ft. per 24 hr. per mm. of aperture	0.86	2.3	0.60	0.73	1.2	0.79	1.0	1.2	0.32		0.93
Efficiency: % undersize in oversize						40	27; 10	14; 12			

a IC 6604. *b* Undersize. *c* Closed circuit. *d IC 6280.* *e IC 6685.* *f IC 6555.* *g IC 6429.* *h IC 6314.* *i* First 7 1/2 ft. *j* Remaining 2 1/2 ft. *k IC 6544.* *l* Closes primary-grinding circuit. *m* Old mill.

perforations, but provided with lifting and tumbling baffles; (c) 10 ft. of 3/8-in. plate with 1-in. holes. The outer jacket, in corresponding sections, was composed of: (a) wire screen with 1/2-in. openings: (b) 3/16-in. plate, unperforated; (c) 3/16-in. plate with 9/16-in. holes. Run-of-mine ore (except some >4-in. hand-picked waste) was thus separated into: >1-in. for picking belt, 1 1/2-in. for furnace, <1/2-in. to a classifier yielding coarse for furnace and fines for flotation. Slope was 1 1/4 i.p.f.; speed, 12 r.p.m.

Conical trommels are made with and without a through shaft. The latter type, called the Gilbert screen, has had considerable use, particularly in gravel-washing plants.

The ADVANTAGE of the conical trommel is that the axis may be set horizontally, when the inclination of the screening surface necessary to cause travel of material is obtained by the conical shape. It is also economical of headroom. The open-end type has ample space for feeding through the discharge end, but it is necessary that the feed be carried in suspension in water. Chief DISADVANTAGE is the complicated pattern to which the screen fabric must be cut and fitted.

OLIVER IRON MINING CO. employs a conical trommel 20 ft. long by 8-ft. large and 4-ft. small diam. giving an effective slope of 1.2 i.p.f. Covering is 1-in. steel plate with 2-in. holes. Speed, 12 r.p.m. with e… of-mil… wet at 15,600 tons per 24 hr., equivalent to 1.7 tons per sq. ft. per hr., or 0.81 ton per sq. ft. per 24 hr. per mm. of aperture. Water consumption, 32,820 gal. per hr. (*O*). Fig. 28 illustrates two installations of conical screens in gravel-washing plants. That (*A*) of the ATLAS SAND, GRAVEL & STONE CO. (*IC 6676*) contains two parallel banks of three screens each, all driven at 20 r.p.m. through gears, sprockets, and roller chains, from a 15-hp. motor. Most of the feed has previously passed a 2 1/4-in. vibrating screen, but some unsized product of a jaw crusher set at 2 1/4 in. is included, and accounts for the oversize product of the 2 1/2-in. round-hole trommel. Total feed to each bank is 33 tons per hr. Water in a 4-in. stream enters with feed, and additional water is applied inside each screen by a spray pipe; total water for three screens, 250 g.p.m. Entire weight of each screen and its load is carried by the cast-iron head at the small end; this is supported on a 4-in. shaft 10 ft. long, and carries four 6×6-in. angles to which the jackets are attached, 6 in. apart. Average life of screen is about 150,000 tons. Plant (*B*) of the DALLAS GRAVEL CO. (*IC 6581*) has three conical screens all mounted on the same shaft and rotated at 10 r.p.m. by connection, at upper end, with a 50-hp. motor (which also drives the elevating conveyor). Feed has all passed a 6-in. grizzly, and includes recrushed (gyratory) oversize product of the first trommel. Oversizes of the second and third trommels are usually subdivided for market on vibrating screens at 1 1/2, 1 1/4, 1, 1/2, and 5/16 in. Average life: No. 1, 300,000 tons; No. 2, 200,000; No. 3, 75,000.

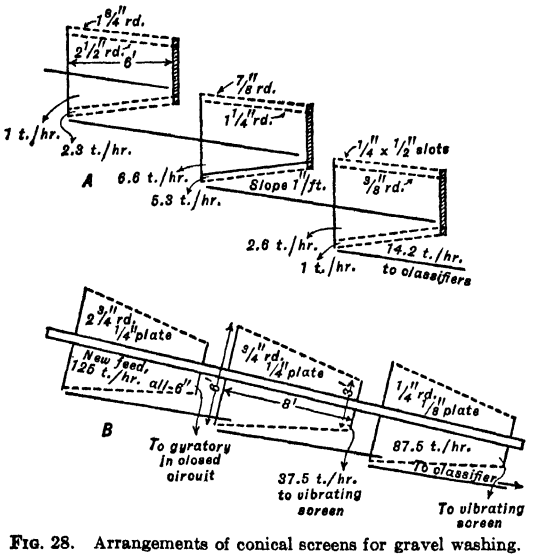

FIG. 28. Arrangements of conical screens for gravel washing.

Prismatic trommels, usually hexagonal, have been used to a considerable extent in fine screening. The sides may have their elements parallel, in which case the axis is set on a slope, or pyramidal with the axis set horizontal. The screening surface consists of a number of plane sections. This makes for ease in mounting and changing screen cloth, as the cloth is mounted on separate wooden frames that bolt onto the main screen frame. Cloth may be shipped flat, is lighter to handle than that for a cylindrical trommel, being in smaller pieces; and the amount of screening surface that need be replaced for a break in the screen is only one-sixth of the total.

Comparison of round and hexagonal trommels for fine screening was made at DESLOGE CONSOLIDATED (*94 J 833*). The feed was undersize of a 10-mm. trommel and it was desired to remove material that would pass a 1-mm. opening. Comparison was between a round trommel of the conical type, 8 ft. long with diameters 3 and 4 ft., slope 3/4 i.p.f., speed 20 r.p.m.; and a hexagonal trommel 8 ft. long, pyramidal shape, large diam. 4 ft., small diam., 3 ft., speed, 20 r.p.m. Pulp in falling from one face of the hexagon to the other dropped 14 in. Screening surface used on both trommels was punched plate, 22-gage steel, 1-mm. round holes on 2.5-mm. centers. Outside spray was used on both. Feed rate,

both trommels, was 150 tons per 24 hr. Duration of the test was several weeks. Results were as follows: Material finer than 1-mm. in oversize; conical trommel, 7.0%; hexagonal trommel, 4.8%. Life of screening surface: conical trommel, 7.1 days, 1,065 tons; hexagonal trommel, 12.8 days, 1,927 tons. The experimenter calls attention to the fact that the difference in life of screening surfaces is due to the fact that the interior rings of the conical trommel caused pulp to back up behind them and that the greater weight of pulp sliding around at these points caused the screens to wear through. The higher efficiency of the hexagonal trommel was due to greater turnover of pulp.

Revolving stone screens, as distinguished from trommels, have no central shaft but are mounted on tires and rollers at both ends, or one end is so mounted while the other end carries a heavy head and gudgeon (Fig. 29*b*). On account of the slope, guide rollers are required, bearing against the low side of one of the tires. This type of screen is used mainly for coarse screening and less frequently in ore-treatment than in stone-crushing plants; but it is practically the only type found on American dredges (Sec. 2, Art. 21). The screen

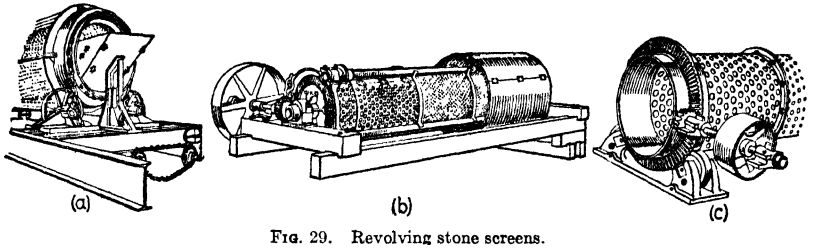

FIG. 29. Revolving stone screens.

frame consists of heavy cast heads with four or more longitudinal members connecting the heads and forming with them a strong truss. The screening surface is attached to the through members. The best arrangement is one in which the screens are in sections, each section bolted in between two adjacent through members as shown in Fig. 29*b*. Commonly stone screens are sectional (Fig. 29*b*), *i.e.*, plate or cloth sections have successively coarser aperture from feed to discharge end. Not infrequently, also, they are compound at one end. Right-angle drive is usual, but some forms are chain-driven by a sprocket bolted to the feed- or discharge-end casting (Fig. 29*a*). The frame is sometimes built to carry a grid of heavy rods on the inside surface, parallel to the axis, with an aperture larger than the coarsest screen. This rides the largest lumps through the screen out of contact with the screening surface and thus protects the latter. Table 24 gives sizes and weights by one manufacturer.

The principal DISADVANTAGE of this type of screen is the fact that all the coarse material must pass over the finest plate, which is thereby subjected to excessive wear. This difficulty may be obviated, although at the expense of headroom, by passing the original feed first to a heavy screen of intermediate size, each product of this screen then going to a separate sectional screen having suitable cloth. The same effect is obtained by compounding, subject to the disadvantages previously mentioned.

Performance. See Table 25. See also Sec. 2, Art. 21.

Table 24. Revolving stone screens (*Traylor Engineering Co.*)

Size	Capacities, tons per hour, 3-in. perforation		Horsepower	Revolutions per minute, screen	Weight, lb.
	Scalper *a*	Sizer *b*			
In. Ft.					
24 × 6	20	9	3	26	3,000
24 × 12	45	20	4	26	3,700
32 × 8	40	18	4	22	5,150
32 × 14	80	35	5	22	6,300
40 × 10	65	30	8	18	7,950
40 × 20	135	65	12	18	10,700
48 × 12	100	45	10	16	13,000
48 × 20	180	85	14	16	15,650
60 × 12	120	55	12	14	21,000
60 × 24	250	115	18	14	28,000
72 × 14	180	85	16	12	30,000
72 × 24	300	150	20	12	40,000
84 × 16	250	125	20	10	40,000
84 × 30	500	250	25	10	52,000

a As guard screen on a crusher. *b* For clean oversize.

Until 1931, the screening equipment of the N. Y. Trap Rock Corp., at Clinton Point, included four stone screens with inner walls 4 × 16 ft., 3 1/4-in. round holes, and outer jackets 6 × 16 ft., 2 1/4-in. round holes. Each screen had a 25-hp. motor. Maximum feed rate was 500 tons per hr. Screening efficiency was unsatisfactory (*54 & 9 RP 65*). For results after substitution of Gyrex vibrating screens, see Art. 7.

Table 25. Cylindrical

Plant, location, and material	Type	Slope, i.p.f.	Speed, r.p.m.	Power, hp.	Water, g.p.m.
Seaboard Sand & Gravel Corp., Port Jefferson, N. Y., Gravel (*IC 6592*)	C	1 1/2	13	25	*e*
	C	1 1/2	14	40	*e*
Consol. Rock Prods. Co., Durbin, Calif., Gravel (*IC 6607*)	T	1 1/2	15	25	.....
	S	1 1/2	15	15	.....
	T, C	.....	14	20	350
	T, C	1 1/2	15	20	.....
Graham Bros., Santa Catalina Is., Calif., Rock (*IC 6609*)	C	1 1/2	12	15	Dry
	C	1 1/2	12	15–20	Dry
Ft. Worth Sand & Gravel Co., Ft. Worth, Tex., Gravel (*IC 6652*)	T, C	5/8	30	.....	1,200
Western Indiana Gravel Co., Lafayette, Ind., Gravel (*IC 6692*)	T, C	1 1/4	12	20	1,200
	T, C	.....	11	15	.....
	S	1 1/4	9	15	.....
	T, C	1 1/4	14	10	400
Weston & Brooker Co., Cayce, S. C., Granite (*IC 6744*)	S	1 1/4	13	30	Dry
	T, C	1 1/4	16	20	1,200

a Crusher setting.
b Concentric with 1/2-in. segment.
c Concentric with 3/4-in. segment.
d Reinforced outside by a plate with 2-in. holes.
e Screens fed by suction dredge; copious water.
f In closed circuit with crusher; all ultimately passes 2 1/2-in.

Variables in construction and operation of revolving screens are speed, slope of screen axis, aperture, percentage of oversize in feed, percentage of moisture in feed, rate of feed, and diameter, length, and character of screening surface.

Speed affects capacity and efficiency. Increase in speed up to the point where material is carried completely around by centrifugal force causes increase in capacity. Efficiency, however, passes through a maximum at a speed which, roughly, causes the load to ride about one-third the distance to top of the screen.

Results of a test on a 36-in. trommel with varying speed (*98 J 305*) are given in Table 26 and Fig. 30, showing, for this size, maximum efficiency at 16 r.p.m. Since efficiency and not capacity is the end sought in most screening operations, this speed, or one slightly greater, is the one that should be and is commonly used in practice for this size of trommel.

stone screens, roller-mounted

Section No.	Diam. × length, ft.	Thickness, in.	Aperture, in.	Max. size feed, in.	Tons per hr. Over	Tons per hr. Through	Life
			Individual sections				
1	5 × 16	*Mn* Pl.	1 7/8 rd.	.....	}	{	1,400,000 cyd.
2	? × 16	1/4-in. *Mn* wire	1/2 sq.	1 7/8	.....300.....		1,200,000 cyd.
3	? × 16	Wire	1/8 × 5/8	1/2	}	{	180,000 cyd.
1	5 × 20	Pl.	1 1/4 rd.	1 7/8	}	{	375,000 cyd.
2	? × 20	Wire	7/8 sq.	1 1/4	.....200.....		250,000 cyd.
3	? × 20	Wire	3/8 sq.	7/8	}	{	250,000 cyd.
1	4 × 12	1/2 *HCS*	3 rd.	.....	.....	430	4 mo.
2	4 × 6	"	4 1/2 rd.	.....	60	.....	8 mo.
	4 × 14	1/2 *HCS*	2	2 1/2 *a*	.....130.....		9 mo.
1	4 × 12	5/16	1/2 rd.	2	52.5	12.5	8 mo.
2	4 × 10	3/8	1 1/8 rd.	2	15	37.5	13 mo.
3	4 × 6	1/2	2 rd.	2	1	14	20 mo.
4	5 × 11 *b*	1/8	3/16 rd.	1/2	7.5	5	12 mo.
1	4 × 12	5/16	3/4 rd.	3	60	95	4 mo.
2	4 × 8	3/8	1 1/4 rd.	3	45	15	7 mo.
3	4 × 8	1/2	1 3/4 rd.	3	25	20	10 mo.
4	5 × 11 *c*	1/4	5/16 rd.	3/4	35	60	5 mo.
1	5 × 16	1 *Mn*	5	8 *a*	.....	.....	400,000 tons
2	? × 8	.....	1 1/2	5	.....	.....	.....
1	4 × 24	3/4	1 1/2 rd.	1 1/2 *a*	.....	.....	10 mo.
2	? × 12	1/2	1/2 rd.	1 1/2	.....	.....	.....
1	6 × 5	.....	None	3	.....	None	.....
2	6 × 15	1/4	3/8 rd.	3	.....	.....	1 yr.
3	6 1/2 × 15	Wire	1/8 sq.	3/8	.....	.....	6 mo.
1	5 × 12 3/4	.....	1 3/4 rd.	9	42	158	10 mo.
2	5 × 2.9	.....	2 1/2 rd.	9	30	12	10 mo.
3	5 × 3	.....	3 rd.	9	20	10	10 mo.
4	6.19 × 11	.....	5/8 rd.	1 3/4	16	142	100 da.
5	7 1/4 × 10	.....	5/16 rd.	5/8	22	120	100 da.
1	4 × 8 1/2	1/2	1 1/4 rd.	1–1 1/2 *a*	10	20	10 mo.
2	4 × 3 1/4	1/2	2 rd.	1–1 1/2	10	None	10 mo.
3	5 1/2 × 7	3/8	3/4 rd.	1 1/4	8	12	3 mo.
4	6 × 6	1/4	1/4 rd.	3/4	2	10	3 mo.
	4 × 16	.....	1/8 × 5/8 *d*	5/16	.....120.....		1 mo.
1	3 1/3 × 6	.....	None	2 1/2	..... 75.....		1 yr.
2	3 1/3 × 10 1/2	.....	3/8 rd.	2 1/2	..... 75.....		.....
3	? × 8	.....	1/4 rd.	3/8	.....	.....	10 mo.
	7 × 12	9/16 *HCS*	2 1/2 rd.	2 3/4	27 *f*	81	.....
1	5 × ?	1/4	3/4 rd.	2 1/2	50	58	.....
2	5 × ? *g*	1/4	1 rd.	2 1/2	36	14	.....
3	5 × ?	1/4	1 1/2 rd.	2 1/2	23	13	.....
4	5 × ?	1/4	2	2 1/2	9	14	.....
5	6 2/3 × 21	5/16	3/8	3/4	23	35	.....

g Combined length 40 ft.
C Compound or concentric arrangement.
S Single cylinder with uniform aperture.
T Tandem arrangement of segments in same screen.
Mn Manganese-steel.
HCS High-carbon steel.

Tables 23 and 25 show speeds of revolving screens in operation. Usual speeds range between 35 and 40% of theoretical critical (see Sec. 5, Art. 2).

Slope of a trommel affects the rate of travel through the screen, and for a given tonnage determines the thickness of the bed. This factor in turn influences efficiency, the thinner the bed the greater the opportunity for a particle to gain access to an aperture. Within limits, increase in slope increases efficiency and capacity. Old practice used slopes of 0.5 to 0.75 i.p.f.; present practice averages about

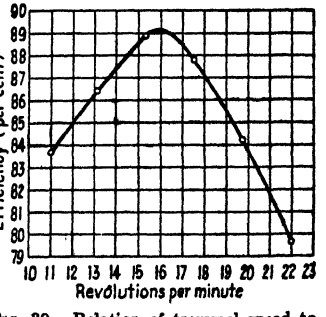

FIG. 30. Relation of trommel speed to efficiency. (Data in Table 26.)

1.5 i.p.f. in ore treatment, with maximum of about 3 i.p.f. According to Holbrook and Fraser, 5° is standard slope for punched-plate trommels in coal treatment and slightly more for woven wire.

Table 26. Relation between speed and efficiency of trommel *a* (*After Roesler*)

Test number	1	2	3	4	5	6
Speed, r.p.m.	22.0	19.8	17.6	15.4	13.2	11.0
Diam. of drive pulley, in.	10	9	8	7	6	5
Oversize						
Per cent. on 1/2-in.	64.3	67.8	74.5	75.3	73.4	66.9
Per cent. through 1/2-in.	35.7	32.2	25.5	24.7	26.6	33.1
Feed						
Per cent. on 1/2-in.	26.9	25.1	26.2	25.3	27.4	24.9
Per cent. through 1/2-in.	73.1	74.9	73.8	74.7	72.6	75.1
Efficiency, per cent	79.6	84.2	87.8	88.9	86.4	83.7

a Diameter, 36 in. Length, 12 ft. Slope, 1 1/4 in. per foot. Perforations, 1/2-in. round holes, punched on lines intersecting at 60°. Percentage of opening, 40.3. Rate of feed, 22 to 24 tons per hr. Speed, 11 to 22 r.p.m. (Data plotted in Fig. 30.)

Diameter of a trommel determines the thickness of the bed; the greater the diameter the thinner the bed. It is not advisable to use trommels less than 36 in. diam. on account of the difficulty of changing screens and making other repairs. The majority of trommels range from 36 to 48 in. diam. H. G. Smith (*47 MM 20*) offers the formula: $D = 7.66\sqrt{W/d}$, where D = diam., in.; W = desired capacity, tons per hr.; d = approx. sp. gr. of material, as fed (about 2.0 for most siliceous or carbonate ores).

Length affects efficiency of screening, increased length resulting in more complete removal of fines. On the other hand, most of the screening is done in the first 2 ft. Present practice inclines to steep slopes and short lengths. *Truscott* gives 5 to 15 ft. for one separation, the longer for finer materials, but few trommels exceed 10 ft. Stone screens are longer.

Capacity increases with increase in diameter, speed, slope, and size of aperture, with decrease in percentage of difficult oversize in the feed, and is greater in wet than in dry screening. For dry screening, it averages 0.6 ton per sq. ft. per 24 hr. per mm. of aperture, and for wet screening, 1.0 ton. *Wiard* gives the rule for capacity of 48-in. trommels in open circuit, $C = 20\ d$ for round-hole punched plate and $C = 25\ d$ for square openings, where C = tons per 24 hr., d is the aperture in mm., and the feed contains 50% oversize. With a greater percentage of oversize, capacity will be greater to an extent substantially equal to the tonnage of excess above 50% oversize. Deduct 15% from the above capacities for each 6-in. decrease in trommel diameter. *Truscott's* figure is 0.5 ton per 24 hr. per sq. ft. per mm. of aperture. Holbrook and Fraser give the rule for capacity on coal that 3 to 4 sq. ft. of screen surface is required per ton per hr. per in. of aperture, with an increase of 50% in the area required if the coal is damp.

Efficiency. Average oversize from coarse (>0.5-in.) dry trommels contains about 15% undersize, while that from fine (<0.25-in.) wet trommels contains about 30%. Efficiency reckoned as percentage recovery of undersize may run as high as 80% in 1/2-in. dry trommels. In wet trommels 45 to 70% is the usual range, but the figure may drop to 10% or lower when there is much material in the feed near the size of the screen opening and the trommel is overloaded.

Life of covering on trommels is given in Table 23 and for that on stone screens in Table 25.

ADVANTAGES of trommels are simplicity in construction and operation, freedom from vibration, small loss of headroom, cheapness, and general ruggedness. DISADVANTAGES are blinding, difficulty of repair, low capacity per square foot of screen surface, and low efficiency.

6. SHAKING SCREENS

Description. Shaking screen consists essentially of a shallow rectangular box two to four or more times as long as wide, open at one end, fitted with a screen bottom and shaken by means of a suitable mechanism which alone, or in conjunction with the slope of the screen surface, moves oversize to the discharge end. The method of support of the frame and the means of shaping vary considerably. In the oldest and simplest form the frame is

supported on four vertical rods or chains at the corners and is actuated by an ordinary eccentric, producing a substantially straight-line harmonic motion; the screening surface must then be given a slope of 10 to 15° in order to move material, or the forward stroke must be ended against a bumping block, resulting in excessive rack and vibration on the screen frame and supports. By inclining the supporting rods backward from the vertical at an angle of about 15° (FERRARIS SUPPORT), the motion of the screen surface is upward at the end of the forward stroke and sharply downward at the beginning of the backward stroke, with the result that the screen drops away from under the load and the material moves ahead with a series of jumps. This motion is accentuated by shortening the suspending or supporting rods. The same effect, even more sharply accentuated, can be obtained by mounting the screen frame on rollers and shaping the track to give a sharp upward movement at the end of the forward stroke. Occasionally, with track support, the track is also turned up at the end of the backward stroke, in order to give some backward travel of the material and thus increase the length of path and multiply opportunities for undersize to pass. Table head motions which impart a differential, quick-return movement are suitable only for relatively short strokes (1.5 in. or less) and relatively small screens. With mechanisms producing differential movement the screen surface need be inclined only slightly or not at all in the direction of flow. For design and operation of shaking screens in coal preparation, which is now almost the only field for the simple types as above described, see Vol. II.

Speed, slope and length of stroke should be adjusted to produce rapid stratification of the feed, quick forward movement of the load, and minimum blinding. If speed or length of stroke is too great, material is thrown bodily away from the screen surface and stratification is effected slowly, if at all. On the other hand, if there is too little throw, the screen blinds badly. Slope is adjusted so that with a proper speed and length of stroke there is sufficient throw of material away from the screen surface to prevent blinding. Speeds in practice range from about 60 or 70 @ 9-in. strokes per min. to about 800 @ $^3/_4$-in. strokes. If there is any considerable amount of lost motion or backlash in the eccentric or suspending mechanism, the action of material on the screen may be entirely different from that with the same mechanism with no backlash. Suspending rods made of ash boards, 1- by 10- or 12-in. in section, attached rigidly at both ends, are very durable and have a tendency to reduce backlash.

Capacity ranges from 2 to 8 tons per sq. ft. per 24 hr. per mm. of aperture. In desanding pebble phosphate 15 to 20 tons per sq. ft. per 24 hr. per mm. of aperture is sent over $^3/_{64}$-in. screens in a 3-in. bed with 400 to 500 g.p.m. of wash water, but the screening is not efficient. Wiard (*Liddell*) gives a formula that reduces to $T = AR/6P$ as a maximum theoretical tonnage for shaking screens where T = capacity in tons per hr. per ft. of width; A = average between screen aperture and preceding limiting-screen aperture, expressed in feet; R = rate of advance of material over the screen in in. per min. = shakes per min. × amplitude of shake; and P = ratio of weight of oversize to total feed.

Applicability. Shaking screens are used to the greatest extent in coal preparation, where they have substantially displaced all other types, and in treating certain nonmetallic ores such as phosphate and asbestos. They are used both wet and dry, but consume excessive amounts of spray water when used wet. Many attempts have been made to set the screen so that it moves up and down through the surface of a body of water, but this involves mechanical removal of undersize, which has not proved successful. Shaking screens are not suitable for treating clayey ores on account of the readiness with which clay balls form on them.

The principal DISADVANTAGE of shaking screens is the high repair cost due to rack and vibration. This applies not only to the screen itself but to the supporting structure. In order to minimize the effect on the structure two screens are frequently mounted on opposite sides of the same drive shaft with eccentrics at 180°. Even this is insufficient, however, to balance the load because of the difference to be expected in load of material on the two screens at any given instant; hence many designers make the shaking-screen support independent of the building frame, in order to localize vibration and not rack the entire building. Lubrication is difficult.

Symons horizontal screen employs the Ferraris principle of inclined, flexible supports, with modifications designed to reduce unbalanced vibration. The horizontal screen box is supported, at four places on each side, by springs composed of two or four thin steel blades, the four-blade springs being at the ends of the box. All springs are rigidly fastened at both ends, to the screen box above and to a foundation frame below, and all lean, at 30° from vertical, toward the feed end. The resultant motion of the screen surface, upward on the forward stroke, thus causes the feed to travel toward the discharge end. Motion is supplied by a rotating, horizontal shaft across and beyond the discharge end, having two eccentric shoulders; the collars on the eccentrics are flexibly connected (by horizontal blade springs) to the screen box. The main bearings on the outer ends of the shaft rest upon the ends of two long horizontal bars parallel with and outside of the screen box and supported on inclined blade springs in

Table 27. Performance of Symons horizontal shaking screens (Q)

	Climax, Colo.	San Francisco de Mex.
Screen: Width × length, ft.	5 × 9	3 1/2 × 10
Material	Steel rods	Ty-Rod
Diam. of rod or wire, in.	1/4	0.177
Aperture, in.	5/16	5/8 × 4
Life, days	.....	14
Replacement, 2 men, hr.	.....	1/2
Blinding	.....	*b*
Speed, s.p.m.	825	790
Amplitude, in.	3/4	3/4
Power, hp	7 1/2 *i*	5 *i*; 3 *c*
Drive	V-belt	Tex-rope
Feed: Size	<2 in.	Cone prod. *a*
Per cent. moisture	2–3	2
Tons per hr.: New	42	100
Total	105	150
Effect of moisture on capacity	Serious	None
Feeding method	48-in. belt	Conveyor

a >3/4 in., 7.7%; 3/4~1/4, 67%; 1/4-in.~10-m., 8.6%; <10-mesh, 16.7%.
b Screen cleaned once in 8 hr.
c Power consumed.
i Power installed.

exactly the same manner on the screen box; the other ends of these bars carry a feed box. Vibration induced by the eccentric rotation is thus divided between the screen box and the outside bars and is practically neutralized. Single- and double-deck screens are 36, 42, and 48 in. wide by 6, 8, 10, 12, 14, 16, 18, and 20 ft. long; triple-deck (same widths), 8, 10, and 12 ft. long; a single-deck 24 in. × 6 or 8 ft. is also available. Over-all length (incl. motor) is about 53 in. plus screen length; over-all width, 23 to 26 in. plus screen width; height of feed box above floor, 40 to 43 in. for single- and double-, and 52 in. for triple-deck screens. For performance see Table 27.

Table 28. Feed and products of Cole screen at Cananea

Mesh	Feed	Oversize	Undersize
3-in.	14.2	29.4	.....
2	15.6	25.3	.....
1	22.9	20.2	.....
1/2	10.8	11.9	21.6
3-m.	9.9	3.4	16.2
4	3.1	1.4	9.1
8	5.2	1.8	13.0
14	4.0	1.3	10.1
48	5.2	1.9	11.9
100	2.0	0.8	4.0
200	1.2	0.6	2.3
<200	5.9	2.0	11.8
	100.0	100.0	100.0

Cole screen has a slightly sloping deck supported on four inclined legs (Ferraris principle) and oscillated by two pitmans driven from eccentrics, thus producing an upward movement on the forward stroke. Legs and pitmans are all attached to the screen frame through flexible rubber wrists. Such a screen at CANANEA (*IC 6261*), with 44 × 49 in. of double-crimped cloth (1/4-in. wire, 1-in. opening) received 2,600 tons per day of product from a gyratory crusher set at 3 1/2-in. max.; speed, 430 s.p.m. Table 28 gives sizing analyses of feed and products, showing 25% of undersize remaining in oversize.

VIBRATING SCREENS

In recent years, vibrating screens have largely displaced trommels and shaking screens, owing chiefly to their larger capacity per unit of screen area and floor space and lower cost of operation and upkeep per ton screened. Their field ranges from 10-in. to 100-m. aperture, wet or dry; in the finer sizes thay have been substituted at several mills for mechanical classifiers, and in coarse sizes for grizzlies. In industrial screening they have been used down to 200-m. wet and 325-m. dry, but even the manufacturer concedes that air classifiers (Sec. 9) are superior in the latter field. As substitutes for grizzlies they save headroom and floor space, make a cleaner cut, blind less, and serve also to equalize rushes of feed to a certain extent. The modern eccentric-drive machines, with rubber-floated bearings to cushion the shocks caused by unbalancing from heavy fluctuating live loads, can handle feed lumps of several hundred pounds by using protective grids (see p. 31). See the different types for their special size fields.

Vibrating screen consists essentially of a substantially plane screening surface, usually stretched taut, more or less inclined, and caused to vibrate with small amplitude and comparatively high frequency. The screening surfaces, single up to 4-deck, are set as diaphragms in a rectangular frame having suitable side walls to confine flow (screen box). Sizes, which are stated as deck dimensions, range from 1 1/2 × 3 ft. to 6 × 16 ft.

Types. Vibrating screens are available under a bewildering variety of trade names. Fundamentally, however, there are only two types, (*a*) those in which points in the screening surface reciprocate over substantially rectilinear paths, and (*b*) those in which the paths are closed, either nearly circular or pronouncedly elliptical in general outline. In both types the path lies in a plane or substantially plane surface parallel to the side walls of the screen box. Motion along the paths is nonuniform in most cases; in the impact types reversal is sudden.

Vibrating mechanisms are electrical or mechanical; their impulses are applied directly to the screening surface, or, in most cases, to the screen box. Electrical mechanisms are all a.-c. electromagnets, with or without mechanical expedients such as stops or interposed resilient elements to amplify and/or intensify the vibrational effects. Mechanical methods comprise hammers, cams, eccentrics, gyrators, and various combinations of these mechanisms. More detailed descriptions follow in connection with specific machines.

Impulse and restraint. The force applied to the particles on a vibrating screen is a resultant of the impulse of the mechanism on the screening surface or the frame, the restraints opposed to this impulse by the screen structure, and the further restraints imposed by gravity acting on the screen structure and on the material on the screening surface. The magnitude of the initial impulses depends upon the power supplied and the way in which it is converted to force at the points of application. The impulse on the screening surface depends upon the type and strength of the constraints to motion brought into play between the point of application of the applied force and the screening surface.

Intensity of vibration is a function of length of path and rapidity of reversal. Ordinarily it is expressed simply as the product of the length of projected path at right angles to the screen frame and the frequency, which is to say, the cumulative linear travel in one direction at right angles to the screen surface per unit of time. Thus a screen surface making 1,000 v.p.m. along a circular path $^1/_{16}$ in. diam. would be said to have an intensity of 62.5 (in. per min.). But the actual intensity of such vibration, assuming uniform motion along the path, would be greater if the path were elliptical, with $^1/_{16}$ in. the major axis, and at right angles to the screen surface, and the relative increase would be greater the larger the ratio of major to minor axis of the ellipse. The intensity would be much greater with a linear path of the same projected length if there were any substantial approach to uniform motion along the path; and it becomes a maximum when a linear path is stopped by a sudden impact. No method has been devised for numerical quantification of the intensification due to rapid reversal.

Particle movement on and over the screening surface is the resultant of gravity and the force exerted on the particles by the surface. With most screens gravity is the primary force and the screen surface is inclined to such an extent (20 to 40°) that a very slight impulse from the surface is sufficient to make the particle progress down slope. The ideals in particle movement are rapid translation, which makes for high capacity; continuous contact with the surface, which insures repeated presentation to openings; turnover, which causes ever changing orientation of the presented particles; and ejection, or outthrowing of particles incapable of passage through an aperture, in order to give other particles access to that aperture and to give the ejected particle opportunity to present itself differently to another aperture.

Rapid translation is obtained by steep slope and/or high intensity of vibration. Speed should not, however, be so high as to cause the load to bound across the surface, since such progression defeats the other purposes of particle movement by preventing access to apertures.

Continuous contact is attained by decreasing the slope and by increasing the load passing over the surface. The decreased slope of itself decreases the length of screen surface passed over in one bound caused by an impulse of a given intensity, and the increase in load reduces the freedom of particles to respond to impulses by leaving the surface.

Turnover is effected to a certain extent by opposition of the rough surface of the screen fabric to the forward flow of particles in contact with it. It is accentuated, however, with closed-path motion, by having the upper portion of the vibratory path directed toward the feed end of the screen (COUNTERFLOW).

Ejection is best effected by impact at the end of the upward stroke. Failing this, it is probably next-best attained by an acutely elliptical path with as nearly as possible uniform motion along the path.

7. OPEN-PATH (RECIPROCATING) VIBRATORS

These were the earliest type, representing the first departure from trommels. The pioneer forms comprised mechanical hammers applied to fixed inclined screens. An a.-c.

magnetic hammer was used on Rowand screens (p. 27). In the early impact screens the screen frame, with inclined screening surface, was lifted by cams and dropped. Modern forms utilize either mechanical or electrical means for the primary impulse and may additionally make use of gravity or the restoring force of a spring for return.

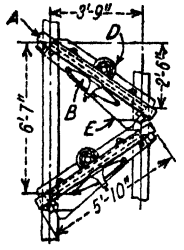

FIG. 31. Colorado impact screen.

Mechanical Impact Types

Colorado impact screen (Fig. 31) consists essentially of the frame *A* which carries the screen cloth and an undersize hopper *E*, mounted on two elliptical wagon springs *B* which are fastened to the supporting frame. A pulley-driven shaft carrying multiple-armed cams *D* is also mounted on the supporting framework. Revolution of the cam depresses the screen frame, which, on release, springs forward against bumping blocks on the framework. The usual speed is about 600 knocks per min. The screen surface is set at a slope of about 40° from the horizontal. Screens may be superimposed, as shown in Fig. 31. Average capacity per square foot of screen surface per 24 hr. at 1-mm. aperture is about 5.5 tons for dry screening and about 20 tons for wet screening. An efficiency test on impact screens at RAY CONS. COPPER CO. is shown in Table 29.

Table 29. Efficiency of Colorado impact screens at Nevada Consolidated Copper Co. (Hayden Div.)

Aperture, inch	Character of feed	Tons per 24 hr.	Undersize in feed, per cent.	Undersize in oversize, per cent.	Efficiency, per cent. *c,d*	Efficiency, average per cent.
0.086	*a*	73	30.8	15	60.8	68.3
0.086	*b*	465	55.8	49.3	22.9	29.1

a Original mill feed, open circuit.
b Original mill feed, plus oversize from rolls.
c One test.
d Recovery of undersize.

A modified (DUCKWORTH) type of Colorado impact screen is employed in both mills of the UTAH COPPER CO. At MAGMA it receives the undersize of a 2-in. grizzly following the primary gyratory crusher; at ARTHUR it is used in the same way, and also in closed circuit with rolls for intermediate wet crushing. Table 30 gives operating data.

Table 30. Impact screens in mills of the Utah Copper Co. (*Q*)

	Magma	Arthur	Arthur
Screen: Width × length, in.	48 × 72	66 × 75	35 1/2 × 45 1/2
Slope, deg.	40	30	30
Diam. of steel wire, in.	5/16, 5/8	3/8	0.08
Aperture, in.	1 × 2	1 × 2 1/2	5 × 10-m.
Life, days	20	20	6.8
Replacement: Men	4	4	2
Hours	1	1	0.1
Blinding	Slight	Slight	Slight
Speed, v.p.m.	720	720	532
Amplitude, in.	1	1	3/4
Power installed, hp.	5	5	
Drive	Reduction gear	Red. gear & belt	Belt from roll shaft
Feed: Limiting size, in.	2	2	3/4
Per cent. moisture	5.03	4.9	28.5
Tons per hr.: New	375	417	19.6
Total	375	417	73.3
Tons per sq. ft. per hr.	16	13.5	8.4
Tons per 24 hr. per sq. ft. per mm. of aperture	14.8	12.8	72.4
Effect of moisture on capac.	Reduces	Reduces	
Feeding method (no bins)	*a*	*a*	Elevator
Water consumed, g.p.h.			7,820
Lost time: Per cent.	*b*	2	2.46
Chief cause		Wear	Repairing rolls
Per cent. undersize in oversize			24

a Undersize direct from grizzly, latter fed by conveyor.
b Cloth changed while repairing rolls.

Leahy-No-blind screen is vibrated by impacts applied to a cross bar at its mid-length. Fig. 32 is a cross-section of the vibrating mechanism, which is mounted on a bridge spanning the top of the screen box. The 8-pointed cam *a* is keyed to the shaft *b*, which rotates usually at 200 r.p.m., giving 1,600 v.p.m. The cam engages a hardened-steel button under the inner end of the tappet *c*, the outer end of which presses on the upper end of rod *d*. The lower end of this rod (not shown) is attached by a yoke to the cross bar of the screen. The rod is forced upward by the helical compression spring *e*, stress in which is adjusted by nut *f*. With perforated plate, spring compression need be only about one-half of that desirable with woven-wire screen. The profile of the cam is such that the down stroke occupies 81.4% of the tappet cycle; the upstroke ends with a knock which, together with the quick upstroke, activates the screen load and tends to prevent blinding. Usual amplitude of vibration is 1/8 in.

The cam runs in oil, and its shaft may be driven by belt and pulley from a countershaft or by direct-connected motor mounted on the bridge; power consumed is about 1/2 hp. The screen box is hinged at its lower end and its tilt, usually 28 to 35°, is adjustable by a pair of ratchet bars and pinions supporting the high end. The longer screens usually have two vibrators connected by sprocket chain. In the TRI-VIBE model there are three vibrating cross bars, at the quarter-points, connected both ends by longitudinal side bars; impact is applied only to the middle bar and is transmitted to the others by the side bars.

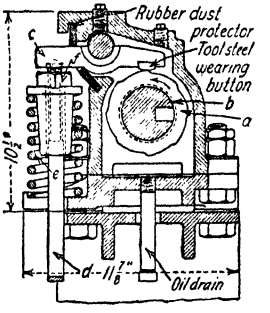

FIG. 32. Vibrator for Leahy screen.

Performances. A 3×5-ft. screen at the RICHARD MILL, with 0.194-in. square aperture, at 35° slope, and 200 r.p.m. handled 28 tons of magnetite ore per hr. through 3/4-in. round-hole plate, with 3 to 5% moisture, at an efficiency of 92%. With less than 1% moisture the efficiency rose to 98.5%. At IRON MOUNTAIN, a similar screen handled 19 tons per hr. of wet hematite ore with an efficiency of 99.6% and was underloaded. H. M. Roche (*PC*) believes that the screen could have handled 38 to 40

Table 31. Performance of Leahy screens at Flat River (*IC 6658*)

	Dry screens		Wet screens	
Material screened	Roll product		Rod-mill product	
Screen: Width × length, in.	45 × 48		28 × 55	
Slope, deg.	34 1/2		31 1/2	
Aperture, in.	0.17		0.12	
Wire diam., in.	0.08		0.08	
Life, da.	16		16	
Pulley speed, r.p.m.	189–203		197–239	
Speed, v.p.m.	1,512–1,624		1,576–1,912	
Amplitude, in.	1/8		1/8	
Tons: Per hr. per screen	107		35.4	
Per hr. per sq. ft.	7.1		3.3	
Per sq. ft. per 24 hr. per mm. of aperture	39.4		26.0	
Aperture	**Feed**	**Undersize**	**Oversize**	**Undersize**
0.742-in.	1.2	.....	.....	.....
0.525	7.7	.....	.....	.....
0.371	15.8	.....	.....	.....
3-mesh	19.8	.....	.....	.....
4	19.5	.....	.....	.....
6	11.9	3.0	2.8	0.4
8	8.5	14.5	28.8	6.5
10	2.3	18.6	36.6	9.4
14	2.3	12.9	13.6	7.1
20	1.2	7.9	3.7	4.3
28	1.2	8.0	2.9	6.0
35	0.8	5.5	1.3	7.2
48	0.6	3.9	1.2	8.0
65	0.6	3.7	1.1	12.8
100	0.4	2.3	0.8	4.6
150	0.4	2.0	0.7	4.5
200	0.3	2.0	0.7	4.4
<200	5.5	15.7	5.8	24.8
	100.0	100.0	100.0	100.0

tons per hr. with 98% efficiency. These performances indicate a capacity of 9 to 12 tons per sq. ft. per 24 hr. per mm. of aperture. At FLAT RIVER (*IC 6658*) 12 Leahy dry screens were in closed circuit with rolls, and 12 wet screens in closed circuit with a rod mill (the latter screens have since been replaced by drag classifiers). Table 31 gives data on the screens of both groups. At BONNE TERRE (*138 J 286*) one double-deck Leahy screen receives the product of a primary gyratory crusher fed direct from mine skip and set to deliver at 3 in. The screen is 48 × 84 in., set at 25° slope, and vibrated 860 times per min. by a 10-hp. motor. Cloths are 1 1/4- and 3/16-in. The upper half of the upper deck is guarded by 2-in. sq-m. screen of 3/8-in. wire to avoid overloading the lower deck.

St. Joe screen has a ratchet-impact type vibrator. Screens are driven in pairs, by V-belt and countershaft, from a 3-hp. motor. Table 32 gives data on St. Joe screens in S. E. Missouri.

Lead-belt screen. The vibrator (Fig. 33) is mounted on two hickory rods *19* carried on the screen frame. Shaft *5*, driven by pulley *7*, carries, keyed to it, the heavy disk *4*, which is unbalanced by coring out holes *9* and filling them with wooden plugs. The vibration caused by rapid rotation (1,200 to 1,250 r.p.m.) of the disk is transmitted through ball bearings *6* to the hammer *1*, of which *2* is an integral part. A bronze bushing *12* and hardened-steel roller *14* are mounted on *2* and are surrounded loosely by the oblong ring *15*, which is shrunk within the upper portion of transmitter *16*, the lower end of which is attached to a cross bar on the screen cloth. The roller *14* strikes the inside of ring *15* only at the top and bottom of its circular path, thereby transforming the circular motion of the hammer into up-and-down motion of the transmitter. The spring mechanism *22*, *23*, *24*, and *25* is used on large screens to take some of the load off the transmitter.

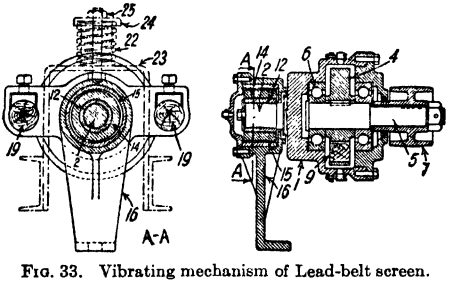

FIG. 33. Vibrating mechanism of Lead-belt screen.

At ST. JOSEPH LEAD CO. a 42×45-in. machine with 1.7-mm. wire cloth formerly screened 25 tons per hr. wet, using spray water. The feed contained 45% < 2-mm. material and the oversize 13.5% < 2-mm. At the same plant a screen 33 in. wide × 7 ft. long with 9-mm. openings handled 33 tons per hr. of dry feed at 70% efficiency.

Multirap screen combines a substantially circular throw with a simultaneous impact. The throw mechanism, situated across the top of the screen box near its feed end, is an unbalanced shaft practically identical with that on the Plat-O screen (Fig. 46). Weight of the box is carried by four trunnions, one at each corner, each passing through a thick pad of crepe rubber encased in a circular housing mounted on the foundation frame. The screen cloth is permanently fastened to the rims of removable panels; 2, 3, or 4 panels, each 2 1/2 ft. long, comprising the screen surface. At quarter-widths, the cloth of each panel is reinforced underneath by a longitudinal channel-form bar *a*, Fig. 34, and above by a corresponding strap, bolted through. The ends of the longitudinal bars under the cloth are semirigidly connected to the end members of the panel, and are also connected crosswise by light angles, forming a rigid but movable lattice beneath the cloth. Impact is applied at the center of each panel by the device shown in Fig. 34. The hammer *b*, with its two striking faces *c*, is mounted at the middle of the flat spring *d*, and constrained by the four spiral springs *e*; hammer and springs are designed to develop an amplitude, at this point, of about 3/8 in. from the 1/64-in. (@ 3,500 r.p.m.) throw of the screen box. Length of the striking pin *f* is adjusted, by the nuts *g*, until its head is struck with the desired intensity of impact on either the up or the down stroke, usually not on both strokes; if wear on the faces *c* should seriously reduce the force of impact, the shims *h* may be removed. The entire impact mechanism is enclosed in a narrow dustproof compartment crosswise of the panel. The manufacturer claims a duty in 30-m. dry screening of 0.8 ton per sq. ft. per hr. as compared with 0.14 ton on a mechanically adequate simple unbalanced-shaft screen of his own manufacture.

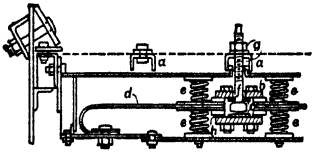

FIG. 34. Impact mechanism of Multirap screen.

Williams Kam-Tap screen is hinged at the lower corners and suspended at the upper end by a vertical rod terminating in a yoke. A roller closing the yoke hangs upon a cam with 4 to 8 arms; rotation thereof produces vertical oscillation of the screen frame, gravity being the restoring force.

Table 32. Performance of St. Joe vibrating screens, St. Joseph Lead Co. (Q)

Mill	Bonne Terre	Leadwood	Desloge		Federal	Mine La Motte
Screen: Width × length, in. *g*	34×84	34×84	36×72	36×96	48×84	42×54
Slope, deg.	32	43	38	38	44	42
Wire size, in.	0.072	0.080	0.072, 0.080	0.072, 0.080	0.080	0.1205
Aperture, in.	0.095	0.102	0.052–0.075 ×0.312	0.052–0.075 ×0.312	0.120	0.147
Life, da.	15	10–12	15	15	15	21
Blinding	30%	20–25%	Consid.	Consid.	10%	Serious, wet
Speed, v.p.m.	1,600 @ 3/16"	1,728 @ 3/16"	1,600 @ 3/16"	1,600 @ 3/16"	1,600 @ 1/8"	1,600 @ 3/16"
Power, hp	1.5 *i*; 1 1/3 *c*	1 *i*	2 *i*; 1 *c*	2 *i*; 1 1/4 *c*	1 1/2 *i*; 2/3 *c*	1 1/4 *i*
Feed: Material	Crusher & roll product	New feed & roll product	Grizzly undersize	Grizzly undersize	Roll product	Grizzly undersize & crusher product
Limiting size, in.	1 1/4	1	1	1	1	3/4
Per cent. overmesh *b*	42.2	38.1	55	55	.....	.....
Per cent. difficult size *a*	23.8	16.1	16	16	.....	.....
Per cent. undermesh *b*	34.0	45.8	29	29	.....	.....
Per cent. moisture	3	3	3	3	3	5
Tons per hr., new	8.3	16.7	16.7	16.7	8.7	5.2
Tons per hr., total	20.8	55.6	66.8	66.8	52.5	31.2
Tons per hr. per sq. ft.	1.0	2.8	3.7	2.8	1.9	2.0
Tons per 24 hr. per sq. ft. per mm. of aperture	10.4	26	67.5–46.8	50.6–35.1	14.8	12.7
Effect of moisture on capac.	Reduces	Reduces	Reduces	Reduces	Red. by 20%	Reduces
Lost time: Per cent	<1/2	1–2	3	3	<1	5
Chief cause	Broken cloth	*d*	*d*	*d*	*e*	Wet ore
Per cent. undersize in oversize	13.7	34.4	24	24	*f*	*f*

a The range between (approx.) 50% larger and 25% smaller than screen aperture.
b Outside the difficult range.
c Power consumed.
d Changing screen, and vibrator adjustment.
e Changing screen, and repairing vibrator.
f About 50% efficiency.
g Cloth, steel; replacement requires two men and takes about 1/2 hr.
i Power installed.

Table 33. Performance of Hum-mer screens (*Q*)

	Conda, Idaho	Chino	Hayden, Ariz.	McGill, Nev.	New Cornelia, Ajo, Ariz.	Potash Co. Am., Carlsbad, N. M.	Presidio, Shafter, Tex.	Avalos, Mex.
Screen: Width × length, in.	36×60	48×60	48 1/2×58	48×60	48×74	48×60	36×60	48×?
Slope, deg.	38	33	35	38	32	33	.....	32
Material.	*Ss*	Steel	Steel	Steel	Steel	Steel	.....	Steel
Wire size, in.	0.006	0.092	0.25	0.135	0.16	0.041 *f*; 0.023 *g*	.....	3/16
Aperture, in.	0.0107	0.125	1.00	0.19×4.3	5/16	0.126 *f*; 0.048 *g*	1/4 in.	3/8
Life, days.	200	15	60	41	21	90	30	120
Replacement: Men.	2	2	3	.....	2	2	.....	2
Hr.	1/2	1/6	1	.....	1 1/2	1	1	2
Blinding.	Slight *a*	Sides	.....	.....	3%	If moist	*h*	Slight
Speed, v.p.m.	.....	900 @ 3/8″	.....	1,800	900 @ 3/16″	1,800 @ 1/16″	.....	.....
Power, hp.	1 *i*	1 *i*	.....	.....	1 1/4 *i*; 1.09 *c*	3	.....	.....
Feed: Material.	Ball mill disch.	.....	Crusher prod.	Roll prod.	Cone prod. @ 1″	Granules	Mill feed	.....
Size.	.....	<1-in. *b*	<1 1/2-in.	<1-in. *b*	*b*	*e*	.....	33% >3/8-in.
Per cent. moisture.	0.8	6	3.8	4	1	0.2	2.5	3
Tons per hr.: New.	6	50	208	.....	46	14 *f*; 5 1/2 *g*	11.5–16.7	33
Total.	7	200	.....	67	92	42 *f*; 14 *g*	Open circ.	63
Tons per hr. per sq. ft.	0.47	10	10.4	3.3	3.8	2.1	1.0	.....
Tons per sq. ft. per 24 hr. per mm. of aperture.	4.0	76.0	9.8	16.4	11.5	15.7	3.8	.....
Effect of moisture on capac.	Reduces	Serious	.....	Reduces	Reduces *d*	Blinds	Blinds *h*	Reduces *d*
Feeding method.	Worm	Pulley	.....	Pulley	Drum	Chute	Plate	Gravity
Surge bin.	None	25-ton	1-ton	100-ton	600-ton	None	None	None
Lost time: Per cent.	Negl.	.....	.....	.....	.....	None	.....	.....
Chief cause.	.....	.....	.....	.....	Cloth	.....	.....	.....
Per cent. undersize in oversize.	3	.....	.....	*p*	13	85 *f*; 80 *g*	*j*	66

	Avalos, Mex.	Domes Mines, Ont.		San Guillermo, Chih., Mex.	McIntyre Porcupine	Sherritt-Gordon	Cons. M. & S. of Canada	Mt. Lyell, Tasmania
Screen: Width × length, in.	48×?	48×96	48×72	48×60	48×81	48×72	48×60	48×72
Slope, deg.	34 1/2	35	35	35	33 1/2	.....	37	41
Material	Steel	HCS	HCS	Steel	Ton-Cap	Tyloy	HCS	*m*
Wire size, in.	1/4	0.220	0.259	3/16	0.162	.....	0.192	*m*
Aperture, in.	7/8	3/8×3/4	3/8×3/4	1/2×1	0.171×0.62	1/4×3/4	1/4×3/4	1 3/4×4
Life, days	90	17	60	15	66	35	28	14
Replacement: Men	2	2	2	2	3	.....	2	4
Hr.	1	3	3	1	3/4–1	1	1/3	3
Blinding	Slight	10%	10%	None	Slight	.....	Slight	None *n*
Speed, v.p.m.	.....	.....	.....	.....	900	.....	1,800	900
Power, hp.	.....	.....	.....	3 *i*; 1 1/2 *c*	.....	.....	1 *c*	7 1/2 *i*; 3.8 *c*
Feed: Material	.....	Crusher prod.	Crusher prod.	R.o.m. ore	Cone prod. @ 1"	.....	Crusher prod.	Crusher prod.
Size	<3-in.	<3/8-in.	<3/8-in.	*k*	*b*	.....	*b*	<8-in.
Per cent. moisture	3	2	2	2	1.5	1.3	1	3
Tons per hr.: New	63	.....	26	120	25	23	90 *l*	150
Total	Open circ.	.....	.....	Open circ.	72	46	270 *l*	150
Tons per hr. per sq. ft.	.....	.....	1.1	6.0	2.7	1.9	13.5	6.2
Tons per sq. ft. per 24 hr. per mm. of aperture	.....	.....	2.8	11.3	15.9	7.2	5.1	3.3
Effect of moisture on capac.	Reduces *d*	Blinds	Blinds	.....	Blinds	Serious	Red. 5–10%	Reduces
Feeding method	Gravity	Rotary	Rotary	Conveyor	Drum	Roller	Roller	Chute
Surge bin	None	30-ton	30-ton	None	200-ton	80-ton	50-ton	None
Lost time: Per cent.	.....	None	None	.....	.....	.....	0.5	None
Chief cause	.....	.....	.....	Cloth	.....	.....	Cloth	.....
Per cent. undersize in oversize	.....	60	60	90% effic.	.....	.....	8	.....

a Except in cold weather.
b For screen analysis, see Table 33*a*.
c Power consumed.
d If moisture exceeds 4%.
e All <1/2-in.; 60% >8-m.
f Upper deck.
g Lower deck.
h If moisture exceeds 3%.
i Power installed.
j Efficiency falls with feed over 12.5 tons per hr.
k All <4-in.; 35% <1/2-in.
l Average for 4 screens.
m Longitudinal (upper) bars of 7/8-in. Mn-steel; transverse bars of 5/8-in. mild steel; all intersections welded.
n Except when very wet.
p 98% of >4-mesh in feed recovered in oversize; 57% of < 4-mesh recovered in undersize; efficiency of separation @ 4-mesh, 76%.
Ss Stainless steel.

Magnetically Vibrated Screens

All screens of this class are activated by a.-c. electromagnets; in one type, direct current is imposed upon alternating, or applied independently, to increase the mechanical effort. The chief points of difference among the several types relate to: (*a*) presence or absence of impact; (*b*) use or avoidance of springs as a reservoir of energy; (*c*) manner of applying the magnetically induced vibration to the screen; (*d*) direction of the vibration with respect to screen surface. Owing to the high frequencies attainable, with necessarily small amplitude of vibration, the principal field for the magnetic screens is fine sizing, wet or dry. Compared with mechanical vibrators, their great advantage lies in the absence of rotating elements requiring lubrication and protection. Nearly all types, however, require special generating or modifying equipment to convert the customary available power supply into current appropriate for the screen. The field of most efficient work is for separation at $^1/_2$-in. and smaller with feeds not coarser than 1-in. limiting. Suitable feed size decreases with decrease in amplitude.

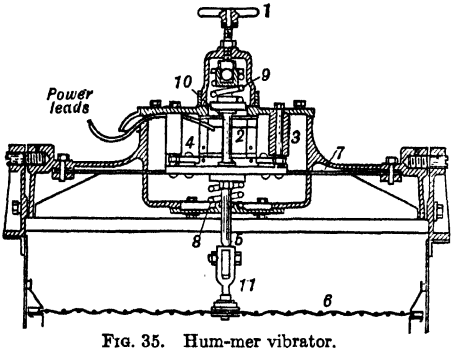

FIG. 35. Hum-mer vibrator.

Impact Type

Hum-mer screen. The cloth is stretched crosswise and attached to the side walls of a stationary box. Vibration is applied at the center of the screen, and normal thereto, and is transmitted lengthwise by straps bolted through the cloth above and below, along its centerline; in some of the larger sizes, vibration is applied at the two quarter-points on the centerline. The vibrator, made in several sizes depending on screen area and load, is mounted on a bridge crosswise of the box. Fig. 35 illustrates its principle. The electromagnet *2* is firmly bolted to the cover of the casing. The armature *4* is maintained in central position by the ribbon spring *7* and is restrained in both vertical directions by the helical compression springs *8* and *9*, the latter acting through the post *10;* amplitude of vibration is governed by pressure applied through the hand wheel *1*, and is adjusted to

Table 33*a*. Screen analyses of feeds to Hum-mer screens (See Table 33)

Mesh	Chino	Nevada Consol., McGill	New Cornelia	McIntyre Porcupine	Cons. Min. & Sm. Co.			
					Feed *b*	Oversize	Feed *c*	Oversize
1.050-in.	12.5	.....	5.8	0.8	.....	.....	.....	.....
0.742...	14.6	0.3	7.0	4.2	3.7	6.8	10.9	15.7
0.525...	12.9	2.3	6.9	7.3	8.2	13.1	9.4	10.7
0.371...	10.6	8.7	14.9	8.3				
3-m.....	8.1	15.8	19.1	9.8	39.8	62.7	43.3	62.6
4.....	6.5	19.7	12.0	20.6				
6.....	3.7	12.6	34.3 *a*	16.5	11.3	6.2	7.4	3.6
8.....	2.8	6.6	.....	8.7	13.2	5.2	10.0	2.6
10.....	2.7	5.6	.....	4.9				
14.....	2.9	3.6	.....	2.9	5.7	1.5	4.8	0.7
20.....	2.7	2.7	.....	2.6				
28.....	2.3	2.2	.....	2.1	2.0	0.4	1.8	0.2
35.....	2.4	1.7	.....	1.8	1.3	0.3	1.2	0.2
48.....	1.8	1.8	.....	1.4	1.7	0.3	1.3	0.2
65.....	1.9	1.7	.....	1.3	1.7	0.3	1.3	0.3
100.....	1.8	2.2	.....	1.1	2.2	0.5	1.7	0.4
150.....	1.8	1.4	.....	0.8	1.7	0.4	1.2	0.4
200.....	1.7	1.5	.....	0.6	1.3	0.1	0.9	0.3
<200.....	6.3	9.6	.....	4.3	6.2	2.2	4.8	2.1
	100.0	100.0	100.0	100.0	100.0	100.0	100.0	100.0

a All <4-m.
b At 310 tons per hr., of which 193 tons to oversize.
c At 235 tons per hr., of which 147 tons to oversize.

allow the ends of the armature to strike the blocks *3* with such impact as may be required for effective screening. Vibrations and impacts are transmitted to the screen *6* through the connecting rod *5*, adjustable in length, and the yoke *11*.

Standard screen widths are 3 and 4 ft., but with most types it is possible to combine two units, side by side, for feeding from a common source. Usual inclination, 33°. Driving force may be drawn from a belt-driven generator or a motor-generator set (usually 15 cycle), or from thermionic, phanotron, or thyratron rectifiers. Frequencies available by the above means are 900, 1,800, and 3,600 v.p.m. Amplitudes are from 1/32 to 1/8 in. in the vibrator, amplified somewhat by the screen. The manufacturer does not recommend use of apertures coarser than 1/2 in.

Performance data are given in Tables 33, 34, 35.

Table 34. Hum-mer screens in New Jersey Zinc Company's Franklin mill (*Q*)

Mill screen No.	7	8	9	10	12
Manufacturer's type	70	70	400	31	400
Screen: Width × length, in.	48 × 60	48 × 60	48 × 96	48 × 60	48 × 96
Slope, deg.	37	34	35	35	34
Material	Ty-rod	Ty-rod	Ty-rod	Ton-Cap	Ty-rod
Wire size, in.	0.054	0.162	0.023	0.035	0.035
Aperture, in.	0.101	0.50	0.023	0.065	0.032
Life, days	75	500	260	200	260
Replacement: Men	2	2	2	2	2
Hr.	1/2	1/2	1/2	1/2	1/2
Blinding	.....	.....	*b*	.....	*b*
Speed, v.p.m.	900	900	900	900	900
Power installed, hp.	5/8	5/8	2 1/2	1 1/4	2 1/2
Power consumed, hp.	1/2	1/2	2	1	2
Feed: Material *a*	Crude ore	Crude ore	Crude ore	Middling	Crude ore
Per cent. moisture	1.5	Dry	Dry	Dry	Dry
Tons per hr.: New	11	60	13.3	7.1	7.3
Total	20	60	15.3	13.3	7.3
Tons per sq. ft. per hr.	1.0	3.0	0.48	0.66	0.23
Tons per sq. ft. per 24 hr. per mm. of aperture	9.4	5.7	19.7	9.6	6.8
Feeding method	Roller	Chute	Roller	Chute	Chute
Surge bin	75-ton	None	None	50-ton	None
Per cent. undersize in oversize	3.8	*c*	14.7	.....	29.8

a For size, see Table 34*a*.
b No blinding on type 400 screens, inclined 33° or over, and treating not more than 20 tons per hr.
c Screen only for scalping refuse from ore, latter at maximum 6-m. size.

Table 34*a*. Sizing by Hum-mer screens, New Jersey Zinc Company's Franklin mill (*Q*)
(See Table 34)

Screen No.	7 (0.101-in.)		9 (0.023-in.)	10 (0.065-in.)		12 (0.032-in.)
Mesh	Feed	Oversize	Feed	Feed	Oversize	Feed
0.525-in.	1.2	1.6	.....	.....	.....	.....
0.371	4.2	6.4	.....	.....	.....	.....
3-m.	5.2	9.0	.....	.....	.....	.....
4	9.3	18.3	.....	.....	.....	.....
6	15.5	27.0	0.2	.....	0.5	.....
8	15.2	22.4	1.3	1.3	11.7	.....
10	11.8	7.6	7.4	5.3	21.6	0.1
14	7.6	1.7	10.1	14.1	15.1	2.6
20	6.5	0.8	17.8	25.5	19.0	33.1
28	4.4	0.4	18.0	16.4	15.8	38.7
35	4.0	0.3	14.8	12.4	10.2	19.5
48	3.0	0.3	10.2	6.8	3.0	4.0
65	3.0	0.4	6.3	5.1	1.3	1.2
100	1.9	0.3	5.1	3.9	0.6	0.4
150	1.2	0.3	3.2	2.7	0.4	0.1
200	0.8	0.4	2.0	2.1	0.3	0.1
<200	5.2	2.8	3.6	4.4	0.5	0.2

At Copper Cliff (*A TP 901*) each 6 1/2×12 1/2-ft. Marcy rod mill, crushing 625 to 800 tons (average 700) new feed per day to about 65-m., is in closed circuit with a Dorr FX, 12×28 1/2-ft. classifier, handling a circulating load of 250%. As an experiment, the classifier in one circuit was replaced by three 4×5-ft. Hum-mer screens with Ton-Cap No. 2475 stainless steel cloth (10×41-m.;

opening 0.0093 in. wide; wires 0.018 and 0.025-in.). Maximum capacity of each screen was 210 tons new feed per day, returning 30% to the mill. Feed to screen contained 70% solids; undersize (plus spray water), 40 to 42% solids. Table 35 gives sizing tests. No blinding and no appreciable wear in 15 days, whereas a plain steel screen under same condition was blinded with rust in 40 hr. A stainless-steel screen with nearly square (41×50-m.) openings was quickly blinded. Screen products showed no segregation of values. In this mill, selective grinding of heavy sulfides is desirable, hence the alteration was not adopted. The test demonstrated the possibility of avoiding selective overgrind of heavy mineral by closing circuit with a screen. (See also Sec. 5, Art. 12.)

Table 35. Feed and products of Hum-mer screens, Copper Cliff, Ont.

Mesh	Feed	Oversize	Undersize
On 48...	5.7	18.6	0.9
65...	10.1	19.6	6.4
100...	12.1	13.2	12.3
200...	27.6	20.7	31.2
<200...	44.5	27.9	49.2
	100.0	100.0	100.0

Tyler "400" screen. Four vibrators similar to the Hum-mer, one at each corner of the screen, activate the screen frame and thus vibrate the cloth normal to its surface. Usual speed, 3,600 v.p.m.; usual inclination, 30 to 38°. For performance of two of these screens at NEW JERSEY ZINC, see Table 34.

Non-impact Type

Jeffrey-Traylor "FB" screens. The electromagnetic activating device is shown diagrammatically in Fig. 36. The stator, with its two coils, is rigidly suspended from the two yokes *a*. The armature is fastened to the yoke *b*, which encircles and clamps the composite leaf spring *c* and is attached at its other end to the screen frame. The steel spring bars *c* are of the length, section, and number needed for damping and restoration in view of the gravity load. The casting surrounding and supporting the vibrator is made heavy enough to serve as an inertia anchor against the screen and load. There is no impact. Amplitude is governed entirely by rheostat control of the electrical input, but is very small in any case; frequency is claimed to be twice that of the power supply, unless modified. If additional force is needed, direct current may be imposed upon the alternating, or may be directed through a separate magnet circuit; in either case, amplitude is gained at expense of frequency. Two vibrators are mounted (Fig. 37), one at each side, on the inclined side members of the stationary outside frame, and transmit their vibration to the screen box. The entire mechanism is suspended, and its inclination (± 30°) adjusted, by hanging rods and helical springs (Fig. 37). Screen cloth is stretched endwise and is supported, on a curved profile, by rubber-covered cross bars. Applicability is limited to fine screening with light on-screen loads on account of low turnover.

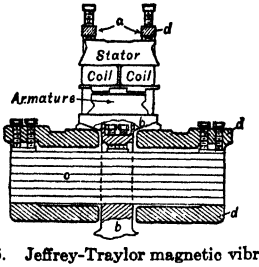

FIG. 36. Jeffrey-Traylor magnetic vibrator.

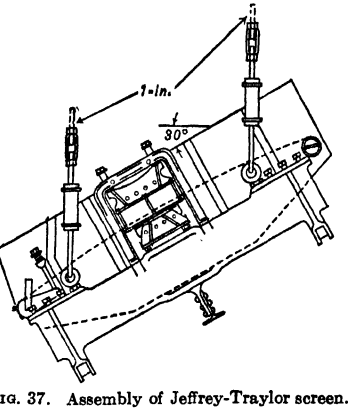

FIG. 37. Assembly of Jeffrey-Traylor screen.

Performances are presented in Table 36.

Conveyanscreen (Fig. 38). The heavy inertia-anchored vibrating device is hung above and across the screen box in such position that the direction of vibration is oblique to the long dimension of the screening surface, at an angle fixed at about 60° or adjustable. Slope of the screen surface is adjusted

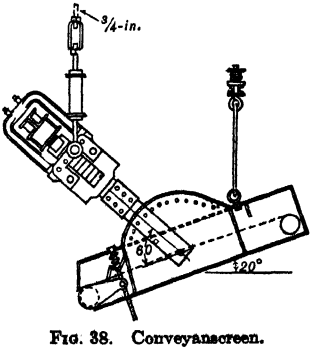

FIG. 38. Conveyanscreen.

Table 36. Performance of Jeffrey-Traylor magnetic screens (*Q*)

	Climax	McGill	New Cornelia	Oatman	Combined Metals	Potash Co. Am.	
Screen: Width × length, in.	48×84	40 3/4×74	40×74	47×88	48×84	42×72	48×84
Slope, deg.	25	38	27	14	30	30	30
Material	Steel	Steel	Steel	*f*	Steel	Steel	Steel
Wire diam., in.	0.120	0.148	0.16	*f*	0.148	Ton-Cap No. 829	
Aperture, in.	5/16×1	0.216×3	5/16	0.396	1/2×1/2	0.095	0.095
Life, days		35	16 2/3	45 *g*	45	60	60
Replacement: Men			2	3	2	2	2
Hr.			1 1/2	1	1	1	1
Speed, v.p.m.		3,600	3,600	3,600		3,600	3,600
Amplitude, in.	1/16		1/8			1/16	1/16
Power, hp.			2.2 *i*; 1.87 *c*	*h*		1	1
Feed: Material	Crushed <2-in.	Symons prod.	Crushed @ 1-in.	Crusher prod.	Crusher prod.		
Size	*a*	*a*	*d*	<2-in.	<3-in.	50% >8-m.	
Per cent. moisture	2–3	4.8	1	3.5	2	0.5	0.5
Tons per hr.: New	21	52	40	50	60	15	30 *j*
Total	50		80		120	55	60
Tons per sq. ft. per hr.	1.8	2.5	3.8	1.8	4.3	2.6	2.1
Tons per sq. ft. per 24 hr. per mm. of aperture	5.4	10.9	11.5	4.2	8.1	25.9	20.9
Effect of moisture on capacity	Serious	Reduces	Reduces	*e*	None	Serious	Serious
Feeding method	48-in. belt	Pulley	Drum	Chute	Pan	Chute	Chute
Surge bin	1,500-ton for 25 screens	60-ton	600-ton	None	None	280-ton	None
Lost time				Neg.		None	None
Per cent. undersize in oversize		*b*	10			85	70

a See Table 36*a*.
b Oversize has 97% of >4-m. in feed; undersize has 69% of <4-m. in feed.
c Power consumed.
d See Table 33*a*; shares feed with Hum-mers.
e Serious blinding with over 5% moisture.
f Ton-Cap No. 5140 (0.396-in. aperture), or National Alloy screen of same aperture and 0.192-in. wire.
g Turned for equalization of wear.
h 3/4 hp. for motor-generator set; total 9 hp. for a.-c. and d.-c.
j Tonnage through screen.

by suspension rods; other rods, with helical springs, carry the weight of the vibrator and part or all of that of the screen box. The horizontal component of the vibration permits reduction of slope to about 20°. Applicability is limited to fine feeds.

Table 36*a*. Sizing tests for Table 36

Mesh	Climax	Nevada Cons., McGill
1.050-in.	.....	5.0
0.742	.....	9.4
0.525	.....	8.3
0.371	55.5	7.3
3-m.	13.1	6.2
4	7.8	5.8
6	.....	5.2
8	.....	4.1
10	9.9	4.4
14	.....	3.6
20	.....	3.3
28	.....	3.2
35	3.0	2.8
48	3.0	3.3
65	0.8	3.5
100	0.9	4.0
150	.....	2.6
200	1.5	2.4
<200	4.5	15.6
	100.0	100.0

Table 37. Sizing tests on products of Utah screens, Magna mill (*Q*)

Mesh	Percentages retained	
	Oversize	Undersize
1.05-in.	1.6	.....
0.742	13.2	.....
0.525	18.3	.....
0.371	15.6	.....
0.250	11.1	.....
4-m.	7.8	.....
6	6.2	.....
8	4.0	.....
10	2.8	1.2
14	2.6	9.2
20	1.8	11.5
28	1.4	9.9
35	1.3	8.3
48	1.2	7.1
65	1.2	6.6
100	1.2	5.5
150	1.2	5.3
200	1.1	4.7
<200	6.4	30.7
	100.0	100.0

Utah screen (Fig. 39) uses a small-amplitude a-c. vibrator with heavily constrained armature of the general type shown in Fig. 36, but differing in that a split current produced by a copper-oxide rectifier is so led to two electromagnets *e*, located respectively above and below the armature *f*, that each successive half wave produces an oppositely directed impulse on the armature, thus producing positive reciprocation. The ends of the laminated armature are rigidly fastened by post clamps *b* to the heavy inertia-fixed castings *g*, one each side, which are suspended by spring and cable from clips *h* at the corners. Screen box *a* is mounted on cross beams *i* so as to interpose additional resilience between armature and box and thus amplify the vibration. Slope is 25 to 40°; variable in the suspension. Limited in utility to fine feeds.

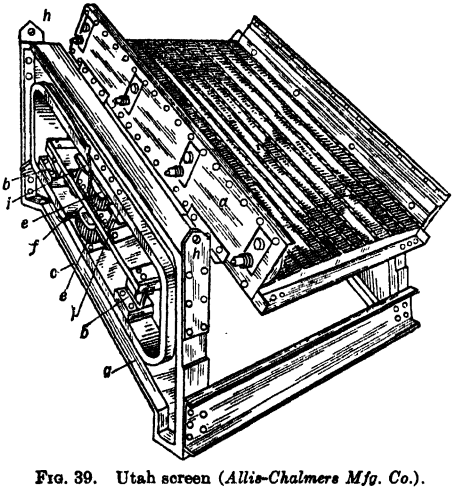

FIG. 39. Utah screen (*Allis-Chalmers Mfg. Co.*).

Performance. Each of the 12 fine-crushing units at MAGNA has six 4×5-ft. Utah screens in closed circuit with rolls (Fig. 16, Sec. 2), treating ore <1-in. feed. In a test period each screen handled 1,840 tons (including 501 tons new feed) per 24 hr. Table 37 gives sizing tests. Average moisture, 5.03%; increase causes blinding. Screen cloth, 4×10-m. 0.028- and 0.041-in. steel wire, lasted 7 days; it required 2 men 6 min. to replace. Slope, 40°; speed, 3,620 v.p.m.; installed power, 0.6 kw. per screen. Screen was fed direct from the head of an elevator.

Sherwen screen (*148 CG 118*) (Fraser & Chalmers) utilizes a half-cycle current from Westinghouse metal rectifier to energize an electromagnet, the armature of which is attached to a screen frame. The back stroke is produced by springs. All moving parts are spring-supported, to increase amplitude. Vibrator is attached near the feed end of the screen.

Locker's Supreme screen (*140 CG 1107*) employs a full-cycle current through a magnet on each side to vibrate the screen frame with corresponding frequency. The screen has two decks; screen is stretched longitudinally; slope increases toward the discharge end.

8. CLOSED-PATH VIBRATORS

These machines were developed in response to a demand for vibrating screens cheaper than the magnetic, and less noisy and better mechanically than the impact types. As it

turned out, the early eccentric-driven machines were also better adapted to handling coarse feeds and heavy on-screen loads than their predecessors. At present mechanical advances in the unbalanced-pulley type are gradually increasing its applicability to heavy loads. It is probably more widely used for fine screening than the eccentric-drive type on account of better control of vibration intensity. Eccentric- or positive-drive machines are used generally for screening at 1/2-in. and up and are sometimes used down to 1/4- or 3/16-in. separations. The unbalanced type should not, in general, be used for feeds coarser than 1 1/4- to 1 1/2-in. limiting nor for separations coarser than 1/2-in.

Eccentric-drive Machines

In screens of this type a balanced eccentric shaft is mounted on the main frame and the follower bearings are rigidly attached to the screen box. The screen box is either wholly supported by the shaft, or partly by the shaft and partly by some flexible means such as rods, cables, springs, rubber, or combinations thereof, or wholly by the latter means. The screening surfaces are variously supported in the box. Each of the items, *viz.*, the place and type of mounting of the follower bearings; the place and type of auxiliary support of the box, including the relative weights of main frame and box; the weight and distribution of the live load; the mounting of the screen surface; and, to a minor extent, the eccentric and its mounting, affects the character of the vibration. The resultant of all of these effects at any given point on the screening surface determines the motion and screening action *at that point;* the resultants throughout the structure, taken with the nature of the latter, determine structural competence, *i.e., life.*

Much foolishness has been printed and spoken about closed vibratory paths in screening. The fact is that relative to a reference point independent of the screen structure—and this means, among other things, the particles on the screening surfaces—the vibratory paths of every part of the structure are different, no two successive paths of the same point are alike, and it is probable that no one such path is free of inflection. In other words, the paths are not circles or ellipses, even under the most favorable circumstances, but rather irregular erratically wavy curves of generally circular or roughly elliptic outline, changing more or less slightly as one part of an unloaded screen gets into or out of synchronism with another, and changing considerably, continually, and erratically with the live load. The important considerations are whether the motion is at all times sufficient to stratify the bed, keep it moving fluidly, and combat blinding without shaking screen and supports to pieces.

Types of eccentric-drive machines differ in the details of the vibrator, whether the screen box has auxiliary support, and in the mechanical nature of such support. Since variations in vibrator are minor, the screens may be grouped as WITHOUT AUXILIARY SUPPORT; SPRING-SUPPORTED; RUBBER-SUPPORTED.

Eccentric-type vibrator. Fig. 40 shows a form of eccentric vibrator, the elements of which are present in all so-called circular throw screens. Beams *a* are parts of the main frame; they carry the self-aligning ball bearings *b* for the eccentric shaft *c*. Eccentric shoulders *d* run in self-aligning roller bearings *e* mounted on the side plates *f* of the screen box. A V-belt drive sheave *g*, a flywheel *h*, and an adjustable balance wheel *i* are mounted on *c*. Housings *k* protect the flywheel and balance wheel; tube *l* acts both to protect shaft *c* and as a necessary structural stiffener. Speeds are usually about 1,000 v.p.m. and amplitudes 1/8 to 3/8 in., increasing to 1/2 in. for material that tends to blind badly, *e.g.*, splintery material like coke.

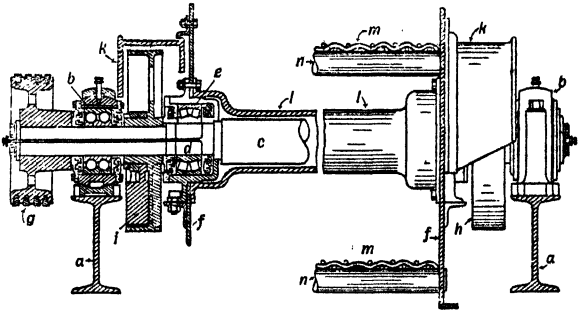

FIG. 40. Typical eccentric-type vibrator.

Without Auxiliary Support

Vibrator screen (Stephens-Adamson) is typical of the simplest form of eccentric-driven machine. Screen box *f* (Figs. 40, 41) carries the screen drawn taut longitudinally between transverse stretchers *y* at each end. It is supported against whip by rubber-covered bow

rods n, which run across the box in a plane somewhat above that of the corresponding stretchers. The weight of the box and rock load are carried entirely on the housing of the eccentric followers e, which are so placed that shaft c runs approximately through the *center of gravity* of the loaded screen. Rocking of the box around shaft c is prevented by the pantograph stabilizer v, which is fixed at its lower ends to the flywheel guard k and across the upper bar to f by bolts z. Slots for bolts z permit variation of tilt, and anchorage of k to beam x through bolts t and bearing s maintains the inclination (22° ±).

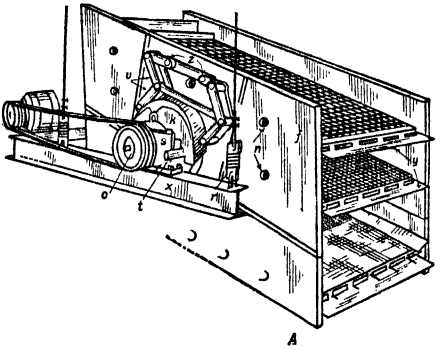

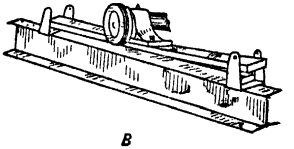

FIG. 41. Vibrator screen (*Stephens-Adamson*).

The vibrator is that shown in Fig. 40. It and the attached screen box are supported on beams x, one each side, these in turn being supported on the cable-spring combinations r. An alternative support is shown in Fig. 41, item B, in which the eccentric-shaft main bearings are carried on the cradle spring on the supporting beams.

The vibratory path of that part of the box near the shaft is generally circular so far as an indicator card backed against the screen assembly is concerned, but against a card carried on an independent support it is more or less irregularly elliptical with the major axis tilted at an angle from the vertical dependent upon the weight of the assembly and live load, the length of the supporting cables, and/or the resistance of the springs. Near the ends of the screen box the path is noncircular even with respect to a point on the support, due both to flexure of the box and to rock of the pantograph; the absolute path here is a resultant of this primary distortion and that due to movement of the whole assembly. Disregarding irregularities, the absolute path of an element of the screening surface is probably bluntly elliptical near the transverse centerline of the surface and pronouncedly elliptical toward the ends, with the upward inclination of the major axis more nearly counterflow when the direction of rotation is counterflow at the top.

Spring-supported Box

Niagara screen. A vibrating mechanism similar to Fig. 40 is mounted *at the center of gravity* of the screen box. Most of the weight of the box is supported, at the four corners, by brackets engaging helical springs which rest on the side members of the outside frame. The latter is usually suspended by rods or cables without springs, attached at the four corners. Screen cloth is stretched sideways, with an upward antiwhip bulge over longitudinal supporting bars.

The effects of taking up more or less of the box weight on springs near the end is to decrease the difference in amplitude of vibration between ends and mid-section of the screen, and probably to iron out some of the waviness of the vibration curve at the ends. The load on the eccentrics is also decreased, which is an advantage mechanically.

Performances are given in Table 38. Table 38*a* shows quality of products at BUFFALO ANKERITE mill, where the screen was in closed circuit with cone crusher and rolls.

Gyrex screen (Fig. 42) has a vibrating mechanism c, similar to Fig. 40, located *at the center of gravity* of the screen box. The screen box is carried by flat springs a near

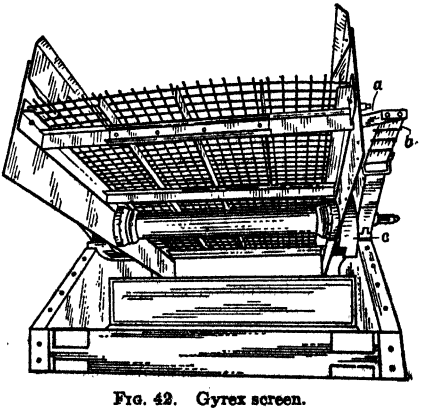

FIG. 42. Gyrex screen.

Table 38. Performance of Niagara screens (*Q*)

	Balmat	Chino	Mountain Copper	Potash Co. of America	Buffalo Ankerite *f*	Pamour Porcupine	Falconbridge	Noranda		Paymaster
Screen: Width × length, in.	48×72	60×72	48×72	36×48	48×72	48×96	48×96	48×72	60×96	36×96
Slope, deg.	33	33	20	20	22	22	24 *u* 22 1/2 *l*	26	25	25
Material	Steel	Steel	Ton-Cap 963	Phos. bronze	Steel	HCS	Steel	HCS	HCS	HCS
Wire, size, in.	0.244	5/8	*e*	Ton-Cap 662	3/8	0.192	0.44 *u* 0.31 *l*	1-in. rod 5/16-in. wire	5/16 0.180	3/8 0.207
Aperture, in.	1/2×5/8	2 1/2	0.393	0.095	0.50	1/4×1 1/2	1.75 *u* 0.75 *l*	3×3 1×2	7/8×2 3/8×4	1 1/2×1 1/2 1/2×1
Life, days		30				20–30	50 *u* 110 *l*	30 20	20 *k*	40–80
Replacement: Men		2	2	2	2		2			3
Hr.	2	1	1/2	1	3	1/2	2	4 *a*		2
Blinding	Slight	None	None *d*	Negl.			When wet	*j*		When wet
Speed, v.p.m.	1,730	650	1,735	800 @ 1/2 in.	1,050		1,200	1,000 @ 1/4 in.	1,000 @ 1/4 in.	1,270 @ 1/4 in.
Power, hp	3 *i*	7 1/2 *i*; 5 *c*	5 *i*	3 *i*	5 *i*; 3 1/2 *c*	5 *i*	7 1/2 *i*	10 *i*	10 *i*	5 *i*; 3 *c*
Feed: Size		<8-in.	<2 1/2-in. *b*	<3/4-in.			<3-in. *g*	<8-in.	<1/4-in.	
Moisture, %	1.5	3	4–5	0.6	3	2.5	1.5–2	1.5	1.5	2.5 *a*
Tons per hr.: New	36.7	500	20		30		110	600 *h*		26
Total	52	500	20	10	50–75		110			34
Tons per sq. ft. per hr. *m*	2.2	16.6	0.83	0.83	2.1–3.1		3.3			1.4
Tons per sq. ft. per 24 hr. per mm. of aperture	4.1	6.3	2.0	8.3	3.9–5.9		1.9			0.89
Effect of moisture on capac.	Reduces	None	*d*	Reduces	Blinds		Serious	*j*		Serious
Feeding method	Chute	Conveyor	Chute	Chute	Conveyor	Roller	Conveyor	Conveyor	Belt	Chute
Surge bin	None	200-ton	None	None	None	50-ton	None	None	None	None

a May reach 8 to 10%.
b Contains large proportion of fines.
c Power consumed.
d Moisture above 8 to 10% debars screening.
e Open area, 57.9%.
f See Tables 38*a* and 45.
g >2-in., 34.5%; >1 1/2-in., 12.8; >5/8-in., 21.0; <5/8-in., 31.7%.
h Through screen; heavily overloaded.
i Installed power.
j None, up to 5% moisture; capacity cut to 1/3 by higher moisture.
k Of 18 hr. crushing.
l Lower deck.
m Based on upper deck.
u Upper deck.

each end of the box, set edgewise, bolted at the middle to cross bars forming part of the box frame. These flat springs project through rectangular openings in the side plates of the box and are rigidly fastened to the ends of two longitudinal leaf springs *b*, set flatwise, one on each side, attached at their middle points to the casings of the drive-shaft bearings. The lateral springs thus accommodate the longitudinal, and the side springs the vertical component of the circular throw. The screen box can be tilted 30° in either direction and is fixed in position by a slotted link bolted to the base. Eccentricities are standardized at 1/2-in. The manufacturer recommends 625 @ 1/2-in. throws per min. for screening at 1/2-in. and coarser, and 1,000 at 1/4-in. s.p.m. for 3/4-in. to 20-m. operation.

Table 38*a*. Products of Niagara screen at Buffalo Ankerite
(See Table 38)

Mesh	Oversize *a*	Undersize
5/8-in.	16.4	.....
1/2	12.4	.....
3/8	32.8	9.0
1/4	19.5	21.5
10-m.	12.4	32.0
20	1.5	10.4
40	0.9	7.6
60	0.4	2.8
80	0.2	1.4
100	0.4	0.7
150	0.3	2.1
200	0.3	2.1
<200	2.5	10.4
	100.0	100.0

a Screen aperture, 0.5-in.

Performance at CLIMAX MOLYBDENUM is shown in Table 39.

Sizing equipment of N. Y. TRAP ROCK CORP., at Clinton Point (*34 #9 RP 65*) includes four tandem pairs of Gyrex screens. First of each pair is a 4×8 1/2-ft. single-deck with 2-in. square opening; second is a 5×10-ft. double-deck with 3-in. square openings on the upper, and 2-in. openings on the lower deck. All screens are of alloy-steel wire. Individual motors are 5 hp. for the single- and 10 hp. for the double-deck; total, 60 hp. for eight screens. Output of 800 tons per hr. is often treated efficiently on three pairs of the screens, which is 7.8 tons per sq. ft. per hr. to the primary screens, or 3.7 tons per sq. ft. per 24 hr. per mm. of aperture.

Table 39. Performance of Gyrex screens at Climax (*Q*)

	1	2	3
Screen: Width × length, ft.	6 × 10	6 × 12	5 × 10
Slope, degrees	30	22	19
Material	Mn-steel	Steel	Steel
Wire diam., in.	1-in. bars	5/16	1/4
Aperture, in.	7/8–1 3/16	1/2 × 3	5/16 × 4
Speed, v.p.m.	625	1,000	1,000
Amplitude, in.	1/2	1/4	1/4
Power installed, hp. *b*	10	10	7 1/2
Feed: Size, in.	<12	<2	<1 1/2 *a*
Per cent. moisture	2–3	2–3	2–3
Tons per hr.: New	625	167	42
Total	625	167	105
Tons per sq. ft. per hr.	10.4	2.3	2.1
Tons per sq. ft. per hr. per mm. of aperture	11.2	4.4	6.3
Effect of moisture on capac.	Little	Serious	Serious
Feeding method	54-in. conveyor	Chute	48-in. belt

a See Table 36*a*; same feed as Jeffrey-Traylor screen in Climax mill.
b V-belt drive.

Allis-Chalmers Style B Centrifugal screen has a vibrating mechanism essentially like that of Fig. 40, situated *across the top* of the screen box at its mid-length. The box is suspended at the four corners by springs and rods depending from the side members. These, in turn, are suspended in inclined position by cables and springs. It is claimed that the motion path is substantially a vertical circle at the point of actuation, and becomes elliptical, with the long axis of the ellipse inclining forward at the upper, and backward at the lower end of a single-deck screen. The effect of such motion would be to accelerate flow over the upper end and retard it near the discharge end. On the lower screens of a multideck box, the distortion is said to be greater, in the same sense, but diminished in intensity.

The machines are designed for heavy duty at coarse sizes, up to 6-in. openings with 1-in. rods; they have handled iron ore containing lumps up to 250 lb. weight. Coverings are clamped at the sides and rest on longitudinal rubber-covered bars; the degree of crosswise upward curvature is adjustable.

Telsmith Pulsator has a vibrating mechanism similar to Fig. 40. Driving shaft lies *across the top* of the screen box, which is supported on helical springs (one at feed end, three at discharge end) on the centerline. Inclination (usually 18 to 20°) can be varied 4° by adjustment of compression in these

springs. Screen cloth is not under tension but is attached to frames, two for each deck, held in place by longitudinal side strips.

Link-Belt PD screen has an eccentric vibrator similar to Fig. 40, but attached to the screen box *underneath*, at mid-length. Part of the weight of the box is carried by two longitudinal multiple-leaf springs *a* (Fig. 43), one on each side; the ends of the upper leaf are coiled into flat helical springs *b* of which the centers are pinned to brackets under the sides of the box. The leaf springs are fulcrumed at the middle on a cross bar *c* forming part of the main frame *f*; tilt is adjustable and is maintained by bolts passing through slots *d* in the side members. Average slope is 25°. Table 40 shows performance of PD screens in the Freda mill, COPPER RANGE CONSOLIDATED.

Huron Heaviduty screen (*11 MMt 409*) has the box supported at its four corners on the ends of longitudinal leaf springs, one on each side, which curve upward. The two lower corners are suspended by links hanging from the leaf springs, while the high corners stand upon links erected on the ends of the springs.

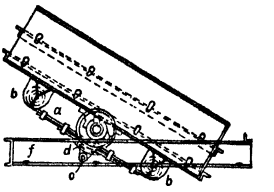

FIG. 43. Link-Belt PD screen.

Table 40. Performance of Link-Belt PD heavy-duty screens in Freda mill of Copper Range Consol. Copper Co. *c*

	No. 1	Nos. 2, 3	No. 4 *a*	No. 5 *a*
Screen: Width × length, ft	4 × 8	5 × 10	4 × 10	4 × 10
Slope, degrees	23	27	25	27
Material	Mn-steel	Alloy-steel	Mn-steel	Alloy-steel
Wire diam., in.	0.3125	0.105	0.25	0.105
Aperture, in.	1	7/32	11/16	7/32
Life, days	22 1/2	12	38	66
Replacement (3 men), hr.	1 1/2	1	1 1/2	1
Blinding	None	*b*	None	*b*
Speed, v.p.m.	975	930	930	900
Stroke, in.	1/4	3/16	3/16	3/16
Motor hp. and speed, r.p.m.	3 @ 1,200	7 1/2 @ 1,750	7 1/2 @ 1,750	7 1/2 @ 1,750
Feed: Size	Mine run	<1-in.	1 7/32-in.	<11/16-in.
Tons per hr.: New	248	124	159	16
Total	248	776	582	40
Tons per sq. ft. of screen per hr.	7.8	15.5	14.5	1
Tons per sq. ft. per 24 hr. per mm. of aperture	7.3	67	20	4.6
Effect of moisture on capac.	None	Reduces	None	Reduces

a Double-deck screen, but only one deck used.
b Blinding may be serious with occasional damp ore.
c All dry screening.

Roto-Vibratory screen, *at its upper end*, has a horizontal shaft rotating in fixed end bearings. Near each end, the shaft carries an eccentric, the two being opposed 180°. Each eccentric runs in a ball race enclosed by a hollow shaft fastened to the screen box. The low end of the screen is suspended by yoke and flexible connection, adjustable in length, from an overhead cross beam, or rests on spring or rubber supports. Screen cloth is taut crosswise (*10 #2 Coll. Eng., 62*). The motion is not unlike that of the Mitchell screen (p. 57) except that it is positive so far as the head end is concerned.

Rubber-supported Box

Ty-rock screen, intended particularly for coarse work, differs from the Niagara (which it otherwise resembles) in that each of the main bearings of the driving shaft is supported by a short yoke, both ends of which rest on rubber cushions on the outside members. Weight of the box is distributed also to four similar rubber cushions at the corners.

At SHASTA DAM 1,200 to 1,400 tons of <9-in. gravel hourly was screened in 2 stages, 2 @ 2-deck 5×10-ft. Ty-rock screens in parallel in each stage. The first pair of screens had 6-in. and 3-in. cloth woven of 1-in. and 1/2-in. rod respectively. The second pair had 3/4-in. and 3 1/2-m. cloth, the coarser woven of 1/4-in. rod. The <3-in. product of the first screen comprised the bulk of the original tonnage. It yielded 300 to 350 tons per hr. through the 3 1/2-m. screen. The tonnages per 24 hr. per sq. ft. of nominal screen areas per mm. of aperture were 8.2 and 28.4 for the 3-in. and 3 1/2-m. decks respectively.

At MORENCI each of 4 @ 6×14-ft. screens receives 1250 tons per hr. of <8-in. primary crusher product. Covering is 1 1/4-in. Ty-rod with 3 1/8-in. aperture. Each of eight @ 5×10-ft. screens with 3/4-in. aperture takes 625 tons per hr. of cone-crusher product. Feed rates correspond to 4.6 and 16.3 tons per sq. ft. per 24 hr. per mm. of aperture. At the ALCOA plant in Guiana a 5×12-ft. two-deck screen has 60-lb. rail spaced 6 in. for the upper deck and 2 1/2-in. cloth on the lower deck. It is fed steam-shovel rock at 600 tons per hr. At INTERNATIONAL NICKEL a 6×14-ft. two-deck machine with 3 1/4- and 1 1/2-in. coverings is fed primary-crusher product at 650 tons per hr. with the last 4 ft. of length blanked off. The same screen with 3-in. and 3/4-in. coverings handled 875 tons per hr., using full decks. At GRAND COULEE 1 @ 5×10-ft. two-deck machine, with 4- and 2 1/2-in. screen, was fed 1,375 tons per

hr. of gravel 12 to 16-in. limiting size. The 2 1/2-in. undersize was sent to 5×10-ft. screens with 1 1/4- and 3/16-in. openings at the rate of 545 tons per hr. and made 330 tons per hr. through the bottom deck.

Denver Simplicity screen has the eccentric shaft crossing *near the bottom* of a single-deck box or near the *center of gravity* of double- or triple-deck screens. The box rests on cylindrical rubber cushions at the four corners. Screen cloth is stretched and crowned in both directions.

Krupp Universal screen has the typical positive eccentric mechanism at *center of gravity* of the screen box (*10 # 2 Coll. Eng. 61*). Latter is supported at each end on a round cross bar carried on side members and passing through thick rubber flanges, suitably reinforced by metal flanges fastened to the side plates. Main bearings are also rubber cushioned.

Good Roads vibrating screen (*33 # 3 RP 117*). The box rests at each corner upon two 3-in. rubber balls superimposed in a suitable cage on the side members.

Selectro screen has an adjustable throw, and a wide range of inclination which can be varied 0 to 40° without stopping operation. To each end of the cylindrical driving shaft *C* (Fig. 44) is keyed a dished plate *D*, the inner rim of which is eccentric to the shaft. The plate *F* has a shoulder, both faces of which are eccentric, and supports the roller race *H;* hence, by turning plate *F* with respect to *D* (by inserting a bar at *J* after loosening nut *N*) the eccentricity of *H* can be varied in eight steps between zero and 3/8 in. The throw is transmitted through the rollers to the inner raceway *H'*, and thence to the hollow bar *B* fitting the flanges *A* on both sides of the screen box, near its *center of gravity*. The stub-shaft *E* and its pulley may be fastened to either end of the shaft *C*, the bearing on the opposite side being closed by a plate. The counterweights *M*, *N* rotate in same plane as the rollers. Inclination of the screen box is adjusted and maintained by four arms hinged to a rotatable casing surrounding the shaft; this casing may be clamped in desired position by bolts which cause engagement with the main bearing. Studs at the ends of the arms engage thick live-rubber flanges suitably mounted in the side plates of the box.

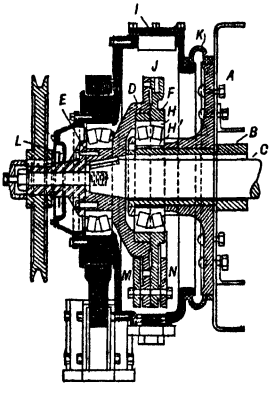

FIG. 44. Throw mechanism of Selectro screen.

Performance. At NEW JERSEY ZINC Selectro screens are used for fine screening. The finest (0.042-in.) takes oversize from a preceding (0.023-in.) Tyler "400" and delivers its oversize to the next coarser Selectro, which repeats the process with the next coarser, as shown in Table 41*a* and the flow-sheet, Sec. 2, Fig. 106. Operating data are in Table 41. The ore is thoroughly dry. At an ILLINOIS coal plant a 4×8-ft. Selectro is fed 100 to 125 tons per hr. of <1 1/4-in. coal. Top deck has 1-in. aperture, second 5/16 × 1-in., third 10-m. With a total screen feed of 103 tons per hr. the bottom deck received 27.5 tons per hr. and passed 18.5 tons per hr. In another run 125 t.p.h. was sent to the screen and 48.8 tons reached the bottom deck, which passed 31.2 tons or 1.2 t.p.h. per sq. ft. of 10-m. screen surface. The spread in screen sizes was too great for efficient operation of all decks; tilt was set to favor the bottom deck, and the oversize of the top deck carried some <1-in. material. At another time, with new-feed tonnage probably within the range above, the oversize of the bottom deck contained 1.7% <14-m.

Table 41. Selectro screens in Franklin mill, New Jersey Zinc Co. *a* (*Q*)

Screen No.	11	13	14	15
Feed: Tons per hr.	18.3	33.7	23.7	13.0
per sq. ft. per hr.	0.46	0.84	0.59	0.32
per sq. ft. per 24 hr. per mm. of aperture	10.3	12.2	6.7	3.2
Screen: Slope, deg.	27	27	23	23
Wire diam., in.	0.035	0.041	0.054	0.063
Aperture	0.042	0.065	0.080	0.095
Speed, v.p.m.	1,200	900	800	700
Amplitude, in.	0.264	0.264	0.346	0.346
Efficiency per cent. undersize in oversize	19.4	38.2	49	47.3

a All screens: 4×10-ft.; 5-hp. motors, Tex-rope drive, 2 1/2 hp. consumed; Ty-rod cloth; cleaned once per shift; 2 men require 1/2 hr. to replace. For size of feed see Table 41*a*.

Unbalanced-throw Machines

Screens of this class are alike in the fundamental element that they all utilize the gyratory force developed by mounting an unsymmetrical body on an unstable base and then rotating the body at high speed around an axis not passing through its center of gravity. The resultant translatory motion is constrained sufficiently by gravity and resilient ties to produce vibration in roughly closed paths of the same general shapes as those discussed on p. 49, but more erratic, and showing much greater response to changes in live load. Amplitude and the direction of prevailing eccentricity of path depend upon: (*a*) mass,

Table 41*a*. Sizing tests on feed and products of Selectro screens, Franklin mill (*Q*)

Mesh, in.	Screen No. 11 (0.042-in.)			No. 13 (0.065-in.)	No. 14 (0.08-in.)
	Feed	Undersize	Oversize = feed to No. 13	Oversize = feed to No. 14	Oversize = feed to No. 15
0.131	0.3	.....	0.6	1.2	1.6
0.093	5.9	.....	8.4	12.9	19.4
0.065	15.9	0.1	32.8	47.7	61.2
0.046	17.5	2.6	38.8	30.0	16.4
0.0328	24.9	33.1	17.5	7.7	1.3
0.0232	20.7	38.7	1.5	0.4	0.1
0.0164	11.2	19.5	0.3	0.1	.....
0.0116	2.2	4.0	0.1	.....	.....
0.0082	0.8	1.2	.....	.....	.....
0.0058	0.2	0.4	.....	.....	.....
0.0041	0.1	0.1	.....	.....	.....
0.0029	0.1	0.1	.....	.....	.....
<0.0029	0.2	0.2	.....	.....	.....
	100.0	100.0	100.0	100.0	100.0

speed, and eccentricity of the unbalanced member; (*b*) position of the rotator with respect to center of gravity of the loaded box; (*c*) constraint imposed upon the screen box by the manner of its support; (*d*) weight of material on the screen.

The screens of this type differ from each other in the method of producing (and controlling) unbalance in the rotor, in the location of the rotor, and in the manner of supporting the box and constraining its motion. The combinations of these variables are too diverse to permit any logical classification. The most apparent structural difference is in the location of the vibrating mechanism. Speed is usually 1,200 to 1,800 r.p.m. and the corresponding amplitude range $^3/_{16}$ to $^1/_{16}$ in.

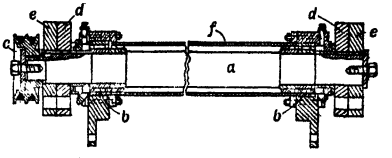

FIG. 45. Unbalanced rotor.

Unbalanced rotor. A simple form is shown in Fig. 45. It consists of the symmetrical shaft *a*, roller bearings *b* attached to the screen box, a drive pulley *c*, and two unbalanced flywheels *d*, *e* near each end. Flywheels *d* are keyed to *a*. Flywheels *e* are adjustably locked to *d*. Both are usually equally weighted so that the degree of unbalance of the rotor as a whole may be varied from zero to a maximum by suitably setting the relative positions of the weights of *d* and *e* before locking. Tube *f* is primarily a stiffener and tie between bearings *b;* secondarily it serves as a dust guard and protects the shaft from wear.

Vibrator at Top of Screen Box

Plat-O screen (Fig. 46) comprises the vibrator *a*, substantially as described above, mounted on top of the sidewalls of the screen frame *b;* eight supporting springs *c*, four each side; a supporting frame consisting of longitudinal members *d* and cross ties, suitably stiffened; and one or more screen decks *e*, drawn taut lengthwise between clipbars *f*, and stretcher assemblies *g* mounted on the back of the box. Cross pipes *h* stiffen the side walls and support the screen against whip; they are rubber-covered to reduce wear. The box is open at the top but usually has a bottom for transport of undersize for front delivery.

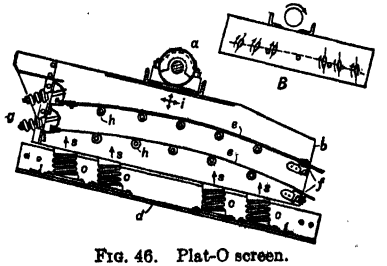

FIG. 46. Plat-O screen.

Direction of rotation is clockwise in the view shown, *i.e.*, WITH-FLOW, or CON-FLOW. The small ellipses shown in item *B* represents the manufacturer's idealisations of vibratory paths at different points along the length of the screening surface. It is apparent that with the lines of action of impulse *i* and support *s* as indicated, the resultant path could be circular only in the miraculous case when the resultant of the dead and live (rock) loads of the box completely balanced at all times the instantaneous resultants of the continuously variable *i*'s and erratically variable *s*'s. But a similarly miraculous constant difference

between the resultants of the two sets of forces is a necessary condition precedent to the elliptical paths indicated. Rough ellipticity of all paths certainly exists. Inconstancy both as to axis ratios and directions is just as certain.

Link-Belt UP screen (Fig. 47) has the box *a* supported on each side by a composite leaf spring *b* of which the upper leaf curves upward 180° at both ends to connection with the upper flange of the box. The vibrating mechanism *c* lies across the top of the box, at mid-length. The body of the rotating shaft is eccentric to its bearings; the amount of unbalance, thus fixed, is made adjustable by addition of a movable unbalanced flywheel on each end of the shaft. Screen covering is stretched transversely. The lower of two decks is independently mounted in a separate frame which can be attached below that of the upper deck.

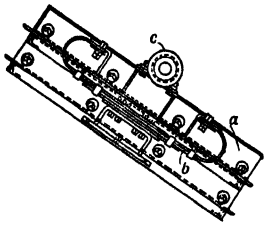

FIG. 47. Link-Belt UP screen.

Performance. At the Maitland mill of the CANYON CORP., a 3×5-ft. screen, with 0.170-in. apertures and inclined 25°, handles 10 tons per hr. of new feed at 1/2-in. limiting size, plus an estimated 15 tons of circulating load (*Q*). Ore is hard and siliceous and has 2% moisture. Screen of 0.080-in. steel wire lasts 30 days; is replaced by 2 men in 1/2 hr. A tendency of the cloth to slip and tear before being completely worn was corrected by fastenings at top, middle, and bottom on the centerline. Strokes, 1,720 @ 1/8-in. per min.; driven by V-belts from 2-hp. motor.

Aero-Vibe screen consists of a rectangular box *a* hung at each corner by cable from a helical spring: usual inclination, about 20°. The vibrating mechanism is that shown in Fig. 45. Cloth is stretched transversely.

Vibrator Near Center of Gravity

Denver-Dillon screen has flywheels at the ends of a shaft carried on roller bearings at the centers of gravity of the side plates; each flywheel has a weight which can be bolted at the desired distance from the center to vary unbalance. The screen cloth is stretched crosswise. The screen box is suspended, near its corners, by four vertical rods, all of the same length not exceeding 42 in.; the rods are attached to the box by pivoted brackets, and are supported at top on helical compression springs, preferably mounted on an overhead frame. Inclination of the frame, averaging 22 1/2° and adjustable ± 8°, fixes the slope of the screen. Usual speed is 1,000 v.p.m.

Performances are given in Table 42.

Table 42. Performance of Dillon screens (*Q*)

	Noranda	Paymaster
Screen: Width × length, in...	48 × 96	36 × 96
Slope, deg.	25	25
Material	*HCS*	*HCS*
Wire size, in.	0.177; 0.196	*u* 3/8
		l 0.207
Aperture, in.	3/16×2	*u* 1 1/2×1 1/2
		l 1/2×1
Life, da.	30	40–80
Replacement: Men	*d*	3
Hr.	2	2
Blinding	*b*	*f*
Speed, v.p.m.	1,250 @ 1/8-in.	1,270 @ 1/4-in.
Power, hp	5 *i*	3 *i*
Drive	Tex-rope	V-belt
Feed: Material	Cone & roll prods.	Jaw-crush. prod.
Limiting size, in.	1/4	.....
Per cent. moisture	1.5	2.5 *e*
Tons per hr.: New	75 *a*	26 *g*
Total *j*	.....	34 *g*
Effect of moisture on capac.	*b*	*f*
Feeding method	Chute	Chute
Surge bin	75-ton *c*	None

a Heavily overloaded.
b To 5% moisture, none; higher moisture reduces capacity to 1/3.
c For 8 screens.
d On off-shift.
e May reach 8 to 10%.
f Excessive moisture debars screening.
g Considerably below capacity at normal moisture.
i Installed power.
j For the PAYMASTER screen this corresponds to 0.94 ton per sq. ft. per hr.
u, upper deck. *l*, lower deck.

Vibrator Underneath Box

Vibrex screen has the box supported by two-armed yokes along the sides; the arms rest in horizontal position on springs which, in turn, rest on foundations or on a suspended frame. Circular casings welded to the side walls of the box are carried in the neckpieces of the parallel yokes. Their centers are on the transverse centerline of the box; thus, with suitable set nuts slotted in the yoke, tilt is adjustable. Gyration is effected by unbalanced weights rotating with adjustable radius, in the above-mentioned casings, on a shaft extending across the bottom of the screen box. Screen is stretched transversely.

Miscellaneous Types and Positions of Vibrator

Mitchell screen. The sides of the screen box are suspended from the ends of the vibrator. The latter (Fig. 48) comprises a cylindrical tube forming both a strong beam and a frame for a motor *A*, the shaft of which carries a ball cage *D* at each end, while the ball races *E* are carried at the ends of the beam. In the form shown the cages and races provide for four balls; in another form there is one 2-in. ball only at each end. The vibrator is mounted in a spherical seat at its center, on a saddle supported on a self-contained structural-steel framework. It is thus free to follow a path generating a double cone with base diameter of about 1/16 in. and apexing at the center. The hanging screen box follows, with the path of any portion of the screen modified by the resilience of the side plates of the box and secondary vibration of the side-stretched cloth. Customary speed is 3,600 v.p.m.; motor is 3/4-hp., induction-type. Slope is 35 to 40°.

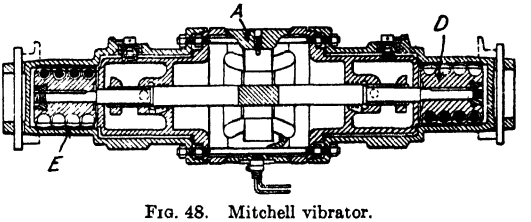

FIG. 48. Mitchell vibrator.

Performance. In the CONDA, Idaho, phosphate-rock plant, a 48×60-in. screen with 1/2-in. apertures and inclined at 33° receives 80 tons per hr. total feed; moisture, 5.5%. Oversize contains 10% undersize. Screen of 3/16-in. spring-steel wire lasts 130 days and is replaced by 2 men in 45 min. At MIAMI COPPER, in each of the three crushing units, four 66×72-in. Mitchells and one other screen of about the same size, in parallel, receive 550 tons per hr. of new feed from a cone crusher delivering at about 1-in. max. size, plus their own recrushed oversize, or a total load of 150 tons per screen per hr.; moisture, 3 to 3.3% (higher moisture causes excessive blinding). Each screen has two sizes of cloth: 5/16-in. on the upper half of the deck, 3/8-in. on the lower. Slope, 33°. Screen, of 0.148-in. wire, has average life of 10.3 days. Power consumed, 3/4 hp., or 0.01 kw-hr. per ton. At MATAHAMBRE (*IC 6544*) two Mitchell screens in parallel are in closed circuit with choke-fed rolls set at 1/4 in. and crushing 65 tons per hr. to pass the 3/8×1-in. screen openings; screen oversize, 30 tons per hr. Total screening cost, 1/2¢ per ton. Table 43 gives sizes of feed and products.

Table 43. Work of Mitchell screens at Matahambre, Cuba

Mesh	Feed	Oversize	Undersize
On 3/4-in...	1.5	2.2	0.0
1/2....	9.1	15.5	1.5
3/8.....	29.0	44.5	7.4
1/4.....	23.9	22.4	20.1
6-m....	16.3	6.5	30.2
8.....	3.6	0.5	7.9
10.....	2.4	0.4	6.3
<10.....	14.2	8.0	26.6
	100.0	100.0	100.0

Rod-deck screen has a screening surface that is concave upward, the slope flattening gradually from 30° at the feed end to substantially horizontal at the discharge end, of such a length as to give an average slope of about 10°. The screen surface is made of parallel-rod sections (Art. 3). The screen frame rests on a transverse rubber rocker at the head end, so that motion there is substantially linear, at right angles to the rocker, in a plane inclined about 30° from the horizontal in the direction of flow. The lower end of the box is suspended at the corners on short rods depending from helical compression springs. The mechanism, of the unbalanced-throw type, is supported on the box walls underneath the points of suspension. Hence the motion at the lower part of the screen is of the closed-path type, generally elliptical, and probably with the major axis at a steep angle to the horizontal. At intermediate points ellipticity should increase toward the feed end and the major axis gradually fall into substantial parallelism to the screen.

Performance. Table 44 notes performance at two mills, and Table 44*a* gives size analyses.

At the LORETO CENTRAL mill, two 4×8-ft. screens, with 3/4-in. openings, treat the product of a gyratory crusher, set at 3 to 4 in., at a combined average rate of 200 met. tons per hr. Either screen can take the whole load when necessary.

Table 44. Performance of Symons Rod-deck screens (*Q*)

	Climax	Miami
Screen: Width × length, ft...	4×8	4×8
Slope, deg.....	6	25, 20, 15, 10
Diam. of rods, in.....	3/16	1/4
Spacing of rods, clear, in.....	5/16	1/4
Life of screen, da.....	45–50	30–33
Replacement time, 1 man.....	1/2 min. per rod	1 hr.
Blinding.....	None	None
Speed, v.p.m.....	1,325	1,212
Length of stroke, in..	3/8	1/2
Feed: Material.....	Crusher prod. <2-in.	Secondary roll prod.
Size.....	*a*	*a*
Per cent. moisture....	2–3	3.7
Tons per hr.: New....	80	354
Total....	180	.....
Tons per sq. ft. per hr.	5.6	11.1
Tons per sq. ft. per 24 hr. per mm. of aperture.....	16.9	42.0
Effect of moisture on capac.	Small	Reduces
Feeding method.....	48-in. belt	Hand gate *b*
Surge bin.....	1,500-ton for 25 screens	For 5 screens
Motor power, hp.....	7 1/2 *i*; 6 *c*	5 *i*
Drive.....	V-belt	Tex-rope
Lost time.....	Little	1 hr. per mo.

a See Table 44*a*.
b Experimental installation.
c Consumed power.
i Installed power.

Table 44*a*. Sizing tests on Symons Rod-deck feed and products (See Table 44)

Climax Molybdenum Co.				Miami Copper Co.	
Mesh	Feed	Oversize	Undersize	Mesh	Feed
1/2-in.....	37.0	64.0	1.3	0.742-in.....	8.9
3/8.....	20.0	26.0	8.7	0.525.....	3.0
3-m.....	13.0	7.5	26.0	0.371.....	9.2
4.....	8.0	2.5 *a*	19.0	3-m.....	21.5
10.....	9.0	.....	20.0	4.....	15.7
35.....	5.0	.....	9.0	6.....	9.8
<35.....	8.0	.....	16.0	8.....	6.0
	100.0	100.0	100.0	<8.....	25.9
					100.0

a All <3-m.

Screens with little or no slope must have the mechanism, if this of rotary type, so designed and placed as to produce a sudden stop or, at least, a quick reversal at the forward end of the path of the screen surface; or the path must be con-flow upward in its upper part and the screen surface drop away from under the load at the forward end of the path.

Low-head screen (Fig. 49). The box *a* is usually suspended at its four corners (holes *b*) by cables and springs, but may be supported on spiral springs on a foundation. Screen is normally horizontal. Vibration is produced by a pair of short horizontal shafts *a*, Fig. 50, rotating in opposite directions, and each carrying two counterweights *b*, all four of which are identical. The two shafts (one of which has a driven pulley) are connected by gear wheels *c*, to maintain synchronism. When the four weights are set so that their centers of gravity all lie in the plane of the shafts, as indicated, the components of force in this plane counterbalance, but the components at right angles thereto are additive and produce a strong vibration in a direction normal to the plane of the shafts. The mechanism is mounted inside the housing *c* (Fig. 49) on a bridge spanning the top of the screen box, and in such position that the perpendicular to the plane of the shafts makes an angle of 45° with the screen surface. The resultant of the vibratory impulses at an angle to the pull of gravity and the vertical supports produces a motion path in the frame that is generally elliptical, with the axis inclined toward the discharge end. The screen surface follows this path more or less. Hence the particles thereon receive upward impulses with a component toward

the discharge end when the cloth is on the upstroke, and the cloth drops from under and backward on the down stroke, whence the particles, falling freely, reach the surface again nearer the discharge point than they left it.

Performance data are given in Table 45 and sizing tests of products in Table 45*a*.

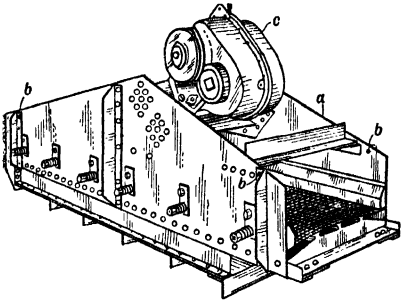

FIG. 49. Low-head screen (*Allis-Chalmers Mfg. Co.*).

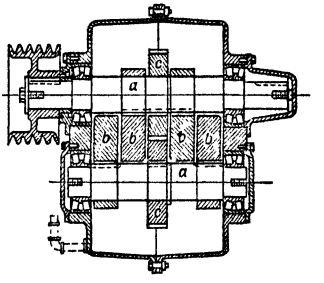

FIG. 50. Mechanism for Low-head screen.

Korb-Pettit screen is similar in principle to the Low-head but the box is supported on six or more flexible flat legs rigidly fastened at both ends and inclined about 45° toward the feed end. Vibration, thus oblique to the screen surface and with upward throw toward the discharge end, is produced by an unbalanced mechanism mounted on a bridge across the top of the box near its mid-length. The mechanism, driven by V-belt, consists of two unbalanced flywheels side by side but on separate and unaligned shafts, gear-connected. The flywheels are so synchronized and their supporting base is so tilted that their combined gyrating effects result in a motion normal to the supporting legs. The screen is said to operate when set level, or even with an upward slope. Usual speed is 800 to 900 r.p.m.

Table 45. Performance of Low-head screens (*Q*)

	Bunker Hill & Sullivan	Sunshine	Buffalo Ankerite
Screen: Width × length, ft	4×10	4×12	4×6
Wire diam., in	5/16	0.192	5/8 *u*; 3/16 *l*
Aperture, in	1×2	1/2×1	3/4 *u*; 1/2 *l*
Life, da	50	90 *c*	.....
Replacement, man-hr	1/2 hr.	.....	6
Blinding	None	Slight	.....
Speed, r.p.m.	.....	1,280	1,800
Feed: Material	Mill feed	*b*	Jaw-crusher product
Size	*a*	*a*	.....
Per cent. moisture	3.3	2	3
Tons per hr.: New	200	52.5	50
Total	220	90	50
Tons per sq. ft. per hr	5.5	1.9	2.1
Tons per sq. ft. per 24 hr. per mm. of aperture	5.2	3.6	2.6 *u*
Effect of moisture on capac	Reduces	Reduces	Blinds
Power, hp	7 *l*	5 *l*	5 *l*
Drive	Pulley & gears	V-belts	Tex-rope
Per cent. undersize in oversize	28.8	*a*	*a*

a See Table 45*a*.
b Sericitic quartzite and siderite.
c Wire is of alloy-steels, Tyloy, Superloy, etc.
l Installed power.
l Lower deck.
u Upper deck.

Eliptex screen. A diagrammatic sketch is shown in Fig. 51. Screen box *a* is substantially horizontal and carries one to three decks *b*. Supports *c*, each comprising two short vertical helical springs on a rigid foundation, are located as shown near the four corners of the box. The vibrating mechanism *d* is mounted eccentrically on the eccentrically shaped plates *e* extending well above the sides of the box. The mechanism comprises two unequally unbalanced shafts, oppositely rotated, with their axes in inclined plane *f*–*f*. The location of the shafts is about two-thirds

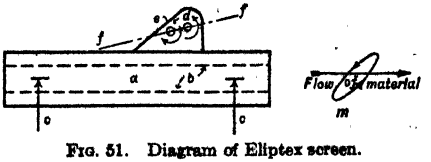

FIG. 51. Diagram of Eliptex screen.

Table 45*a*. Sizing tests on feed and products of Low-head screens (See Table 45)

Bunker Hill & Sullivan		Sunshine Mining Co., Kellogg, Id.				Buffalo Ankerite Gold Mines			
Mesh	Feed	Mesh	Feed	Oversize	Undersize	Mesh	Oversize of 3/4-in. screen	Oversize of 1/2-in. screen	Undersize of 1/2-in. screen
	Per cent.		Per cent.	Per cent.	Per cent.		Per cent.	Per cent.	Per cent.
1.05-in.	14.6	1-in.	8.9	20.7	.....	5/8-in.	95.2	11.5	.....
0.742	18.2	1/2	29.6	60.6	4.1	1/2	2.0	47.3	.....
0.525	18.1	1/4	33.0	16.4	49.4	3/8	0.4	35.5	7.2
0.371	10.7	10-m.	13.5	0.5	21.9	1/4	0.1	0.7	18.5
0.131	19.7	<10	15.0	1.8	24.6	10-m.	0.1	0.5	45.1
0.046	6.3		100.0	100.0	100.0	20	0.3	0.5	8.0
0.0232	2.8					40	0.4	1.0	4.0
0.0164	1.3					60	0.2	0.4	1.5
0.0082	5.0					80	0.1	0.3	1.5
<0.0082	3.3					100	0.1	0.2	0.7
	100.0					150	0.2	0.2	0.7
						200	0.1	0.2	0.8
						<200	0.8	1.7	12.0
							100.0	100.0	100.0

of the distance from feed to discharge end. The combination of eccentric setting of the mechanism and its internal unbalance results, of course, in distortion of the motion curve. The form and direction thereof, as stated by the manufacturers, is shown in item *m*, Fig. 51.

Screen cloth is stretched transversely and appreciably bowed upward to the longitudinal center plane.

Tension on screen surfaces is the usual method of transmitting vibration, however produced, to the load on the screen. One or two manufacturers dispense with it, depending on a grid supported on the walls of the box, to which the screen surface is bolted, for transmission. But adjustable tension provides a means of controlling amplification of primary vibration to a certain extent, and is generally considered desirable. Tension also tends to eliminate valleys in the screen surface—in which material piles into relatively thick layers difficult to screen. It introduces, however, a mechanical problem in that fatigue tends to cause screen breakage along the edges of the tension grips unless special provision is made to prevent flexure stresses at these points. The various forms of tension application shown in Fig. 52 are designed with the aims to prevent flexure, reduce wear, and facilitate quick change.

The essential element in all forms of flexure-preventing mountings is a means to transfer the rocking point or line from the screening surface to the stretcher. This is done most simply by attaching the stretching members in the plane of the stretched surface and providing rocking bearings for them against the walls of the box. A simple form is shown in Fig. 52, item *a*, in which the shank of the stretcher hook is in the plane of the cloth, the hole in the side wall *w* is larger than the shank, the seat of the spring cage against the edges of the hole is conical or spherical, and the hole therein for the shank is large enough to permit considerable play. This construction causes the cage to seat in proper alignment during tightening and transfers rock to the outer plate of the spring cage. A more elaborate form of support employing the same principle is shown in item *b*. This form, which is used in modern Hum-mer screens, is designed to decrease damping of vibration along the edges. Item *c* shows a form of stretcher designed for quick change, in which the rocking point is transferred to the bent edge of the screen surface. The disadvantage of this is that, if any rock occurs, wear occurs simultaneously. This wear may be transferred to a strip of steel pressed onto the edge as in item *d*. If, however, this type of stretcher is modified as in *d* by placing the angle *s* under the screen, the tendency is to transfer the flexure line back to the screen. Another form of bent-edge stretcher is shown in item *e*, in which the stretcher strip has spring bolts as in item *c*; *B* is a rubber-edged skirt board that is swung up out of the way when screen is to be changed. Item *f* shows the use of two stretchers when a heavier backing screen is used with fine screen under heavy loading conditions. Item *g* shows a simple springless form used for longitudinal stretching.

Fig. 52 shows also different methods of gripping the screen surface. Heavy coarse screen may be gripped as in *a* by welding the outer rod to the rods that it crosses. Coarse screen (rods 1/8-in. diam. and up) are usually bent at the gripping edges as in *c*, and usually no further preparation is necessary. With

finer yet relatively coarse cloth, the bent edge is reinforced by bending a selvage strip with the wire, as in *d* (some manufacturers make this selvage strip or its equivalent with steel rubber-covered on the wire side); or welding on a bent strip, as in *e;* or welding or bolting on an angle or strap as in *g* and *b* respectively. With fine cloth, straps or an angle and a strap are placed one each side of the cloth, best with rubber between them and the cloth, and bolted through.

Amount of tension applied differs with the weight of the cloth, and the camber of the whip-preventing frame that underlies the cloth. One manufacturer uses springs in the tension bolts with a sufficient number of bolts to give a maximum of 5,000 lb. per linear ft. When the tension bolts are not spring-mounted, care must be exercised not to overpull light cloth. Best pull must be learned by experience in operation. Cloth with rectangular openings should be placed with the long dimension of the openings

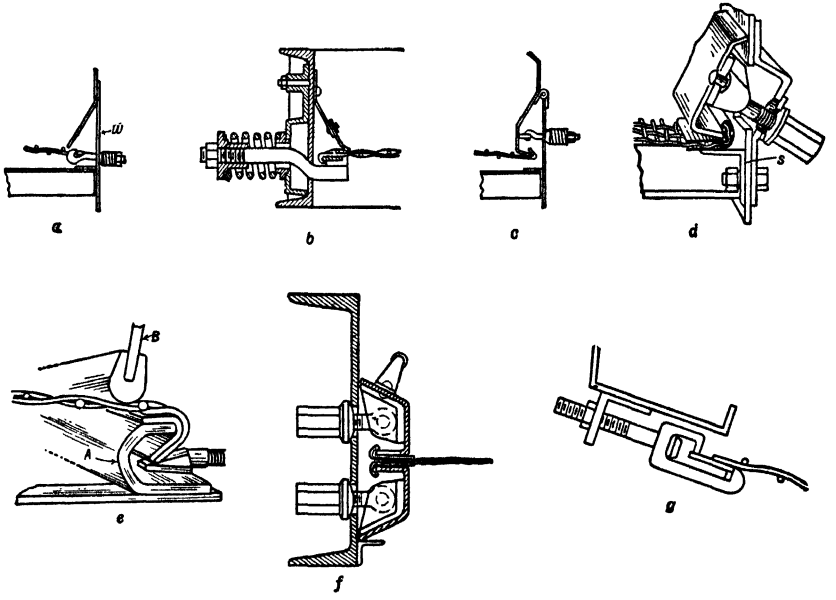

FIG. 52. Forms of tension grips for vibrating screens.

in the line of pull in order to put the tensile strain on the greater number of wires; these wires are also the harder. Grips should be parallel to insure uniform tension. Plentiful use of rubber at all contact points is advisable.

Wear is greatest, of course, at the feed end of the screen. Panels should, therefore, be so made as to be reversible end for end.

Effect of whip is to increase blinding, since the cloth is stopped suddenly against the whip frame at the end of the down stroke.

Decks. Multideck screens (2 to 4 decks) are used to save headroom, but this is invariably done at a sacrifice of efficiency, since intensity, slope, and feed rate are critically related to aperture and limiting size of feed to a deck. Intensity is substantially the same on all decks. Best feed rate to two or more decks will rarely, if ever, correlate with the desired screen sizes and the size distribution in the feed to the top deck. The decks may be set at different slope, but this is merely a palliative. The fine decks usually limit the capacity, blind most, require the most screen changes, and are most difficult to watch or to get at for patching or change. Most manufacturers recommend against the use of more than two decks, and this is the limit in ore-dressing plants.

Slope. See under "Operation," p. 62.

Support. Screens in which the screening surface only is vibrated are usually supported directly on the building framework. The vibrating-frame types must be insulated in some way from the building frame. This is done either by supporting the vibrating part on springs or on rubber or by hanging it on flexible supports. Either method may be used in any particular case, but unless special structural demands are prevailing it is usual to suspend the smaller screens and support the larger. Some manufacturers recommend rubber support rather than springs on account of danger of spring breakage. Cables are usually used for hanging because they respond better to the lunging that occurs when screens are started and stopped. A compression-spring cage is usually fitted to one end or

the other of cable suspensions. Large eyes should be used at both ends of the cables. One manufacturer pictures different forms of suspension as in Fig. 53.

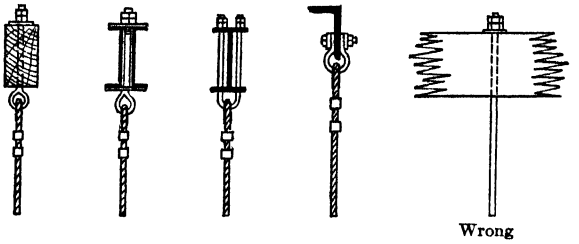

FIG. 53. Methods of hanging vibrating screens (*after Robins*).

Feed and discharge chutes should be given 3 to 6 in. clearance to allow for operating changes in slope and for lunging of the screen at start and stop. Feed box should distribute the material across the screen, should feed on with as little drop and velocity as possible, and preferably in a direction opposite the slope. A common arrangement is shown in Fig. 54. Length of box should be width of screen less 12 in. and box should be centered. Dimension *A* should be 12 in. for limiting sizes up to 3 in., 18 in. for 3 to 6 in. limiting sizes, and 24 in. for >6-in. limiting. The back (low side) should be high enough so that material at repose will reach the ends of the box. The front should be high enough to prevent splash or spill from the feeder (elevator or conveyor). Dimension *B* should be adjustable between two and three times the limiting-feed size. Dimensions *C* and *D* should be two to three times limiting-feed size. The angle lengthwise of the bottom is a stiffener. A replaceable wear strip should be provided along the discharge edge.

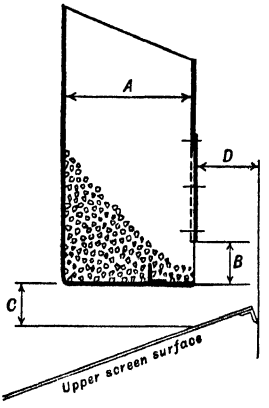

FIG. 54. Gravity distributor for screen feed.

Manufacturers. Allis-Chalmers Mfg. Co., Cort & Sons, Deister Machine Co., Denver Equipment Co., Fraser & Chalmers, Gifford-Wood Co., Jeffrey-Traylor Co., Link-Belt Co., Nordberg Mfg. Co., Overstrom & Sons, Productive Equipment Corp., Robins Conveyor Belt Co., Smith Eng. Wks., Stephens-Adamson Mfg. Co., W. S. Tyler Co., Williams Patent Pulverizer and Crusher Co.

9. OPERATION OF VIBRATING SCREENS

Selection of the most suitable operating conditions usually involves a number of compromises, according to the end sought. The mechanical variables available are slope, intensity of vibration, and, with some screens, direction of impulse. Type of screening surface and aperture are made operating variables in many plants. Variable results are tonnage, efficiency, and life of covering.

Intensity of vibration must be sufficient, in order to aid flow of material over an inclined screen, to at least tilt particles over the obstructions formed by the uneven contour of the screen surface. If the inclination is too slight for the particle to roll when tilted, the vibratory impulses must throw it clear of the surface, and their direction and speed must so correlate that the particle, when it again falls onto the surface, is nearer the discharge end than when it left. Additionally the intensity must be sufficient to lift out particles caught in meshes but unable to pass. It is apparent, then, that intensity must be greater the larger the particle, the heavier the load, the lower the slope, and the greater the tendency to blinding. Intensities recommended for eccentric-drive machines are given in Table 46.

Table 46. Intensities recommended for eccentric-drive screens (*After A. D. Sinden*)

Apertures, in.	Speed, r.p.m.	Amplitude, in.	Intensity
1/16 –1/8	1,200	0.12	144
1/8 –5/16	1,200	0.15	180
5/16 –3/4	1,200	0.18	220
3/4 –1 1/2	1,000	0.25	250
1 1/2–2	1,000	0.27	270
2 –3	900	0.35	315
3 –4	900	0.40	360

Screen movement has the further effect, the more important the heavier the load, of agitating the bed and causing stratification therein according to size, large particles at the top. With on-screen loads one particle deep, which is the ideal condition for presentation, maximum efficiency will be obtained when the intensity is such that a particle of the same size as the effective screen opening (or, on an inclined screen, the horizontal projection of the opening) hits each opening as it progresses along the screen surface. This desideratum must be, of course, modified by the necessity to move the larger oversize.

Over-intensity interferes with stratification, tends to jump near-mesh particles out of apertures before they have had a chance to adjust themselves through, increases length of particle jumps with the result that the effective length of screen is decreased, and increases repair bills for both screen covering and mechanism. Under-intensity decreases capacity and increases blinding. Less intensity is necessary for a given travel with con-flow rotation on closed-path machines.

Intensity is controllable through speed and amplitude. The former is not a variable with magnetic vibrators; it is by pulley changes, with mechanical types and is the control recommended by some operators. In most cases, however, amplitude is changed, because of greater simplicity and the shorter steps readily available. In general, high speed and a stroke as short as will prevent blinding gives highest efficiency for the finer screening; in coarse screening, satisfactory efficiency is usually obtainable at any stroke that will move the bed. When high tonnage is the desideratum, amplitude must be increased in order to agitate the thick on-screen load sufficiently to stratify and flow it rapidly.

Slope, once the point of initial flow of material is passed, acts jointly with intensity to determine rate of movement, and the resultant velocity taken with the feed rate determines thickness of bed. Slopes necessary for flow, all other things being equal, vary with the material treated. A Niagara screen required only 11° slope for a 1 1/4-in. screen fed with gravel, but 18° on a 1/4-in. screen taking undersize from the first. The same type of screen handling wood chips required 24 to 30°. Crushed rock always requires higher slopes than gravel. Slope must be steeper for counterflow than for con-flow rotation, and for low- than for high-intensity vibration. In general, the flatter the slope, the thicker the bed, the greater the load, and the more blinding, screen wear, and shock on the mechanism. Conversely, the higher the slope, where gravity is an important force in flow, the more missed apertures and the greater the length required for a given efficiency.

Slopes above about 23° begin to reduce the aperture and, consequently, the percentage of opening of square-mesh screens markedly. The effect on rectangular mesh, even when set transversely, is much less marked.

Horizontal screens should be used for normal screening service only when the headroom thus saved is necessary. N. Weil (*PC*) reports that a pitch as small as 2 to 5° increases capacity materially and correspondingly decreases maintenance. They are useful in dewatering or washing and scrubbing.

Direction of vibration is not an operating variable with linear-path screens, but with closed-path machines it may be made so by use of a reversing motor. Where high capacity is the desideratum con-flow rotation should be used; for high efficiency, counterflow. Con-flow operation will pass a given tonnage of oversize with about 8° less slope than counterflow.

Character of covering. It is usual practice at mills where moisture content of screen feed varies through wide limits to change to screens with larger aperture when, *e.g.*, the rainy or winter season comes along, and *vice versa*. Screen changes require but a few minutes with vibrating screens and much can be done cheaply in ore-dressing plants in the way of control of capacity and efficiency by maintaining a set of screens of different types of surface and different shape and size of aperture to meet varying conditions of feed. Such practice but borrows a leaf from the book of the industrial screening plants, where constancy of covering on a screen is the exception rather than the rule.

It is worth noting that flat slopes, heavy screen loads, and high intensities are hard on screen coverings and that coverings are usually the largest item of expense in vibrating-screen operation.

Capacity. For general discussion see Art. 2.

Overflow method of estimating capacity of eccentric-drive machines is proposed by A. D. Sinden (*PC*). Basic feed rate F_1 is defined as tons per hr. per ft. of screen width that will screen with maximum efficiency at 18° slope with the vibration intensity given in Table 46. The value for F_1 is given by the equation $F_1 = 10QW/C$ where Q is aperture of the square-mesh separating screen in in., W is weight of material in lb. per cu. ft. of struck volume, and C is the percentage of critical size (see Art. 2; here taken as the range 0.75 Q to 1.5 Q). Actual feed rate $F = F_1R$, where R is a factor dependent upon the effi-

ciency factor Z (Art. 2) and the intensity of vibration I. Values of R corresponding to different values of Z and I for 6- and 8-ft. lengths of screen surface are given in Fig. 55. Width of screen is $M = T/F$, where T is hourly tonnage of total feed.

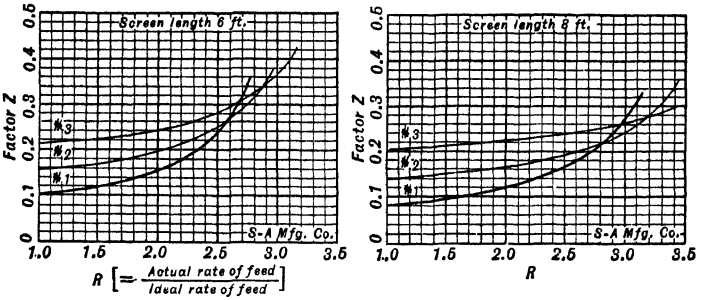

No. 1. Normal vibration intensity.
No. 2. Vibration intensity 50% above normal.
No. 3. Vibration intensity 100% above normal.

FIG. 55. Factors for Sinden screen-capacity formula.

Example. Wanted the size of screen required to separate 250 tons per hr. of bank-run gravel (W = 100 lb. per cu. ft.; size distribution as in Fig. 56.) on a 1-in. square opening, yielding an oversize product containing not more than 10% undersize.

From Fig. 56 there is 20% of critical size (C) in the feed. Hence $F_1 = 10 \times 1 \times 100/20 = 50$ tons per hr. From the specification, $Z = 0.10\ (33.3)/20 = 0.17$. The corresponding value of $R = 2.1$ may be read from the curve #1, Fig. 55, for a 6-ft. screen. This length is chosen because the gravel is free-screening and the efficiency requirement relatively low. For the same reasons, standard intensity will serve. Hence $F = 50(2.1) = 105$ tons per hr. and $M = 250/105 = 2.4$ ft., or a 3 × 6-ft. screen would be required.

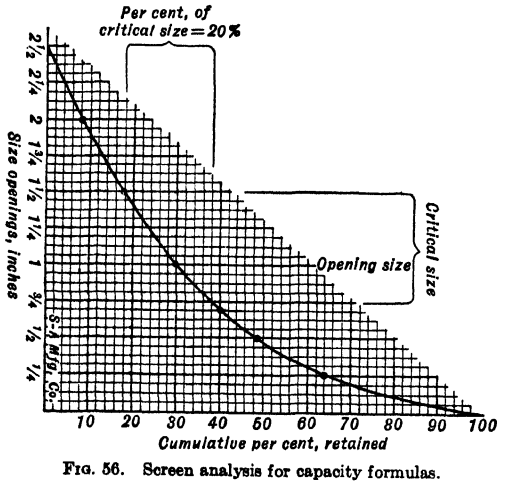

FIG. 56. Screen analysis for capacity formulas.

Through-flow method for eccentric-driven machines is used by Smith Engineering Works (*their Bul 266 K*). The basic through-flow T_F in tons per hr. per sq. ft. of screen cloth area with square apertures of a given size is shown in Table 47 for stated conditions of efficiency (95%) and percentage oversize (25%) in feed. Actual through-flow (same units) is given by the equation $T_A = T_F VEHwD$, where V is a factor (Table 48) corresponding to the amount of oversize of the separating screen present in the feed, E (Table 48) corresponds to the percentage efficiency (by recovery formula, Art. 2) specified, H (Table 48) is the HALF-SIZE FACTOR, corresponding to the percentage of material in the feed that would pass through a screen of half the aperture of the separating screen; w (Table 47) is a wetness factor which takes into account the advantage of wet screening; and D is a factor taking into account the lower efficiencies of added decks, having the values 0.9 for the second deck and 0.75 for the third. (A value of 0.8 is recommended by Allis-Chalmers.) Tonnage of undersize T_U in the hourly feed T is $T(1 - v)$, where v = decimal fraction of oversize. Area of screen surface required $A = T_U/T_A$.

Dimensions of the screen to be chosen to give the required area depends upon the shape characteristics of the particles, efficiency requirements, mineralogical nature of the feed, the form of the distribution curve, and a number of further imponderables embraced collectively under the name "experience." In a way, this means that certain of the elements of the factor tables are weighted twice. Perhaps the safest approach is to bear in

Table 47. Basic rates T_F and wetness factors w for through-flow screen-capacity equation (*After Smith Engineering Works*)

Aperture, in.; sq. mesh	1/32	1/16	1/8	3/16	1/4	5/16	3/8	1/2	5/8	3/4	7/8	1	1 1/4	1 1/2	2	2 1/2	3	4	5
T_F *b*																			
Gravel			0.72		1.08		1.40	1.68	1.94	2.16	2.36	2.56	2.90	3.20	3.70	4.05	4.30	4.65	4.90
Crushed stone			0.56		0.88		1.19	1.40	1.60	1.80	1.96	2.12	2.40	2.68	3.10	3.38	3.60	3.86	4.07
Coal			0.43		0.68		0.88	1.04	1.21	1.36	1.48	1.60	1.83	2.00	2.31	2.53	2.69	2.91	3.06
w *a*	1.25	3.00	3.50	3.50		3.00	2.50	1.75				1.25							

a Based on the use of at least 5 to 10 g.p.m. of water per cyd. (struck measure) of feed per hr.
b Based on 95% efficiency and 25% oversize.

Table 48. Oversize factor V, efficiency factor E, and half-size ratio H for through-flow screen-capacity equation (*After Smith Engineering Works*)

Percentages *a*	10	20	30	40	50	60	70	75	80	85	90	92	94	96	98
V	1.05	1.01	0.98	0.95	0.90	0.86	0.80		0.70	0.64	0.55	0.50	0.44	0.35	0.20
E						2.10	1.70	1.55	1.40	1.25	1.10	1.05	1.00	0.95	0.90
H	0.55	0.70	0.80	1.00	1.20	1.40	1.80		2.20		3.00				

a Oversize in feed; specified efficiency (recovery-formula method, Art. 2); or percentage on whole feed less than half-size of the separating aperture.

mind that capacity is a matter of width rather than length; that efficiency is more a matter of length; that experience has led to a general minimum ratio of length/width = 2 for reasonably close sizing of free-screening material; that good screening of free-screening material requires at least 6 ft. in length unless some especially favorable factor is present; and that additional length to overcome a particularly unfavorable situation should be added on rather than included in the area estimate. For the effects of moisture in the difficult range (4% to enough to render the pulp reasonably mobile) see Art. 2.

Example. Take the conditions of the preceding example (p. 64). T_F from Table 47 is 2.56; V from Table 48 is 0.98; E, for an efficiency of 95%, is 0.98; H is 1.20; w for dry screening is 1.0; and D is 1.0, since only one separation is required. $T_A = 2.56 \times 0.98 \times 0.98 \times 1.20 \times 1.0 \times 1.0 = 2.94$. $A = 250 (1 - 0.3)/2.94 = 59$ sq. ft. Eccentric-driven vibrating screens are available in widths up to 6 ft. Since 6-ft. width would give a length less than twice the width and 5 ft. would give one more than twice, choose 5-ft. width. Lengths over 6 ft. usually go in 2-ft. steps, hence a 5×12-ft. screen would be required to satisfy requirements. A 6×10-ft. screen would serve, since the material is easy screening. A 4×10-ft. screen would probably be sufficient if water were used.

Total-feed method is used by Link-Belt Co. (*PC*) for both eccentric-drive and unbalanced-pulley type vibrators. Basic rates in terms of total feed T_T of a given struck-volume density, dryness, and percentage undersize are given in Table 49. Values of factors V, H, E (defined as in the preceding case), and a moisture factor m are given in Table 50.

Table 49. Basic capacity factors for mechanically vibrated screens (*After Link-Belt Co.*)

Limiting size of undersize	Screen aperture, in.	Diam. of wire, in.	Clear opening, %	T_T, tons per sq. ft. per hr. [a]	
				Eccentric-drive	Unbalanced-pulley
3 3/4-in.	4	3/4	71	16.6	
3 1/2	3 3/4	3/4	69	16.1	
3 1/4	3 1/2	5/8	72	15.6	
3	3 1/4	5/8	68	15.0	
2 3/4	3	5/8	68	14.5	
2 1/2	2 3/4	1/2	72	13.9	
2 1/4	2 1/2	1/2	69	13.5	
2	2 1/4	7/16	70	12.9	
1 7/8	2	3/8	71	12.5	
1 5/8	1 3/4	3/8	68	11.9	
1 3/8	1 1/2	5/16	68	11.5	9.2
1 1/4	1 3/8	1/4	72	11.2	
1 1/8	1 1/4	1/4	70	10.9	8.8
1	1 1/8	0.225	68	10.7	
7/8	1	0.225	67	10.4	8.5
3/4	7/8	0.207	65	10.0	8.0
5/8	3/4	0.192	63	9.3	7.5
1/2	5/8	0.192	58	8.7	7.0
3/8	1/2	0.162	57	8.2	6.5
5/16	3/8	0.135	54	7.2	5.8
3-m	5/16	0.105	56	6.8	5.4
4	1/4	0.105	50	6.2	5.0
6	0.128	0.072	40	2.8	2.2
8	0.104	0.063	39		2.0
10	0.078	0.047	39		1.8
12	0.065	0.035	42		1.6
14	0.055	0.028	44		1.5
16	0.048	0.023	45		1.35
20	0.0425	0.018	46		1.2
24	0.034	0.016	46		1.05
28	0.0277	0.014	44		0.80
35	0.0201	0.0132	36		0.78
48	0.0146	0.0104	34		0.50
60	0.012	0.008	36		0.40
70	0.0097	0.007	34		0.325
80	0.008	0.0062	31		0.250
90	0.0073	0.0053	34		0.225
100	0.0061	0.005	30		0.200

Not recommended

Not recommended

[a] Tons total feed with a density of 100 lb. per cu. ft. of struck volume, not to exceed 4% moisture, and containing 50% undersize of the separating screen.

Table 50. Factors for modification of basic capacity rates in Table 49

(After Link-Belt Co.)

Percentages *a*	Oversize factor *V*	Efficiency factor *E*	Half-size factor *H*	Moisture factor *m*
1–4	.....	.....	.....	1.0
5	.....	.....	.....	0.8
6	.....	.....	.....	0.6
7	.....	.....	.....	0.5
8	.....	.....	.....	0.4
9	.....	.....	.....	0.3
10	1.4	.....	0.4	0.2
20	1.3	.....	0.6	*b*
30	1.2	.....	0.8	.....
40	1.1	.....	1.0	.....
50	1.0	2.0	1.2	.....
60	0.9	1.8	1.4	.....
70	0.8	1.6	1.6	.....
80	0.7	1.4	1.8	.....
90	0.6	1.2	2.0	.....
92	.....	1.0	.....	.....
94	.....	0.8	.....	.....
96	.....	0.7	.....	.....
98	.....	0.6	.....	.....

a Oversize in feed; specified efficiency (recovery-formula method, Art. 2); percentage on whole feed less than half-size of the separating aperture; percentage of moisture.

b The usual remedy for the drop in capacity here indicated is to increase screen aperture and/or use screen of rectangular aperture with a ratio of length/width = >10.

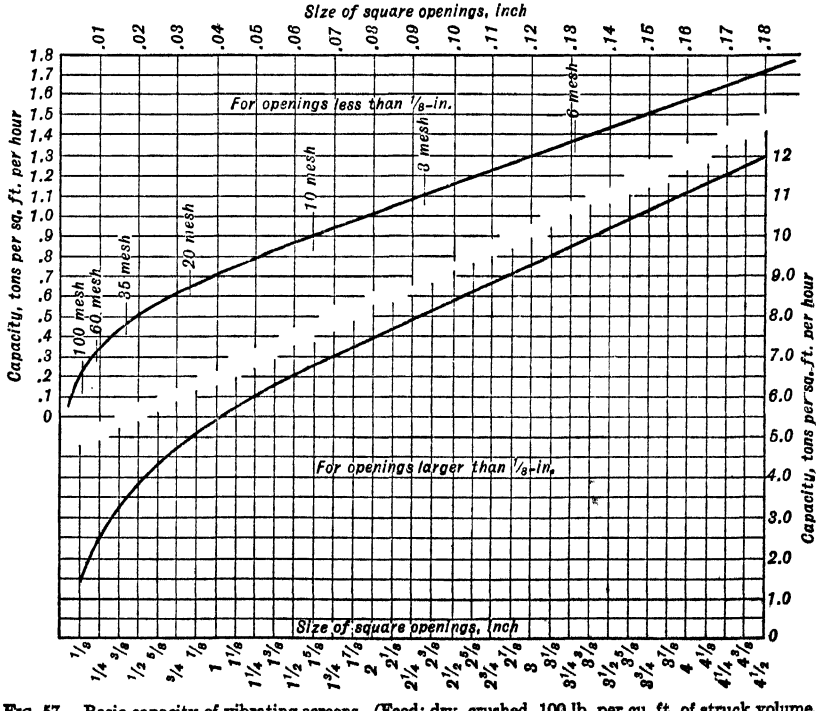

FIG. 57. Basic capacity of vibrating screens. (Feed: dry, crushed, 100 lb. per cu. ft. of struck volume, 40% less than half-size.)

Example. Take the conditions of the preceding example (p. 64). Basic rate per sq. ft. at 1-in. aperture for an eccentric-driven machine is, from Table 49, 10.7 tons per hr. Under the conditions imposed, $V = 1.2$; E (for 95% efficiency) $= 0.75$; $H = 1.2$; $m = 1.0$ (Table 50). Then $T_{T_{act.}} = 10.7 \times 1.2 \times 0.75 \times 1.2 = 11.6$ tons per hr. per sq. ft. $A = 250/11.6 = 21.5$, which can be handled by a 4 × 6-ft. screen.

Allis-Chalmers uses the total-feed method for eccentric-driven (Aero-Vibe) and for unbalanced-pulley (Low-head) mechanical screens, as well as for the magnetically vibrated (Utah) type. Basic capacity in tons per sq. ft. per hr. is taken from Fig. 57. Factors are applied as in Table 51.

Table 51. Factors modifying capacity of vibrating screens (*Allis-Chalmers*)

Percentages, *a*	Oversize factor, *V*	Half-size factor, *H*	Condition factors, *K* (Based on struck-volume weight of 100 lb. per cu. ft. as fed to screen)	
0	0.91	0.20	Dry quarried material, not exceeding 4% moisture	1.0
5	0.92	0.30		
10	0.94	0.40	Dry uncrushed gravel, not exceeding 6% moisture	1.25
15	0.95	0.50		
20	0.97	0.60	Wet screening, with sprays, material smaller than 1 in.	1.25
25	1.00	0.70		
30	1.03	0.80	Moist or dirty stone, or moist ore from underground	0.75–0.85
35	1.06	0.90		
40	1.09	1.00		
45	1.13	1.10		
50	1.18	1.20	Weight factors, *w*	
55	1.25	1.30	Coal	0.65
60	1.32	1.40	Struck-volume weight, 75 lb. per cu. ft.	0.75
65	1.42	1.50	Do., 150 lb. per cu. ft.	1.5
70	1.55	1.60	Other unit weights, in proportion	.....
75	1.75	1.70		
80	2.00	1.80		
85	2.65	1.90		
90	3.36	2.00		

a Oversize in feed; percentage on whole feed less than half-size of the separating aperture.

Example. Take the conditions of the preceding example (p. 64). Basic rate per sq. ft. at 1-in. aperture, from Fig. 57, is 5.4 tons per sq. ft. per hr. Factors, from Table 51, are: $V = 1.03$, $H = 1.20$, $K = 1.25$. $T_{T_{act.}} = 5.4 \times 1.03 \times 1.20 \times 1.25 = 8.4$ tons per sq. ft. per hr. $A = 250/8.4 = 30$ sq. ft., indicating a 4×8-ft. screen.

Stephens-Adamson publish (*Bul "The Vibrator Screen," 4/3/35*) the following approximate short form of total-feed equation for eccentric-driven screens: $A = TB/WQ$ in which T = tons total feed per hr., B is a basic capacity factor of 20 for square apertures or 13 for rectangular apertures, W is wt. per cu. ft. of struck volume in lb., Q is aperture in in. (width for rectangular mesh), and A is screen area in sq. ft.

Example. Applied to the conditions of the preceding example $A = (250 \times 20)/(100 \times 1) = 50$ sq. ft., or a 5×10-ft. screen.

Other Factors

Percentage of opening in the screen covering is usually taken as a linear factor in capacity, *i.e.*, capacity as estimated by any of the methods should be multiplied by the ratio of percentage opening of the screen selected to that of screen of the open area shown, *e.g.*, in Table 49.

Shape of opening also affects capacity. Ordinary rectangular screen with dry ore should be given a factor of about 1.1 in addition to that assigned for increased percentage of opening. For rectangular openings where length/width >6 Allis-Chalmers recommend a factor of 2.0 for dry feed. On moist ore the long rectangular openings may often warrant a factor of 1.5 and surfaces like Rod-deck or unsupported wedge-wire may need a factor of 2.0 or more.

Distribution of feed across the deck is essential. If this is not accomplished by the feeder, deck space is wasted until natural flow effects distribution. This occurs relatively slowly unless the covering is bridged along the centerline.

Intensity of vibration. The effect is suggested in Fig. 55. No other attempt at quantification is known to the author.

Comparison of methods. It is apparent from the screen sizes obtained by application of the various methods, ranging from 18 to 60 sq. ft. of one-deck surface, that either the experiences of the different engineers have been markedly different or the manufacturers are displaying widely separated degrees of conservatism. Published performance data are not of much help in deciding between the various formulas and factors for the reason that information as to nearness of approach to full capacity and as to moisture conditions in the mills is not generally available. Tonnages per hr. per sq. ft. as reported from concentrating plants are in general less than half of the most conservative of the formula figures, but performances are reported that exceed the highest. The question is important in closed-circuit work since overload on the screen is cumulative and soon floods a circuit. This is the probable explanation of the apparent light loads in practice. Since they represent majority opinion of a considerable number of independent engineers they must be given weight.

Capacity in scalping service is usually taken as much greater than where close sizing is desired because, being open-circuit, there is no danger of build-up. Sinden suggests the overflow-type formula $T_L = DMSW/400$ where T_L = allowable total feed in tons per hr., D = depth of layer at feed end, in.; M = width of screen in ft., S = rate of travel along screen, f.p.m.; W = weight in lb. per cu. ft. of struck volume. D may be taken as 2 to 3 times the mean diameter of oversize, *i.e.* (limiting size + aperture)/2. S may be 150 to 250 f.p.m. Load must be lively enough to permit stratification. Length should be from 1.5 times to twice width.

The contribution of size of aperture in this formula would seem to be too small, appearing as it does only as a part of D. It is suggested that the addition of G (= aperture in in.) to the numerator of the equation and an experimental coefficient K to the denominator would make it more useful.

Capacity of multiple-deck screens. A screen analysis of feed is essential. Knowing the rate of feed to the top deck, the respective tonnages over and through each of the decks (with given apertures) may be approximated by inspecting the size analysis of the feed. To determine the net capacity and the area required for a lower deck, recalculate the analysis of the undersize from an upper deck to 100% basis and consider this as feed to the next deck.

In any vibrating screen, the actual effective area is somewhat less than the product of its nominal dimensions (allowing for aprons, side plates, reinforcing bars, lack of distribution, etc.), and in almost all multiple-deck screens the upper end of a lower deck is usually loaded lightly, if at all. Effective screening areas on second and third decks are usually estimated at 90% and 75 to 80% respectively of the area of the top deck.

Example. A three-deck screen with apertures indicated in Fig. 58 is to treat 100 tons per hr. of dry material weighing 100 lb. per cu. ft. (K = 1.0) and sized as in Fig. 59. Distribution of tonnage (Fig. 58) is read directly from Fig. 59. UPPER DECK: From Fig. 57, basic capacity at 1.5-in. opening is 6.5

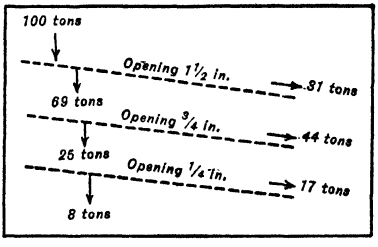

FIG. 58. Capacity analysis for three-deck vibrating screen.

tons per hr. Analysis shows 31% oversize, whence (Table 51) V = 1.04; also, 25% of <3/4-in. (half-size), whence H = 0.70. Hence $T_{T_{act.}}$ = 6.5 × 1.04 × 0.70 × 1.0 = 4.73, and A = 21.1 sq. ft. for feed of 100 tons per hr. MIDDLE DECK: As feed to this deck is only 69% of the original, its proportion of 1 1/2~3/4-in. is (69 − 25)/0.69 = 63.8%, whence V = 1.40. Similarly, the proportion of <3/8-in. (half-size) is 11/0.69 = 16%, whence H = 0.51. T_T (Fig. 57) at 3/4-in. is 4.7 tons per hr., whence $T_{T_{act.}}$ = 4.7 × 1.4 × 0.51 × 1.0 = 3.36, and to treat 69 tons per hr., required area is 69/3.36 = 20.5 sq. ft. Dividing by second-deck factor of 0.9 gives 22.7 sq. ft. BOTTOM DECK: Oversize in feed to this deck amounts to (25 − 8)/0.25 = 68%, whence V = 1.5. Half-size (<1/8-in.) constitutes 5/0.25 = 20%, for which H = 0.60. At 1/4-in. aperture, T_T = 2.3, whence $T_{T_{act.}}$ = 2.3 × 1.5 × 0.60 × 1.0 = 2.07 tons per hr., and A = 25/2.07 = 12.1 sq. ft. Applying the third-deck factor 0.75 this becomes 16 sq. ft. The controlling surface is the second deck. A 4×6-ft. screen will serve.

Lubrication. The bearings of closed-path mechanical vibrators are under heavy high-speed loads and require the best lubrication available. Before a vibrator is started in operation the manufacturer or a lubrication engineer experienced with this type of machinery should be consulted as to proper lubricants and methods of use.

Choice of a vibrating screen. Judging from practice, either heavy impact-type or eccentric-driven machines predominate greatly for screening at meshes down to 1 in. and maintain predominance down to 1/2 in. The impact machine is by far the cheaper; the eccentric-driven machines are better mechanically than any competing machine of impact type. Magnetic machines predominate for fine screening, say 6-m. down, but a part of this predominance is due to the fact that an efficient form, of good design, widely advertised, efficiently sold, and well serviced, has been in the field for many years. Many of the

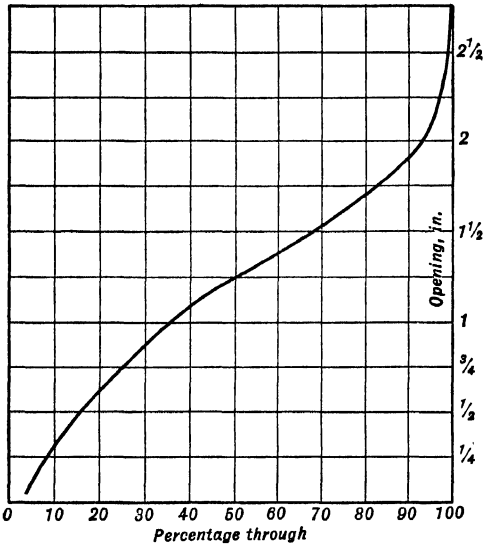

FIG. 59. Sizing analysis of feed for 3-deck screen calculations.

modern forms of unbalanced-pulley machines do good work in fine screening, they are cheaper in first cost, and the designs are improving steadily. In the intermediate field this type is being adopted rapidly.

The primary factor in choice of any screen in an ore-treatment plant is dependability. Operating costs are normally low and first costs are relatively low unless screening is a major part of the treatment schemes. But the screen is usually an important guard for one or more other machines or operations; normally the entire mill tonnage must pass through its meshes, and when it fails to function properly, or stops, the entire mill operation is affected. Hence choice should be checked and double checked against experience, and should lean toward tried and tested forms.

10. TRAVELING-BELT SCREENS

Callow traveling-belt screen (Fig. 60) is typical of this class. It consists essentially of an endless screen cloth *a* passing over rollers *b* so mounted that the upper surface is substantially horizontal. Rubber edgings are buttoned to the screen cloth to keep material on the screen. Feed is distributed over the width of the belt by means of a distributor, pulp is washed by sprays from box *e*, undersize is carried away in chute *f* and oversize carried over the tail roller is washed off by spray from box *g* and discharged through chute *h*. The standard duplex has two belts, each 2 ft. wide and 4 ft. center-to-center of rollers. The simplex has a single belt of same size. The usual speed is between 50 and 100 ft. per min., the lower speed for 8- to 20-m. screening, the higher for 100- to 120-m. Tearing of screen cloth due to recurrent bending around the pulleys is the usual cause of failure, rather than

Capacity is about 4 tons per sq. ft. of total screen surface per 24 hr. per mm. aperture. See Table 52.

Table 52. Performance of Callow screen (*After Cox, Gibbons and Porter, 14 CMI 526*)

Test number	Screen, aperture, mm.	Feed rate, tons per foot of width per hour	Feed rate, tons per square foot per 24 hr. per mm. *b*	Belt speed, feet per minute	Consistency of feed, per cent. solids	Undersize in feed, per cent.	Undersize in oversize, per cent.	Efficiency, per cent. *a*
1	0.21	0.53	4.7	90	21.7	55.5	40.0	46.7
2	0.21	0.48	4.3	86	20.9	36.4	14.1	71.2
3	0.21	0.46	4.1	86	15.6	40.2	16.9	69.9
4	0.21	0.43	3.9	86	12.2	39.8	13.6	76.2
5	0.21	0.94	8.4	86	22.2	21.4	8.8	64.5
6	0.21	0.35	3.1	86	19.6	42.4	18.2	69.7
7	0.13	0.32	4.6	100	16.9	35.3	13.6	61.5
8	0.13	0.54	7.8	100	23.8	13.1	7.0	51.7
9	0.13	0.28	4.0	100	14.5	5.2	1.7	67.7
10	0.13	0.27	3.9	100	14.5	13.9	4.4	71.4
11	0.21	0.53	4.7	90	20.9	20.2	10.3	54.5
12	0.32	0.80	4.7	80	26.3	34.4	23.5	41.6
13	0.32	0.66	3.9	80	25.6	28.8	14.0	59.6
14	0.42	0.96	4.3	80–110	29.4	42.1	27.7	47.4
15	0.42	0.70	3.1	80	23.2	39.8	23.2	54.3
16	0.63	0.96	2.8	65	29.4	73.4	61.1	43.2
17	0.63	0.96	2.8	95	27.0	76.9	62.5	50.0
18	0.63	0.69	2.1	80	24.4	74.5	55.6	57.4

a By recovery formula (Art. 2). *b* Of total screen surface.

Water required is 12 to 20 g.p.m. per duplex screen for 40- to 80-m. screening; it is somewhat lower at coarse sizes and higher at fine.

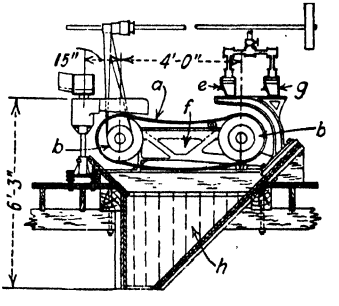

FIG. 60. Callow traveling-belt screen.

At MIAMI COPPER CO., prior to 1918, standard duplex screens equipped with 0.029-in. (0.74-mm.) rectangular-mesh cloth averaged 333 tons per screen per 24 hr. and for a month at a time handled as high as 435 tons per 24 hr. The pulp contained about 67% solids and no spray water was added. This is at the rate of 20.3 tons per 24 hr. per sq. ft. per mm. About 20% of the feed passed through the screen. Efficiency was about 60%.

The tests of COX, Gibbons, and Porter (Table 52) seem to indicate that the efficiency of the screen is greater at 60- and 100-m. than at 20-, 30- and 40-m.; but the tests on the coarse screens were all run with relatively high percentages of solid and tests 7 to 10 inclusive indicate that dense pulps screen much less readily than thin pulps. It is probable that the difference in consistency explains the apparently discrepant drop in capacity per square foot per millimeter on the coarser screens. Tests 16 and 17 indicate that 65 ft. per min. is too low belt speed for 20-m. screening.

The NEVADA-MASSACHUSETTS Co. employs Callow screens at both of its mills as sole means of preparing scheelite ore for table concentration. At Mill City, Nev. (*IC 6280*), with a mill-feed rate averaging 5.7 tons per hr., one 14-m. duplex screen moving 50 ft. per min. received the undersize of a trommel with 1/8×1/4-in. Ton-Cap cloth, plus its own oversize circulating through rolls. Undersize of the first Callow (the entire mill feed) passed to a second duplex with 22-m. cloth, moving 75 ft. per min. The third screen, a simplex, with 48-m. cloth moving 75 ft. per min., subdivided the undersize from No. 2. At the SILVER DIKE mill (*IC 6604*), with a mill-feed rate averaging 1.5 tons per hr., a simplex with 12-m. cloth moving 70 ft. per min. treated undersize from a 1/4-in. trommel, plus its own oversize circulating through rolls. Undersize of this Callow (the whole mill feed) was subdivided on a second simplex with 22-m. cloth moving 60 ft. per min.

Each of the three units in the MAGMA mill has a Callow duplex 14-m. screen in closed circuit with Marcy ball mill, passing 250 tons of undersize per day to tables, and circulating 125 tons additional load (*O*). Rate of travel, 110 ft. per min.; feed contains 40% water, and 360 gal. wash water per hr. are supplied. The bronze Ton-Cap screen lasts 90 days, and one man can replace it in 5 min. Blinding is

Table 53. Feed and products of Callow screens, Magma mill

Mesh	Feed	Oversize	Undersize
12	16.5	55.5	.....
14	13.5	25.0	2.7
28	20.0	13.5	17.0
35	9.0	2.5	11.5
48	7.5	1.0	11.3
65	6.5	0.7	11.0
80	3.0	0.3	7.0
100	3.0	0.2	6.0
150	4.0	0.3	7.7
200	3.2	0.3	4.9
<200	13.8	0.7	20.9
	100.0	100.0	100.0

practically absent. Efficiency in removal of undersize, 89%. Table 53 gives size analyses of feed and products of these screens as operating in 1930 (*IC 6319*), at which time they were equipped with 12-m. cloth and each passed 260 tons of undersize from a total load of 364 tons per day.

SECTION 8

CLASSIFICATION WITH WATER

REVISED AS TO DORR APPARATUS IN COLLABORATION WITH THE ENGINEERS OF THE DORR CO.

ART.		PAGE
1.	Principles of wet classification	01
	MECHANICAL CLASSIFIERS	
2.	Rake classifier	06
3.	Spiral classifier	14
4.	Drag classifier	15
5.	Hardinge countercurrent classifier	19
6.	Operation of mechanical classifiers	22
7.	Bowl classifiers	29
	NONMECHANICAL DESLIMERS	
8.	Sand tanks	35
9.	Slime tanks	42
	HYDRAULIC CLASSIFIERS	
10.	Free-settling hydraulic classifiers	43
11.	Hindered-settling hydraulic classifiers	47
12.	Design of hydraulic classifiers	55
13.	Centrifugal classification	58
14.	Density control	60

1. PRINCIPLES OF WET CLASSIFICATION

CLASSIFICATION, generally, is an operation in which a mass of grains of mixed sizes and different specific gravities is allowed or caused to settle through a fluid which may be either in motion or substantially at rest. SORTING is another name for the same operation. The fluid ordinarily employed is water, but other liquids, and air or other gases may be used.

Wet classification is used principally in ore dressing and hydrometallurgy. The usual ends served are: (*a*) To effect separation of sands from slimes, or of coarse sands or fine gravels from finer sands and slimes; in general there is no demand in this separation for differentiation on the basis of specific gravity of the grains, but more or less of such differentiation does occur. (*b*) To separate a long-range sand containing grains of different specific gravities into lots (SORTS or GRADES) characterized by the fact that the heavier grains in a given grade are smaller than the light grains. (*c*) To sort a long-range sand composed of grains of substantially the same specific gravities into a number of short-range grades.

General laws of wet classification

1. The relative settling velocities of particles of the same specific gravity and the same shape in a given liquid are dependent upon the sizes of the particles, the larger (and heavier) settling the more rapidly.

2. If particles are of the same size and shape but of different specific gravities, they settle at different rates proportional to their specific gravities.

3. If particles are of the same weight but of different shapes, their settling velocities will probably differ; the particles most nearly spherical will fall most rapidly; those most tabular, most slowly.

4. Resistance to fall in a given liquid is dependent upon the velocity of the falling particle. Resistance varies directly as the velocity when the latter is low, as the square of the velocity when the velocity is high, and as some intermediate power or powers in the transition range.

5. Velocity of fall in a given liquid, all other things being equal, varies as the squares of the diameters of the particles when these are very small, as the $1/2$-power of the diameters when the particles are relatively large, and as an intermediate power or powers in the transition range.

6. Resistance to fall increases with the density of the liquid.

7. Resistance to fall increases with the viscosity of the liquid. This increase is relatively greater the smaller the particle.

Formulas for falling bodies. When a body falls in a vacuum under the influence of gravity alone, its velocity v at any distance h from the starting point is given by the equa-

tion $v = \sqrt{2gh}$, g being the acceleration due to gravity. Inspection of the equation shows that the velocity at any point is dependent upon the distance from the starting point alone. When the body falls in a liquid medium, it encounters a resistance which is a function of its velocity; the velocity increases until the resisting force equals the gravitational pull; thereafter the particle falls at this constant (terminal) velocity.

The nature of the resistance differs according to the velocity of the body. When velocity is low, no considerable disturbance is set up in the body of liquid by the passage of the particle; the film or layer of liquid in contact with the particle moves with it while the body of liquid a short distance away is at rest. Substantially all of the resistance to movement is due to the viscosity of the liquid. Such resistance is called VISCOUS RESISTANCE. When the velocity of the body is high, the principal resistance is that offered by the liquid to bodily displacement from the path of the particles. The kinetic energy imparted to the liquid displaced is dissipated in eddying and turbulence. The effect of viscosity is relatively small. The resistance is called EDDYING RESISTANCE and TURBULENT RESISTANCE. At both high and low velocities of fall acceleration decreases rapidly and the body quickly attains uniform terminal velocity.

For spherical bodies Stokes' law for viscous resistance (*9 Pt II Trans. Camb. Phil. Soc. 51*) is:

$$R = 3\pi D\eta V \tag{1}$$

Newton's law for turbulent resistance (*Mathematical Principles of Natural Philosophy, Book II*) is

$$R = K\rho D^2V^2 \tag{2}$$

where R = resistance of the medium, η its viscosity and ρ its density; D = diameter of sphere and V its velocity with respect to the medium. These equations accord with experimental results through certain low and high ranges respectively, but in the intermediate range in which most wet classification is done, neither fits the facts.

Castleman function. Castleman (*Tech. Note 231 NACA*) showed that the experimental data on the fall of spheres in various fluids correlate throughout the Stokes and Newton and intermediate ranges if the results are plotted in terms of the dimensionless resistance function S, of the form

$$S = 2gD(\delta - \rho)/3\rho V^2 \tag{3}$$

in which g is the gravitational constant, and δ is the specific gravity of the solid. He showed that $S = f(N)$, where N is the Reynolds number (*174 Phil. Trans. Roy. Soc. Lond. 935*), which is related to the properties of the system by the equation

$$N = DV\rho/\eta \tag{4}$$

For purposes of use the relationships of Eqs. 3 and 4 are combined in the form

$$T = N^2S = 2g\rho D^3(\delta - \rho)/3\eta^2 \tag{5}$$

The value of T in terms of N is plotted in Fig. 1, in which D is cm., V is cm. per sec., and η is the coefficient of viscosity.

Use of Fig. 1. To find the falling velocity of a sphere under the influence of gravity alone, with respect to any surrounding medium, substitute the values for D, δ, ρ, and η in Eq. 5 and solve for T; read the corresponding value of N from the chart; then solve for V in Eq. 4.

The force of gravity F acting on a sphere submerged in any fluid is

$$F = 1/6g\pi D^3(\delta - \rho) \tag{6}$$

At equilibrium velocity, when Stokes' law applies, R (Eq. 1) = F, whence

$$V = gD^2(\delta - \rho)/18\eta \tag{7}$$

From Eqs. 4, 5, and 7 it follows that the relation between T and N in the Stokes range is

$$T = 12N \tag{8}$$

Similarly, when terminal velocity has been reached and Newton's law applies, R(Eq. 2) = F, and

$$V = \sqrt{g\pi D(\delta - \rho)/6K\rho} \tag{9}$$

From Eqs. 4, 5, and 9 it follows that the relation between T and N in the Newton range is

$$T \propto N^2 \tag{10}$$

The curves for Eqs. 8 and 10 are plotted on Fig. 1. Stokes' law begins to deviate from the experimental curve at a point somewhat below $N = 0.4$, which, for a quartz sphere in water, corresponds to about 0.074 mm. diameter or 200-m. Newton's law begins to coincide again with the experimental curve about where $N = 3.5 \times 10^3$; corresponding diameter of a quartz sphere is 12.7 mm. Thus throughout the range in which most wet classification is done, neither of the rational formulas holds, and no satisfactory formula for this range has been devised. Fig. 1, however, embraces all of the known and

unknown forces involved in the settling of single spheres in any homogeneous fluid under the influence of gravity alone and may be used for estimating behaviors under conditions approximating this. A similar curve may be drawn for a driving force other than gravity, by suitable modification of force factor g in Eq. 5.

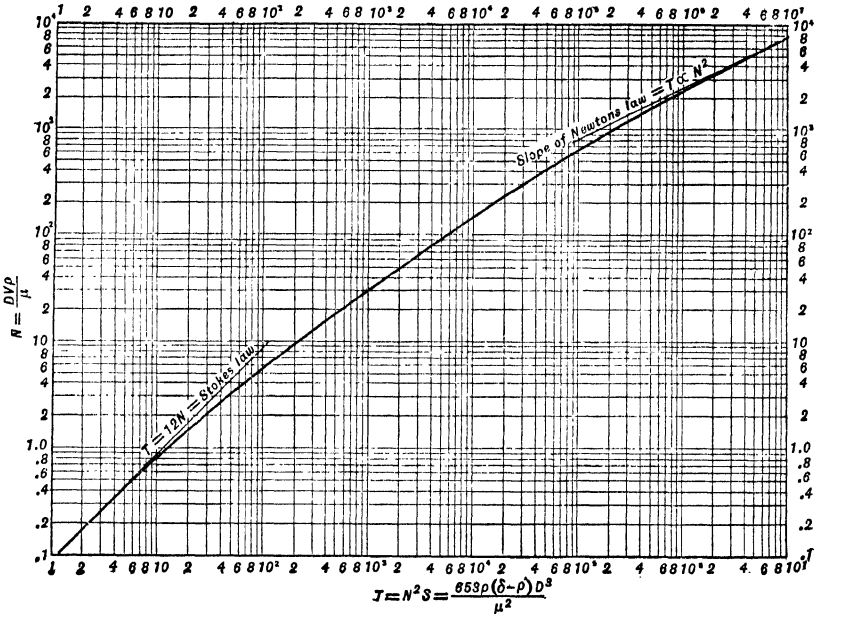

FIG. 1. Reynolds number *vs.* Castleman function for spheres.

Effect of shape. Settling velocities of mineral fragments in water depart considerably from those of spheres (Fig. 2). The cause for the difference is the difference in shape. Waddell (*5 Phys. 281; 217 JFI 459*) has shown, as indicated from Fig. 2, that the settling velocities of particles of a given geometrical shape fall on smooth curves generally parallel to the full curves of Fig. 2, but always below the curve of corresponding specific gravity, by an amount that increases with decrease in sphericity factor (ψ = ratio of surface of a sphere of the same volume as the particle to the surface of the particle) and with increase in size of particle (see Sec. 19, Fig. 134, Table 50). Equiaxed particles smaller than 0.8 mm. in diameter (20-m.) fall at rates closely enough to those of the curves of Fig. 2 to make such curves safe to use for estimation of settling rates of fastest particles of a given specific gravity under free-settling conditions.

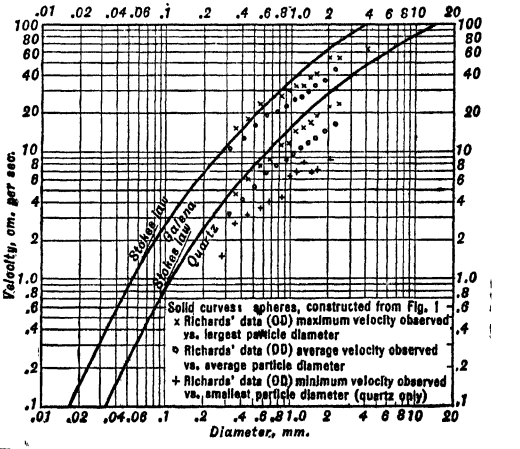

FIG. 2. Terminal velocities of quartz and galena free-settling in water at 20° C.

Hindered settling. Fig. 2 applies only to particles settling individually in bodies of water large with respect to the particles (FREE-SETTLING). If the diameter of the liquid column is less than ten times the diameter of the particle, the settling velocity decreases by reason of a so-called WALL EFFECT which, however, is of negligible importance in commercial apparatus.

A much more potent decrease in settling rate is brought about by the presence of other particles in the settling medium. When the number of these is great enough so that collision between particles occurs or is only near-missed (HINDERED SETTLING), settling rates decrease markedly below free-settling figures. The extent of decrease in falling rate is greater the heavier the particle, the smaller its diameter, the smaller its sphericity factor, the greater the extent of crowding, and the greater the tendency of particles to clump.

Table 1. Comparative free- and hindered-settling velocities of mineral fragments (*After Richards*)

Size of grain, mm.	Velocities, mm. per second					
	Galena, sp. gr. 7.5		Blende, sp. gr. 4.0		Quartz, sp. gr. 2.64	
	Hindered settling	Free settling	Hindered settling	Free settling	Hindered settling	Free settling
9.34	.....	.....	.....	.....	.....	.....
6.62	212	698	.....	.....	116	295
4.97	184	590	126	.....	113	249
3.40	142	505	91	.....	69	207
2.35	119	402	71	.....	50	166
1.70	90	350	59	263	41	134
1.21	77	273	43	227	32	106
0.83	52	213	35	181	21	80
0.56	36	175	25	143	13	60
0.40	25	125	17	109	.....	42
0.30	18	115	11	86	6.5	34
0.20	10	77	6.7	59	3.3	23
0.070	.....	28	.....	.....	.....	.....

Table 1 shows the effects of specific gravity and of grain size. It is consistent for all three minerals as to the effect of grain size. It is consistent as to specific gravity when comparison is made with quartz, but as between galena and blende, the decrease at any given grain size is greater for blende than for galena. This indicates that the sphericity factor for blende is sufficiently smaller than that for galena to cause this factor to predominate in the reduction in settling velocity.

Hindered-settling effects do not arise in well-dispersed ore pulps of the usual specific gravities, at the sizes normally subjected to classification, when the percentage of solids by

Table 2. Free-settling ratios of quartz and galena (*After Richards*)

Diameter of particles		Particles fall in currents of .. mm. per sec.	Particles rise in currents of .. mm. per sec.	Free-settling ratio	Free-settling ratio for spheres
Quartz, mm.	Galena, mm.				
0.030	0.019	0.00	1.26	1.54	
0.034	0.020	1.26	2.51	1.68	
0.057	0.029	2.51	5.05	1.82	2.0
0.077	0.041	5.05	7.42	1.96	
0.098	0.049	7.42	10.01	2.09	
0.14	0.061	10.01	14.68	2.23	
0.19	0.072	14.68	19.80	2.35	
0.23	0.103	19.80	30.12	2.48	
0.34	0.13	30.12	40.37	2.61	2.2
0.39	0.14	40.37	50.08	2.72	
0.52	0.17	50.08	60.09	2.82	
0.59	0.20	60.09	70.34	2.92	
0.66	0.24	70.34	80.28	3.03	
0.86	0.28	80.28	90.21	3.12	
1.02	0.34	90.21	99.54	3.21	
1.15	0.35	99.54	110.09	3.29	2.4
1.23	0.36	110.09	120.03	3.36	
1.29	0.38	120.03	130.43	3.42	
1.47	0.42	130.43	140.37	3.49	
1.60	0.46	140.37	150.31	3.54	
1.68	0.46	150.31	160.09	3.59	
1.75	0.46	160.09	169.95	3.63	2.6
1.80	0.52	169.95	180.57	3.66	
1.97	0.58	180.57	180.5	3.70	

weight is less than about 15. Hence Figs. 1 and 2 may be used for estimating fastest rates in such pulps. For higher pulp densities, in the absence of plastic effects, the curves may be used for approximations by using for ρ the value of the specific gravity of the pulp in the settling zone and by increasing η in proportion to the volumetric percentage of solids. The extent of justifiable confidence in the result decreases, however, at a somewhat greater rate than the assumed value of η increases.

Free-settling ratio of any two minerals is the ratio of the diameter of light-mineral grain to that of the heavy-mineral grain that is equal-settling with it under given free-settling conditions.

Free-settling ratios for spheres may be estimated for any two pure minerals on the basis of the diameters corresponding to a given velocity in Fig. 1. Ratios for actual particles may be estimated by modifying the settling relationships for spheres for shape according to the indications of Fig. 2. Actual ratios exceed those for spheres, except in the finest sizes, as may be inferred from Fig. 2 and as shown in Table 2.

Hindered-settling ratio. Hindered settling prevails in most mill classifiers except those handling the finest sizes. Since the effect of hindrance is greater on light than on heavy particles, it follows that hindered-settling ratios are greater than free-settling. Table 3 gives comparative values for the two ratios as determined by Richards (*41 A 396*).

Hancock (*63 #1 MM 16*) states that for short-range sands in teeter $y = ae^{-bV}$, where y = % solids by volume in the teetering sands, V = velocity of upward current in mm. per sec.; b = a constant for a given sand size, larger for fine sand; e is the Napierian base; and a is a factor, not necessarily the same as y_0, if the latter is the experimentally determined value for the settled sand when current ceases, since this is usually less than would satisfy the equation. For fine rounded sands the agreement between the two is close, but for angular crushed sand the spread is wide. The equation is said to hold for values of y_0 from 20% upward.

Table 3. Free- and hindered-settling ratios of various minerals with respect to quartz (*After Richards*)

	Free-settling ratios for 228.6 mm. per sec., fastest grains	Hindered-settling ratios
Copper	3.8	8.6
Galena	3.8	5.8 *b*
Wolframite	3.3	5.2
Antimony	3.0	4.9
Cassiterite	3.1	4.7
Arsenopyrite	2.9	3.7
Chalcocite	2.2	3.1
Pyrrhotite	2.1	2.8
Blende	1.6	2.1
Epidote	1.5	2.0
Anthracite		5.6 *a*

a Anthracite to quartz.

b In one test a quartz-galena hindered-settling ratio of 8.0 was obtained in a small, carefully run experimental classifier.

Utility of equations and ratio tables. As a matter of practical fact, predictions of performance of an actual classifier based on settling equations, curves, and tables are dependable for general order of magnitude only. They are useful in design when applied with generous factors of safety, suitable provisions for adjustment over a wide range, and due pessimism as to the accuracy of the prediction implied.

Character of classified products (SORTS; GRADES). Classified products from a natural ore have two distinct characteristics: (*a*) the grades are of different over-all size range; (*b*) each grade comprises a mass of particles of different shapes, sizes, and specific gravities, so assorted that the largest pieces are the most tabular grains of the lightest mineral; the smallest are the most rounded grains of the heaviest mineral; the intermediate sizes are a heterogeny of rounded grains of light mineral, the flatter grains of heavy mineral, and grains of intermediate specific gravity running the entire gamut of shape.

Purpose of classification in a mill is to utilize one or both of the above stated product characteristics. If sizing is the primary desideratum, if the split is to be made at a size smaller than 10-m., and if a considerable quantity of undersize in the oversize is permissible, a suitable classifier will make the split most cheaply of the apparatus now available, and the undersize will be relatively free of tramp oversize. If gravity concentration is the goal, then, in addition to rough sizing, differentiation by size on the basis of specific gravity is a desideratum in the feed to the concentrator. Such differentiation is attainable only in a classifier. Classifiers are also used for dewatering, desliming, occasionally for concentration of an already sized product, and, in certain special cases (Sec. 10, Art. 7), for concentration by washing.

TYPES OF CLASSIFIERS

Classifiers in a large variety have been designed and built. They may be grouped, however, into two main types on the basis of the direction of flow of the carrying current, *viz.*, horizontal-current classifiers, and vertical-current or hydraulic classifiers. The apparatus

of the first type accentuate the sizing function; those of the second, what may be called the classifying function, *i.e.*, assorting according to size, specific gravity, and shape. Each type has subtypes.

The principal horizontal-current apparatus (mechanical classifiers) have mechanical devices to agitate the pulp and to transport the settled grains away from the separating zone; the others, variously called sand tanks, spitzkasten, sand cones, desliming cones, and the like, are characterized by a tank converging downwardly to a spigot discharge for the settled grains. Horizontal-current classifiers normally, although not necessarily, make two products only.

Hydraulic classifiers are characterized by the utilization of a rising current of extraneous water (hydraulic water) to effect sorting. The principal type, because it does the best work, is the hindered-settling classifier, having a constriction in the sorting column; the free-settling type, without constriction, is rarely used except for the roughest type of work. The hydraulic classifiers are used primarily to separate long-range feeds, 10-m. or less in limiting size, into a number of grades, usually for subsequent gravity concentration. They are also used, to an increasing extent, for fine wet sizing of deslimed, relatively short range feeds composed of minerals with small specific-gravity difference, such as bank sands for concrete work and the like.

MECHANICAL CLASSIFIERS

A mechanical classifier is essentially a settling tank with parallel sides, a vertical or nearly vertical wall at one end, a sloping bottom which extends to a height above the top of the end wall, and a mechanism in the tank which serves both to agitate the pulp therein and to remove the settled solid. The conveying-agitating mechanism may be a reciprocating rake, a spiral, or a flight conveyor (Sec. 18).

The principal use of the mechanical classifier is in closed-circuit wet grinding (Sec. 5, Art. 12). Machines are available to rake as much as 1,000 t.p.d. of sand per ft. of tank width, which satisfies the circulation demand of any present-day grinding mill. Other milling uses are for desliming, dewatering granular material, and washing when scrubbing is unnecessary.

2. RAKE CLASSIFIER

Description. The apparatus comprises a tank, one or more rakes, and a mechanism for actuating the rakes. The tank (Fig. 3) has parallel vertical side walls *a*, a substantially vertical wall *b* at one end, and a sloping bottom *c* of such length that its upper end rises above the level of the top of end wall *b*. The tank is thus capable of holding liquid up to the level of the top of the end wall *b*. The rakes consist of a plurality of parallel blades *e*,

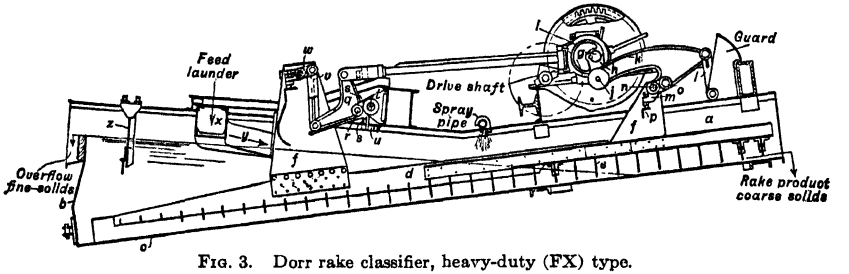

FIG. 3. Dorr rake classifier, heavy-duty (FX) type.

set perpendicular to tank bottom *c* and to the longitudinal axial plane of the tank. They are carried on a frame consisting of two parallel longitudinal members *d*, suitably cross-braced, and hung by plates *f*, two each side, from the actuating mechanism. The mechanism consists of a system of cranks, eccentrics, and links designed to propel the rakes in a path so shaped that each point in each blade describes a rough rectangle with long sides parallel to the bottom and the ends in the planes of the blades. Gear-driven shaft *g* revolves counterclockwise in Fig. 3, causing crank *h* to revolve. Pin *j* in the end of *h* causes the left end of connecting rod *k* to follow. The other end of *k* is pinned to, supported, and constrained by the upper end of link *l*, the lower end of which is pinned to a bearing on the tank. Members *f* are hung by pin *n* on link *m*, which, in turn, is hung on pin *o* on the connecting rod *k*. The lower end of link *m* bears adjustably against angle *p*, which is welded between members *f*. The effect of *p* is to prevent *m* from swinging downward on *o* but to leave *m* free to move upward around *o* under the influence of an upward force on *p*. Eccentric *i* actuates bell crank *q*, which rocks on fulcrum *r* that forms one end

of another angle lever *s* pivoted on *t* and actuated by adjusting screw *u*. The lower end of bell crank *q* is pinned to the lower end of link *v*, the upper end of which is pinned to a link *w*, similar in its action to link *m*. The motion paths of upper and lower members *f* are readily traced, and from them the paths of any part of the rake frame. Lift of the rakes is usually about 90 to 95% of the height of the rake blades (see Art. 6, ***Speed***).

Feed is introduced and flows thence over a distributing apron toward the high end of the tank. The heavier sands settle into the zone of the rakes and are raked up the slope and out of the tank; slime and the finer sands are carried over the rear wall (OVERFLOW LIP) in suspension.

Rating. Dorr rake classifiers are rated by model designation, which indicates the character of duty for which the classifier is designed, by the width and nominal length of tank, and by the number of rakes, side by side. (See Table 4.)

Table 4. Sizes and types of Dorr rake classifiers

Model No.	Duty	Range of widths, ft.	Range of lengths, ft.
FR.....	Light *a*.....	1 1/2 to 4	12 to 23 1/3
FH.....	Intermediate.....	4 to 5	18 1/3 to 30
F.....	Normal *b*.....	6 to 16	18 1/3 to 30
FX.....	Heavy.....	5 to 16	24 to 31 1/2

a Corresponds to old model C. *b* Corresponds to old model D.

The number of rakes side by side ranges from one (SIMPLEX) to six (SEXTUPLEX). Normal limit to the nominal width of one rake is 4 ft.; some have been built with 5-ft. rakes.

MODEL F is the standard machine for normal service in grinding circuits. The MODEL FX has deeper rake blades, longer stroke, and a sand-raking capacity 2 1/2 to 3 times that of the standard machine; the tank is extra heavy, the mechanism parts are of cast steel, bearings antifriction and pressure-lubricated. MODEL FR is light weight, suitable for operations in which the rake product is small. MODEL FH is intermediate in ruggedness between F and FR; it is recommended for small closed-circuit operations.

Code. An SSFR is a simplex steel-tank light-duty machine; a QSFX is a quadruplex steel-tank heavy-duty machine.

Tank for ores is usually of steel (S), *sometimes of concrete* (C); *wood* (W) *and special metals are* used for corrosion resistance. The second letter in the rating code signifies tank material.

Rakes are usually of steel, but they may be of wood or special metals for corrosion resistance. Number of rakes is indicated by the first code letter as simplex (S), duplex (D), triplex (T), quadruplex (Q), and sextuplex (Sx).

Manufacturers. Denver Equipment Co., Dorr Co., Morse Bros. Machinery Co., Western Machinery Co.

Data for estimation of capacities of Dorr models are given in Table 5; with suitable consideration for duty, they are applicable to any well-built machines of this type.

Table 5. Capacities (*a*) of standard-duty Dorr F classifier [c]

Mesh of separation	Capacity (*b*), tons dry solid per 24 hr.			Pool area, sq. ft. per ft. of tank width	Rake, strokes per min. *d*	Slope, in. per ft. *e*	Solids in overflow, %
	Sand per ft., of width	Overflow					
		Per ft. of width	Per sq. ft. pool area				
28	320 to 450	130 to 170	9.6 to 11.7	13.55 to 14.55	23 to 32	2 3/4 to 3 1/4	33
35	300 to 400	105 to 145	7.5 to 10.0	14.0 to 14.55	21 to 29	2 3/4 to 3	25
48	260 to 360	85 to 115	6.1 to 7.6	14.0 to 15.2	19 to 26	2 1/2 to 3	22
65	235 to 330	70 to 90	4.8 to 5.9	14.55 to 15.2	17 to 24	2 1/2 to 2 3/4	18
100	210 to 300	50 to 70	3.3 to 4.3	15.2 to 16.0	15 to 21	2 1/4 to 2 1/2	14 to 17
150	150 to 235	35 to 50	2.2 to 2.8	16.0 to 18.0	11 to 17	2 to 2 1/4	9 to 14
200	125 to 200	20 to 30	1.25 to 1.65	16.0 to 18.0	9 to 14	2 to 2 1/4	6 to 10

a Average conditions for ore of 2.70 sp. gr. *b* These figures are safe maxima rather than averages.

c To convert F classifier capacities to other types, multiply the above overflow and sand-raking capacities per foot of width by the following factors:

Slopes and overflow dilutions remain the same. (All types have approximately the same overflow capacity per sq. ft. of pool area.)

Type	Overflow	Sand
FR.....	0.65	0.50
FH.....	0.90	0.85
FX.....	1.25	2.85

d Use slightly higher rake speeds for FR; lower for FX.

e Slope for type FX is 2 1/4 to 2 1/2 in. per ft. for practically all separations; slopes for the other types the same as for F.

Performance data are given in Table 6.

Table 6. Performance of rake classifiers

Mill	Black Hawk Consol.	Peñoles	N. J. Zinc	Utah, Magna	Dome	Peñoles	S. F. of Mex.	Miami	Miami	Black Hawk Consol.	B. H. & S.	Gunnar	Cons. M. & S.
MACHINE CHARACTERISTICS													
Number of rakes	2	2	2 *d*	2	2	2	2	2	2	2	2	2	2
Duty *a*	*L*	*L*	*L*	*N*	*N*	*N*	*N*	*N*	*N*	*N*	*N*	*N*	*N*
Size, width×length of tank, ft	3×20	4 1/2×14 2/3	8×34	6×17 1/2	6×18 1/3	6×18 1/3	6×18 1/3	6×19	6×19	6×20	6×21 2/3	6×21 2/3	6×23 1/3
Slope, in. per ft	2	2 1/4	2 1/2	3 1/2	2 3/4	2 1/4	2	3	3	2 1/2	3	2 1/2	2 1/2
Speed, s.p.m.	26	24	25	16	17	22	30	29	29	24	24.5	16	15
OPERATING DATA													
Feed: Character *c*	Sil	Sul	Cal	Por	Sil	Sul	Sul	Por	Por	Sil	Qtz	Qtz	Sul
Specific gravity of solids	2.6	.....	3.9	2.7	2.9	.....	3.4	2.7	2.7	2.6	3.2	2.7	4.3
Solids, %	.....	40	.....	43	63	35	57	.....	61	80	70	.....	48
Tons new per 24 hr	100	250	3,025	196	870	250	600	2,918	1,075	200	248	160	1,615
Tons total per 24 hr	.....	470	3,025	730	870	500	1,500	2,918	1,631	920	1,040	1,210	1,945
Circulating load, %	.....	88	*e*	272	*e*	100	150	*e*	52	360	320	656	20
Limiting mesh	.....	20	.....	20	.....	.....	.....	3/8	8	.....	4	10	48
Overflow: % solids	.....	55 to 60	4.5 *e*	20	20	50 to 55	40	33	48	20	40	12	41
Mesh of separation	.....	.....	.....	65	100	48 to 65	48	28	28	65	65	100	100
Oversize of separating mesh, %	.....	.....	.....	1.7	.....	.....	.....	1.4	4.7	4	0.6	0.3	1.8
Sand: Tons per 24 hr	.....	220	1,441	534	320	250	900	2,500	556	720	792	1,050	330
Solids, %	75	82 to 85	81	72	82	85 to 88	81	81	77	73	81	82	83
Power consumed, hp	2.5	1.5	.....	4	2.5	2	2.7	3.5	3.5	7.5	.....	.....	2.5
Sizing tests *b*	*1*	*2*	*3*	*4*	.....	.....	.....	*5*	*6*	*7*	*8*	*9*	*10*
PERFORMANCES													
Overflow, tons per ft. per 24 hr	33	55	198	33	92	41	100	70	90	33	41	26	269
Sand: tons per ft. per 24 hr	.....	49	180	89	53	42	150	416	46	120	132	175	55
% finer than separating mesh	.....	.....	.....	56.6	.....	.....	67.6	18.8	56.1	51	42.8	21.5	84.0
% <200-m	4.0	6.0	.....	10.9	13.0	9.0	20.6	6.4	10.7	4	8.9	3.4	50
Separating efficiency *h*	.....	.....	.....	42.5	.....	.....	.....	46.7	59.5	46.5	31.6	47.7	40.7

Mill	Homestake	Cons. M. & S.	Falconbridge	Pamour Porcupine	Gold Road	Copper Range	Homestake	McIntyre	McIntyre	Utah, Magna	Aldermac	Aldermac	Cons. M. & S.
MACHINE CHARACTERISTICS													
Number of rakes	2	2	2	2	2	2	2	2	2	2	2	2	2
Duty *a*	*N*	*N*	*N*	*N*	*N*	*N*	*N*	*N*	*N*	*N*	*N*	*N*	*N*
Size, width×length of tank, ft.	6×23 1/3	6×25	6×25	6×25	6×26	6×26 2/3	6×26 2/3	6×30	6×30	8×14	8×20	8×20	8×20
Slope, in. per ft.	2 3/4	2 1/2	3	3 1/4	2 3/4	3	2 3/4	2 3/4	2 3/4	3 1/2	2 1/2	2 1/4	3
Speed, s.p.m.	18	20	23	20	28	31	20	18.5	10	26	22	24	16
OPERATING DATA													
Feed: Character *c*	Qtz	Sul	Sul	Sil	Qtz	Sil	Sil	Sil	Sul	Por	Sul	Sul	Sul
Specific gravity of solids	.....	4.8	3.0	2.6	2.6	2.8	.....	2.9	3.5 to 4.5	.....	3.9	3.9	4.3
Solids, %	.....	70	76	.....	.....	50	.....	48	55	44	69	65	70
Tons new per 24 hr.	440	450	260	320	410	340	400	460	240	1,500	304	450	1,845
Tons total per 24 hr.	990	1,361	1,060	1,310	1,410	1,515	950	920	390	2,726	2,034	2,385	1,825
Circulating load, %	125	200	308	307	245	350	137	100	63	82	570	430	*e*
Limiting mesh	.....	28	4	1/2	3/8	4	.....	6	48	8	14 to 20	14	.....
Overflow: % solids	23	58	45	40	25 to 30	36 to 38	24	33	8 to 10	34	40	40	36
Mesh of separation	100	65	48	35 *g*	28	35	65 *e*	48	150	20	48	48	100
Oversize of separating mesh, %	6	1.4	1.6	.....	1.7	1.9	.....	2.2	.....	1.6	2.3	2.9	.....
Sand: Tons per 24 hr.	550	911	800	990	1,000	1,175	550	460	150	1,226	1,730	1,935	740
Solids, %	74	84	80	.....	.....	79	74	80	88	72	85	86	84
Power consumed, hp.	5	2.7	.....	6	5	.....	.....	3.5	2.7	4	5	5	3
Sizing tests *b*	*11*	*12*	*13*	*14*	*15*	*16*	*17*	*18*	.....	*19*	*20*	*21*	.....
PERFORMANCES													
Overflow, tons per ft. per 24 hr.	73	75	43	53	68	56	67	76	40	187	38	55	135
Sand: tons per ft. per 24 hr.	91	150	133	165	167	196	92	76	25	153	220	240	93
% finer than separating mesh	66	88.6	43.4	43	41.6	46.3	82	44.3	.....	59.6	80.8	79.6	.....
% <200-m.	21	29.8	11.1	6.6	3.3	4.6	8	9.3	.....	6.2	19.7	19	.....
Separating efficiency *h*	.....	32.1	43.4	.....	45.8	36.1	.....	63.1	.....	63.4	10.5	.....	.....

Table 6. Performance of rake classifiers—*Continued*

Mill	Idaho-Maryland	Tennessee Copper	Mt. Lyell	Nevada Cons. (McGill)	Britannia	Mata-hambre	Potosi, Mex.	Nevada Cons. (McGill)	B. H. & S.	American Zinc, Mascot	Consol. M. & S.	Andes Copper	Mt. Lyell
MACHINE CHARACTERISTICS													
Number of rakes	2	2	2	2	2	2	2	2	2	2	2	4	4
Duty *a*	*N*	*N*	*N*	*N*	*H*	*H*	*H*	*H*	*H*	*H*	*H*	*N*	*H*
Size, width × length of tank, ft.	8×21 2/3	8×25	8×26 3/4	12×21 2/3	5×24	5×25 1/2	6×27	7×25 1/2	7×28 1/3	8×25 1/2	8×25 1/2	11×20	12×26 2/3
Slope, in. per ft.	3 1/4	2 1/2	2 7/8	3	3	2 1/2	2 5/8	2 1/2	2 1/2	2 1/2	2 3/4	3	3 7/16
Speed, s.p.m.	28	24	25	19	30	27	25	18	27	21	30	27	22.6
OPERATING DATA													
Feed: Character *c*	Qtz	Sul	Sil	Por	Sil	Por	Sul	Por	Sid	Lime	Sul	Por	Sil
Specific gravity of solids	2.6	3.5	2.9	2.7	2.7 to 2.8	2.7 to 2.8	4	.....	3.2	2.8	4.3	2.7	2.9
Solids, %	56	50	76	48	.....	78	65	.....	77	70	73	37	79
Tons new per 24 hr.	300	600	1,900	1,560	350 to 400	250	725	1,300	535	1,200	1,302	850	1,450
Tons total per 24 hr.	400	2,100	3,100	3,640	2,350 to 3,400	1,150	2,175	2,974	2,568	3,800	8,137	2,000	4,750
Circulating load, %	33	250	62	135	570 to 750	360	200	130	380	220	525	135	225
Limiting mesh	3	10	8	10	10	1/2	10	.....	4	6 to 8	3/8	6	3
Overflow: % solids	40	31	60	31	25 to 30	40 to 44	50	48	60	52	43	19 to 26	56
Mesh of separation	65	65	28	28	20	35	35	10	28	20	35	48	8
Oversize of separating mesh, %	4.8	2.2	1.6	1.2	.....	5.8	3.8	.....	6.0	0.6	3.7	0.5	1.9
Sand: Tons per 24 hr.	100	1,500	1,200	2,080	2,000 to 3,000	900	1,450	1,674	2,033	2,600	6,835	1,150	3,300
Solids, %	76	80	82	76	75	79	85	80	81	85	85	75	85
Power consumed, hp.	.....	8	5	11	8	.....	8	10	.....	10	10	.....	15
Sizing Tests *b*	*22*	*23*	*24*	*25*	.....	*26*	*27*	.....	*28*	*29*	*30*	*31*	*32*
PERFORMANCES													
Overflow, tons per ft. per 24 hr.	37	75	237	130	70 to 80	50	121	186	76	150	162	77	91
Sand: tons per ft. per 24 hr.	12.5	188	150	173	570 to 750	180	242	240	290	325	854	105	210
% finer than separating mesh	19.3	68	84.0	66.3	.....	33.8	83.3	.....	56.5	76.4	36.9	36.6	61.6
% <200-m.	7.0	10.6	10	11.0	5	6.8	13.3	.....	8	15 *f*	4.9	25.6	9.3
Separating efficiency *h*	77.0	44.7	53.5	.....	.....	.....	34.0	.....	21.4	.....	49.6	66.6	56.6

a *L* = light; *N* = normal; *H* = heavy.
b Italic numeral refers to lines of Table 6a.
c Sil = siliceous; Cal = calcitic; Por = porphyry; Sul = sulphide.
d 3-deck.
e Open-circuit desliming.
f <100-m.
g Estimated.
h Sec. 19, Eq. 163.

Table 6a. Sizing tests for Table 6, cumulative weight retained, %

Screen, mesh		3	4	6	8	10	14	20	28	35	48	65	100	150	200	<200
No.	Material *a*															
1	*F*	.....	.....	.....	.....	.....	.....	.....	.....	.....	.....	52	62	70	83	17
	S	.....	.....	.....	.....	.....	.....	.....	.....	.....	.....	81	87	91	96	4
	O	.....	.....	.....	.....	.....	.....	.....	.....	.....	.....	33	45	55	75	25
2	*F*	.....	.....	.....	.....	.....	.....	0	.....	.....	.....	.....	62	.....	75	25
	S	.....	.....	.....	.....	.....	.....	.....	.....	.....	.....	.....	82	.....	94	6
	O	.....	.....	.....	.....	.....	.....	.....	.....	.....	.....	.....	31	.....	53	47
3	*F*	.....	.....	0.2	2.4	15.6	31.4	47.1	58.1	68.2	75.6	83.0	87.2	89.9	91.3	8.7
	S	.....	.....	0.1	5.6	21.9	37.9	55.3	67.1	77.6	84.3	89.9	94.5	97.4	99.1	0.9
	O	.....	.....	.....	.....	.....	.....	.....	.....	.....	.....	.....	.....	1.8	12.1	87.9
4	*F*	.....	.....	.....	.....	.....	.....	0.2	0.8	4.4	12.5	30.3	55.2	64.9	74.5	25.5
	S	.....	.....	.....	.....	.....	.....	0.5	1.7	7.2	19.2	43.4	70.2	80.1	88.1	10.9
	O	.....	.....	.....	.....	.....	.....	.....	.....	.....	0.2	2.2	11.2	21.9	35.9	64.1
5	*F*	2.7	15.7	29.7	40.9	50.7	58.9	64.9	69.6	73.7	77.0	80.5	83.6	85.8	87.7	12.3
	S	2.1	16.6	33.9	47.7	61.1	69.8	76.5	81.2	85.3	88.1	89.8	91.6	92.7	93.6	6.4
	O	.....	.....	.....	.....	.....	.....	.....	1.4	4.1	8.9	14.7	23.7	31.6	39.2	60.8
6	*F*	.....	.....	.....	0.1	0.6	3.5	9.4	17.8	29.0	40.6	49.3	59.3	66.1	71.3	28.7
	S	.....	.....	.....	0.8	3.2	11.1	27.1	43.9	59.8	71.1	77.3	83.3	86.9	89.3	10.7
	O	.....	.....	.....	.....	.....	.....	.....	4.7	13.1	24.7	34.9	46.7	54.9	62.0	38.0
7	*F*	.....	.....	.....	.....	.....	.....	.....	.....	.....	.....	33	45	55	75	25
	S	.....	.....	.....	.....	.....	.....	.....	.....	.....	.....	49	81	92	96	4
	O	.....	.....	.....	.....	.....	.....	.....	.....	.....	.....	4	12	32	43	57
8	*F*	.....	.....	1.3	.....	3.6	.....	8.2	.....	21.0	.....	47.5	65.2	74.5	80.1	19.9
	S	.....	.....	0.6	.....	1.9	.....	6.4	.....	22.7	.....	57.2	76.8	86.3	91.1	8.9
	O	.....	.....	.....	.....	.....	.....	.....	.....	.....	.....	0.6	6.5	16.7	27.9	72.1
9	*F*	.....	.....	.....	.....	.....	.....	13.1	.....	27.4	.....	47.1	66.9	79.2	86.3	13.7
	S	.....	.....	.....	.....	.....	.....	16.5	.....	35.7	.....	57.7	78.5	91.4	96.6	3.4
	O	.....	.....	.....	.....	.....	.....	.....	.....	.....	.....	.....	0.3	8.1	20.2	79.8
10	*F*	.....	.....	.....	.....	.....	.....	.....	.....	.....	0.1	0.6	3.2	8.8	15.2	84.8
	S	.....	.....	.....	.....	.....	.....	.....	.....	.....	1.6	5.4	16.0	33.0	50.0	50.0
	O	.....	.....	.....	.....	.....	.....	.....	.....	.....	.....	0.2	1.8	5.4	10.8	89.2

Table 6a. Sizing tests for Table 6, cumulative weight retained, %—*Continued*

Screen, mesh.....		3	4	6	8	10	14	20	28	35	48	65	100	150	200	<200
No.	Material *a*															
11	*S*	.....	.....	.....	.....	.....	.....	.....	.....	.....	2	.....	34	60	79	21
	O	.....	.....	.....	.....	.....	.....	.....	.....	.....	.....	.....	6	18	35	65
12	*F*	.....	.....	.....	.....	.....	.....	.....	0.6	1.6	3.0	7.8	23.4	39.4	53.0	47.0
	S	.....	.....	.....	.....	.....	.....	.....	0.8	1.8	4.4	11.4	33.2	54.4	70.2	29.8
	O	.....	.....	.....	.....	.....	.....	.....	.....	.....	0.4	1.4	4.2	9.4	15.6	84.4
13	*F*	.....	.....	1.2	.....	3.6	6.1	9.9	.....	.....	42.4	53.1	65.3	72.4	79.1	20.9
	S	.....	.....	1.5	.....	4.4	7.5	12.7	.....	.....	56.6	66.5	78.4	84.3	88.9	11.1
	O	.....	.....	.....	.....	.....	.....	.....	.....	.....	1.6	7.3	19.4	30.6	45.5	54.5
14	*F*	.....	15.3	.....	22.7	.....	28.2	30.7	34.9	41.0	50.8	61.4	71.0	.....	80.5	19.5
	S	.....	22.8	.....	32.1	.....	39.3	43.0	48.7	56.8	69.9	80.4	88.6	.....	93.4	6.6
	O	.....	.....	.....	.....	.....	.....	.....	.....	.....	.....	.....	22.3	.....	43.7	56.3
15	*F*	1.1	3.2	5.7	8.5	12.3	18.4	28.6	42.9	58.1	68.1	75.7	81.1	85.0	87.8	12.2
	S	1.7	4.2	7.5	11.8	16.9	25.4	39.3	58.4	76.3	86.1	91.2	94.1	95.7	96.7	3.3
	O	.....	.....	.....	.....	.....	.....	0.1	1.7	8.3	20.1	34.0	46.6	56.1	64.1	35.9
16	*F*	.....	.....	1.6	4.0	7.5	12.2	18.7	27.2	42.4	57.4	67.4	74.8	80.1	83.1	16.9
	S	.....	.....	0.9	2.3	5.0	9.0	17.0	29.0	53.7	75.0	85.1	90.7	93.8	95.4	4.6
	O	.....	.....	.....	.....	.....	.....	0.1	0.2	1.9	13.5	32.4	49.7	61.5	68.4	31.6
17	*S*	.....	.....	.....	.....	.....	.....	.....	.....	.....	18	.....	66	83	92	8
	O	.....	.....	.....	.....	.....	.....	.....	.....	.....	.....	.....	14	32	49	51
18	*F*	.....	.....	0.6	1.7	2.8	4.5	6.2	10.1	18.0	30.2	41.3	54.3	60.4	66.6	33.4
	S	.....	.....	1.4	3.0	5.1	7.8	11.4	19.6	34.4	55.7	73.1	83.6	88.0	90.7	9.3
	O	.....	.....	.....	.....	.....	.....	.....	.....	.....	2.2	9.1	23.0	34.5	43.1	56.9
19	*F*	.....	.....	.....	.....	1.1	8.4	18.4	29.2	39.2	48.0	56.0	63.5	68.8	73.0	27.0
	S	.....	.....	.....	.....	2.1	18.7	40.4	59.1	72.3	80.5	86.1	90.1	92.5	93.8	6.2
	O	.....	.....	.....	.....	.....	0.2	1.6	5.1	13.2	22.2	31.6	41.7	48.2	56.0	44.0
20	*F*	.....	.....	.....	.....	.....	.....	.....	.....	.....	17.5	30.5	44.7	63.0	75.2	24.8
	S	.....	.....	.....	.....	.....	.....	.....	.....	.....	19.2	32.7	48.0	67.8	80.3	19.7
	O	.....	.....	.....	.....	.....	.....	.....	.....	.....	2.3	7.5	16.5	28.3	45.8	54.2
21	*F*	.....	.....	.....	.....	.....	.....	.....	.....	.....	21.8	33.2	45.8	58.2	68.6	31.7
	S	.....	.....	.....	.....	.....	.....	.....	.....	.....	20.4	33.6	48.4	69.0	81.0	19.0
	O	.....	.....	.....	.....	.....	.....	.....	.....	.....	2.9	7.8	14.9	28.7	41.5	58.5

22	*F*	0.5	.....	.....	.....	4.4	.....	8.9	.....	22.4	31.2	43.0	52.7	60.3	65.6	34.4
	S	1.1	.....	.....	.....	9.7	.....	18.8	.....	46.8	66.7	80.7	88.2	91.4	93.0	7.0
	O	.....	.....	.....	.....	.....	.....	.....	.....	.....	.....	4.8	19.6	30.8	42.8	57.2
23	*F*	.....	.....	.....	.....	.....	.....	.....	.....	.....	.....	20.0	38.8	.....	78.0	22.0
	S	.....	.....	.....	.....	.....	.....	.....	.....	.....	.....	32.0	52.0	.....	89.4	10.6
	O	.....	.....	.....	.....	.....	.....	.....	.....	.....	.....	2.2	9.0	.....	38.4	61.6
24	*F*	.....	.....	.....	.....	0.2	0.9	.....	6.3	13.1	24.3	41.4	57.2	70.2	79.0	21.0
	S	.....	.....	.....	.....	1.1	3.6	.....	16.0	25.5	37.1	55.3	69.9	83.6	90.0	10.0
	O	.....	.....	.....	.....	.....	.....	.....	1.6	7.1	17.7	35.3	52.2	66.6	74.5	25.5
25	*S*	.....	.....	.....	.....	0.9	4.0	8.6	23.7	42.7	60.5	74.0	82.1	86.7	89.0	11.0
	O	.....	.....	.....	.....	.....	.....	0.2	1.2	3.8	11.3	22.8	34.5	44.1	54.5	45.5
26	*F*	9.9	.....	.....	.....	.....	.....	.....	.....	85.0	87.0	88.7	90.1	91.4	92.5	7.5
	S	.....	.....	.....	.....	.....	.....	.....	.....	66.2	78.0	84.8	89.0	91.6	93.2	6.8
	O	.....	.....	.....	.....	.....	.....	.....	.....	5.8	12.0	21.0	31.4	42.2	51.0	49.0
27	*F*	.....	.....	.....	.....	.....	.....	.....	.....	10.6	24.2	40.7	54.8	65.6	73.0	27.0
	S	.....	.....	.....	.....	.....	.....	.....	.....	16.7	36.4	56.7	71.1	81.0	86.7	13.3
	O	.....	.....	.....	.....	.....	.....	.....	.....	3.8	9.6	21.5	35.8	47.7	57.2	42.8
28	*F*	.....	.....	2.5	.....	.....	16.0	.....	37.5	.....	62.5	70.0	77.0	83.5	86.0	14.0
	S	.....	.....	4.5	.....	.....	20.5	.....	43.5	.....	69.5	78.0	84.0	88.5	92.0	8.0
	O	.....	.....	.....	.....	.....	.....	.....	6.0	.....	22.0	29.0	39.5	49.5	57.5	42.5
29	*F*	.....	.....	.....	.....	.....	.....	17.6	.....	43.8	.....	59.8	75.2	.....	.....	25.8 *b*
	S	.....	.....	.....	.....	.....	.....	23.6	.....	55.6	.....	72.2	85.0	.....	.....	15.0 *b*
	O	.....	.....	.....	.....	.....	.....	0.6	.....	12.8	.....	33.0	52.5	.....	.....	47.5 *b*
30	*F*	.....	.....	.....	.....	.....	.....	.....	31.0	45.9	59.5	71.0	79.9	.....	87.6	12.4
	S	.....	.....	.....	.....	.....	.....	.....	45.5	63.1	76.2	84.8	91.8	.....	95.1	4.9
	O	.....	.....	.....	.....	.....	.....	.....	.....	3.7	8.2	17.9	33.3	.....	55.1	44.9
31	*F*	.....	.....	.....	4.4	.....	8.1	.....	14.7	.....	36.3	49.3	63.4	.....	74.4	25.6
	S	.....	.....	.....	7.7	.....	14.3	.....	25.8	.....	63.4	81.1	92.2	.....	96.0	4.0
	O	.....	.....	.....	.....	.....	.....	.....	0.1	.....	0.5	6.5	24.5	.....	44.8	55.2
32	*F*	0.1	5.9	.....	21.1	31.8	41.4	.....	57.5	64.0	68.6	73.1	76.1	78.7	80.6	19.4
	S	0.2	8.5	.....	39.6	54.0	66.3	.....	74.3	80.0	83.8	86.8	88.5	89.8	90.7	9.3
	O	.....	.....	.....	1.9	4.2	7.7	.....	19.5	27.9	34.2	42.2	48.1	54.0	58.1	42.2

a *F* = feed, *S* = sand, *O* = overflow.

b <100-m.

3. SPIRAL CLASSIFIER

Description. The Akins classifier (Fig. 4) comprises an inclined tank *a*, of the same general nature as that of the rake type (Art. 2), and one or two spirals *b* mounted on a through shaft *c* substantially parallel to the tank bottom. The spiral structure effects the necessary agitation in the pool and conveys settled sand up the bottom to the sand-discharge lip *d*. Feed is introduced substantially at pool level, through one or both side walls (*e.g.*, at *h*) at a distance from the overflow weir *e* equal to about one-half pool length. Pool level is maintained as desired by adjusting the height of *e*. Overflow drops into box *f* and is piped away through *g*.

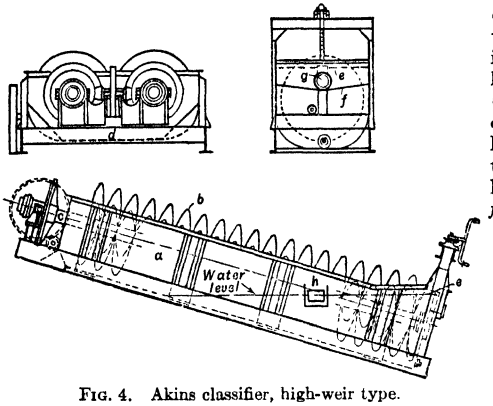

FIG. 4. Akins classifier, high-weir type.

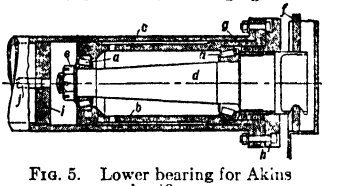

FIG. 5. Lower bearing for Akins classifier.

Tank bottom is rounded as shown. Tank is usually made of steel, but it may be of wood, concrete, or special corrosion-resistant material. The bottom is protected from wear by a sand layer below the reach of the spiral.

Spiral consists of sections of heavy steel ribbon of proper form and width, fastened to the outer ends of arms clamped to the large hollow shaft *c*. The ribbon forms a double-pitch screw. White-iron replaceable shoes protect the ribbon.

Bearings. The upper bearing is swiveled and the bevel drive gear is so arranged as to permit lifting the lower end of the spiral without interference with the drive. All thrust of the spiral is taken against the upper bearing. The LOWER BEARING (Fig. 5) consists of two roller bearings *a* mounted in a carrier *b* bolted inside the lower end of the hollow shaft *c*. A forged-alloy spindle *d*, the outer end of which is squared, is collared in place in the bearing by nut *e* and supported at the outer end in a slot in the hanger *f*. Entry of grit is prevented by packing *g*, held in place by packing flange *h*. The space enclosing the bearing is sealed off from the rest of the shaft by disk *i*, which is pressed in. Grease lubrication is provided for by the pipe *j*, serviced from the drive end.

Adjustment of spiral height. Hanger *f* (Fig. 5) runs in suitable guides and is suspended by rod or chain from a jack screw or worm windlass respectively, either of which may be manually or motor driven. Hydraulic or pneumatic lifts are also available.

Drive. Speed of the spiral shaft is low (3 to 6 r.p.m.) and the drive, therefore, involves considerable gear reduction. Flat-belt, V-belt, chain, and direct drive from a back-geared motor are available.

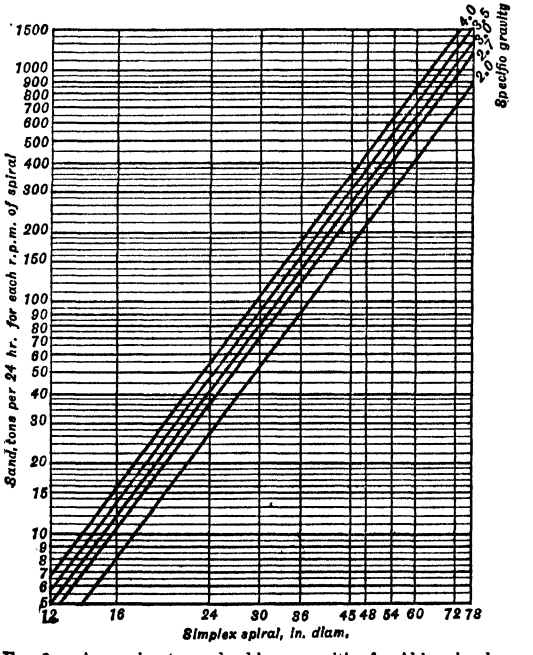

FIG. 6. Approximate sand-raking capacities for Akins simplex classifiers. (Double for duplex.)

Types. The machine is made in three forms, distinguished by the position of the spiral in the tank. The usual form is the HIGH-WEIR TYPE (Fig. 4), suitable for ordinary

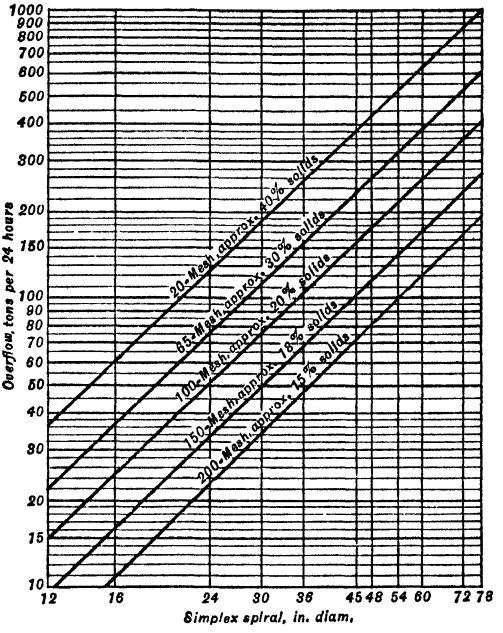

Curves hold for average grinding practice, with classifier sloped about 3 1/2 i.p.f. and solids of 2.7 sp. gr. For other sp. gr. apply factor from Fig. 8.

FIG. 7. Approximate overflow capacities of Akins simplex classifiers, high-weir type. (Double for duplex.)

grinding circuits with separation at 100-m. or coarser and ores that are not extraordinarily slow settling. The SUBMERGED-SPIRAL TYPE has the overflow weir high enough to submerge the lower end of the spiral completely. The area and volume of the pool (and hence the capacity for fine separations) are thus increased; further increase may be effected by widening the tank in the pool portion. In the LOW-WEIR TYPE the lower-end bearing is above pulp level, giving a very small pool area; this apparatus is useful principally for dewatering of granular materials and for rough sand-slime separations.

Size rating is based on the outside diameter of the spiral in inches. Usual sizes are listed as the abscissae of Figs. 6, 7, and 9. The high-weir type is made also in 96- and 108-in. sizes.

Speeds. Recommended maxima are 6 r.p.m. for the 78-in. machines and 20 r.p.m. for the 12-in.

Manufacturer's (Colorado Iron Wks. Co.) **data** for estimation of capacities are given in Figs. 6 to 9.

Performance data are given in Table 7.

Manufacturers. Colorado Iron Wks. Co., Denver Equipment Co.

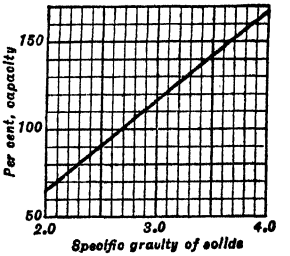

FIG. 8. Factors for use with Figs. 7 and 9.

4. DRAG CLASSIFIER

Esperanza classifier (Fig. 10) is typical of the drag-flight machines. It consists of an endless rubber belt or link chain *a* which carries a plurality of flights *f* and runs on pulleys or sprockets *b* and *c* in an inclined tank *d*. Feed enters the tank at the lower end, fine solids overflow lips or weirs, usually at the side, and sands, after settling, are dragged up the inclined bottom by the flights to the sand-discharge lip at the upper end. In other

Table 7. Performance of Akins classifiers

Mill	Candelaria	Falconbridge Nickel	Potash Co. of America	Nev. Cons., Chino	Midvale	Midvale	Preston East Dome	Anaconda	Calumet & Hecla
MACHINE CHARACTERISTICS									
Type *g*	HW	HW	HW	HW	HW	HW	HW	HW	HW
Spirals: Number	1	2	1	2	1	1	1	1	1
Diam., in.	36	48	54	54	54	60	60	66	66
R.p.m.	6	4.8	3	2.7	5	3	4	4	4
Tank, bottom slope, in. per ft.	3 1/2	3 1/4	2 5/8	3 3/4	3	3	3 1/2	3 1/2	4
OPERATING DATA									
Feed: Character *a*	Qts.	Sil.	*c*	*d*	Sul.	Sul.	Qtz.	Sil.	Amyg.
Sp. gr. of solids	2.6	3.0	1.65	4.5	3.5–3.8	3.5–3.8	2.7	3.2	2.8
Solids, %	78	66	60	80	50	50	73	68	.....
Tons new per 24 hr.	60	520	288	250	250	300	1,120	557	510
Tons total per 24 hr.	180	2,120	1,440	750	850	1,300	2,585	4,557	.....
Circulating load, %	200	310	400	200	240	330	130	720	.....
Limiting mesh	8	4	.....	65	20	20	3/8	1/2	.....
Overflow: % solids	28	41–49	25	12	40	40	59	28	40
Mesh of separation	48	48	20	.....	48	48	20	48	20
Oversize in overflow, %	.....	3.7	.....	.....	.....	.....	2.5	.....	.....
Sand: Tons per 24 hr.	120	1,600	1,152	500	600	1,000	1,465	4,000	.....
Solids, %	82	81	65	80	85	85	81	82	85
Power consumed, hp.	3	.....	5.8	5	5	5	4.5	4.5	7.5
Sizing tests *b*	*1*	*9*	.....	.....	.....	.....	*8*	*3j*	*4*
PERFORMANCES									
Overflow, tons per ft. of width per 24 hr.	20	65	64	28	56	60	224	101	91
Sand: Tons per ft. of width per 24 hr.	41	200	256	55	133	200	293	730	.....
% finer than separating mesh	.....	35.8	.....	.....	.....	.....	72.8	52.8	.....
% <200-m.	.....	10.4	.....	.....	12	12	6.4	6.1	.....
Efficiency *f*	.....	46.6	.....	.....	.....	.....	40.2	.....	.....

Mill	Alder-mac	Combined Metals Red'n	Cons. M. & S.	New Cornelia	Climax Molyb-denum	Aunor	Sunshine	Sunshine
MACHINE CHARACTERISTICS								
Type *g*	HW	HW	HW	HW	HW	SS	SS	SS
Spirals: Number	1	1	1	1	2	2	2	2
Diam., in.	72	72	72	78	78	36	36	48
R.p.m.	3	2.7	2.5	3.5	3.5	5.9	5	10
Tank, bottom slope, in. per ft.	4	3 1/4	2 7/8	4	3 1/2	4	3 1/2	3 1/2
OPERATING DATA								
Feed: Character *a*	Sul.	Sul.	Sul.	Por.	Sil.	Sil.	Sil.	Sil.
Sp. gr. of solids	3.9	.....	4.8	2.7	2.7	2.8	3.1	3.1
Solids, %	65	.....	69	.....	75	.....	78	80
Tons new per 24 hr.	450	350	710	625	1,500	470	375	475
Tons total per 24 hr.	2,142	1,250	2,085	3,745	10,500	1,760	1,415	3,175
Circulating load, %	375	260	195	480	600	275	280	570
Limiting mesh	20	.....	28	3	3/8	3	10	3
Overflow: % solids	40	40	42	15	40–50	37	35	40
Mesh of separation	48	100	65	48	28	48	48	48
Oversize in overflow, %	4.7	.....	0.8	1.3	2.9	2.2	.....	.....
Sand: Tons per 24 hr.	1,692	900	1,375	3,120	9,000	1,290	1,040	2,700
Solids, %	84	82	83	80	85	83	.....	.....
Power consumed, hp.	7.5	3	2.2	6	18	2.5	4	12.5
Sizing tests *b*	*5*	.....	*6*	*7*	*8*	*10*	*11*	*12*
PERFORMANCES								
Overflow, tons per ft. of width per 24 hr.	75	58	118	96	115	78	62	60
Sand: Tons per ft. of width per 24 hr.	282	150	229	500	690	215	175	340
% finer than separating mesh	80	.....	92.2	40.5	28.7	39.4	.....	37
% <200-m.	21.9	.....	38.2	4.8	6.8	7.2	9.4	10.1
Efficiency *f*	2.5	.....	20.3	29.7	49.2	43.0	31.3 *e*	25.3 *e*

a Qts. = quartz and some sulphides; Sil. = siliceous, with some sulphides; Amyg. = amygdaloid· Sul. = high-sulphide rock; Por. = porphyry.
b Numbers refer to lines in Table 7*a*.
c Salts and clay.
d Flotation concentrate.
e Based on 100 *mog*.
f See Sec. 19, Eq. 163.
g HW = high-weir; SS = submerged-spiral.

Table 7a. Sizing tests for Table 7, weight retained, % cumulative

Screen, mesh		3	4	6	8	10	14	20	28	35	48	65	100	150	200	<200
No. a	Material b															
1	F	.....	.....	.....	.....	.....	16	.....	.....	50	.....	74	.....	.....	86	14
	O	.....	.....	.....	.....	.....	.....	.....	.....	.....	.....	6.8	.....	.....	29.6	70.4
2	F	1.5	3.9	6.2	8.2	10.2	13.5	17.6	23.8	33.1	45.6	60.8	72.1	81.4	86.9	13.1
	S	0.9	2.6	4.9	8.0	12.3	19.5	27.2	36.4	47.0	60.0	74.0	83.5	90.5	93.6	6.4
	O	.....	.....	.....	.....	0.2	0.8	2.5	6.5	14.8	28.1	47.6	61.3	72.7	78.3	21.7
3	F	.....	2.2	.....	.....	5.0	.....	.....	.....	.....	.....	54.0	.....	.....	.....	46.0 c
	S	.....	4.2	.....	.....	8.8	.....	.....	.....	.....	47.3	64.0	81.0	90.2	93.9	6.1
	O	.....	.....	.....	.....	.....	.....	.....	.....	.....	1.7	10.6	23.0	35.8	47.4	52.6
4	O	.....	.....	.....	.....	.....	.....	.....	6.1	.....	28.5	.....	55.6	64.6	74.3	25.7
5	F	.....	.....	.....	.....	.....	.....	.....	.....	.....	19.6	29.3	40.9	56.8	70.6	29.4
	S	.....	.....	.....	.....	.....	.....	.....	.....	.....	20.0	30.7	44.0	64.0	78.1	21.9
	O	.....	.....	.....	.....	.....	.....	.....	.....	.....	4.9	10.6	17.7	30.3	42.5	57.5
6	F	.....	.....	.....	.....	.....	.....	.....	0.2	0.6	1.6	5.2	17.2	32.2	45.2	54.8
	S	.....	.....	.....	.....	.....	.....	.....	0.6	1.2	3.0	7.8	24.8	44.6	61.8	38.2
	O	.....	.....	.....	.....	.....	.....	.....	.....	.....	0.1	0.8	3.2	8.2	13.4	86.6
7	F	0.8	2.0	3.6	4.6	7.6	10.4	14.2	21.8	33.8	50.8	67.4	77.4	82.8	85.6	14.4
	S	0.4	1.2	2.2	3.0	5.0	7.8	12.2	21.6	37.0	59.5	79.5	88.9	92.9	94.5	5.5
	O	.....	.....	.....	.....	.....	.....	.....	.....	.....	1.3	8.3	23.0	35.7	47.4	52.6
8	F	3.5	7.7	.....	.....	22.5	.....	36.9	45.9	55.7	63.3	70.0	74.7	.....	83.1	16.9
	S	13.1	19.7	.....	.....	43.5	.....	59.7	71.3	79.3	84.0	87.5	89.8	.....	93.2	6.8
	O	.....	.....	.....	.....	.....	.....	0.6	2.9	8.9	18.1	27.6	39.0	.....	57.5	42.5
9	F	.....	.....	0.8	.....	3.5	6.3	10.8	.....	.....	48.5	57.1	67.4	73.4	79.7	20.3
	S	.....	.....	0.9	.....	4.5	8.5	15.2	.....	.....	64.2	72.1	81.2	85.8	89.6	10.4
	O	.....	.....	.....	.....	.....	.....	.....	.....	.....	3.7	10.8	22.1	32.2	45.7	54.3
10	F	.....	4.0	6.4	8.6	10.8	13.8	18.8	25.8	35.6	47.4	59.4	69.6	75.0	77.6	22.4
	S	.....	8.4	11.4	13.8	15.8	18.8	23.6	31.2	43.8	60.6	77.0	87.6	91.4	92.8	7.2
	O	.....	.....	.....	.....	.....	.....	.....	.....	0.4	2.2	8.0	20.2	30.6	36.2	63.8
11	F	.....	.....	.....	.....	.....	.....	.....	.....	16.0	.....	44.9	61.0	.....	76.3	23.7
	S	.....	.....	.....	.....	.....	.....	.....	.....	21.7	.....	58.9	77.4	.....	90.6	9.4
	O	.....	.....	.....	.....	.....	.....	.....	.....	.....	.....	6.0	15.5	.....	36.5	63.5
12	F	.....	8.0	.....	.....	12.5	.....	20.3	.....	36.5	.....	62.7	71.8	.....	81.9	18.1
	S	.....	9.4	.....	.....	14.7	.....	23.9	.....	43.0	.....	72.6	81.6	.....	89.9	10.1
	O	.....	.....	.....	.....	.....	.....	.....	.....	.....	.....	6.0	15.8	.....	36.4	63.6

a Reference number from Table 7. b F = feed, S = sand, O = overflow. c <last screen.

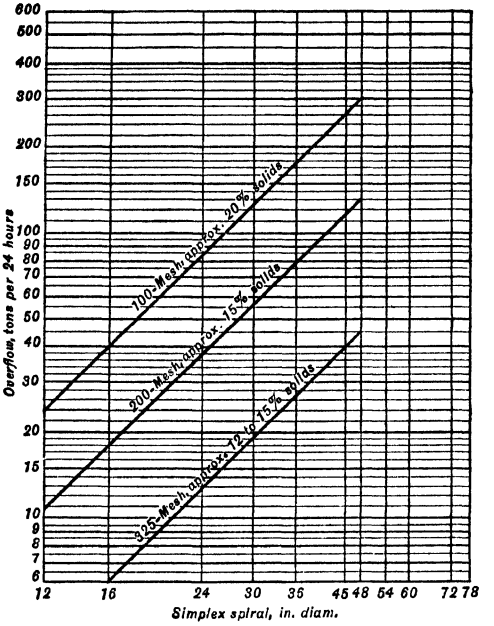

Curves hold for average grinding practice, with classifier sloped about 3 1/2 i.p.f. and solids of 2.7 sp. gr. For other sp. gr. apply factor from Fig. 8.

FIG. 9. Approximate overflow capacities of Akins simplex classifiers, submerged-spiral type. (Double for duplex.)

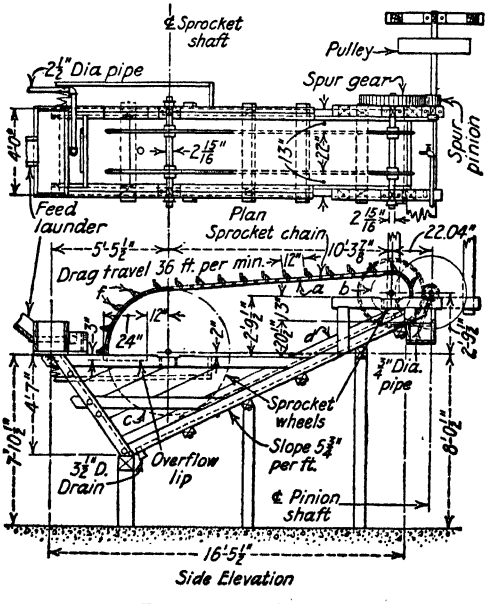

FIG. 10. Drag classifier.

forms, for finer separations, the tank is made wider, with inwardly sloping sides, in the pool area.

Construction, as indicated by Fig. 10, is well within the capacity of any millwright, and the cost is low. A small self-contained unit with steel tank and a welded angle-iron frame is built for dewatering feed to cleaner jigs on dredges; bottom slope is 45°.

Performances are given in Table 8.

Use. On account of the cheapness of construction, many drag classifiers were used in the mills in the early 1920's, when the competing machines were small and relatively inefficient both mechanically and as separators. At present (1943) use is generally restricted to small mills or to crude separations that do not justify the expense of the manufactured machines.

Drag belt. In a modification of the drag classifier, the sand settles on the drag belt and is carried by it above the pulp surface; slime overflows in the usual fashion. The disturbance is less than in the ordinary type and finer sand is, therefore, collected. At INSPIRATION two 18-in. belts were set side by side in one tank; the distance center to center of head pulleys was 39 ft.; the vertical distance from the overflow lip to the lower run of the belt was 5 ft. The machines were used to separate sand, for tabling, from flotation tailing.

5. HARDINGE COUNTERCURRENT CLASSIFIER

Description. The Hardinge classifier (Fig. 11) consists of an inclined rotating cylindrical drum *a* with a continuous ribbon spiral *b* attached to the interior of the shell, rotation being in such direction with respect to the spiral that material in the spiral trough is impelled toward the higher end. The lower end of the drum is closed by a plate *c* with a central circular overflow opening. The higher end of the shell proper may be completely open, or may carry the sand elevator *d*. The pitch of the spiral decreases gradually from the low to the high end, while the inwardly projecting ribbon decreases gradually in height in the opposite direction. Feed is introduced via an externally supported internally projecting launder *e*, which may enter either end, but preferably the overflow end. The plunge of the feed stream and the movement of the spirals agitates the pulp in the pool sufficiently to maintain a classifying pool through which sand settles and is moved up-slope by the

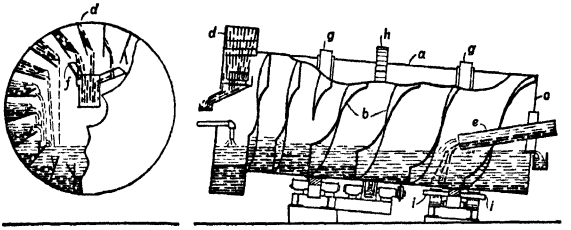

FIG. 11. Hardinge countercurrent classifier.

push of the ribbon. The deeper ribbons near the upper end maintain supplemental pools above the level of the main pool; wash water, introduced at the sand end, flows into and through these pools with sufficient velocity to lift out slimes freed by the working of the sands. The gradual decrease in pitch of the spiral causes increase in depth of the sand bed toward the sand discharge, which has some tendency, in combination with the turnover due to rotation, to work slimes and fine sands to the surface of the bed, where they are exposed to the flow of wash water in the supplemental pools. Introduction of wash water into the sand elevator *d*, as indicated, has some further desliming effect by draining from the flights above water level, and by the agitation caused by the falling drainings. The sand elevator dries the sand more or less, the extent being somewhat controllable by varying the position of sand-receiving shelf *f*.

Shell *a* is built of welded plate, and carries two tires *g* and a girth gear *h*. The tires are supported on rollers, and thrust rollers *i* maintain the tires in position on the slope. Usual DRIVE is by a sprocket on the pinion shaft. The interior of the shell has light LINERS to which the sections of the spiral ribbon are bolted.

Slope ranges from 1/2 to 1 1/2 in. per ft.

Manufacturer's data for estimating capacities are given in Table 9.
Performance data are given in Table 10.

Table 8. Performance of drag classifiers

Plant	Braden			Braden			Braden			Braden			Federal M. & S. Co.			Bunker Hill and Sullivan Mg. Co.		Shattuck-Arizona		Britannia			St. Joseph Lead Co. *IC 8658*		
Size	*a*			*a*			*c*			*d*			36-in.			4′–10″×22′ –6″ tank *l*		*m*		5 2/3×12			4×17		
Slope of bottom, in. per ft.													6			4		2		*n*			8 1/2		
Rake spacing, in.	18			18			18			18			12					12					12		
Belt speed, f.p.m.	40			40			24–40			28			36			17		58		*o*			44.8		
Power installed, hp.										10			3							2 *p*					
Tons of solid feed per 24 hr.	833			1,030			721			983			150			350		250		350–400 *q*			1,474		
Product	*F*	*S*	*O*	*F*	*S*	*O*	*F*	*S*	*O*	*F*	*S*	*O*	*F*	*S*	*O*	*S*	*O*	*S*	*O*	*F*	*S*	*O*	*F*	*S s*	*O*
Moisture, %	50	20	70	40	18	72	55	20	74	71	62	76	49	31	82	20	96.4	36	76	70	80	25–30 *r*	45	16	67
Sizing test, cumulative %																									
3-m.	2	3	.....	10	12	.....	.....	.....	.....	.....	.....	.....	.....	.....	.....	.....	.....	.....	.....	.....	.....	.....	.....	.....	.....
4	4	6	.....	15	18	.....	1	1	.....	.....	1	.....	.....	.....	.....	.....	.....	.....	.....	.....	.....	.....	.....	.....	.....
6	7	10	.....	21	25	.....	2	2	.....	.....	2	.....	.....	.....	.....	.....	.....	9.8	.....	.....	.....	.....	0.4	0.7	.....
8	11	16	.....	28	33	1	3	4	.....	.....	4	.....	.....	.....	.....	.....	.....	14.8	.....	.....	.....	.....	6.9	10.1	.....
10	20	29	.....	37	44	2	5	7	.....	.....	10	.....	.....	.....	.....	.....	.....	20.1	.....	.....	.....	.....	16.3	24.5	.....
14	28	41	.....	45	54	4	8	12	.....	.....	18	.....	.....	.....	.....	.....	.....	24.4	.....	.....	.....	.....	23.4	35.5	.....
20	38	56	.....	55	66	7	14	21	.....	2	29	.....	0.4 *e*	0.4 *e*	.....	.....	.....	29.6	.....	.....	.....	.....	27.7	42.1	.....
28	48	71	.....	66	79	11	25	37	1	4	46	.....	.....	.....	.....	7.6	.....	35.6	.....	.....	.....	.....	33.7	51.0	.....
35	56	81	2	74	87	16	39	58	3	8	63	1	6.8 *f*	9.6 *f*	.....	15.9	.....	44.2	.....	.....	.....	.....	40.9	59.7	0.1
48	63	88	8	79	92	25	53	76	9	16	76	4	.....	.....	.....	28.7	.....	54.9	.....	.....	.....	.....	48.9	70.7	0.6
65	67	91	14	83	95	32	62	86	16	26	84	8	26.0 *g*	41.6 *g*	1.4 *g*	41.8	.....	67.9	3.2	60–65	70–75	22–24	61.7	84.7	8.0
100	33 *b*	9 *b*	86 *b*	17 *b*	5 *b*	68 *b*	70	92	27	74 *b*	16 *b*	92 *b*	34.6 *h*	54.8 *h*	1.8 *h*	60.3	.....	79.7	9.8	.....	.....	.....	66.3	88.0	16.2
150	.....	.....	.....	.....	.....	.....	74	94	35	.....	.....	.....	44.8 *i*	68.4 *i*	5.2 *i*	70.8	.....	86.2	15.0	.....	.....	.....	70.8	90.3	25.5
200	.....	.....	.....	.....	.....	.....	76	95	40	.....	.....	.....	54.8 *j*	85.6 *j*	12.6 *j*	87.5	5.6	92.8	29.6	.....	.....	.....	75.2	92.0	35.4
<200	.....	.....	.....	.....	.....	.....	24	5	60	.....	.....	.....	45.2 *k*	14.4 *k*	87.4 *k*	12.5	94.4	7.2	70.4	10–12	4–6	40–45	24.8	8.0	64.6

a 42×82-in. settling area. 24 ft. center to center of sprockets; blades 3 1/4×32×3/4-in.
b <65-m.
c 42×90-in. settling area; 24 ft. center to center of sprockets; blades 3×36×1/2-in.
d 48×150-in. settling area; 36 ft. center to center of sprockets; blades 4×42×1/2-in.
e 20-m.
f 40-m.
g 80-m.
h 100-m.
i 160-m.
j 240-m.
k <240-m.
l Centrally placed pan 26×60-in. for overflow, making total length of overflow lip 172 in. Blades of wood, 4×1×56-in., steel-shod.
m 30-in. overflow, 12-in. belt.
n Horizontal; Munro elevator type.
o 45 to 60 f.p.m. in primary circuit; 30 to 36 f.p.m. in secondary. An operating variable.
p 1.6 to 1.75 hp. consumed.
q Plus 1,500 to 2,000 tons of sand return.
r Depending upon tonnage and character of feed.
s 972 t.p.d.
F = Feed.
S = Sand.
O = Overflow.

Table 9. Manufacturer's data on Hardinge countercurrent classifiers

Size, diam. × length, ft.	Mesh of separation	Sand discharge capacity, tons per 24 hr. *a*	Overflow capacity, tons per 24 hr. *a*	R.p.m.		Hp. motor
				Min.	Max.	
1 1/2×4	28	55	20	2.5	8.0	0.25
	65	50	12	2.0	7.0	0.25
	200	30	5	1.0	3.0	0.25
2 1/4×6	28	250	65	2.0	6.0	0.50
	65	200	40	1.5	5.0	0.25
	200	120	15	1.0	3.0	0.25
3×8	28	400	110	2.0	6.0	0.75
	65	350	65	1.5	5.0	0.50
	200	200	25	1.0	3.0	0.50
4×10	28	900	175	2.0	6.0	2.0
	65	750	110	1.5	5.0	1.0
	200	450	40	0.8	2.5	1.0
5×12	28	1,500	275	1.5	5.0	3.0
	65	1,200	175	1.5	5.0	2.0
	200	600	65	0.5	1.5	1.0
6×14	28	2,500	400	1.5	5.0	5.0
	65	2,000	250	1.0	3.0	3.0
	200	1,000	110	0.3	1.0	2.0
7×16	28	3,700	550	1.5	4.0	7.5
	65	3,000	350	1.0	3.0	7.5
	200	1,500	150	0.3	1.0	3.0
8×20	28	6,000	800	1.5	4.0	15.0
	65	5,000	550	1.0	3.0	10.0
	200	2,500	200	0.3	1.0	5.0
9×24	28	8,500	1,000	1.0	3.0	20.0
	65	7,200	700	0.8	2.5	15.0
	200	3,600	250	0.2	0.7	7.5
10×28	28	12,000	1,250	1.0	3.0	30.0
	65	10,000	850	0.8	2.5	20.0
	200	5,000	350	0.2	0.7	10.0

a Sp. gr., 2.6.

Table 10. Performances of Hardinge countercurrent classifiers *a*

Ore	Lime-stone	Lime-stone	Quartz and schist	Por-phyry	Siliceous gold ore			Sulphide ore
MACHINE CHARACTERISTICS								
Size, diam. × length, ft.	1 1/2×4	3×8	5×12	5×12	6×14	6×14	6×14	8×20
Slope, in. per ft.	1/2	3/4	1	1	1 1/4	1 1/4	3/4	1 1/4
Speed, r.p.m.	2	2.5	2	1.5	2.3	1.7	0.5	1.5
OPERATING DATA								
Feed: Sp. gr. of solids	2.6	2.4	2.7	2.7	2.7	2.7	2.7	4
Solids, %	55	65	70	78	73	66	35	75
Tons new per 24 hr.	1.2	21	400	192	520	210	90	1,400
Tons total per 24 hr.	6	53	715	942	1,745	630	170	3,000
Circulating load, %	420	150	79	390	235	200	89	115
Size, %>mesh	5>48	25>48	61>100	90<10	25>28	38>35	42>200	36>65
Overflow: % solids	11	35	42	30	45	43	14	51
Mesh of separation	325	48	65	100	28	35	200	48
% on separating mesh	5	0	*b*	1.6	4.5	2	3	*f*
Sand: Tons per 24 hr.	5	32	315	750	1,225	420	80	1,600
Solids, %	72	76	76	81	80+	80+	70	85
PERFORMANCES								
Overflow, tons per 24 hr. per ft. of shell diam.	0.8	7 *e*	80	38	87	35 *e*	15	175
Sand: Tons per 24 hr. per ft. of shell diam.	3.3	10.7 *e*	63	150	205	70 *e*	13	200
% finer than separating mesh	4.8	59	*c*	*d*	48	38	15	*g*

a Supplied by Hardinge Co.
b 82% <100-m.
c 14% <100-m.
d 7.3% <200-m.
e Underloaded.
f 92% <65-m.
g 48% <65-m.

6. OPERATION OF MECHANICAL CLASSIFIERS

The essential elements of a mechanical classifier from the standpoint of operation are the settling tank and the agitating and sand-transporting mechanism. These act jointly to produce the separation effected; hence, while the various structural elements and operating changes of each must be considered separately in determining their effects on performance, it should be borne in mind that at all times constancy of all other elements is implied.

Principle of area. The body of pulp in a mechanical classifier is divided into several zones having different particle-size and pulp-density characteristics. The inclined-trough apparatus, shown diagrammatically in Fig. 12, may be taken as typical. Zone *A*, on the bottom, is a layer of inactive stationary sand, the first to settle after the classifier started operation, below the lowest reach of the sand-removing mechanism, and serving simply to protect the bottom of the tank; it takes no part in the classifying action. Zone *B*, comprising the material lying in the space swept by the sand flights in their sand-propulsive movement, is the material that will be delivered as rake product, excluding a small amount of fines that will be disengaged by turnover and by the action of spray water; it likewise is finished so far as classification in the pool is concerned. Zone *C* is a quicksand, *i.e.*, a suspension of sand in water, maintained by agitating, having a buoyant effect analogous to that of a liquid of the same composite density (weight of included sand plus water divided by volume), but subject to rearrangement of particles within itself on the basis of their weight, so that particle size and pulp density increase from top to bottom (Table 11). This zone is of substantially constant volume but of ever renewing solid content in a classifier operating properly under constant feed conditions; new material of the same character as respects particle size and specific gravity replaces the material that settles out of the bottom into zone *B*; momentary increase in depth by piling up at the top tends to decrease the activity of and compact the bottom whereupon the settling rate of the bottom particles into zone *B* is increased and the condition tends to correct itself.

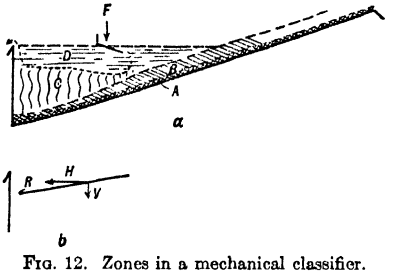

FIG. 12. Zones in a mechanical classifier.

Table 11. Pulp density at different depths in a Dorr classifier *a*

Depth below surface	Sp. gr.	Dilution, %		Screen test (cum.), % weight			
		L : S	Solids	>14	>28	>48	>100
1/4" *b*	1.212	2.45 : 1	29.0	.....	.....	1.8	19.8
3"	1.323	1.44 : 1	41.0	.....	tr.	11.8	.....
6"	1.582	0.64 : 1	61.0	tr.	0.3	40.3	.....
12"	1.835	0.31 : 1	76.3	0.4	7.2	58.7	.....

a 6-ft. duplex normal-duty machine operating with 320 t.p.d. of feed and 1,100 t.p.d. of sand; 21 s.p m.; slope, 2 3/4 in. per ft.

b Overflow about the same density.

Zone *D* comprises essentially a stream of pulp flowing horizontally across the top of zone *C* from feed apron to overflow weir. During this travel the solids settle so that the average path of any given particle, relative to the tank, is diagonally downward, as *R* in Fig. 12, item *b*, the impelling forces being gravity and the horizontal impulsion of the stream. If the velocity components of *R* are taken as *H* and *V* respectively, *b* is the breadth of the tank, *d* the depth of zone *D*, *l* the distance from feed point to overflow, and *Q* the total volume of pulp flowing per unit of time, then $H = Q/bd$.

If a particle reaches the bottom of zone *D*, *i.e.*, gets out of the stream before it reaches a point near the weir where a relatively strong rising current exists, it will not overflow. The limiting condition is when it just fails to enter zone *C*. This condition is expressed as $d/V_c = l/H$, whence $V_c = Hd/l = Q/bl$. But *V* is some direct function of *D*, where *D* is diameter of particle (Fig. 2), and *bl* is the area of pool. Thus it follows that D_c, the largest particle in the overflow, varies inversely as the area of the pool for any given volume of pulp flowing. The effects of changes in structure and operating conditions are all to be examined against the background of this principle of area.

Slope of tank bottom determines pool area, sand-raking capacity, and sand drainage, all other conditions remaining constant. It thereby affects mesh of separation and moisture

content of sand discharge, and it may have serious effects on the stability of classifier operation (see *Surging*). The effect on pool area may be and is compensated by change in height of weir or by baffle placing, so as to maintain area an independent factor in the operation. Drainage effect increases, of course, with increase of slope to produce drier sand.

Maximum slope is determined by the tendency of sand to slip back into the pool. The critical point in slip-back is where the sand load emerges from the pool, since this is the point of maximum disturbance of the load by the water; once the sand gets beyond this point it will discharge except for small amounts of fines carried back by drain or spray water.

Tendency to slip back is dependent upon size, specific gravity, shape, and surface texture of the sand particles and upon the presence of clayey or talcy slimes in the feed material. The question resolves primarily on the angle of repose of the settled material and its tendency to pack. Coarse, jagged, and rough-surfaced particles have a high repose angle and can stand steep slopes; particles of high specific gravity tend to pack and thereby enhance their resistance to swash at the vee of the pool; it is the apparent rather than the real specific gravity that is important. Slimes, particularly those of a slippery nature, act as lubricants and reduce repose angle. Long-range sands require flatter slopes than short-range.

Clean sand. When maximum cleanliness of sand product is desired, a strong spray is directed at the solid load as it emerges at the vee. Since this tends to increase tendency to slip back, but is essential to disengagement of fines, slope must usually be decreased.

Surging is a cyclic variation in tonnage and character of sand and overflow. It occurs when sand-raking capacity is inadequate or pulp in the pool is too dense. Cycles usually range in length from 10 to 20 min. They are characterized by a gradual decrease in tonnage of sand raked and an increase in its size. There is no corresponding change, at the time, in tonnage or character of overflow. Hence a selective building up of intermediate sizes in the pool occurs. The top of zone *C*, Fig. 12, rises. When the top of zone *C* has almost reached the surface of the pool (probably has reached it in effect), and the rake load has virtually disappeared, overflow suddenly becomes much coarser and the classifier unloads over the weir. Thereupon the pool becomes overly dilute, rapid settling occurs, the rakes are again overloaded, and the cycle repeats.

Remedies for surging are (*a*) ample sand-raking capacity and/or (*b*) dilution. Raking capacity may be built into the classifier, or increased, if otherwise inadequate, by increasing speed or the area of submerged parts. When increase in sand capacity is accompanied by increase in agitation, the pulp must be diluted in order to prevent increase in suspension and correspondingly coarser overflow. Steeper slopes may be used on light-duty rake classifiers than on heavy-duty because the light machines operate with shorter strokes, which cause less agitation.

Slopes for rake classifiers fall in the range of 2 to 3 1/2 in. per ft. Spiral classifiers operate with less agitation and without any release of push on the sand load; they may, therefore, operate on steeper slopes, and, since maximum possible elevation of the sand is usually desirable in closed circuits, slopes on normal ores are ordinarily in the range of 3 to 4 in. per ft. Actually the slope is steeper than this because the sand is lifted somewhat up one side of the curved bottom of the tank. Drag classifiers operate on yet steeper tank slopes, up to 6 in. per ft. The corresponding slope of the Hardinge classifier is not that of the axis of the drum, but rather that of the spiral trough as it emerges from the pool; it, therefore, varies throughout the length of the cylinder with the variable pitch of the spiral, and is further dependent upon diameter of drum, height of overflow, height of spiral ribbon, and slope of drum axis. There are not enough data available to state its magnitude; it should be possible to work with higher actual slopes than in the other types because of comparatively smaller disturbance in the vee. On the other hand, elevation of sand at the end of the classifier cylinder is always necessary in a closed circuit because of the flat slope of the cylinder itself.

The Dorr Company recommends that slopes be as flat as possible when sharpness of separation is the primary desideratum.

Height of overflow is an operating variable in some types of mechanical classifiers (Akins, Dorr heavy-duty) and change is not a major structural operation in the others. Adjustability adds greatly to the flexibility of the machine, however, particularly when density of overflow is fixed by and must be maintained to satisfy subsequent treatment requirements. Change varies the area of the pool; increase decreases the intensity of surface agitation in the region of the overflow lip but not at the vee. High weirs are used for fine separation both because the large pool is needed ($D_e \propto 1/a$, p. 22), and because the decreased agitation reduces pulp density at overflow level, where final separation is made. Conversely,

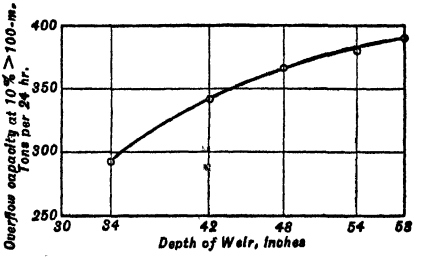

FIG. 12A. Effect of weir height on capacity of Dorr rake classifier.

low weirs are used for coarse separations. Effect of height on character of overflow product is shown in Table 12 and columns 1 *vs.* 3 and 2 *vs.* 4 in Table 13, presenting tests on Dorr classifiers. Height must be less when overflowing solids of high specific gravity than for normal ores. Effect of height on capacity is shown in Fig. 12*A*, which is for a 6×25-ft. normal-duty duplex Dorr classifier working in a closed grinding circuit at TIMBER BUTTE; 23 s.p.m.; 20% solids in overflow.

Table 12. Effect of height of weir on character of overflow product of a 12-ft. Dorr heavy-duty classifier *e*

Screen, mesh	Cumulative percentages					
	Feed *a*		Sand		Overflow *b*	
	Weir height					
	53-in.	45-in.	53-in.	45-in.	53-in. *c*	45-in. *d*
28	28.0	28.9	35.7	32.3	.....	.....
35	41.9	39.3	54.3	50.0	0.4	1.2
45	57.1	55.9	73.1	72.3	4.0	7.8
65	68.4	65.2	84.0	82.4	15.3	16.6
100	76.7	73.5	90.7	89.7	27.8	28.7
150	81.3	78.1	93.5	92.9	37.3	38.5
200	84.2	81.6	94.8	94.3	45.4	46.1
<200	15.8	18.4	5.2	5.7	54.6	53.9

a Ball-mill discharge. Original feed to circuit <3-m. Ore: average siliceous; sp. gr., 2.7; nothing abnormal about grindability or settling characteristics.
b 30% solids.
c 1,596 t.p.d.
d 1,548 t.p.d.
e Slope, 2 1/4 in. per ft.; 24 s.p.m.

Table 13. Tests on simplex Dorr classifier at Anaconda

Test number	1		2		3 *a*			4 *a*			5 *b*			6		
Feed, t.p.d.	475		418		427			402			446			364		
Overflow, t.p.d.	359		296		320			287			225			230		
Sand, t.p.d.	116		122		107			115			221			134		
Speed, s.p.m.	17.5		12.5		17.5			12.5			17.5			19.3		
Percentage of solids in overflow	32.9		29.6		27.6			26.8			25.6			25.2		
Screen test: Cum. per cent	*F*	*O*	*F*	*O*	*F*	*O*	*S*	*F*	*O*	*S*	*F*	*O*	*S*	*F*	*O*	*S*
On 20-m	1.7	0.4	0.8	0.2	2.0	0.9	2.4	1.1	0.4	1.4	1.5	0.5	2.7	1.3	.....	1.8
28	6.3	0.9	4.4	0.7	7.6	1.9	9.5	3.9	1.2	6.1	6.3	1.4	10.3	5.2	0.2	6.3
35	17.8	4.6	15.3	3.3	16.8	5.0	27.3	14.2	3.6	17.5	13.1	3.7	26.5	12.9	1.1	17.2
48	27.0	11.3	24.0	9.0	32.3	11.9	50.6	28.8	9.1	35.6	28.7	8.4	49.3	26.6	4.6	36.9
65	44.3	24.7	41.5	21.5	47.9	23.4	68.9	44.9	19.6	55.3	44.5	19.9	67.8	42.6	13.5	58.2
100	59.8	41.2	57.5	38.3	64.9	42.6	84.9	63.3	38.8	78.1	61.6	38.5	83.5	61.2	32.0	79.2
150	72.5	57.9	70.5	57.1	73.9	56.1	91.4	73.1	53.0	86.3	71.8	53.8	90.3	72.3	50.7	88.5
200	81.8	65.3	80.8	65.4	78.5	63.3	94.1	78.2	60.9	91.1	77.5	62.0	93.8	78.4	60.3	93.1
<200	18.2	34.7	19.2	34.5	21.5	36.7	5.9	21.8	39.1	8.9	22.5	38.0	6.2	21.6	39.7	6.9

a Height of tailboard increased 3 in.
b Rakes notched with staggered cutouts, 3 in. wide and full depth of vertical flange.
F = Feed.
O = Overflow.
S = Sand.

Height for light-duty Dorr classifiers is 21 to 24 in.; for heavy-duty machines these figures may be more than doubled. In the Akins high-weir machines the depth at right angles to the spiral shaft ranges from 1 in. greater than spiral diameter in small machines to 8 in. less in the 78-in., and 18 in. less in the 96-in. machine; in the submerged-spiral type the height is 1 1/2 to 2 times spiral diameter.

Speed is important from the standpoint of agitation of the pulp in the pool. The effective speed is, therefore, a composite of the velocity and area of the propelling surface, its path, the angle at which it strikes the pulp, and, to a degree, of the place, relative particularly to the overflow weir, in which the propulsive force is applied. The internal-spiral (Hardinge) type has the lowest effective velocity from the standpoint of propulsive force and effect, and this lack is compensated by a relative decrease in depth of pool to bring the disturbance nearer to the surface; the energy of the feed stream and that of the wash water are also utilized for agitation by causing them to plunge into the pool. Little agitation

is caused by the spiral ribbon of the Akins machines, but the radiating arms from the hubs to the bands are steel strips twisted so as to present their broad faces at right angles to the direction of movement through the distance from the hub to the inner edge of the spiral: they thus afford the agitation necessary to effect the desired suspension. In the high-weir type this agitation extends to the surface of the pulp along the centerline of the pool almost to the overflow lip; in the submerged-spiral type it is well below the surface in the region of the overflow. Maximum peripheral speed of the agitating arms is of the order of 60 to 120 f.p.m. Average lineal speed of travel in the reciprocating-rake type machine is in the general range of 20 to 60 lineal f.p.m. for the normal-duty machines, about 80% of this for light duty and double it for heavy duty, corresponding to stroke lengths of 10 to 14 in. for the light- and normal-duty types and 18 to 20 in. for the heavy-duty type. Maximum lineal speeds in cycles are probably double the averages. Blade depths are normally 3 1/2 to 4 1/2 in. for light-duty, about 5 in. for normal-duty (4- to 8-in. range), and 8 to 9 in. for heavy-duty machines. Depth of blades may be decreased below the feed point (toward the overflow) in reciprocating-rake machines in order to decrease agitation in this region; such reduction is permissible from the sand-raking standpoint owing to the smaller amounts of sand in this region. Such decrease is standard design in the heavy-duty machine (Fig. 3), the blade height being decreased gradually from 8 or 9 in. to 1 1/2 or 2 in. Lineal speeds for rakes in bowl-rake classifiers (Art. 7) average 65 to 75% of those of the same type without bowls, and the blades are, in general, somewhat smaller in depth. The drag machines have approximately the same range of flight speeds as the averages for the light- and normal-duty rake types, but this speed is uniform and unidirectional.

Agitation is a maximum in the reciprocating-rake machines, judged from the extent of surface movement both at the vee and at the overflow weir; it is least at the overflow weir in the submerged-spiral type, in bowls operating with low rotary-rake speeds, and in the desliming drags. Relatively strong agitation at the vee is desirable when clean sand is the desideratum, because the last effective cleaning takes place here. Addition of dilution water at this point increases the cleaning. Agitation through the mass of suspended sand in the pool (zone *C*, Fig. 12) is probably most thorough in the submerged-spiral machine; this is helpful with slimy ores that have a tendency to flocculate. In all types agitation is decreased, usually by joint decrease in speed and height of blade as pool area is increased to effect fine separation. Increase in height of overflow has an independent effect on agitation at the overflow, however, because of the corresponding increase in distance from the surface of the pulp to the center of disturbance, and the relative increase in volume of pulp throughout which the energy of the agitator is absorbed. Conversely, the effect of an increase in agitation is the same as a decrease in area of pool. Effect of changing the speed of an 8-ft. FX classifier closing circuit on a 7×10-ft. ball mill crushing porphyry ore is shown in Table 14.

Table 14. Effect of rake speed on products of a rake classifier *a*

New feed, tons per 24 hr.	Ball-mill discharge, % >65-m.	Solids in overflow, %	Speed, s.p.m.	Circulating-load ratio	Overflow, % >65-m.	Sands	
						% >65-m.	% <200-m.
590	67.4	13.3	17.2	4.7	4.63	79.8	2.9
675	60.4	13.7	9.1	4.5	0.75	76.6	5.3

a All factors constant except as noted in table. Weir height, 45 in.

Sand-raking capacity varies as the forward speed of the blade and as the square of its height. Maximum capacity does not, however, equal or, in most cases, even closely approach the capacities estimated from simple geometrical considerations. The discrepancy is due to fluidity of the sand, particularly while submerged, to slip-back along the face of spirals, and to slump as support is taken away when reciprocating rakes are lifted. Raking efficiency is increased to some extent by placing the propelling surfaces closer together than simple analysis would indicate; thus the Akins machines use a double-pitch spiral and the Dorr apparatus spaces reciprocating blades at a distance equal to about one-half the stroke length. Actual capacities for sands of usual grinding-circuit sizes for average ores may be estimated from the tables of manufacturer's data and checked by the performance tables in this section; the effects of changes in pitch of spirals or in height and spacing of blades and flights is a matter, almost, of pure conjecture, lacking direct experimental data.

At Compania Minera de Peñoles (*153 A 623*) a rake classifier with insufficient sand-raking capacity was fitted with about 16 @ 1-in. pipes projecting upward through the tank bottom to a level just below the lower edge of the rake blades, spaced so that each drew from substantially equal areas under the entire area of the pond. Screen tests of pipe sands and rake sands were substantially identical. The amount drawn through the pipes was 7 to 8 times the amount raked; solid content was about 80%.

Baffles (item *z*, Fig. 3) are used on rake classifiers when otherwise mixing of the feed with the pool contents is inadequate, and the incoming stream segregates, with the result

that the liquid runs across the pool and overflows without its proper load of solid. This condition occurs most frequently in coarse separations (>20-m.) or with quick-settling ores (*e.g.*, the magnetite-pyrite-chalcopyrite ore at PENNSYLVANIA STEEL Co., Lebanon, Pa.).

The baffle has several effects: it decreases pool area and thus decreases settling rate; it produces rising currents of relatively high velocity and correspondingly increased carrying capacity directly at the overflow; and it directs a flushing current down into the top of zone *C* (Fig. 12) which tends to carry the material thus flushed out on up the restricted channel between the baffle and the tailboard. It thus tends to prevent building up of sand in the pool, and to clean up the rake product; but it also increases the amount of tramp oversize in the overflow.

Baffle is standard equipment on Dorr rake classifiers for normal and heavy duties. It is spaced as much as 24 in. from the weir for fine separations, and as close as 1 1/2 in. for very coarse overflows (*e.g.*, 14-m. at GRAND COULEE DAM). The deeper it extends, the coarser the overflow. It should be adjusted as to submergence and horizontal spacing until the nearest possible approach to the desired separation is achieved.

Width of tank determines directly the sand-raking capacity, all other things being constant. Taken with slope and height of overflow, it determines pool area and, consequently, capacity for a given mesh of separation or, conversely, the mesh of separation for a given feed volume. Hence width is determined by the tonnage of either sand or overflow product, whichever is the greater. In this connection, it must be borne in mind that increase in speed increases both sand-raking and overflow capacity, and that, with a given tonnage of feed, the increase in overflow decreases the tonnage of sand to be raked. Similar increase in overflow capacity may be obtained by increase in pulp density.

Increase in width of tank is usually accompanied by multiplication of sand-propelling units. Such multiplication is normally the result of structural demands, since the weight and cost of large propulsive units usually increase more rapidly than their capacity. But at the same time multiplication yields considerable advantage in respect to the character of the agitation, particularly in the reciprocating-rake machines, since it opposes the impulses and breaks the currents up into small eddies, as opposed to the swashing wave caused by a single rake in the tank.

Widths required for given tonnages of overflow at particular dilutions are given in Table 5 and Figs. 7 and 9 for Dorr and Akins classifiers respectively; no such data are available for other types. Below 10 to 15% solids the question is simply a matter of calculation of pool area from free-settling velocities, except that for very fine separations (*e.g.*, 325-m.) the velocity of cross flow from feed point to weir must be considered, and pool area be made sufficient to permit sand to settle to the rake zone before the accelerated rising current near the weir is reached. At higher densities, settling velocities are affected by the specific gravity of the pulp; data for their estimation are not available. In general, however, the decrease in settling velocity and consequent gain in capacity per unit of area (and width) are greater proportionately than the change in density, as may be seen by inspection of Eqs. 7 and 9, bearing in mind that η increases as ρ increases.

Length of tank is determined in part by the requirements for washing, dewatering, and drainage, but primarily by transport demands. In general, 5 to 8 ft. of drainage deck beyond the point of emergence from the pool is allowed; further length on the same slope is substantially ineffective. Additional drainage can, however, be obtained by a 20- to 30-in. extension of lip on a slope about 5% greater than that of the bottom, with no additional propulsive elements. Sand piles up here and is compacted as the last rake (or spiral), made deeper, pushes it out to the distant lip. Moisture content is 2 to 4% lower with such an arrangement. (See also Sec. 15, Art. 2.)

Further increase in raked length is usually provided in order to elevate sand sufficiently to permit gravity return to a grinding mill. The lengths of the majority of classifiers in grinding circuits are determined by the lengths of the mills on which they close the circuit (Sec. 5, Art. 12).

Feeding. The stream of feed to a classifier has a large amount of kinetic energy and if allowed to plunge directly into the pool it causes considerable agitation, so directed and localized as to carry down into zone *C* (Fig. 12) material which would otherwise not penetrate this zone, but would stream across the top to the overflow. The result is that zone *C* becomes congested (see *Slope*). Furthermore penetration of zone *C* by the plunging stream stirs sand into the cross stream and increases the amount of tramp oversize. The best method of feeding is to slow the stream down by flowing it over and spreading it on an apron, partially submerged in the pool, and sloped toward the sand-discharge end, so that most of the kinetic energy is absorbed in the part of the pool farthest removed from the overflow. The desirability of this procedure is greater the finer the mesh of separation and the more stringent the requirements as to tramp oversize and cleanliness of rake product. The normal feed point is about one-half of the distance from overflow weir to the vee of the

pool, but with average ores the nearer the point of actual release of sand from the feed tray is to the vee, the better the mixing of sand and water and the less the likelihood of

Table 15. Effect of dilution on products of a rake classifier handling heavy ore [a]

New feed, tons per 24 hr.	Mill discharge, % >65-m.	Circulating-load ratio	Speed, s.p.m.	Dilution, % solids in overflow	Products		
					Overflow % >65-m	Sand	
						% >65-m.	% <200-m.
Test No. 1							
807	53.5	4.0	20.5	37.4	10.0	64.5	9.4
894	50.8	4.6	20.5	30.9	5.7 [b]	60.6	8.0
Test No. 2							
1,020	58.3	4.1	25.5	43.7	14.2	69.1	10.4
1,035	62.7	4.2	25.5	47.5	20.0	73.0	10.2

[a] Tests on a 12-ft. FX Dorr classifier closing circuit on a 6 1/2×15-ft. rod mill grinding high-sulphide ore. Weir depth, 43 in. All operating factors constant except as noted in the table.

[b] This number would have been smaller had tonnage not risen at the same time that pulp density was lowered.

congestion in the classifier. However, if a coarse separation is required, and the feed is slime-free or of high specific gravity, it may be advantageous to feed much nearer the overflow than normal, and even turn the feed tray toward the overflow weir. An even better plan under such circumstances is to design initially for limited area.

Table 15a. Effect of dilution on products of a rake classifier handling light ore [a]

Solids, %	Overflow			Sands		
	>65	>100	<100	>65	>100	<100
	Cumulative percentages					
19	0.5	6.7	93.3	62.5	89.0	11.0
22	3.1	11.0	89.0	60.5	87.1	12.9

[a] Quartzitic gold ore containing about 6% sulphides. New-feed rate, 225 t.p.d.; <10-m. Normal-duty 6-ft. duplex Dorr classifier; 3 1/4 in. per ft., 23 s.p.m., 40-in. height of weir.

Dilution. The density of the overflow pulp is the most important factor in determining mesh of separation in a classifier that is not overloaded on the fine end. Increased dilution (*i.e.*, decreased sp. gr. of overflow) makes for finer separation with normal ores, and *vice versa*, if the pulp contains more than about 10% solids (see Tables 15 and 15*a*); if the pulp is more dilute and not too clayey, increase in dilution at constant solid tonnage increases rising velocity and makes for coarser separation.

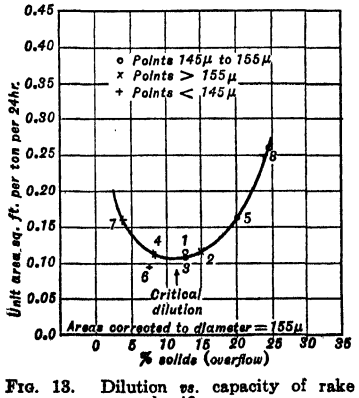

FIG. 13. Dilution *vs.* capacity of rake classifier.

The pulp density at which the change in effects comes is called the CRITICAL DILUTION. Critical dilutions for average ores for different meshes of separation are given in the last column of Table 5. Overflow capacity is a maximum at critical dilution; decrease in dilution slows down the rate at which sand drops out, thereby increasing the time that must be allowed for the surface stream to drop out the small sand particles; increased dilution beyond the critical lowers the concentration of solid per unit volume of cross stream without change in rate of settlement of sand. The effect at UTAH COPPER CO. is shown in Fig. 13.

The effect of change in dilution on mesh of separation is much greater for coarse separations than for fine, *i.e.*, at high pulp densities than at low. This fact is reflected in the density tolerances in Table 5. If, by reason of flotation requirements, for example, a classifier is run at a density above critical, the effect is as though the area of the classifier were increased; speed must then be decreased, and as a result fines are less effectively winnowed out in zone *C* (Fig. 12) and more pass into the rake product. Mesh of separation in classifiers operating above critical density is much more sensitive to fluctuations in feed rate than in those at and below, but rate of change of capacity is less on the dense side (Fig. 13).

Water to control dilution is added in the feed launder, in the tank, or onto the sand at or near the vee; in the launder it aids transport and distribution, but increases the stirring effect of the feed; when introduced into the tank it should be sprayed onto the pool surface in order to utilize surface tension to decrease the kinetic effect; at the vee it helps to release slime at the point where the sand is most mobile and responsive to spray washing.

Character of ore. An average ore, from the standpoint of mechanical classification, is one that consists of a relatively unaltered silicate gangue, not more than 5 to 10% of sulphide minerals by weight, a small amount, usually about 2 or 3% or less, of secondary silicates and earthy oxides (primary slimes), and a small amount of soluble salts, mostly sulphates of the heavy metals present. Such an ore, when ground to 20-m. or finer in new mill waters from lake, stream, or well, at the *p*H which falls with such an ore (usually in the range 5.5 to 7.5), is lightly flocculated. Material in zone *C* (Fig. 12) in a classifier treating such an ore is smooth-feeling, has some body but not too much, and is internally mobile under the normal action of the classifier; the solids in zone *D* are not visibly flocculent, but there is normally a very thin layer of clear water on top of the pool; the sands are not harsh to the touch. Addition of normally small amounts of lime or soda ash to the grinding circuit, raising the *p*H to 7 or 8, makes little visible difference in the behavior of the ore in the classifier. The classifier operator says that such an ore contains just the desirable amount of slime for buoyance and lubrication, and not enough sulphide for troublesome quick-settling segregation. When, whether by reason of absence of primary slime in the ore, or because of thorough preliminary desliming, this small amount of slime is absent, it is necessary to run with a smaller pool, higher pulp density, and higher speed; material in zone *C* becomes harsh-feeling and alternates from undue looseness to heavy matting, and the operation becomes sensitive and hard to control. Surging will occur, if sand-raking capacity is not well in excess of normal demands.

If an ore contains large amounts of primary slime, and particularly if this is accompanied by other large amounts of soluble salts produced by oxidation of sulphides, so that *p*H is correspondingly low and lime must be added to the grinding circuit to reduce steel consumption, the slime flocculates badly, the pulp must be kept dilute, and a large pool area must be provided to handle the large volume of water and to permit of slow and careful differentiation between the quick-settling flocs and the only slightly more rapid settling unfinished sand.

Dispersion, when it can be effected, is the best remedy for the difficulties of over-slimy pulps. Sands fall out of well-dispersed dilute pulps almost as rapidly as they do from slime-free pulps. Felting (Sec. 11, Art. 25) is never as bad in dense dispersed pulps as in the same pulps flocculated, and the tendency to felt can be controlled by varying dilution. The result is that the dispersed pulp can be separated to a given mesh in a smaller classifier than would otherwise be necessary and is easy to control.

Effect of excess lime in a slimy feed at CANANEA is shown in Table 16. See also Sec. 5, Art. 12.

Table 16. Effect of lime on performance of a rake classifier at Cananea

Test	1	2	3	4	5	6
Lime, lb. per ton of solution	0.3	0.4	0.77	1.11	1.54	1.80
Feed, % solids	42.5	42.2	42.2	42.2	42.3	42.2
Overflow, % >65-m	1.64	2.69	3.95	6.62	7.46	14.3

Capacity of a mechanical classifier is limited ultimately by the ability of the sand-transporting mechanism to remove settled material. Pool area must be sufficient to settle out the particles that it is desired to remove at the sand ends. If a reasonable efficiency is demanded, say 40 to 50% with normal ores, pool area is generally the determiner of capacity when the feed contains, say, 65 to 70% of undersize (see ***Principle of area; Dilution***). As percentage of undersize decreases, sand-transport becomes more and more the controlling factor (see ***Width of tank***).

Efficiency. (For method of estimation see Sec. 19, Art. 24.) Efficiencies for rake and spiral classifiers range, in general, from 30 to 60%. Average for 21 rake machines reported was 50% against 35% for 9 spiral machines. Examination of the various elements of the efficiency calculation for the cause of the difference shows that the feeds to the spiral machines averaged 68% of finished material against 64% in the rake feed, which is probably not a significant difference; that the difference in content of finished material in overflow and sand ($c - t$; Eq. 163, Sec. 19) was 48% in the rake machine *vs.* 40% in the spiral; and that the difference between the content of finished material in feed and sand ($f - t$) was 14% in the rake *vs.* 9.7% in the spiral. While the arithmetic form of the efficiency equation is such that efficiency appears to be penalized for increase in $c - t$, this is not the case if there is corresponding increase in $f - t$, *i.e.*, it is the ratio $(f - t)/(c - t)$ that is controlling.

The values of this ratio are 0.29 and 0.24 for the rake and spiral respectively. It should follow, of course, that since the rake makes the comparatively cleaner sand and removes more of the finished material from the feed on a single pass, on the average, the circulating loads in spiral-classifier circuits should average higher than in rake circuits. The averages from Tables 6 and 7 are 250% circulating load for the rake and 350% for the spiral. For the effect of this difference on the grinding circuit see Sec. 5, Art. 12.

The low numerical efficiencies of the mechanical classifiers are not to be taken too seriously. The performances analyzed herein were all for ores in which the valuable minerals are heavier than the gangue. Hence a part of the fine material retained in the sands was heavy mineral which hung back and built up in the sand circuit (Sec. 5, Art. 12). This property of such circuits can be and is turned to advantage in most mills. Minerals that break flat tend to produce tramp oversize and lower efficiency.

Comparison of the efficiencies given in Table 6 (average 50%) with those in Table 40 in *Ed. 1* (average 55% for 20 machines) indicates that such advance as there has been in the rake classifiers in 20 years has not been in efficiency. The present machines are bigger, more rugged, and better mechanically than the old, and the apparent decrease in efficiency is due to heavier loading. In 1923 average tonnage overflowed per 24 hr. per ft. of classifier width was 54 for 23 machines reported against 92 in 1943; corresponding figures for sand raked are 126 and 182. These latter figures reflect the somewhat higher average circulating loads in modern grinding practice; overflows are now crowded as compared with 1923 to save on capital costs.

Power consumption of rake and spiral classifiers is so small in comparison to capacity as to be negligible from the standpoint of operating cost in most cases. Dorr Co. recommends 0.5 to 1 hp. per ft. of width for rake classifiers plus 50% additional to cover starting loads; power for bowl ranges from 1/4 hp. for 4- and 6-ft. diameters to 2 to 5 hp. for 25 and 28-ft. diameters. Colorado Iron Wks. recommends motors on the basis of 2 1/4 hp. per 1,000 daily tons of sand raked in small machines to 1 1/2 hp. for large. Power required per ton for duplex machines is slightly less than that for simplex.

Attendance for classifiers in grinding circuits is a part of the duties of the grinding-mill operator (see Sec. 5).

Maintenance of mechanical classifiers is low. Costs reported from 7 large plants range from 0.1 to 0.4¢ per ton, average 0.3¢. At Cariboo Gold Quartz Mine (*PC*) maintenance cost for a normal-duty Dorr machine in secondary service (20-m. feed), 6-yr. average, was 0.0047¢ per ton (3,140,000 tons raked).

7. BOWL CLASSIFIERS

Bowl classifiers consist essentially of a shallow cylindrical tank in which more or less agitation is maintained by means of rotary rakes or plows; these serve also to move settled sand to a discharge cone or well at the center of the tank bottom. Some means of secondary classification is provided to act on the sand seeking egress through the bottom well; this may be simply rising water (hydro types), or rising water supplemented by mechanical agitation (bowl-rake type); the effect of the latter may be further aided by air-lift circulation.

Hydro-bowl classifiers

These classifiers may be used for separations at as coarse as 35-m., but in general they are used to overflow at 100-m. or finer, making either sand-slime separations or separating slimy water in large quantities from associated granular material.

Hydro classifier (Hardinge Co.), shown in Fig. 14, consists of a shallow tank *a* with obtusely conical bottom (slope about 1 1/2 in. per ft.) and a rim or weir *b*, adjustable in height; spiral rakes *c* carried on center column *d*, which is suspended from an enclosed-gear drive mechanism *e* mounted on a framework *f* which is carried on the bowl; a conical collecting and reclassifying chamber *g* containing tangentially directed water inlets *h* and a conical scraper *i* depending from the center-post; and a sand-discharge outlet *j*, which may be either a valved spigot or, as pictured, unvalved, delivering by simple sedimentation into the cylinder *k*, in which water stands at the level of the bowl overflow, and through which a spiral screw transports settled sand to a discharge lip *l*. Item *B* shows a form of reclassifier in which tube *j* is extended downward, with hydraulic water introduced through pipes *m* near the bottom, so that a teeter column (Art. 12) is formed at and above the junction of *j* and *g*. Item *B* shows an alternative method of sand discharge through a plug valve *n;* this is used when considerable water is permissible in the sands.

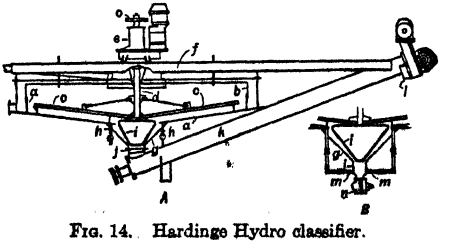

FIG. 14. Hardinge Hydro classifier.

The overflow weir is adjustable vertically through a range of 100% of minimum, which places time-factor under operating control and permits adjustment of mesh of separation

without resort to hydraulic water. This leaves the operator free to use the latter as an additional control on cleanliness of sand. Drive head is fitted with both an automatic lift for relief of overload (Sec. 15, Art. 5) and a manual lift *o* for relief at starting and for setting of rake height. Speed of plows is 1 to 4 r.p.m.

Performance data are given in Table 17.

Table 17. Performances of Hardinge Hydro classifier

MACHINE CHARACTERISTICS					
Diameter, ft. *a*	6	8	12	13	30
Speed, r.p.m.	1	.....	0.75	1	2.8
OPERATING DATA					
Feed: Character	Carbon	Gold ore	Porcelain base *b*	Sand	Coal *d*
Tons solid per 24 hr.	.....	400	60	130	1,400
Solids, %	.....	32	10	3	6.2
Size *c*	57.5% <200-m.	5.5% >48-m. 49.5% <200-m.	.....	*1*	*2*
Water, g.p.m.	.....	.....	.....	560	3,500
Overflow: Tons solid per 24 hr.	0.9	216	20	87	210
Solids, %	1.6	26	4	2	1
Size *c*	78% <325-m.	18% >100-m. 72% <200-m.	All <325-m. 86% <10 μ	*1*	*2*
Underflow: Tons solid per 24 hr.	.....	184	40	43	1,190
Solids, %	.....	62	.....	35	20
Size	13% >48-m. 46% <200-m.	18% >48-m. 8.8% <200-m.	.....	*1*	*2*
Water content, g.p.m.	.....	.....	.....	13	200
Power, motor hp	5	3	1	1	5
PERFORMANCES					
Overflow, tons per sq. ft. per 24 hr.	0.05	4.3	0.18	0.65	0.30
Efficiency	.....	58.0	.....	63.8	38.0

a Slope of bottom, 1 1/2 in. per ft.
b Sp. gr. solids, 3.5.
c Italic numerals refer to Table 14*a*.
d KING mine, Utah.

Table 17*a*. Screen tests for Table 17

Ref. No.	1			2		
Product *a*	*F*	*S*	*O*	*F*	*S*	*O*
Mesh						
6	.....	.....	.....	8.8	10.4	.....
8	.....	.....	.....	19.1	22.9	.....
10	.....	.....	.....	30.6	36.6	.....
14	.....	.....	.....	39.1	46.7	.....
20	.....	.....	.....	46.2	55.1	.....
28	.....	.....	.....	52.5	62.8	.....
35	.....	.....	.....	57.7	68.8	1.1
48	.....	.....	.....	60.8	72.4	2.6
65	1.8	7.3	.....	64.6	76.0	7.7
100	5.0	18.8	1.2	72.0	82.1	21.6
150	.....	.....	.....	82.0	88.2	52.1
200	25.4	61.8	8.5	90.9	93.6	77.9
325	40.9	88.3	19.7	.....	.....	.....
< last	59.1	11.7	80.3	9.1	6.4	22.1

a *F* = feed, *S* = underflow, *O* = overflow.

Hydroseparator (Dorr. Co.) is essentially a shallow Dorr thickener (Sec. 15, Art. 5) of relatively small diameter, fed at such a rate that solid is forced to overflow. Depth is made sufficient to insure against tramp oversize in the overflow, but this acts to throw much material finer than nominal separating size into the underflow.

Performance. At KIRKLAND LAKE a 16-ft. Hydroseparator was operated in closed circuit with a ball mill grinding siliceous gold ore. Overflow at 8% solids was 250 tons of solid per day. Screen analyses were:

Mesh	200	325	<325
Feed, cumulative %	32.6	40.8	59.2
Underflow, cumulative %	47.5	70.3	29.7
Overflow, cumulative %	1.0	6.0	94.0

Underflow was too wet (58.4% solids) for best grinding efficiency.
The following analyses are for a 50-ft. Hydroseparator making a 100-m. separation on an average ore.

Mesh	35	48	65	100	150	200	<200	% solids
Feed, cumulative %	0.1	1.6	6.5	14.2	21.9	28.0	72.0	6.2
Underflow, cumulative %	0.3	3.6	16.2	37.0	54.9	67.0	33.0	19.2
Overflow, cumulative %	....	....	....	0.2	1.2	3.5	96.5	4.4

See also Sec. 3A, Art. 7.

Density of underflow. Maximum attainable is about 65% solids.

Auto-vortex bowl (Fig. 15) is used, in general, for dewatering and at the same time desliming sands at 48- to 100-m. sizes. It comprises a flat-bottomed bowl *a* superimposed on a Nordberg-Wood type sand cone *b* (Art. 9). Junction between the fixed bowl and the vertically oscillating cone is made by a rubber diaphragm *c*.

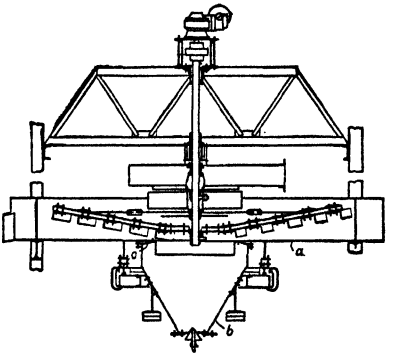

FIG. 15. Auto-vortex bowl classifier.

Noranda aerator classifier. See Sec. 12, Fig. 3.

Design of hydro-bowls. Overflow is normally of sufficiently low pulp density so that the area of the bowl in which current is rising can be designed on the basis of the volume of water to be overflowed, and the free-settling velocity of the largest particle of heavy mineral to be taken over. Depth of bowl over rakes depends upon rake speed and the mesh of separation; for coarse separations the bowl is shallow and rake speed is relatively high in order to get aid from agitation in carrying over the coarser overflow particles; for fine separations the bowl is made relatively deep and rake speed is kept to the minimum that will remove settled sands; in such operation the use of hydraulic water is essential, if a clean separation is desired, since much slime is included in the settled material. As a result, density of underflow is relatively low.

Bowl-rake classifier

Description. The bowl-rake classifier (Fig. 16) consists of a typical rake classifier upon the overflow end of which is superimposed a hydro-bowl *a*, normally about 6 to 8 in. deep at the periphery, with bottom coned on a slope of about 2 in. per ft., the bowl connecting by the central circular well with the pool in the rake compartment at a level below that of the surface of this pool. The rotating rake mechanism *c*, driven independently of the reciprocating rakes, operates in the bowl. In one make ring *d* with air lift *e* comprises a circulating mechanism for return to the bowl of sand that does not settle freely in the rake compartment (CRITICAL-SIZE CONTROL).

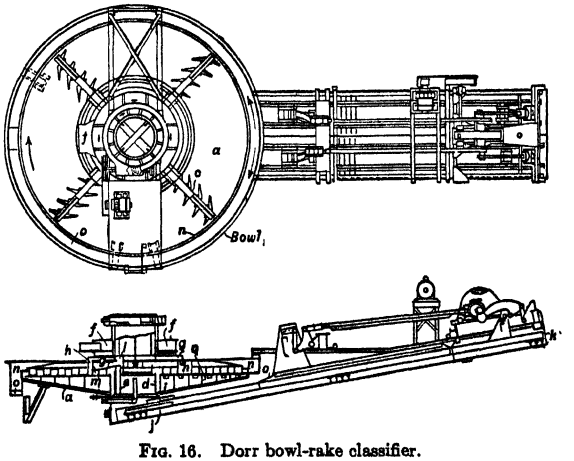

FIG. 16. Dorr bowl-rake classifier.

Feed is introduced into annular box *f*, distributes therein, and flows thence over apron *g* through annular feed ports *h* into the bowl. Sand settles and is raked to the central well, where it falls through annular opening *i*. That part of the settled sand heavy enough to settle to the rakes *j* is raked to the sand-discharge lip *k*; the sand that

Table 18. Performance of bowl-rake classifier

Mill	Copper Range	Idaho-Maryland	Homestake	Tennessee Copper	Mammoth	Copper Range	New Cornelia
MACHINE CHARACTERISTICS							
Number of rakes	1	2	2	2	2	2	2
Duty *a*	*N*	*L*	*N*	*N*	*N*	*N*	*N*
Size of rake tank, width × length, ft.	3×26 2/3	4 1/2×28	6×26 2/3	6×28	6×28	6×30	6×30
Bowl, diam., ft	6	11	12	8	15	12	13
Slope, in. per ft	2	1 1/2	2	2	2	2	2
Speeds: Reciprocating rakes, s.p.m.	26	15	13	21	18	24	22
Bowl rakes, r.p.m.	.....	.....	1 1/8	6	3	.....	*b*
OPERATING DATA							
Feed: Character *b*	Amyg	Sil	Sil	Sul	Sil	Amyg	FlC
Specific gravity of solids	2.8	3.0	.....	4.4	.....	2.8	4.0
Solids, %	72	.....	18	.....	35	56	.....
Tons new per 24 hr.	300 to 340	25	900	500	550	400	250
Tons total per 24 hr.	300 to 340	30	900	800	550	1,600	750
Circulating load, %	*d*	20	*d*	60	*d*	300	200
Limiting mesh	14	100	35	65 to 100	48	35	48
Overflow: % solids	15	7	10	37	10	36 to 39	15
Mesh of separation (*mog*)	.....	200	100	100	200	48	100
Sand: Tons per 24 hr.	110	5	400	300	300	1,200	500
Solids, %	75	.....	74	80	80	74 to 75	80
Power consumed, hp.: Recip. rakes	.....	.....	5	} 4	4	{	} 6
Bowl	.....	.....	3			{	
Sizing tests *c*	*1*	.....	*2*	.....	.....	*3*	.....
PERFORMANCES							
Overflow: Tons solid per sq. ft. of bowl area per 24 hr.	6.7 to 8.1	0.3	4.7	10	2.1	3.5	1.9
Sand: Tons per ft. of rake width per 24 hr.	37	1.1	67	50	50	200	83
% finer than separating mesh	.....	.....	53	.....	.....	76.1	.....
% <200-m	3.1	.....	18	.....	15	5	.....
Efficiency (Sec. 19, Eq. 163)	.....	.....	67.2	.....	.....	17.2	.....

Mill	McIntyre Porcupine	Homestake	Utah, Arthur	Ray	Idaho-Maryland	Mt. Lyell	Nev. Cons., McGill
MACHINE CHARACTERISTICS							
Number of rakes	2	2	2	2	2	2	2
Duty *a*	*N*	*N*	*N*	*N*	*N*	*N*	*N*
Size of rake tank, width × length, ft.	6×30	6×31 2/3	8×28 1/3	8×28 1/3	8×30	8×30	8×31 2/3
Bowl, diam., ft	20	16	15	18	12	15	18
Slope, in. per ft	.....	2	2	2	2	2	2
Speeds: Reciprocating rakes, s.p.m.	.....	20	19	21	20	23	20
Bowl rakes, r.p.m.	1 1/3	3	3.5	.....	.....	.....	*f*
OPERATING DATA							
Feed: Character *b*	FlC	Sil	Sil	Sil	Sil	Sil	Sil
Specific gravity of solids	4.5	.....	2.7	2.7	2.6	2.9	2.7
Solids, %	25 to 35	17	36	65	34	58	31
Tons new per 24 hr.	240	1,000	1,300	1,500	360	620	.....
Tons total per 24 hr.	720 to 960	1,000	1,300	1,500	825	2,090	.....
Circulating load, %	200 to 300	*d*	*d*	*d*	130	240	.....
Limiting mesh	65	35	8	.....	20	10	.....
Overflow: % solids	8 to 10	9	21	35	22	26	29
Mesh of separation (*mog*)	325	100	65	65	65	65	35
Sand: Tons per 24 hr.	480 to 720	550	730	1,000	465	1,470	1,950
Solids, %	70	72	73	80	73	79	75
Power consumed, hp.: Recip. rakes	6	{ 5	.....	} 5	{	} 7	{ 7.3
Bowl		{ 3	.....		{		{ 2.0
Sizing tests *c*	.....	*4*	*5*	.....	*6*	*7*	*8*
PERFORMANCES							
Overflow: Tons solid per sq. ft. of bowl area per 24 hr.	0.8	2.2	3.2	2.0	3.2	3.5	.....
Sand: Tons per ft. of rake width per 24 hr.	*e*	91	92	125	58	185	244
% finer than separating mesh	.....	45	16.0	.....	48.9	42.2	.....
% <200-m	.....	14	6.4	.....	8.7	11.1	7.5
Efficiency (Sec. 19, Eq. 163)	.....	71.3	81.3	.....	68.0	57.8	46.2

a *L* = light, *N* = normal, *H* = heavy.
b Amyg = amygdaloid; Sil = siliceous with some sulphide; Sul = sulphide; FlC = Flotation concentrate; Cal = calcareous.
c Numerals are reference Nos. of Table 18*a*.
d Open circuit.
e Sand discharged from bowl by spigot.
f Speed adjustable.

Table 18. Performance of bowl-rake classifier—*Continued*

Mill	N. J. Zinc	Wiluna	Idaho-Maryland	Gold Road	Utah, Magna	Miami
MACHINE CHARACTERISTICS						
Number of rakes	2	2	2	4	4	6
Duty *a*	*N*	*N*	*N*	*N*	*N*	*N*
Size of rake tank, width × length, ft.	8×31 2/3	8×36 2/3	8×39	10×30	12×33 1/3	20×42
Bowl, diam., ft	24	15 1/2	25	14	22	28
Slope, in. per ft	2	2	1 3/4	2	2	2
Speeds: Reciprocating rakes, s.p.m.	.....	20	9	22	21	25
Bowl rakes, r.p.m.	2 1/2	4	.....	.....	1 1/2	1.1
OPERATING DATA						
Feed: Character *b*	Cal	Cal	Sil	Sil	Sil	Sil
Specific gravity of solids	3.6	.....	2.7	2.6	2.7	2.7
Solids, %	4.5	70	21	.....	34	59
Tons new per 24 hr.	143	375	350	410	3,010	2,919
Tons total per 24 hr.	143	1,125	350	2,010	3,010	6,917
Circulating load, %	*d*	200	*d*	390	*d*	138
Limiting mesh	?	8	65	20	14	14
Overflow: % solids	1.5	30	5	10	22	40
Mesh of separation (*mog*)	?	65	150	100	48	35
Sand: Tons per 24 hr.	35	750	150	1,600	1,834	3,998
Solids, %	72	82	70	.....	72	76
Power consumed, hp.: Recip. rakes	.....	7.5	.....	10	.....	20
Bowl	.....	4	.....	2	.....	
Sizing tests *c*	.....	*9*	*10*	*11*	*12*	*13*
PERFORMANCES						
Overflow: Tons solid per sq. ft. of bowl area per 24 hr.	0.2	2.0	0.4	2.7	3.1	4.8
Sand: Tons per ft. of rake width per 24 hr.	4.4	94	19	160	150	200
% finer than separating mesh	.....	82	54.4	35	45.2	62.8
% <200-m.	.....	7	29.3	5.4	6.6	8.1
Efficiency (Sec. 19, Eq. 163)	.....	36.8	70.9	38.0	72.3	52.4

does not settle teeters in and below the ring *d*, and the teetering column is bled off at the bottom (coarsest part) by a current generated to and through air lift *e* (CRITICAL-SIZE CONTROL), whence it discharges into splash head *l* and flows through port *m* back into the bowl. Fines overflow the rim of the bowl into an annular launder *o*.

The effect of this combination apparatus is to make it possible to design and operate the settling area and the sand-raking or transport mechanisms separately. This design may be fitted initially to the characteristics of the pulp, and to the tonnage of sand and volume of overflow to be handled; independent adjustment during operation may be made to take care of inevitable day-to-day variations in one or more of these factors.

Sizes. Bowls may be fitted to any of the standard rake classifiers. The procedure in design is to adapt the rake classifier to the sand load and to fit it with a bowl having the proper settling area for the volume of water and size of solid to be taken as overflow.

Performances of bowl-rake classifiers are listed in Table 18.

Use. Bowl-rake classifier is used for separations from 28- to 325-m. (Table 18), but separations at 65-m. or finer predominate; separations at coarser than 35-m. are unusual. The bowl-rake classifier has the great advantage, in the case of feeds that fluctuate in content of desired material, that changes necessary to accommodate changing sand loads can be made without material effect on the adjustments controlling overflow and that by use of variable speed on the bowl rakes, and/or change in dilution, the effect of adjustments in the sand section can be compensated readily.

Dilution varies according to the mesh of the separation. Usual ranges for average ores are about 5 to 7% solids for 325-m., 8 to 12% for 200-m., 13 to 16% for 100-m., 17 to 25% for 65-m., 26 to 33% for 48-m., and 33 to 38% for 28- to 35-m. The range corresponds to difference in settling characteristics of the ores.

If the feed to the classifier is light and slow-settling, higher dilution is required than would be used on a heavy and fast-settling pulp. With some pulps of specific gravity 3.5 to 4.5, the percentage of solids in the overflow is much higher than the above upper limits. Thus in a concentrate-regrind circuit where a 200-m. separation is desired, 15% solids in the overflow is quite common; for a 35-m. separation on a heavy lead-zinc sulphide, it is common to use as high as 45% solids. Both overflow and rake products at high pulp densities tend to be dirty on account of the high viscosity of the pulp. A sharper separation can in all cases be obtained with more dilute pulps, increasing rake and bowl speed to maintain the necessary suspension. It is high dilution with low agitation in any mechanical classifier that makes for the best efficiency.

Table 18*a*. Sizing tests for Table 18 (weight retained, cumulative %)

Mesh.....	8	10	14	20	28	35	48	65	100	150	200	<200
Ref. No.	Material *a*											
1	*F*	....	.....	.....	0.1	0.3	2.2	11.9	28.4	46.1	59.6	67.8	32.2
	S	....	.....	.....	0.3	0.6	6.1	29.6	62.9	85.4	94.4	96.9	3.1
	O	....	.....	.....	.....	.....	.....	.....	.....	.....	.....	.....	.....
2	*F*	....	.....	.....	.....	.....	.....	3	.....	21	33	45	55
	S	....	.....	.....	.....	.....	.....	8	.....	47	68	82	18
	O	....	.....	.....	.....	.....	.....	.....	.....	1.5	6.5	16.5	83.5
3	*F*	....	.....	.....	.....	0.2	3.1	18.9	48.2	72.5	84.6	89.6	10.4
	S	....	.....	.....	.....	0.2	3.8	23.9	56.0	80.9	91.6	95.0	5.0
	O	....	.....	.....	.....	0.1	1.2	8.4	27.9	54.7	72.2	80.5	19.5
4	*F*	....	.....	.....	.....	.....	.....	5	.....	25	37	49	51
	S	....	.....	.....	.....	.....	.....	11	.....	55	75	86	14
	O	....	.....	.....	.....	.....	.....	.....	.....	1	.....	20	80
5	*F*	0.2	4.8	11.6	18.8	26.8	34.5	40.6	47.3	52.6	58.2	63.6	36.4
	S	....	17.4	31.8	44.3	57.0	67.9	76.8	84.0	88.8	91.9	93.6	6.4
	O	....	.....	.....	.....	.....	.....	.....	.....	6.6	.....	25.8	74.2
6	*F*	....	.....	.....	.....	.....	.....	8.0	26.2	42.0	52.9	56.0	44.0
	S	....	.....	.....	1.6	.....	7.3	17.3	51.1	74.2	86.4	91.3	8.7
	O	....	.....	.....	.....	.....	.....	.....	.....	7.6	17.6	27.6	72.4
7	*F*	....	0.3	1.1	.....	6.0	13.5	24.7	40.8	51.9	62.5	68.0	32.0
	S	....	0.4	1.6	.....	8.6	19.3	35.1	57.8	72.4	84.3	88.9	11.1
	O	....	.....	.....	.....	.....	.....	0.1	0.4	3.2	10.8	18.5	81.5
8	*F*	....	.....	.....	0.2	1.2	3.8	11.3	22.8	34.5	44.1	54.5	45.5
	S	....	.....	.....	.....	.....	.....	25.4	58.5	80.5	88.8	92.5	7.5
	O	....	.....	.....	.....	.....	0.7	3.5	11.4	24.0	37.5	50.8	49.2
9	*F*	....	2	.....	.....	.....	.....	.....	12	57	.....	72	28
	S	....	3	.....	.....	.....	.....	.....	18	83	.....	93	7
	O	....	.....	.....	.....	.....	.....	.....	1	7	.....	32	68
10	*F*	....	.....	.....	.....	.....	.....	.....	.....	7.6	17.6	27.6	72.4
	S	....	.....	.....	.....	.....	.....	.....	3.2	17.1	45.6	70.7	29.3
	O	....	.....	.....	.....	.....	.....	.....	.....	.....	1.4	4.5	95.5
11	*F*	....	.....	.....	.....	0.9	5.1	14.8	30.8	53.6	73.3	81.7	18.3
	S	....	.....	.....	.....	1.0	6.0	16.8	36.6	65.1	87.4	94.6	5.4
	O	....	.....	.....	.....	.....	.....	.....	.....	0.9	9.2	22.9	77.1
12	*F*	....	.....	0.2	1.6	5.1	13.2	22.2	31.6	41.7	48.2	56.0	44.0
	S	....	.....	1.0	5.0	14.1	33.9	54.8	72.8	84.9	90.2	93.4	6.6
	O	....	.....	.....	.....	.....	0.4	1.9	6.0	14.0	21.1	31.4	68.6
13	*F*	....	.....	0.8	3.6	9.7	21.7	38.8	50.9	62.0	68.5	73.4	26.6
	S	....	.....	1.4	6.3	16.4	37.2	62.4	76.0	85.3	89.6	91.9	8.1
	O	....	.....	.....	.....	.....	0.8	6.1	16.3	30.7	40.6	49.5	50.5

a *F* = feed, *S* = sand, *O* = overflow.

Speed of bowl rakes is usually variable. As between different classifiers, equivalent speeds are lower the larger the bowl. Range for average ores is from 1 to 3 r.p.m. for a 25-ft. bowl to 3 to 9 r.p.m. for a 5-ft. bowl; it may double with heavy-sulphide feeds. In the low range, speed has small effect on density of overflow, but at the higher speeds, the plows aid suspension, increase pulp density, and will cause coarser overflows for a given volume of overflow.

Capacity, expressed in tons solid in overflow per sq. ft. of bowl area increases regularly with size of overflow (which is normally accompanied by an increase in pulp density). Available records show that, for average ores, tonnage of overflow per sq. ft. of bowl area per 24 hr. may be 0.5 to 1 ton for 325-m. separation, 1 to 1.5 tons for 200-m., 2 to 3 tons, for 65- and/or 100-m., 4 to 5 tons for 48-m., and 5 to 7 tons for 35-m. These figures are somewhat higher than those reported in Table 18.

Critical-size control. Air is supplied at 2 to 3 lb. pressure, the volume ranging from 15 to 45 c.f.m.; the volume required to maintain proper circulation is dependent upon the amount of critical-size material in suspension underneath the bowl in the reciprocating rake compartment. Regulation is based on the extent of superelevation of pulp in the reciprocating-rake compartment required to maintain flow into the bowl. SUPERELEVATION normally should not be more than 2 to 4 in. above the level of overflowing pulp in the bowl; air supply is varied to maintain this value.

Comparative tests at LAKE SHORE with and without the critical-size control on a 16-ft. bowl-rake classifier gave the results shown in Table 18*b*.

Table 18*b*. Effect of critical-size control on performance of bowl-rake classifier

Item	Without critical-size control		With critical-size control	
	T.p.h.	% <200-m.	T.p.h.	% <200-m.
Overflow	8.3	91.8	9.1	96.6
Sands	19.0	22.0	30.8	16.2
Total feed	27.3	37.7	39.9	39.3
Circulating load, ratio	2.3		3.4	
Efficiency, 200-m. basis	51.8		69.0	
% <325-m. in sands	13.5		7.4	
% <1,200-m. in overflow	45.0		44.4	

Efficiency ranges from 17.2 to 81.3 at 12 mills reporting, and averages 57%. This average is close to the individual averages for each of the meshes of separation 48, 65, and 100, indicating that within this range efficiency is independent of separating size. Efficiencies for 35-m. separation (2 cases only) are both below average; that for one case at 150-m. is 70.9. Average efficiency of bowl-rake machines is higher than that for rake classifiers, as is to be expected because of the double guard on both sand and overflow products. The difference lies principally in the extent of removal of finished material from the feed (quantity $f - t$ in the efficiency formula), which is 23 average for the bowl *vs.* 14 for the rake; the character of sand product as measured by $c - t$ is only slightly better in the bowl, 50 average *vs.* 48. Circulating loads are correspondingly lower in the bowl (190 *vs.* 250). This is an important factor to consider when the grinding installation is at or near the limit of volumetric capacity (Sec. 5, Art. 12).

NONMECHANICAL DESLIMERS

These apparatus are all horizontal-current classifiers. All comprise a tank with sides converging to an edge or point. Differences lie in the methods of feeding and discharging, and in the shape of the tank.

8. SAND TANKS

Principles. The essential elements are shown in Fig. 17. Pulp enters behind the perforated baffle A and is distributed in a series of streams, as indicated, across the transverse section of the classifier. In order that a particle may settle out of the stream it is necessary that it settle to the bottom before it is carried through the perforated baffle B at the discharge end. On the discharge side of baffle B the velocity of the rising current is $v = Q/xb$ and as x is less than l, all particles that failed to settle before reaching B will be lifted readily. For analysis of the separating action see Art. 6, discussion of Fig. 12, item *b*, under ***Principle of area.*** It is shown there that the rising velocity for separation at a given mesh c is $V_c = Q/bl$. If the separating mesh is in the Stokes range, the value of V_c in terms of properties of the particle is given in Eq. 7. Hence $Q/bl = gD^2(\delta - \rho)/18\eta$ and

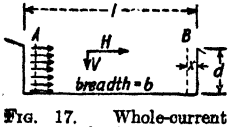

FIG. 17. Whole-current classifier.

$$D_c = \sqrt{18Q\eta/gbl(\delta - \rho)} \qquad (11)$$

It will be noted from Eq. 11 that the size of particle in the Stokes range that can be separated in a whole-current classifier is independent of the depth and of the relative proportions between length and breadth. A similar relationship can be developed for the Newton range, and similitude indicates that the same should hold in the intermediate range.

Sloughing-off boxes or **V-boxes** are the simple, crude form of horizontal-current classifier. They consist of a V-shaped box, with sides sloping 50 to 60° from the horizontal, 10 to 50 ft. long, and 4 to 8 ft. deep. They are usually without partitions, but are discharged by means of spigots, gates, or goosenecks at several points along the length. Their principal use is as rough dewaterers and deslimers where clear overflow or clean sand is not essential. The character of separation may be judged from Table 19; differentiation between spigots is slight.

Table 19. Performance of a 4-spigot V-box

Screen, mm.	Weight, %	
	Combined spigot products	Overflow
0.37	1.2	.....
0.27	2.1	.....
0.16	12.9	.....
0.12	7.9	.....
0.07	13.7	.....
<0.07	62.2	100.0

Sand cones

These are the usual form of horizontal-current box. In essence their action is that of zone *D*, Fig. 12, operating above a relatively compact, nonagitated sand bed. In Fig. 18, tank *A* is usually conical but may be pyramidal. Starting empty, and with the hole at the apex closed, when pulp is fed in a distributed stream, as at *F*, the tank fills, overflow of very fine slime begins, and a bed of settled sand builds until it rises to some such position as that shown. If sand discharge is now begun and maintained at a rate equal to that of sand inflow, classification by horizontal-current action takes place radially across zone *D* from central feed cylinder *B* to overflow lip. The settled sand takes no part in the classifying action. That part of the tank below the upper surface of the sand bed is merely a conduit to lead the sand to the bottom outlet. The difficulties in operation cluster around the attempts to maintain sand discharge equal in rate to sand deposition; differences in design are merely different answers to this problem.

Sand discharge. It is impossible to maintain a regular discharge of sand from a sand bed such as is shown in Fig. 18 through an open pipe under the influence of gravity. The first expedient tried in the mills was intermittent manual opening of the spigot, with time allowed between discharges for the coarser material to build up to a considerable depth, and to squeeze out water and suspended slime. This method was succeeded by a mechanically operated intermittent sand gate. The Caldecott diaphragm in a steep-sided cone was the first successful device for continuous discharge of thickened sand. It was followed by the various forms of automatic discharges, gravity-controlled, described below.

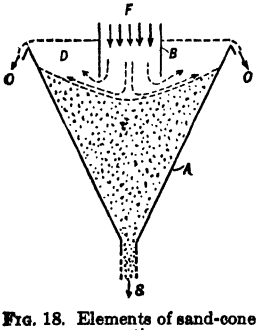

FIG. 18. Elements of sand-cone operation.

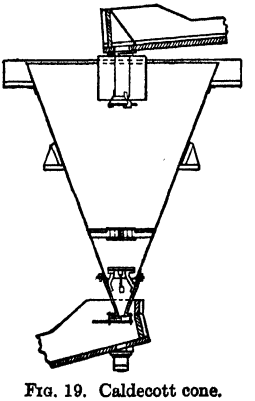
FIG. 19. Caldecott cone.

Caldecott cone (Fig. 19) consists of a sheet-iron conical tank, with apex angle not more than 60° for coarse feed and about 40° for fine, having a disk-diaphragm near the apex, so supported as to leave an annular space between its edge and the cone wall. The cone is center-fed through an inlet pipe 6 to 8 in. in diameter, carrying a disk-shaped baffle a few inches below the lower end. The area of exit between pipe and baffle should exceed the area of the pipe. The feed pipe should project 12 to 18 in. below the overflow level. The lower end of the cone wears most rapidly and is usually a hard-iron casting with removable bushings. It is fitted with an easily replaced sliding gate by means of which the average rate of flow can be regulated. The velocity of the rising current is predetermined within a certain range by means of the cylindrical sheet-iron ring surrounding the feed pipe. This fixes the maximum cross-section of the rising current. In operation the cone is allowed to fill with sand to a height about 2 ft. below the overflow lip at the center and extending nearly or quite to the overflow level at the periphery. The usual dimensions of the cone are 6 ft. (diameter) by 9 ft. (depth) and 8 ft. (diameter) by 10 ft. (depth). The size and placing of the diaphragm are matters of experiment. With sandy feed the diaphragm is placed 12 to 18 in. above the spigot opening and the width of the annular opening is $^3/_4$ to 2 in., the larger figure for finer material. For finest sand and slime the annular opening must be larger, in order to prevent bridging of thickened material. It is made 3 to 6 in. across, and

the diaphragm must, therefore, be carried somewhat higher in the cone. Fig. 19 shows a double diaphragm for treating fine material.

The purposes of the diaphragm are to slow down the flow of sand toward and through the spigot and to prevent center-piping and bridging. Bridging is minimized at the spigot because of the direction from which the solids approach, *i.e.*, obliquely convergent down the walls of the cone from the periphery of the diaphragm. Center-piping is prevented by the intervention of the diaphragm across the axis of the possible pipe. This eliminates rapid settling and discharge of coarse material, which is the cause of piping in ordinary cones. Discharge through the spigot is slowed down by decrease in pressure effected by friction losses in the annular space surrounding the diaphragm, and the rate of approach to the spigot is limited at the same time by the same phenomenon.

Performance. The Caldecott cone has had its greatest development in Rand gold mills, where it has been used to guard tube-mill discharge and to return sands for regrinding. In this service an 8-ft. cone will discharge 400 to 600 tons of <90-m. (0.006-in.) quartzitic sand per 24 hr. in a pulp containing about 30% moisture when the feed contains about 40 to 50% of <90-m. slime.

Results with an 8-ft. double-diaphragm cone at SIMMER & JACK are given in Table 20. At a Mexican mill (*10 JCM 287*) a cone 4 ft. 10 in. deep by 4 ft. diam., fitted with a diaphragm 8 in. from the apex, leaving 1.5-in. annular space, was fed at 240 tons per 24 hr. Results are given in Table 21. At the ST. JOSEPH LEAD Co., Bonne Terre mill (*57 A 432*), a 6-ft. Caldecott cone handled 400 to 500 tons of <2-mm. sand tailing per 24 hr., made an overflow containing no material coarser than 0.1-mm., while the spigot product averaged 28% moisture. The sand level was held about 2 ft. below the overflow. A sizing test of the spigot product is given in Table 22. Mixed jig and table galena concentrate was discharged from a 6-ft. cone with 11% moisture, but intermittent discharge was necessary on account of the variable feed rate.

Table 20. Performance of 8-ft. double-diaphragm Caldecott cone at Simmer and Jack (*11 JCM 323*)

Aperture, inch	Weight, per cent.		
	Sand	Overflow	Feed
Total	58	42	100.0
>0.01	11.8	.....	6.8
0.006	31.4	.....	18.2
0.003	43.1	2.0	25.8
<0.003	13.7	98.0	49.2

Table 21. Performance of 4-ft. Caldecott cone

Aperture, mesh	Weight, per cent.		
	Feed	Sand	Overflow
30	18.5	34.5	0.5
40	10.0	16.5	1.0
80	21.5	33.5	8.0
100	1.0	1.5	1.5
150	12.0	8.0	11.5
200	3.5	2.0	9.0
<200	33.5	3.5	68.5
Moisture, per cent.	90	34	93

Table 22. Sizing test of spigot product of Caldecott cone dewatering tailing, St. Joseph Lead Co.

Aperture, mesh	Weight, per cent.
10	2.59
14	9.61
20	17.64
28	22.95
35	15.13
48	10.87
65	7.27
100	6.65
150	5.18
200	1.25
<200	0.86
	100.00

Automatic diaphragm cone used at MT. LYELL (*38 Aa 109*) is shown in Fig. 20. With no sand in the cone, the counterweight closes the spigot valve. When settled sand rises to the cylinder on the plug rod the drag

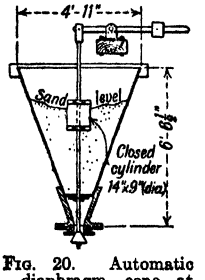

FIG. 20. Automatic diaphragm cone at Mt. Lyell.

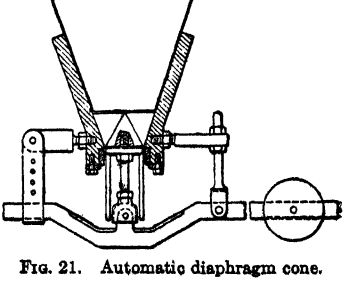

FIG. 21. Automatic diaphragm cone.

of the sand pulls the cylinder down and opens the valve. Performance is shown in Table 23.

Another automatic-discharge device is shown in Fig. 21 (*22 JCM 74*). The counterweight is set to discharge the proper tonnage at the desired percentage of moisture. If the pulp thins down, the velocity of discharge increases, with resultant increase in friction and pressure on the valve plug, then the valve closes somewhat, thus retarding discharge and permitting solids to build up again. The

Table 23. Performance of automatic diaphragm cone at Mt. Lyell

Aperture, I.M.M. mesh	Weight, per cent.					
	Lyell Comstock ore			North Mt. Lyell ore		
	Feed	Sand	Overflow	Feed	Sand	Overflow
20	47.7	62.2	.....	63.6	65.9	.....
40	14.4	12.6	.....	12.3	15.0	.....
60	7.1	5.5	.....	4.2	5.8	.....
90	6.8	10.2	.....	4.2	4.5	0.4
120	5.5	1.2	2.5	3.9	2.8	1.1
150	3.7	6.4	3.8	1.1	0.8	1.2
<150	14.8	1.9	93.7	10.7	5.2	97.3

device gave satisfaction at FERREIRA DEEP mill on tube-mill cones as compared with manual regulation of standard Caldecott cones. The normal moisture content of spigot product was 25% and a sizing test showed 57% >60-m., 33% >90-m., and 10% <90-m.

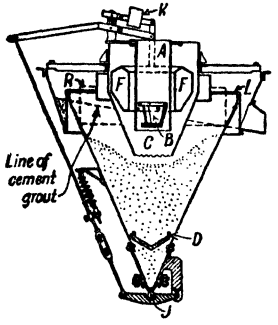

FIG. 22. Allen cone.

Allen cone (Fig. 22) consists of a conical sheet-iron tank, center-fed, with peripheral overflow of slime and automatic regulation of sand discharge. The spigot regulator consists of a spring-controlled link mechanism actuated by a float *F*. Feed entering the center pipe *A* is distributed by the baffle *B*, flows into the tank proper, the sand settles out, and slime overflows the lip *L*. When the upper surface of the settled sand reaches the position shown in the sketch, water backs up in chamber *C*, float *F* is lifted, the valve rod is depressed, and the ball valve *J* opened. Resistance to opening is varied by the weight *K*. The valve seat is carried on a swinging plate, so arranged that when the spigot opening is swung to one side for inspection or replacement, the lower end of the cone is closed by a blank plate. New spigot liners can be dropped into place quickly, thus making it unnecessary to shut down. The cross-section of the overflow may be lessened by introducing a reduction ring *R*, which increases the rising velocity and consequently increases the size of particles overflowed. The effect is shown in Table 24. Diaphragm *D* serves the usual purpose and additionally acts as a catch-all for a certain amount of tramp oversize, thus minimizing plugging of the valve. Standard sizes are given in Table 25.

Performances are given in Table 26.

Table 24. Effect of reduction ring on performance of Allen cone, Shannon Copper Co. (*Allen Cone Co.*)

Aperture, mesh	Weight, per cent.					
	Without reduction ring			With reduction ring		
	Feed	Sand	Overflow	Feed	Sand	Overflow
48	29.9	38.5	.....	37.2	56.4	.....
65	15.3	20.0	.....	12.1	17.5	1.6
100	13.1	16.5	0.4	12.2	17.0	2.7
150	4.1	4.7	0.6	4.7	5.1	3.8
200	6.5	7.5	0.9	2.6	1.2	3.1
<200	31.1	12.8	98.1	31.2	2.8	88.8

Delano (*57 A 440*) says that a 6-ft. cone will treat galena concentrate ranging from 9-mm. down to 5 or 6% <200-m. and carrying 83% water at the rate of 100 tons per 24 hr., will make a spigot discharge containing 12% moisture, and will yield a clear-water overflow. On tailing ranging from 2-mm. to 0.1-mm. the same cone will treat 300 tons per 24 hr., yielding a clear overflow and a spigot product containing 28% moisture. He states that sand coarser than 3-mm. would be difficult to dewater unless it contained a large percentage of fines. Watt (*57 A 440*) says that a 4.5-ft. cone will handle 145 tons per 24 hr. of the undersize of a 10-mm. screen, yielding a spigot product containing 28 to 30% moisture and with less than 3% >200-m. in the overflow solids.

Table 25. Standard sizes of Allen cones for concentrating mills (*Allen Cone Co.*)

Manufacturers' numbers	Diameter at overflow lip	Fall, feed inlet to spigot	Weight, pounds
40–1	3′ 6″	5′ 2″	675
40–0	4′ 6″	6′ 2″	825
40–2	6′ 0″	7′ 9″	1,050
40–3	8′ 0″	9′ 11″	1,600

Table 26. Performance of Allen cones

Mine	Mine La Motte *b*	Mine La Motte *b*	Burro Mountain *b*	Arizona Copper Co. *b*	Shannon Copper Co. *b*	St. Joseph Lead Co., Bonne Terre	Shattuck-Arizona Copper Co.	Shattuck-Arizona Copper Co.	Old Dominion *d*
Character of service	Desliming	Desliming	Desliming	Desliming	Desliming	Dewater. conc.	Desliming	Dewater. conc.	*e*
Tons solid per 24 hr.	146	62	129	370	1,442	120	190	50	.....
Per cent. solids in feed	12.5	7.7	18	25	37	35	35	.....	±5
Per cent. solids in sand	.....	.....	*c*	.....	.....	88	70.5	80	72
Per cent. solids in overflow	.....	.....	*c*	.....	.....	0.02	14	0+	.....
Size of feed	*a*	*a*	6% >65-m. 60% <200-m.	All <6-m. 30% <200-m.	7% >10-m. 30% <200-m.	*a*	.....	.....	*a*
Size of sand product	*a*	*a*	.....	.....	.....	*a*	*a*	*a*	*a*
Overflow, % <200-m.	*a*	*a*	88	77	49	100	*a*	.....	.....
Diameter of tank, ft.-in.	4–6	4–6	4–6	4–6	4–6	6–0	6–0	6–0	4–6

a For screen tests, see Table 26*a*.
b From Allen Cone Co., Bull. 25.
c Blickensderfer (*104 J 76*) reports on similar feed 75% solids in sand and 4% solids in overflow.
d 102 J 508.
e Thickening and desliming table feed.

Table 26*a*. Sizing tests of feed and products of Allen cones, Table 26.

Aperture, mesh	Weight, per cent.										Old Dominion Copper Co.			
	Mine La Motte			Mine La Motte			St. Joseph Lead Co.	Shattuck-Arizona Copper Co.			Feed		Sand	
	Feed	Sand	Overflow	Feed	Sand	Overflow	Dewatered conc.	Sand *a*	Overflow *a*	Dewatered conc.	Weight Per cent.	Per cent. of total Cu	Weight Per cent.	Per cent. of total Cu
4	.....	.....	.....	.....	.....	.....	2.2	.....	.....	.....	.....	.....	.....	.....
6	.....	.....	.....	.....	.....	.....	2.1	.....	.....	0.2	.....	.....	.....	.....
8	.....	.....	.....	.....	.....	.....	5.0	.....	.....	0.5	.....	.....	.....	.....
10	.....	.....	.....	.....	.....	.....	8.5	.....	.....	2.4	.....	.....	.....	.....
14	7.5	9.0	.....	0.9	2.5	.....	10.1	.....	.....	3.1	.....	.....	.....	.....
20	2.5	2.5	.....	2.6	5.0	.....	7.8	.....	.....	2.9	.....	.....	.....	.....
28	3.1	3.6	.....	3.5	7.2	.....	8.2	0.3	.....	3.8	.....	.....	.....	.....
35	6.5	6.5	.....	4.5	9.0	.....	7.2	1.4	.....	3.8	0.34	.....	1.12	0.40
48	49.5	55.0	.....	9.0	17.8	.....	7.7	8.4	.....	4.9	0.85	0.36	2.19	0.70
65	12.9	17.0	.....	8.7	16.9	.....	7.1	14.7	.....	5.7	2.60	0.48	7.92	1.57
100	5.5	4.0	0.4	10.0	20.1	.....	9.1	24.0	1.6	6.4	12.56	2.29	28.25	5.93
150	1.1	1.0	0.4	8.4	12.2	3.8	11.0	23.5	5.3	7.8	18.28	7.22	30.36	17.83
200	0.3	0.3	2.2	6.1	3.9	6.3	5.8	11.9	7.8	8.1	11.74	9.66	13.80	18.83
<200	11.1	1.1	97.0	46.3	5.4	89.9	8.2	15.8	85.3	50.4	53.63	79.99	16.36	49.51

a Desliming cone.

Boylan cone (Fig. 23) consists of a conical or pyramidal tank *a* suspended by rods *b* from a knife-edge on the short end *c* of lever *d*. This lever is suspended at *e*. The long arm connects by means of rod *f* to a short lever *g* whose fulcrum is carried on the lower part of the tank. The working arm of lever *g* carries a conical valve *h*. Feed is introduced at the top at one side, sand settles out and slime overflows on the opposite side. When sufficient sand (about 60 to 75% of the volume of the tank) has collected, the weight of the tank causes rod *f* to be lifted, thus opening the valve *h* and permitting discharge of sand. The tripping point is determined by weights *i*.

Sizing tests of feed and products of a Boylan cone treating rougher-jig tailing are given in Table 27 (*118 J 79*). The efficiency, reckoned on 20-m., is 54.5%.

Table 27. Performance of Boylan cone

Screen, mesh	Weight, per cent.		
	Feed	Sand	Overflow
4	22.5	26.5	.....
8	30.4	33.7	.....
20	24.2	27.9	0.7
35	8.2	8.3	5.0
65	.....	.....	14.7
100	6.0	2.8	20.4
200	3.6	0.4	37.0
<200	5.2	0.4	22.3

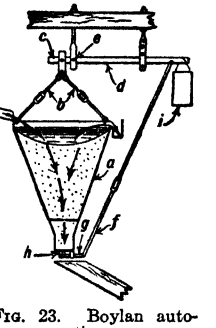

FIG. 23. Boylan automatic cone.

Nordberg-Wood classifier (Fig. 24) is primarily for dewatering sands; it superimposes a vertical sorting column on the characteristic sand cone to act as a safety. It also adds a feed gadget designed to effect spiral flow of the rising current. The essential sand-catching device is the cone *a* mounted in frame *b* which, in turn, is partly supported, via hooks *c* and knife-edges, on the short arm of beam balances *d*. The load is largely balanced, at whatever sand depth in *a* is desired; the remainder of the load is transmitted from the linked ends of *d* through rod *e* to the balance beam *f*, the short arm of which works against the pressure of the settled sand. Thus as the sand level in the cone rises above the predetermined height the long arms of balances *d* rise, *e* is lifted, conical valve *g* opens, and remains open until enough sand has discharged so that the counterweights can depress *e* again. Plug *g* is supported on pin *h* as shown, free to tilt if oversize sticks in the valve; this closes one side of the valve and directs the rush of sand against the obstruction, which may be thereby forced out. Feed bowl *i*, with radial vanes on the wall and alongside ports in the floor as shown, is hung on ball bearings on center-post *j*. Feed launder *k* is arranged for tangential entry of the feed stream, the impulse of which against the vanes revolves the bowl. Sweeps *l* on the underside transmit the swirl to the liquid in the cone. Ring *m*, adjustable in diameter, is provided to permit adjustment of the area and, consequently, velocity of the overflow stream.

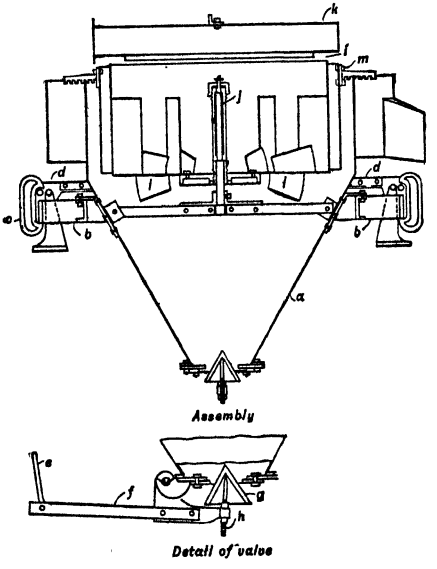

FIG. 24. Nordberg-Wood classifier.

Wuensch (*U. S. Pat. 2,125,665*) describes hydrometer-electric control of a sand cone in closed circuit with a grinding mill. Hydrometers placed just above the sand discharge, at the overflow level, and in the feed well, close and open electrical circuits actuating water-supply valves, ball-mill feeder, and a pump from cone-sand discharge to the ball-mill feed box. A stirring mechanism on a hollow shaft keeps the settled sand relatively fluid and forms a cage around the sand-discharge hydrometer. Operation is obvious.

Action in a sand cone is substantially free settling, with both horizontal and vertical currents. The construction of the feed pipe and its relation to the sand bank are such that the pulp stream starts flowing horizontally in all directions. Heavy, coarse sand is dropped near the center and finer sand near the periphery. With all conditions constant, the surface of the settled solid stabilizes in such a position that the rising velocity in the annular section at the overflow level is just sufficient to lift the coarsest overflow particle, and settled solid is withdrawn through the spigot at a rate just equal to that of deposition.

Sizes and moisture content of the products relative to size and moisture content of the feed are affected by change in rate and character of feed and in size of spigot opening. If the size of particles and tonnage of solid matter in the feed remain constant, change in the amount of water sent to the classifier does not affect either the size of products or the moisture content of the spigot discharge permanently. Increase in quantity of feed water causes instant increase in rising velocity of the overflow pulp with consequent scour of the sands, until the velocity over the increased cross-section is the same as it was before the change, when deposition and spigot discharge again proceed at equal rates. Decrease in quantity of feed water causes deposition and constriction of the overflow stream until deposition and spigot discharge again equalize. Decrease in size of feed particles without change in pulp volume results in lessened deposition and, if discharge continues at the same rate, lowering of the sand surface and increase in cross-section of overflow stream. This results in lessened velocity of the overflow stream and increased deposition until deposition and discharge rates equalize. At this time, since finer material is depositing, finer material also overflows. Coarser feed produces coarser overflow and coarser spigot product.

The moisture content of the spigot discharge is dependent largely upon the percentage of voids in the settled solids, when packed as tightly as they will pack under the conditions of settlement. Coarse material has less voids than fine, hence less moisture; material containing particles of considerable range of sizes has less voids than that closely sized and hence less moisture. Concurrent change of moisture content and tonnage and/or size of feed particles may completely change the character of the discharge through a given spigot. Thus concurrent decrease in moisture content and solid tonnage decreases overflow velocity and tends to cause deposition of finer material. At the same time the surface of the settled solids falls by reason of excess of discharge over deposition, overflow velocity is further reduced and yet finer material deposited. Assuming ultimate equalization of deposition and discharge, stabilization occurs with a large increase in the amount of fines depositing, and there is corresponding increase in the fineness of both spigot and overflow products. The result, as concerns moisture content of the spigot product, cannot be predicted accurately; the greater size range tends toward less moisture and the finer size toward more. If the reduction in moisture content is sufficiently great and there is enough fine solid present to produce a suspension that acts like a liquid of high specific gravity, the carrying power of the overflow may be sufficient to lift coarse material, and if the spigot is changed to prevent lowering of the sand level, the size of the products and the moisture content of the spigot discharge may be maintained unchanged. When the water content of the feed decreases and solid tonnage increases, the respective effects are conflicting; the volume passing may increase or decrease, the carrying power of the current may increase by reason of an increase in specific gravity, and the sand level may either rise or lower, if the spigot size is maintained. The probable result is coarser overflow and an increased tonnage of coarser sand with slight decrease in moisture content. Concurrent decrease in moisture content and size of feed usually results in marked decrease in size of spigot product and overflow, although, owing to increased apparent density of the overflow pulp, it may be possible to keep the overflow size up by decreasing the spigot opening. All other things remaining constant, increase in spigot opening yields finer products and vice versa. Since the spigot opening is ordinarily the only variable in control of the operator he thereby compensates for changes in quality and quantity of feed.

Use of sand cones. The efficiency of sand-slime separation in sand tanks is as good as or better than that obtainable in mechanical classifiers. Thus the two cones at MINE LA MOTTE (Table 26) show efficiencies of 90% at 200-m. and 78% at 150-m. respectively, and the efficiency of the Boylan cone (Table 27) was 54.5% at 20-m. separation. Hence choice between cones and mechanical classifiers should be made on some other basis. Caldecott cones have not been displaced in closed grinding circuits on the Rand, although mechanical machines have been put in new plants as they have been built. Cones have been and are used in a number of the older metallic mills in the United States and Canada; they have wide use in nonmetallic mills. Certainly if a pulp must be elevated in any event, and if separation efficiencies of the order obtainable in mechanical classifiers are acceptable, sand cones should be used unless the tonnage is so large that the multiplicity of tanks necessary makes an unwieldy support and distribution problem. For small mills, if first cost is an item, and if maximum flexibility in the grinding circuit is not essential, the cone is definitely indicated until mechanical classifiers cheaper than are now available come onto the market.

9. SLIME TANKS

Slime tanks are nonmechanical deslimers for making separations at very fine sand sizes. Generically, the different forms are the same, and depend for the separation on utilization of the differences in settling rates of particles of different sizes in water. The specific difference between them lies in the method of presentation to the rising current.

Surface-current tank is shown diagrammatically in Fig. 25. Feed is introduced over the feed sole *a*. The apparent action is that of a shallow current floating across the surface of the body of pulp in the tank. For such a condition the fundamental equation of velocity equilibrium, $d/V = l/H$, would apply. Since, as has already been established, the separating size D_c is a function of the falling velocity V_c of the particle, it follows that with d very small and l relatively large, V_c and D_c will be very small unless H_c is very large. But H cannot be made large because of the drag of the underlying body of pulp, which dissipates the energy of the cross stream in the production of eddies. These are of the general nature shown in Fig. 25 (*27 A 249*). Hence, qualitatively, it appears that H is limited, and very small particles will be dropped in such an apparatus.

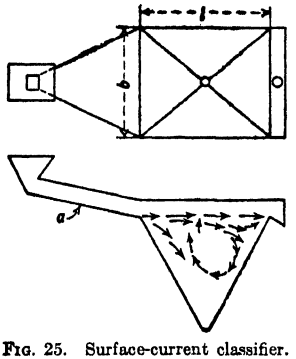

FIG. 25. Surface-current classifier.

Consideration of the condition in a tank such as this which is filling with pulp, focusing attention on the instant before overflow occurs, shows that there is a rising velocity in the tank, of the magnitude $v = Q/lb$. Once overflow has started, unless the feed stream then floats across as a unit, which has been disproved, this same rising velocity persists. Hence the particles dropped out of the surface stream as its velocity diminishes must settle against this rising current, and the velocity of the latter determines the size of the largest particle that can be overflowed. The relationship between size and current is given in Figs. 1 and 2.

Rittinger spitzkasten is the typical form of surface-current classifier. It consists of a series of pointed boxes, similar to the box shown in Fig. 25, increasing in depth and area toward the discharge end. Rittinger recommended that the first box be made about one inch wide for each cubic foot of pulp fed per minute and that the width of each succeeding box be twice that of the preceding. For 20 cu. ft. of pulp per min. he recommended lengths of 6, 9, 12, and 15 ft. respectively for 4 boxes. The sides should slope at least 50° and better 60° from the horizontal. Slopes of the connecting launders should be: about 1/4 in. per ft. for the feed launder, 1/8 in. per ft. from the first to the second box, 1/16 in. per ft. from the second to the third, and 1/32 in. per ft. from the third to the fourth. Richards' experiments (*27 A 249*) indicate that the feed sole should slope about 5° from the horizontal and should enter on the same level as the overflow. The overflow should be level. Eddying will invariably cause much slime to enter the spigot products. Discharge of coarse material is made through pipe-and-plug spigots at the apex of the box; fine material is discharged through goosenecks. In some cases successive boxes are joined so that the upper edge of the division wall is below the overflow level as n Fig. 36 and no connecting launders are needed.

Table 28. Performance of 2-box spitzkasten *a* (*After Richards*)

Screen aperture, mm.	Weight, per cent.		
	Spigot 1	Spigot 2	Overflow
>0.94	0.3	.....	.....
0.67	0.5	.....	.....
0.49	1.5	.....	.....
0.37	1.0	.....	.....
0.27	4.8	.....	.....
0.16	22.0	0.4	.....
0.12	13.2	1.3	0.4
0.07	22.5	10.9	1.6
<0.07	34.2	87.4	98.0

a Baffle plate in second box to direct current downward.

Performance of a 2-box machine treating lead ore, the overflow from a hydraulic classifier, is given in Table 28 (*1 OD 462*).

Desliming cone is a cone with about 60° apex angle, a central feed well, and a distributing septum in the well to eliminate plunge of the feed stream. The action is simple sedimentation against the rising current caused by the overflow. $v = Q/A$, where A is the area, at overflow level, of the annulus surrounding the feed well.

Callow tank (Fig. 26) is an inverted cone with 60° apex angle. The overflow rim is a cylindrical steel band, cleated at intervals to the cone wall near the top, the joint made tight by first packing with oakum and then pouring in a thin cement grout. An endless rubber belt stretched tightly around the metal band is readily leveled, after the tank is full,

by tapping with a wooden mallet. Spigot discharge is effected through a bushing or plug cock at the apex or by a gooseneck siphon. Feed is introduced at the center through a pipe 5 to 12 in. in diameter projecting 6 to 10 in. below the overflow level. A float of 1-in. board, of diameter about 1 in. less than the feed well, perforated with 1/2- or 3/4-in. holes, if desired, is placed in the well. RATING is based on the diameter of the overflow band. WEIGHT ranges from 165 lb. for the 2-ft. size to 650 lb. for the 8-ft.; rated CAPACITY of the 2-ft. cone in de-sliming service is 24 tons per 24 hr.; 4-ft., 100 tons; 8-ft., 400 tons. In slime dewatering, 4-ft., 6 to 8 tons; 6-ft., 14 to 18 tons; 8-ft., 25 to 30 tons.

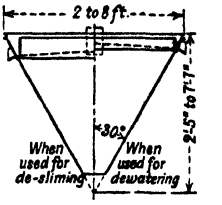

FIG. 26. Callow tank.

Performance. At TONOPAH BELMONT DEVELOPMENT CO. 5-ft. Callow cones handled 70 tons solid per 24 hr. in a pulp containing 85% moisture. The spigot product contained 79% moisture and the overflow 87%. Screen tests of feed and products are given in Table 29. At UNITED EASTERN (*63 A 554*) rake-classifier overflow was sent to 8-ft. Callow cones. The feed to each cone ranged from 160 tons solid and 1,100 tons cyanide solution to 213 tons solid and 970 tons solution (87.3 and 82% moisture respectively) per 24 hr. Spigot discharge was through a 1.5-in. gooseneck fitting 30 in. below the cone overflow. The spigot product at the maximum solid-feed rate given was 73 tons solid and 86 tons solution (54% moisture); overflow, 140 tons solid, 884 tons solution (86.3% moisture). Sizing tests of products are given in Table 30.

Table 29. Screen tests of feed and products of 5-ft. Callow cones at Tonopah Belmont Development Co.

Aperture, mesh	Weight, per cent.		
	Feed	Spigot	Overflow
100	1.0	2.0	.....
150	12.5	15.0	.....
200	14.2	11.0	.....
<200	72.3	72.0	100.0

Table 30. Sizing test of products of 8-ft. Callow cone, United Eastern

Aperture, mesh	Weight, per cent.	
	Spigot	Overflow
65	1.5	.....
100	33.5	.....
150	32.0	2.5
200	21.0	11.5
<200	12.0	86.0

For performance of desliming cones with hydraulic water see *Delano classifier*, Art. 11.

Discharge. The rate of discharge of settled material in slime tanks must be such as to prevent build up, or the devices operate as sand tanks, with scour and reduction of area becoming essential parts of the operation (Art. 8).

HYDRAULIC CLASSIFIERS

These are classifying devices characterized by the use of water additional to that of the feed pulp, introduced so that its direction of flow opposes that of the settling particles. The introduced water is called HYDRAULIC WATER. Its quantity, and, consequently, velocity constitute the principal method of control of operation and results.

Hydraulic classifiers are used primarily to sort out and group together particles of different specific gravities. This is the first of the two supplementary steps, sorting and sizing, in certain methods of gravity concentration (Sec. 11). They are occasionally used to sort sized products containing grains of different specific gravities, in which case they constitute the final concentrators. They are sometimes used for sizing nonmetallic feeds comprising particles of substantially the same specific gravities, because they do closer work than is done by the horizontal-current machines, and are, in general, cheaper in such service than screens.

Hydraulic classifiers are of two types, grouping being based on the degree of crowding of particles in the separating zone; if this zone is relatively uncrowded, so that collision between particles is relatively infrequent, and has no appreciable effects on the results of the operation, the machine is free-settling; if the zone is crowded, and collisions are frequent, so that no particle can pass through without material hindrance by the particles maintained therein, the apparatus is hindered-settling. See also Art. 1. There are many forms of each class.

10. FREE-SETTLING HYDRAULIC CLASSIFIERS

General. Classifiers of this type are characterized by the fact that the sorting column is of the same cross-sectional area throughout its length. Many forms have been built and

used. They may be grouped into two classes, *viz.*, launder type and tank type. LAUNDER CLASSIFIER is essentially a launder (Sec. 18, Art. 16) with sorting columns attached to the bottom at convenient intervals. Richards designated the machines in which the upper end of the sorting column comes directly to the bottom of the launder, SHALLOW-POCKET CLASSIFIER; those in which the launder is deepened above the sorting pocket, DEEP-POCKET CLASSIFIERS. TANK CLASSIFIER consists of a relatively deep V-shaped trough or tank with the sorting columns attached to the bottom thereof.

Shallow-pocket free-settling classifiers include many of the early forms of hydraulic machine, such as the Lake Superior hog-trough, Calumet, Tamarack, Yeatman, Ferraris, Evans, etc. (*1 OD 390 et seq.*).

Evans classifier (Fig. 27) is typical. It consists of a launder *A* with bottom inclined about 1 1/2 in. per ft., to which are attached a plurality of pressure boxes *D*, opening by means of adjustable rectangular transverse openings *B*, *C* into the bottom of the launder. Water is introduced into boxes *D* through pipes *F;* a part flows out through spigot openings *G;* the balance rises through the openings *B*, *C* into the launder. Water input is regulated to give maximum rising velocity at the first box and minimum at the last. Feed enters as indicated, with sufficient water (about 75% by weight) for ready transport, and flows along to the first sorting column, where its horizontal rush is decreased by baffle *E*. Some segregation of coarse and heavy solid to the bottom of the horizontal stream occurs in the flow along the launder. The largest and heaviest particles drop through the slots *B*, *C* and pass out through spigot opening *G*, while the solid unable to settle passes on to the second column. The coarsest and heaviest of the remaining particles are here taken out and the process continues until the lightest solids, unable to settle in the relatively slow current of the last sorting column, leave the classifier.

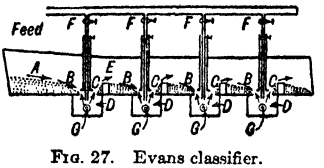

FIG. 27. Evans classifier.

Performance is shown in Table 31. It is reasonably characteristic of the inefficient sand-size separations made by the crude forms of hydraulic classifiers. Comparing the sum of the four spigot products with the overflow, there is a reasonably good size split at about 100-m., much better than can be made by mechanical classifiers or sand cones. As between the individual spigot products there is some differentiation at the coarse end, most apparent in the first spigot, but much of the heavy coarse material in this spigot is unclassified sulphide, which detracts from the value of the material as feed to a final concentrator. As between spigots 2, 3, and 4, the 10%, 50%, and 90% points drop only about one screen interval each, and the average sizes of the fine 10% fractions are only a few hundredths of a millimeter apart.

Table 31. Performance of Evans classifier (*After Richards*)

Screen aperture, mm.	Weights, cumulative per cent.				
	Spigot 1	Spigot 2	Spigot 3	Spigot 4	Overflow
>2.69	0.2	.....	.....	.....	.....
1.89	6.6	2.0	0.4	.....	.....
1.49	18.5	6.6	1.8	0.3	.....
0.945	44.8	23.0	9.0	2.4	.....
0.667	65.8	41.8	22.0	8.2	.....
0.493	82.9	63.0	44.4	23.0	.....
0.371	86.8	67.6	49.4	29.0	0.2
0.270	92.5	79.4	65.2	47.0	0.5
0.158	98.0	94.0	89.0	80.0	5.2
0.119	98.8	97.4	94.2	90.9	10.1
0.073	99.3	99.2	98.8	98.3	25.9
0.069					28.2
0.047					41.1
0.034					50.5
0.025	0.7	0.8	1.2	1.7	57.1
0.019					65.7
0.012					74.4
<0.012					25.6

Efficiency of hydraulic classifiers in concentrating mills is not, of course, to be judged entirely on sizes of the spigot products examined without regard to mineralogical composition. The settling ratios (Art. 1) largely determine the amenability of the products to subsequent concentration. But it is a purpose of the classification to make additionally a separation into short-range grades suitable for efficient final separation on shaking tables (Sec. 11, Art. 22), and performance must be judged also in this respect.

Deep-pocket free-settling classifier is typified by the RICHARDS VORTEX CLASSIFIER (Fig. 28). It differs from the shallow-pocket apparatus by providing pockets above the sorting columns of sufficient size and depth to effect a rough segregation of the feed to the column, sending along immediately most of the material that could not settle in the sorting column proper and holding back material that might settle in the column long enough to give it an opportunity to do so. The vortex fitting used at the

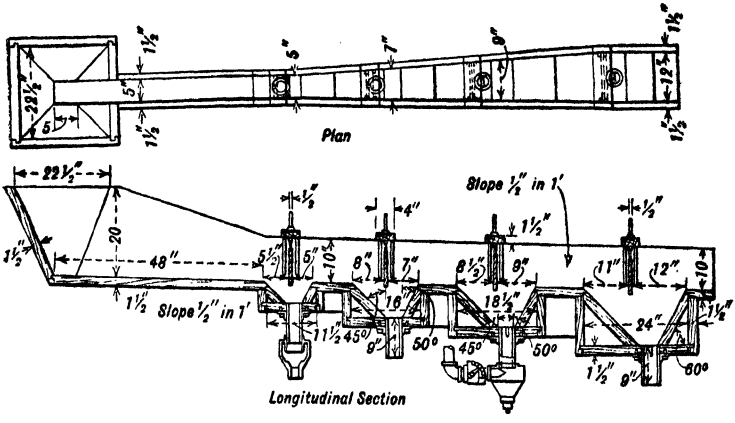

FIG. 28. Richards launder-type vortex classifier.

bottom of the sorting columns is shown in Fig. 29. Water entering the tangential inlet pipe takes on a swirling motion around a vertical axis and retains this motion in rising through the sorting column,

Table 32. Performance of Richards vortex classifier (*After Richards*)

Screen aperture, mm.	Weights, cumulative per cent.				
	Feed	Spigot 1	Spigot 2	Spigot 3	Overflow
>0.907	0.4	0.0	1.5	0.0	0.0
0.566	21.0	52.0	19.4	0.4	0.1
0.427	35.8	76.6	39.3	1.9	0.4
0.351	48.2	90.9	62.9	5.6	0.8
0.277	58.1	96.1	81.1	12.5	1.6
0.206	67.1	98.7	90.7	24.6	2.0
0.137	77.1	99.7	98.9	54.1	5.7
0.130	80.7	.....	99.7	62.3	6.3
0.107	84.8	0.3	0.3	37.7	6.6
<0.107	15.2	.....	.....	.....	93.4

with the result that eddies around horizontal or inclined axes are eliminated. This elimination goes to prevent the presence of fine sand and slime in the spigot products. The ideal condition in the sorting column is a uniform current vertically upward, but this cannot be attained. A home-made substitute for the vortex fitting is shown in Fig. 30. It is intended to bolt to the bottom of a roughing pocket. Performance of a 3-spigot vortex classifier is shown in Table 32.

Free-settling tank classifier is shown diagrammatically in Fig. 31. Sorting columns are of the same types as used on launder classifiers but the tank affords better opportunity for roughing off slime.

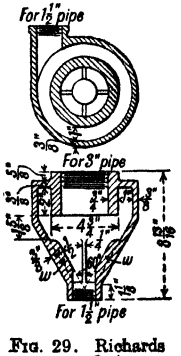

FIG. 29. Richards vortex fitting.

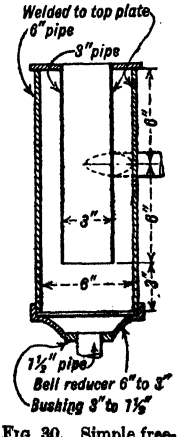

FIG. 30. Simple free-settling launder-type classifier column.

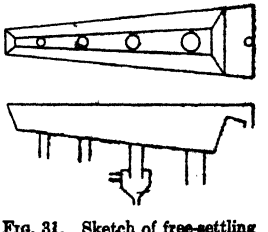

FIG. 31. Sketch of free-settling tank classifier.

Spitzkasten with hydraulic water are used in some Joplin zinc mills to prepare feed for table concentration. Table 33 (*57 A 453*) gives results of the operation of a 9-box classifier of this type.

Table 33. Performance of 9-compartment hydraulic spitzkasten on Joplin zinc ore

	Feed	Spigot numbers									Overflow
		1	2	3	4	5	6	7	8	9	
Size of box at top, in. square		16	21	22	28	30	35	41	48	45	
Depth of box, in.		24	26	30	36	46	46	54	54	54	
Spigot diameter, in.		1	7/8	7/8	7/8	3/4	1/2	3/8	3/8	3/8	
Tons per hour		0.73	0.80	0.67	0.37	0.47	0.24	0.14	0.22	0.08	
Screen aperture, mesh		Weight, per cent.									
20	0.4	0.8	0.7								
35	15.0	25.8	21.5	16.1	9.3	3.2	0.7	0.2	0.1		3.8
65	32.1	38.5	43.0	40.3	35.4	25.6	11.2	5.4	1.3	1.0	0.1
100	19.0	15.8	15.7	18.2	21.5	27.0	26.2	16.4	7.3	4.8	4.5
150	18.7	10.8	11.3	14.3	18.2	24.6	34.2	33.8	24.8	27.0	4.4
200	6.5	3.6	3.6	5.0	7.6	10.0	13.3	16.6	21.9	20.3	3.0
<200	8.3	4.7	4.2	6.1	8.0	9.6	14.4	27.6	44.6	46.9	84.2

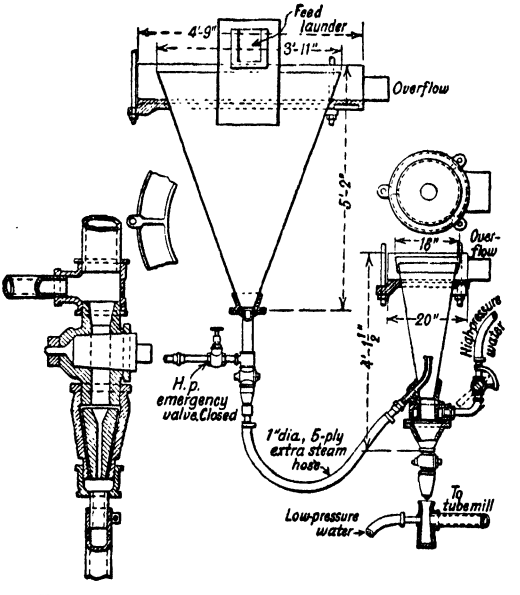

FIG. 32. Series classification in cones at Homestake.

Table 34. Performance of series cones at Homestake

Aperture, mesh	Overflow from large cone		Small cone			
			Overflow		Sand	
	Weight, per cent.	Gold, dollars per ton	Weight, per cent.	Gold, dollars per ton	Weight, per cent.	Gold, dollars per ton
Total	8.8		4.5		7.5	
On 50					47.0	2.00
80	5.5	1.09	12.5	0.53	34.0	2.97
100	3.5	1.45	11.0	0.88	10.0	4.66
200	22.0	1.36	28.0	1.36	6.0	5.40
<200	69.0	1.36	48.5	1.22	3.0	4.43

Series classification in cones as practiced at HOMESTAKE (*22 IMM 90*) is shown in Fig. 32. Feed enters the larger cone, which is run with a small discharge bushing so as to overflow about 88% of the total solids. The small cone reworks the spigot product of the first. Sizing-assay tests of products are given in Table 34.

Use of free-settling hydraulic classifiers is past in mills in which close classification is essential. They are inefficient in both sizing and sorting. But when rough work at relatively high capacities is desired, or a machine that can be knocked together by any carpenter and blacksmith is wanted, they answer as well as or better than the more elaborate hindered-settling types.

11. HINDERED-SETTLING HYDRAULIC CLASSIFIERS

Hindered-settling classifiers differ from free-settling in one characteristic only, *viz.*, that the sorting column is constricted at the lower end. This constriction may be obtained in any way. Several forms of hindered-settling sorting columns are shown in Fig. 33. The same general types are found in hindered-settling as in free-settling mill machines, *viz.*, launder and tank.

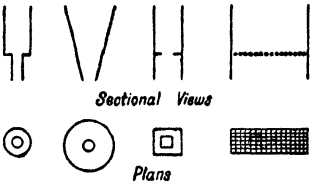

FIG. 33. Methods of obtaining constriction in hindered-settling sorting columns.

Action in hindered-settling column. The rising velocity of the water passing the constriction is, of course, higher than that in the part of the column above it. Consequently falling particles here meet greater resistance (Art. 1) and some of them can fall no farther. Neither can they rise. As a result, a mass of particles becomes trapped above the constriction, and pressure builds up in the mass. Particles thereupon move upward along the path of least resistance, which is usually the center of the column, until they reach a region of lower pressure at or near the top of the settled mass; here, under conditions in which they previously fell, they fall again. As particles from the bottom rise at the center, those from the sides fall into the resulting void. A general circulation is thus built up, more irregular the larger the column. This continual movement, with the particles at all times in intermittent light moving contact with neighbors, is called TEETER; that part of the classifier column above the constriction in which the teetering condition exists is called the TEETER COLUMN. A teeter column acts as though it were a liquid, in that the lighter particles presented to it cannot penetrate, but appear to float on it; heavier particles penetrate and become a part of it but cannot leave it at the bottom; heaviest particles sink through it and fall through the constriction. Its effective density is higher than the density calculated from its volume and the weights of its solid and liquid constituents (composite density). This is due to the frictional, particle-to-particle resistance offered to particles seeking to penetrate. This resistance is analogous to viscosity. Hence total resistance R' may be expected to be of the general nature of that given by the Stokes equation (Art. 1, Eq. 1), *e.g.*, $R' = K'D\eta'V'$, and the settling velocity of particles therethrough to be $V' = K'D^2(\delta - \rho')/\eta'$, where the letters denote the same items as in the equations of Art. 1, but the primes relate certain of them to the teeter column. None of the primed quantities has been quantified, but qualitative work confirms the equations to the extent that resistance of the teeter column increases as its composite density ρ' increases, and that columns made up of rough and irregular grains offer more resistance η' than one composed of smooth and rounded grains.

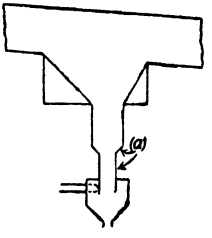

a. Reducer and nipple added to change classifier from free-settling to hindered-settling.

FIG. 34. Sketch of one spigot of Richards hindered-settling vortex classifier, launder type.

Launder-type hindered-settling hydraulic classifiers

The simplest of these is a machine obtained by placing a reducer and a short pipe nipple of smaller size on the lower end of the sorting column of a Richards vortex classifier (Fig. 28), and placing the vortex fitting on the lower end of the added nipple. Fig. 34 is a sketch of one spigot of such a classifier. Such a change in an existing classifier will result in a reduction in capacity, but by replacing the sorting column of the existing classifier by a teeter column of larger diameter, and dropping the existing column to a position below the added member, capacity will be maintained. For discussion of the ratio of diameters of sorting column and teeter column, see Art. 12.

Hindered-settling columns. A major difficulty in operation of hindered-settling classifiers is to prevent sand from banking against the walls of the teeter chamber, thus decreasing capacity by decreasing the cross-section of the column. This in itself, if it were a stable condition, could be allowed for in design. Actually, however, it is cyclic, and, since rising velocity increases as column diameter decreases, the product of the column becomes progressively coarser as it sands up, then is suddenly finer after the accumulated load slumps and discharges. Various methods of agitation have been used to combat this condition. Fig. 35 shows two forms of column in which agitation is effected by the hydraulic water. In the Richards form the converging conical sorting chamber is perforated with vertically alternating rows of radial and tangential water inlets which serve to maintain free movement and maximum fluidity in the mass of teetering grains. The Deister column consists of a downwardly converging cylindrical casting *a* in which are suspended a number of cone-shaped castings *b* with radial slots staggered vertically as shown. Water enters radially through a plurality of small holes from the pressure chamber *c*. The columns may be bolted directly to the bottom of a launder, but are better placed at the bottom of roughing pockets. Mechanical agitation is used in the Richards-Janney type (see below).

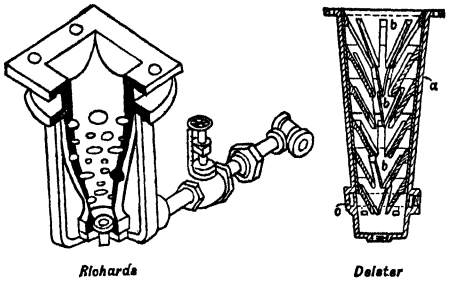

FIG. 35. Hindered-settling sorting columns.

Tank-type hindered-settling classifiers

Richards-Janney classifier (Fig. 36) is of the tank type with hindered-settling sorting columns. It consists of a number of pyramidal settling tanks, increasing in size from feed to discharge end, so joined as to form weirs well submerged. To the bottom of each pyramidal frustum is attached the classifying mechanism proper, consisting of a cylindrical

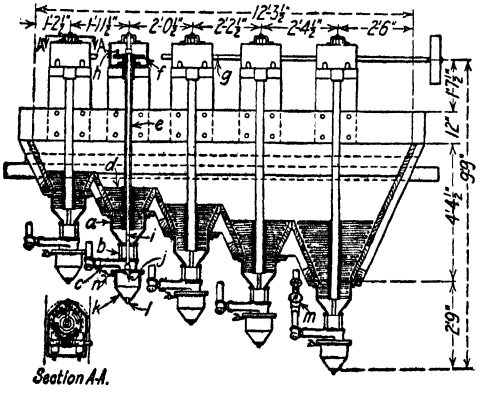

FIG. 36. Richards-Janney classifier.

teeter chamber *a*, converging at the bottom to the cylindrical glass-walled sorting column *b*, below which is a tangential hydraulic-water inlet *c*. The rotating stirring arms *d* carried on a hollow spindle *e* depending from the worm gear *f*, which is driven by a worm on shaft *g*, prevent sanding in the teeter column, and minimize eddying. Cams *h* on the upper side of gear *f* operate a lifting arm on the tappet rod *i* which carries on its lower end a rubber ball-valve that seats on a bushing *j*. The valve is thereby opened several times per min., according to the tonnage to be discharged (*e.g.*, 2 to 6 times), and discharges into the retarding chamber *k* which in turn discharges through a pipe-and-plug spigot *l*. The rate of discharge is controlled by the size of the spigot opening and by the air cock *n*. Water inlet to each column is regulated by a dial valve *m*. The stirring arms make about 1.5 r.p.m. The glass sorting column, by permitting observation of the actual sorting operation, makes regulation of the classifier easier than otherwise. The intermittent discharge effected by

the ball valve makes it possible to discharge a thick spigot product through a large opening (1/2-in. to 1 1/2-in.) and thus decrease water consumption while eliminating clogged spigots. The retarding chamber prevents serious downward rushes of pulp, which would entirely disarrange classification, when the ball-valve opens.

Performance is shown in Table 35.

Table 35. Performance of Richards-Janney classifiers at Utah Copper Co.

Product.....	Feed *a*		Spigot 1		Spigot 2		Spigot 3		Spigot 4		Overflow	
Aperture, mesh	Weight, %	Cu, %	Weight, %	Cu, %	Weight, %	Cu, %	Weight, %	Cu, %	Weight, %	Cu, %	Weight, %	Cu, %
10	.....	.....	1.8	0.93	0.5	0.87	.....	.....	.....	.....	.....	.....
20	16.4	0.89	39.8	1.04	24.0	0.83	3.4	0.74	.....	.....	.....	.....
30	18.2	0.88	31.3	1.10	32.1	0.85	15.7	0.64	0.2	0.77	.....	.....
40	9.5	0.93	13.4	1.40	17.6	0.91	21.7	0.63	0.8	0.48	.....	.....
50	12.6	0.96	16.8	1.94	15.9	1.19	24.2	0.65	9.4	0.42	.....	.....
60	3.8	0.98	1.3	2.44	2.8	1.62	8.9	0.76	7.9	0.40	0.1	1.86
80	6.7	1.08	2.1	2.89	3.1	2.26	13.9	0.97	24.5	0.40	0.4	0.80
100	4.3	1.09	0.7	3.94	1.4	3.64	4.5	0.65	18.9	0.56	1.3	0.50
120	1.8	1.21	0.4	4.37	0.4	4.24	1.7	2.05	10.0	0.69	0.8	0.41
150	3.8	1.45	0.0	4.25	0.5	4.95	0.4	2.87	14.5	1.12	5.7	0.50
200	1.1	1.49	0.4	4.77	0.1	4.08	2.2	3.57	3.3	1.63	2.3	0.49
<200	21.8	1.72	2.0	2.65	1.6	2.68	3.4	3.93	10.5	4.03	89.4	1.34
Totals.....	100.0	1.14	100.0	1.30	100.0	1.08	100.0	0.88	100.0	0.99	100.0	1.22
Moisture, %...	75		76		56		52		75		87	

a 475 tons per 24 hr.

Density-controlled discharge

Modern hindered-settling hydraulic classifiers are designed to eliminate, as far as possible, the necessity for manual control of spigot discharges. This is done by hydrostatic balancing of the quicksands in the teeter columns against some form of automatic control on the discharge ports therefrom. The Bunker Hill, Fahrenwald, and Pellett classifiers are typical.

Fahrenwald sizer (Fig. 37) consists of a tank *A* with divergent vertical side walls, the bottom part of which is divided into classifying pockets *B* by transverse partitions *C*. The

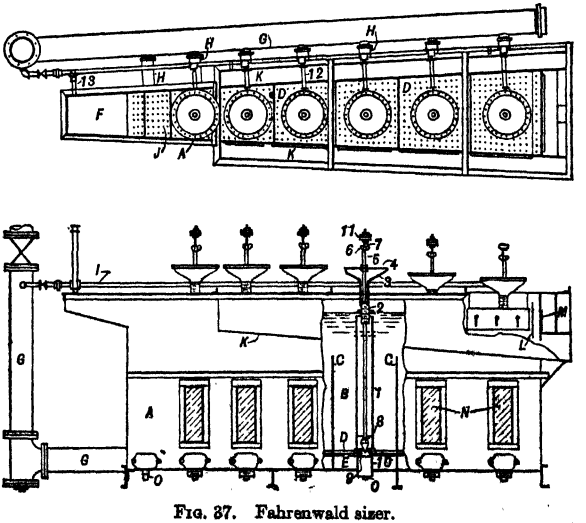

FIG. 37. Fahrenwald sizer.

bottoms of these pockets consist of perforated constriction plates *D*, which separate them from pressure compartments *E*. Hydraulic water from a constant-head tank is supplied

Table 36. Performance of Fahrenwald sizer

Mill	Amer. Cyanamid Co., Brewster, Fla.	Aramayo Mines, Bolivia	Aramayo Mines, Bolivia	Lehigh Coal & Navigation Co.	Minera de Oruro	Nev.-Mass. Co., Mill City, Nev.	Southern Phosphate Co., Bartow, Fla.	Southern Phosphate Co., San Gully, Fla.
Size, mean width × length, ft..	2 2/3 × 8	3 × 9	2 × 8 1/2	2 2/3 × 14 3/4	2 3/4 × 6 1/3	17 2/3 *a*	1/2 and 2 2/3 × 14 3/4	1/2 and 2 2/3 × 14 3/4
Compartments	3	11	6	6	6	8	6	6
Feed: Material	Phosphate	Cassiterite-pyrite	Cassiterite-pyrite	Anthracite	Tin ore	Scheelite ore	Phosphate	Phosphate
Tons per 24 hr.		400	200	805	200	500	670	1,200
Sp. gr. solids	2.65			1.85	3.2	2.70	2.65	2.65
% solids	50	80	78	41.5	77	47	33 to 50	65.0
Spigots, % solids	40	75 to 44	73 to 55	37 to 51	60	25 to 66	40 to 60	30 to 60
Overflow, % solids	5.0	3.0	1.0	8.0	5	3	4 to 10	5.0
Water, gal. per ton	720	151	201	490		320	1,700 to 2,150	1,667
Sizing tests, *b*	*1*	*2*	*3*	*4*	*5*	*6*	*7*	*8*

a Length.

b Numbers refer to Table 32a.

through header *G* and individual branches *H* to each pressure compartment. Feed introduced at *F* is agitated by hydraulic water in a preliminary pocket *J*. The suspension flows thence along the upper part of the tank, and the sands settle out, roughly classified, into pockets *B*. Slimes overflow the sides of *A* over adjustable weirs into launders *K*. The finest sands overflow weir *M* after submergence by baffle *L*. Water rising through the constriction plates forms teeter columns with the roughly classified sands which settle in the various classifying pockets *B*. The bottoms of these teeter columns are discharged automatically by a mechanism designed to maintain uniform density of teeter bed. This consists of a standpipe *1*, into which is threaded at its upper end neck *2* of diaphragm chamber *3*, closed at the top by a thin rubber sheet *4*. A small pipe *5* is attached by a watertight clamp to the center of the diaphragm, and, through the medium of wing nut *6* supports valve stem *7*, which is threaded to the wing nut. Stem *7* carries tapered plug *8*, which fits into valve seat *9*. Pipe *1* is slotted at the bottom as indicated to afford connection with *B*. As sands accumulate in pocket *B* water rises in *2* above the outside level, in hydrostatic balance with the teetering suspension in *B*. It thereby exerts upward pressure on *4*, which raises *5*, *6*, and *7*, thus opening valve *8* and allowing sand to escape through spigot *10*. The vertical position of *4* is adjustable by the threaded connection on *2*, and counterweights *11* are provided for fine adjustment of back pressure to control density of the teeter columns. Water admitted through pipe *12* produces downflow in *1* to flush out solids that might disturb the hydrostatic balance. Windows *N* afford observation of the teeter columns to aid in valve adjustment. Spigots *O* (at one side of *10*) discharge the accidental material that passes the constriction plates into chambers *E*. Pipe *13* supplies dilution water.

Motor-controlled discharge involves use of an electric modulating motor to lift the valve stems; the motor is controlled by the action of either a float or a pressure device in standpipe *1*. This arrangement is claimed to make control more sensitive.

Performances at several plants are shown in Table 36.

Bunker Hill classifier (Fig. 38) is similar to the Fahrenwald sizer, differing therefrom in the means of adjusting spigot-discharge rate to teeter-column density. It comprises a plurality of teeter chambers *A* in a rectangular box *B*, successive chambers being separated by submerged weirs *C*. A V-shaped roughing tank *D* surmounts the teeter box; it is fed through a distributing screen at one end and discharges over a weir at the other. Sand discharge is through lift valve *E* and spigot *F*. Valve *E* is opened at predetermined intervals by cam *G* and the intervening link mechanism; the extent of opening at each revolution of the cam is determined by the height of float *H*, which depends upon the composite density of the teeter column

Table 36*a*. Sizing analyses for Table 36 (percentages *b*)

Mesh	10	14	20	28	35	48	65	100	150	200	325	< last screen	Tons per 24 hr.	Solids, %
Ref. No. / Product *a*														
1 F		7.5	22.0	19.8	19.7	16.0	8.3	4.3	1.7	0.4		0.3		50
1		15.4	38.9	19.7	13.4	9.0	3.6							40
2		11.9	44.1	27.1	14.1	2.3	0.5							40
3		1.4	12.8	17.5	30.2	28.1	7.6	1.2	0.7	0.5				40
O		0.6	7.0	12.3	14.7	25.7	27.8	10.7	0.8	0.3		0.1		1.6
2 F			1.3		36.8		38.0	9.7	5.4	4.0		4.8		
% S			21.3		22.3		17.4	13.9	12.2	12.7		13.9		
1			3.2		54.1		31.0	6.0	2.6	1.6		1.5		
% S			28.7		17.3		28.3	22.6	15.6	15.7		15.6		
2			0.9		34.5		47.0	10.7	4.2	1.9		0.8		
% S			14.6		21.5		27.7	25.3	21.7	21.3		9.4		
3			0.3		25.0		53.6	12.8	5.2	2.3		0.8		
% S			21.0		19.9		21.4	27.9	24.9	22.3		20.4		
4					4.6		55.0	26.0	9.0	4.2		1.2		
% S					4.1		8.2	19.8	25.0	24.8		20.7		
5					1.6		34.2	37.0	16.4	7.2		3.6		
% S					3.1		4.4	10.8	19.8	27.6		21.9		
6					0.4		10.8	26.8	28.0	20.0		14.0		
% S					0.0		2.5	3.0	5.6	14.4		22.8		
3 F			1.5		36.5		39.8	11.2	6.5	3.2		1.3		
% S			27.1		26.4		20.3	9.4	11.5	12.9		21.9		
1			3.1		53.5		33.2	5.9	2.6	1.1		0.6		
% S			27.2		31.7		25.8	22.0	20.3	21.1		24.3		
2			2.3		50.1		36.9	7.0	2.6	0.8		0.3		
% S			24.7		29.8		26.4	16.4	15.5	20.7		24.5		
3			1.1		37.8		47.0	9.4	3.4	1.0		0.3		
% S			21.6		25.0		24.3	19.1	17.9	20.2		24.9		
4			0.3		17.8		54.2	16.5	6.8	3.3		1.1		
% S			21.9		24.5		20.2	16.6	15.6	18.3		23.8		
5					1.6		32.0	35.4	18.4	9.4		3.2		
% S					22.4		15.1	11.5	8.4	12.7		25.7		
6							4.7	33.9	33.5	20.7		7.2		
% S							14.0	5.7	7.4	14.8		29.1		
4 F	1.5	5.9	12.0	17.3	17.4	13.9	10.9	9.6	4.8	1.8		4.9	805	41.5
% ash	21.4	20.6	20.3	20.3	22.4	24.3	28.2	35.8	46.4	47.7		46.9		
1	6.9	21.8	32.9	26.5	10.2	1.3	0.2	0.2					116	43.1
% ash	72.7	84.5	88.2	91.6	93.5	88.5	69.2							
2	5.4	17.4	25.1	21.2	19.0	8.6	2.5	0.7	0.1				107	36.8
% ash	15.4	24.6	37.6	63.2	88.5	93.1	91.6	84.4						
3	2.2	11.2	25.1	27.8	16.7	8.5	5.0	2.7	0.6	0.2			124	51.7
% ash	7.4	11.1	12.1	20.2	43.3	67.3	81.2	86.7	81.9					
4	1.0	7.2	22.6	29.5	17.0	9.8	7.2	4.6	0.9	0.2			116	44.6
% ash	8.8	7.9	9.5	14.2	33.5	69.8	86.5	92.2	86.9					
5		0.8	4.8	22.1	34.7	18.9	9.5	6.2	2.2	0.5		0.3	113	50.8
% ash		7.9	6.3	7.2	7.9	18.7	39.6	69.7	82.9	83.7		71.9		
6			0.9	4.2	21.0	35.0	21.6	11.3	4.3	1.2		0.6	110	37.2
% ash			9.5	7.7	7.7	10.4	17.5	48.6	85.4	91.5		86.6		
O					1.7	9.5	20.4	23.1	12.8	6.2		26.1	119	8.0
% ash					7.8	7.7	9.6	18.7	35.4	42.7		48.5		
5 F						7.5	17.1	20.5		41.1		13.8		
1						12.4	15.9	22.3	20.5	11.3	14.8	2.8	8.4	
% Sn						3.0	4.1	5.3	7.5	8.5	7.8	13.3		
2						15.1	21.3	25.8	20.2	9.3	6.3	2.0	13.5	
% Sn						2.0	3.0	5.1	8.4	11.4	10.2	10.4		
3						3.3	10.9	20.9	24.5	19.3	17.0	4.1	12.0	
% Sn						1.8	1.8	3.0	5.2	6.8	7.8	12.5		
4						3.8	13.7	26.7	26.4	15.3	11.3	2.8	13.6	
% Sn						1.4	1.5	3.0	6.2	8.9	9.0	11.9		
5						0.4	3.4	16.6	24.4	26.2	23.0	4.6	30.1	
% Sn						2.0	0.9	1.4	2.7	5.0	6.8	12.9		
6							6.7	7.1	26.8	30.6	30.8	4.0	19.9	
% Sn							1.2	1.0	1.7	4.0	7.9	20.2		

Table 36*a*. Sizing analyses for Table 36 (percentages *b*)—*Continued*

Mesh		10	14	20	28	35	48	65	100	150	200	325	< last screen	Tons per 24 hr.	Solids, %
Ref. No.	Product *a*														
6 *c*	F	.....	.....	.....	1.8	5.0	13.4	17.8	22.0	16.6	11.0	.....	12.4	.....	47
	1: % G	.....	.....	.....	10.1	17.4	27.0	23.1	.....	.....	.....	.....	22.4	.....	63
	% $CaWO_3$	.....	.....	.....	.....	.....	.....	12.1	11.7	15.6	27.0	.....	33.6	.....	.....
	2: % G	.....	.....	.....	.....	12.6	27.7	27.2	18.1	.....	.....	.....	14.4	.....	64
	% $CaWO_3$	.....	.....	.....	.....	.....	.....	.....	.....	4.2	21.5	.....	74.3 *d*	.....	.....
	3: % G	.....	.....	.....	.....	.....	37.5	39.8	.....	.....	.....	.....	22.7	.....	66
	% $CaWO_3$	.....	.....	.....	.....	.....	.....	.....	.....	10.3	34.2	.....	55.5 *e*	.....	.....
	4: %G	.....	.....	.....	.....	.....	14.0	38.2	30.7	.....	.....	.....	17.1	.....	66
	% $CaWO_3$	.....	.....	.....	.....	.....	.....	.....	.....	31.4	31.9	.....	36.7 *e*	.....	.....
	5: % G	.....	.....	.....	.....	.....	.....	36.9	27.3	24.9	.....	.....	10.9	.....	66
	% $CaWO_3$	.....	.....	.....	.....	.....	.....	.....	.....	.....	9.8	.....	90.2 *f*	.....	.....
	6: % G	.....	.....	.....	.....	.....	.....	12.0	36.2	30.7	17.2	.....	3.9	.....	53.5
	% $CaWO_3$	.....	.....	.....	.....	.....	.....	.....	.....	.....	6.3	.....	93.7 *g*	.....	.....
	7: % G	.....	.....	.....	.....	.....	.....	.....	20.4	36.0	28.8	.....	14.8	.....	27.5
	% $CaWO_3$	.....	.....	.....	.....	.....	.....	.....	.....	.....	.....	.....	100 *h*	.....	.....
	8: % G	.....	.....	.....	.....	.....	.....	....	4.3	23.1	40.4	.....	32.2	.....	25.4
	% $CaWO_3$	.....	.....	.....	.....	.....	.....	.....	.....	.....	.....	.....	100 *i*	.....	.....
	O	.....	.....	.....	.....	.....	.....	.....	.....	5.1	18.3	.....	76.6	.....	3.0
7	F	.....	.....	11.8	7.8	9.7	16.1	20.8	21.5	.....	.....	.....	12.3	670	.....
	1, 2	.....	.....	90.0	.....	.....	.....	.....	.....	.....	.....	.....	10.0	54	.....
	3	.....	.....	15.6	12.2	13.5	19.1	19.4	13.9	.....	.....	.....	6.3	214	.....
	4	.....	.....	3.4	6.6	10.9	20.3	25.0	21.3	.....	.....	.....	12.5	188	.....
	5	.....	.....	.....	.....	.....	18.8	30.5	31.2	.....	.....	.....	19.5	107	.....
	6	.....	.....	.....	.....	.....	.....	22.3	40.5	.....	.....	.....	37.2	80	.....
	O	.....	.....	.....	.....	.....	.....	17.2	31.2	.....	.....	.....	51.6	27	.....
8	F	.....	4.2	5.0	5.8	10.0	18.2	28.4	20.2	5.0	.....	.....	3.2	1,200	65
	% B.P.L. *n*	.....	69.6	68.6	52.5	33.4	26.4	19.9	17.2	20.2	.....	.....	33.0	.....	.....
	% Insol.	.....	7.8	11.5	29.6	54.6	64.9	72.8	77.9	73.4	.....	.....	50.1	.....	.....
	1 *j*	.....	66.1	19.5	.....	.....	.....	.....	.....	.....	.....	.....	14.4	24	60
	% B.P.L. *n*	.....	71.2	68.7	.....	.....	.....	.....	.....	.....	.....	.....	63.0	.....	.....
	% Insol.	.....	6.6	10.2	.....	.....	.....	.....	.....	.....	.....	.....	23.4	.....	.....
	2, 3 *j*	.....	38.2	34.0	.....	.....	.....	.....	.....	.....	.....	.....	27.8	72	60
	% B.P.L. *n*	.....	69.6	69.2	.....	.....	.....	.....	.....	.....	.....	.....	60.6	.....	.....
	% Insol.	.....	7.0	9.7	.....	.....	.....	.....	.....	.....	.....	.....	24.4	.....	.....
	4 *k*	.....	3.0	11.9*m*	20.4*m*	35.6*m*	23.2	5.0	.....	.....	.....	.....	0.9	240	60
	% B.P.L. *n*	.....	65.3	65.6	46.0	32.6	35.1	42.3	.....	.....	.....	.....	43.6	.....	.....
	% Insol.	.....	12.9	13.4	39.2	57.0	52.9	44.2	.....	.....	.....	.....	43.6	.....	.....
	5 *k*	.....	.....	.....	1.4*m*	9.7*m*	36.2	39.8	.....	.....	.....	.....	12.9	240	50
	% B.P.L. *n*	.....	.....	.....	55.4	35.4	21.5	25.7	.....	.....	.....	.....	33.2	.....	.....
	% Insol.	.....	.....	.....	25.1	52.5	71.5	67.7	.....	.....	.....	.....	57.0	.....	.....
	6 *k*	.....	.....	.....	.....	3.9	20.0	57.2	18.2	.....	.....	.....	0.7	240	30
	% B.P.L. *n*	.....	.....	.....	.....	47.8	20.7	20.3	34.8	.....	.....	.....	46.3	.....	.....
	% Insol.	.....	.....	.....	.....	34.4	72.4	72.5	54.8	.....	.....	.....	40.0	.....	.....
	O *l*	.....	.....	.....	.....	.....	5.1	25.6	42.3	14.6	.....	.....	12.4	.....	5
	% B.P.L. *n*	.....	.....	.....	.....	.....	42.7	15.4	18.9	23.9	.....	.....	38.4	.....	.....
	% Insol.	.....	.....	.....	.....	.....	38.6	77.8	75.4	68.6	.....	.....	38.0	.....	.....

a F = feed; G = gangue; numbers are spigot numbers; O = overflow.

b Sizes are % passing preceding screen and retained on designated screen; assays are of this product.

c Quantities in the lines "%G" and "%$CaWO_3$" are percentage distributions of total gangue and total scheelite respectively in the various products, *e.g.*, of the total gangue in spigot product No. 1, 10.1% was >28-m.; of the total scheelite therein, 12.1% was >65-m., etc.

d 200~310-m.

e 200~325-m.

f 200~350-m.

g 200~375-m.

h 200~430-m.

i 200~450-m.

j Finished product.

k Combined for feed to table flotation (see Sec. 3, Figs. 52, 53).

l Waste.

m Light-colored phosphate particles of less than average density.

n Distribution of total B.P.L.

Product	F	1	2, 3	4	5	6	0
%	100	4.5	13.0	26.7	17.1	15.6	23.1

Performance. At BUNKER HILL & SULLIVAN a 30-in. 5-spigot machine handled 165 tons feed per 24 hr. with 645 gal. hydraulic water per ton of feed. Sizing-assay test of products is given in Table 37.

Table 37. Performance of Bunker Hill classifier at Bunker Hill & Sullivan

	Spigot number					Overflow
	1	2	3	4	5	
Tons per 24 hr.	15	40	30	25	30	25
Per cent. of total feed.	9.1	24.2	18.2	15.2	18.2	15.2
Per cent. of total lead.	20.7	29.0	15.8	10.9	8.1	15.5

Mesh	Percentages											
	Weight	Pb	Weight	Pb	Weight	Pb	Weight	Pb	Weight	Pb	Weight	Pb
8	6.0	17.1	.....	.....	.....	.....	.....	.....	.....	.....	.....	.....
10	25.7	20.0	15.3	3.5	.....	.....	.....	.....	.....	.....	.....	.....
14	27.9	14.5	23.7	5.9	22.2	0.0	.....	.....	.....	.....	.....	.....
20	17.6	49.2	18.6	7.7	18.5	2.4	8.8	0.0	.....	.....	.....	.....
28	.....	.....	15.2	10.9	17.0	4.0	10.6	0.0	.....	.....	.....	.....
35	.....	.....	12.6	18.2	18.2	1.4	19.4	0.8	8.0	0.0	.....	.....
48	.....	.....	.....	.....	9.5	18.0	15.8	0.0	12.4	0.0	.....	.....
65	.....	.....	.....	.....	.....	.....	16.5	5.7	21.7	0.0	.....	.....
100	.....	.....	.....	.....	.....	.....	12.5	38.6	22.8	2.1	.....	.....
150	.....	.....	.....	.....	.....	.....	.....	.....	19.4	0.0	29.4	1.1
200	.....	.....	.....	.....	.....	.....	.....	.....	.....	.....	26.4	6.3
<200	22.8	30.2	14.6	42.8	14.6	46.1	16.4	13.5	15.7	28.7	44.2	21.8
Totals *a*	100.0	25.7	100.0	13.5	100.0	9.8	100.0	8.1	100.0	4.7	100.0	11.6

a Assay of feed, 11.3% Pb.

Pellett classifier (Fig. 39) attains automatic spigot discharge by causing the hydrostatic pressure of the teeter column to subtract weight from one arm of a beam balance

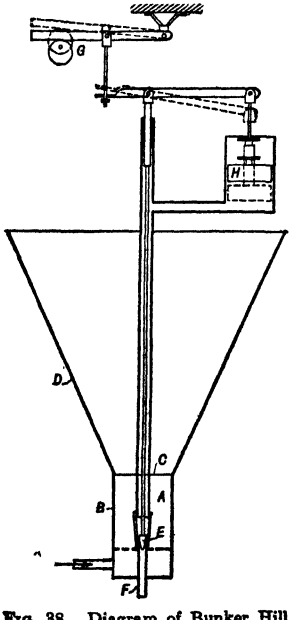

FIG. 38. Diagram of Bunker Hill classifier.

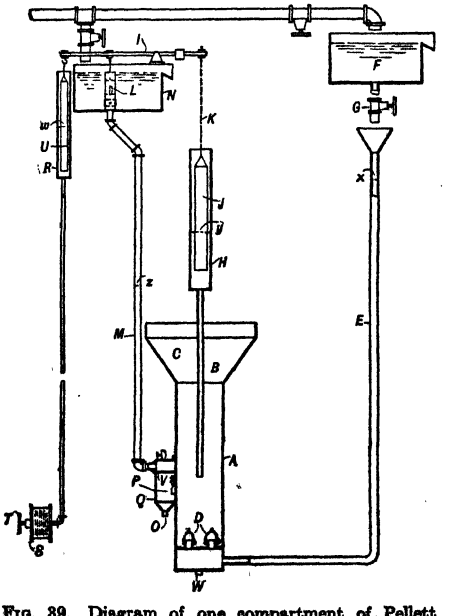

FIG. 39. Diagram of one compartment of Pellett classifier.

which controls a valve, the flow through which controls, in turn, the opening of a flutter valve on the corresponding spigot discharge. In the figure, *A* is an elongated teeter trough compartmented by submerged weirs *B*; *C* is the overlying trough in which roughing is

effected by the horizontal carrying current of the feed stream. Trough *A* is made exceptionally deep so that the lower part of the teeter column itself will serve to distribute hydraulic water introduced through capped nozzles *D*. Taking *A* as typical of any one compartment of a multi-spigot apparatus, continuously receiving roughly classified sands from the transport stream in *C*, it receives at the same time a constant flow of water through pipe *E* from constant-head tank *F* through valve *G*, manually set to maintain a predetermined level *x* in *E*. The corresponding rising velocity in *A* determines the classification therein, with a feed of given mineralogical composition, and constant teeter-column height and density. Constancy in *A* is maintained by the hydrostatic balance in column *H* and the reaction of the water in *H* on beam balance *I*. As water level *y* in *H* rises owing to increased density of the teeter column in *A*, float *J*, suspended on chain *K* from *I*, rises and correspondingly depresses slide valve *L*. Water level *z* in column *M*, through which column water flows continuously from constant-level tank *N* to and out of spigot *O*, falls, and the outside pressure on flutter valve *P* are correspondingly reduced; *P* thereupon opens and sands discharge from *A* into box *Q* and thence through *O*. Column *R* is a remote-control device; a constant volume of water in *R* and of air in bellows *S* maintains water at a level *w* in *R* dependent on the extension of *S* as determined by handwheel *T* located at the point of remote control; float *U* is thus caused to load or unload the extended arm of *I* as desired. Items *V* are perforated baffles designed to prevent vortex action in *Q*. *W* is a drain plug. Glass windows are provided in *A* and *Q* and near *x* as desired. Substitution of items *D* for the usual constriction plate is claimed to eliminate considerable operating difficulty (J. S. Pellett, *PC*).

Performance. A 20-spigot machine at NEW JERSEY ZINC CO. (Franklin) treats 240 tons per 24 hr. of <20-m. magnetic-separator tailing (Sec. 2, Fig. 106) with a consumption of 3,400 gal. of water per ton of solid. Spigot discharges average 50% solids. Size distribution in products is presented in Table 38.

Table 38. Size of products of Pellett classifier at New Jersey Zinc Co., Franklin, percentages by weight

Mesh	Feed *a*	Spigot No. 1	Spigot No. 2	Spigot No. 3	Spigot No. 4	Spigot No. 5	Spigot No. 6	Spigot No. 7	Spigot No. 8	Spigot No. 9
20	.....	0.31	.....	.....	.....	.....	.....	.....	.....	.....
28	1.28	13.88	3.77	3.28	1.19	0.27	0.17	.....	.....	.....
35	9.38	59.44	39.41	37.65	25.60	18.90	10.88	2.85	0.42	0.42
48	13.43	22.31	36.06	37.31	39.59	38.91	41.33	26.76	18.33	8.49
65	17.48	3.74	18.87	19.17	26.11	29.32	31.97	42.31	40.42	49.48
100	18.76	0.16	1.68	2.42	7.17	11.23	14.46	23.15	32.92	28.24
150	19.42	0.16	0.21	0.17	0.34	1.10	1.02	4.74	7.49	12.31
200	12.79	.....	.....	.....	.....	0.27	0.17	0.19	0.42	1.06
<200	7.46	.....	.....	.....	.....	.....	.....	.....	.....	.....

Mesh	Spigot No. 10	Spigot No. 11	Spigot No. 12	Spigot No. 13	Spigot No. 14	Spigot No. 15	Spigot No. 16	Spigot No. 17	Spigot No. 18	Spigot No. 19
28	.....	.....	.....	.....	.....	.....	.....	.....	.....	.....
35	0.73	0.34	0.67	0.23	.....	.....	.....	.....	.....	.....
48	4.01	2.04	1.35	1.14	0.51	0.96	0.38	0.90	0.32	0.36
65	47.90	41.16	22.90	29.98	11.61	8.89	4.56	2.15	0.96	0.53
100	30.97	36.73	43.10	39.59	40.40	44.96	41.83	36.38	23.47	16.58
150	13.84	17.01	24.58	22.88	34.34	30.77	35.36	33.15	38.92	42.07
200	2.37	2.38	6.73	5.72	12.23	12.26	15.97	22.58	29.26	29.23
<200	0.18	0.34	0.67	0.46	0.51	2.16	1.90	4.84	7.07	11.23

a Partially deslimed product from an Allen Cone, consisting principally of willemite and calcite with a small amount of minerals of intermediate sp. gr., mainly pyroxene. Each spigot feeds one Wilfley table.

Concenco classifier, also known as St. Joe classifier, is of the constriction-plate type, with a classifying box like the Bunker Hill, but lacking automatic features. Spigot discharge is controlled by changing spigot bushings; water, by pinchcocks on rubber hoses from the header. Uniformity of results depends on constancy of feed characteristics.

Performance. At the LEADWOOD mill a 10×140-in. 14-spigot machine handles 1,900 tons per 24 hr. with a consumption of 420 gal. of water per ton of solid. Screen tests of feed and products are given in Table 39. At the FEDERAL mill (ST. JOS. LEAD CO.) a 10×240-in. 24-spigot machine is fed 4,400 t.p.d.; at MINE LA MOTTE a 10×120-in. 12 spigot machine receives 700 t.p.d. Size distribution of products at the latter plant is similar to that at LEADWOOD (Table 39).

Table 39a shows a condensed comparison of the screen analyses of Table 39.

Table 39. Size of feed and products of Concenco classifier at Leadwood, percentages retained

Mesh	Feed	Spigot number														Overflow
		1	2	3	4	5	6	7	8	9	10	11	12	13	14	
10	0.9	2.3	3.2	2.3	1.2	1.1	0.6	.....	.....	.....	.....	.....	.....	.....	.....	.....
14	7.4	14.6	19.3	17.6	13.4	12.8	10.9	4.0	1.1	0.2	0.2	.....	.....	.....	.....	.....
20	14.3	22.0	25.6	25.6	24.9	26.6	27.1	17.2	10.5	4.7	2.7	0.7	0.3	.....	.....	.....
28	22.2	26.7	27.7	27.8	31.0	33.1	35.6	42.0	39.2	29.4	19.3	7.7	5.5	0.8	.....	.....
35	16.8	15.5	13.9	13.8	16.2	15.9	16.6	24.1	34.7	42.3	39.8	31.1	24.0	7.3	.....	.....
48	11.6	8.4	5.8	6.6	7.4	6.2	5.9	8.3	10.5	17.0	25.7	38.5	45.4	48.5	9.7	0.5
65	7.9	4.3	2.0	2.6	2.6	2.2	1.6	2.0	2.1	3.7	7.3	14.2	16.7	31.2	60.7	10.6
100	7.5	3.6	1.5	2.2	1.9	1.3	0.9	1.4	1.1	1.5	2.9	5.2	5.5	8.6	23.0	31.2
150	3.9	1.4	0.6	0.7	0.7	0.5	0.5	0.5	0.5	0.7	1.1	1.5	1.6	2.3	4.7	16.4
200	2.0	0.7	0.2	0.5	0.4	0.2	0.2	0.3	0.2	0.3	0.6	0.7	0.8	1.0	1.7	10.3
<200	5.5	0.5	0.2	0.3	0.3	0.1	0.1	0.2	0.1	0.2	0.4	0.4	0.2	0.3	0.2	31.0

This breakdown indicates that the classifier was making essentially only 6 products of different concentrating characteristics, *viz.*, spigot 1, spigots 2 to 7 incl., spigots 8 to 10 incl., spigots 11 to 13 incl., spigot 14, and the overflow. This is not to say that a 5-spigot machine would have made the same size separation; it would not. Rather, by comparison with a similar analysis of screen test 5 on Table 36*a* (which is the only test on Table 36*a* that is properly comparative), it indicates that the advantage of automatic control of spigot discharges lies in reduction in the number of spigots required to do a given job of separation, and puts the choice on the balance between size of tank and complexity of apparatus. If the tonnage running is so large that the spigot products of the automatic classifier must be split to two or more tables, for example, the longer trough of the nonautomatic machine and its ability to do the splitting nearer the point of subsequent treatment are advantages in its favor.

Delano classifier (Fig. 40) is essentially a slime cone with hydraulic water added so as to produce hindered settling. The teeter column is maintained above and around the adjustable conical plug in the apex of the apparatus.

Performances at three of the Missouri mills of St. Joseph Lead Co. are given in Table 40.

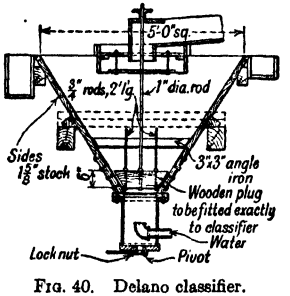

FIG. 40. Delano classifier.

Table 39*a*. Breakdown of Table 39

Product	Initial size, mesh *a*	Screen retaining maximum weight	Size retaining 50%, between meshes
Feed	10	28	28 & 35
Spigot 1	10	28	20 & 28
2	10	28	20 & 28
3	10	28	20 & 28
4	10	28	20 & 28
5	10	28	20 & 28
6	10	28	20 & 28
7	14	28	20 & 28
8	14	28	28
9	14	35	28 & 35
10	14	35	28 & 35
11	20	48	35 & 48
12	20	48	35 & 48
13	28	48	35 & 48
14	48	65	48 & 65
Overflow	48	100	100 & 150

a Final size <200-m. in all products.

12. DESIGN OF HYDRAULIC CLASSIFIERS

There are several cases to consider, *viz.*, (1) free-settling shallow-pocket launder type; (2) deep-pocket types; (3) tank types; (4) hindered-settling columns for any of the above. The first case involves design of the free-settling sorting column and the launder, and consideration of the diameter of the spigot aperture; the second, that of a roughing pocket above the sorting column, whether the latter be free- or hindered-settling; the third, the design of the tank for removing slimes; the fourth, the relative areas of sorting column and teeter chamber.

Design of free-settling sorting column. The data required are: (1) tonnage of solid matter to be passed; (2) average size of all of the light-mineral grains that are to settle; (3) average diameter of the smallest light-mineral grains that are to settle. From Fig. 2, or from the proper formula (see Art. 1), or best, from laboratory settling tests on the material to be classified, determine the velocity of rising current necessary to raise all light-

Table 40. Performances of 5-ft. Delano classifiers at St. Joseph Lead Co.

Mill	Bonne Terre			Desloge			Leadwood		
Feed, t.p.d.	1,500			1,650			2,200		
Solids, %: Spigot	58			56			60		
Overflow	21			31			.....		
Water, gal. per ton	93			85			33		
	Percentages retained								
Mesh	*F*	*S*	*O*	*F*	*S*	*O*	*F*	*S*	*O*
6	.....	.....	.....	0.1	.....	.....	.....	.....	.....
8	.....	.....	.....	0.2	0.2	.....	.....	.....	.....
10	0.2	0.4	.....	2.0	3.3	.....	0.3	0.3	.....
14	3.3	2.8	.....	9.1	11.5	.....	6.6	8.2	.....
20	5.5	7.8	.....	12.7	15.3	.....	10.9	13.2	.....
28	16.4	19.0	.....	13.6	16.1	0.1	15.8	18.9	.....
35	13.9	18.7	.....	12.3	15.2	0.1	12.5	15.1	.....
48	9.6	13.3	.....	8.1	9.4	0.2	10.0	10.9	0.5
65	9.1	11.9	0.1	5.8	6.5	1.0	5.9	6.6	0.6
100	8.0	9.4	3.7	5.0	4.6	4.6	5.4	5.4	3.2
150	3.9	3.4	6.7	4.7	3.4	8.6	4.5	3.8	8.1
200	6.0	3.7	14.4	4.6	2.8	11.5	4.0	3.1	10.8
<200	24.1	9.6	75.1	21.8	11.7	73.9	24.1	14.5	76.8

mineral grains that are to be overflowed; also the average free-settling velocity of the light-mineral grains that are to be settled. The difference between these two figures gives the average settling rate of the light-mineral particles in the spigot product. The volume of the tonnage to be dropped per unit of time, reckoning all solid as having the specific gravity of the light-mineral, divided by the resultant falling velocity of this material, gives the average solid cross-section of the falling stream of solids. The area of the sorting column should be made at least 50% more than this to allow for voids in the mass of settling grains. This allowance, plus the additional allowance that is inherent in the calculation because of the smaller volume and higher settling velocities of the heavy-mineral grains, is sufficient.

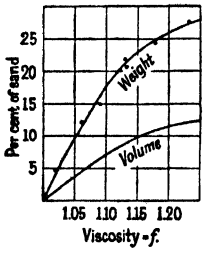

FIG. 41. Relation between pulp consistency and viscosity (*after Richards and Dudley*).

Launder slope and size must be such as to cause the material to travel between sorting columns with the water available. General data on launder slopes are given in Sec. 18. Normally a slope between $1/2$ and 1 in. per ft. will be sufficient.

Spigot diameter, effective head on spigot, size of particles to be discharged and moisture content of spigot product are interrelated.

Flow of sandy pulps through pipe-and-plug spigots is different from that of water by reason of friction of the solid particles against the walls, and inner friction of the mass. Richards and Dudley (*51 A 398*) call the sum of these effects the viscosity of the pulp and give the curves shown in Fig. 41 for determination of this factor, *f*. These curves are the result of experimental work with a siliceous sand (sp. gr. = 2.72) ranging in size from about 0.1- to 1.4-mm. The experimenters used this value in the formula, $Q = Ac\sqrt{2gh}/f$, derived from the fundamental hydraulic-flow equation, where Q = volume discharged, A = area of spigot opening, c is a coefficient of discharge depending on the shape of the orifice, ranging from 0.85 to 0.95 for ordinary pipe-and-plug spigots, g is the acceleration due to gravity and h the head on the orifice.

Example: Required the size of opening to discharge 40 tons of sand (0.1~1.4-mm., sp. gr. = 2.81) per 24 hr., as a pulp containing 25% solids, through a pipe-and-plug spigot with conical receiving end, under a head of 3 ft. The percentage of sand by volume is the governing factor in this case and is 10.6. From Fig. 41, *f* for this pulp is 1.17. Using c.g.s. units and substituting known quantities in the flow equation

$$A = \frac{1.17 \times 1{,}480}{0.88\sqrt{2 \times 980 \times 91.4}} = 4.5 \text{ sq. cm.}$$

and the diameter of the spigot = 2.4 cm. = 0.94 in. For coarser sands, higher values of *f* must be used and *vice versa*. With sand of the size and sp. gr. experimented with, the maximum volume percentage that could be continuously discharged without clogging was 13.

The spigot aperture should be as large as is consistent with the head and the volume of material to be passed. The limiting lower diameter is theoretically 3- to 5-times the

diameter of the largest particle passing (see Sec. 18) but this factor rarely enters on account of the fact that tonnage requirements demand a larger opening.

Design of roughing pocket is the same for both free- and hindered-settling classifiers. The fundamental principle is that the rising velocity across the area xy (Fig. 42) should be the same as that in the free-settling column below. The volume moving past this section is that of the incoming pulp plus the added rising water less that of all previously settled solid. It is wise to keep the section x–y as nearly square as possible in order to reduce eddying. The slope of the sides of the pocket should be between 60 and 75° from the horizontal, the steeper the better, in order to prevent sands from banking. If banking occurs the work of the column is disarranged every time the bank caves; this is a frequent occurrence unless the feed is extraordinarily regular. Steepness of slope must be balanced against resulting loss of headroom.

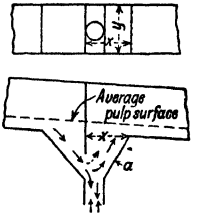

FIG. 42. Roughing pocket.

Design of classifier tank is the same for both free- and hindered-settling machines. The tank is fundamentally a deep pocket for roughing out slimes and is, therefore, calculated to have a surface area such that the velocity of the rising current across the horizontal section at the level of the overflow lip will lift the coarsest particle that it is desired to overflow. The volume of rising current is the feed-pulp volume, plus the total volume of hydraulic water rising in all sorting columns, less the volumes of solid passing out of the spigots. The slope of the sides and discharge end should be at least 60° from the horizontal and better 70 to 75°, to prevent banking. The feed end may slope as little as 45°, dependence being placed on the plunging effect of the incoming pulp to prevent banking here. The bottom slope should be 1 1/2 to 3 in. per ft.; the greater slope gives greater capacity but tends to throw oversize into the later spigots. The sides of the tank necessarily flare toward the overflow end. Their slope is kept constant throughout the length. A safety spigot without rising current should be provided beyond the last hydraulic sorting column in order to discharge sand that is carried past this column but cannot be overflowed. This spigot may discharge continuously or intermittently according to the performance of the classifier; its product will be predominantly fine sand, but will contain considerable slime.

Design of hindered-settling column. The area of the constriction is determined in the same way as the area of a free-settling sorting column. The constriction may be a hole in a plate or at the bottom of a conical tube, if no rising current is to be employed, but with rising current a plurality of small holes is better than a single large one. Experiments at ANACONDA (*46 A 266*) indicated that tubes a couple of inches in length tapped into a plate were better than a perforated plate or screen alone. The ratio of the area of the teeter chamber to the area of the constriction is important. Experiments at ANACONDA (*ibid.*) showed that for each size of grain there is a certain maximum density that can be maintained in the teeter chamber and yet permit discharge of solid through the constriction. If the ratio of the area of the teeter chamber to that of the constriction is too great, no sand can fall through the constriction when full teeter exists, and if the current is reduced to allow sand to fall, banking occurs in the teeter chamber and capacity is reduced; if the ratio is too small, teeter cannot be maintained but free settling will take place. The ANACONDA experiments indicated that the PERMISSIBLE DENSITY, meaning that co-existing at full teeter with free discharge through the constriction, varies inversely as the square root of the surface of a given weight of grains. The ratios of area of teeter chamber to area of constriction necessary to give the permissible density for different grain sizes may be read from Fig. 43.

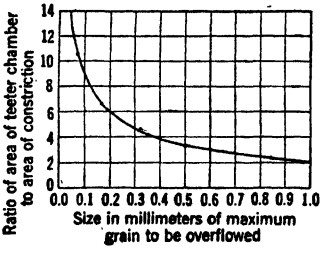

FIG. 43. Ratio of areas of teeter chamber and constriction in a hindered-settling column.

Design of a hindered-settling tank classifier involves all of the elements of design of other types.

Example: To design such a machine with 4 spigots, to treat 200 tons per 24 hr. of <2.5-mm. feed in a pulp containing 25% solids, overflow <0.07-mm. material, and divide the sands into 4 products of such nature that the size range of the light-mineral particles will be the same in each spigot. Assume that screen analysis of the material shows the following size-weight relations: <0.07-mm., 8 tons per 24 hr.; 0.07~0.68-mm., 72 tons; 0.68~1.29-mm., 56 tons; 1.29~1.90-mm., 32 tons; 1.90~2.5-mm., 32 tons.

To determine the constriction area for the first sorting column: The volume of solid to be passed per second, taking the sp. gr. of the light mineral at 2.6, = 4,040 × 32 = 129,000 cu. mm. The mean diameter of the solids that are to settle = (1.90 + 2.50)/2 = 2.2-mm. The settling velocity of the mean particle = 178 mm. per sec. (From Fig. 2, observed data.) The settling velocity of the smallest particle = rising current to be supplied = 163 mm. per sec. The net falling velocity of the solid = 178 − 163 = 15 mm. per sec. The cross-section of the falling solid, considered as a solid bar, = 129,000/15 = 8,600 sq. mm. The area of the constriction should be 1.5-times this area = 1.5 × 8,600 = 12,900 sq. mm. In similar fashion the areas of the other constricted sections are found to be: column 2, 6,680 sq. mm.; column 3, 14,100 sq. mm.; column 4, 11,030 sq. mm. If single pipes were to be used for the sorting column, 5-, 4-, 6- and 5-in. pipes respectively could be chosen. Most designers would furnish 5-in. pipes for the first two columns and 6-in. for the last two on account of greater simplicity in construction. The areas of teeter columns may be obtained by multiplying the constriction areas by the following factors taken from Fig. 43: No. 1, 1.5 (extrapolated); No. 2, 1.9; No. 3, 2.8; No. 4, 10.5; making the areas, on the basis of 5- and 6-in. sorting columns as above, 30, 38, 81 and 304 sq. in. respectively. The corresponding nearest standard pipe diameters are 6 in., 7 in., 10 in., and 20 in. The length of sorting column necessary increases with the size of material that is to be overflowed. Bardwell (*46 A 266*) states that 4 in. is sufficient for a deslimer column and 8 in. for most cases. The area of the tank at the overflow level is computed to give a rising current of 4.1 mm. per sec. with the feed water plus the rising hydraulic water overflowing. The feed water is 600 tons per 24 hr. The volume of hydraulic water rising cannot be calculated accurately but may be estimated with sufficient precision by assuming that 50% of the area of the constriction is unoccupied by solid. Under this assumption the available area in 5-in. standard pipe is 6,450 sq. mm. and the volume rising, at 163 mm. per sec., is 1,050,000 cu. mm. per sec. The volumes from the other columns are 755,000, 642,000, and 38,200. The total overflow is 8,805,200 cu. mm. per sec. The required area = 8,805,200/4.1 = 2,140,000 sq. mm. = 23.2 sq. ft. A tank averaging about 2 to 2.5 ft. wide by 9 to 12 ft. in length is indicated. The depth of the tank and the size of spigot opening are interdependent. The first spigot must discharge 32 tons of solid per 24 hr. with, say, 96 tons of water. The determination of proper depth (head on discharge) and diameter of spigot is made by trial and error. Assume 4 ft. head. Then, from equation $Q = Av$ the spigot diameter must be 1 3/8 in. If a smaller spigot opening is desired, the tank must be made larger and *vice versa*. The slope of the tank bottom should be at least 1 1/2 in. per ft. and this slope, with the depth above the first spigot fixed, fixes the depth above the other spigots. From this depth the diameters of the other spigots may be computed.

13. CENTRIFUGAL CLASSIFICATION

Centrifugal classifiers are apparatus in which the sedimentation forces acting on particles in the classifying pool are increased far above gravitational magnitude, to the extent of 1,000 times gravity, if desired. This is done by rotating the classifying tank at high speed around an axis perpendicular to the general direction of sedimentation. As a result of the increased forces acting, smaller particles can be settled (*i.e.*, a finer size split made), and size separation can be effected in denser pulps than is possible in anything like comparative times by gravity.

Bird centrifugal classifier (Fig. 44) is the best known of present-day (1943) machines. Essentially it is a spiral classifier (Art. 3) with centrifugal force substituted for gravity.

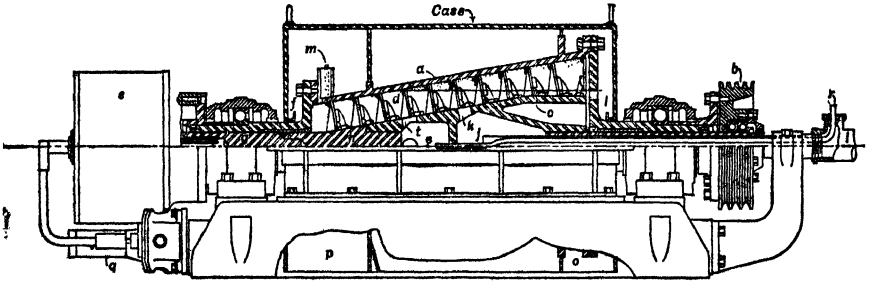

FIG. 44. Bird centrifugal classifier.

The tank comprises the truncated conical shell *a* which is revolved at the desired speed by drive sheave *b*. Any section on *a* through its axis is, then, the equivalent of a section perpendicular to the bottom of the ordinary slant-bottom tank of a mechanical classifier. Member c, carrying a spiral ribbon *d*, revolves independently of *a*, in the same direction, but at a somewhat lower speed; it is driven by a planetary-gear mechanism in housing *e*, which is attached to head *f* of the bowl, and drives a gear on internal shaft *g*; this shaft is splined to hollow spiral shaft *h*. The gear ratios *R* range from about 15 : 1 to 120 : 1; the differential speed, *i.e.*, the relative rotation *S* of the spiral is given by the equation $S =$

B/R, where B = r.p.m. of bowl. Feed is introduced through pipe i, which passes through the feed-end trunnion and discharges at j into the interior of the hollow spiral shaft; it passes thence into the bowl through ports k. Fine material in suspension (OVERFLOW) discharges through ports l in the head-end plate (corresponding to the overflow weir of the usual mechanical classifier); these ports are adjustable as to distance of discharge lip from bowl periphery, so that the depth of the pool and, consequently, pool area are variable through considerable limits. The range of adjustment in pool volume is about 4 times minimum volume. Settled material is scraped upslope (toward the small end) by the spiral, and discharges into the housing as indicated, and thence flows out through spout p. Overflow discharges through spout o. Overfeeding is guarded against by a device which transmits pressure from the gear driving the spiral to a torque rod acting against a diaphragm which, in turn, electrically actuates a valve on the feed line, and reduces or cuts off the feed entirely when the pressure (overfeed) exceeds a predetermined limit. The externals of this mechanism are shown at q. Wash water may, if desired, be introduced at r, and flow thence into compartment s and through ports t.

Operation. The same rules hold as hold for slow-speed mechanical classifiers (Art. 6). Agitation increases with the differential speed of the spiral and its pitch (which varies from 2 to 18 in.). The minimum size thrown down depends upon the centrifugal force exerted (which varies as the square of the speed), the area of the pool, the volume of liquid discharging, and the pulp density. It is possible to discharge the sand with very low moisture content (20% on relatively granular ore) on account of the high centrifugal pull on the water against the sloping surface of the bowl "above" the pool level. A variable-speed motor is usually provided, thus making this drying force, as well as the sedimentation pull against the suspending forces, operating variables. Slope of the sides of the bowls varies with the work to be done; usual slope is 10°, range is 7 to 15°.

Table 41. Sizes and relative capacities of Bird centrifugal classifiers

Size, in.	Capacity, t.p.h. of solid	Motor, hp.
18×28	2 to 3	10
24×38	5 to 6	20
36×50	8 to 10	30
36×72	15 to 20	50
54×70	30 to 60	100

Considerable mechanical dispersion of flocculated material is effected by the liquid shear which is brought into play when the feed stream falling from the stationary feed pipe falls onto the inner surface of the hollow spiral shaft, and also when the streams emerging from the ports in this shaft meet the liquid surface of the pool. Insofar as this does away with the necessity for chemical dispersants it constitutes an operating economy, and in cases where purity of products is desirable, it eliminates one source of impurity.

Capacity depends primarily upon specific gravity of solid, separating size and pulp density. Relative capacities of machines of different sizes (large-end diameters by axial length of bowl) are given in Table 41.

Performances. Data furnished by the Bird Machine Co. (*PC*) are given in Table 42.

Table 42. Performances of Bird centrifugal classifiers

Operation	Desliming feed to flotation cells	15-micron classification on thickened feed	100-m. classification on ball-mill slurry
Size, in.	36×50	18×28	54×70
Speed, r.p.m.	800	1,005	400
Centrifugal force, times-gravity	321	240	121
Gear ratio	80 : 1	36 : 1	40 : 1
Differential r.p.m. of spiral	10	27.6	10
Bowl volume, gal.	25	3	105
Beach length, in.	18	12	24
Conveyor pitch, in.	12	5	9
Sp. gr. of solids [a]	4.2	2.5	2.7
Temp. of feed, deg. F.	75	80	110
Feed, g.p.m.	95	45	340
Per cent. solids: Feed	35	51.3	60
Cake	87	69.5	80
Effluent	2.1	24.6	56
Feed solids in cake, %	97.1	80.6	23
Capacity, tons solids per hr.	10.5	8.25	78
Mesh of separation		15μ	

[a] Liquor is water in all three cases.

Use. The centrifugal classifier has passed the experimental stage both mechanically and as a tool or making size separations at sizes below those economically possible with the usual gravity sand-slime separators, or at pulp densities higher than can be treated in gravity classifiers (see Table 42). Its capacity is high in relation to floor space and weight, and power consumption is not excessive. Separation at 1 or 2μ is asserted to be possible in feed pulps containing 20 to 25% solids. It is now being used in cement-blending to separate a high-silica product from the differentially more finely ground lime and shale; it should be useful in separating scuffed fines from attrition-cleaned feeds in nonmetallic flotation, since it will separate at finer sizes than the usual plant deslimers and thus reduce the weight percentage discarded; it would also skim out the small percentage of truly colloidal fines which represent the real trouble makers in the primary slimes in sulphide flotation, etc.

14. DENSITY CONTROL

Since the size of overflow product of mechanical deslimers operating under otherwise relatively constant conditions is determined by the density of the overflow pulp (Art. 6), it follows that maintenance of constant overflow density is a means of maintaining constant size of product.

Methods of density control are either indicating, with change in water supply made by the operator according to the indication, or automatic.

Indicating methods, which are usual, are based on measurements of either the specific gravity, or of the internal pressure of the overflowing pulp.

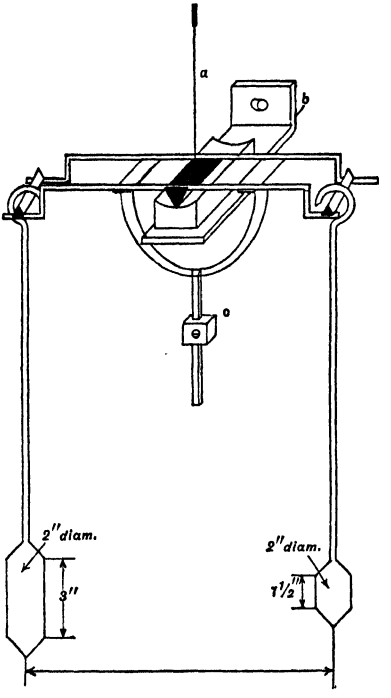

FIG. 45. Morris density indicator.

Specific gravity is usually measured by filling a tared container to overflow and weighing. Density is then read from a chart or table, or, with less likelihood of operator error, a spring balance is used, the scale being graduated to read pulp density directly, tare having been compensated.

Pressure methods ordinarily comprise the use of a HYDROMETER floating in the pool near the overflow lip or, less accurately, of a MANOMETER consisting of of a vertical open-ended glass tube, with the lower end submerged a few inches in the pulp near the overflow weir.

A somewhat more elaborate apparatus (Fig. 45), devised by T. M. Morris at ANACONDA (*PC*), consists of a BEAM BALANCE, with buoys of unequal volume suspended from the arms and submerged in the classifier pool. The difference in upward thrust of the pulp on the arms is equal to the weight of a volume of pulp equal to the difference in volume of the two buoys. Since this volume difference is constant, the difference in thrust is proportional to the pulp density. Pointer *a* reads on a scale calibrated by direct specific-gravity measurements. Fulcrum support *b* is fastened by bolt to a slotted strap which is, in turn, fastened to the wall of the classifier tank in such position that vertical adjustment of the balance is possible. Change of position of sliding weight *c* changes sensitivity. The mechanism is protected from splash by enclosure in a light metal box with holes for the arms and sensitivity leg, and a window for observing the pointer. A shield is placed around the submerged cylinders to prevent sidewise impulse due to swash. At ANACONDA the apparatus is reported to check with the density can within 1 or 2%. Difficulty is to be expected with pulps containing much wood, waste, or dissolved salts that tend to precipitate; frequent inspection and cleaning of submerged parts would then become necessary.

Adams automatic density controller comprises a device for utilizing differences in pressure within the pulp, induced by varying solid percentages, to actuate a motor-controlled feed-water valve. The essential elements of the apparatus are shown in Fig. 46. Pipes *l* and *s*, of unequal length, open at both ends, are mounted on the bottom of box *a*, which is divided into two chambers by the wall *b*. The assembly is fastened to the structure of the classifier in such position that the pipes extend into the pulp as indicated, with h_s about 1/2 in. Air under pressure sufficient to more than overcome head h_l is introduced continuously through pipe *c* and flows into pipes *l* and *s* through orifices *d* and *e* respectively, one being of fixed and the other of variable area as indicated, so that differential orifice resistance may be utilized to regulate the respective pressure drops. By adjustment of orifice *d* by means of handle *f*, pressures in the two down-pipes are adjusted until rise of bubbles from both pipes indicates that the pulp levels in the pipes have been pushed down to their bottom ends. Pipes *g* lead to chambers fitted with flexible diaphragms bearing against the arms of a beam balance, one arm of which is counter-

weighted so that the beam pointer may be brought to center when the pulp columns are at the bottoms of the down-pipes at the pulp density that it is desired to maintain. The supply of air on line c is regulated so that a small flow of excess air is maintained through petcock h when this is partially open; this permits some regulation at the bell of the amount of bubbling.

The hydrostatic balance is given by the equation $h_l = h_s\rho + 3\,1/2\rho$, where ρ = density of pulp. The pressure difference, $\rho(h_l - h_s) = 3\,1/2\rho$, is not changed by changing the submergence, since this simply adds a constant K to both h_l and h_s. Thus $(h_l + K)\rho = (h_s + K)\rho + 3\,1/2\rho$, or $\rho(h_l + K - h_s - K) = 3\,1/2\rho = \rho(h_l - h_s)$. But the pressure difference is, of course, affected by change in the value of ρ. Any such change is immediately transmitted through pipes g to the diaphragm balance, and the scale pointer swings as an indication. At the same time a separate arm swings to close the circuit on a reversing motor actuating a feed-water valve, the direction of swing determining the direction of rotation. This motor circuit is equipped with a timing mechanism which breaks the valve-motor circuit independently, thus insuring slow change in water supply, and minimizing swinging.

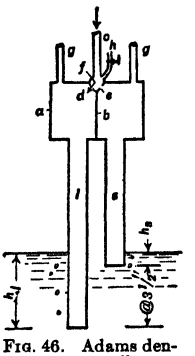

FIG. 46. Adams density controller.

Performance. The manufacturers (Mine & Smelter Supply Co.) assert that at an AFRICAN copper mill one of the units, when checked by specific gravity samples, showed 114 out of 142 samples within 1% of the set overflow density and 26 within 2%. They cite also another operation in which, with a set density of 30% solids, half-hourly samples throughout a shift showed 11 out of 16 samples at 30%, 4 at ± 1%, and 1 at +2%, with a new-feed tonnage range on the closed circuit of 518 to 710 t.p.d.

SECTION 9

AIR SIZING AND DUST COLLECTION

BY

HARLOWE HARDINGE

AND

T. A. FRANKISH, HARDINGE CO.

ART.		PAGE
1.	Principles	01
	DUST COLLECTION	
2.	Principles	05
3.	Gravitational separation	05
4.	Inertial separation	07
5.	Air (gas) filters	14
6.	Spray washers	16
7.	Electrical dust precipitation	17
8.	Design of dust-collecting system	18
9.	Dust-collecting installations	26
10.	Low-pressure conveying	29
	AIR SIZING	
11.	Introduction	29
12.	Commercial classifiers	32

1. PRINCIPLES

Air sizing and dust collection deal with different facets of the relative motions between the components of mixtures of solids and gases just as water classification, dewatering, thickening, and filtration deal with similar relative motions between solids and liquids. The same fundamental laws apply in both cases; such differences in phenomena as exist flow from differences in density and viscosity of the fluid media.

Definitions. DUST COLLECTION, as used herein, describes generally an operation in which all or substantially all of the solid admixed with a body of gas is separated from it. AIR SIZING is an operation in which separation is effected between particles of different sizes suspended in a gas stream. This separation is made by causing the larger particles to leave the stream in some particular region, whereas the smaller particles travel on. DUST is very fine solid, so slow-settling in a gas that it remains suspended when the movement of the gas as a whole is very small.

Laws of particle movements in gases

The differential movements of solid particles with respect to each other and to the gas with which they are admixed depend upon a number of factors, *viz.*, (*a*) the size, size distribution, shape, specific gravity, moisture content, and degree of dispersion of the particles; (*b*) the velocity, direction of flow, pressure, density, viscosity, temperature, and humidity of the gas; and (*c*) the shape, size, and surface character of the container.

Martin's analogy. Martin (*26 CerS 21*) points out an interesting but not practically useful analogy between liquids and mixtures of fine solids and gases. Such mixtures flow through pipes with little or no segregation; the surface ripples when the mass is suitably agitated; passage of a gas stream through a mass of homogeneous powder produces an effect analogous to distillation, in that a gas rising through the mass at constant velocity carries powder away from the surface at a constant rate (analogous to evaporation), a given volume of gas leaving per unit of surface area per unit of time carries always the same weight of solid (*i.e.*, is saturated), the weight carried increases with the velocity of the stream (analogous to the temperature effect at constant pressure), and beyond a given critical velocity the mass rises as a whole (boiling point).

Settling velocities of solids settling without interparticle collisions (FREE-SETTLING) in gases are approximated throughout the range of particle size and gas velocities by the ALLEN EQUATION (*1 Phil. Mag. 323*).

$$R = Ka^n p u^{2-n} V^n \qquad (1)$$

where R = resistance of the fluid to motion of the solid; K is a constant having, however, different values for particles of different shapes and for different relative velocities of

particle and fluid; a = radius of a spherical particle, n has a value dependent upon the value of V, p is the density of the gas; u is its kinematic viscosity = b/p where b = absolute viscosity; and V = relative velocity of particle and gas.

When V is very small, streamline motion occurs, $n = 1$, and Eq. 1 takes the form proposed by STOKES (Sec. 8, Art. 1), *viz.*

$$R = KabV \tag{2}$$

When V is great, the gas becomes turbulent in the region of the particle, $n = 2$, and Eq. 1 takes the form given by NEWTON (Sec. 8, Art. 1)

$$R = Ka^2pV^2 \tag{3}$$

Graphs of these relationships on the same co-ordinates cross, and neither equation holds near the point of intersection. Many equations have been proposed for the intermediate region. That given by Allen is obtained by setting $n = 3/2$, whence,

$$R = Ku^{\frac{1}{2}}a^{\frac{3}{2}}pV^{\frac{3}{2}} \tag{4}$$

A particle falling from rest in a body of gas at rest rapidly reaches a constant velocity (TERMINAL VELOCITY), at which, of course, the gravitational pull is just equal to the resistance offered by the gas. From this relationship (G = weight of particle = gravitational pull thereon = R), since

$$G = v(S - p)g \tag{5}$$

where v = volume of particle, S = its specific gravity, and g is the gravitational constant, it follows, by substitution, that

$$V_T = K[(S - p)a/p]^{\frac{1}{2}} \tag{6}$$

$$V_S = K(S - p)a^2/up \tag{7}$$

$$V_I = K(S - p)^{\frac{2}{3}}a/u^{\frac{1}{3}}p^{\frac{2}{3}} \tag{8}$$

where V_T, V_S, and V_I are terminal velocities for turbulent, streamlined, and transition conditions respectively.

Approximate settling equations. Since the quantities $-p^xa^y$ obtained by multiplying out Eqs. 6, 7, and 8 are very small compared to S^xa^y, the equations are ordinarily written as in Fig. 6, where values of K for air at 70° F. and atmospheric pressure are given.

Values of K must be determined experimentally for the irregular fragments produced in comminution of solids. Martin (*loc. cit.*) obtained experimental values for crushed quartz

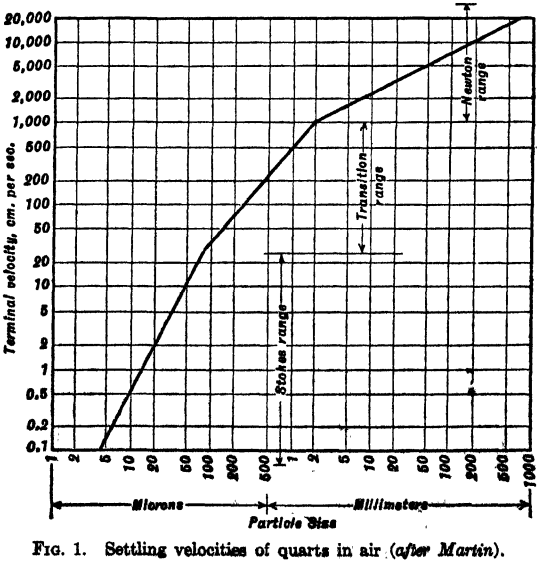

FIG. 1. Settling velocities of quartz in air (*after Martin*).

approximating the graph in Fig. 1, which substantially satisfy Eqs. 6, 7, and 8 in the following forms:

$$V_T = 71\sqrt{a(S - p)/p} \quad (9)$$

$$V_S = 143a^2(S - p)/b \quad (10)$$

$$V_I = 200\bar{a}\left(\frac{S - p}{p}\right)\left(\frac{a}{u} - 10.5\right) \quad (11)$$

in which

$$\bar{a} = \sqrt[3]{\frac{9b^2}{2gp(S - p)}} \quad (12)$$

and is the radius of the largest spherical particle that obeys Stokes' law. For crushed quartz the value $\bar{a}$ may be taken as 50 μ.

Lower limit of Stokes' law is reached when particles approach a size near that of the mean free path of gas molecules, and therefore are subject to less than the normal number of collisions. Gibbs (*Clouds and Smokes, Blakiston, Phila., 1924*) states that for particles smaller than 0.1-μ the CUNNINGHAM CORRECTION should be applied and

$$V_C = V_S(1 + K'\lambda/a) \quad (13)$$

where V_C is the corrected velocity, $K' = 0.86$, and λ = length of mean free path of gas molecules.

Settling velocities of particles in still air are shown in Table 1.

Table 1. Settling velocities in still air

Size of particle, μ	Rate of fall, f.p.m.		
	Spheres, sp. gr. = 1.0, temp. 70° F. *a*	Irregular grains, sp. gr. = 2.5 *b*	Spheres sp. gr. = 3.0
5,000	1,750	3,140	.....
1,000	790	.....	.....
500	555	470	.....
100	59.2	.....	180
74	.....	.....	96
50	14.8	24	33
25	.....	.....	10
10	0.592	.....	1.8
5	0.148	0.24	.....
1	5 *c*	.....	0.018
0.5	1.4 *c*	0.0032	.....
0.1	0.05 *c*	.....	.....
0.05	.....	0.00011	.....

a After Alden (*Design of Industrial Exhaust System*, Industrial Press, 1939).

b After Miller (45 *CME* 132).

c Inches per hour.

Gas velocities for solid transport with low concentrations of solid were determined by Dallavalle (*4 #9 HPAC 9/32*). His results for horizontal and vertical ducts respectively are given in Fig. 2. The data substantially satisfy Eqs. 14 and 15.

$$V_H = 6{,}000SD^{0.398}/(S + 1) \quad (14)$$

$$V_V = 13{,}300SD^{0.570}/(S + 1) \quad (15)$$

where V_H and V_V are velocities in f.p.m. in horizontal and vertical ducts respectively and D is particle diameter in inches. Fly ash, 1- to 10-μ, had a marked tendency to cling to the bottom of the horizontal duct and build up, whereupon velocities much higher than the minima were required to keep the duct clean.

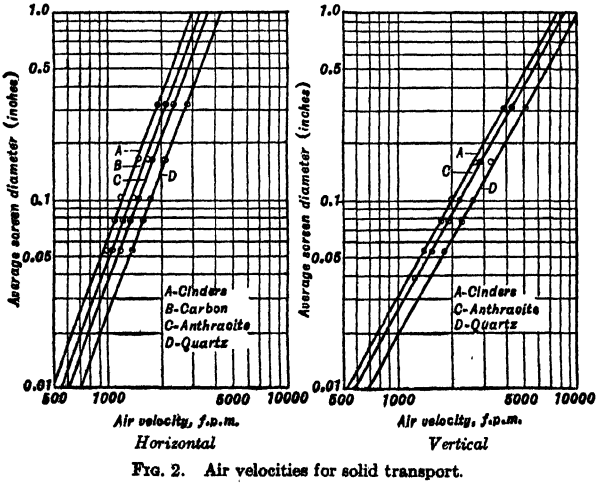

FIG. 2. Air velocities for solid transport.

Energy loss in pneumatic conveying. Dallavalle (*4 #11 HV*) states this to be similar to the loss in hydraulic conveying, if the concentration of material conveyed is not very

great, say 100 gr. per cu. ft. At higher concentrations, the resistance to flow increases owing to constriction and to roughness of particle surfaces. A fair estimate of the drop is possible by assuming the density of the fluid to be that of the air plus the material suspended. In elbows and transitions where the nature of the particle flow cannot be determined, it is best to allow for resistances twice as great as those for air alone.

Velocity for mixing. Davis (*140 E 1*) gives Eq. 16 defining the gas velocity V_0 (f.p.s.) at which a powder of a given specific gravity and diameter (in.) starts mixing with the stream in a horizontal pipe.

$$V_0 = 54\sqrt{DS} \qquad (16)$$

Fig. 3 defines the relation between velocity (V_M) of gas stream and the volume of gas per lb. of different powders (0.005-in. diam. spheres) in an equilibrium (saturation) mixture flowing in a horizontal duct. Davis warns that in design a factor of safety to insure against sedimentation should be applied to V_M values from the chart, owing to nonuniformity of velocity and to dispersion occurring at points of change of direction of flow (centrifugal separation) and to variation in particle size, shape, and feed rate. He suggests a multiplier of at least 1.5 applied to the chart value.

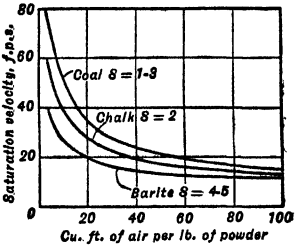

FIG. 3. Velocity *vs.* solid load in horizontal ducts.

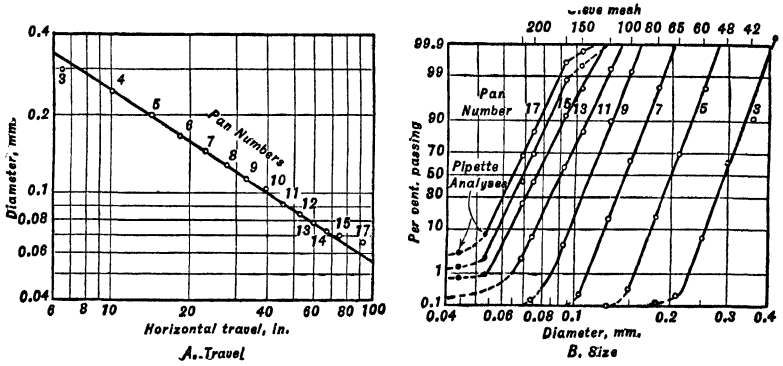

FIG. 4. Falling velocities in horizontal gas streams.

Effect of a horizontal gas stream on a falling powder. Otto and Rouse (*9 #7 CvE 414*) dropped quartz powder vertically through a slot in the top of a horizontal rectangular duct through which a gas stream was flowing and caught the settled grains at points along the bottom variously distant from the feed point. The duct was 27 in. wide and 30 in. deep. Horizontal distances traveled *vs.* grain size are given in Fig. 4, item *A;* size distribution is indicated in item *B*.

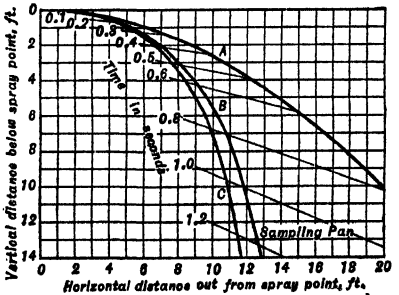

FIG. 5. Trajectories of powders in still air.

The material from each pan tested had a distribution essentially in accord with the normal-error law (straight line on a log plot), except for a small percentage of dust; hence the median and the geometric mean diameters for each size coincide at the 50% line. A vertical line on item *B* would represent perfect sorting; hence the deviation of each curve from the vertical is a measure of the size dispersion about the geometric mean. Otto attributes the decrease in slopes with increasing distance from the point of feed to increase in turbulence along the tunnel of the smaller particles, and to the more angular shape. The straight line of item *A*, the ordinates of which are the 50% points of the curves of item *B*, is evidence of the smooth progression in size secured by this method of classification.

Trajectory of powders in still air was investigated by Lapple and Shepherd (*32 IEC 605*). The solid particles having a density of 115 lb. per cu. ft. were projected (sprayed) horizontally at 25 f.p.s. initial velocity into an air-filled chamber ($p = 0.067$ lb. per cu. ft.). A sample was caught in a 15-in. pan at the location indicated in Fig. 5. Screen analysis

was 0% >14-m., 70% 14~20-m., 30% 20~28-m., 0% <28-m. This is reasonably close to the expectation from the theoretical trajectories plotted.

DUST COLLECTION

2. PRINCIPLES

Dust collection is removal of dust from gas. The usual purposes are one or more of the following: (*a*) To improve working conditions, (*b*) to prevent travel of dust to surrounding territories, (*c*) to prevent dust from re-entering the working atmosphere of a machine or process, (*d*) to permit recirculation of clean gas, (*e*) to save valuable material, (*f*) to decrease building maintenance and wear of plant equipment. The extent of collection necessary depends largely upon local conditions and the nature of the dust. Many types of collectors are in common use, each with different limitations and a characteristic efficiency range. Among the factors influencing selection of equipment and determining its adaptability to a given problem are: (*a*) The properties and characteristics of the dust, (*b*) the quantity to be collected per unit of time, (*c*) the temperature of the conveying gas and of the dust itself, (*d*) the moisture content, (*e*) location of the collector, (*f*) continuity of the operation. The measure of efficiency of a collector is the dust content of the discharged gas rather than the amount of material collected.

Size of dusts encountered in the industrial field varies widely. Most collecting problems deal with sizes in the range from 50-μ to 1-μ. The weight percentage of dusts in the colloidal range is small. Table 2 gives sizes of dusts met with in ordinary milling operations. Fig. 6 gives a basis for relating these to other fine gas suspensions.

Table 2. Approximate median sizes of air-borne dusts

Kind of dust	Median size, μ
Atmospheric dust	0.5
Sand blasting	1.4
Granite cutting	1.4
Trap-rock milling:	
Crusher house	1.4
Screen house	1.3
Disk crusher	0.9
Foundry parting compound	1.4
General foundry air	1.2
Talc milling	1.5
Slate milling	1.7
Marble cutting	1.5
Soapstone	2.4
Aluminum dust	2.2
Bronze dust	1.5
Anthracite mining:	
Breaker air	1.0
Mine air	0.9
Coal drilling	1.0
Coal loading	0.8
Rock drilling	1.0

Types of dust-collectors. Commercial dust-collecting equipment comprises five distinct types, classification being based on the physical principle involved in separation. (*1*) Gravitational collectors, typified by settling chambers; (*2*) inertial separators, of which baffle chambers and centrifugal separators are representative; (*3*) filters, the bag collector being the best known; (*4*) spray-type, represented by scrubbing towers; (*5*) electrical, of which the Cottrell precipitator is the form most used. The sizes of dusts to which the various types are usually applied are given in Table 3.

Table 3. Approximate minimum particle sizes settled in commercial dust collectors

Separator type	Minimum particle size, microns
Gravity	200
Inertial deflectors	50 to 150
Centrifugal:	
Large cyclone	30 to 60
Small cyclone	5 to 30
Mechanical	5 to 30
Washers and scrubbers	0.01 to 30
Filter	0.1 to 0.5
Electrical	0.001 to 1.0

3. GRAVITATIONAL SEPARATION

The simplest and most economical means of removing dust from gas is to reduce the velocity of the carrying stream, whereupon relatively coarse particles can be dropped out in a chamber of reasonable volume. Baffles and deflector plates are sometimes used to aid separation. The principal use of the settling chamber is to rough out the coarser particles and thus reduce dust load in subsequent more effective equipment.

Design of a settling chamber. The average settling rate of the material to be collected should be determined by experiment. An alternative would be to size the dust by screen or other suitable method and calculate settling rate by Stokes' equation, in the form and

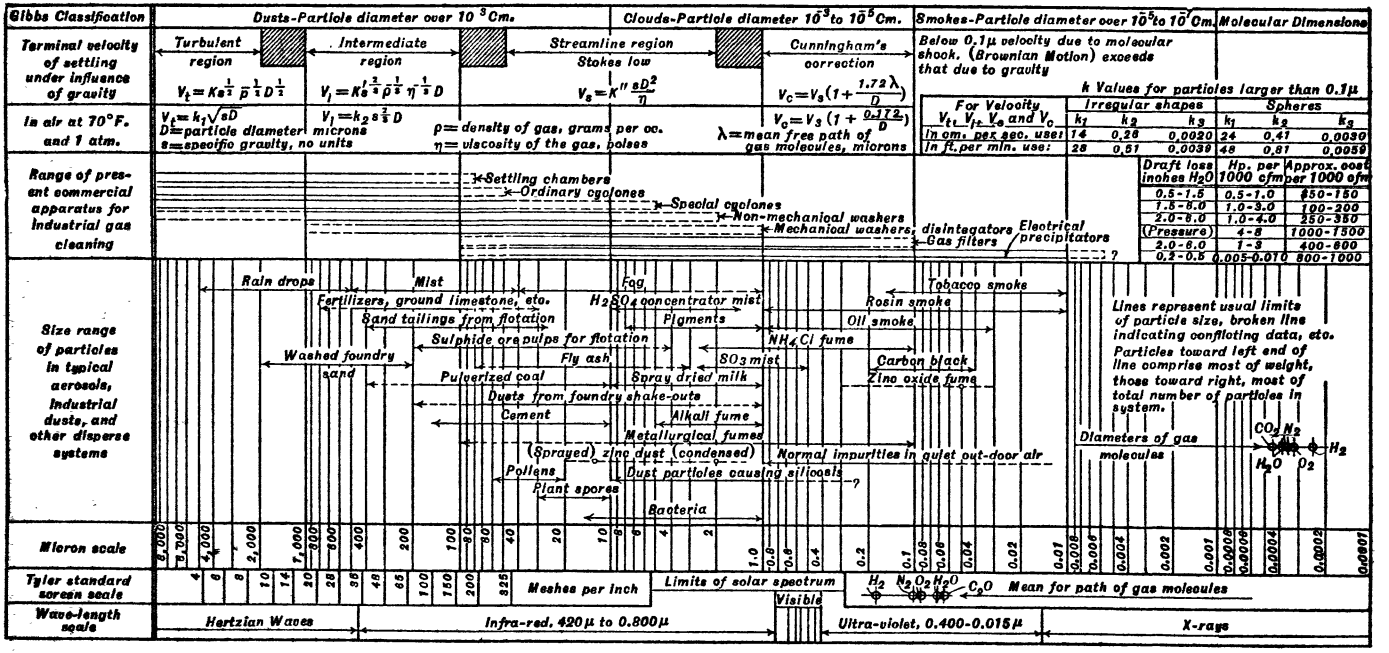

FIG. 6. Data on gaseous suspensions.

with the constants of Fig. 6. A safety factor (EDDY FACTOR) of 0.5 should be applied to a settling rate determined by either method to allow for turbulence at an air velocity of 60 f.p.m.

A common form of chamber (Fig. 7, item *a*) consists simply of an enlargement in the gas duct, sufficient to lower the velocity to the desired extent, usually with one or more baffles, to add inertial effect (Art. 4), and a hoppered bottom for drawoff.

Air velocity through a gravity chamber should be in the range of 4 to 120 f.p.m. for best separation, but cost and available space seldom permit air speeds less than 300 f.p.m. and even this value may be impracticable because of chamber size. Necessary retention period $t_R = h/V_S$ where V_S = terminal velocity of the smallest particle to be removed. Similarly $t_R = hwl/Q$ where w = width and l = length of settling chamber, whence $wl = Q/V_S$. Horizontal velocity of the air through the chamber, $V_H = Q/hw$; whence $h/l = V_S/V_H$.

Pressure drop through the collector depends upon the transitions at entry and outlet. If the collector is a simple rectangular box, the loss may be as much as 1.5 times the velocity head in the inlet pipe; if the pipe leads to the box with a diverging connection, and a conical outlet is used, loss may be reduced to 0.75 times inlet velocity head.

The ratio h/w selected is determined by space limitations, entry design, and the decision on the importance of maintaining uniform flow across transverse area of the chamber.

Example. Assume the specific gravity of the solid = 3.0 and particles down to 74-μ are to be removed. The quantity of air is 1,200 c.f.m. TRIAL 1. Try $V_H = 60$ f.p.m. V_S for 74-μ particles is 96 f.p.m. (Table 1.) Then $h/l = 0.5V_S/V_H$ (allowing an eddy factor of 0.5) = $0.5(96/60) = 0.82$. Transverse area $A_T = 12{,}000/60 = 200$ sq. ft. $h/w = 1/2$ is a good proportion. Then $h = 10$ ft.; $w = 20$ ft.; $l = 60$ ft.

4. INERTIAL SEPARATION

Baffle-type collector. Essentially this is a settling chamber (Fig. 7), fitted with baffles or deflectors, or otherwise so conformed that it effects velocity reduction and a centrifugal action caused by change in air direction, which serves to throw dust into isolated or dead-air pockets. The collector is available with baffles or deflectors of various design or shape, so arranged and spaced as to form a tortuous passage through the unit. It is principally applicable to the removal of the coarser particles in high-temperature installations, since the design lends itself to all-metal construction. It is frequently provided with an auxiliary water-spray compartment to improve the over-all separating efficiency.

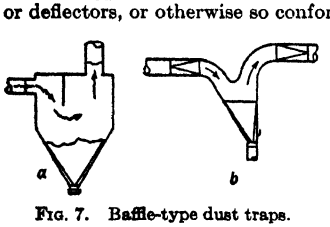

FIG. 7. Baffle-type dust traps.

Venturi dust trap (Fig. 8) consists of a series of Venturi-shaped passages *a* through which the dust-laden gas passes horizontally. The walls of the passages are formed by diamond-shaped ducts *b* which extend from the bottom of the main duct or casing *c* to within a short distance of the top. At the top of each vertical duct or trap *b* there is a small opening *d* into a by-pass area *e* at the top of the main duct. The velocity of the gas increases as it approaches the throat of the Venturi passages, and the momentum of the dust particles causes them to concentrate along the conveying walls. The concentrate passes through narrow slots *f* in the vertical walls of traps *b* and most of the solid drops into the hopper *g*, while the gas passes out at the top through the slots *d*. The traps are arranged in a series of 6, 9, or 12 rows. Dampers *h* control by-pass. The Venturi principle is said to aid in keeping down the resistance; hence the arrangement is suitable for installations having limited draft facilities.

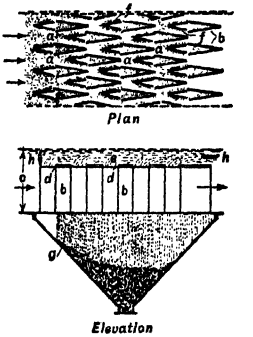

FIG. 8. Venturi dust trap.

Centrifugal collectors

The centrifugal, or CYCLONE, collector is widely used. It accomplishes dust removal through combined velocity reduction and the action of centrifugal forces and is effective principally on coarser particles. Many designs are available with widely different external dimensions and proportions, and internal devices. Modern designs of high-speed and multiple cyclones increase the extent of separation by developing high centrifugal forces and high resistance or pressure drop.

Cyclone design is based on the principle of the vortex. Dust-laden gas enters tangentially near the top and is forced down in an ever-decreasing spiral to the dust-outlet trap. Dust particles are precipitated at the periphery, the separating effect increasing as the apex of the cone is approached. Clean gas forms a vortex in the center and travels upward into the cleaned-air outlet. The dust swirls down into the apex of the cone, or in some cases into a small collection chamber, and is released at the bottom. The outlet for material must be sealed by rotary valves or air locks.* Air flow is shown diagrammatically in Fig. 9.

Cyclones are classified as of high and of low efficiency. The former are tubes ranging from 24- to 4-in. diameter. Low-efficiency cyclones seldom show higher than 70% collection from dust <100-m.; they have proved satisfactory for larger particle sizes. They are sometimes used in series, but over-all efficiency, power consumption, and initial cost usually do not justify such a design as compared with a single-pass collector.

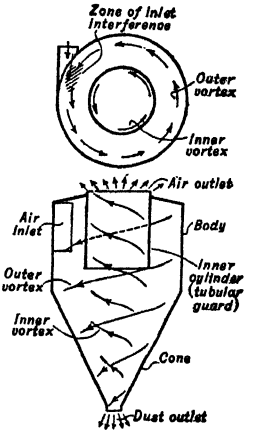

FIG. 9. Diagram of air flow in a cyclone collector.

ADVANTAGES of low-efficiency cyclones are that (*a*) standard designs are not covered by patents; (*b*) they are cheap to construct; (*c*) wear from abrasion is usually low because of the low velocity, and light-gage metals can be employed in the construction, (*d*) pressure drop through the collector is relatively small, being in the range of 1.5-in. water gage; (*e*) power consumption is less than for high-velocity cyclones or cloth filters, (*f*) the machine can be used for many dusts, particularly those of high specific gravity and <200-m. Most industrial dusts, however, contain too great a percentage of fine particles to be handled satisfactorily by this type of apparatus alone. DISADVANTAGES: Where there is a silicosis hazard, the low-efficiency collector does not remove enough dust. If the recovered dust has value, more complete collection is justified. The extremely fine sizes discharge as a cloud, if any appreciable amount is present.

Separation coefficient (CENTRIFUGAL COEFFICIENT) C_G of a centrifugal machine is defined as the ratio F/G, where F is the centrifugal force acting on a particle, $= GV_p^2/gr$ where G = weight of particle, lb., V_p = tangential velocity, f.p.s., g = gravitational acceleration, ft. per sec.^{2}, r = radius of rotation, ft., and F is in lb. Then

$$C_G = -(V_p^2/gr) \qquad (17)$$

Separation coefficient of a gravity chamber is 1.0. The magnitude of the centrifugal effect and its variation with diameter of gas path and gas velocity are indicated by Table 4.

Table 4. Centrifugal coefficients in rotary gas streams

Diameter of gas path, ft.	Centrifugal coefficient (gravity = 1)	
	Peripheral velocity, 40 f.p.s.	Peripheral velocity, 80 f.p.s.
20	5	20
5	20	80
1	100	400
1/2	200	800
1/4	400	1,600

Resistance to separation is a function of the radial length of travel of the dust particle before reaching the the cyclone wall, the time during which centrifugal force acts upon the particle, and its gravitational settling rate. Large particles require less time or less angular travel before reaching the wall of a cyclone cylinder than do the smaller particles. These relationships, translated into cyclone sizes and gas velocities, are shown in Table 5. A high-velocity small-diameter cyclone with relatively large depth is, therefore, most effective for fine particles. Such cyclones clean air most effectively but have low volume capacity and cause high pressure drops. They are usually arranged in parallel to make up capacity.

Large cyclones, the diameter of which is 3 to 6 times the inlet-pipe diameter, have large air capacities. Various designs of low-resistance types are available. The TANGENTIAL-ENTRY TYPE, with the deflector arranged to avoid pinching off entry of air by the whirl, is common; this design obviates excessive back pressure. The HELICAL-ROOF TYPE serves the same purpose by deflecting the outer vortex downward. The usual form has vanes for deflecting air into the outlet whorl.

Resistance of well-designed collectors should range between 1.0 and 0.5 velocity heads. It depends to some extent on the size. For very small diameters, pressure drop over the collector may exceed 3-in. water gage.

Table 5. Relative minimum tangential gas velocities necessary to separate various dusts in cyclonic collectors

Particle size, microns	Diameter of collector, ft.					
	0.5	1.0	2.0	4.0	6.0	12.0
	Relative minimum velocity, f.p.s.					
100	.....	.....	0.8	1.6	2.4	4.8
50	0.8	1.7	3.2	6	10	20
20	5	10	20	40	60	120
10	20	40	80	160	240	480
5	80	160	320	640	960	2,000

Nature of cyclonic flow. The centrifugal force to which dust particles are subjected during their spiral travel around the axis of a cyclone imparts a radial separating velocity. Resistance to movement of the particle through the gas was given by Stokes as $6\pi baV$ (see Eq. 2) for a sphere moving under streamline conditions. At any point where fluid resistance is equal to the centrifugal force, $6\pi baV_S = \frac{4}{3}\pi a^3(S - p)V_p^2/gr$ (see Eq. 17), whence

$$V_S = \tfrac{2}{9}a^2(S - p)V_p^2/bgr \qquad (18)$$

Formulas for cyclonic collectors

Gas volume throughput. Eq. 19 by Lissman (*37 CME 630*) is for cyclones the length of which, below the bottom of the gas inlet, is not less than approximately one diameter d, and for which the ratio e/d^2 lies between $1/4$ and $3/4$ and the ratio A/d^2 lies between $1/8$ and $1/2$.

$$Q/d^2 = Ke/d \cdot A/d^2 \cdot \sqrt{HT/Pp_a} \qquad (19)$$

where Q = gas volume throughput, H = draft loss through collector, T = temperature of gas, absolute, P = gas pressure at inlet, p_a = specific gravity of gas with respect to air, d = diameter of cyclone (cylindrical), e = diameter of gas outlet, A = area of gas inlet, K = a numerical constant, the magnitude of which depends upon the units.

For a given cyclonic collector: $Q = K_1\sqrt{HT/PD}$ where K_1 is a numerical constant, different from K, Eq. 19, since it contains the terms K, e, d, A.

Separating velocity. Anderson (*16 AIChE 69*) and Shepherd and Lapple (*32 IEC 605*) give the following modified form of Eq. 18, disregarding gas density p.

$$V_S = D^2\theta^2Sr/Kb \qquad (20)$$

where θ = angular velocity of gas stream, r = radius of curvature of gas stream, D = diameter of dust particle, S = density of dust particle, b = viscosity of gas, and K = a numerical constant. Stokes' law is assumed to hold.

Particle travel for a given distance of gas travel. The same authors (*ibid.*) evaluate radial particle travel in terms of rotary gas path as follows:

$$s = D^2lV_pS/Kb \qquad (21)$$

where s = length of radial travel of particle, and l = angular length of gas travel. Stokes' law is assumed to hold.

Minimum particle size collectible. Anderson (*loc. cit.*) and Rosin, Rammler, and Immelman (*76 ZvDI 443*) give the following equation:

$$D_{\text{min.}} = \sqrt{Kwb/lSV_p} \qquad (22)$$

where w = width of gas stream.

Efficiency of collection. No basis for estimating efficiency is standardized. Some manufacturers guarantee to recover a specified percentage of a given dust; others a specified percentage of all of a given dust coarser than a specified size. The difference in these two bases is apparent when they are applied to the materials of Table 6.

Table 6. Size distribution of two dusts

Micron sizes	Fly ash		Portland cement	
	Weight, %	Per cent. collected	Weight, %	Per cent. collected
>5.....	72	89	74	99+
>10.....	43	97+	64	95
>20.....	21	99	43	99+
Total solids....	100	80	100	83

A warranty to collect 20% of all dust would be a very much simpler problem in case of the cement, since it would involve

taking less than half of the >20-μ fraction, while it would mean taking 95% of that fraction of the fly ash. A warranty to take 90% of the >20-μ. fraction would mean recovery of only 18.9% of the total fly ash, but 38.7% of the cement.

Fractional-efficiency method (*Buell Eng. Co.*) bases the efficiency rating on the percentage of material which has a settling velocity in excess of some given value that is collected. Thus Fig. 10 gives curves representing the efficiencies thus calculated of a given collector on three dusts of different specific gravities; the efficiencies are the same for separations at 8.2-μ for dust *C* having a sp. gr. = 1.0, at 10-μ for dust *A* with a sp. gr. = 2, and at 14.1-μ for dust *B* with sp. gr. = 3.

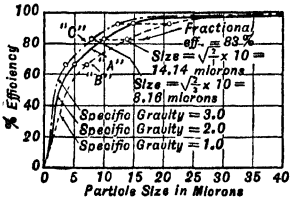

FIG. 10. Fractional efficiency.

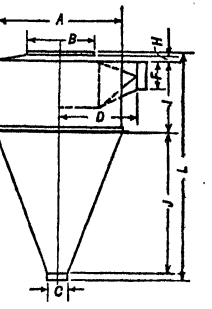

FIG. 11. Standard cyclone.

Standard cyclone dust collector is shown in Fig. 11. Table 7 gives the important dimensions and gas-volume capacities for selected sizes. The design seeks to overcome difficulties from moisture and the tendency of fine powdered material to pack, and yet effect maximum collecting efficiency possible with a simple, relatively compact design. This type of machine, modified if desirable to suit special conditions, is used generally to recover mineral dusts. It is the type most used when highest efficiencies are not required.

Table 7. General dimensions of cyclone collector, Fig. 11 (*after Hardinge Co.*)

A	B	C	D	F	H	I	J	L	Capacity CFM	Approx. weight (lb.)
3′ 0″	21″	8″	2′ 5″	8″	3″	21″	3′ 0″	5′ 5″	1,200	300
6′ 0″	3′ 2″	8″	3′ 9″	14″	6″	4′ 3″	5′ 9″	11′ 0″	3,700	1,300
8′ 0″	4′ 4″	8″	4′ 6″	20″	6″	5′ 8″	8′ 3″	15′ 1″	7,600	2,000
10′ 0″	5′ 8″	8″	6′ 6″	25″	10″	7′ 0″	10′ 3″	18′ 9″	12,000	3,500
14′ 0″	7′ 8″	8″	9′ 0″	36″	12″	9′ 8″	14′ 0″	25′ 5″	24,000	7,500
18′ 0″	9′ 8″	8″	11′ 9″	46″	16″	12′ 6″	18′ 0″	32′ 7″	40,000	16,000
20′ 0″	11′ 0″	8″	13′ 0″	50″	18″	14′ 0″	20′ 0″	36′ 3″	47,000	23,000

Van Tongeren cyclone (Fig 12) is designed to minimize re-entrainment of dust already precipitated on the outer wall, by providing an enlarged section, beginning at *a*, which serves to reduce the radial velocities in the ascending vortex, and by providing a shave-off outlet *b* in this zone where a heavy concentration of precipitated dust necessarily passes down toward the bottom outlet. The inlet is placed in the zone *c* where the upper and lower eddies meet, and where, therefore, the secondary flow component is definitely outward; the double eddy is thus encouraged and is claimed to assist separation. The eddy *d* occupies nearly the entire annular space between the concentric discharge duct *e* and the outer casing. A large portion of the dust separated by centrifugal action is carried upward and accumulates under the top plate. This also is shaved off through another port *b*. Both shave-offs connect via by-pass *f* with an inlet port *g*, which reintroduces the dust at a point where the wall currents have a downward direction; this aids gravity in producing flow to the discharge at *h*.

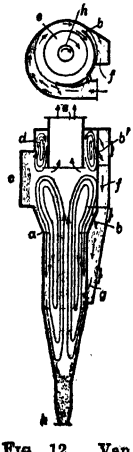

FIG. 12. Van Tongeren cyclone.

Test results by Buell Engineering Co. on a 36-in. (diam.) Van Tongeren collector are given in Table 8.

The net effect of installation of four of these collectors on kilns was a draft loss of 2 1/2- to 2 3/4-in. water gage.

Parallel arrangement of six cyclones is shown in Fig. 13. The inlets *a* lead from a common duct; the collectors discharge dust into a single bin, and clean gas flows into two branches of a common overhead duct.

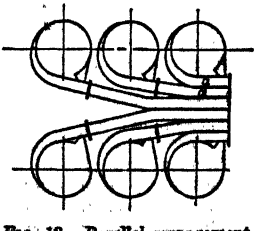

FIG. 13. Parallel arrangement of cyclones.

Table 8. Tests on a 36-in. Van Tongeren cyclone

Test No.	1	2
Duration of test, min	75	135
Barometer reading, in. of mercury	30.12	29.19
Volume of gas sampled at duct temperature and pressure, cu. ft. per hr. *a*	1,765	1,074
Dust sampled, gr. per hr	79	45.1
Dust loading of gas escaping from collectors, gr. per cu. ft	0.685	0.646
Average temperature in duct, °C	188	188
Average static pressure in duct, in. water gage	0.0677	0.0507
Gas velocity, f.p.m.	1,200	1,252
Gas volume, c.f.m.	27,500	29,750
Dust collection, lb. per hr	877.5	885
Dust-load reduction through collectors, gr. per cu. ft	3.72	3.47
Dust loading of gas entering collectors, gr. per cu. ft	4.40	4.12
Collection efficiency, %	84.4	84.2

a No condensate.

Multiclone collector (Fig. 14) comprises an assembly of cyclones of small diameter (item *A*). Dust-laden gas enters via duct *a*, under the sloping divider *b*, and is distributed to the tops of the individual tubes of the battery around gas outlets *c*. The downflowing stream is caused to whirl by vanes *d*. Precipitated dust collects in the common hopper *e;* more or less cleaned gas from the battery discharges into chamber *f* and leaves via duct *g*. In another form, the gas inlet to individual tubes is tangential or involute. The assembly may be made with the tubes horizontal. Tubes are ordinarily 6- or 9-in. diameter. Individual units are made as small as is consistent with cost, since, as is shown in Eq. 22, the size of the particle completely collectible is proportional to the square root of the width of the gas path (or radius of collector), and Eq. 19 shows that the gas-volume capacity is proportional to the square of the diameter. As is also evident from Eq. 22, the size of the minimum particle completely collectible is inversely proportional to the square root of the gas velocity. Since this velocity depends primarily on the pressure differential, *H*, across the collector, and since the smaller the particle collectible, the larger the proportion of all the particles carried by the gas that will be collected, the collection efficiency ordinarily increases with increasing pressure drop.

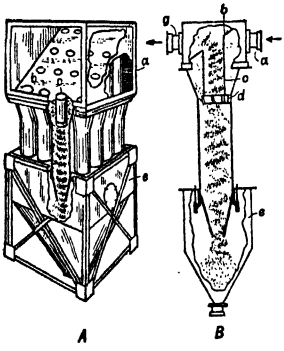

FIG. 14. Multiclone.

Performance data, furnished by the manufacturer, are given in Table 9. (See also Table 6.)

Table 9. Data on Multiclone installations (*from Western Precipitation Co.*)

Type of plant, or material treated	Gas vol., c.f.m.	Temp., °F.	Draft loss, in. H_2O	Type and size of unit	Collection efficiency, %
Cement dust (kiln)	200,000	250	2 to 3	6-9VB 48-6	90
Fly ash	72,500	126.5	2	6-9VA 30-5	85.6
Iron oxide and calcium carbonate	8,000	250	3	2-6IB-12	99
Lime-kiln dust	4,800	500	4	2-9VA-12	90
Soda ash, driers	2,000	450	.....	1-9VA 4-4	92
Sodium nitrate, from crushers	80,000	Atm.	2	4-9VA 20-5	98
Stone crushers	14,640	100	4	1-9VA 30-5	90
Asphalt plant	14,000	225	4	1-9VD 30-5	90
Smelter, reverberatory bin	9,000	.....	2 1/2	2-9VA 6-3	90
Cement plant, rock driers	90,000	400	3 to 4	2-24VD 21-3	80
Copper converters	500,000	550	2 1/4	8-16VD 45-9	90

Power consumption of cyclonic equipment consists principally of the cost of moving the gas against the pressure differential of the collector. Assuming a 50% fan efficiency, the power required is approximately $0.3H$ hp. per 1,000 c.f.m., where H is the pressure differential in inches of water. Since a lesser percentage of the dust will ordinarily be collected at 1-in. pressure differential than at 3-in., the power consumption per unit weight of dust collected will not decrease in proportion to a decrease in pressure differential.

Thermix tubular collector (Fig. 15) is cylindrical throughout its length. It consists of an inner tube *a* and an outer tube *b* between which the separation is effected. The outer

tube is 6- or 9-in. diameter. Two long narrow slots c, opening into the outer tube from a plenum chamber e, impart tangential flow to the gas in the annular space d. Solid particles deposit on the outer wall of d and move downward by gravity and under the impulse

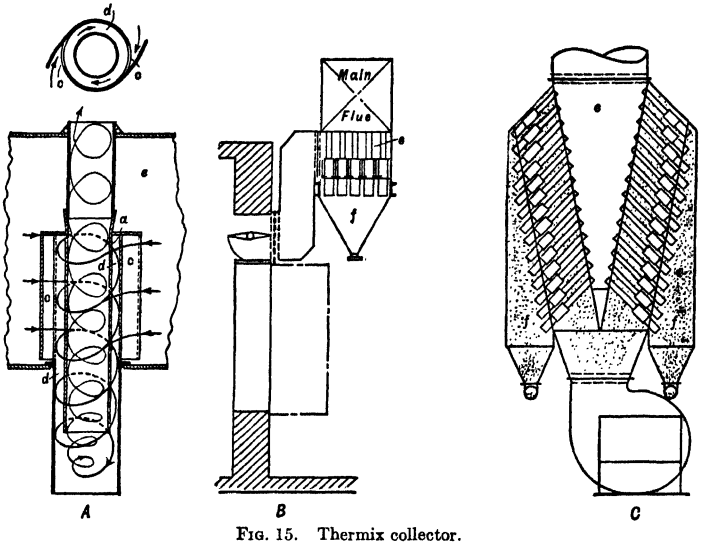

FIG. 15. Thermix collector.

of the downward component of the gas whorl in the annular space, which downward flow is enforced by the fact that the clean-gas outlet is upward through inner tube a. Dust discharges into closed dust chamber f at the bottom.

Sufficient capacity is secured by multiplying tubes in parallel (items B, C). Item B shows an arrangement in a boiler flue; in item C the tubes are set at an angle in a fan-discharge flue, in order to conserve space.

Collection efficiencies are said to range between 85 and 90% on pulverized fuel dust, with a draft loss of approximately 2 in.

Performance characteristics of high-velocity cyclones are given in Fig. 16. Item A shows the effect of diameter on resistance and separation for given gas throughputs;

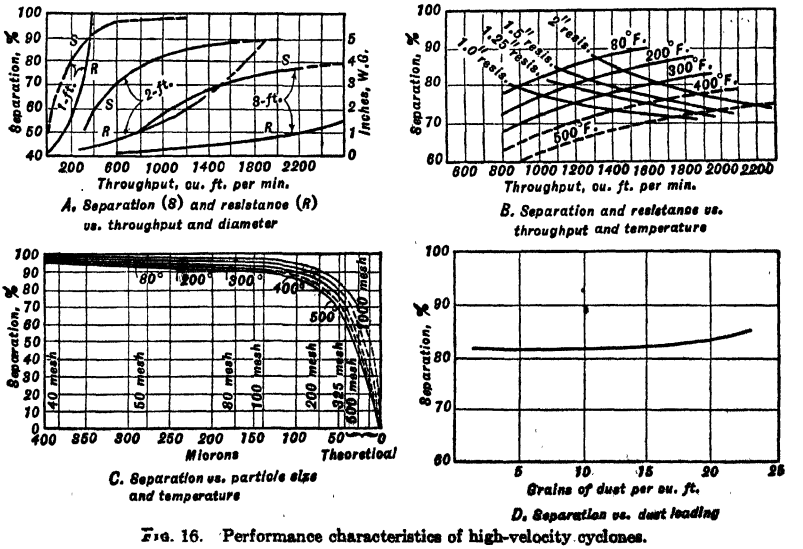

FIG. 16. Performance characteristics of high-velocity cyclones.

item *B* correlates separation, resistance, temperature, and throughput; item *C* shows the effects of particle size and temperature on separation; and item *D* the effect of gas loading on separation.

Scroll-type collector (Fig. 17) utilizes a high-speed fan (5,000 to 10,000 f.p.m. peripheral speed) to initiate the whirl of dirty gas in an enclosure resembling the housing of a centrifugal fan with the involute augmented to 1 3/4 turns. Gas inlet is at the center of fan rotor *a*. The fan discharges into involute *b*. After having completed 1 1/4 to 1 1/2 turns of the involute, the main gas stream is reasonably denuded of dust, which is concentrated in the peripheral layer. This is drawn off, to the extent of 10 to 20% of the volume of the stream, through a peripheral outlet *c*, the aperture of which is controlled by an adjustable damper *d*. Cleaned gas is discharged at *e;* the drawoff is sent to a cyclone *f*, which separates the bulk of the dust, returning its gaseous effluent to the inlet of the scroll.

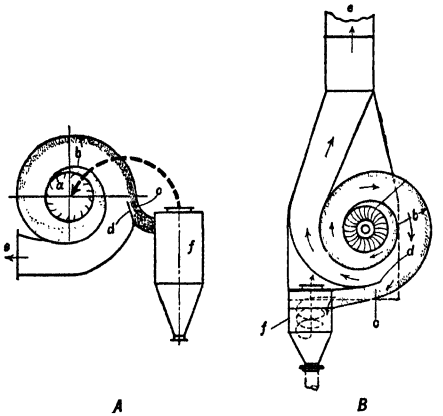

FIG. 17. Scroll-type dust collector.

Efficiency of the scroll is said by the manufacturer to be 90%; that of the cyclone from 50 to 90%; over-all efficiency, 81 to 89%. The apparatus is recommended for complete collection in connection with low-pressure conveying and exhaust systems.

Mechanical-type dust collectors

These machines utilize the specially conformed blades of an exhaust fan as the dust-precipitating surface. As a result they can be made into relatively compact units.

Roto-clone (Fig. 18) comprises a disk-shaped fan *B*, rotated at relatively high speed, to which dusty gas is fed through central duct *A*. The heavier dust particles precipitate on the disk; lighter particles are precipitated on the advancing faces of blades *C*, mounted on the inner surface of the disk. Centrifugal force moves the precipitates toward the rim of the disk, the blades being so contoured as to converge the stream of precipitate and lead it to a narrow annular opening through which it passes onto blade *D*, from which it discharges into a dust chamber *E*, while the clean-air stream passes on into scroll *F*. Blades *D* maintain a rotary current in *E* which sweeps the dust-laden stream through duct *G* into gas-tight hopper *H*, where the bulk of the dust settles and the substantially denuded gas recirculates through port *K* into chamber *E*.

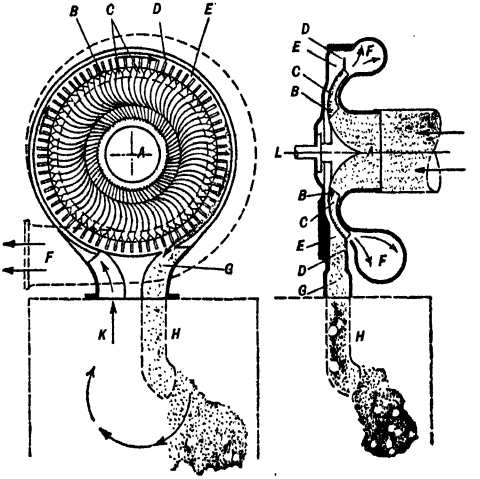

FIG. 18. Roto-clone.

Performance characteristics are those of a forward-curved blade fan; the operating range is that of a medium-pressure exhauster. The relationships between pressure, air volume, and horsepower follow the standard laws of fan performance. RATINGS are: Small unit, at 2-in. static pressure, 150 c.f.m. for 0.12 hp., and at 10-in. static pressure, 300 c.f.m. at 1.65 hp;. large unit, at 2-in. static pressure, 8,000 c.f.m. for 5.3 hp., and at 10-in. pressure, 20,000 c.f.m. for 75 hp.

Dust-separating efficiency varies with the nature and concentration of the dust, but in every case is appreciably higher than can be obtained with a cyclone or similar mechanical separator. The collection efficiency is not affected by changes in air volume or operating speeds, and remains constant over the

entire pressure-volume range. In general, 70 to 80% removal by weight is effected with dusts met in foundries and mines. It is reported that efficiency drops rapidly on 10-μ and finer particles. It is argued that since dust collection occurs as an incident to the work of the fan as an exhauster, a power saving is effected equivalent to the static losses in other types of collectors.

Wet Roto-clone (Fig 19) uses a water spray in conjunction with an impeller. The machine is of the same general construction and operating principle as the dry form (Fig. 18), but dust-laden gas entering through duct E is sprayed in zone F by water from pipe G. Rotor Q is a flat disk with a central cone and peripheral blades H. Lead-off tips K, specially conformed to minimize spraying, deliver sludge into passage L and thence through duct N into the collecting hopper. Cleaned air discharges through scroll M. If desired, the dusty gas may be run first through pipe A into a scroll in the upper part of the dust hopper; here it receives a preliminary spraying, and the coarsest material is dropped out, saving wear on the fan.

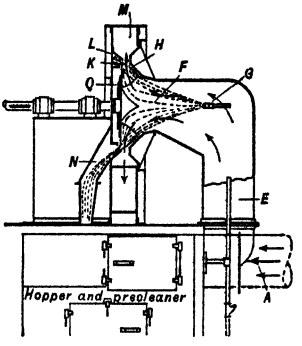

FIG. 19. Wet Roto-clone.

RATINGS range for the small unit from 1,000 c.f.m. at 2-in. water-gage pressure, requiring 1 hp., to 1,300 c.f.m. at 10-in. water gage requiring 5 hp.; for the large unit, from 30,000 c.f.m. at 2-in. water gage, requiring 35-hp., to 37,000 c.f.m. at 10-in. water gage, requiring 140 hp., without a precleaner; when the precleaner is used, the maximum pressure available is 7-in. water gage and power is increased about 50%.

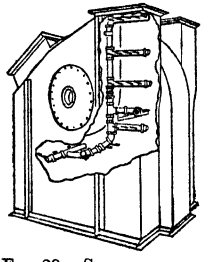
FIG. 20. Spray arrangement for Hydro-volute scrubber.

Hydro-volute scrubber comprises a special fan with a water-spray assembly (Fig. 20) in the volute inlet boxes, to wet down the dust. A strong vortex action is maintained as the air passes to the fan impeller, which throws out much of the wetted dust and water and prevents them from entering the fan. For the finest dusts, a high degree of agitation in the presence of a water spray is necessary. For this service a two-element fan is used—the air with its dust and water content enters at the center of one side of the wheel, and is discharged at the center of the other wheel.

5. AIR (GAS) FILTERS

When dusts are very fine and/or the loading is light (1 to 10 gr. per cu. ft.), collection is frequently effected by filtration. The usual filter medium is some type of cloth. Two systems of cloth mounting are used, *viz.*, tubular bags, and rectangular sheaths covering a screen-frame support. Filtration and discharge of pack are intermittent; continuous operation is achieved by use of multiple units with manual or mechanical switching.

Tubular filter (Fig. 21) comprises from 1 to about 600 long (4- to 24-ft.) cloth bags a of small diameter (3- to 9-in.), closed at the top and open at the bottom, hung from a shaking frame b in a chamber c, closed at the top, having inlet pipe d and outlet pipe e let into the walls, with a gas-tight baffle f between; and closed at the bottom with a tube sheet g, onto the sleeves of which the lower open ends of the bags are clamped. The baffles f and tube sheet g thus serve as a diaphragm to separate the dusty-air plenum chamber h from the clean-air chamber c. Hopper i forms a sealed closure for the bottom of chamber h.

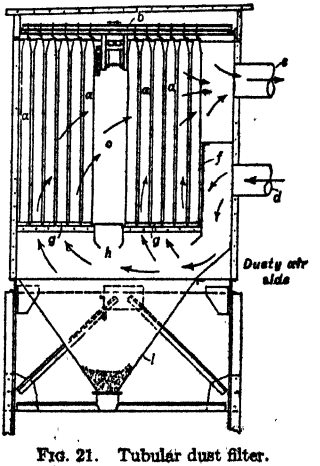

FIG. 21. Tubular dust filter.

In operation, dusty air enters at d, is deflected downward into chamber h, where it may drop some dust, and then passes through tube sheet g up into bags a. The gas passes through the bag walls into chamber c, depositing dust on the inside walls of the bags, and passes out through duct e. Intermittently the supply of dusty air is shut off, and shaking device b is operated for an interval to dislodge the dust pack, which drops through the tube-sheet holes and through chamber h into hopper i, from which it is discharged as desired by a dust lock.

Screen-frame filter (Fig. 22) has the cloth filter sheaths, which are flat rectangular bags *a* open at the top, slipped over screen frames *b*, and clamped together at the open edges, as shown in item *B*, so that the clamped edges close off the dust-filled chamber *c* below from the clean-air chamber *d* above. Dusty air enters at *e*, circulates upward around the frames in the interspaces *c*, air passes through the bag walls into the interior of the bags, depositing dust on the outside, and passes upward in the spaces *f* (item *B*) maintained between the bag walls by the coarse screen, and thence out at the top into chamber *d* and outlet *g*. The frame *h* supporting the screen frames is jarred at intervals (with feed supply shut off) by a manual knocker *i* and anvil block *j*, or mechanically by manual or automatic control. Dust drops into hoppers *k* and is discharged through the customary dust lock. Capacity is obtained by multiplication of frames ranging in size from 1 sq. ft. to about 60 sq. ft. each side.

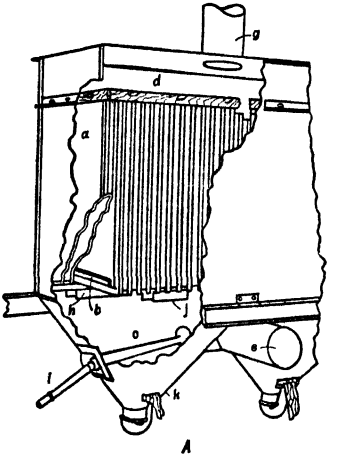

FIG. 22. Frame filter.

Shaking intervals vary with the rate at which back pressure develops, which depends, in turn, on the fineness of the dust and the dust load; intervals range from 5 or 10 min. to 4 or 5 hr. Presettling is often used to reduce excessive loads. Frequency of interval and thoroughness of dust removal are inversely related for the reason that the dust pack rather than the filter fabric is the effective separating surface (see Sec. 16, Art. 2).

Fan is placed on either the inlet or the outlet side; the latter placing is usual with abrasive dusts, in order to save fan wear.

Cloth. Different cloths are used according to the service. Cloth should always be the most permeable that will remove the dust and stand up in service. PERMEABILITIES (and relative pore sizes) are indicated by Fig. 23. Drop for felts is 0.004 to 0.008 in. of water per f.p.m. of mean through-cloth velocity; for Canton flannel, 0.012 to 0.020 in.; for vacuum-cleaner cloth, 0.019 to 0.060 in. GAS VELOCITY through the filter is normally in the range of 2 to 4 f.p.m., *i.e.*, 2 to 4 c.f.m. passing each square foot of filtering area (called the RATIO). Ratios as low as 0.5 are used in filtering fumes that tend to blind the cloth. Cement, feldspar, and silica dusts are filtered at ratios of 1.5 to 3. Higher ratios may be employed; they result in high resistance and rapid deterioration of filter cloth.

LIMITING TEMPERATURE for cotton filter fabric is approximately 175° F. This limit may be somewhat extended by using wool fabric; considerably with asbestos fabric, but at some sacrifice of filtering efficiency. If the gas contains moisture, temperature must be maintained above the dew point to prevent condensation and sludging of dust on the cloth. Deleterious reaction on the fabric by the gas must be avoided. Fabrics are sometimes fire-proofed.

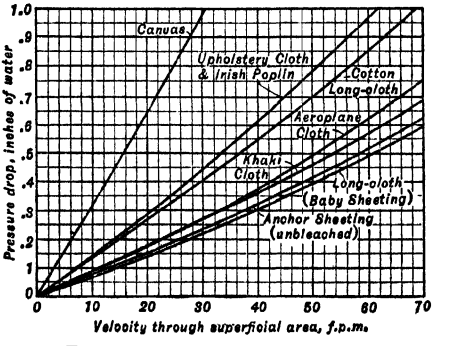

FIG. 23. Permeabilities of filter cloths.

Spark screen of wire is installed in a compartment ahead of the filter-cloth section when there is a possibility of sparks or incandescent materials being introduced; this screen is usually fitted with a rapping mechanism to shake down dirt and lint.

Clean-air filters are placed on air-feed lines designed to supply dust-free air. They constitute a considerable variety of filtering media, which are mounted as diaphragms across the air duct. The simplest are fine-mesh SCREENS, which, of course, remove initially only lint, and liquid droplets (oil) which impinge directly on the screen wire. After a coating of lint has built up, efficiency increases somewhat, since flow is rendered more turbulent and impingement surface (the lint strands) is increased. A structure built

of ZIGZAG VANES works on the same general principle as the screen, but, having greater depth along the line of flow, it offers more impingement area after turbulence has been initiated. MATS of fibrous material held between coarse screens, and of granular material between finer screen, embody the same turbulent-impingement principle. WATER SPRAYS between diaphragms of plane or zigzag vanes (SCRUBBER FILTERS) are designed in the hope that the pores in the water curtain will be small, that the spray will induce high turbulence in the air stream, and that the dust will adhere to the water droplets on which it impinges. All three hopes are largely chimerical so far as fine dust is concerned. OIL CURTAINS are formed by trickling oil over screens and the like, in the expectation that the oil will wet and hold dust particles better than water. It will, but since it cannot be discarded as freely, the installation must include means for recirculation, cleaning the oil, and the like, and the oil curtain itself must either be highly porous with respect to the finest dusts or the pressure drop must be such as tends to emulsify oil in the air stream.

6. SPRAY WASHERS

A spray tower is a chamber, elongated vertically, within which dust particles and liquid droplets are brought into contact by causing the liquid to trickle downward over finely irregular surfaces, countercurrent to a stream of gas.

The size of the liquid droplets is regulated in accord with the size of suspended particles, on the principle that the interstices between drops for a given liquid loading of the gas are smaller the smaller the drops. Separation is essentially inertial, and is dependent, therefore, on effecting and maintaining the highest possible relative movement between droplets and the gas stream. If both droplets and particles move with the gas stream, contact between them is slight.

Removal of liquid from the cleaned gas is also a necessary part of spray-tower operation. Inertial or gravitational methods are ordinarily used; their effectiveness is in inverse relation to the effectiveness of spray formation.

Packed towers, in which a suitable filling material is closely packed on suitable supporting grids, are the simplest form of spray tower. The filling materials are commonly broken rock, brick, or metallurgical coke, or specially conformed tile. Liquid is distributed over the top of the packing and in trickling down meets streams of gas rising through the interstices. The splattering of the falling liquid streams on the solid surfaces and the frictional effects of the gas streams break the liquid into droplets of a size dependent upon the surface tension and viscosity of the liquid and the gas velocity. The tortuous path of the gas induces high turbulence, if the streams are of sufficient velocity, which produces the desired inertial effects.

DISADVANTAGE of packed towers is the high pressure drop through them. Most modern towers reduce pressure drop by increasing the cross-section and directness of the gas path, and make up for this by imparting high rotational velocity to the stream as a whole.

Multi-wash collector (Fig. 24) consists of a cylindrical sheet-metal tower *a* with bottom tangential gas-inlet duct *b*, a plurality of so-called impingement plates *c*, a liquid-inlet pipe *d*, and a tangential gas-outlet pipe *e* at the top.

The principle of the device is to cause rapid rotary travel of the gas by reason of the tangential inlet and outlet ducts and suitable curvature of the vanes on the impingement plates, thus causing the general path to be a rising spiral; at the same time to wet down all interior surfaces, and to interrupt the downward flow of liquid along them frequently, so that the rapid counterflow of gas across the surfaces, particularly at the points of interruption, will break the liquid into fine droplets and disperse it as a mist throughout the gas to be cleaned. The end sought is to produce maximum dust-collecting surface.

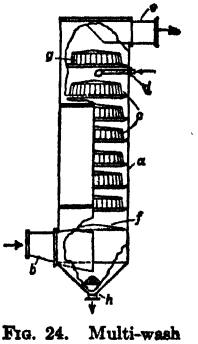

FIG. 24. Multi-wash spray tower.

Action in the Schneible apparatus pictured consists of rough separation in the wet cyclone comprising the bottom section of the tower under the plain baffle *f;* thereafter more or less of the sought-for mist formation occurs in the plates *c*, with accompanying dust impingement against the wetted walls, and, what is more important, against the mist droplets; an attempt is made to separate mist in the top vane-plate by the same impingement principle, and there is final discharge of cleaned gas through *e*, and of a liquid sludge through a valved bottom outlet *h*.

Manufacturer's data. Diameters of tanks range from 2 1/2 to 10 1/2 ft. with corresponding lengths from 12 to 43 1/2 ft., and corresponding capacity ranges from 1,500 to 30,000 c.f.m. of gas. Wash-liquid requirement is 3 gal. per 1,000 cu. ft. of gas. Loss of water by evaporation in air cleaning is said

to be about 3% of the flow. Sludge liquid may be cleaned for re-use by the usual methods of liquid-solid separation (Secs. 15, 16). Pressure drops vary, according to the number of plates, from 2 1/8- to 3 1/8-in. water gage.

Freyn tower (Fig. 25) has a simple wet-cyclone section *a* at the bottom, a trickle section *b* of wooden grids through the center, and a second cyclone section *c* at the top wherein the gas whorl is induced by high-pressure tangential sprays and a spiral baffle, and vertical vanes *d* on the periphery act as impingement plates and to increase turbulence.

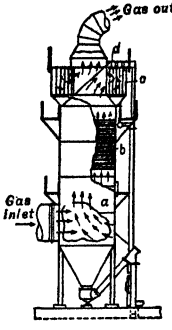

FIG. 25. Freyn spray tower.

Performance on blast furnace gas is said to be reduction of solid content to 1 gr. per cu. ft. with a consumption of 20 to 30 gal. of water per 1,000 cu. ft. of gas.

Brassert tower developed primarily for blast-furnace fume, contains, in order from bottom to top, a perforated conical baffle, a series of high-pressure spray nozzles and stationary spiral passages, a set of baffles, a droplet eliminator, and an expansion chamber. Manufacturer states that water requirement is 12 gal. per 1,000 cu. ft. of gas washed; that total pressure drop is 24.5-in. water gage; that the outlet gas is 5° F. above inlet-water temperature, and contains 0.015 gr. of solid per cu. ft. of gas, 82% of which is $<2\ \mu$; that the power required for high-pressure water is 1.7 hp. per 1,000 cu. ft. of gas per min., and that the total power consumption is 4.5 hp. per 1,000 cu. ft. of gas per min.

Horizontal spray washer (Fig. 26) consists of a series of vertical perforated baffles *a* and *b* set across a horizontal duct, with sprays *c* arranged to impregnate the chambers ahead of the baffles with liquid droplets. Flooding nozzles *d* are designed to maintain a curtain of liquid trickling down across the baffles. Water is recirculated from the clean end of the tank *f* through a pump taking suction on outlet *e*. Exhaust fan *g* takes suction on the scrubber. The number of plate banks depends upon the duty. Pressure drop per bank is 1/4- to 1/2-in. water gage. Flooding water is supplied at 3- to 5-lb. pressure; spray water at 20- to 25-lb.

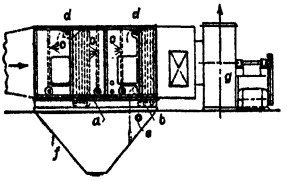

FIG. 26. Horizontal spray washer.

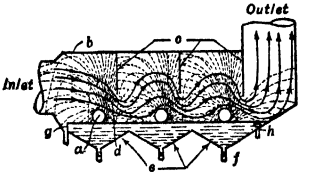

FIG. 27. Hardinge rotor-spray washer.

Rotor-spray washer (Fig. 27) consists of a light-weight hollow water-tight cylinder *a*, 12 in. in diameter by 4 ft. long, mounted on a high-speed shaft so as to be partly immersed in a body of water in *e*. The water film adhering to the revolving drum is thrown off in the form of a dense spray. Spraying capacity is controlled by the depth to which the cylinder is immersed. One or more rotors are mounted in a horizontal gas duct *b* in such a way as to force the gas stream to pass through the body of spray. Baffles *c* constrict the stream and force countercurrent travel through the zone of maximum spray velocity at *d*. Droplets carrying solid fall into tank *e*, where some sedimentation occurs. The coarser solids are drawn off periodically through spigots *f*; finer solid overflows weir *g*, water being supplied at *h* to maintain overflow.

A 1×4-ft. rotor requires a 1-hp. motor and sprays 150 g.p.m. of water. Pressure drop is 1/8- to 3/8-in. water gage.

The device has utility also in gas absorption and in washing out some liquid-in-gas emulsions. The method of spraying is superior to a nozzle for slurries containing abrasive solids or coarse fibers.

7. ELECTRICAL DUST PRECIPITATION

Electrical precipitation depends upon the fact that a corona of gas molecules moving at very high velocity is formed around conductors of small radii of curvature when these are charged at high voltage and that collisions between these molecules result in ionization. When a grounded conductor is placed near the first, the ionized molecules stream toward it and discharge. If the gas in the intervening space carries dust particles, those with which the ionized gas molecules collide become themselves charged, if they have any

conductive capacity, and thereafter act themselves as ions and travel, at rates that vary directly as the number of charges that they carry and inversely as their masses, toward the grounded electrode. The number of gaseous ions formed is very large; hence the sweeping of the intervening gas space is thorough.

Pipe-type electric precipitator (Fig. 28) comprises essentially the grounded tubular chamber *a*, formed of conducting material, through which gas is flowed from bottom to top; and the suspended charging wire *b*, which is energized through a rotary converter *c* or other form of rectifier, via step-up transformer *d* from an a.-c. line. Dust precipitated on the inner wall of *a* is held by the pressure of the arriving swarm of ions and ionized particles until enough has precipitated and packed for gravity to become effective to cause it to fall and discharge at *e*. A number of such tubes enclosed in a tower which serves both to lead gas through the battery and to protect the high-tension equipment from weather and from human contact comprises a unit.

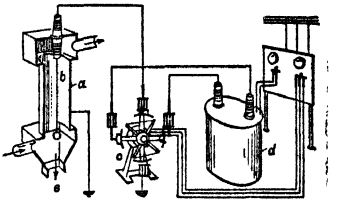

FIG. 28. Pipe-type electric precipitator.

Collecting electrodes may be parallel metal plates or screens, or rows of rods or wires; with the perforate collectors the gases may be passed either parallel or perpendicular to their planes.

Tubes are usually 6 to 12 in. in diameter and 9 to 15 ft. long. Materials of the collector electrodes are made corrosion-proof against the collector atmosphere and the precipitated material. In some cases the collector electrodes are imbedded in a protective cover of cement.

Capacity depends upon rate of charged-particle travel and the distances that such particles must travel before precipitation, as well as upon the completeness of precipitation demanded (*E*). The relation between *E* and the time *t* that gas remains in the field is given by the equation

$$\log (1 - E) = t \log K \qquad (23)$$

in which the precipitation constant *K* depends upon the type of equipment and the character of the suspended material, and ranges from 0.05 to 0.50 under normal conditions, but is always less than 1.0.

Efficiency may be made anything that is desired, but the size of precipitator necessary increases very rapidly for efficiencies above 90%. For discussion of economic size see *16 AIChE 69; 106 A 316.*

Draft loss is usually less than 1/2-in. water gage.

Cost of apparatus for cleaning atmospheric air of low dust concentration is about 15¢ per c.f.m. capacity (1943); the range for dust, fume or mist collection is from 20¢ to $1 per c.f.m. capacity, depending upon the efficiency desired and the materials of construction necessary. OPERATING COST is from 1¢ to 15¢ per 100,000 cu. ft.

Applicability. The apparatus is currently used at gas temperatures as high as 1,200° F., and for mists as corrosive as those of the strong inorganic acids.

Sonic flocculation. Fine dusts, smoke, fume, and fogs can be flocculated by high frequency sound, whereupon separation may be effected by gravitational or inertial methods. No commercial apparatus is available. Experimental work is described by St. Clair (*3400 RI 51; 18 MMt 244*). FREQUENCIES used in the experimental work ranged from 10,000 to 20,000 cycles per sec. (the upper audible into the supersonic range of wave length). The apparatus for sonic flocculation consisted of a vibrating-piston sound source coupled to a resonant enclosure. The gas containing fine particles entered the resonant enclosure through rings of holes at the top and left through similar ports at the bottom. St. Clair advances the theory that the agglomerating effect of a sound field can be attributed to the increased effective diameter of each particle as a result of hydrodynamic forces set up between particles when the medium is vibrating between them. Also, he speculates that when the velocity in the flocculating chamber is low, radiation pressure may be effective. The radiation pressure acting on a small sphere suspended in a vibrating medium is of much greater magnitude for a standing wave than for a progressive wave. St. Clair shows by mathematical deduction that the force is proportional to the volume of the sphere and to the energy density, and is inversely proportional to the wave length. It is equal to zero at both the node and antinode, reaching a maximum midway between, and it acts in such a direction as to urge the particle toward the antinode.

8. DESIGN OF DUST-COLLECTING SYSTEM

A dust-collecting system comprises the collecting and conveying system and one or more separating apparatus of the types described in Arts. 3 to 7. The collecting and conveying system consists of (*a*) collecting openings or hoods, placed and conformed to surround the dust-making center as completely as is consistent with inflow of gas for conveyance; (*b*) ducts for transport of the dusty gases to the separator; and (*c*) means, usually a fan or fans, to move the dust-laden gas.

The conveying capacity of a gas depends primarily upon its velocity. (See Eqs. 14, 15, 16, and Fig. 4.) Resistance in the conveying system varies almost directly as the weight of material conveyed. If resistance in a system builds up to the point that the pressure differential is insufficient to maintain critical conveying velocity, the system deposits solid in the lines, which is a frequent cause of trouble in poorly designed collecting systems.

Requirements. The important requirements to be satisfied are: (1) Hoods, ducts, fans, and collectors should be of adequate size. (2) Air velocities throughout should be sufficient to convey the suspended material under all loading conditions contemplated, with additional allowance for normal contingencies. (3) Hoods and ducts should not interfere with the operation of a machine, should be readily removable to permit convenience in repair, and should have adequate inspection doors. (4) The system should do the required work with minimum power consumption. This means, among other things, that velocities should be kept down to the minimum safe value.

Actual design usually starts with a scale floor plan of the machinery to be served, on which should then be marked the probable dust loads and/or the probable minimum suction, velocity, or volume at each dust-making center. Next, sketches of the hoods necessary at these various points should be made, these being the starting point in the detailed design. Thereafter design of the conveying system comprises determination of branch lines from hoods to main ducts, of the main ducts, and of the fan.

Suction openings

The effectiveness of a suction opening depends upon its proximity to the source of dust, the face velocity (average inward velocity across the intake section), the size of the dust particles, and their state of motion.

Proximity. The velocity of approach to a suction opening decreases rapidly as the distance from the face increases. When normal flow toward the face is unobstructed, velocity of approach V_A is given by the equation

$$V_A = 0.1Q/(x^2 + 0.1A) \qquad (24)$$

where Q = volume of gas entering, c.f.m.; A = area of face, sq. ft.; x = distance along axis, ft., and V_A is in f.p.m. This equation also gives the volume of gas that must be flowed into a given opening for a specified velocity of approach at a distance from the face.

Item	Form of Orifice	Description	Coefficient of Entry C_e	Loss in % of velocity head h_e
a	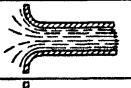	Smooth well rounded	0.98	4
b	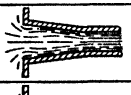	Flanged cone, 13° included angle	0.94	13
		Flanged cone, 30° included angle	0.90	24
c	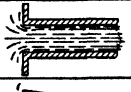	Flanged pipe	0.82	49
d	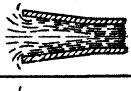	Unflanged cone, 13° included angle	0.82	49
		Unflanged cone, 30° included angle	0.78	60
e	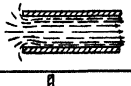	Unflanged pipe	0.72	93
f	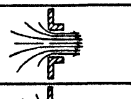	Short flanged pipe, less than 1½ diameters long a	0.60	178
g	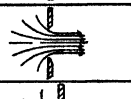	Thin-plate orifice a	0.60	178
h	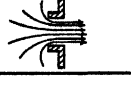	Short protruding pipe, less than 1½ diameters long a	0.53	256

a Entering a large chamber.

FIG. 29. Entry characteristics of standard orifices (*after Alden*).

Face velocity. When a gas enters a suction opening there is a loss of velocity head and a reduction in cross-section of the stream. The extent of these changes depends, all other

things being equal, upon the shape of the entrance opening. Reasonably accurate determination of the numerical values of the changes have been made for typical standard orifices of circular cross-section. Values are given in Fig. 29. Values for hoods and other forms of enclosures for mill dust collection are not established, but are approximated in designing from their resemblance to standard orifices. A few experimental values given by Alden (*loc. cit.*) are shown in Fig. 30. The general relation between entry coefficient and entry losses is given in Fig. 31.

Item	Hood Type	Nearest simple orifice (Fig. 30)	Entry coefficient C_e	Entry loss, h_e, % of velocity head
a		Flanged pipe	0.82	0.49
b		Flanged pipe	0.82	0.49
c		Flanged pipe	0.82	0.49
d		Flanged pipe; chamber loss reduces C_e	0.79	0.60
e		13° unflanged cone	0.82	0.49
f		Unflanged pipe and mitre elbow (pressure measured in pipe)	0.57	2.08
		Unflanged pipe (pressure measured in hood)	0.72	0.93
g		Unflanged pipe and square-throat elbow (pressure measured in pipe)	0.61	1.69
h		Unflanged pipe and mitre elbow (pressure measured in pipe)	0.57	2.08
i	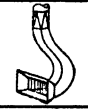	30° unflanged cone and 2 elbows (pressure measured in pipe above square-to-round)	0.71	0.99

FIG. 30. Entry characteristics of particular suction openings (*after Alden*).

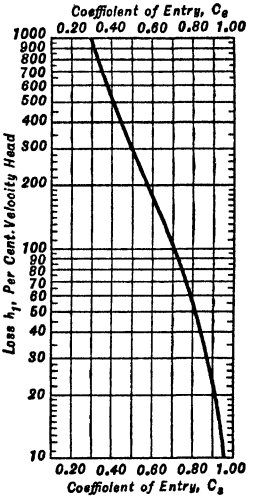

FIG. 31. Entry coefficient *vs.* entry loss (*after Alden*).

The data of Figs. 29 and 30 apply to the face at entry to the duct, not to the face of the hood. Velocity at the latter point is to be approximated by application of Eq. 25.

Size of dust particle. No definite relation between particle size and face velocity at the hood mouth has been established. Experimentation on actual dusts requires substantial reproduction of actual conditions; hence it is not done in practical design. Rather some empirical figure based on calculation of mean velocities in existing installations is adopted. When the dust itself has a velocity of escape from the point of generation, this should be utilized, if possible, in hood design; otherwise the inlet velocity must be great enough to reduce escape velocity to zero, and additionally to set up an inflow current that will transport the dust to the duct face. Hood design should, if possible, be such that the dust is projected into the region of maximum gas velocity through the hood. Recommended velocities for usual enclosures are given in Table 10.

Table 10. Recommended face velocities through top hoods and booths subject to cross drafts (*after Alden*)

Description	Velocity, f.p.m.
Canopy hood, plain	
Open, flow through 4 sides	200 to 250
Closed on 1 side, flow through 3 sides	175 to 200
Closed on 2 sides, flow through 2 sides	150 to 175
Closed on 3 sides, flow through 1 side	100 to 150
Booths, through one side	100 to 150
Laboratory hoods (door open), through door	50 to 75

Pressure *vs.* velocity. Two pressures are important in ordinary dust-conveying problems, *viz.*, static pressure and velocity pressure. The former is the push behind the gas, causing its motion; the latter, the force required to accelerate the gas. The sum of these pressures (dynamic or impact pressure) is the total pressure of the moving air on any

object in its path. Static pressure overcomes the resistances to flow set up by the system; it decreases along the line of flow; the difference in static pressure between two points along the line of flow (PRESSURE DROP) is a measure of the resistance of the system between the two points. Static pressures are ordinarily measured by the vertical height of a column of water in balance with them (h_s); a column 1 in. high (1-in. water gage) corresponds to a gas pressure of 0.0361 lb. per sq. in. A static pressure of 1-in. water gage produces an air velocity at 70° F. and standard pressure of 4,005 f.p m. when static pressure is completely converted to velocity pressure h_v. The general relation between V and h_s is

$$V = 4{,}005\sqrt{h_s} \tag{25}$$

Values of V for different values of h_s at 70° F. and standard pressure are given in Table 11; values at other temperatures in Table 12.

Velocity head for air, on the assumption of complete conversion of static pressure to velocity head, is

$$h_v = \sqrt{V/4{,}005} \tag{26}$$

Table 11. Corresponding static pressures and velocities of dry air at 70° F. and 29.92 in. of mercury (*after Buffalo Forge Co.*)

Water gage, in.	Oz. per sq. in.	Velocity, f.p.m.	Water gage, in.	Oz. per sq. in.	Velocity, f.p.m.
0.05	0.0289	896	4.77	2.750	8,745
0.10	0.0577	1,266	5.00	2.884	8,943
0.20	0.1154	1,791	5.20	3.000	9,134
0.25	0.1443	2,003	5.50	3.172	9,392
0.30	0.1730	2,193	6.00	3.460	9,810
0.40	0.2308	2,533	6.07	3.500	9,864
0.43	0.2500	2,637	6.50	3.749	10,210
0.50	0.2884	2,832	6.94	4.000	10,545
0.60	0.3460	3,102	7.00	4.037	10,595
0.70	0.4037	3,351	7.50	4.326	10,968
0.75	0.4326	3,468	7.80	4.500	11,187
0.80	0.4614	3,582	8.00	4.614	11,328
0.87	0.5000	3,729	8.67	5.000	11,792
0.90	0.5190	3,800	9.00	5.190	12,015
1.00	0.5768	4,005	9.54	5.500	12,367
1.25	0.7209	4,478	10.00	5.768	12,665
1.30	0.7500	4,566	10.40	6.000	12,915
1.50	0.8650	4,905	11.00	6.344	13,282
1.73	1.0000	5,273	11.27	6.500	13,445
1.75	1.0092	5,298	12.00	6.921	13,875
2.00	1.1535	5,664	12.14	7.000	13,950
2.17	1.2500	5,895	13.00	7.497	14,440
2.25	1.2975	6,007	13.87	8.000	14,913
2.50	1.4418	6,332	14.00	8.074	14,985
2.60	1.5000	6,457	15.00	8.650	15,510
2.75	1.5860	6,641	15.61	9.000	15,820
3.00	1.7300	6,937	16.00	9.227	16,020
3.03	1.7500	6,976	17.00	9.805	16,513
3.25	1.8740	7,220	17.34	10.000	16,675
3.47	2.0000	7,457	18.00	10.380	16,990
3.50	2.0185	7,492	19.00	10.960	17,456
3.75	2.1630	7,756	19.07	11.000	17,488
3.90	2.2500	7,910	20.00	11.535	17,910
4.00	2.3070	8,010	20.81	12.000	18,265
4.25	2.4510	8,256	22.54	13.000	19,012
4.34	2.5000	8,337	24.28	14.000	19,730
4.50	2.5950	8,496	26.01	15.000	20,420
4.75	2.7395	8,729	27.74	16.000	21,090

Table 12. Velocities of dry air at various static pressures and temperatures 29.92 in. of mercury (*after Buffalo Forge Co.*)

Pressure		Temperature, °F.									
Water gage, in.	Oz. per sq. in.	50°	60°	70°	80°	100°	150°	200°	300°	500°	650°
0.1	0.0577	1,242	1,255	1,266	1,278	1,300	1,358	1,413	1,516	1,704	1,830
0.2	0.1154	1,757	1,776	1,791	1,808	1,841	1,921	2,000	2,145	2,411	2,590
0.25	0.1443	1,965	1,986	2,003	2,022	2,059	2,149	2,235	2,399	2,696	2,895
0.3	0.1730	2,151	2,175	2,193	2,214	2,254	2,352	2,447	2,626	2,952	3,175
0.4	0.2308	2,485	2,512	2,533	2,557	2,603	2,717	2,827	3,033	3,409	3,660
0.5	0.2884	2,778	2,808	2,832	2,859	2,911	3,038	3,160	3,391	3,812	4,095
0.6	0.3460	3,043	3,076	3,102	3,131	3,188	3,327	3,462	3,715	4,175	4,490
0.7	0.4037	3,287	3,323	3,351	3,383	3,445	3,595	3,740	4,013	4,510	4,850
0.75	0.4326	3,402	3,439	3,468	3,501	3,565	3,720	3,870	4,153	4,668	5,020
0.8	0.4614	3,524	3,552	3,582	3,616	3,682	3,843	3,997	4,290	4,821	5,185
0.9	0.5190	3,728	3,768	3,800	3,836	3,906	4,076	4,241	4,550	5,114	5,500
1.0	0.5768	3,929	3,971	4,005	4,043	4,117	4,296	4,470	4,796	5,390	5,795
1.25	0.7209	4,393	4,440	4,478	4,520	4,602	4,804	4,997	5,362	6,027	6,470
1.50	0.8650	4,812	4,864	4,905	4,952	5,042	5,262	5,474	5,874	6,602	7,100
1.75	1.0092	5,197	5,254	5,298	5,348	5,446	5,683	5,912	6,344	7,131	7,655
2.00	1.1535	5,556	5,616	5,664	5,718	5,822	6,076	6,320	6,783	7,624	8,195
2.25	1.2975	5,892	5,956	6,907	6,064	6,174	6,443	6,704	7.193	8,085	8,690
2.50	1.4418	6,211	6,278	6,332	6,392	6,508	6,792	7,066	7,582	8,523	9,150
2.75	1.5860	6,514	6,585	6,641	6,704	6,827	7,124	7,412	7,952	8,938	9,600
3.00	1.7300	6,807	6,879	6,937	7,003	7,130	7,440	7,742	8,307	9,336	10,000
4.00	2.3070	7,857	7,942	8,010	8,086	8,233	8,592	8,940	9,581	10,780	11,580
5.00	2.8840	8,772	8,867	8,943	9,027	9,192	9,593	9,980	10,710	12,037	12,900
6.00	3.4600	9,623	9,728	9,810	9,903	10,083	10,523	10,950	11,750	13,203	14,180

Ducts

Friction loss always occurs in movement of fluids past rigid surfaces, such as pipe walls. In design of ducts this friction loss is calculated and added to the static head required for a given velocity in order to determine the total head required. The magnitude of friction head is given by the equation.

$$P_f = ph_f = flpV^2/2gd \qquad (27)$$

where P_f = pressure drop, lb. per sq. ft.; h_f = pressure drop in ft. head of gas; p = density of gas, lb. per cu. ft.; f = friction factor (dimensionless coefficient); l = length of duct, ft.; V = velocity of fluid, f.p.s.; g = gravity constant, f.p.s.p.s. (32.2); d = diameter of circular duct, ft.; and b = absolute viscosity, lb. per sec. per ft. The friction factor f is dependent upon whether flow is laminar or turbulent. This question may be resolved by solution of the Reynolds-number (R_N) equation

$$R_N = Vdp/b \qquad (28)$$

Graphical solution is given in Fig. 32. Viscosities of common gases are given in Fig. 33.

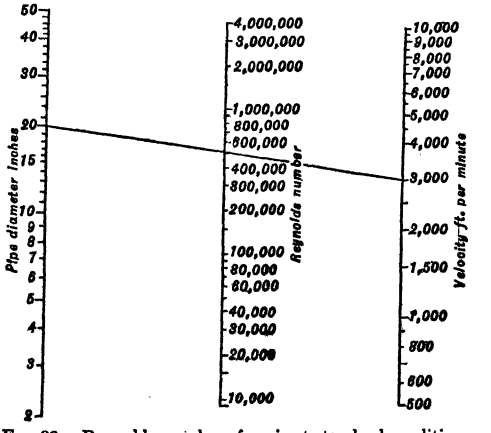

Fig. 32. Reynolds numbers for air at standard conditions in sheet-iron pipes.

The critical velocity (velocity at which the nature of flow changes) corresponds to Reynolds numbers between 2,000 and 3,000; for values above 3,000 the flow is always turbulent; below 2,000 it is ordinarily laminar. Reynolds numbers for the velocities normally met with in dust collection are well upward of 100,000; hence flow is invariably turbulent.

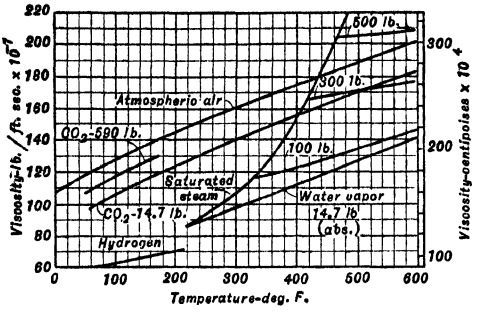

FIG. 33. Viscosities of common gases (*after Buffalo Forge Co.*).

The relation between friction factor and Reynolds number is given by the equation

$$f = ku^n/Vd \qquad (29)$$

where k and n are functions of the roughness of the pipe.

Fanning equation for friction loss, expressed in in. water gage h_L is

$$h_L = 0.769flpV/d \qquad (30)$$

where units are as in Eq. 27. Solution of the equation for air in round pipes is given in Fig. 34. The chart accords with Eq. 27 within 2% for standard air between 32° and 100° F., and friction conditions such as are found in galvanized iron ducts with normal seams. For straight smooth galvanized ducts and wrought-iron pipe apply a factor of 0.9; for riveted sheet, slightly encrusted pipe, or concrete, use a factor of 1.1.

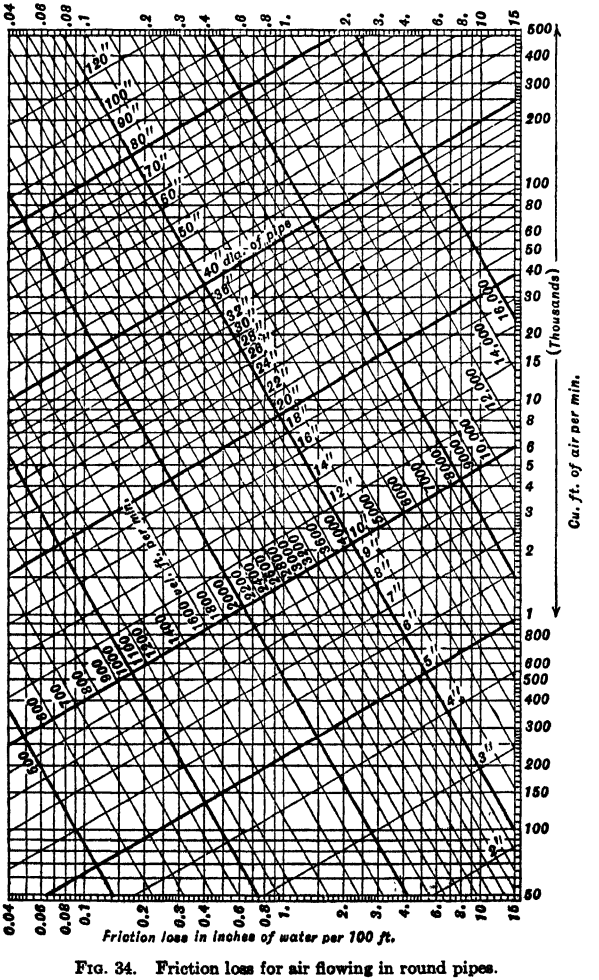

FIG. 34. Friction loss for air flowing in round pipes.

Another expression for the Fanning equation is

$$h_L = flh_v/d = \frac{1}{C} \cdot \frac{l}{d} \cdot h_v \qquad (31)$$

where C = length of pipe in diameters equivalent to a loss of one velocity head h_v, and h_v, in in. water gage, = $(V/4{,}005)^2$. For all practical purposes values of C are 60 for perfectly smooth pipe, 55 for pipe normally used in exhaust systems, 50 for ventilating ducts, and 40 for rough conduits of tile, brick, or concrete.

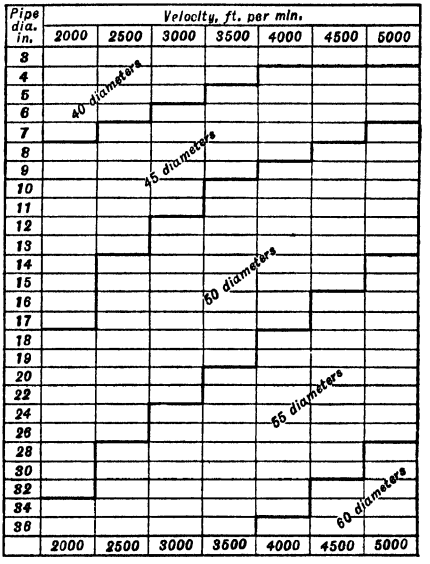

FIG. 35. Frictional resistance in straight pipes; diameters per one velocity head of pressure drop.

Engineering data for duct losses are conveniently tabulated and charted in terms of velocity heads, since duct resistances result in losses of velocity head, and the magnitude of the resistance and loss is proportional to the velocity. Such data are given for pipe in Fig. 35, for 90° elbows in Table 13, for elbows of other angularities in Table 14, for losses in mains at junctions with a branch in Table 15, and for losses in tees in Table 16.

Table 13. Resistances of square and round 90° elbows

Center-line radius in pipe diameters	Elbow loss in velocity heads				Straight pipe equivalent to elbow followed by duct, pipe diameters *b*	
	Elbow followed by duct *a*		Elbow discharging to atmosphere (no duct)			
	Round	Square	Round	Square	Round	Square
0.0 *c*	0.95	1.15	.....	.....	.....	.....
0.5	0.83	1.05	1.54	1.95	37	47
0.625	0.55	0.58	1.18	1.25	25	26
0.75	0.41	0.37	0.96	0.87	18	17
1.0	0.28	0.21	0.72	0.54	13	9
1.5	0.24	0.13	0.65	0.35	11	6
2.0	0.21	0.11	0.55	0.29	9	5
3.0	0.21	0.11	0.42	0.22	9	5

a Elbow loss only. Does not include duct loss.
b Based on loss of 1.0 velocity head in 45 diameters of straight pipe.
c Mitre or "stovepipe" elbow.

Table 14. Effect of angle of bend on elbow resistance

Angle of bend, degrees	Relative resistance	
	Elbow followed by duct	Elbow discharging to atmosphere
15	0.18	0.18
30	0.34	0.35
45	0.52	0.53
60	0.68	0.69
75	0.84	0.86
90	1.00	1.00
120	1.27	1.22
150	1.50	1.34
180	1.65	1.42

Table 15. Loss in main at junction with branch *a*

Volume in upstream main/volume in branch = Q_m/Q_b	Loss in main, velocity heads
1	0.20
2	0.17
3	0.15
4	0.14
5	0.13
6	0.12
7	0.11
8	0.10
9	0.10
10	0.10

a 45° tee and equal main and branch velocities. See Table 16 for other angles.

Velocities in dust collecting systems must always exceed certain minima which have been determined by experience for particular materials. These range from 3,000 to 4,000 f.p.m. both for powdered coal and for the usual rock dusts.

Table 16. Effect of angle of junction on tee loss *a*

Angle of junction, degrees	Relative tee loss
0	0
15	0.1
30	0.5
45	1.0
60	1.7
75	2.5
90	3.4

a Apply to Table 15.

Example 1. Design calculations for dust-collecting system. Fig. 36 is a diagrammatic sketch of a simple assembly of hoods and piping for collecting dust at *B* (conveyor junction), *A* (bucket-elevator boot), and *C* (elevator delivery chute and bin) and transferring the dust-laden air to a cyclone for collection. Material is the dust from crushed sandstone.

Conveying velocities are taken as 3,500 f.p.m.

Hoods. Sizes at *A* and *B* are fixed by the dimensions of the boxes; face areas are 4 and 6.5 sq. ft. respectively. A hood of 4 sq. ft. area is placed in a side wall near the top of the covered bin at *C*. All are of canopy type (Fig. 30, item *a*). Velocities at the faces of the various hoods will differ somewhat. The stream of material on the conveyor belt feeding the elevator tends to carry air into the boot, and the rising buckets tend to push this air up on the tight side of the housing, while the enclosed top and bin prevent ready equalization, so that a static pressure is built up in the housing. (A duct is shown connecting the head and boot housings in an attempt to equalize pressures.) Face velocity is taken as 350 f.p.m. in view of this situation. Face velocity at *B* is taken at 275 f.p.m. At *C* it is planned simply to remove enough air to maintain the bin and elevator-discharge chute under a slight vacuum; 1,000 f.p.m. is considered sufficient; face velocity is taken at 250 f.p.m. These values are about double those of Table 10 on account of the relatively heavy dust loadings.

Volumes of air entering the various hoods are, from the fundamental flow equation $Q = AV$: At *A*, 1,400 c.f.m.; at *B*, 1,788 c.f.m.; at *C*, 1,000 c.f.m.

Entry losses. The canopy-type hood has an entry coefficient of 0.82 and an entry loss of $h_e = 0.49h_v$ (Fig. 30).

Required static pressure to produce a velocity of 3,500 f.p.m., assuming complete conversion to velocity head h_v, is $h_v = (3{,}500/4{,}005)^2 = 0.76$-in. water gage (Eq. 25). In order to overcome entry loss there must be a residual static head at this point of $h_v + h_e = h_v(1 + 0.49) = 0.76(1.49) = 1.13$-in. water gage.

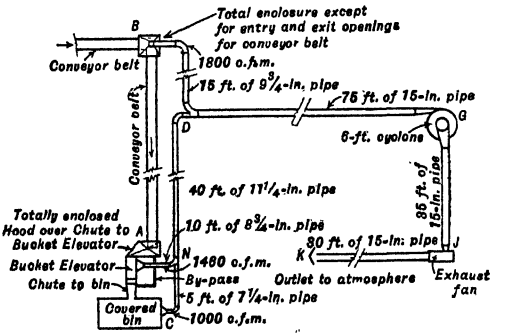

FIG. 36. Layout sketch for simple dust-collecting system.

Pipe areas (velocity 3,500 f.p.m.) are: Branch at A = 1,400/3,500 = 0.40 sq. ft. Corresponding diameter to the nearest 1/4 in. is 8 3/4 in. having an area of 0.417 sq. ft. Similarly the feeder line from *B* requires 0.51 sq. ft. or 9 3/4-in. pipe with an area of 0.518 sq. ft.; and that from *C* requires 0.285 sq. ft. or 7 1/4-in. pipe with an area of 0.287 sq. ft. From *N* to *D* (Fig. 36) the line must carry 2,400 c.f.m., requiring a cross-section of 0.69 sq. ft., 11 1/4-in. pipe, 0.690 sq. ft. area. From *D* to the collector the volume is 4,188 c.f.m., requiring 1.20 sq. ft. cross-section, 15-in. pipe, 1.23 sq. ft. area.

As a CHECK on these calculations, the volume in c.f.m., using Eq. 25 and the entry coefficient and residual static head from above is, for branch *A*: $Q = 0.417 \times 4{,}005 \times 0.82 \times \sqrt{1.13} = 1{,}460$ c.f.m. Similar checks may be applied to the other ducts.

Static pressure against exhauster is the sum $h_v + h_e + h_f + h_c + h_0$ where h_e is entry loss, h_f is the total friction loss through the longest duct line from hood to system outlet ($= ANDGJK$), h_c is the loss through the collector, and h_0 is the loss due to expansion at outlet to the atmosphere. These losses are usually calculated in terms of velocity heads. A summation is shown in Table 17. The exhauster would be selected to deliver 4,260 c.f.m. against a static head of 5.92-in. water gage.

Table 17. Tabulation of static pressures for Example 1

Item	Basis	Duct dimension			Pressure	
		Length, ft.	Diam., in.	Length/ diam.	h_v	In. water gage
h_v	Eq. 26				1.0	0.76
h_e	Fig. 31				0.49	
h_f	Fig. 34				3.88	
Duct *AN*	*a*	10	8 3/4	13.7	0.35	
J'c'n *N*	*b*				0.18	
Duct *ND*	*c*	40	11 1/4	42.6	0.85	
Ell *D*	*d*				0.24	
J'c'n *D*	*e*				0.18	
Duct *DG*	*c*	75	15	60	1.20	
Duct *GJ*	*c*	25	15	20	0.40	
Duct *JK*	*c*	30	15	24	0.48	
h_c	*f*				1.50	
h_0	*g*				0.93	
Total	*h*				7.80	5.92

a From Fig. 35, a length of 8 3/4-in. pipe equal to 45 diameters causes a pressure drop of 1.0 velocity head; hence the drop for 10 ft. (= 13.7 diameters) is $13.7/45 = 0.35 h_v$.

b From Table 15. Take $Q_m = 1{,}460$ and $Q_b = 1{,}000$ (Fig. 36). Then $Q_m/Q_b = 1{,}460/1{,}000 = 1.46$ and h_f (interpolated) $= 0.18 h_v$.

c Method as note *a*.

d Table 13. Assume centerline radius $= 1.5d$.

e Method of *b*. $Q_m/Q_b = 2{,}460/1{,}800 = 1.37$.

f From manufacturer's rating on cyclone.

g Taken as equal to entry loss in a straight pipe.

h $h_v + h_e + h_f + h_c + h_0$.

Sheet metal for ducts. Thicknesses of metal recommended for various pipe diameters and kinds of service are given in Table 18.

Table 18. Recommended thickness of sheet metal and length of lap for round ducts (U.S.S. Gage)

Diameter, in.	Ordinary service *a*	Severe service *b*	Abrasive conveying *c*	Lap, in.
8 and under	24	22	16	3/4
9 to 16	22	20	14	1
17 to 24	20	18	12	1 1/4
25 to 30	18	16		1 1/2
31 to 42	16	14		1 3/4
43 and over	14			2

a Abrasive solids not in dust-collecting quantities.

b Abrasive dust from ore-crushing plants, dry-grinding and pulverizing circuits and foundries. Heavy enough for any exhaust purpose.

c Conveying sand, cement, coal or pulverized rock and abrasive solids at high velocities and in large quantities.

9. DUST-COLLECTING INSTALLATIONS

Lynn Sand & Stone Co., Swampscott, Mass.; rock, gabbro-diorite; capacity, 250 t.p.h.

Summary. Dry crushing from run-of-quarry to concrete aggregate. All equipment enclosed, with drives outside the enclosures and doors to allow entry for service and repair. Enclosures made of plywood; those exposed to weather of WELDWOOD, commonly used for boats.

Details of enclosure, air volumes, and duct diameters are given in Table 19.

Collectors are two Parsons bag-type, shaken down every 2 1/2 hr. Dust is either loaded direct into covered trucks or transit mixers for sale as asphalt filler, or is dumped and wasted. Recovery is 6 or 8 tons per 8 hr.

Table 19. Details of dust-collecting system at Lynn Sand & Stone Co.

Location of suction orifice	Diam. of branch duct, in.	Volume of air c.f.m.
Chute from 48×60-in. crusher into 48-in. bucket elevator	8	1,490
Chute from 42-in. elevator head into top of covered 100-ton hopper	7	1,170
Junction box from 3 gyratory crushers into 42-in. elevator	10 1/2	2,000
Chute from 42-in. elevator head to 2 revolving scalping screens	8	1,380
Two rotary scalping screens and the discharge of oversize into 2 of the above gyratory crushers:		
East	7	1,100
West	7	990
Undersize chutes from the 2 scalping screens into 2 @ 24-in. elevators:		
East	8	1,195
West	8	1,470
Chutes from the above 2 @ 24-in. Elevator heads to 2 rotary screens:		
East	7	1,010
West	7	1,100
Over rotary screens near the point of discharge:		
East	7	790
West	7	1,130
Chutes from crushers into 2 @ 18-in. elevators:		
East	6	610
West	6	865
Discharge from belt conveyors to 4 vibrating screens:		
East	9	1,410
	5	520
West	9	1,440
	5	560
Total		20,230

Utah Copper Co., Magna plant (*153 A 324*).

Apparatus in secondary crushing plant (Fig. 37). Ore from the primary-crushing plant arrives on 2 @ 60-in. inclined conveyors *1*, and is discharged at the top of the secondary-crushing pyramid into bin *2*, distributing to 4 screens *3*, grouped symmetrically about the pyramid axis. Oversize falls through chutes to hoppers *4* over 4 @ 7-ft. cone crushers *5*; undersize drops almost vertically at *6* through a large common surge bin *7*, 26 ft. high and of 10,080-cu. ft. volume, and thence through 2 ore drops *8*, onto 2 @ 54-in. belt conveyors *9*, under the bin. Cone-crusher products also discharge into surge bin *7* through chutes *10*. Free drops in the bin are 11 ft. for crusher products and 26 ft. for screen undersizes. The plant handles as much as 1,700 t.p.h.

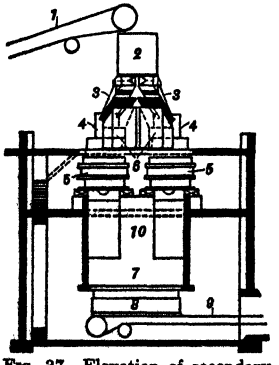

Fig. 37. Elevation of secondary crushing plant at Utah Copper Co., Magna mill.

Collecting system. The falling ore acts as a fan, pushing air downward through the system. Volume of dusty efflux was reduced markedly by closing, as completely as possible, all apertures through which in-

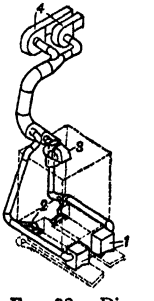

Fig. 38. Diagram of dust-collecting system for apparatus of Fig. 37.

ward leakage of air might occur. Skirted hoods were installed over the head pulleys of the primary conveyors, all chutes and hoppers were repaired and covered, the bins were rebuilt of two thicknesses of wood with tar paper between, and the exhaust ventilating system shown in Fig. 38 was installed. It discharged to a wet scrubber. Air volumes required at various inlets are shown in Table 20. Total of quantities calculated was 57,985 f.p.m.

Table 20. Air required at hoods at Utah Copper Co., Magna plant

Location	Required air flow, c.f.m.
Surge bin	40,000
Front, west ore drop	7,700
Rear, west ore drop	1,300
Front, east ore drop	7,700
Rear, east ore drop	1,300
Total	58,000

Design was made to eliminate dampers on the scores of high wear, unsatisfactory replacement, and tampering. Pipe sizes and elbow radii were adjusted in the calculations to the values necessary to maintain the desired velocities in the various branches. All piping was made in company shops; hence diameters could be specified to the nearest quarter inch. Pipe was made of tank steel, 1/8-in. minimum thickness. Two Sturtevant No. 90 Planovane exhausters were installed in parallel, each with a rated capacity of 29,000 c.f.m. against 6.78 in. of water at 627 r.p.m., requiring 58 b.h.p. each. These discharged into a 10×10×30-ft. wet scrubber, using 1.3 g.p.m. of water per 1,000 c.f.m. of air. The scrubber is operated in excess of 99% efficiency by weight (about 92% by dust count) at a 3-in. pressure drop. All fan calculations and pressure losses were based on 70° F. air at 4,500 ft. elevation.

Hollinger Gold Mining Co. (*42 CIMM 164*). The milling plant comprises 1@ 48×60-in. jaw crusher, on the 2,900-ft. level; a surface plant with 3 No. 7 1/2 gyratory crushers, 3@ 4×16-ft. trommels, 4 No. 5 gyratories, 5@ 62×24-in. rolls, and 7@ 5×10-ft. vibrating screens; and a grinding plant containing 4@ 7×15-ft. wet-grinding ball mills. Capacity of the crushing plant is 420 t.p.h.; that of the grinding plant, 5,800 t.p.d.

The knotty points in the dust-elimination problem were the large volumes of air required, the low winter temperatures, the inability of cyclones to lower dust content to a point that permitted recycle of air in the building, and the difficulty in installing a dusty-air discharge from the primary crusher, located underground. The high-velocity cyclones tested collected almost all >5-μ and a considerable portion of the <5-μ material, but damp dust adhered to the cyclone shell and would not discharge by gravity. Low-velocity cyclones, with an extended cone portion, collected almost all >20-μ material but very little <20-μ. Solution of the problem involved filtering and recirculating in the underground and grinding plants, and operating the secondary-crushing plant unheated, with cyclone and room fans discharging through a 6×135-ft. stack.

Underground installation. The volume of the crusher room was 18,000 cu. ft. Enclosures were built around the feed and discharge chutes; 4,000 c.f.m. was exhausted therefrom and cleaned in a 2,000-sq. ft. bag filter, giving an air circulation of 4.5 min. The dust in the filter was 97% <325-m. and 45% <10-μ. Total dust removed approximated 2 lb. per hr. Velocity through the filter cloth was 2 f.p.m. The filter was shaken once per 24 hr. Filtered air returned to the crusher chamber had a dust count of 70 averaged over 24 hr.

Secondary crushing building. The basic principle followed in design was to enclose all dust-making centers as tightly as was economically possible, create a positive in-draft at all openings, and then exhaust ventilate the room as a whole to remove incidental dust. Enclosures were made large enough with respect to apparatus moving inside or out of them so that fan and piston effects tending to force dust outward were minimized. By-passes were also run from one end to another of housings in which there were strong drafts. Cyclone collectors were installed near and above the points they served so that coarse particles which dropped out of the exhaust streams had slopes upward of 60° to slide back on. In-drafts were set at 200 f.p.m. minimum or 100 f.p.m. excess over the estimated maximum out-draft velocity, whichever was the larger. Piping was designed for velocities of 2,600 to 3,000 f.p.m.: junctions with enclosures were made through conical thimbles giving 1,000 f.p.m. at the face. The cubic volume of the gyratory-crusher building was 152,000 cu. ft.; 11,000 c.f.m. was discharged to the stack from the enclosures, and 30,000 c.f.m. was evacuated by a 72-in. wall fan, making the air-change interval 3.7 min. The volume of the roll building was 420,000 cu. ft.; 27,000 c.f.m. was evacuated through enclosures and 60,000 c.f.m. by 4 @ 42-in. roof fans, for an air-change interval of 4.8 min. About 3 1/2 t.p.d. of dust, averaging 50-μ with a range of 20-μ~100-m. and assaying 0.15 oz. Au per ton is caught in the collectors and returned to the ore stream; the air discharge carries about 600 lb. per day, assaying 0.015 oz., and is all <20-μ.

Grinding plant building was maintained at about 53° F. by the heat produced in the grinding units. The greatest source of dust was the chamber underneath the mill bin where ore was drawn onto four conveyor belts used to feed the ball mills. The belts were housed in at the feed points, and 1,000 c.f.m. was exhausted from each housing. The total combined volume of the chamber under the bin and the conveyor-belt tunnels was 39,000 cu. ft. By exhausting 1,000 c.f.m. from each of the four conveyor-belt housings and 2,000 c.f.m. from the chamber, an air change of 6 1/2 min. was obtained. A total of 6,000 c.f.m. was cleaned through a cloth filter and discharged to the atmosphere in summer, and recirculated to the chamber in winter. Air velocity through the filter was 1.5 f.p.m.

The feed and discharge ends of the ball mill were enclosed as tightly as possible consonant with necessary observation while operating. All enclosures were connected to a fan exhausting 6,000 c.f.m.

The moisture content of this air was too high to permit cleaning in a cloth filter; hence the air was discharged into a 3-ft. stack extending 15 ft. above the plant roof. The stack was constructed of two concentric galvanized-iron pipes with 4-in. space between filled with rock wool. A further 15,000 c.f.m. was discharged from the roof of this building for general ventilation purposes during the summer. Air change in winter was 70 min., at which an inside temperature of 65° F. could be maintained with outside air at 3° F. Air change in summer was 15 min. when exhausting 2,700 c.f.m.

Dust counts (<5-μ particles per cc.) in the roll plant were about 300 with both enclosure fans and roof fans going; 630 with enclosure fans only, against 1,440 in the winter (closed windows) and 1,025 in summer (open windows) without collection; in the underground plant the count was 110 with filter working against 1,400 with no enclosure or collection. In the grinding plant counts ranged from 60 in summer to 135 in winter; filter discharges corresponding counted 28 and 45.

Cost of installation (1938) was: secondary-crushing plant, $39,039; underground plant, $4,300; grinding plant, $15,804.

Other dust-collecting installations are described in Sec. 20, Art. 11, and Sec. 2, Fig. 29.

10. LOW-PRESSURE CONVEYING

All kinds of dry, relatively fine materials can be and are conveyed in dilute admixture with low-pressure air traveling at relatively high velocities. The general principles of design are the same as those applying in dust-collecting systems, but the required velocities are higher (Table 21), dust loadings are greater, friction losses are larger, and greater attention must be paid to wear.

Table 21. Air velocities required for low-pressure conveying

Material	Velocity, f.p.m.
Sawdust	4,000 to 6,000
Metal turnings	5,000 to 7,000
Coal, powdered	4,000 to 5,500
Ash and clinker, ground	6,000 to 8,000
Cement, Portland	5,000 to 8,000
Sand	6,000 to 9,000
Pyrite concentrate	5,000 to 8,000
Phosphate pebble	6,000 to 9,000

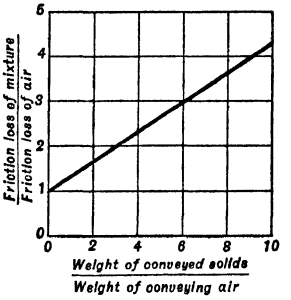

FIG. 39. Friction loss of solid-air mixtures.

Loading ranges from 1 lb. per 80 cu. ft. to 1 lb. per 15 cu. ft.; above the latter figure solid drops out. **The weight** that can be carried varies directly as the square of the velocity. Fine material requires more air per pound than coarse, and dense material less than light.

Friction losses increase with loading and velocity, but within the load range above stated the maximum loss is not more than 8% higher than that with air alone. Relation between loading and loss for grain is given in Fig. 39. The volumetric loading, which, with velocity, is the prevailing factor in determining frictional loss, is, of course, less with material of higher specific gravity; this tends to counterbalance the higher velocities required for the heavier materials.

Design. In general the smallest pipe that will carry the air volume at the required velocity should be used, since carrying capacity of the air increases more rapidly than power consumption. On the other hand the pressure that the fan can build and the high wear rate accompanying high velocities limit the extent to which reduction in pipe diameter can be carried.

Fans or blowers of suitable design are used either as pressure or suction exhausters. Where conveying distances are great, pressure fans may be used in tandem to step up pressure along the system. If material is of such nature that it cannot be permitted to pass through the fan blade, a suction system is used.

Piping should be laid out to avoid sharp bends and sudden changes in diameter, since these enhance abrasion. Use of rubber at points of high wear is increasing.

AIR SIZING

11. INTRODUCTION

Air sizing is the counterpart of water classification in that separation is made between solid particles by reason of differences in rate of movement in air, but it differs to the extent that the operation is invariably free-settling (see Sec. 8, Art 1), and that dif-

ferences in specific gravity are not utilized. In other words, air classification is a sizing rather than a sorting operation.

The basic phenomena employed in air sizing are the same as those used in dust collection, *i.e.*, gravitational movement and inertia. Apparatus utilizes one or the other or both in combination.

Forms of apparatus are shown in Fig. 40.

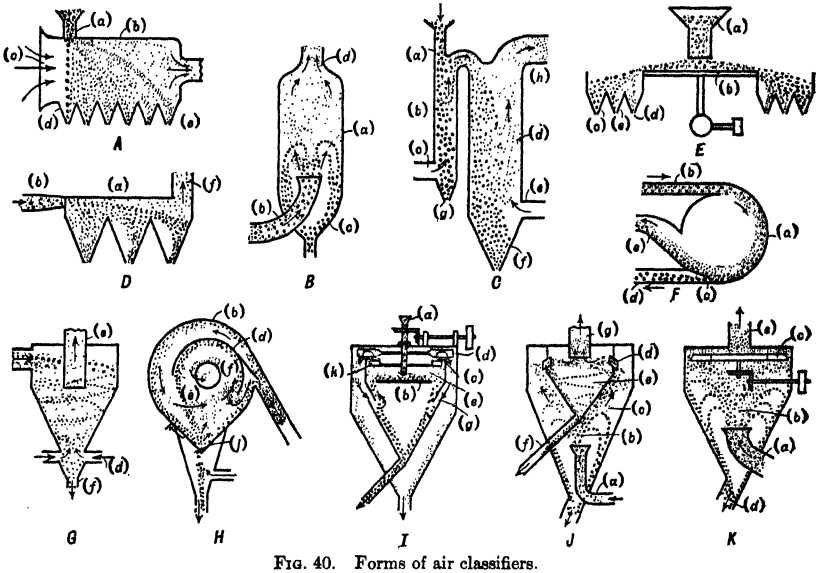

FIG. 40. Forms of air classifiers.

Gravity-type, horizontal current (item *A*). The unclassified mixture enters through hopper *a* and drops vertically into the chamber *b* where it meets a horizontal current of air entering at *c*. Coarse particles drop almost straight down into hopper *d*, whereas the finer particles are displaced horizontally according to their size, the finest being carried away in the outgoing air. The trajectories are, theoretically, the simple resultants of the drag of the air stream and gravity, applied to each particle.

Gravity-type, vertical carrying current (item *B*). Feed enters air-borne through *b*. In classifying chamber *a* the velocity of the carrying air is insufficient to support the coarser particles, and they drop out through hopper *c;* the finer particles rise with the air stream and leave at *d*.

Gravity-type, vertical introduced currents (item *C*). Unclassified material enters through hopper *a* into classifying column *b*, where it meets a stream of air introduced at *c*. The heaviest particles settle and discharge at *g;* the fines pass over into a second larger column *d*, near the bottom of which further air is introduced through pipe *e*. The finest material rises and leaves at *h*, while intermediate sizes drop out at *f*. The number of columns can, of course, be increased.

Inertia-type, rectilinear (item *D*). Air-borne feed enters chamber *a* at relatively high velocity through nozzle-type duct *b*. In *a* there is only a generally turbulent low-velocity current from *b* toward outlet *f*. Hence the trajectories of the particles are determined by their inertias and by gravity. Since all particles were moving at the same velocity on entrance, the coarser have the greater inertia. Gravitational velocities are not greatly different except for the finest sizes, so that the trajectories of the particles with the greater inertia are flatter. Thus the graduation in size shown in the figure is roughly approximated. The finest material is maintained in suspension and carried out through *f*. Item *E* shows an arrangement similar in principle, but with an initial centrifugal impulse applied mechanically by means of whirling disk *b*. Once the material leaves the plate with a relatively large radial component of velocity, its motion is as in item *D*.

Inertia-type, curvilinear (item *F*). Feed enters circular chamber *a* through tangential conduit *b*. The larger, heavier material, having the greater inertia, offers the greater resistance to change of direction and therefore crowds to the wall, displacing the smaller, lighter particles toward the center. While many of the latter resist displacement and are found along the surface, a certain amount of segregation occurs, so that deflection plate *c* divides the stream into a coarser and a finer fraction.

Combination types. Most commercial classifiers utilize both inertial and gravitational motion. In such classifiers it is usual to employ one or the other of the primary motions for a rough separation and then to follow with the other for finishing. Either operation may be supplemented by the impulse of rising air streams.

Centrifugal roughing

Cyclone type (item *G*) comprises a typical cyclone separator (Art. 4) with the rising air whorl fortified by streams of low-pressure air introduced at *d*. The effects are two-fold, *viz.*, to winnow out dust from

the coarse stream approaching bottom discharge *f* and to increase the carrying power of the rising whorl and thus carry over a coarser product than otherwise at *e*.

Volute type (item *H*) uses the centrifugal principle of item *F* for roughing, employing, however, two roughing surfaces *b* and *d*, substantially in parallel. Finishing is done by gravity working against the winnowing impulse of a rising air stream at the throat *j*, and that of the cross stream in the region *e*, as indicated. Fines are carried off by an inner horizontal whorl through pipe *f*. For control of centrifugal force see discussion of Fig. 45.

Mechanical type (item *I*) makes the initial rough separation by inertia as in item *E*, by throwing the feed stream from a whirling disk *b*. The coarse stream is then winnowed in falling over gap *g* by air circulated by fan *d*. The winnowed material is cleaned centrifugally in the whorl set up above *b* by fan *k*. Thus both products are the result of treatments by both methods of separation.

Gravitational roughing

Double-cone type (item *J*). Air-borne feed is introduced in an upward direction through *a*. On leaving *a* the velocity of the carrying current is suddenly reduced by the increase in cross-section of the stream, and coarse material drops out immediately in zone *b*. The material that passes this section is subjected to further sorting in the conical annular space *c*, which may be made of uniform or of decreasing area from bottom to top. At the top of zone *c* the stream flows inward and is deflected more or less tangentially by adjustable vanes *d*, so that a cyclone is set up in *e*. Fines discharge through *g* and an intermediate granular product drops out at *f*. No air other than that in the feed stream is used.

Mechanical type (item *K*). Air-borne feed is introduced with upward velocity through *a*, suffers gravitational roughing without additional air in zone *b*, the fines are set into whirling motion by fan *c*, and further coarse material is shaken out centrifugally and joins the roughed-out coarse material discharging from spout *d*, while the cleaned fines leave by pipe *e*.

Flowsheets involving classifiers. Air classifiers normally make two products only, a coarse and a fine. If three sized products are wanted from one stream, it is necessary to use either two classifiers or a classifier and a screen. Several arrangements are shown in Fig. 41.

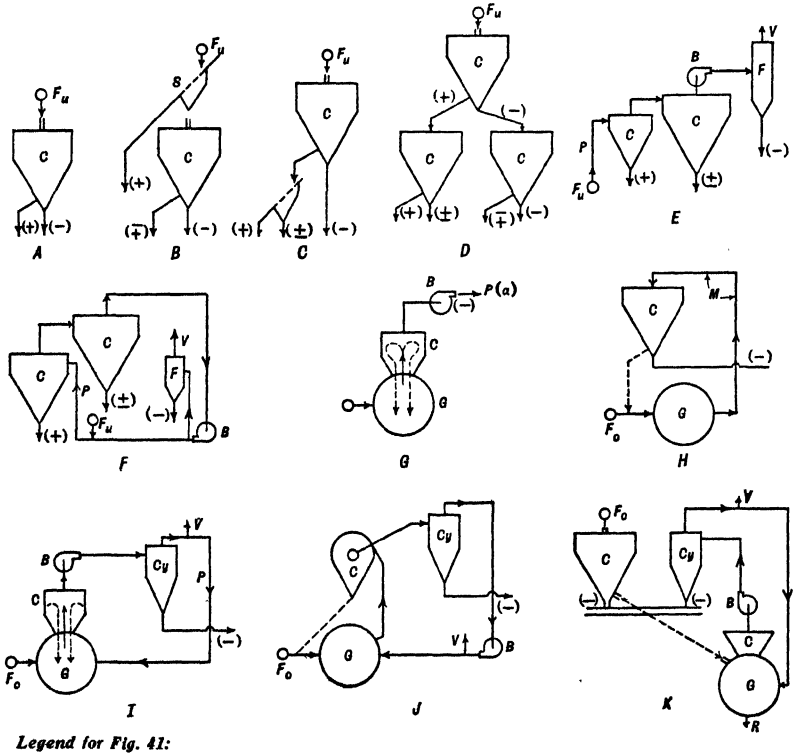

FIG. 41. Flowsheets for air-classifier circuits.

Item A. This is the fundamental single-classifier flow, where a stream of mixed sizes is broken into a coarse (+) and fine (−) product.

Item B shows a screen-classifier combination, in which the coarsest material is scalped off by a screen and the screen undersize (comprising improved classifier feed) is split into an intermediate (±) and fine product by the classifier.

Item C is the inverse of item *B*, the classifier scalping out fines, and the screen separating the classifier oversize into a coarse and intermediate fraction. Its principal use is when screening is necessary for making two granular products, and fines in the feed blind the screen cloth.

Item D is a 3-classifier arrangement which serves to clean up the coarse and fine products, and gives two intermediate products having size distributions somewhat different from the usual run.

Item E illustrates an arrangement that can be used to produce an ultrafine product once through from a long-range feed.

Item F is similar to item *E* but involves handling much less air through the filter. Only 2 to 20% of the air is vented, according to the amount of moisture in the feed and the temperature of the air. For a given combined moisture content in the feed and new air, a higher temperature must be maintained in item *F* than in item *E*, but fuel consumption is not necessarily higher in *F*, since less heat is carried away in vented air.

Item G represents a closed grinding circuit, commonly used for unit firing with bituminous coal. The classifier *C* is combination-type with gravity roughing.

Item H is a closed grinding circuit using a mill without air sweeping, and mechanical means to deliver mill product to a combination-type centrifugal-roughing classifier. This flow delivers a nonaerated product in contradistinction to the flow of item *G*.

Item I is a variant of item *G* to the extent that a collector receives and de-aerates the classifier fines, and that collector gas is recirculated to the mill, less a small amount of vented gas, moisture, and ultrafine solid.

Item J is similar to item *G*, but differs in that the grinding mill is air-swept, conveyance is pneumatic but the coarser material does not pass through the fan, and the product is de-aerated.

Item K is the same as item *I* except that fines are scalped out of the mill feed by the feed classifier and combined with the product of the grinding-mill classifier. This is a useful arrangement with a feed already relatively fine, which tends to pack and cushion in the mill.

The differences in method of conveying, and, in pneumatic conveying, in the location of the fan, as shown in these flowsheets, may be important from the standpoint of space requirements and wear of fans, but do not affect classification materially.

Floating velocity. The air velocity required to float a particle when the current as a whole is vertically upward is usually different from that at which the particle settles in still air, and both are different from the velocity necessary to transport the particle when a major component of the current direction is horizontal, as in cyclone-type apparatus. (See Eqs. 6, 7, 14, 15.) Few data are available for either floating or conveying velocities for specific materials of definite sizes. Croft (*Thermodynamics, Fluid Flow and Heat Transmission*, McGraw-Hill Book Co., 1938) gives a few values from which the following are selected. ***Floating velocities,*** f.p.s.: COAL: 300-m., 0.5; 100-m., 3; 50-m., 10. COKE: 20-μ, 0.3; 150-μ, 2. SAND, FOUNDRY: 9; RIVER: 14. SPHERES, 62 lb. per cu. ft. struck volume: 0.79-in., 72; 0.36-in., 48. 125 lb. per cu. ft.: 0.79-in., 100; 0.36-in., 69; 187 lb. per cu. ft.: 0.79-in., 125; 0.36-in., 84. SPHALERITE: 0.08-in., 58.

Croft's velocities for conveying are of the same order as the lower ends of the ranges in Table 21. Martin's values for quartz of different sizes are given in Fig. 1. See also Table 1.

Temperature. Martin (*26 Cer S 21*) notes that the supporting power of gases increases with their temperatures; thus the diameter of particles supported at 1,000° F. was 1 1/2 times that of particles supported at 60° F. by a current of the same velocity.

Table 22. Separation factors for cyclones

(Outer vortex velocity, 60 f.p.s.) (*37 CME 630*)

Diameter of cyclone	Separation factor (times gravity)	
	Outer vortex	Inner vortex
20 ft.	11.3	90
10	22.4	179
5	45	358
2	112	896
1	224	1,790
8 in.	336	2,690
5	538	4,300
4	672	5,380
3	896	7,170

12. COMMERCIAL CLASSIFIERS

Practically all modern air classifiers utilize both inertial and gravitational forces in a combination in which the relative strengths of the two kinds of forces are adjustable as part of the regular operation. The machines which are built and operated as separate units do the roughing by inertia, since inertial forces, engendered centrifugally, are much greater than gravitational (see Table 22), and consequently are more rapid, give a wider range of adjustment, and permit use of smaller apparatus. On the other hand, the majority of built-in classifiers utilize

gravitational roughing because such utilization is effected by simple increase in the intensity of air sweeping, and further because of mechanical difficulties in joining the grinding mill and a classifier of the centrifugal-roughing type in one apparatus.

Classifiers utilizing centrifugal roughing

These machines, ordinarily called MECHANICAL-AIR CLASSIFIERS, are illustrated in principle in Fig. 40, item *I*. The essential parts are: (*a*) a mechanical device for effecting the primary inertial differentiation, (*b*) a circulating fan and means for separate presentation of the two fractions roughed out in (*a*) to the fan stream for gravitational sorting, (*c*) an auxiliary inertial separator for a second working over of the finer fraction, and (*d*) draft regulators and deflectors for controlling the strength and direction of the air stream. The Gayco centrifugal, Raymond Whizzer, and Sturtevant Whirlwind classifiers are typical.

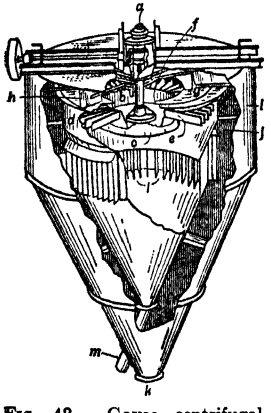

FIG. 42. Gayco centrifugal classifier.

Gayco centrifugal classifier (Fig. 42) is fed at *a* through a hollow shaft *b* which delivers to a whirling disk *c*, bolted to the shaft. Material is thrown from *c* by centrifugal force, and in the space between the rim of *c* and the wall of the inner cone *d* it encounters a rising current of air. The larger, heavier material, having the greater inertia, travels in a roughly horizontal direction until it meets the wall of the cone, where it is largely out of the air stream and can slide downward under the action of gravity. The material small and light enough to be lifted by the rising current travels upward with it and, with it, is thrown into a vortical whorl by the blade-type fan *e*, mounted as shown on shaft *b* above disk *c*. The coarser material in the rough fines is here thrown out by centrifugal inertial forces and falls down along the wall of inner cone *d* to join the coarse initially shaken out. The remaining fines travel on with the rising air stream through central opening *f* in horizontal shutter *g* into the feed zone of an upper fan with blades *h* mounted on arms carried on a hub on shaft *b* as shown. In this upper zone the fine material is largely thrown

Table 23. Catalogue data for Gayco classifier (*after R. M. Gay, PC*)

Diam., ft. *a*	2 1/2	8	10	12	14
Motor, hp	1 1/2	7 1/2	15 to 20	20 to 25	25 to 40
Material	Capacity, t.p.h. *b*				
Limestone and talc					
82 to 85% <200-m	0.25	3	6	9	12
95% <200-m	0.15	1.5	2.5	3.8	5
99.5% <200-m	0.11	1	1.25	2	2.5
99% <300-m	0.09	0.5	0.75	1	1.5
Coal (anth. and bit.)					
75% <200-m	0.20	3.3	5	7.5	10
90% <200-m	0.15	2.5	4	6	8
Feldspar and silica					
95% <100-m	0.18	2.5	4	6	8
99.5% <140-m	0.12	1	1.25	2	3
99.5% <200-m	0.10	0.75	1	1.5	2
99% <300-m	0.05	0.38	0.5	0.75	1
Slate and barite					
95% <100-m	0.15	2	3	4.5	6
95% <200-m	0.12	1	1.25	2	3
95% <300-m	0.10	0.75	1	1.5	2
99% <300-m	0.05	0.38	0.5	0.75	1
Graphite (clean)					
90% <200-m	0.08	0.5	0.75	1	1.5
99% <200-m	0.04	0.25	0.38	0.5	0.75
Phosphate rock					
90% to 95% <100-m	0.35	3	6	9	12

a Other sizes available are 3-, 4-, 5-, 6-, 16- and 18-ft. diameters, with motors ranging correspondingly from 1.5- to 100-hp.

b Moisture content <1%.

to the wall of outer cylindro-cone *i* and travels down, assisted at first by the down-turned stream of air in the annulus *j*, until it reaches an outlet valve at *k*. The main stream of circulating air turns inward through vanes *l*, being denied egress at *k*, and then, being further denied egress at *m*, turns upward. The combined stream of primary and secondary coarse material, leaving the lower edge of cone *d*, falls across this inward upward air stream, and the fines are winnowed out and carried on upward as previously described, completing the circulating path. The cleaned coarse material falls down the walls of the inner cone and discharges through a suitable valve at *m*. The adjustments in this apparatus are the speed of shaft *b* and the opening *f* in the diaphragm damper *g*, the former controlling the inertial forces, the latter the gravitational.

Sizes, power requirements, and capacities, as rated by the manufacturer, are given in Table 23.

Raymond Whizzer classifier (Fig. 43) is like the Gayco in general construction and operation. It differs in details and in methods of adjustment. In the form shown (DOUBLE-WHIZZER TYPE) there are two whizzers or separator fans *a*, which serve to intensify the secondary inertial treatment of the fine material. The conical rims *b* surrounding the tips of the fan blades impart a downward component to that part of the coarser material that is thrown out in the planes of the fans. Whirl is controlled in the whizzer zone to a certain extent by the slide dampers *c*, controlled from outside the shell, a number being spaced around the inner-cone periphery directly above the fans. In the single-whizzer form the aperture below the circulating fan *f* is adjustable by means of sliding plates actuated by screws projecting through the housing.

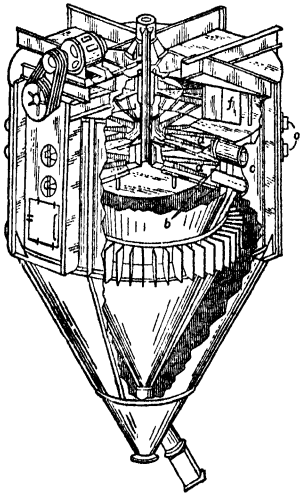

FIG. 43. Raymond Double-Whizzer classifier.

Catalogue data are given in Table 24.

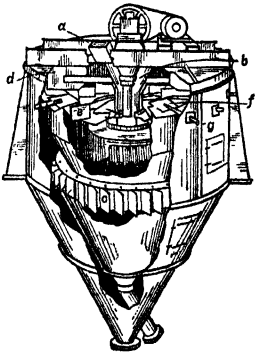

FIG. 44. Sturtevant Whirlwind classifier.

Sturtevant Whirlwind classifier (Fig. 44) differs from the two machines of the same general type previously described in that the feed is introduced through a hopper *a* into a chute *b* surrounding the drive shaft, and that the vanes *c* are set at an angle to the radii. Adjustments are speed, radius of upper fan *d* (by moving the blades

Table 24. Catalogue data for Whizzer classifiers (*after Raymond Pulv. Div., Combustion Eng. Co., Inc.*)

Material and type of classifier		Portland cement *a* Double-whizzer type		Raw cement mix *b* Single-whizzer type	
Diameter, ft.	Vertical shaft, r.p.m.	Capacity, bbl. per hr. *c*	Motor, hp.	Capacity, t.p.h.	Motor, hp.
4	400	5	10	1.5	7.5
6	350	12	15	3	10
8	275	30	25	9	15
10	250	50	40	12	25
12	225	75	50	18	30
14	200	100	75	26	50
16	185	150	100	37	75
18	165	190	125	48	100

a Based on a separator feed of 65% <200-m. (900 sq. cm. per gm.) and separating the finished cement to 97% <200-m. (1,800 sq. cm. per gm.).

b Based on a separator feed of 60% <200-m. and separating the finished raw mix to 90% <200-m. and approximately 99% <100-m.

c 376 lb. per bbl.

on the arms), number of blades *e* on the lower fan, and area of top opening, which is varied by moving plates *f* by means of rods *g*. The nature of such adjustments has been discussed in connection with Figs. 42 and 43.

Sizes and power consumption may be approximated from Tables 23 and 24.

Hardinge Loop classifier (Fig. 45) is of the inertial-roughing type, but the inertial effect is generated by tangential introduction of feed through nozzle-shaped pipe *q* into the voluted horizontal semicylindrical chamber *d*. Damper *k* permits distribution of initial feed between the outer and inner volutes, and the position of that damper also controls the centrifugal effect, since the larger the fraction split into the inner space *t*, the lower the velocity in the outer volute. The counterflow through *t* from *k* may be increased to the point that inertial effects disappear. The coarser material concentrates in the air layer next to the walls *d* and *l*, due to the centrifugal action of the swirl. The coarsest material travels down over slide *f* and, at throat *r*, is met by a current of air rising through *h*, which winnows out fines and carries them up again into the inner volute for reworking. The intensity of this action is controlled by volume control at damper *j* and/or by cross-sectional area at *r* determined by moving *f* by screw *g*. Material suspended in the outer volute and falling from edge *s* of the inner volute, is subjected to a certain amount of gravitational settling in zone *t*. Centrifugal force being higher in the inner volute, the suspended material is robbed of further intermediate coarse material therein. The fine material, still suspended, leaves with the air through central outlet *m* and passes thence, through pipe *n* to collector *o*. Winnowed coarse material discharges through pipe *u*. The floated product is finer the larger the centrifugal effect.

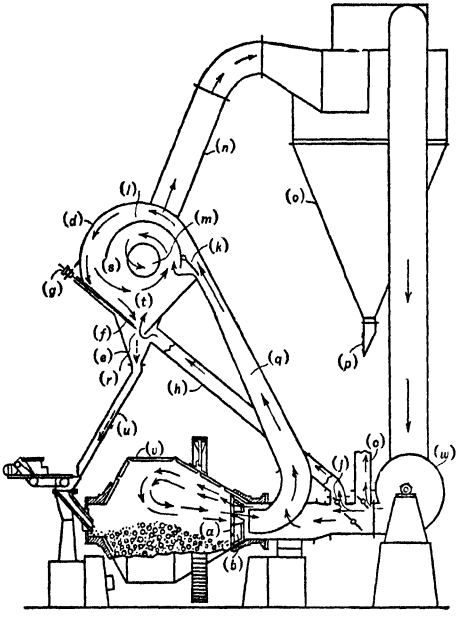

FIG. 45. Hardinge Loop classifier.

In the set-up shown, the classifier is operated in closed circuit with tumbling mill *v*. Circuit air blown in by fan *w*, which takes suction on collector *o*, sweeps the free space generally above the load in the mill, as indicated by the arrows (REVERSE-CURRENT CLASSIFICATION), and carries the finer material with it in suspension into feed pipe *q*. Trough-type lifters *b*, behind grates *a*, also pick up material discharged through the grates

Table 25. Hardinge Loop classifier

Diameter, loop, ft. *a*	Horsepower to classify and elevate product 30 to 50 ft.	Capacity at fineness specified, t.p.h. (assuming approx. 1% remaining on stated mesh) *b*				
		20-m.	65-m.	100-m.	200-m.	325-m.
1	1	0.4	0.2	0.15	0.12	0.08
2	3	2.4	1.2	0.5	0.4	0.3
3	7 1/2	3.5	1.7	1.3	1.0	0.7
4 1/2	15	7	3.4	2.0	1.6	1.0
6	30	14	7	4.0	3.0	2
9	60	28	14	10	8.5	6
10 1/2	100	48	24	18	14	10
12	125	60	30	22	18	12
14	200	90	45	34	27	20

a Outer volute.

b Based on nonpacking material of 2.6 sp. gr.; subject to variation, owing to temperature, moisture, elevation, nature of material, and local conditions.

in normal fashion (Sec. 6, Art. 3) and shower it across the outgoing stream. Air from the blower outlet is bled off through *h* as needed, via damper *j*, to supply the necessary rising current at *r*. Pipe *c* is a vent to relieve the system of moisture and excess air; make-up air comes in with the mill feed; the quantity is regulated by dampers at the fan discharge.

Catalogue data are given in Table 25.

Classifiers utilizing gravitational roughing

These classifiers are characteristically, although not necessarily, built integral with grinding mills, being set directly above the grinding zone.

Double-cone type (Fig. 46) comprises inner and outer cones *e* and *d* respectively, the inner hung in fixed position with respect to the outer, with communication between the two effected via shuttered openings *b*. In operation, the lower cone is mounted over a space in which solid is in semisuspension in air, as *e.g.*, the grinding zone of a medium-speed

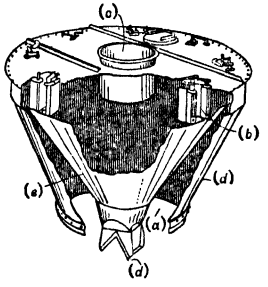

FIG. 46. Double-cone classifier.

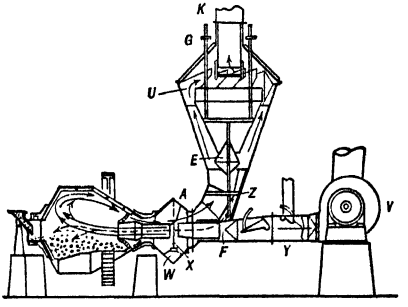

FIG. 47. Hardinge Superfine classifier.

fixed-path mill (Raymond, Williams, etc., Sec. 6, Art. 2), and forms the outlet for the air stream. This stream, carrying suspended solid, rises through annular space *a*, roughing out more or less of the coarsest material as it does so, and moves on upward to the top and thence through adjustable vanes *b* which are set at an angle so as to produce a cyclonic whorl in the inner cone. Here a second, inertial classifying action takes place, the heavier material being thrown to the walls of the inner cone and discharging through *d* back into the crushing zone, while suspended fines travel with the air stream through central top exit *c* to a collector, furnace, or the like.

Hardinge Superfine classifier (Fig. 47) is of the double-cone type, modified to permit reworking of the inertial granular product by gravitational winnowing before return to the grinding zone. As shown in the figure for use with a tumbling mill, classifier feed is swept from the mill by reversing air currents from blower *V*, and is subjected to a preliminary roughing in the revolving double-cone enlarged zone *A*, attached to the mill trunnion, wherein coarsest material is dropped out by reason of the velocity reduction. Oversize dropped in *A* is lifted by radial vanes *W* and showered across break *X* in air-inlet pipe *Y* and is carried back into the mill. The remaining material, in suspension, is conveyed through pipe *Z* to the bottom of the intercone space, dropping out further coarse material, which falls back into pipe *Y* at *F* and is swept thence back into the mill. The double-cone action is the same in principle as described above, but vanes *U* are stationary, and increase in angularity from bottom to top, while the inner cone is suspended and adjustable vertically through hand wheel *G*. Elevation of the inner cone has two effects: (*a*) it increases the cross-section of the intercone space, thus decreasing rising velocity and dropping out finer material; (*b*) it raises the point of inflow of air to the spiral vanes *U*, thus effecting a more tangential introduction at higher velocity, so that finer material is thrown out in the inner cone, the result being a finer discharge through pipe *K*. Double cone *E*, which moves with the inner cone, produces a Venturi effect, which aids efflux of the cone discharge; the solid, dropping off the periphery of this cone, is given a final gravitational working by the incoming air stream. A sliding seal between *A* and the lower end of *Z* makes junction between rotating and stationary parts of the system.

SIZES are from 1-ft. to 12-ft. diameter, **POWER CONSUMPTION** correspondingly from a fraction to 125 hp., and **CAPACITIES** from a few pounds to 50 tons per hr. of finished product.

Mechanical type of gravitational-inertial classifier is shown in Fig. 48. As pictured, it is working in conjunction with a hammer mill *h*, fed at *i*, and air-swept by recycled air entering at *a*, and leaving via suction pipe *f* of circulating fan *g*. Gravitational roughing takes place in chamber *b*, where the coarsest material settles out of the rising current.

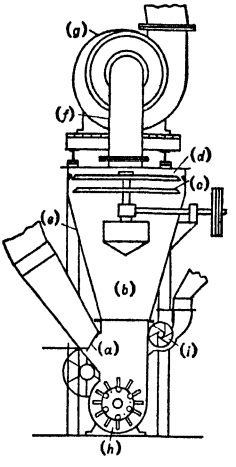

FIG. 48. Mechanical type of gravitational-inertial classifier.

Centrifugal classification drops out further granular material in the whirling zone set up by the thin-bladed fans *c* and *d*, the material dropped out returning to the crushing zone down the walls of the steep-sided cone *e*. Discharge is to a separator whence denuded air comes back to *a*. Fans *c* and *d* are driven by a variable-speed motor, thus controlling precipitation.

Fan speed. The effect of speed variation on product is shown in Fig. 49. The relation between fineness of product and capacity is shown in Fig. 50.

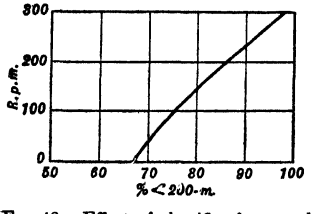

FIG. 49. Effect of classifier-fan speed on fineness of product.

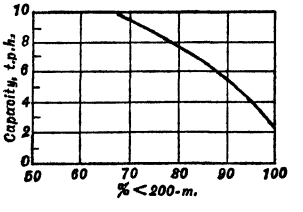

FIG. 50. Relation between fineness of air-classifier product and classifier capacity.

SECTION 10

WASHING AND SCRUBBING

ART.		PAGE
	SCRUBBING	
1.	Principles of scrubbing	01
2.	Jet scrubbing	02
3.	Tumbling scrubbers	03
4.	Stirring scrubbers	04
5.	Sand scrubbing	08
	WASHING	
6.	Screening washers	08
7.	Classifier washers	10
8.	Miscellaneous scrubbing and washing	16

Scrubbing and washing are the counterparts of crushing and concentration respectively, as applied to the treatment of crudes which are geologic residuals. Such crudes normally comprise rock that is more or less unconsolidated, in which the important mineral species differ markedly in grain size and bulk hardness. Particle size alone is ordinarily, but not necessarily, the property upon which separation is based. Water is the usual separating medium, but air is sometimes used. The names carry over from parallel familiar household activities and imply the same actions, *viz.*, soaking, rubbing, pounding, agitation, spraying, and the like in the presence of water, and removal of the water from the larger solid, carrying the smaller solid in suspension. By these means clay is washed from harder and more coarsely crystalline minerals and rocks generally; sand from aggregate, fine sand from coarse sand, loam from fine sand; sand from shell; decomposed blue-ground from diamondiferous sand and gravel; silica sand from lump hematite, phosphate, barite and the like; and slimy limonite from associated granular material.

SCRUBBING

Definition. Scrubbing is disintegration effected by forces which are relatively light, judged by ordinary standards of comminution, but are sufficient to break down soft unconsolidated material such as clay, or to sever the bonding brought about between grains by precipitates of salts and the like. Scrubbing is usually effected by rubbing the larger and harder grains together, as by tumbling the mass, but in some cases the force of a water jet playing against a mass of crude backed by a rigid surface is sufficient. Scrubbing normally precedes washing, but the two may proceed simultaneously.

1. PRINCIPLES OF SCRUBBING

The materials to be scrubbed, the form and character of the material to be removed by the scrubbing, and the results demanded determine the method and apparatus to be employed. If, as in the preparation of lump limestone for burning in shaft kilns, the finished material is the lump stone and the impurity to be washed away is adhering clay picked up in quarrying, the method indicated is one in which the lumps of relatively hard stone are rubbed against each other in the presence of water; the degree of tumbling required depends upon the resistance of the clay to disintegration and upon the purity demanded. If the clay is tough, adhesive, and water resistant, and if standards of purity are high, the stone must be tumbled until most of the surface concavities are eliminated, since only thus can such clay be removed. On the other hand, the clay bonding in many so-called cemented gravels containing well-rounded smooth boulders may be removed by even such light rubbing as is involved in passage through chutes and over vibrating screens, particularly if subjected to vigorous sprays. In general the smaller the fragments to be scrubbed the more irregular their surfaces, and the softer they are the more difficult it is to scrub them.

Materials subjected to scrubbing may be classified on the basis of the form of the soft component, since this determines the method of scrubbing. NODULAR MATERIALS are those in which the harder grains, ranging in size from very small to massive, are

scattered through a matrix of clay or clay-bound sand. The important characteristic of this type of material from the standpoint of scrubbing is that the material to be disintegrated is massive and frequently tends to form rounded lumps (CLAY BALLS) which are highly resistant to disintegration. CEMENTED MATERIALS are those in which the harder particles predominate, but in which there is sufficient intergranular cementing material to form a substantially continuous interstitial filling; cemented gold gravels and some tin gravels are typical. COATED MATERIALS are usually fine grained, relatively unconsolidated, but coated, and, perhaps, lightly cemented, by films of decomposition products, precipitates such as iron oxides, and the like.

Methods of scrubbing are (1) jet-impact, (2) tumbling, (3) stirring. Each may, sometimes advantageously, be preceded by soaking. Additionally, in difficult cases, modifications of standard methods of crushing and/or grinding are employed.

2. JET SCRUBBING

Jet-impact scrubbing is used for primary disintegration of both nodular and cemented crudes, and in final scrubbing of gravelly aggregates and, less frequently, of sands. The underlying principle is subjection of the solid to the mechanical impulse of the jet, at the same time supporting it against a rigid or semi-rigid backing so as to utilize as much of the jet energy as possible in setting up internal stresses in the lump, rather than in effecting transport. The size and velocity of the jet to be employed depend upon the size of the material and the method of backing. If the lumps move as a mass under the impulse of the jet, energy is being wasted. If the material being jetted is submerged, so that a part of the force of the jet is expended in moving the submerging water, energy is again wasted. If the material is moving toward the jet as it is struck thereby, the force of the impact is increased. It follows that jet scrubbing is most effective when material is held in place, as in a gravel bank sufficiently steep to permit rapid runoff of water, or when it is moving down a steep chute (again permitting rapid runoff), or is supported on (and preferably moving toward the jet over) a rigid perforate surface.

Hydraulicking is employed in mining many nodular crudes and cemented gravels and sands, not only because such excavation and transport are relatively cheap, but also because the full impact of powerful jets can thus and only thus be brought to bear on the finer sands. For methods and costs of hydraulic mining see *Peele;* for sluicing see Sec. 11, Art. 26.

Monitors are nozzles, usually 1-in. diameter or larger, supplied with water at pressures of 50 to 150 lb. per sq. in. and upward. They are used in the plant on lump crudes of nodular or cemented character, the crudes normally being supported on a grizzly sloping toward the nozzle stand. A typical simple arrangement is shown in Fig. 1 (*21 IMM 230*).

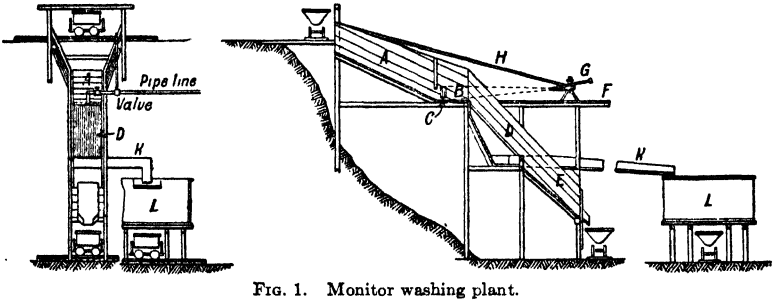

FIG. 1. Monitor washing plant.

The ore was delivered on an upper track, dumped into a chute *A* and brought to a washing platform *B*, where it was disintegrated by means of a stream from a nozzle *G*. Disintegrated material flowed over a grizzly *D*, washed oversize was collected in a bin *E*, and undersize flowed through launder *K* to a settling tank *L*. See also Sec. 2, Fig. 135.

At CHARLESTON MINING Co., Mt. Pleasant, Tenn. (*44 #9 RP 37*), clayey muck from steam-shovel mining is disintegrated on a grizzly with 110-lb. water from hydraulic guns, adding 1,500 g.p.m. (for 125 t.p.h. of solid); grizzly undersize then passes to an 8×25-ft. blade mill and thence to 3/16-in. Low-head screens.

A modification of monitor scrubbing was used at MONROE SAND & GRAVEL Co., Monroe, La. (*41 #9 RP 46*). A cemented gravel containing about 20% clay was excavated by steam shovel and transported by side-dump cars to the shore of a lake, where it was dumped. A header with a plurality of

jets under 25-lb. pressure was carried along above the dump, and the dump was washed into the lake by the jets. The material was then picked up by a suction dredge and washed and sized in the usual fashion (Sec. 3, Art. 38). The lake served both for storage and to soften and disintegrate small lumps of clay by soaking.

Water consumption for jet scrubbing is substantially impossible to estimate. A 1 1/2- or 2-in. monitor under 60- to 100-lb. pressure will effect rough disintegration of a relatively large tonnage of material per hr., sufficient to permit passage through a 1 1/2- or 2-in. grizzly, and the water therefor is readily calculable, *e.g.*, for a 2-in. nozzle at 100-lb., 1,100 to 1,200 g.p.m. is required. Thus if extensive monitor scrubbing is contemplated, a large supply of cheap water is necessary.

Jet scrubbing on screens. See Art. 6.

3. TUMBLING SCRUBBERS

Tumbling scrubbers are rotatable cylindrical shells, set more or less horizontally, with end closures sufficient to maintain a body of liquid within them, and with internal projections that serve to tumble the load on rotation. They operate, usually, at speeds well below critical (Sec. 5, Art. 2) and thus depend for their scrubbing action primarily on rubbing between the lumps of hard material in the feed, supplemented by such impact as occurs in cascading (see Sec. 5, Art. 2). At the usual low speeds the forces are insufficient to break material as soft as the ordinary pebble phosphates, but may disintegrate barite (Sec. 3, Art. 3) or nodular manganese oxides. Ordinary clays disintegrate relatively completely, if the harder material is 2-in. lump or larger, and the pulp is kept thin; tough clays, small lump, and thick pulps all tend toward the production of clay balls, which tend to float through without disintegration. The remedies are higher speeds to cause definite cataracting, introduction of a light load of steel tumbling media, and thin pulp; one or more being applied according to circumstances.

Drum scrubber in its simplest form (Fig. 2) is a cylindrical welded-steel shell, 5 to 7 ft. diameter by 8 to 25 ft. long, with plane or conical ends. It is mounted, with axis horizontal, on tires and rollers, and revolved 10 or 12 r.p.m. (170 to 190 f.p.m. peripheral speed) by spur gear. It is lined with chilled cast-iron or manganese-steel blocks, usually in alternate courses of smooth and lifter types, the lifters being set at an angle so as to both elevate and convey settled material from feed to discharge end. Water and suspended fines flow through, either concurrent or countercurrent, by reason of difference in diameter of feed and discharge openings. Lifters of spiral or radial types on the discharge head *a* may be used to lift the scrubbed rock to the discharge opening (see Sec. 5, Art. 8). Weight complete is from 20,000 to 85,000 lb. over the size range 5×8- to 7×24-ft.

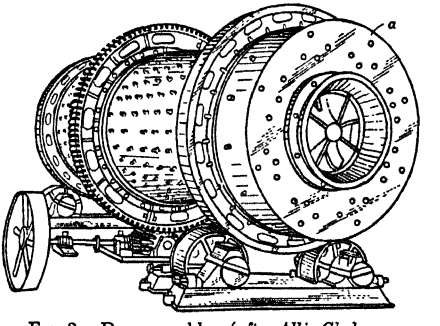

FIG. 2. Drum scrubber (*after Allis-Chalmers Mfg. Co.*).

Operating conditions. FEED SIZE for standard construction is usually 4-in. limiting. Larger lumps, 6- to 10-in., require larger feed and discharge openings and redesigned discharge-head lifters. CAPACITY is a matter of conveying rate, which depends upon the projection and inclination of the lifters and upon the coarseness of the feed. Manufacturers' ratings for 5-ft. drums are 20 to 75 t.p.h., for 6-ft. from 75 to 125 t.p.h., and for 7-ft. from 200 to 300 t.p.h., the lower values at each size corresponding, of course, to the higher and tougher clay contents of the feeds. POWER CONSUMPTION varies with the amount and specific gravity of coarse material in the feed, and upon the hardness of the sand and its resulting tendency to lift the load. Motor sizes recommended range from 10-hp. for a 5×8-ft. drum to 40-hp. for a 6×20-ft. and 125 hp. for the 7×24-ft. size. WATER CONSUMPTION depends upon the service, but is roughly within the range of 1 to 4 tons per ton of solid feed.

Blade mill; paddle mill (Fig. 3) is essentially a drum-type conflow scrubber with log-washer teeth *a* of adjustable angularity (Art. 4) and without an inside wash spray. In one form, it is trunnion-mounted, with trunnions capable of passing 12-in. lumps, and is fitted with a large gravity-feed hopper, a lifter-type discharge for coarse material, and a trunnion drum (see Fig. 4) having annular retaining rings to aid in maintaining level with a surging feed. It is built in the belief that the higher blades (as compared with the simple drum-type scrubber) will be more effective in disintegrating clay balls, by reason

of a cutting action; and that control of time-factor may be effected by adjustment of the pitch of the blades. Sizes are 6- and 7-ft. diameter by 16- to 30-ft. length. Performance data are not available but makers' ratings are 200 to 300 t.p.h.

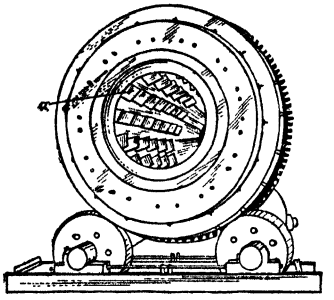

FIG. 3. Blade mill (*after McLanahan & Stone Corp.*)

Cone-ended scrubber is a cylinder with 30° conical ends and spiral lifters carried up into the discharge-end cone to aid in discharging coarse material. It is effective for easy scrubbing, such as for lump limestone; it is doubtful whether it would be effective for difficult work.

Super-scrubber is used for refractory feeds that require intense tumbling for disintegration. LIFTERS are given more projection and the inclination toward the discharge end is decreased or eliminated. SPEED is increased to between 80 and 90% of critical so that there is much cataracting of the charge. POWER requirement is thus more than doubled. CAPACITY is decreased by reason of the decrease in conveying thrust. More good rock is crushed and broken. The machine should be heavier and more rugged generally to withstand the heavier duty.

Counterflow scrubber is designed to remove clay and fine sand from gravel and stone during the scrubbing operation. One form is shown in Fig. 4. It comprises a cylindrical shell with dished ends, trunnion mounted, with cylindrical axis horizontal. The feed end is lined with spiral lifters *a* directed toward the discharge end, so that material is heaped up beyond the inner ends of the lifters and thereafter flows by gravity to and through the discharge trunnion. The remainder of the cylinder is lined with lifter liners *b*, the ridges *c* parallel to the shell axis. A grate *d* at the feed end forms a perforate annulus around the feed chute, holding back the coarser material, but permitting egress of fines. Liquid flow toward this end is induced by making the diameter of the discharge opening smaller than the outside diameter of the grate and feed-trunnion opening. Spray pipe *e* with deflector jets (Fig. 9) projects into the discharge end as indicated. Speed is such that, with the lifters, the load is largely cataracted, and the low-level discharge minimizes cushioning. Counterflow acts to decrease in-load cushioning by removing much fine material shortly after entry; it also does final washing of product with the cleanest water. Usual diameters are 5 to 7 ft. and lengths from 1- to 1 3/4-times diameter. Outside screen (TRUNNION TROMMEL) *f*, bolted to the discharge spout, is used when close sizing of coarse products is unnecessary.

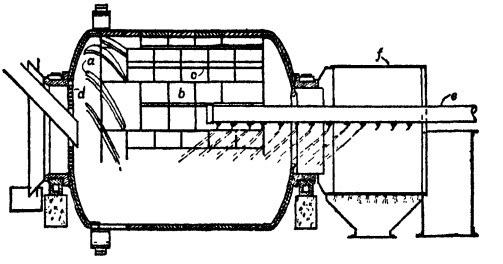

FIG. 4. Counterflow scrubber (*after Allis-Chalmers Mfg. Co.*).

In another form, with plane instead of dished ends, a chute projects adjustably into the discharge opening and the lifters are carried to the end of the shell; the combination serves to elevate and drop scrubbed material into the chute, and the extent of washing may be varied by the inward projection of the latter.

Screen scrubber is an imperforate section, usually at the head of a revolving screen washer (Art. 6). The cover sections are steel plate or manganese-steel castings, usually unlined, with longitudinal lifters, and, normally, an annular baffle at the end to increase time-factor somewhat and to make the falling load slightly heavier than otherwise. The action of a screen scrubber is much lighter than that of the drum-type machines above described; correspondingly, less thorough disintegration is demanded. For further detail of construction and operation see Sec. 7, Art. 5.

4. STIRRING SCRUBBERS

Stirring scrubbers are essentially stirring devices in which thick pulps, ordinarily too fine or too soft to be scrubbed effectively by tumbling, are treated. Some of them, such as the pug mills and mulchers, depend upon moving blades to actually cut through soft

clay lumps; the majority, however, attempt by thorough stirring to produce repeated rubbing together of hard-particle surfaces in order to rub off adherent films of softer materials.

Pug mill (Fig. 5) consists of a horizontal trough *a* in which is mounted a shaft or shafts *b* carrying blades *c*, usually set at a sufficient angle to the shaft to impart to the pulp some longitudinal movement. Diameter of blade-tip circle ranges from 16 in. to 3 ft. according to the duty. Speed ranges from 10 to 50 r.p.m. The apparatus is used for soft clays containing relatively small amounts of small granular materials. CAPACITY depends upon the amount of disintegration necessary and the difficulty in effecting it; each case is more or less special, and can be decided only on the basis of test and experience. Form C, Fig. 5, represents a mixer in a revolving barrel and is used when the charge tends to be sticky and not travel through the normal type of mill.

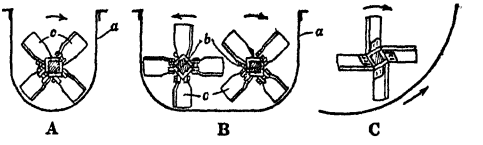

FIG. 5. Pug mills.

Log Washer

A log washer has two functions, *viz.*, (*a*) to disintegrate clay and clay-bound sand matrices, and (*b*) to separate disintegrated fines from lump material. Both disintegration

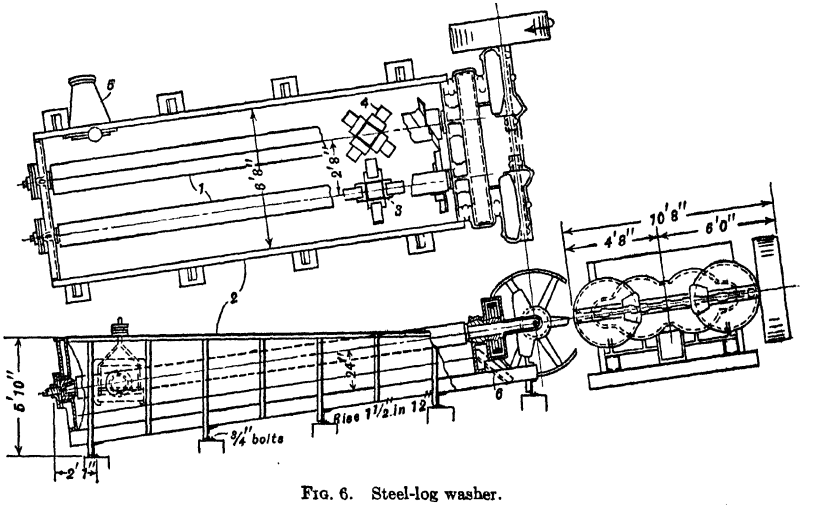

FIG. 6. Steel-log washer.

and transport of the coarser material are performed by blade-bearing inclined revolving LOGS, which agitate and turn over the feed in water in a box and at the same time push the settled lump material up an inclined bottom by reason of the spiral positioning of the blades. Discharge of fines is effected by overflow, in suspension in water, at the lower end of the box.

Description. Log washers (Fig. 6) comprise essentially one or two heavy inclined members or logs (*1*) mounted rotatably on a slope of 0 to 2 1/2 or 3 i.p.f. in a rectangular or round-bottomed trough (*2*), with bottom on the same slope. Logs were made originally (and still are in small, crude plants) of 12- to 18-in. sticks, shod full length with iron straps, and fitted with chilled-iron gudgeons (Fig. 7), the lower gudgeon or both gudgeons passing through a stuffing box and carried in a thrust bearing. In modern forms the bearings are outside, roller-type, and the lower (drive) end of the shaft passes through a water-sealed stuffing box. In the modern apparatus figured, the logs are made of 8×8×3/4-in. angles welded to form an 8×8-in. box girder. Base plates (*3*) for holding reversible alloy-steel blades (*4*) are welded to the logs in such spacing (about 4 per ft.) and

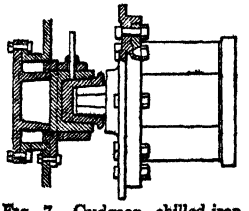

FIG. 7. Gudgeon, chilled-iron thimble and step bearing for wooden log.

position that the blades form an interrupted spiral with a pitch angle of 65 to 70° and a diameter of 20 to 40 in. Logs are made in 20- to 35-ft. lengths; in 2-log machines rotation is in opposite directions, rising in the center. Boxes are normally of steel, but often of wood, with adjustable overflow (*5*) and sand-discharge spout (*6*). Clearance between blade-tip circle and box bottom should be greater than the largest lump of feed. The upper 8 to 10 ft. of the box is usually sprayed. Normal speed range is 140 to 190 f.p.m. peripheral, the higher figure corresponding to the greater blade-tip circle; speeds up to 240 f.p.m. are shown in Table 1.

Table 1. Performances of 2-log washers on stone and gravel (*After Amos and Patterson*)

Feed material	Size, in.	Feed, tons per hr.	Box	Washer				Power, hp.			Water, tons per ton of feed	Reject, tons per hr.
				Length of logs, ft.	Diam. tip circle, in.	Pitch of blades, deg.	Speed, r.p.m.	Installed	Consumed			
									Total	Per ton of feed		
Limestone *a*	<2 1/4	24.7	Wood	25	36	22 1/2	21	60	59	2.4	0.7	4.2
" *b*	2 1/2~1 1/2	25 *c*	Wood	25	36	22 1/2	.....	100	91	3.6 *c*	4.0 *c*	.....
" *d*	<1 1/4	58 *e*	Wood	25	36	22 1/2	20	80	64	1.1	2.2	13
Gravel *f*	<1 3/4	42	Wood *h*	25	36	.....	25	100	.....	2.0 *i*	3.0	9.5
" *f*	1 3/4~1/4 *g*	60 to 70	Wood	25	36	.....	25	100	.....	1.5 *i*	0.8 *k*	10 to 20
" *l*	*m*	80	Steel	25	36	25 *n*	25	40	.....	0.5 *i*	2.5	8 to 10
" *o*	<3-in.	.....	Steel	25	36	25	16	60	.....	.....	*p*	.....
"	1 1/2~1/4 *q*	45 *c*	.....	20	.....	.....	19.5	50	.....	.....	.....	.....

a Cost (1935), 4.6¢ per ton of washed product, of which power was 65%. Labor, 1 man to 2 machines.
b Foreign material, red clay in balls and coating the stone.
c Washed product.
d Refuse from hand loading at quarry face; includes loam and clay balls 1 to 6 in. diam.; also some clay-smeared larger rock.
e Easier washing than material in first line of table because clay had somewhat weathered. Repairs and maintenance, 0.17¢ per ton of feed.
f Cemented. Owing to increasing cementation a rotary washing screen with scrubber section would no longer clean the product sufficiently.
g Through 2-in. ring, on 1/4-in. vibrating screen.
h Slope, 1 i.p.f.
i Estimated.
k Minimum operable with this feed. Supply limited.
l Cemented.
m Pit run.
n Repairs estimated at 1 to 2¢ per ton of finished product.
o Clay-coated.
p 400 g.p.m.
q <1/4-in. removed by vibrating screens.

Turbo washers are log washers with perforated false bottoms through which water is forced under pressure. They wash the lump material more thoroughly than the ordinary log washer does.

Operation. LENGTH of machine affects time that material is subjected to the action of the logs and therefore the extent of disintegration and cleaning of sand, but it does not affect rate of sand movement and, therefore, has no effect on capacity. SLOPE affects the run-back rate from the sands; the steeper the slope the better the cleaning, all other things being equal. Within small limits, also, slope affects rate of sand travel and thus controls capacity. SPEED affects the force of the blade blows and thereby the disintegration; higher speed, however, increases transport rate and correspondingly decreases time-factor; usual range is 20 to 25 r.p.m. for the larger machines. Slow speeds must be used for difficult washing. WATER CONSUMPTION varies according to the amount of solid to be carried over; figures range from 1 to 8 tons per ton of feed. The larger quantities are required with sandy and loamy material; with stiff clay thicker pulp aids disintegration, and when coarse material is to be overflowed a thick pulp is necessary for buoyancy. Unless draining is necessary, spray water should be added as near the upper end as possible, at pressures of 20 or 30 lb. or more. Extra water added to increase volume of overflow should be introduced in the corners at the discharge end in order to give a counterflow effect. POWER required is from 15 hp. for a small single-log machine to 100 hp. for a large double-log machine; the requirement is generally lower the higher the clay content; consumption figures as low as 0.5 hp.-hr. per ton are reported. FEED is introduced on the upcoming side of a single log or between double logs and, in order to save power and wear, as near the head end as will produce a clean product. When the feed varies widely in amount of dirt, it should be brought in high enough above the washer to permit the actual feed point to be changed with the duty demanded. Maximum size of feed is usually about 3-in., but 4-in. stone can be handled in large logs. Large rock tends to work down-slope and jam in the lower end of the box; this can be prevented by feeding over a grizzly, with oversize delivered farthest up-slope.

Concentrating action in a log washer. Apart from the classifying action, which is simply a rough sizing, a log washer forms a stirred bed in which reverse classification, aided by the lifting action of the paddles, keeps the coarser material at the top, where it is most readily transferred up-slope. If the feed is a mixture of minerals of different specific gravities, the coarse particles of lower gravity simply float on the bed. The coarse particles of higher gravity are prevented from sinking in it by the stirring. The finer material not in suspension, which percolates, stratifies according to specific gravity; a part of the lighter can then be forced to overflow, while the heavier bottom material is carried up-slope by the conveying action of the logs. If the log is overfed, both scrubbing and washing decrease markedly; if the pulp is too thick, fine light material is carried into a heavy-mineral log product.

Capacity. Maximum capacity is determined by the transport ability of the logs acting as a blade conveyor. Manufacturers' ratings of this capacity at blade-tip speeds of 200 to 225 f.p.m. range from 50 to 80 t.p.h. for a 36-in. tip circle on material of 2.7 sp. gr. Performance figures are in this range. Maximum capacities for smaller sizes may be estimated from these on the proportion of the squares of the diameters of the tip circles. Total capacity is the raking capacity plus the discard. When washing is difficult, speed must be reduced; then reduce estimated raking capacity proportionately. For material of high specific gravity, increase tonnage estimates proportionately. An oversize allowance of 25 to 50% should be made to take care of surges.

Performance. At the Coleraine plant of Oliver Iron Min. Co., washing hematite ore at <2-in. ring, 36-in.×25-ft. turbo-type double-log washers at 14 r.p.m. received 160 t.p.h. each and made 40 tons of concentrate. Overflow was sent at the rate of 107 t.p.h. each to 20-in.×18-ft. 2-log turbo machines at 9 r.p.m., which made 32 tons each of concentrate. Both concentrates averaged 58% Fe and 10% SiO_2. In Alabama (*108 P 458*) log washers are used to wash clay and gravel from nodular limonite. Usual capacity of 36-in. 2-log machines, 20 to 30 ft. long, at 12 to 15 r.p.m. is 50 to 75 t.p.h. with 8 to 25% of the feed being raked up as concentrate carrying 40 to 45% Fe. Maximum size of feed is about 3-in. Treating manganese ores (*Bul 734 USGS 99*) a double 25-ft. log making 12 to 15 r.p.m. treated 40 to 50 tons per 24 hr. with a water consumption of 50 to 75 g.p.m. and 20 to 25 hp.

Performances at a number of installations washing limestones and gravels are given in Table 1 (*129 A 145*). For use in mills see Secs. 2 and 3.

Character of products. Log washers are largely sizers so far as the coarse product is concerned and this must usually, therefore, be further concentrated. The ordinary means are picking, jigging, or sink-float separation. There is some differential settling of fine material, but overflow cannot be considered finished tailing except for low-cost mineral, or for one not further concentratable.

Screw washer (Fig. 8) is a modification of the log washer designed for light scrubbing and washing of coarser sand. It comprises an inclined tank with sides built up at the lower end to accommodate a pool, the depth of which is controlled by means of an adjustable overflow weir at *a*. The screws *b*, usually 16 to 20 in. diameter, are cast or sheet-steel spirals carried in bearings outside the tank. Provision for thrust is made in the lower bearings, and the stuffing box at the lower end is water-sealed. Usual speed range is 20±5 r.p.m., and should be an operating adjustment. Feed is introduced into the pool at a limiting size usually 3/8- to 1/2-in.; the location of the feed point is nearer the high end the coarser the feed. Spray water is introduced on the upcoming side of a single spiral, or between oppositely rotating double screws near the high end, the location of the topmost jet being a compromise between requirements for cleanliness and dryness of sand. Length is usually 15 to 20 ft. Pitch is 3 1/2 to 4 1/2 i.p.f., usually increasing with length. Capacity ranges from about 10 t.p.h. for a 16-in. single screw doing difficult cleaning and making a relatively dry sand to 70 t.p.h. when making an easy separation in a 20-in. 2-screw machine. Double-screw capacity for a given speed is substantially twice that for a single screw; capacity is directly proportional to speed and to the square of the diameter of spiral. Provision may be made to introduce bottom water near the shallow end of the pool; this tends to make a cleaner sand.

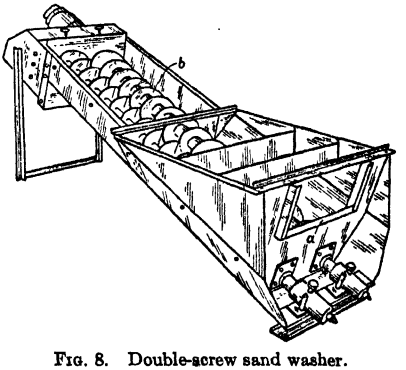

Fig. 8. Double-screw sand washer.

Modified log washer for sand washing, used at P. J. Weisel, Inc., Corona, Calif. (*41 #8 RP 55*) in production of glass sand, had alternate radial and 45° blades, 13 1/2-in. radius, mounted on a 1 15/16-in. shaft in a horizontal tank. The squeezing effected by the radial blades is reported to have been effective in disintegrating small clay balls (see Sec. 3, Fig. 64).

5. SAND SCRUBBING

Sand scrubbing is essentially removal of films or coatings, *i.e.*, disintegration of clay masses or the like is normally not involved. The method employed depends upon the refractoriness of the coating.

Scuffing is a name recently applied to a form of scrubbing, the object of which is, in general, to remove fine-grained crumbly or particulate incrustations from sandy materials. Thus clay and fine phosphate slimes are removed from pebble-phosphate particles prior to oiling for table flotation (Sec. 12, Art. 30; Sec. 3, Figs. 51, 54); decomposed feldspathic material is removed in preparing spodumene for froth flotation (Sec. 12, Art. 53); and fine powdery hematite is rubbed from quartz grains in treatment of the oölitic hematites of the southern U. S.

The methods employed for scuffing depend upon the difficulty of the job. Tumbling mills (Sec. 5) with light loads of rods or balls are used in phosphate and hematite treatment; chaser mills are used for some glass sands, tumbling mills with a load of slugs for others (*43 # 1 RP 104*); vigorous stirring in a thick pulp in a beater box such as the agitation compartment of an agitation-froth machine (Sec. 12, Art. 27), with a dispersant present to prevent redeposition (Sec. 12, Art. 7) is sufficient in other cases.

Separation in scrubbing is never clean. When cleanliness is desired the scrubbed material must be subjected to some further form of washing or other method of concentration.

WASHING

Washing is, properly, separation on a size basis between particles differing so widely in size that the smaller are readily suspended in a fluid current which fails completely to suspend the larger. The term is applied also, however, to classification, particularly in the sand and gravel industries and in those concentrating operations in which the crude separations possible in classifiers are sufficient, *e.g.*, for certain iron ores, manganese ores, phosphates, and the like.

Washing usually involves more or less scrubbing. This is particularly true with crudes which require light scrubbing only, such as crushed stone, dredged shell, and many sands and gravels.

The principal apparatus used for washing are screens for sizes coarser than 1/8-in.; sand tanks, mechanical classifiers and hindered-settling hydraulic classifiers for separations in the range from 10- to 100-m.; and hydro-bowls and air classifiers in the finest range.

6. SCREENING WASHERS

A washing screen is an ordinary screen provided with more or less powerful water jets playing on the oversize material, suitably housed to lead away liquid undersize and confine splash.

Rotary washing screens are used when a considerable amount of disintegration, usually of clayey material, is necessary, when tumbling and some resultant breakage of oversize are not harmful, and when separation is to be made at sizes not finer than 1/8-in.

The greatest development of rotary washing screens has been in connection with gold and tin dredging. In this service single-jacket screens up to 9 ft. in diameter and 50 ft. long, usually with a scrubbing section, have been built. See Sec. 2, Art. 20, for details of construction and operation in gold and tin dredging. See Sec. 7, Art. 5, for the forms ordinarily used in treating industrial minerals. Such screens when used for washing differ from those used for screening alone in the fact that they are normally equipped with lifters, they have internal sprays, and may have retarding rings to thicken the bed and thus cause a certain amount of in-load rubbing.

Rotary screens without lifters have been widely used for light washing and sizing crushed stone and gravel. They have been largely displaced, however, by vibrating screens in most modern installations of this type, particularly when but little disintegration is required, or where heavy scrubbing is done separately (Art. 1). The only sacrifice in such substitution is loss of the transport and distribution to bins effected by the usual rotary. This loss is more than compensated for by the smaller weight, greater compactness, and higher capacity and efficiency of the vibrating type.

Rotary screens are pre-eminent in washing dredged shell. In this service there is considerable marl to be dislodged from the shell cavities and tumbling is essential to present both faces of the shell repeatedly to the washing jets. The accompanying sand

is fine so that screening, even at somewhat under 1/8-in. on the outer jacket, is easy, and the shell is a cheap enough commodity to make it unnecessary to reduce aperture to effect the highest possible shell recovery.

Chains of heavy rod, hung in loops from the lifters, have been proposed for material that requires considerable scrubbing, and is deficient in coarse heavy lumps. The chains are to be hung in the scrubbing and/or coarse-screening sections. It is difficult to see how they could aid; any slap that they might exert would be on the downcoming side, which carries no bed; on the upcoming side the tendency would be to swing out and dislodge material from the lifter shelves at a lower elevation than otherwise, thus decreasing impact.

Capacity depends upon the requirements as to cleanliness of oversize, the size at which separation is made, and the amount of near-mesh material present. For broken rock and not more than 50% of oversize to any given screening surface, a base rate of 1 ton per 24 hr. per sq. ft. of screen surface per mm. of aperture is safe; this rate may be increased 100 to 200% in the case of the finer apertures (3/8- to 1/8-in.) owing to the presence of plentiful wash water. For loose free-running and generally rounded gravel of long uniform range, add 20 to 25%. For bulky, irregular materials such as shell, apply a factor proportional to the decrease in bulk weight, and a further multiplier which may be 0.25 or smaller for blinding tendency. If considerable proportions of near-mesh material are present, apply a half-size factor H of the general order of magnitude given in Sec. 7, Art. 9. If high washing efficiency is necessary, a final efficiency factor, depending on the roughness and fines-holding nature of the surface and the adhesive character of the fine material, must be applied; this will be a divisor, the magnitude of which may be as great as 10, if, as in the case of oyster shell for making high-purity lime, the surface has recessed roughness and if the shell has been dug from a deposit containing considerable clay.

Shaking-screen washers have been installed on a few dredges (Sec. 2, Art. 21). They have been extensively used in washing pebble phosphate, and, following this practice, have been employed in treatment of similar ores such as barite and manganese. They have also been used as the exclusive means for screen washing of anthracite.

The philosophy underlying the use of the shaker in phosphate washing was that separation had to be made at a fine mesh, disintegration had already been effected in log washers (Art. 4), the shaker was as efficient as the trommel, had much higher capacity per square foot of floor space and of fine-screen surface, and was cheaper to install. The modern trend is toward vibrating screens, which actually have most of the advantages attributed to the shakers.

Sprays for phosphate washing are reported to have been most effective with 50-lb. pressure; light loads on the screens are essential for good washing.

Washing of anthracite on shaking screens is, except for the bull screen, entirely secondary to sizing; the screens were and are selected for this latter service because they cause the least breakage of any screen available.

For construction and operation of shaking screens see Sec. 7, Art. 6.

Vibrating screens are used for most modern sizing and washing of rock, gravel, and the like down to 1/8-in. sizes when the scrubbing requirements are light. The types of screen which can run on low slopes are preferable if scrubbing must be done, and, in general, the cleaner the oversize product required, the flatter the screen chosen. The screens should be operated so as to produce a relatively thin bed and high activity of oversize, since turning of oversize for subjection of all sides to water is desirable.

Capacities may be reckoned on the basic rates given in Sec. 7, Art. 9, with the additional factors discussed under ***Rotary washing screens*** (*ante*).

Wash sprays. Various forms of spray nozzles have been devised to produce effective jets and spray streams. Two forms are shown in Fig. 9. Item *a* clamps to the header so as to hood a drilled orifice therein, the deflector being shaped to produce the form of jet desired. Item *b* is welded or clamped in position. The inner surface of the deflectors is polished in all cases to eliminate undirected spray. Spray water should be applied under at least 25-lb. pressure. The headers are run above the screen box, transversely to the flow; they should be close enough to the bed of material to impinge as sheets rather than as spray, and should be so spaced as to form a continuous sheet of water across the screen box at the level of the upper surface of the bed. The number of cross headers depends upon the amount of washing required; spacing is sometimes as close as 6 or 8 in. between headers. Spray pipes should be assembled, if possible, so that the entire assembly can be lifted to permit screen change.

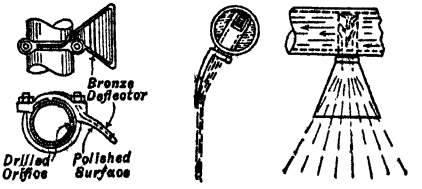

FIG. 9. Spray nozzles.

Vibrating scrubber (Fig. 10) is a modified eccentric-drive vibrating screen with the screen box rebuilt to form two separate transverse deep pockets *a* with hoppered screen bottoms. Fishtail sprays are provided above each pocket. Independent feed streams are brought to each trough at the back side of the screen box in the figure, and the scrubbed material discharges through the screen-box wall at the front. The device is effective, at any economic capacity, only when the amount of scrubbing necessary is very small, since the superincumbent load is light and turnover is slight, if any, and almost wholly undirected and accidental, while the spray is effective on the particles in the upper layer only.

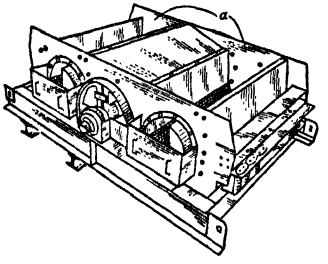

FIG. 10. Niagara scrubber.

A. E. Reed (*PC*) reports that 2 @ 2×6-ft. scrubbers handle up to 90 t.p.h. each of 7/16~1/8-in. stone to make satisfactory removal of clay; and that a pebble phosphate containing 35% clay is fed at 100 t.p.h. to 3 @ 2×6-ft. scrubbers in series, with intermediate screening on 20-m. Hum-mers, producing a washed pebble cleaner than was made on log washers, with less loss, and with a saving of 66% in power and 50% in maintenance.

Stationary-screen washers must ordinarily be set on such a steep slope that insufficient time is available for even the most cursory washing.

At LAWRENCE STONE & GRAVEL CO., Blenheim, S. C. (*45 #9 RP 44*), an 8×10-ft. stationary screen, on 5° slope, with 8-m. aperture, forms the bottom of the dump box for a 10-in. dredge line. A blank plate parallel to and about 1 1/2 in. below the screen causes the undersize and water to surge up and down through the screen, both washing the gravel and preventing screen blinding.

7. CLASSIFIER WASHERS

The classifiers used for sizing coarse and intermediate sands are, in order of decreasing use: (*a*) sand tanks, usually of automatic-discharge types; (*b*) whole-current and surface-current settlers; (*c*) launder- or trough-type: (*d*) mechanical classifiers; and (*e*) hindered-settling hydraulic classifiers.

Sand tanks are usually of the continuous type with automatic control of sand discharge. See Sec. 8, Art. 8, for description and discussion of the forms commonly used in concentration practice.

Tilting tank. Fig. 11 shows a form of tilting tank widely used in cleaning concrete sands. Tank *a*, which is pyramidal, with a minimum side slope of 50° (better 60° or 65°)

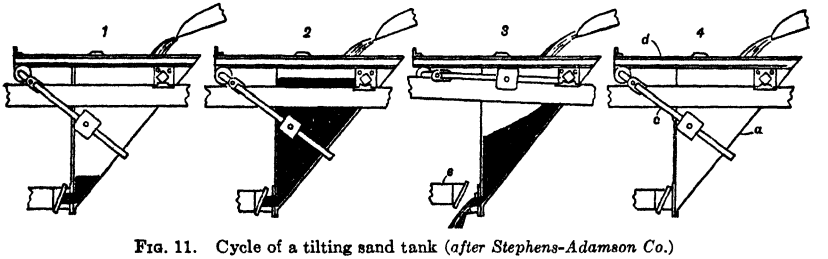

FIG. 11. Cycle of a tilting sand tank (*after Stephens-Adamson Co.*)

is supported near the back on knife-edge pivots, and is counterbalanced by the swinging arms *c*, carried at the outer ends of the cantilever frame *d* attached to the box, the mechanism being so arranged that as *d* tilts downward to the left, counterweight *c* is raised as shown in item 3, and the sand spigot opens by falling away from the fixed stop *e*. When the tank has emptied itself of sand, and has correspondingly decreased in weight, the counterweight *c* restores it to position with the spigot opening pressing against the closer stop. This may be a piece of rubber belt or softer rubber, suitably backed for stiffness, or a flatly conical rubber, wood, or metal plug.

Many forms of tilting tanks have been built. Sensitivity is increased by placing the counterweight on the opposite side of the fulcrum, increasing the horizontal projections of the distances from weight and counterweight to the fulcrum, and by lowering the latter toward the center of gravity of the system, but crankiness increases at the same time.

Fig. 12 shows a form of tank pivoted at *A* in which the counterweight arm *C*, pivoted at *B* on *D*, is so connected through arm *E* and bell crank *F* to valve plate *H* that as the

tank tilts and raises C, the bell crank swings up and out and the valve opening is thus increased over that caused by simple swing of the tank as in Fig. 11. Counterweight is set so that with the tank filled as indicated the weight of the small amount of additional sand necessary to cause water to back up on the feed side of baffle K and of the water backed up tilts the tank slightly; the relatively large valve opening permits rapid discharge and fall of sand with release of backed-up water, whereupon the valve again closes.

The cycle of the apparatus starts with the tank partly filled with settled sand and overflowing water and suspended material as in item 1, Fig. 11. Sand continues to build up (and the overflow tends to become coarser) until at, say, the condition shown in item 2, tilt occurs and a thick mixture of sand and water discharges as in item 3 until the counterweight restores at some condition as in item 1 before break-through of thin pulp occurs. The shorter the fluctuation of top-of-sand, *i.e.*, the more frequent the tilts for a given sand flow, the more uniform the product.

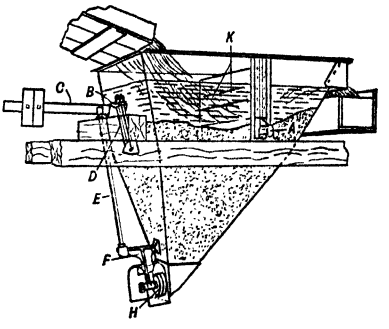

FIG. 12. Tilting sand tank with lever valve (*after Smith Engineering Works*).

Capacity of a tank depends upon the quantity of water overflowing, the separating mesh, and the dimensions at overflow level. For all practical purposes, all of the water entering can be considered as overflowing vertically, which gives a rising water velocity $V = Q/A$, where A is the tank cross-section at overflow level, Q is the volume of water flowing per unit of time, and V is velocity, the units being chosen to correspond. Settling velocities of the sands normally treated may be considered as lying in the Newton range (Sec. 8, Art. 1), and the equations for falling velocities there given apply. The determining sand size is that of the separating mesh. Free-settling prevails. Hence the maximum liquid volume that can be sent to a tank of a given size is that which will give an overflow velocity not to exceed that of the settling velocity of the grain of separating mesh; excess liquid will carry over coarser sand, a deficit in liquid will permit finer sand to settle.

Shaw (*44 #4 RP 47*) reports capacities as about 0.3 to 0.35 cyd. of coarse sand per hr. per cu. ft. of tank volume, and capacity for fine sands as 55 to 60% of those for coarse. Water capacity when catching coarse sand ranges from 10 g.p.m. per sq. ft. for 5-ft. tanks to 20 g.p.m. per sq. ft. for 12-ft. tanks; for fine sand, water capacity is about 75% of these figures.

Baffles. It is apparent that without some means of adjustment in overflow area, the character of the sand from such a tank will vary widely under the fluctuating conditions of stream flow normally prevailing. This may be compensated to a certain extent by installing a cross baffle (Fig. 12, item K) adjustable in its distance from the overflow lip. Only that part of the tank on the overflow side of the baffle is now to be figured for rising current, whence it follows that the rising velocity for a given water flow increases as the baffle is moved toward the overflow lip. If, at the same time, sensitivity is increased to the point that the fluctuation in top-of-sand is small, scour under the baffle enters as an element in determining size of overflow (see Sec. 8, Art. 8), and the cone becomes substantially automatic for a given setting of the baffle over a considerable range in feed volume. Adjustment in depth of baffle permits some control of sharpness of separation.

Spigot density of sand cones is given by Shaw (*44 #1 RP 37*) as ranging from about 30% water by weight for fine sands to 25% for coarse sands.

Spigot discharges at the above densities are at the rate of about 200 lb. solid per min. per sq. in. of spigot area for diameters of 2 1/2 in. or larger (*43 #10 RP 41*); discharge rate falls rapidly for smaller sizes (Sec. 8, Art. 12 and Fig. 41). Shaw (*43 #5 RP 49*) recommends that in calculating sizes for rougher-pocket spigots, an additional area of 20% over that required to discharge an equivalent volume of water under the same head be allowed to compensate for the sand content.

Whole-current classifiers in the form of sloughing-off boxes or V-tanks are useful for sand settling when rough sizing of the settled sands is desired. Action therein and design requirements and equations are given in Sec. 8, Art. 8. Usual sizes are 6 to 8 ft. wide at the top and 15 or 20 to 40 or 50 ft. long, with gates of slide or molasses type at about 5-ft. intervals. The shorter boxes are sometimes used as receiving boxes for dredge-pump lines, but the sizing that they effect is a disadvantage in this service, since the gate products must usually be mixed again for further treatment, and incomplete mixing results in uneven feed to the subsequent apparatus.

Surface-current classifiers are used for desliming fine sands, and at the same time effecting a size separation of the deslimed material. Analysis of action and design equations are given in Sec. 8, Art. 9. A form reported by Dull (*43 #6 RP 29*) is shown in Fig. 13. Spigots *a* are made of rubber hose with pinch clamps and are long enough to enable them to be swung over any one of the three dewatering conveyors *b*, thus permitting almost any desired blending.

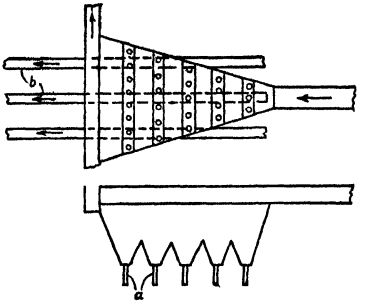

FIG. 13. A multispigot surface-current classifier (*after Dull*).

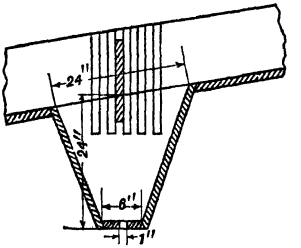

FIG. 14. Launder pocket for coarse or medium sands (*after Shaw*).

Launder classifiers are frequently used for bleeding off sands from flumes. The usual arrangement is one or more roughing pockets with adjustable baffles (see Sec. 8, Arts. 10, 11, 12) and a transverse slot in the bottom of the pocket (Fig. 14); if hydraulic water is used, a pressure pocket with spigot discharge is placed below the roughing pocket (see Sec. 8 as above). Dull (*43 #6 RP 29*) describes such an apparatus with 8 or 10 pockets along a length of launder such that all were visible to an operator centrally stationed; spigot discharges were regulated by molasses gates operated by means of levers from the station. Dull (*ibid.*) also describes an adjustable slicer (Fig. 15) for drawing off coarse sand; he recommends riffling a short distance ahead of the slicer in order to throw the sand into suspension and so withdraw only the quickest-settling material. See also Art. 20, Sec. 3.

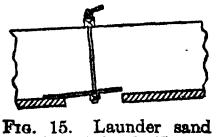

FIG. 15. Launder sand slicer (*after Dull*).

Scrubbing in flumes. Any flume or launder carrying coarse material causes a certain amount of rubbing together of the coarser, rolling lumps, and thereby does a certain amount of scrubbing. The action is accentuated by transverse riffling and by drops in the line (see Sec. 11, Art. 26).

At HEDRICK GRAVEL & SAND CO., Lilesville, N. C. (*45 #2 RP 42*), 200 t.p.h. of crude gravel with 20% clay and 2,000 g.p.m. is transported in an unriffled 2×250-ft. flume, on a 13% grade. Normally, sufficient disintegration is thus effected. If it is insufficient, provision is made for detour through a 6×24-ft. drum scrubber, the discharge of which re-enters the flume.

Sizing in flumes. Long-range products of one specific gravity stratify on a size basis in flumes, irrespective of the velocity of flow, but when the flow rate is such that the larger particles are never in suspension, the nature of the stratification is different according to the nature of the bottom of the flume. If the bottom is smooth, the large and flat grains form a slow-moving bottom layer, dragged along on the water-lubricated and substantially sand-free flume bottom by the frictional pull of the overlying material. This is the action in the trough washers used to remove flat slate and bone from the more rounded coal. The more rounded particles stratify more or less according to size above this lower layer, and progress by a combination of rolling and sliding. If, however, the bottom of the trough is riffled sufficiently to force rolling of the settled coarser particles, reverse classification (Sec. 11, Arts. 2, 26) occurs, and the material not in actual suspension stratifies with coarse on top and fine beneath. Thus by suitable combinations of bottom character, water velocity, and skimming arrangements, it is possible to use a flume to make rough cuts on long-range feeds of one specific gravity between flat and rounded coarse material, between intermediate sands and the remainder (an undercurrent, Sec. 11, Art. 26), between slime and the remainder, or between fine sand and slimes and the remainder.

Mechanical classifiers (Sec. 8, Arts. 2 to 7) are used both for grading and dewatering industrial sands (see Sec. 3), and for making a rough gravity-size separation of iron and manganese ores (Sec. 2). Their advantage over sand cones lies in the saving in sand fall

through the machine, a possible larger capacity per unit of mill volume, drier sands, and no possibility of choking of sand discharge. On the other hand, a sensitive automatic cone, well operated, probably makes a closer cut at the separating mesh, particularly with fluctuating feed.

Sizing test of one of the more siliceous concentrates made by a bowl-rake classifier on Mesabi ore is given in Table 2.

Table 2. Sizing-assay test on rake product of a bowl-rake classifier treating wash iron ore (*After De Vaney and Coghill, RI 3148*)

Mesh	Percentages			Distribution, %	
	Weight	Fe	Insol.	Fe	Insol.
4	3.6	31.8	52.6	2.6	5.5
6	1.0	36.0	46.1	0.8	1.4
8	1.3	38.0	43.6	1.1	1.6
10	1.5	42.2	38.1	1.4	1.6
14	2.2	43.3	36.2	2.1	2.3
20	4.3	43.5	36.1	4.2	4.5
28	8.0	40.5	40.5	7.2	9.4
35	12.0	39.4	42.2	10.6	14.7
48	16.4	42.0	38.9	15.4	18.4
65	18.0	45.7	33.1	18.3	17.2
100	16.1	49.9	27.0	17.9	12.6
200	12.5	58.3	15.6	16.3	5.6
<200	3.2	29.1	56.2	2.1	5.2
Totals	100.1	44.8	34.5	.....	.....

Dorr ore washer consists essentially of a combination of a standard rake classifier and a wash trommel. The trommel is mounted transversely above the classifier pool, at such a height that a lower segment is submerged, and material therein is, therefore, subjected to underwater scrubbing. Oversize is lifted to a discharge chute above pool level by a scoop device similar to that used in the discharge head of a grate ball or tube mill (Sec. 5, Fig. 56). The manufacturer reports that a 16×30-ft. machine has the capacity in iron-ore washing of 2 @ 6×25-ft. 2-log washers making 65-m. overflow, and a test on wash iron ore at Minnesota School of Mines is reported (*Bul 6 MSM*) in which the washer made 90% recovery against 88% in a log washer, and delivered a higher grade of concentrate. The data given in Table 3 are reported from Mahon and Counselman (*130 J 519*).

Table 3. Performance of Dorr washer at Mesabi Chief

	Percentages					
	Weight, dry	Iron		SiO_2	H_2O	Recovery
		Dry	Natural			
Crude	100.00	42.68	38.92	36.03	8.80	.....
Washing barrel concentrate	31.38	51.33	48.76	22.73	5.00	.....
Rake concentrate	33.98	55.08	51.22	18.19	7.00	.....
Total concentrate	65.36	53.28	50.06	20.37	6.05	81.61
Tailing	34.64	19.08	.....	70.83	.....	.....

Shovel and sand wheels are used to a considerable extent for rough washing and dewatering. Typical forms are described in Sec. 15, Art. 1.

Dorrco sand washer comprises a shallow circular tank with flat bottom inclined at a slope of 4 i.p.f., and a slowly revolving wheel equipped with peripheral buckets, just clearing the tank bottom. Sand is picked up by the buckets, carried above water level onto an inclined drainage deck and is discharged therefrom through a chute. Excess water overflows a peripheral lip on the lower wall of the tank. The 12-ft. (diam.) unit has a rated capacity of 150 to 200 t.p.h. of sand. Rough separations are claimed possible at any mesh between 20 and 100, and it is asserted that the machine may be operated to deliver a sand product containing not more than 1 to 5% <100-m. fines. Moisture content of sand is higher than that obtained in drags and mechanical classifiers.

Hindered-settling hydraulic classifiers are used both for making multiple splits of industrial sands at meshes from 10 to 100, and also for desliming. Multiple-spigot machines, usually of the automatic-discharge type (Sec. 8, Art. 11), are used in grading service (Sec. 3) and for concentration (Table 5); hydro-bowls (Sec. 8, Art. 7) are used widely in desliming (Secs. 2, 3).

Performance of an 8-spigot automatic-discharge classifier making asphalt sand (*48 #7 RP 81*) **is shown in Table 4. Further data on performances of such classifiers are given in Sec. 8, Tables 36 to 39.**

Character of classifier-washed products. A hydraulic classifier puts together in the various spigot products the bulk of the equal-settling grains in the feed which are fairly presented to the spigot and capable of settling against the rising current therein, plus any more rapid-settling grains carried past the preceding spigots and now fairly presented, plus some grains too small to settle normally against the nominal rising current in the spigot, but which settle nevertheless because of entanglement in a crowded mass of heavier

Table 4. Sizing tests of feed and products of an 8-spigot automatic-discharge hindered-settling classifier on a single-gravity natural sand

Screen, mesh	Weight retained, %								
	Feed	Spigot No. *a*							
		1	2	3	4	5	6	7	8
>8	0.7	8.5	0.5	.....	.....	.....	.....	.....	.....
10	1.5	12.8	1.1	0.1	.....	.....	.....	.....	.....
16	6.2	50.6	20.4	3.1	0.2	0.1	0.1	.....	.....
20	5.2	22.5	37.2	13.8	2.2	0.8	0.3	0.2	0.1
30	9.8	4.5	38.1	42.9	22.1	19.0	1.9	0.2	0.1
40	19.9	0.4	2.2	36.2	59.4	61.4	28.4	10.5	0.6
50	22.2	0.2	0.1	1.3	14.8	18.0	59.3	67.1	23.4
80	14.3	0.1	0.1	1.9	0.2	0.1	8.9	18.1	65.6
100	7.4	0.2	0.1	0.5	0.7	0.4	0.9	3.5	9.1
200	9.2	0.1	0.1	0.1	0.2	0.1	0.1	0.2	1.0
<200	3.6	0.1	0.1	0.1	0.2	0.1	0.1	0.2	0.1

a Overflow not sampled.

grains, or because of eddies in the sorting column. This distribution for a single-gravity feed to an 8-spigot hindered-settling classifier is shown in Fig. 16. For any given mesh size, grains of that size appear in a number of spigot products. Thus there are 28-m. grains in all spigot products; material amounts in *2* to *5*, some 4 or 5% in spigot *1*, and fractional percentages in the others. There are even fractional percentages of 200-m. reported in all, but this is probably due to abrasion in screening, at least in the coarser products.

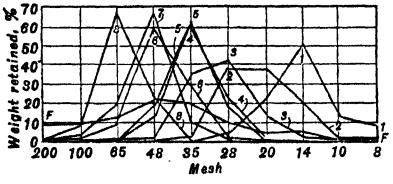

FIG. 16. Size distribution by an 8-spigot Fahrenwald sizer treating a single-gravity feed.

The 28-m. grains in spigot *1* are largely accidental, carried down by eddying and entanglement, since the current in this spigot was set for a 14-m. split. Even so, they average the most nearly spherical 20-m. particles in the feed, plus a few particles of heavier impurity. The 28-m. grains in spigot *2* and a majority of those in spigot *3* are substantially equiaxed; there is no prominent shape difference between them, but close examination shows that those in spigot *3* are somewhat flatter than those in spigot *2*. The 28-m. grains in spigots *4* and *5* are definitely flattened and/or elongated. These two spigots (as was also true of spigots *6* and *7*) were set to substantially the same rising currents in order to take care of the large amounts of 35- and 48-m. sands in the feed, hence there is not a great deal of difference in shape as between the two. The 28-m. grains in spigots *6* and *7* are mostly thin conchoidal shell-like fragments. A similar variation in shape of the grains of a given mesh size in successive spigot products holds all along the line, and is characteristic of closely classified products.

When the material classified contains grains of two (only) specific gravities, sizing curves of the products, plotted as in Fig. 16, show two humps, separated by a valley that is more or less deep and broad according respectively to the efficiency of the classification and the difference between specific gravities. With respect to either mineral, however, overlapping occurs as with a one-mineral feed.

When the feed is a natural primary ore containing free grains of both minerals and middling grains of all intermediate specific gravities, the curves lose the peaked character of Fig. 16, and become broad rounded humps with marked increase in overlap.

If the number of spigots is decreased the magnitudes of the overlaps between successive spigots increases. Thus the products plotted in Fig. 17 were made by combining spigots *1* and *2*, *3* and *4*, and *5* to *8* of the products of Fig. 16 and dewatering, with a certain amount of fines rejection, in rake classifiers. Thus the *1–2* and *3–4* products of Fig. 17 both contain 25 to 30% of 28-m., and *3–4* and *5–8* both contain 30 to 35% of 40-m. Percentages of such magnitude go far toward setting the average sizes of the products of which they are parts.

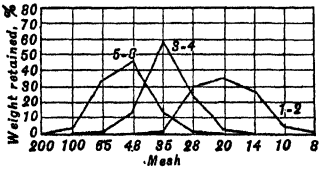

FIG. 17. Sizing tests of combined products of the classifier of Fig. 16.

Table 5. Concentration of a wash iron ore in a Dorrco sizer *(after Dorr Co)*.

Mesh	Feed		Spigot 1		Spigot 2		Spigot 3		Spigot 4		Spigot 5		Spigot 6		Overflow	
	Wgt., %	Fe, %	Wgt., %	Fe, %	Wgt., %	Fe, %	Wgt., %	Fe, %	Wgt., %	Fe, %	Wgt., %	Fe, %	Wgt., %	Fe, %	Wgt., %	Fe, %
6	11.4	59.8	43.7	61.8	16.7	58.0	.....	.....	.....	.....	.....	.....	.....	.....	.....	.....
8	11.8	58.5	31.9	62.3	26.7	59.8	8.8	50.2	.....	.....	.....	.....	.....	.....	.....	.....
10	8.9	59.4	14.9	62.3	22.5	60.5	11.6	54.2	.....	.....	.....	.....	.....	.....	.....	.....
14	8.4	58.7	6.3	64.1	18.3	62.0	19.2	56.2	.....	.....	.....	.....	.....	.....	.....	.....
20	8.3	58.7	.....	.....	10.6	63.6	26.3	60.9	14.7	43.5	.....	.....	.....	.....	.....	.....
28	11.3	57.3	.....	.....	.....	.....	25.2	64.3	33.0	56.9	.....	.....	.....	.....	.....	.....
35	13.0	56.7	.....	.....	.....	.....	.....	.....	41.1	62.7	13.8	35.2	14.8	27.1	.....	.....
48	9.7	56.2	.....	.....	.....	.....	.....	.....	.....	.....	35.6	50.8	26.0	39.9	.....	.....
65	5.4	57.6	.....	.....	.....	.....	.....	.....	.....	.....	36.5	62.0	22.8	53.5	.....	.....
100	2.8	57.8	.....	.....	.....	.....	.....	.....	.....	.....	.....	.....	14.9	54.7	.....	.....
150	1.3	47.3	.....	.....	.....	.....	.....	.....	.....	.....	.....	.....	7.4	46.1	.....	.....
200	1.3	35.4	.....	.....	.....	.....	.....	.....	.....	.....	.....	.....	7.4	33.8	.....	.....
<last	6.3	30.5	3.0	57.8	5.2	59.4	8.9	63.2	11.2	65.7	14.0	65.6	6.7	26.2	.....	.....
Totals	99.9	56.2	99.8	62.0	100.0	60.5	100.0	59.3	100.0	58.3	99.9	54.7	100.0	42.4	100.0	31.8
% Fe, cum.	56.2		62.0		61.3		60.7		60.2		59.7		57.7		31.8	
Recovery, cum. %	100.0		23.4		43.3		62.5		77.7		89.8		96.9		100.0	
Wgt. recovery, cum. %	100.0		21.2		39.7		58.0		72.7		85.0		94.5		100.0	

Nonhydraulic classifiers making two products only, such as the sand tanks and mechanical classifiers, show even greater overlaps. Thus if such a classifier is run for, say, a 100-m. split with not over 2% of <100-m. in the sands, there will be considerable amounts of 48-m. and probably, even, some 35- or 28-m. material in the overflow. If, on the other hand, <100-m. overflow is the aim and not over 2% >100-m. therein is allowable, the sands will contain 20 to 50% of material finer than the separating mesh (see Sec. 8, Arts. 4 to 8). This explains the necessity of placing a hydro-bowl or other sand settler as a guard behind mechanical classifiers in sand plants when there is a deficit of fine sands, and the advisability of desliming ahead of the mechanical machines when clean sands are wanted.

8. MISCELLANEOUS SCRUBBING AND WASHING

Many problems encountered in beneficiating ores and industrial minerals by scrubbing and washing methods are not solved by the standard apparatus and methods previously discussed. For these cases appeal is usually had to standard ore-dressing machines of other types, or to simple modifications of these.

Clay balls are formed when tough clays, resistant to penetration by water, are tumbled. Such clay masses tend to float on the balance of the material in tumbling and not to be nipped and subjected to the disintegrating forces. A number of methods have been tried to deal with them, none too successfully. These include crushing in smooth rolls (*41 #8 RP 34*), in corrugated rolls, or in toothed rolls, in each case preferably operated with only one roll driven so as to subject the material to a tearing force; special three-roll machines in which adjacent roll faces move in opposite directions, designed to accentuate the tearing effect; impact mills of the hammer type; pug mills (*41 #8 RP 34*); soaking, usually accompanied by the use of monitors or a plurality of high-pressure jets; or, as an acknowledgment of failure, separation on a screen and discard, together with any and all of the wanted material that they may have rolled up in their travels. Such discard is usually economical when the concentrate has low unit value, *e.g.*, phosphates; it is certainly questionable when the concentrate is tin or gold. The nearest to a satisfactory solution reported is a hammer mill with a slow-moving breaker plate, independently driven (*34 #10 PQ 52*).

At VIRGINIA LIMESTONE CORP., Ripplemead, Va. (*43 #12 RP 26*), clay balls were disintegrated by passing the crushed stone, before final washing and sizing, through a 1,000-cyd. bin, 40 ft. deep, through which about 100 g.p.m. of water from washing screens trickled. The bin was kept reasonably full, and the pressure and working of the mass in moving toward the outlet, together with the water, were effective.

Unsound stone is ordinarily eliminated to a satisfactory extent by log washing or by light crushing and rescreening; if it is of sedimentary character, *i.e.*, shale or soft sandstone, which tends to form flat particles in gravels, it can be removed by jigging in the coarser sizes and tabling in the finer (*43 #1 RP 67*). These apparatus also float over chip stone, clay balls, and wood. Some decrease in the content of flat stone is also possible by rescreening over slotted screens, but the separation is relatively crude. Use of an impact crusher is reported (*44 #2 RP 49*) to have reduced rattler loss from 45% to 30 or 35% in one case.

Iron, if it is a problem at all, is usually a serious one because of low tolerances in specifications. Iron in glass sands, if in the form of metallic iron, or magnetite or ilmenite grains, is readily removed from dried sized sands by magnets; if the grades have been prepared by classification, the iron-bearing grains are usually sufficiently finer than the prevailing size to screen out. Hematite grains are usually removed by wet tabling, but dry tabling and electrostatic methods are both applicable. Iron-bearing incrustations can sometimes be reduced somewhat by vigorous scuffing, but are usually best removed by acid leaching and subsequent washing.

Dry scrubbing consists in tumbling material in a dry state, usually on a revolving screen.

At GRANITE ROCK CO., Watsonville, Calif. (*43 #7 RP 33; ibid. #8, 22*), 1 @ 4×12- and 1 @ 4×10-ft. 2-deck vibrating screen were used for rescreening an average flow of 180 t.p.h. Newly crushed dry gravel sizes contained about 0.25% dust, but the fine sizes (1/2~1/4-in., 3/8~1/8-in., and 1/4~1/8-in.), when taken from stockpiles (which never dried out), contained up to 2.5% dust after rescreening. Substitution of wet washing brought the <200-m. in washed products down to a trace.

SECTION 11

GRAVITY CONCENTRATION

ART.		PAGE
1.	Principles	01
	PULSATED BEDS	
2.	Principles of jigging	04
	Fixed-sieve jigs	
3.	Harz jig	09
4.	Cooley jig	13
5.	May duplex jig	17
6.	Other plunger jigs for ores	17
7.	Diaphragm jigs	23
8.	Pulsator jigs	29
9.	Air-driven pulsating jigs	32
	Movable-sieve jigs	
10.	Hancock jig	33
11.	Other movable-sieve jigs for ores	41
12.	Hand jigging	43
13.	Design and operation of jigs	46
	SHAKEN BEDS	
14.	Pan, Rocker	56
	Shaking tables	
15.	Principles of shaking-table action	59
16.	Wilfley table	62
17.	Butchart table	70
18.	Card table	74
19.	Deister-Overstrom diagonal-deck tables	74
20.	Garfield table	79
21.	Plat-O table	81
22.	Operation of shaking tables	84
	Vanners	
23.	Principles of vanner concentration	90
24.	Side-shake vanners	91
25.	Operation of vanners	93
	STIRRED BEDS	
26.	Sluice	95
	Sink-float separation	
	QUICKSANDS	
27.	Diamond pan	105
28.	Chance cone	106
	SUSPENSOID MEDIA	
29.	Principles of suspensions for concentration	106
30.	Plant operation with suspensoid media	113
	HEAVY LIQUIDS	
31.	Dupont process	125
	WATER-IMPULSE SEPARATORS	
32.	Film sizing	126
33.	Revolving round table	127
34.	Strake	130
35.	Classifier separators	135
	PNEUMATIC CONCENTRATION	
36.	Bed-type pneumatic concentrators	136
37.	Pneumatic quicksand	139
38.	Blowing	140

1. PRINCIPLES

Introduction. Gravity concentration is the method of separating grains of minerals of different specific gravities by reason of their differences in movement in response to the joint simultaneous actions upon them of gravity and one or more other forces. In the great majority of gravity-concentration processes and apparatus the other force used is the resistance to downward penetration offered by a medium that has more or less fluid properties—a gas, usually air; water or some homogeneous liquid; or a mechanical mixture of a fluid and a particulate solid maintained more or less in suspension. The fluid properties utilized are density and viscosity; the forces which they bring to bear are buoyancy and upward impulse. In other gravity processes the impulse of moving fluids is caused to act at an angle approximating 90° to the vertical action line of gravity, and friction between the particles and a solid supporting surface at rest or in motion is an important element in the resultant movements of the particles.

In all gravity processes there is also an element of sizing. It is not difference in specific gravity that causes the differences in movement of particles, but the differences in their weights in the common medium. Hence a particle of a given high specific gravity and small size will have the same movement in a given fluid medium as another of lower specific gravity and greater size. Therefore, since all natural mixtures of broken grains have a long size range, it is necessary, if separation is to be effected, to superimpose size control, in order to make the motions of the particles of different specific gravities effectively differential.

Mineral mixtures susceptible to separation by gravity are those in which valuable mineral and gangue differ appreciably in specific gravity, *e.g.*, quartz or any usual rock

matrix (sp. gr., 2.6 to, say, 3) and a sulphide mineral (sp. gr., 4 to 7.5); or mixtures in which an apparent weight in the medium, appreciably different from the real weight therein, can be induced preferentially in one of the minerals, as by attaching air bubbles or a liquid film, or by agglomeration of a number of small particles into a larger aggregate.

Concentration criterion. The important criteria in determining whether and what kind of separation is possible in a particular case are the specific gravities of the minerals, the specific gravity and viscosity or plasticity of the separating medium, and the mechanical methods available for utilizing (and possibly accentuating) the differential particle movements induced by the difference in the specific gravities of the solids. The first two criteria may be combined in the ratio $(S_H - R)/(S_L - R)$, where R is the specific gravity of the medium and S_H and S_L are the specific gravities of the heavier and lighter minerals respectively. The quotient is the CONCENTRATION CRITERION. Neglecting, for the present, the viscosity of the medium and the mechanical means to be employed, it may be stated generally that when the concentration criterion is negative or a positive number greater than 2.5, separation will be easy at all sizes down to the finest sands; at 1.75, commercial separation is readily possible down to 65- or 100-m.; at 1.5, separation becomes difficult, and the commercial lower size is about 10-m.; at 1.25 commercial separation is still possible at gravel sizes but not, in general, at sand sizes; below 1.25 commercial separations by gravity concentration without differential weight modification are not presently possible.

Theory. Most of the attempts at theoretical explanation of gravity concentration have taken the form of assertions that Stokes' and Newton's theoretical formulations of the resistances of fluids to penetration by individual particles (Sec. 8, Art. 1) are applicable, with more or less modification. Both commercial practice and laboratory experiment with models of mill apparatus have shown, however, that this is not the case. Nor should it be true, since in commercial operation particles are invariably crowded to an extent that collisions with other particles affect their behavior materially, and the uniform true-fluid flows upon which the theoretical formulations are founded are conspicuous by their absence. The most that can be said for the use of these mathematical formulations in gravity concentration is that they are useful to indicate the character of fluid resistances and, consequently, the probable direction of the effects of changes in fluid conditions, but that attempts to quantify any particular case by their application bid fair to result in failure.

On the other hand, much can be learned by visual and instrumental study of the character of the media in which gravity concentration occurs and of the behavior of particles of different specific gravities and sizes in these environments, when the latter are varied within ordinary operating limits. Results of such studies are presently available, and certain generalizations based on them follow.

Separating media in which concentration is effected may be classified, on the basis of bulk movement with respect to their containers, as flowing and stationary. FLOWING MEDIA exert forces on the particles to be separated that are of the nature of impulse; in other words, their separating function depends primarily upon the rate at which they are moving. STATIONARY MEDIA, on the other hand, while frequently in motion within their mass, do not offer resistance to penetration by reason directly of the impulse connected with such motion, but rather by reason of buoyant and plastic properties of the media which these possess inherently or take on as a result of the agitation to which they are subjected.

Flowing media may have more or less vertical, or more or less horizontal resultant directional components. In general the fluid is air or water. Vertical currents are typified by free-settling classifiers (Sec. 8, Art. 10). These apparatus are utilized as concentrators only in unique circumstances (*Vertical-current washers,* Art. 35).

When the direction of the flowing medium is more or less horizontal, the separating particles follow different resultant directions according to environment; if they are free-falling in the medium, the form of the path is the trajectory of a particle under the influence of some initial forward velocity, *i.e.*, that of the transporting current, and the vertical resultant of the gravitational and resistant forces (see *Sloughing-off boxes,* Sec. 8, Art. 8). If the gravitational force is resisted by a substantially horizontal support, the particles proceed in the general direction of the current flowing downhill over this surface; in this case the particles are subjected to scour, which causes them either to roll or to proceed by a series of leaps (*PP 86 USGS*). (See *Film sizing,* Art. 32, and *Sluices,* Art. 26).

Stationary media comprise heavy liquids and solutions, and solid-fluid suspensions of varying degrees of concentration of solids. A BED is a suspension in which the solid is in the form of grains, ranging in size from sand to gravel; it is impregnated with a fluid, usually water; the whole is supported and confined in a receptacle, and is subjected to agitation, ordinarily but not necessarily intermittent. The majority of gravity concentrators utilise beds. Beds are further characterised by the fact that each grain is in substantially continuous contact, of varying intensity, with all grains immediately surrounding it; further, the bed has fluid characteristics only when dilated. STATIONARY BEDS are substantially undilated; SEMISTATIONARY are dilated. For details of formation and action see discussions of the various types below. A QUICKSAND is a suspension of lower solid concentration than a bed; the sizes of the grains are usually finer; the sustaining agitation is normally rotary or vibratory, if mechanical, or is due to flow of the impregnating liquid, and is of low intensity; the grains make much less

frequent and lighter contact with less neighbors; they are continuously dilated and continuously fluid. Quicksands are utilized primarily in sink-float processes (Art. 28). SUSPENSOIDS are characterised by fineness of solid and the fact that they are maintained, in large part at least, by thermal agitation of the liquid transferred through an ionic swarm surrounding the solid (Brownian movement, *87 A 217*).

Resistance of mixtures to penetration. When attempt is made to cause a solid particle to penetrate mixtures of solid particles and a true fluid, it is found that the resistance varies according to the size and interstitial spacing of the solid particles of the mixture, the specific gravity and shape of these particles, the character and velocity of the interstitial fluid, and the size, shape, and orientation of the penetrating particle. Part of these resistance properties are familiarly characteristic of the behavior of true fluids. The mixtures, however, have two further and less familiar characteristics, *viz.*, (*a*) that their resistance to penetration decreases, within limits, with increase in agitation, and (*b*) that with a given degree of agitation, resistance is a maximum for sizes of penetrating particle that are less than that of the mixture particles (where these are closely sized) and greater than the interstitial spacings of these particles. The first of these characteristics is not a property of true fluids; the latter finds a parallel, however, in the action of gases, the resistance of which becomes less than predicted by Stokes' law when the diameter of the penetrating particle approaches the mean-free-path of the gas molecules. (Millikan, *The Electron.*)

Density of a fluid-solid mixture (weight per unit volume) is called the COMPOSITE DENSITY; the frictional resistance to penetration is the PLASTIC RESISTANCE: total resistance to penetration is buoyancy plus plastic resistance, and is called the EFFECTIVE DENSITY. It may be measured by determining the density of a particle which will neither rise nor fall in the mixture.

Dilation of a bed or quicksand is due to transformation of the kinetic energy of the rising true-fluid into an equivalent upward static pressure, which is a substantial constant for any given bed irrespective of the degree of dilation, but which differs for different beds according to the size and specific gravity of the component grains. In other words, the back pressure exerted by a stationary bed at any given point in it is equal to the back pressure exerted by the overlying grains irrespective of their state of dispersion and consequent height above the point of measurement. It follows that since the upward static pressure at a given point in a bed is independent of the composite density of the bed, the gravitational (true-density) resistance of the bed with respect to individual particles should be independent of the composite density, although important so far as relative vertical position to other beds is concerned, and that the important element in the resistance to individual particles is the effective viscosity. This falls rapidly with increased dilation, so that penetration of highly dilated quicksands is much easier than that of just dilated beds of the same particles.

Reverse classification is the name applied by Dyer (*127 J 1030*) to the stratification by size, large particles at the top, which takes place with more or less completeness in a long-range bed. It is caused by the early interlocking of the large grains in compacting. The fine grains, not interlocked so soon, remain free to trickle down through the interstices of the larger. These fine grains thereafter resist subsequent penetration by the large grains and thus hasten the stratification. Strong rising currents of interparticle fluid tend to prevent trickling. The phenomenon is an important part of shaking-table and sluice operations.

Fundamental principles of gravity concentration may be summarized as follows:

1. Solid particles acting under the influence of gravity overcome the resistance of media in which they are immersed, or resist the impulses of such media, in proportion to their immersed weights. Since the immersed weights are proportional to the volumes and to the densities of the particles, specifically that:

(*a*) Particles of the same specific gravity but different sizes fall in a given medium at rates which increase as particle diameter increases.

(*b*) Particles of the same size but different specific gravities fall in a given medium at rates which increase with increase in specific gravity.

(*c*) Rules 1*a* and 1*b* may be modified by differences in particle shape, flat particles falling most slowly and equiaxial particles most rapidly, all other things being equal.

(*d*) Resistance of particles to rolling scour depends upon the extent of projection above the supporting surface and upon the immersed weight; small, flat, and high-gravity particles have maximum resistance; large, equiaxed, and low-gravity particles roll comparatively readily.

(*e*) Resistance of particles to leaping scour and to suspension in a scouring stream is greater the greater the immersed weight, shape being the same; for particles of different shapes and equal immersed weights, equiaxed and acicular particles are more resistant than flat.

2. Resistance of media to particle fall increases with increase in effective density and viscosity.

3. Scouring capacity of media increases with increase in effective density.

4. Effective density of a medium is dependent both on its degree of dispersion and upon the size of the penetrant.

(*a*) As against superinterstitial particles (see p. 05) the order of effective densities is: stationary beds semistationary beds >quicksands >suspensions.

(b) As against par-interstitial particles (see p. 05) the order is as in *a*.
(c) As against subinterstitial particles (see p. 05) the order depends not only upon relative sizes of penetrant and medium particles, but upon the chemical composition of the penetrant, and upon the composition, specific gravity, and chemical composition of the interparticle liquid. For details see discussion of particular machines.

Classification of processes and apparatus based on the type of medium employed for separation, follows:

BEDS:

Compacted (Stationary):
None. Jigs with a sub-bed of ragging (Art. 13) are the closest approach.

Dilated (Semistationary):
PULSATED:
Jigs.
SHAKEN:
Shaking table, pan, rocker, vanner.
STIRRED (vibrated).
Sluice, kieve.

QUICKSANDS:

Artificial:
Chance cone.

Self-made:
Robinson washer, diamond pan.

Suspensoids:
Heavy-media cones, differential-density separators.

LIQUIDS:

Heavy:
Sink-float with aqueous solutions and with heavy organic liquids.

Water:
Buddles, strakes. Also used as the interparticle liquid in all previous classes.

GAS:
Blowing. Also used to form semistationary beds on some forms of jigs and shaking tables, and an air quicksand.

BEDDED MEDIA

The processes and apparatus using dilated beds as the principal means of separation comprise a majority of the older machines. Jigs utilize pulsated beds in which the impregnating fluid is usually water, but may be air. Pans, rockers, shaking tables, and vanners use beds formed and maintained by shaking as the primary separating means, supplementing them by film sizing for cleaning concentrate. The kieve and the sluice use beds formed and maintained by stirring; the former utilizing a paddle, the latter the scouring and eddying impulses of water flowing with considerable velocity.

JIGGING

2. PRINCIPLES OF JIGGING

A jig is a mechanical concentrator that effects separation of heavy grains from light by utilizing differences in the abilities of the grains to penetrate a semistationary bed. Essentially it is a box with a perforate bottom and no top, in which a relatively short-range separating bed is formed by pulsating water currents. These currents may be all upward, all downward, or alternately upward and downward; if the last, they may have equal accelerations and velocities in both directions, but usually do not. The velocity of the water currents is variable throughout each cycle. Diagrammatic curves for the three cases stated are shown in Fig. 1.

Terminology. The bed is the entire mixture of solid and liquid in the jig box; it is LOADED when operating with continuous feed and discharge of products; it is UNLOADED when pulsating normally but neither being fed nor discharging; it is EXPANDED when loosened by pulsation, and COMPACTED when

the grains have all settled back into positions so that the jig box constitutes their entire support. A LAYER is a stratum of a bed in which all of the particles are of substantially the same specific gravity. The grains being treated are referred to as SUBINTERSTITIAL when of such size that they can pass through the interstices of the bed without other than glancing contacts. SUPERINTERSTITIAL particles are those too large to penetrate the interstices without displacement of the bed particles. PAR-INTERSTITIAL grains penetrate the bed along interstitial passages without apparent displacement of the bed particles, but with constant scraping and turning, stopping each time the bed compacts; they are the particles ranging in size from the interstitial spacing in a fully expanded bed to something slightly larger than the spacing in a compacted bed. When expansion is effected by moving the jig box up and down in a body of water, the jig is of MOVABLE-SIEVE type; when the box is fixed and the water is moved, the type is FIXED-SIEVE. A PLUNGER JIG is one in which the water movement is caused by a reciprocating plunger; in a PADDLE JIG, by a paddle; and in a DIAPHRAGM JIG, by a diaphragm. In a PULSATOR JIG water impulses are due to pressure changes caused by a rotating valve between a pressure source and the water.

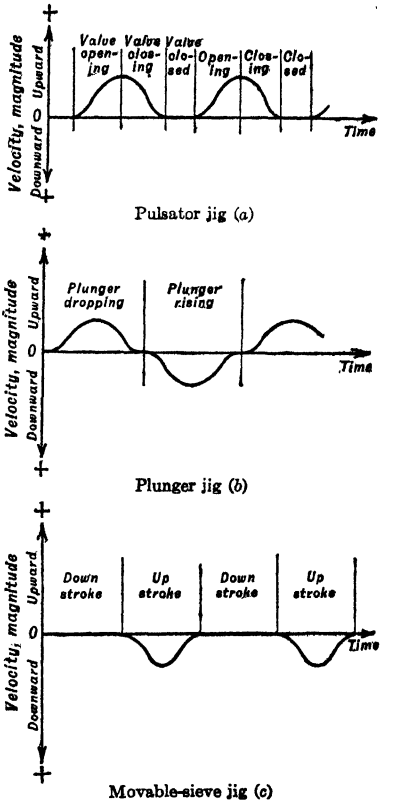

FIG. 1. Diagrams of jig currents.

Action in a jig. A dangerously simple picture of action in a jig may be had by charging a hand screen with a short-range pulp coarse enough to be retained and moving the screen up and down in water in a tub, at such a rate that the screen support drops from the bed on the down stroke, with such an amplitude that water does not flow in over the top of the screen on the down stroke nor does the surface of the bed emerge from the surface of the water on the up stroke. Following such treatment the bed will be found sorted into layers, the bottom one composed of the heaviest mineral, the top of the lightest mineral, the middle a mixture, indefinitely layered, of free minerals of intermediate specific gravities, and of locked-middling grains.

But while this pictures the performance of a hand jig (Art. 12), it does not represent the essential actions of a continuous jig. In such a jig the sorted bed already exists, and the new feed, comprising grains of all of the different sizes and varieties of those of the bed (and usually some finer), is flowed continuously into one end of the box, reject is overflowed continuously from the other end, and material is also continuously drawn from the bottom layer. A diagrammatic sketch of this action is shown in Fig. 5. (See detailed discussion of the figure.) At the moment it is sufficient to note that the bottom layer is the separating layer; that, in effect, it is a constant body of semifluid character and relatively high effective density; that when feed is presented to it, it takes in particles of the same specific gravity as that of its constituents, while all particles of lower specific gravity float on it and flow as a plastic stream to the overflow weir.

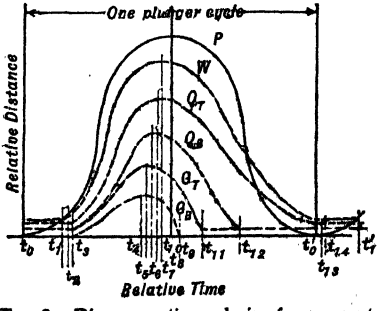

FIG. 2. Diagrammatic analysis of movements in a plunger-jig bed.

Vertical movement of the layers in an unloaded bed in a plunger-jig (Arts. 3 to 6) is indicated in Fig. 2. *P* represents the motion of the plunger, plotted as though it underlay the screen. Its amplitude is greater than that of any part of the bed. Water (curve *W*) starts to rise at time t_1. The lag is due to slow return of water through the bed, loss over the tailboard during the stroke, and open flap valves on the jig plungers. The water starts upward

abruptly at t_1, as the plunger meets the water surface in the plunger compartment, but the rate of rise is less than that of the plunger because of slip; W falls steadily relatively to P and reverses at t_3 somewhat before the plunger has reached the end of its impulse stroke. At the start of its fall, the water tends to follow the plunger closely, but as soon as the galena layer begins to settle and compact (t_9 to t_{11}; see below), the flow is hindered increasingly until a minimum level is reached at t_{14}, whence level rises slowly with entry of plunger water until t_1'.

Curve Q_T is for the top of the quartz layer. The small and flat grains, responding quickly to interstitial water movement, start to lift at t_2. At t_3 back pressure built up by interstitial friction causes the bottom of the galena bed to rise (G_B), lifting all above it, and imparting additional upward velocity to Q_T by force transmitted through the as yet partially compacted layer. Motion Q_T gradually decelerates owing to the settling velocity of the quartz in water until at t_7 Q_T reverses. At t_8 the quartz grains are accelerated by the water. Shortly thereafter, the bottom of the galena layer comes to rest, consolidation of the bed begins, and the resistance of the screen and side walls begins to build up through the consolidating layers, hindering the further fall of the top part, so that its falling rate decreases relative to that of the water and finally comes to rest at t_{13}. Similar analyses develop curves Q_B (bottom of quartz layer), and G_T and G_B for the galena layer. For detail see *153 A 442*.

Expansion of the bed starts at the top of the quartz layer at t_2 and increases until the bottom of the galena layer comes to rest at t_9. Compaction occupies a longer time, not being complete until the top of quartz comes to rest at t_{13}. Dilation is not uniform throughout; the top of a layer is more compact on the average than the bottom.

Penetration of a jig bed. The factors governing resistance of a bed to penetration were listed in Art. 1. A stationary bed cannot be penetrated by a solid which is larger than the bed interstices unless the weight or impulse of the applied solid is so great that a force of the general order of magnitude of a crushing force is imposed; hence the effective density of such a bed with respect to such a particle is relatively infinite. Since the composite density cannot exceed that of the bed particles, it is apparent that plastic resistance must comprise a very large part of the effective density. On the other hand, a particle smaller than the interstitial spaces of such a bed meets only the resistance of the interstitial fluid, in so far as its falling path is truly interstitial. With respect to such a particle, therefore, the effective density is that of the interstitial fluid. Hence the stationary bed is characterized by a transcendent plastic resistance against large particles and a small, but not negligible viscous resistance to small; composite density is the same for both, but effective density is substantially infinite for superinterstitial particles and falls discontinuously to that of the true fluid for subinterstitial particles. Hence superinterstitial and par-interstitial particles cannot penetrate a compacted jig bed, but subinterstitial particles can penetrate it freely in either direction.

The mechanism of penetration of a more or less expanded bed by superinterstitial and par-interstitial particles is illustrated diagrammatically by Fig. 3, which represents a sphere, somewhat larger than the

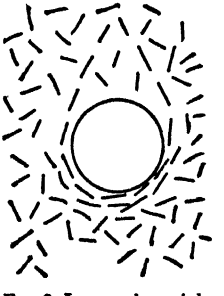

FIG. 3. Large sphere sinking through a jig bed.

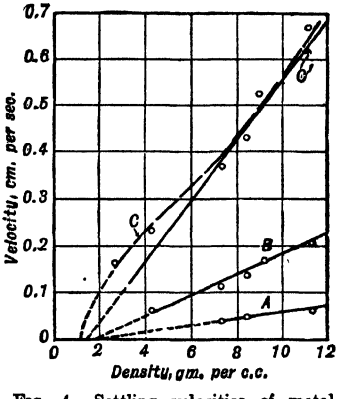

FIG. 4. Settling velocities of metal spheres in a 10~14-m. jig bed.

bed particles and of the same or slightly greater specific gravity, sinking through the bed. The particles below it and, to a certain extent, those at the sides, are pressed together, face-to-face, with their longer axes roughly parallel to the sphere tangents at the points of contact. This compression of the surrounding bed is marked, even in the upper parts of the bed, where, without such closer packing for comparison, the bed appears undilated. As the penetration proceeds these onion-shell-like layers open immediately in front of the sphere and close in behind it in the form of an indistinct wake, but there is actually no visible vertical displacement of the bed particles. Bed-size particles of heavier minerals act like the large spheres but the disturbance of the bed is less widespread. It is the resistance of the bed particles

to crowding plus the frictional engagement of the penetrating particle with the bed particles past which it slides that constitutes for these the plastic resistance of the bed.

Par-interstitial particles heavier than bed particles penetrate without visible disturbance of bed particles other than those that they actually touch. It does not follow, however, that they therefore penetrate more rapidly than larger particles. Actually they must worm their way through interstices offered in the expanded bed; they cannot crowd a direct path through. Hence plastic resistance is a maximum for them.

Fig. 4 (*153 A 442*) shows settling velocities of relatively large spheres of different densities in short-range quartz beds. Curves *A* and *B* are rates in the upper 1 in. of a 3-in. bed; curve *C* is for the entire bed. Mean composite density of bed *B*, based on solid present and mean volume, was about 1.6, and for bed *A*, 1.8. The density of sphere for zero velocity, by extrapolation, is slightly higher, *i.e.*, these are the effective densities for 3/8-in. spheres. But effective densities are greater than 2.6 for par-interstitial grains, and equal 2.6 for bed-size grains.

Sorting action in a jig bed is affected by the specific gravity, size, and shape of the grain. Fig. 5 shows paths according to specific gravity and size. Flat grains of a given mineral and size are always near the top of a layer of that mineral; equiaxed grains at the bottom.

Notation. In Fig. 5 *G*, *Q*, and *M* stand for galena, quartz, and locked middling respectively; the subscripts *Sp*, *Sb*, and *P* for superinterstitial, subinterstitial, and par-interstitial respectively, and *B* for bed-grain sizes, with sub-subscripts *L* for the larger and *S* for the smaller grains, as needed. *H* preceding *M* differentiates the middling as heavy. *Sl* stands for slimes.

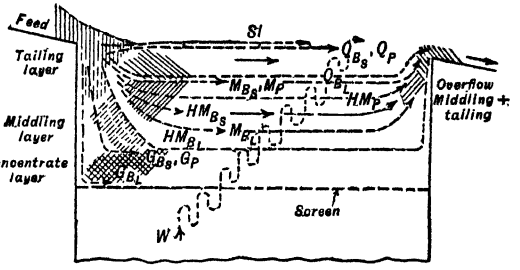

FIG. 5. Flow and distribution in a loaded jig bed. (For legend see discussion.)

Discussion. Fig. 5 represents, for simplicity, a loaded bed from a two-mineral ore (*e.g.*, galena in a quartz gangue), sized at the top only, *i.e.*, a long-range natural product. When this feed, represented by vertical hatching, comes on to the bed, it persists for a short time in its original mixture, then the various constituents begin to follow different paths as indicated. Slime of all mineral varieties flows in suspension along the top and over the tailboard. Small and flat bed-size quartz (Q_{B_S}) constitutes the top of the layer of quartz sands (indicated by down-to-the-right hatching), and par-interstitial quartz Q_P travels along with it, penetrating more or less slightly, depending upon the looseness of the expanded bed and the strength of the SUCTION (water down-flow) stroke. Large equiaxed quartz (Q_{B_L}) penetrates rather quickly to the bottom of the quartz layer but cannot penetrate the middling layer; it travels along with the quartz layer as a whole toward the tailboard and then is pushed up by the rising middling and overflows with it. Quartz of all sizes between Q_P and Q_{B_L} flows along in the mass of the quartz layer, somewhat stratified according to size and shape, and also overflows.

Galena of par-interstitial and bed sizes falls almost immediately to the bottom (cross-hatched) layer and distributes itself by size in the same way as the quartz. This layer does not, however, have general longitudinal flow. There is, of course, a gradual flow toward the drawoff (see descriptions of specific jigs), but this is usually so slow as not to be noticeable, and to all intents and purposes this lower bed may be considered stationary so far as horizontal movement is concerned.

Middling is of all specific gravities between quartz and galena. If given time, all of the grains of a given specific gravity from par-interstitial to bed-grain sizes would come to a given level and form a layer. Practically, there is a general sorting by specific gravity in which heavy middling of a given size underlies lighter middling of the same size, but large grains of lighter middling often underlie small grains of a heavier middling. This means that the layer tends toward a uniform composite density from top to bottom, thus the more effectively floating the quartz layer.

Buoyancy of a layer. As already indicated, a grain of par-interstitial size or larger cannot penetrate downward into a bed layer composed of grains of higher specific gravity. It may, if large enough, submerge partially, as a block of pine in water, but there it floats. It will probably not be lifted out by the rising stream at the end, although it may be. Too many such grains, floating at the surface of a layer, tend to screen off access by grains that should enter the layer. Hence the desirability of excluding tramp oversize from jig feed.

Subinterstitial grains penetrate independently of the composite density and plasticity of the bed. Their movement apparently depends upon a combination of differences in free-settling rates in water (Sec. 8, Art. 1) and differences in resistance to scour by roughly horizontal water currents (Sec. 18, Art. 16). The small particles pass through the interstices of a bed of relatively coarse particles (RAGGING), partly in suspension and partly by being scoured along the upper surfaces of the individuals composing the ragging. The scouring and suspending forces are maxima at or shortly after the time t_1 (Fig. 2), when the rising current is approaching full velocity and the ragging has not yet begun to expand and enlarge the interstitial passages. The small particles in suspension at this time, which are predominantly the slower-settling, lighter particles, respond immediately, of course, to this current and begin to rise through the ragging. The light particles settled on the ragging, presenting greater surfaces in proportion to their weight than the heavier, likewise roll and leap and are the first of the

settled material to go into suspension. The largest of the heavy small particles are rolled along on the supporting surface to a crevice and fall, never going into suspension at all. Hence throughout the period from t_1 to t_5 preferential rise of light particles is favored.

Interstitial currents. The falling currents of water are slower than the rising, as is evidenced by the fact that air collects under both the sieve and plunger of a plunger jig. The same conclusion can be reached, of course, by analysis from Fig. 2, bearing in mind that the returning force on the water is simply gravity, which is much less than the positive push of the plunger. This is indicated by the curve marked *W* in Fig. 2. Since the actual falling rates of the small particles are negligible by comparison with the interstitial water velocities, and the interference with fall and rise by the particles of ragging are substantially the same, the particles that remain in suspension and those that are readily scoured into suspension pass over the tailboard with the overflow water. Substantially only those that resist suspension pass down through the ragging.

Summary of bed action in jigs, in terms of what it does, follows:

(*a*) The lower layer of the bed will exclude from itself all grains of lower specific gravity than that of the grains composing the bed, within the size range of the grains composing the bed.

(*b*) Grains of equal or greater specific gravity than the bed will enter it irrespective of size range, except that larger grains, if flat, may not enter unless started on edge, and grains much smaller may be excluded by making the mean rising-current velocity distinctly greater than that of the downward current.

(*c*) The top layer of the bed will, in general, be penetrated by all particles fed, if the jig is being properly operated, except that those particles small enough to remain in suspension in the water move with and are governed by the flow of the water rather than by any action of the bed.

(*d*) The central layer of the bed excludes all grains of lower gravity than its own, within the size range of its own grains. It, therefore, stops all the coarser grains of gangue from further penetration. It passes all specifically heavier material. Its own substance, being prevented from passing downward, builds up at the expense of the low-gravity upper layer, which is thereby forced to overflow.

(*e*) The finest size of grain that can be maintained in a bed is determined by the apertures of the perforate support and by the velocities of the water currents in the bed interstices; particles too small to settle out of these currents cannot deposit; subinterstitial particles that deposit are usually fine enough to pass through the screen.

(*f*) Particles of light mineral smaller than the bed particles can and will penetrate even the lowest stratum of the bed, if the jig is so run that this layer opens sufficiently on the pulsion stroke to receive them, and if the mean downward water velocity exceeds the upward. Such penetration is even more ready in the case of small middling particles.

(*g*) If a bed is made too loose, its resistance to penetration by grains of its own size range is decreased and the grade of concentrate falls.

Maximum practical feed size for heavy ores is about 1.5-in.; 3-in. material has been handled, but not very satisfactorily. The average upper size limit for short-range feeds at the present time is about 0.5-in. and the minimum about 1-mm. Scalping of long-range natural feeds, as by placing jigs in ball mill circuits, particularly in mills treating gold ores, is increasing; as is also the use of jigs in rougher-cleaner arrangement in conjunction with or replacing table sluices on both gold and tin dredges. Minimum sizes that a jig will save are difficult to state. Some recovery of sulphide minerals is made along with the gold in grinding mill circuits, but this is largely incidental; for gravity treatment of ores of normal sulphide-gangue gravity differences, at sizes less than 2-mm., shaking tables are preferred. The maximum feed size in coal jigging is 6-in., minimum $^1/_8$-in.

Feed-size ratio (defined as the ratio of the aperture passing the largest grain of light mineral to that retaining the smallest grain of heavy mineral) in jig practice averages far below either the free- or hindered-settling ratios (Sec. 8, Art. 1) for the constituent minerals. Average for 12 plants treating ores with apparent concentration criteria ranging from 2 to 4 was 1.7, and the range 1.2 to 2.8. This is, of course, because the actual separations required were between pure mineral and rich middling, and/or pure gangue and poor middling, and the attempted concentration criteria were close to 1.0. In roughing service to obtain concentrate, where tailing is to be retreated, size ratios are what falls with natural or lightly deslimed feeds, crushed only to the size that liberates a reasonable amount of valuable mineral; the impoverished middling constituting the other product of such operations is always treated further.

Types of jigs. Jigs are classified on the basis of the method of effecting dilation of the bed. Thus, broadly, there are FIXED-SIEVE jigs, in which the dilating fluid, usually water, is caused to pulsate while the bed is stationary in space; and MOVABLE-SIEVE types in which the bed as a whole moves in a stationary body of water. Fixed-sieve jigs are subclassified on the basis of mechanism. Thus they are of PLUNGER TYPE when the water is caused to pulsate through the sieve by reciprocation of a plunger; PADDLE type when the impulse comes from a paddle; AIR-PULSATED when movement is due to alternate expansion and contraction of a confined body of air; DIAPHRAGM type when the plunger edges are sealed to the wall of the chamber by a flexible seal which allows movement of the plunger but prevents flow of water past it; and PULSATING when water comes to the under side of the screen from a closed chamber supplied with water through a pulsating valve.

FIXED-SIEVE JIGS

3. HARZ JIG

Description. The Harz jig is shown in Fig. 6. It consists usually of a plurality of separate and independent rectangular hopper-shaped compartments, with the upper part subdivided by a shallow longitudinal partition into screen and plunger compartments. The screen is fastened to grate *K*, which is held in place on the lower, fixed liners by upper liners that are held in by wedges. Reciprocation of the plunger causes flow of water through the screen. Feed enters the first screen compartment through slot *b*. The longest plunger stroke and consequently the highest water velocities are maintained in this compartment. The heaviest particles settle to the screen, and those smaller than the screen aperture pass through into the lower part of the compartment, called the HUTCH; coarser heavy particles collect on the screen until a bed is formed, when they pass under hood *F* and over the lip into spout *J*; light material passes over tailboard *C* into the second compartment, where it is subjected to currents of lower velocity, whereby the heavier part of the remaining material is removed while the lighter goes on into the third compartment, and so on.

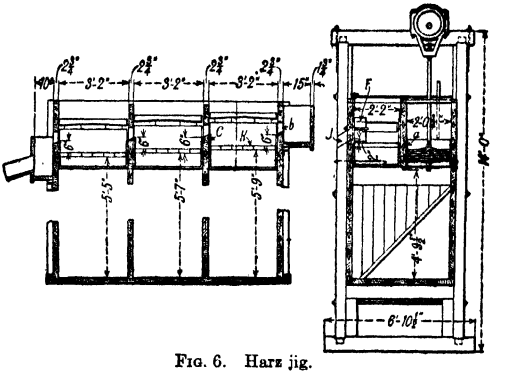

FIG. 6. HARZ JIG.

Table 1. Operating data on Clausthal jigs (Harz type)

Size of feed, mm.	Strokes per min.	Screen aperture, mm.	Length of stroke, mm.
22 ~16	120	4 *x*	46
16 ~11	140	4 *x*	30
11 ~ 8	160	2 *x*	30
8 ~ 5.6	180	.....	25
5.6~ 4	200	.....	20
4 ~ 2.8	220	.....	15
2.8~ 2	240	3-4	13
2 ~ 1.4	260	2-3	8
Sand No. 1	280	1	5
Sand No. 2	300	1	5
Sand No. 3	300	1	5
Sand No. 4	300	1	5

x Concentrate taken from the screen.

Performance of Harz jigs. Settings for the treatment of short-range lead-zinc ores at CLAUSTHAL (*100 J 425*) are given in Table 1. Practice on a lead-silver ore at SILVER KING COALITION is shown in Table 2. BUNKER HILL & SULLIVAN mill uses 2-compartment Harz jigs to produce galena concentrate from the first and middling from the second compartment (tailing going to flotation) at two sizes: 7~2.5-mm., and 2.5-mm.~100-m. (*Q*). Jigs are of typical wooden construction, in pairs, back to back; bottom slope, 24°. Compartments are all of equal size, 26(wide)×34-in., with 1/4-in. steel-plate liners covering all wearing surfaces. Plungers are 31 9/16 × 25 1/8-in. Bed concentrates are drawn through side dam-and-gate valves 10 in. from discharge end, and join the hutch concentrates below. Brass-wire screens rest on grates of 3 1/2×3/4-in. wooden cross bars spaced 4 in. c-c.; life of screen, 120 days. Drop between screens, 5 1/2 in. Depth of bed, 3 1/2 in. Feed contains 29% water;

Table 2. Operating adjustments on Harz jigs treating short-range feeds at Silver King Coalition (*116 J 370*)

Jig. No.	Size feed, inch	Screen aperture *a*	Revolutions per min.	Length of stroke, inch	Product *b*
1	1/2 to 7/16	5-mesh	165	1	Gate discharge
2	7/16 to 5/16	4	215	5/8	One gate, 1 hutch
3	5/16 to 3/16	4	240	1/2	2 hutch
4	3/16 to 3-m.	5	270	3/8	2 hutch
5	<3-m.	5	280	5/16	2 hutch

a Hutch-making compartments bedded with coarse lead concentrate.

b Average assay of concentrate from jigs Nos. 1 to 4: 1st compartment: 42.4 oz. Ag, 59.6% Pb; 2nd compartment: 34 oz. Ag, 32% Pb. Sand jig (No. 5): 1st compartment: 31 oz. Ag, 53% Pb; 2nd compartment: 11 oz. Ag, 15% Pb, 26% Fe.

jig water, 84 g.p.m. Power, 3 hp. per jig. One man attends 8 jigs, but is responsible for no adjustments. Lost time (mainly for repairs), 4%. Additional data are in Table 3. Earlier practice in the BUNKER HILL & SULLIVAN mill retains much of technical interest. Table 4 records the performance of jigs (as of 1925) working at 4 graduated screen sizes, the finest one deslimed; all jigs were 4-cell. Still earlier practice (about 1910) was chiefly interesting for its extended use of classifier jigs to treat the whole <10-mm. screen product without previous desliming; also for use of a hydraulic classifier to enrich the first and second hutch products of those jigs (*2 MM 361, 441*). The first cell of the 5-cell classifier jig had two sheet-iron partitions from side to side dipping about 1 in. into the bed; the first was near

Table 3. Bunker Hill & Sullivan jigs, as of 1939

Size of ore	7- to 2.5-mm.	2.5-mm. to 100-m.
Screen (both compartments)	6-m. (0.113-in.)	10-m. (0.065-in.)
Strokes per min	200	260
Length of stroke (both compartments)	3/4 in.	1/4 in.
Capacity, dry tons per 24 hr.	170	80
Assays:	Pb, % Ag, oz.	Pb, % Ag, oz.
Feed	7.41 3.16	5.95 2.60
Middling	3.16 1.40	2.53 1.10
Concentrate (all jigs)	60% Pb, 25 oz. Ag	

Table 4. Bunker Hill & Sullivan jigging practice, 1925

Feed size, mm	30~15	15~7	7~3	3~0.833
Screen compartment, in.	25 1/2×33 1/2	25 1/2×33 1/2	1 @ 25 1/2×37 3 @ 25 1/2×33 1/2	1 @ 25 1/2×37 3 @ 25 1/2×33 1/2
Screen material	15-gage plate	17-gage plate	Brass wire	Brass wire
Screen aperture, mm	5, rd.	3, rd.	6-m.	8-m.
Screen life, days	30	30	180	180
Strokes per min	150	200	225	250
Strokes, length, in.	1 1/2	1	3/4	1/4
Bed, depth, in.	6 1/2	5 1/2	4 1/2	4 1/2
Feed, tons per 24 hr.	96	48	72	48
Feed, % water	50	50	50	50
Jig water, g.p.m.	850	850	624	624
Attendance, jigs per man	12	12	12	12
Assays, % Pb:				
Feed	8.3	14.0	8.0	7.5
Concentrate		60.0	70.0	75.0
Middlings	18.0	11.0	10.0	8.0
Tailings	0.86	1.5	1.2	1.5

Table 5. Harz jigging at U. S. Smelting, Refining and Mining Co., Midvale, Utah (1925)

Size of feed, in.	0.3~0.13	0.13~0.087	0.087~0.053	<0.053	0.053~0.036	0.053~0.036
Sieves, woven wire						
Aperture, in.:						
Compartment 1	0.252	0.145	0.095	0.087	0.087	0.087
Compartments 2 and 3	0.198	0.145	0.095	0.087	0.087	0.087
Life, days	105	89	72	69	74	76
Power consumed, hp.	2.5	2	2	2	2	2
Speed, r.p.m.	190	217	248	278	252	264
Length of stroke, in.:						
Compartment 1	3/4	9/16	7/16	5/16	1/4	1/4
Compartment 2	3/4	9/16	7/16	1/4	1/4	1/4
Compartment 3	11/16	9/16	7/16	1/4	1/4	1/4
Tons solid per 24 hr.	130	100	95	80	70	70
Percentage of lost time	1.5	1.5	1.5	1.25	1.5	1.25
Jig water, gal. per min.	70	60	52	49	47	49
Thickness of bed, in.	6–7	5–6	4.5–5	4.5	5	4.5
Percentage of moisture in feed	33	30	34	38	40	43
Assay of feed, Pb *a*	8	8.5	8.5	12.0	12.0	12.0
Assay of feed, Zn *a*	7.5	7.5	7.5	8.5	8.5	8.5
Assay of concentrate, Pb *a*	22	22	22	26	26	26
Assay of concentrate, Zn *a*	5.6	5.6	5.6	4.5	4.5	4.5
Assay of middling, Pb *a*	3.5	5	4.5	8	8	8
Assay of middling, Zn *a*	9.9	9.5	10.0	10	10	10

a Extremely variable; averages only given. Thickness of bed and regulation of hutch water left to operator, who attended 6 jigs.

the middle, lengthwise, and the second a few inches nearer the tailboard; both classifying compartments discharged over weirs at one side into the same spout. The slime, practically completely eliminated, was 17% >40-m. and 50% <200-m.; it amounted to 8.4% of the jig feed, and assayed 16.25% Pb. All cells of the jig had gate-and-dam discharges at middle of the tailboards. Hutch concentrates from the first two cells, consisting of high-grade coarse and low-grade fine grains, were delivered, after dewatering, to hydraulic classifiers made of steel pipe and fittings but based on the design of the glass laboratory classifier shown in Sec. 19, Fig. 106. Falling products of these classifiers were high-grade concentrates; the rising products were treated on shaking tables. Table 5 gives operating data on jigs formerly treating complex lead-zinc ores at U. S. SMELTING, REFINING & MINING Co., Midvale plant; all jigs were 3-cell, about 23 1/2 × 35 1/2 in. BLEISCHARLEY mill, in Upper Silesia, affords modern example of closely graded crushing and jigging (*112 A 952*). Ore is dolomite carrying replacements and fracture fillings of wurtzite, galena, marcasite, and GALMEI (mixed silicate and carbonate of zinc). Average assay, in 1931, was: Zn, 19% (of which 1.7% was in oxidized minerals); Pb, 2.8%; Fe, 6%. Each of three sections, treating 300 tons in 8 hr., has 15 trommels, making 10 undersizes, and 3 hydraulic classifiers subdividing the undersize from the finest trommel. Each section has 19 jigs treating the sizes shown in Table 6. In a typical month, the jigs rejected 21% of the mill feed as tailing assaying. 2% Zn, 0.10% Pb, 4.4% Fe; their lead concentrates assayed 4.5% Zn, 71.4% Pb, 4.8% Fe. Practically all of the zinc products of the jigs required ball-milling and flotation for elimination of iron. Harz-type jigs until recently have been practically the sole mechanical separators for the TSCHIATURI, Caucasus, manganese ores, operating usually on short-range feeds, *e.g.*, 30~20, 20~15, 15~8, 8~5, 5~3, and < 3-mm., obtained from shaking screens (*34 ME 619*). The ores contain both extremely hard and excessively soft and friable minerals; concentrates up to the standard 52% grade were seldom possible, and losses of Mn were 40% or more, chiefly in slimes. There was no provision for retreatment of middlings. In one modern mill of 50-t.p.h. capacity, erected in 1935, only 2 sizes, 40~22 mm. and 22~8 mm., produced on submerged-screen washers, are treated on 3-cell Harz jigs (one for the coarser, two for the finer size), yielding finished concentrates, final tailings, and a middling product which, after recrushing to 8-mm., rejoins the undersize from the 8-mm. screen washer for treatment on Hancock-type jigs (see Art. 10). The first 2 cells of each jig deliver concentrate; middling from the third. Data in Table 7 are on the hourly basis; analyses are averages from a 3-day test run. Of the total feed to the mill, averaging 38.77% Mn, the Harz jig concentrates (both sizes) amounted to 21.5% by weight, and accounted for 28.7% of the Mn (other recoveries by movable-sieve jigs and tables); their tailings amounted to 5.6% of the mill feed, and carried 1.7% of its Mn.

Table 6. Jig equipment at Bleischarley mill, Poland, 1931

Size jigged, mm.	Number of compartments	Strokes per min.	Discharged *via:*
45~28	?	90	Pipe *a*
28~20	3	110	" *b*
20~14	3	130	" *b*
14~10	5	140	" *b*
10~7 (2 jigs)	5	160	" *b*
7~5 (2 jigs)	5	180	Hutch *b*
5~3.5 (2 jigs)	5	210	" *c*
3.5~2.5 (3 jigs)	5	240	" *d*
2.5~1.5 (2 jigs)	5	260	" *d*
1st class. (2 jigs)	5	280	" *d*
2d classifier	5	280	" *d*
3d classifier	5	300	" *d*

a Middling and tailing hand sorted.

b Middling recrushed to 3.5-mm. and returned; tailing to waste.

c Pb-Fe middling retreated for Pb; Zn-Fe middling to flotation; Zn middling to flotation.

d All Zn middling to flotation; tailing to waste.

Table 7. Operation of modern Harz jigs at Tschiaturi, Caucasus

Size of feed, mm.	40~22		22~8	
Tons (met.) per hr.	Solids	Water	Solids	Water
Feed	7.0	27.0	4.5	26.0
Additional jig water	.....	15.0	.....	15.5
Concentrates	3.5	15.0	2.25	14.5
Middlings	1.0		1.0	
Tailings	1.5	25.5	1.0	25.5
Hutchwork	1.0	1.5	0.25	1.5
Assay: Concentrate	51.78% Mn, average for both sizes			
Tailing	11.59% Mn, " " " "			

ABERFOYLE, Tasmania, tin-tungsten mill offers a good example of stage jigging of short-range feeds; capacity, 50 tons per 8 hr. (*30 CEMR 303*). Ore averages 1.5% Sn, 0.2% WO_3, in fairly coarse cassiterite and wolframite crystals not intimately intergrown with the other metallic minerals, hematite, pyrite, and other sulphides. Jigging begins at 3/8-in. (following jaw crusher and rolls); undersize of the finest trommel, 1/16-in., is classified through 1 spigot for a jig, and 3 spigots for tables. Jigs are bedded with soft-steel punchings, 1/8- to 5/8-in.; speeds, 140 r.p.m. on coarsest, 220 r.p.m. on finest jig. Of the total mill feed, 4 primary jigs treat 88.7%, collect 1.82% in concentrate, reject 84.5% in tailings, and deliver 2.34% as middlings. A mill test gave the data in Table 8 for primary jigs only. Combined jig and table concentrates, averaging 56% Sn, 6.5% WO_3, are separated magnetically. Combined middlings (10.9% Sn, 1.3% WO_3, 12% Fe, 4% Cu, 7% Zn, 0.5% As, 25% S) are roasted, roll-crushed through 1/8-in., and sized at 1/16-in., making feed for two 2-compartment jigs. Recovery in the whole operation is 87%; ratio of concentration 43.5 : 1. Harz jigs on MALAYAN TIN DREDGES (*52 MM 244*), treating gravel in which most of the cassiterite is finer than 10-m., usually have 4 hutches

48 in. long; screen, 42 in. wide; piston compartment, 36 in. wide; bottom slope, 38°; depth of longitudinal partition below screen, 15 in. for fine, 10 1/2 in. for coarser jigs. Drop between screens, 2 to 3 in. for unsized feed, 1 in. for close work on sized feeds; tailboards, 4 in. high on roughing, 3 in. on cleaning jigs. Jigs with screens set at uniform slope from feed to discharge end have been used, aiming to increase

Table 8. Jigging of tin-tungsten ore, Aberfoyle, Tasmania

Jigging size	3/8~1/4 in.		1/4~5/32 in.		5/32~1/16 in.		< 1/16-in. deslimed	
Feed:								
Per cent. of mill feed.	35.4		25.7		14.4		13.1	
Assay, % Sn.....	0.84		1.09		2.45		3.56	
	Wgt., %	Sn distribution	Wgt., %	Sn distribution	Wgt., %	Sn distribution	Wgt., %	Sn distribution
Concentrate.....	1.22	71.20	1.32	68.71	3.18	75.11	4.50	78.45
Middling.....	2.43	15.71	2.22	21.23	2.70	18.67	3.97	15.49
Tailing.....	96.35	13.09	96.46	10.06	94.12	6.22	91.53	6.06

capacity, but are more difficult to adjust and control. Pistons are of 2-in. board, reinforced at both ends by 2×1/4-in. iron straps, top and bottom, and having an A-shaped iron bracket for rigid attachment of piston rod. If loose-fitting, clearance is 3/8 to 5/8 in.; if tight-fitting, the piston is provided with downward-opening clack valves; a 36×48-in. piston may have 14 such valves, each with 4-in.

Table 9. Data on Harz jigs, Cia. de Minas de Colquiri, Bolivia

Size treated.....	5/8~3/8 in.	3/8 in.~6-mm.	6~1 3/4-mm.
Tons (dry) feed per 24 hr....	250	200	75
Ratio water to solids in feed..	2.2	1.3	12.5
Depth of bed, in.....	8	8	10
Speed, r.p.m.....	208	235	287
Length of stroke, in.			
Compartment 1.....	1 1/2	3/4	1
" 2.....	1 1/4	5/8	7/8
" 3.....	1	5/8	7/8
" 4.....	7/8	1/2	3/4
Tons conc. per 24 hr.....	145	140	50
Assay of concentrate.....	*a*	*a*	*a*
Tons (dry) tailing per 24 hr..	105	60	25
Assay of tailing, % Sn.....	0.75	0.75	0.85
Ratio water to solids in tailing	11.2	27.6	21.7

a Combined concentrates, 4.66% Sn.

square opening, distributed as in Fig. 39. Too much suction produces a low-grade hutch concentrate. Usual screen is 1/16-in. sheet with slotted holes 1/2 to 5/8 in. long by 1/8 in. wide for roughing, or 1/16 in. for cleaning jig; long dimension of slot is crosswise of the flow. Screen is reinforced above and below by identical iron grids with webs 3 in. deep; grid above the screen provides pockets for maintaining the bed. Most satisfactory bedding is crushed hematite, sized at 3/8- to 1/2-in. for roughing, or about 1/4-in. for cleaning jig; usual depth, 3 in. Rubber, or rubber-lined hutch discharge spigots are satisfactory. Speeds for average feed are 140 to 160 @ 3/8-in. s.p.m. for roughing jigs; 160 to 180 @ 3/16-in. s.p.m. for cleaners. Water for a 4-cell jig with above dimensions, 640 g.p.m. for all purposes. Feed to such a jig should not exceed 20,000 cyd. per mo. A correctly operated jig may lose less than 1% of the tin in the gravel, and makes satisfactory recovery of cassiterite as fine as 0.25 mm. Slope of launder for transferring rougher concentrates to cleaning jigs is about 1 : 6 unless additional launder water is supplied. If dewatering is required, a spitzkasten of at least 8-cu.ft. capacity should be installed ahead of each cleaner. Of 119 tin dredges working in Malaya in 1931, 62 employed jigs, and 57 sluices only (*30 ME 217*); the largest at that time had 14-cu.ft. buckets, could dig at 130-ft. depth, and treat 326,750 cyd. per mo. A dredge might have 10 to 16 roughing, and 1 to 3 cleaning jigs, the latter making a concentrate with 25 to 50% Sn which was enriched to 72% Sn by further treatment on shore. At the DJEBEL-TROZZA mines, 2 Standard (Harz-type) jigs, with combined screen area of 6.4 sq. meters, treat 9 metric tons per hr. (140 kg. per sq. dcm.) of an ore averaging 3.5 to 4% Pb in form of galena and cerussite in a gangue of quartz, shale, and granitic rocks, affording an easy separation (*8 Rev. de l'Ind. Minerale, pt. 1, 158*). Two jigging sizes,

Table 10. Harz-jig feeds, Chaupi mill, Potosí, Bolivia (Sec. 2, Fig. 153)

Coarse jig		Fine jig	
Mesh	% Wgt.	Mesh	% Wgt.
4	2.0	20	4.9
6	11.0	28	13.5
8	34.0	35	17.2
10	23.3	48	18.4
14	17.3	65	14.9
20	8.2	100	10.1
<20	4.2	150	4.9
		200	6.3
	100.0	<200	9.8
			100.0

1~5- and 5~15-mm., are made on a single vibrating screen. Jig screens (62 cm. wide) are perforated sheet with 7-mm. holes for the coarse, and 3.5-mm. for the fine, jig. Piston of the coarse jig makes 130 @ 35-mm. s.p.m.; of the fine jig, 155 @ 25-mm. s.p.m. Water, 320 liters per min.; power, 16 hp. The jigs discharge about 50% of clean tailing; concentrate assays 61% Pb. In reconstruction of the mill, these 2 jigs replaced 5 coarse and 9 fine ordinary Harz jigs, with combined screen area of 16.2 sq. meters, which previously had treated only 7 t.p.h., after close sizing on 5 vibrating screens, and with consumption of 1,120 liters of water per min. The new arrangement employed 6 fewer men and saved 0.70 franc per ton in wages. CIA. DE MINAS DE COLQUIRI, Bolivia, uses 4-compartment HARZ jigs for initial treatment of its complex tin ore; sole purpose of the jigs is to discard tailing. Mine ore averages 3% Sn, 26% SiO_2, 22% Al_2O_3, with sulphides of Fe, Pb, Zn, Cu, Sb, and Ag. Removal of 65 tons of hand-picked waste leaves 525 t.p.d., averaging 3.88% Sn, to be treated by the jigs at 3 sizes. All compartments are 18 × 32 in., fitted with steel-plate screens having 4-mm. round holes; life, about 30 days. Each jig takes 3 hp. Additional data are in Table 9. In the pyrite section of its Chaupi mill, CIA. DEL CERRO DE POTOSÍ, Bolivia, treating a complex tin ore, uses two 4-compartment Harz coarse jigs (in parallel with one 3-compartment Bendelari, Art. 7), and one 2-compartment Harz fine jig, all locally constructed. Purpose of the coarse jigs, immediately following primary crushing and screening, is to discard largest economic amount of tailing and produce a rough pyrite-cassiterite hutch concentrate for recrushing; that of the fine jig, treating original fines, is to extract a fairly clean pyrite concentrate and thus relieve the work of tables cleaning fine jig tailing. All Harz jigs have 24×36-in. screens of iron sheet punched with square holes; life 30 days. Bedding is 1/2-in. pyrite, 3 in. deep. Table 10 gives screen analyses of feeds; operating data in Table 11. Middlings from the fourth compartments of the coarse jigs return to the head of the jig without further reduction.

Table 11. Harz-jig operation, Chaupi mill, Potosí, Bolivia (Sec. 2, Fig. 153)

	Coarse jig	Fine jig
Size feed (see Table 10), mm.	3.56~0.89	<0.89
Compartments (24×36 in.)	4	2
Feed per day, met. tons	150	100
Per cent. water in feed	50	70
Screen aperture (square), mm.:		
Compartment 1	4	2
" 2	4	2
" 3	6	.....
" 4	6	.....
Speed, r.p.m.	230	270
Stroke, in.:		
Compartment 1	1	1/2
" 2	7/8	3/8
" 3	3/4	.....
" 4	5/8	.....
Power, hp.	3	2
Assays, % Sn:		
Feed	2.0–2.5	1.9
Concentrate	3.0–4.0	3.0
Middling	2.0	.....
Tailing	0.4–0.6	1.0

4. COOLEY JIG

Description. This is a variant of the Harz type used extensively in the Mid-Continent zinc fields. Its only essential difference from the ordinary Harz jig is that it is almost always used to make hutch only and no screen discharge is provided, except sometimes for middlings. Coarse concentrate and middling are shoveled off intermittently as operation demands. Attempts to run with continuous draw of rich bed concentrate result in hard beds, with impaired jigging action, and the discharge of a large amount of low-grade material. If the amount of coarse concentrate and middling is large, it is usual, in the case of the middling at least, to use a coarse screen and jig through an artificial bed, using long stroke, low speed, shallow bed and high drop between screens.

Construction. The usual method of construction is cheap and highly efficient. The floor is built up of 3 layers of 1-in. T-and-G boards laid in white lead or asphalt paint and nailed flat; walls and partitions are 2×4-in. studs, dressed, laid flat and nailed, with two strips of cotton wicking, saturated with white lead, laid between. The front of the hutch is stepped out 8 to 10 in., then carried up straight. The walls of the plunger compartment are carried up to give support to the journal boxes and to prevent splashing. The entire jig is lined with 1-in. boards and these are also used to form a sloping bottom for the hutch. The usual sizes of screen compartments are from 20 to 42 in. wide by 24 to 48 in. long with 6- to 9-in. tailboards on the first compartment ranging down to 5- or 6-in. on the last. Practice as to depth of bed varies. A deep bed requires much water, which sends fine free mineral to the later cells. These are made hard by the swift flow of excess top water and as a result the fine mineral goes into the tailing. Excess top water in the tail end of the jig may be eliminated by breaking the jig in two and dewatering before the last cells. A common drop in the 30×36-in. size is 1 3/4 in.; in a 42×48-in. jig at the MEDIA MILL, a 3-in. drop was used. Punched-plate screens are common. The sieves are sloped downward toward the tailing end, as much as 1 in. in their length, in order to compensate for the greater weight of concentrate at the head end and prevent uneven water distribution.

Number of compartments. Jigs used to make clean concentrate and tailing on 3/8-in. or 5/8-in. screen undersize (one-jig mills) are 7- to 9-compartment. In such a jig, cell No. 1 is used for clean

lead concentrate, cell No. 2 makes a lead-zinc middling that is either circulated or reground; cells 3 to 5 produce clean zinc concentrate and, in a 9-cell jig, cells 6 and 7 are also used to make clean zinc; the last two cells produce middling for regrinding. The greater number of cells is used for high-grade feeds or with ores containing much lead; in the latter case cell No. 3 may also make middling and cell No. 4 may be the first zinc cell. Single-jig treatment is suitable only for low-grade, coarsely disseminated ores low in lead. If there is much lead it will appear in the zinc concentrate. With the 2-jig arrangement the combined hutch products of the first or rougher jig carrying 10 to 25% zinc, locally called SMITTEM, are sent to the cleaner; tailing is discarded. Some, but very little, blende finer than 200-m. is caught on these jigs and about 30% of the zinc in the tailing is this fine material. Finished concentrate, assaying 75 to 80% lead, is taken from the first hutch of the cleaner, the second hutch is sent back to the head of the cleaner, hutches 3 to 6 are clean zinc concentrate assaying 50 to 60% zinc, and hutch 7 is returned to the head of the cleaner or reground, depending upon whether the values are free or locked mineral. The latter material is locally called CHAT and assays from 4 to 8% zinc. The cleaner tailing is either thrown away or sent to a sand jig of 3 to 5 cells, usually of smaller grate area than the cleaners.

Operation. Rougher jigs are run at 90 to 125 @ 5/8- to as much as 2 1/2-in. s.p.m.; cleaners at 160 to 200 @ 3/8- to 3/4-in. strokes, and sand jigs at 150 to 190 @ 1/8- to 1/2-in. strokes. Some mills use special CHAT JIGS of 4 to 5 cells run at higher speed and shorter stroke than the cleaner jigs. Typical adjustments are shown in Table 12. In some cases the drive shaft is in two sections and the head end is driven at 20 to 30 r.p.m. less than the tail end. All jigs are run with strong suction, which is enhanced by leaving the hutch gates partly open. To make rich lead concentrate requires high-grade feed. There is an advantage in sending the first rougher-jig hutch to a small separate jig; otherwise it is necessary to build up the grade of the cleaner feed by circulation of the lead concentrate. Water consumption ranges from 800 to 1,200 g.p.m. for a 7- to 9-cell jig. A common figure for estimate is 1,500 to 2,500 g.p.t. treated. The capacity of a rougher is from 8 to 12 tons per sq. ft. of screen surface per 24 hr.; for a cleaner 3 to 4; for a single-jig mill, 4 to 5 tons.

Table 12. Operating adjustments on Cooley jigs treating Wisconsin lead-zinc ores
(104 J 89)

Cell number	Revolutions per minute	Screen aperture, inch	Stroke length, inches	Depth of bed, inches	Pitch of bridge, inch
8-cell rougher jig, 30×36-in.					
1	115	1/8	1 3/4	6	3/4
2	115	3/16	1	6	3/4
3	115	1/4	1 1/2	6	3/4
4	115	1/4	1 1/4	6	3/4
5	125	1/4	1 1/2	6	3/4
6	125	3/16	1 1/8	6	3/4
7	125	3/16	1 1/8	6	3/4
8	125	3/16	1 5/16	5	3/4
7-cell cleaner, 30×36-in.					
1	220	3/32	7/16	6	3/4
2	220	1/8	7/16	6	3/4
3	220	3/16	5/16	6	3/4
4	240	3/16	3/8	6	3/4
5	240	3/16	3/8	6	3/4
6	240	1/8	3/8	6	3/4
7	240	3/16	7/16	7	3/4

Performance. In the Tri-State field in 1934 (*112 A 861*) the Cooley jig served 3 purposes: (*a*) Roughing into low-grade concentrate, middling, and tailing for discard; (*b*) cleaning rough concentrate; (*c*) treating the recrushed middling from the rougher and tailing from the cleaning jig, discarding its tailing and returning its rough concentrate and middling for further treatment.

Roughing jigs receive deslimed roll product, commonly <1/2-in., containing 2 or 3% <65-m. (Tables 13, 14). Usual roughing jig has 6 cells in series, 42(wide)×48-in., with 3-in. drop. Piston compartment is 4 in. wider than the screen. Throat (see Fig. 35) is about 2/3 width of screen; depth of partition, 0.4 width of screen. Minimum bottom slopes (PITCH) in last cell, 34°; in others pitch boards are set to maintain the same throat in all cells. Tailboards are 6 to 8 in. high. Water usually enters above piston. Screens normally range from 1/4-in. in the first to 1/8-in. in the last two or three compartments. Speed, 90 to 120 @ 1- to 2-in. s.p.m.; variations within these limits are compensated by stroke and piston water to maintain suitable bed conditions. A 6-cell @ 42×48-in. jig treats 25 to 30 t.p.h. Rough concentrate from the first 4 cells, amounting to 15 to 30% of the jig feed, assaying 25 to 30% Zn, and accounting for 80 to 85% of the values fed, passes directly to the cleaning jig. Of free mineral in the feed, 95% is recovered here with no particular difficulty. Screen concentrate from the first 4 compartments is removed by hand and joins the corresponding hutch products. Frequent and rather drastic hammering is required to keep the screen apertures open. Middling from the last 2 cells, amounting to 5 to 10% of the feed, assaying 4 to 8% Zn, and accounting for 5 to 10% of the values, is recrushed and rejigged. Concentrate on these two screens is usually drawn continuously; the most

satisfactory draw (CHATTER) is a 2-in. pipe with 3/4-in. slots spaced 4 in., which is set horizontally across the screen close to the tailboard; extra water may be supplied at the inner end to assist discharge. The relatively low sp. gr. of the middling and the large volume of jig water over the last 2 cells make it difficult to separate clean tailing. Rougher-jig tailing represents 60 to 80% of the feed, assays 0.75 to 1.00% Zn in a well-regulated mill and considerably higher in others, and contains 10 to 15% of the values; it is deslimed and dewatered before discard. Grade of tailing made is governed by the amount of middling removed and the retreatment cost, and is varied with the market for zinc concentrate.

Table 13. Performance of Cooley roughing jig, Tri-State District

	Feed	Concentrate (Smittem)	Middling (Chats)	Tailing
Per cent. by weight....	100.0	19.5	3.0	77.5
Zinc assay, %.....	7.5	32.3	11.8	1.2
Zinc distribution, %...	100.0	83.5	4.7	11.8

Screen mesh	Feed		Tailing	
	Wgt., %	Zn, %	Wgt., %	Zn, %
On 6.....	58.5	7.32	57.44	1.26
14.....	28.4	5.39	30.68	0.81
28.....	7.2	10.86	6.77	0.68
65.....	4.1	11.71	3.90	1.42
<65.....	1.8	25.06	1.21	6.30
Total.....	100.0	7.53	100.00	1.15

Cleaning jig receives combined rough concentrate as above after desliming. It resembles the roughing jig, but usually has 7 @ 36×42- or ×48-in. cells with 1.5-in. drop; speed, 160 to 165 s.p.m.; stroke length ranges from 1 3/4 in. on the first to 3/4 in. on the last cell; screen apertures as in Table 15. The first cell (and sometimes the second) makes finished lead concentrate; the next, a mixed Pb-Zn concentrate which returns to head of the jig; the remaining cells yield finished zinc concentrate, except that the product of the last cell is sometimes returned to head of the jig. A sufficient depth of natural bedding is maintained to insure clean hutch products. Excess bedding is removed by hand,

Table 14. Screen analyses of Cooley roughing-jig feed and tailing

Size	Feed					Tailing		
	Wgt., %	Assay, %		Distrib., %		Wgt., %	Assay, % Zn	Distrib., % Zn
		Zn	Pb	Zn	Pb			
>3/8-in.	17.8	5.1	0.6	12.0	5.9	17.0	0.7	12.2
1/4	24.5	6.7	1.2	21.6	17.8	27.7	1.0	30.6
1/8	26.4	6.5	1.2	22.6	19.9	32.5	1.0	36.7
10-m.	8.2	6.9	1.2	7.4	5.9	10.4	1.0	10.8
20	8.7	8.5	2.5	9.7	13.2	8.6	0.6	6.0
35	6.8	10.7	3.2	9.6	13.1	3.0	0.5	1.5
48	2.1	13.4	3.6	3.7	4.5	0.4	0.6	0.2
65	1.8	14.6	3.4	3.4	3.7	0.7	0.9	0.1
<65	3.8	20.2	7.0	10.0	15.9	0.3	5.0	1.8
Total	100.0	7.6	1.7	100.0	100.0	100.0	0.9	100.0

by dam and gate, by chatter (see above), or by PIN DRAWS, which are 3/4-in. round iron bars fitting holes punched in the screen, and are withdrawn at intervals to discharge into the hutch. Tailing joins roughing-jig middling. Lead concentrate assays 79 to 84% Pb, 1.5 to 2.5% Zn; zinc concentrate, 57 to 62% Zn, 1 to 1.5% Pb; sized as in Table 15.

Chat-roughing (or CHAT-SLOUGHING) jig is one of several means employed for retreating rougher middling and cleaner tailing. These products combined are recrushed (usually by rolls) to <1/8- or 3/16-in. and deslimed. The jig usually has 5 cells, 36×42-in. to 42×48-in., with 1.5- to 3-in. drop. Speed, 160 to 180 @ 1- to 0.75-in. s.p.m. Screens are either fine with natural bedding, or coarse and bedded with screen concentrate from the rougher; excess bed is drawn in same way as from the cleaning jig. Product of first 2 cells returns to the cleaning jig; middling from remaining cells, enriched to about twice the value of the feed, is further treated on tables or by flotation; tailing, amounting to 50 to 60% of the feed to the jig (about 5% of mill feed), and assaying 1.5 to 2% Zn, is discarded. If original middling is crushed to 2- to 2.5-mm. the jig (then called a SAND-CLEANER) may make clean zinc concentrate from two or more hutches, and tailing may be further treated. Table 16 gives the performance of such a jig working on 2.5-mm. deslimed feed.

Jig practice would probably be improved by roughing for clean mineral only (on a shorter jig), dewatering rougher tailing, scavenging for two grades of middling, combining the high-grade with cleaner tailing, and crushing the low-grade to 28-m. for classifier-table treatment.

Recent practice indicates that initial roughing by sink-float is superior to rough jigging from both metallurgical and cost standpoints. See Art. 30, and Sec. 2, Fig. 117.

In the WISCONSIN DISTRICT (*111 J 1065*) the average recovery from 1.75% Zn feed is 55 to 60% in a 48% concentrate; tailing averages about 0.6% Zn, of which the part >10-m. runs about 0.4% Zn, the >40-m. 0.95%, and slime, 8%. On 6% feed through 3/8 in., jig mills in this district make 65 to 70% recovery in a 45 to 50% concentrate carrying less than 3% CaO; about 75 to 80% of the concentrate is >20-m. AMERICAN ZINC CO., at Mascot, Tenn. (dolomite-sphalerite ore), made coarse concentrate on a 6-cell roughing and 7-cell cleaning jig, recrushing all tailings for flotation. Feed to the roughing jig was nearly all <3/8-in., 19% >1/4-in., 42.2% >8-m., and 38.4% <8-m.; it averaged 3.8% Zn and carried 37% of water (*Q*). Screen compartments were 32 (wide) × 48-in. on the rougher, 28 × 42-in. on the cleaner. Screens, 14-gage steel plate with slots respectively 1 × 3/16 in. and 1 × 1/8 in.; life, 92 days. Beds, 8 to 10 in. deep. The rougher treated 600 tons per 24 hr.; water, 460 g.p.m.; power, 18 hp. Speed, both 110 r.p.m. Length of stroke, rougher, 1 5/8 in. in the first two, 1 1/2 in. in the next two, and 1 3/8 in. in the last two compartments; cleaner, 5/8 in. on the first, 1/2 in. on the next four, and 3/8 in. on the last two compartments. One man attended 2 jigs, making all adjustments except speed; substantially no time was lost. For present practice see Art. 30, and Sec. 2, Fig. 102.

Table 15. Performance of Cooley 7-cell cleaning jig, [a] Tri-State District

Cell no.	1	2	3	4	5	6	7
Screen aperture, in.	3/16	3/16	1/4	1/4	3/16	1/8	1/8
Stroke, in.	1.75	1.5	1.75	1.25	1.25	1	0.75

Products	Weight		Assays, %		Distribution, %	
	T.p.h.	%	Zn	Pb	Zn	Pb
Feed	7.6	100.0	32.0	13.8	100.0	100.0
Zinc concentrate	3.8	50.2	58.6	1.6	92.0	5.8
Lead concentrate	1.2	16.0	2.7	80.2	1.4	93.2
Tailing	2.6	33.8	6.4	0.4	6.7	1.0

Screen analysis	Zn conc.	Pb conc.
All <3/8-in.		
8-m.	29.1	30.2
20	34.2	32.2
30	17.7	14.2
60	13.7	9.2
<60	5.3	14.2
	100.0	100.0

a 36×42 in. Speed, 164 s.p.m.

As employed on some MALAYAN TIN DREDGES in 1929 (*59 IMM 130*) Cooley roughing jigs had 3 or (preferably) 4 completely separated cells usually 3 ft. wide by 4 ft. long; on clean-up jigs, treating hutch product of the roughers, 4 cells were desirable. Screens on both jigs were most commonly of sheet steel with punched slots 1/2 × 1/8 in.; crimped wire screen, with same aperture and of about 0.11-in. wire, was equally serviceable and gave more open space. Screens were not in horizontal steps, but had a continuous slope of 1 : 16 for full length of jig. Preferred bedding was hard hematite, crushed to 3/4- to 3/16-in., rounded by a preliminary tumbling for about 2 hr. in a 4-ft. revolving drum, and rescreened over 1/8-in.; bedding for the clean-up jigs was sized through 3/8-in. screen. Hematite beds were about 2 1/2 in. deep, maintained by cross bars in the holding-down frame; weight, about 34 lb. of prepared material per sq. ft. of screen. Jig beds of sized, coarse cassiterite proved unsatisfactory. Speed of roughing jigs was usually 110 r.p.m. (faster when heavily loaded); of clean-up jigs, 190 r.p.m.; length of stroke was then adjusted to correct performance at those speeds.

Table 16. Performance of sand-cleaner jig, Tri-State District

	Feed			Concentrate	Tailing		
Weight, %	100.0			9.7	90.3		
Assay, % Zn	7.8			57.0	2.4		
Distribution of Zn, %	100.0			71.4	28.6		
Screen, mesh	Wgt., %	Assay, % Zn	Distribution of Zn, %		Wgt., %	Assay, % Zn	Distribution of Zn, %
>10	6.3	8.5	7.1	.....	11.0	1.8	9.3
20	41.6	7.4	39.9	.....	43.3	1.8	36.1
35	36.7	6.1	29.2	.....	31.2	1.5	21.1
48	6.8	7.3	6.5	.....	6.2	1.6	4.4
65	3.7	10.4	5.0	.....	3.6	2.4	4.0
<65	4.8	19.4	12.2	.....	4.7	11.6	25.0
Total	100.0	7.7	100.0		100.0	2.2	100.0

5. MAY DUPLEX JIG

May duplex jig (*44 Aa 225; 72 Aa 113; 88 Aa 247*) has been universally adopted for coarse concentration (followed by tabling and flotation) of lead-zinc-silver ores in the BROKEN HILL district, N.S.W. It consists substantially of two identical and parallel jigs, back to back, wholly independent except as to their driving mechanism, of rocker-arm type, operated by a common shaft. Number of compartments in series ranges from 3 to 5; the last compartment, without screen or plunger, occupies the full width of the jig and serves to collect tailing and to regulate, through a float valve, the flow of wash water to the jig. Dimensions and operating data at 5 mills active in 1928 are given in Table 17.

Table 17. Performance of May duplex jigs at Broken Hill, N. S. W., in 1928

	Broken Hill South *c*	Zinc Corporation	Sulphide Corp. Central Mine	Broken Hill Proprietary	No. Broken Hill, North mine
No. of compartments *a*	3	3	4	3	5
Length of compartments, ft.	3	3.75	3.33	3.33	3.75
Width of screen compartment, ft.	2 1/2	2 1/2	2 3/4	2 3/4	2 3/4
Width of piston compartment, ft.	1 1/3	1 1/4	1 1/3	1 1/4	1 1/4
Screen aperture, mm.	4 rd.	4 & 3.5	6-m.	4 rd.	3.6 & 3.2
Aperture of supporting grid, in.	5×2.5	.....	7×3	.....	7×3
Bedding material	Rd. iron rod	Rd. iron rod	Rd. iron rod	.....	Punchings
Bedding size, in.	5/16×3/8	8/8×7/16	1/4×1/4	.....	1/4 to 3/8
Bedding depth, in.	2	.....	.....	.....	1.25
Area of piston, in.	35 1/2×13 3/4 *b*	44 1/4×14 1/4	40×16	40×14 1/2	44 1/2×14 1/2
Clack valves, in.	2 @ 8 1/2×6	.....	2 @ 4×4	.....	.....
Strokes per min.	190	260	200	.....	220
Lengths of stroke, in.	1 1/2; 1 3/4	1	.....	.....	3/4
Max. size of feed, mm.	4.2	3.0	3.2	3.2	3.2 *d*
Average assays, %	Pb Zn	Pb Zn	Pb Zn	Pb Zn	Pb Zn
Feed	18.2 11.3	16.0 11.0	18.5 16.0	13.0 14.0	14.3 10.7
Concentrate	70.5 4.6	71.4 5.2	67.0 7.0	65.0 6.5	72.0 6.2
Middling	46.5 9.4	....	....	....	35.7 13.1
Tailing	8.3 11.5	....	8.0 17.0	7.5 13.5	7.6 14.7

a Lengthwise of the jig, and including idle compartment at tailing end; complete jig has twice as many compartments.

b 5 in. below screen at central position; power consumption, 0.83 hp. per piston.

c Tons per hr. per duplex jig: Feed, 13.2, of which, 75% through 4-mm. rd., and 25% through 4.2-mm. sq. hole; all deslimed; concentrate, 0.9 to 1.0; middling, 1.1; tailing, 11.2.

d Not deslimed.

Products are drawn exclusively through the hutch. Screen rests on a cast-iron grid, and is covered by a similar grid, cast in soft brass, with webs about 2 in. deep, forming pockets to retain the bedding, which consists usually of short cylindrical pieces cut from round iron rod. Feed is roll product, screened through 3- to 4.2-mm. holes, and deslimed in drag classifiers of Esperanza type.

In the BROKEN HILL SOUTH mill, in 1931, with 2 (active) compartments, the first delivered a finished galena concentrate; the second, a Pb-Zn middling which was reclassified and returned to the jig (without intermediate crushing); tailing, carrying all of the blende except that unavoidably caught in the lead concentrate, was recrushed for tabling and flotation. Data on these products are given in Table 18. In some of the other mills, all of the active compartments deliver galena concentrate, all mixed grains being thrown into the tailing for retreatment. The typical gangue minerals of the district are calcite, rhodonite, garnets, feldspars, fluorspar, and quartz. Sulphides other than galena and blende include pyrite and pyrrhotite, with minor amounts of arsenopyrite and chalcopyrite. Galena is relatively coarse throughout the district.

6. OTHER PLUNGER JIGS FOR ORES

Collom jig has a special plunger mechanism which gives a quick downward stroke and retarded return. The mechanism has link-operated rocking hammers striking the plunger rods down sharply against the pressure of springs which lift the plungers more slowly. The plungers may be fitted more tightly than the eccentric-driven type, because of their non-rocking travel, but the mechanism is more complicated and less rugged than the

Table 18. Sizing-assay analysis on each of four May duplex jigs, Broken Hill South mill, second half of 1931

Screen, mm.	Feed [a] 13.8 t.p.h.				Concentrate 1 t.p.h.			
	% Wgt.	Assay			% Wgt.	Assay		
		Pb, %	Ag, oz.	Zn, %		Pb, %	Ag, oz.	Zn, %
0.421	49.0	13.0	5.8	10.8	40.5	76.9	21.7	3.9
.317	8.9	21.5	8.1	13.5	14.3	79.7	21.4	2.6
.211	12.0	23.2	8.3	12.9	19.5	79.7	21.1	2.6
.157	6.9	20.4	7.8	12.8	9.0	77.7	21.4	2.5
.107	5.2	20.7	7.8	12.6	6.2	76.7	20.4	2.7
.063	10.3	20.0	8.6	14.6	7.6	70.9	18.5	2.6
<.063	7.7	25.1	11.2	15.6	2.9	61.9	17.8	7.9
Total	100.0	17.5	7.2	12.2	100.0	77.0	21.0	3.3
Screen, mm.	Middling [b] 1 t.p.h.				Tailing [c] 11.8 t.p.h.			
	% Wgt.	Assay			% Wgt.	Assay		
		Pb, %	Ag, oz.	Zn, %		Pb, %	Ag, oz.	Zn, %
0.421	24.0	57.6	17.6	10.7	51.9	7.1	4.3	11.2
.317	9.2	69.6	18.9	6.3	8.4	9.0	5.3	15.8
.211	14.7	69.6	18.9	5.4	11.2	9.9	5.3	15.2
.157	7.2	62.0	15.6	5.0	6.6	10.2	5.6	14.7
.107	7.5	48.2	12.4	5.0	5.0	11.6	5.9	14.6
.063	18.9	27.2	9.1	10.3	9.8	15.5	7.9	16.0
<.063	18.5	26.2	10.4	15.2	7.1	23.7	11.2	16.0
Total	100.0	48.5	14.4	9.4	100.0	10.0	5.5	13.2

a Previously roll-crushed to pass 4.2-mm. square hole, and deslimed in Esperanza type drag-belt classifier; also includes returned middling.
b Returned to jig without further crushing.
c Recrushed for tabling and flotation.

simple eccentric. The jig is built double with sieve compartments outside of the plunger compartments; these are about half the area of the sieve compartments and are placed side by side, each occupying one-half the length of the jig. This causes maximum water effect at the feed end of one compartment, which is not distinctly harmful, and at the tailing end of the other compartment, which is harmful. Distribution of water is partly equalized by a horizontal partition below each plunger, of which the quarter nearest center of its corresponding screen compartment is open for passage of water.

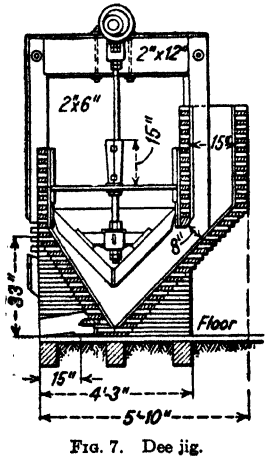

FIG. 7. Dee jig.

Dee jig (Fig. 7) has a hopper-shaped valved plunger under the screen with the plunger rod passing through the center of the screen. The valved plunger decreases suction and gives uniform distribution of water currents, but at the expense of great inconvenience in operation and maintenance. The cribbed construction is also found in jigs of the Harz type.

Hodge jig is of the Harz type but has a mechanism for attaining differential plunger motion. It has been used to a considerable extent in the LAKE SUPERIOR copper mills. It is built in cast-iron double units which are set up in pyramid arrangement.

Performance. At COPPER RANGE mills four double Hodge jigs with 24×36-in. compartments are used in series. They are fitted with double-crimped brass-wire screens of the following sizes: 8-m. No. 18 wire on No. 1 (life, 324 days); 10-mesh, No. 20 wire on No. 2 (life, 405 days); 12-mesh, No. 21 wire on No. 3 (life, 260 days); 14-m. No. 22 wire on No. 4 (life, 260 days). Speed of all jigs, 165 s.p.m., @ 7/8-, 3/4-, 5/8- and 1/2-in. respectively, with 2.75- to 3-in. beds. Capacities: First sieve, 21 tons per 24 hr.; second, 16; third, 9; fourth, 6. Water consumption ranges from 160 g.p.m. on No. 1 to 100 g.p.m. on No. 4. Power consumption, 0.52 hp. per sieve. Feed contains 80 to 85% water. Assays: Tailing, 0.5%; concentrate, 65% Cu.

New Century jig is usually equipped with a differential motion giving accelerated down stroke to the plunger with corresponding accentuation of pulsion. Suction is decreased

by a rubber flap-valve around the plunger edge which closes on the down stroke and opens wide on the return. Differential motion is produced by raising the plunger against a spring by means of a cam lifting against a roller, the plunger being forced down quickly by the spring when the cam releases.

Performance. Notable installation was that of NEW JERSEY ZINC CO., separating closely sized willemite and zincite from a calcareous gangue, on 32 @ 6-compartment jigs with 24×36-in. sieves. Data concerning the installation at Franklin Furnace, N. J., are shown in Table 19. One man attended 4 machines. Lost time was 10 to 15%, which is exceptionally high, the principal cause being repairs. 5 hp. was consumed per jig. For present methods in this mill, see Art. 7.

Table 19. New Century jigs in N. J. Zinc Co. mill, as of 1925

Feed:								
Approx. size, mesh...	35~48	28~48	28~35	20~35	14~28	10~28	10~20	8~14
Tons per hr.....	0.77	0.84	0.91	0.98	1.04	1.10	1.16	1.24
Screen: Material.....	Brass	Brass	Brass	Steel	Steel	Steel	Steel	Steel
Aperture, mm.								
Cell 1, 2, 5, 6.....	0.953	1.168	1.397	1.651	1.930	2.134	2.438	2.870
Cell 3, 4.....	0.828	1.003	1.219	1.473	1.727	2.007	2.286	2.591
Life, days.....	150	150	150	75	75	75	75	75
Strokes per min.....	210	197	185	174	164	155	147	140
Stroke, in./64:								
Cell 1, 2.....	12	13	15	18	22	27	33	40
Cell 3, 4.....	11	12	14	17	21	26	32	39
Cell 5, 6.....	10	11	13	16	20	25	31	38
Water, g.p.m.....	52	59	67	76	86	97	109	122
Bed depth, in.								
Cell 1.....	4	4 1/4	4 1/2	4 3/4	5	5 1/4	5 1/2	5 3/4
Cell 2.....	4 1/8	4 3/8	4 5/8	4 7/8	5 1/8	5 3/8	5 5/8	5 7/8
Cell 3.....	4 1/4	4 1/2	4 3/4	5	5 1/4	5 1/2	5 3/4	6
Cell 4.....	4 3/8	4 5/8	4 7/8	5 1/8	5 3/8	5 5/8	5 7/8	6 1/8
Cell 5.....	3	3 1/4	3 1/2	3 3/4	4	4 1/4	4 1/2	4 3/4
Cell 6.....	3 1/2	3 3/4	4	4 1/4	4 1/2	4 3/4	5	5 1/4

Shields and Thielmann jig (Fig. 8) was used at the QUINCY mill for treating unclassified native-copper ore through 5/8-in. grates from steam stamps. The unit is a 4-compartment cast-iron jig tank, 12 (wide)×24- to 30-in., each hutch connected by a 4-in. pipe through the side wall with a vertical cylinder in which runs a piston, eccentrically operated from a common shaft. Eccentrics are individually adjustable and each hutch is fed by a separate water supply. Both gate and hutch discharge are provided.

A 4-section installation at the QUINCY mill treated 500 tons per 24 hr. Power consumption was between 3 and 4 hp. for the 16 compartments. The vertical screen between the sections caused size grading in successive discharges. Coarse copper, 3/8-in. to 5/8-in., discharged from gates 1 to 3. Clean concentrate was also taken from hutches 1 and 2. Gates 4 and 5 discharged coarse middling. Gates 6, 7 and 8 were kept closed to accumulate concentrate; gates 9 and 10 discharged middling for regrinding. The remaining sections discharged middling products of various sizes from 1/8-in. to 40-m. and of various grades from both gates and hutches. Slime (<40-m.) overflowed from the last compartment.

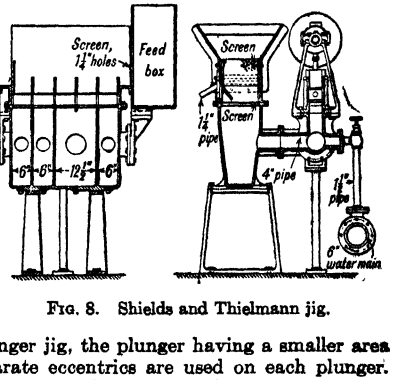

FIG. 8. Shields and Thielmann jig.

Woodbury jig (Fig. 9) is a quick-return plunger jig, the plunger having a smaller area than the sieve. Two plunger rods with separate eccentrics are used on each plunger. The jig is made in units that are erected end-to-end at different levels (PYRAMID SETTING), the feed entering over an apron above the plunger compartment. The jig is best known by reason of a slime-separating device on the first unit of a series treating ungraded feed. This consists of a shield *a*, which projects above the water level and dips sufficiently into the sand layer on the screen to prevent slime from entering at the bottom. Slime is thus diverted around the shield and overflows a dam at the discharge side of the compartment. This same dam serves to hold back sand tailing, which rises within shield *a* and overflows lip *b*. A concentrate cup *c*, within shield *a*, projects above the sand level and down into the concentrate layer on the screen, therefore allowing concentrate only to enter and overflow into pipe *d*. This pipe is connected with pressure water to allow fine sand to be excluded from the cup concentrate by classification. Deslimed sand tailing (middling) passes to a second unit fitted with the usual gate-and-dam concentrate discharge placed

however, at the tailing-discharge end of the compartment. When further units are used a dewatering trough is placed ahead of each subsequent unit and a similar device on the tailing-discharge box of the final unit.

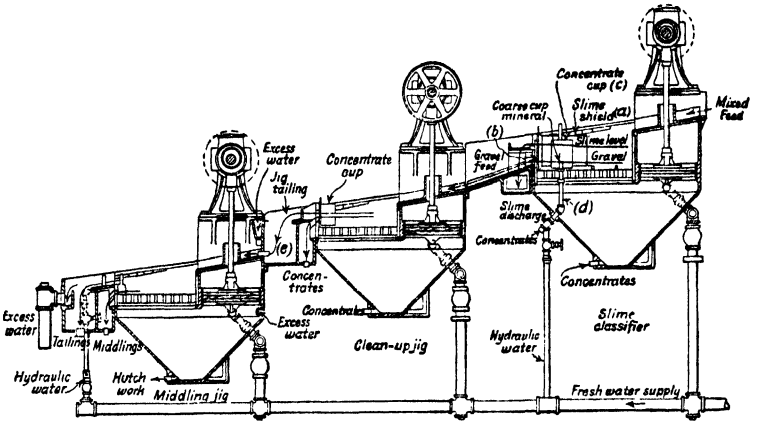

FIG. 9. Three-unit Woodbury jig.

Performances. At CALUMET & HECLA CONGLOMERATE MILL, in each of the 11 crushing units, two 4-cell jigs treat screen discharge from one steam stamp, or 150 tons per day for each jig. Sizing assay of feed, as in 1929 (*IC 6364*), is given in Table 20. Some coarse copper is removed by a mortar jig (*Ed. 1, p. 319*) without having to pass the 3/16-in. screen. The first compartment is 26 in. wide; of its length, 16 in. forms the plunger, and 35 in. the screen compartment. The other three tanks are 50 in. wide, each having a 16-in. plunger and a 30-in. screen compartment. Actual plunger dimensions, allowing for liners and clearance, are 14 3/4 × 24 in. for the first, and 14 1/2 × 48 in. for the other three compartments. Screens are of brass wire, 8-m. on the first two, 10-m. on the last two compartments, supported on wooden cross bars 3 in. deep and 2 in. apart. At customary speed of 195 r.p.m., strokes are 7/8-in. for the first, 3/4-in. for the second, and 5/8-in. for the other two compartments. Jig beds, 2 1/2 in. deep. Each screen compartment (after the first) has two dam-and-gate discharges for coarse concentrate, spaced 1 ft. each side of the centerline. As operated in 1929, on feed diluted with about 4 parts of water, by weight, the jig delivered 4 products: (*a*) Slime, all <60-m. and 93% <200-m., which was thickened for flotation; (*b*) hutchwork, through 10-m. jig screens, direct to Wilfley tables; (*c*) copper concentrate, from first 2 cells only, averaging 89.4% Cu and constituting 41% of the total gravity concentrate (56% from tables); (*d*) coarse and fine sands, all recrushed, together with table middling, for tabling and flotation. At the FREDA MILL of Copper Range Consolidated Co., a single-cell Woodbury jig extracts coarse copper, 90–92% Cu, from the product of a short-head Symons crusher set at 1/4-in. opening. Screen analysis of the jig feed (38% solids) is given in Table 21. Average assay of feed, 7.7% Cu; feed rate, 425 tons per 24 hr. Jig screen, 47 1/2 × 29 1/2 in., is sheet steel, 3/16-in. round holes; life about 400 @ 12-hr. days. Bed is 4 in. deep. Speed, 160 @ 2 1/2-in. s.p.m. Motor, 3 hp. Tailing, 1.0% Cu.

Table 20. Woodbury jig feed (1929), Calumet & Hecla Conglomerate mill

Mesh	Wgt., %	Cu, %	Mesh	Wgt., %	Cu, %
10	14.5	5.6	100	6.2	1.9
20	14.4	4.3	150	3.6	1.9
28	8.3	4.3	200	5.2	1.6
35	6.2	3.8	<200	28.3	1.1
48	7.2	3.0		100.0	3.0
65	6.1	2.2			

Table 21. Screen analysis of feed to Woodbury jig, Freda Mill

>0.371-in.	4.9%	35-m.	0.3%
3-m.	56.2	48	0.3
6	32.7	65	0.4
8	1.0	100	0.5
10	0.4	150	0.6
14	0.2	200	0.6
20	0.2	<200	1.7
28	0.1		100.0

At ANACONDA the Woodbury system was thoroughly tried but not adopted; Table 22 gives data on this test. When treating deslimed undersize of a 4-m. screen, a classifier jig and three retreatment jigs in series produced, from 127 tons per 24 hr. of feed containing 0.82% Cu, 15.5 tons of middling (concentrate) at 2.43%, 6.8 tons hydraulic middling assaying 1.14%, slime assaying 3.4%, and tailing assaying 0.45%. At OHIO BRASS CO. (*65 A 652*) a 2-compartment jig, first compartment 12 × 21 in. with 10-m. screen and 1 3/8-in. stroke, the second 18 × 24 in. with 6-m. screen and 3/4-in. stroke, 200 r.p.m., treated brass-foundry ashes sized between 3- and 10-m. on heavy-wire stationary screens set at 45°. Cup concentrate was almost pure metal (70 to 80% Cu) and represented 60 to

70% of the total metal in the feed; hutch concentrate assayed 65 to 70% Cu and contained about 20% of the total copper fed.

A diminutive type of single-cell Woodbury jig, without classifier or cup-discharge attachments, is available for installing in tube-mill grinding circuits; sulphides and coarse gold are extracted as a hutch

Table 22. Test of Woodbury 2-cell jig at Anaconda

	Classifying compartment		Regular compartment	
	Tons per 24 hr.	Assay, % Cu	Tons per 24 hr.	Assay, % Cu
Feed (<8-mm.)	242	2.70	49.6	3.09
Products:				
Slime (<0.4-mm.)	39.3	3.34	.....	.....
Cup concentrate	3.1	14.40	2.2	12.26
Hutch concentrate	11.6	9.11	6.4	7.68
Cup middling	138.8	1.43	14.6	1.74
Hutch middling	48.8	3.88	8.8	4.57
Tailing	.....	.....	17.6	0.62
Water, g.p.t. feed	859	.....	3,431	.....

concentrate. Standard sizes are 12×12- and 18×24-in.; the smaller jig will treat 25 to 50 tons per day of new feed, plus circulating loads up to 400%. WENDIGO GOLD MINES reports extraction of 80 to 95% of its recoverable gold by such a jig.

McLanahan-Stone jig has been widely applied to low-grade Lake Superior iron ores. Fig. 10 illustrates a 4-cell design employed at two manganese-ore plants in Tennessee (*IC 7145*). Distinguishing features are the circular, cast-iron plunger and the feeding of each cell with ore of a different size; in effect, the installation consists of 4 separate 1-cell

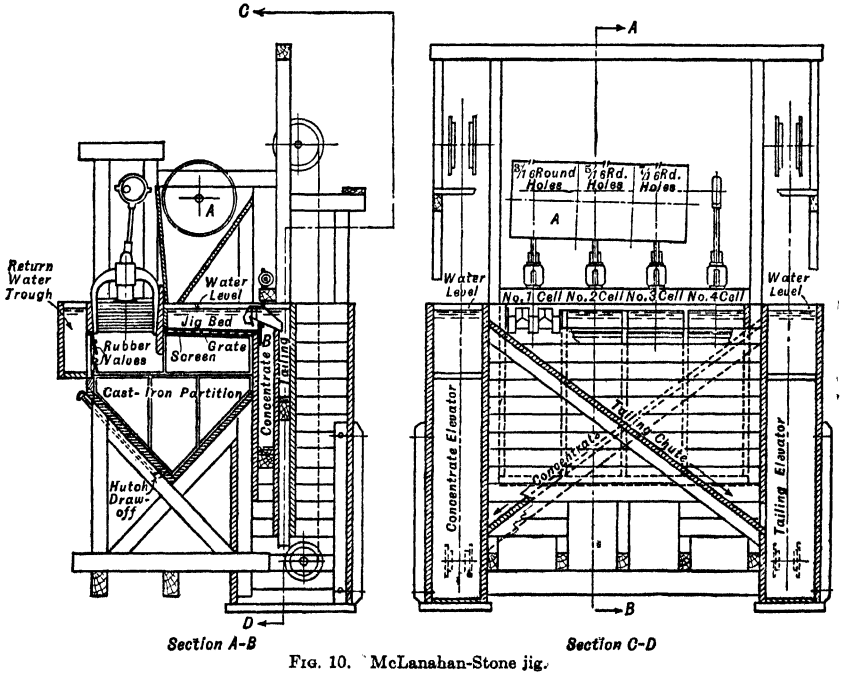

FIG. 10. McLanahan-Stone jig.

jigs consolidated for convenience in construction and operation. Feed, sized on the sectionalized trommel *A*, falls immediately into the rear end of the sieve compartment, the screen of which (supported by cast-iron grid) is slightly inclined toward the discharge end. (Other methods of sizing the feed are employed elsewhere.) Mesh of the jig screen is fine

enough to retain substantially all ore in the feed; hutch product is only incidental. The entire width of the discharge end of each cell is occupied by 2 adjustable gate-and-dam discharges for concentrate, and 3 spouts for tailing, the latter bridging the narrow concentrate receptacle *B* and delivering to a similar and parallel receptacle. The bottoms of these receptacles slope in opposite directions, whereby the concentrates descend to the foot of an elevator at one end of the jig, and the tailing similarly at the other. Both elevators have perforated buckets for draining products. Water stands at the same level in all compartments, collecting receptacles, and elevators; an open trough returns water from the concentrate elevator to the rear of the jig, whence the water enters the plunger compartments through clack valves, 2 or 3 for each cell; this arrangement accents the pulsion stroke and also economizes water.

Performance. EMBREE IRON Co. used a jig with four 48×27-in. cells to complete the enrichment of hand-sorted, log-washer concentrate of a nodular psilomelane ore <3/4-in. size, at the rate of 10 long tons per hr. of operating time, and consumed 18 hp.; water, 200 g.p.m. Adjustments are given in Table 23. EAST TENNESSEE MANGANESE Co. uses a similar jig on similar ore, treating the <5/8-in. fraction of concentrate from a log washer. Jig speed, 83 r.p.m.; other adjustments as in Table 23.

Table 23. Screens on McLanahan-Stone jigs on manganese ores

	Embree Iron Co.				East Tenn. Manganese Co.			
Cell no.	1	2	3	4	1	2	3	4
Feed size, in... Sieve	3/32~3/16 10-m. at rear; 18-m. at front	3/16~7/16 1/8-in. rd.	7/16~3/4 3/8-in. rd.	1/16~3/32 10-m. at rear; 18-m. at front	0~3/16 20-m.	3/16~5/16 3/32×1/2-in. slots	5/16~7/16 1/4-in. rd.	7/16~5/8 5/16-in. rd.
Stroke, in.					1 3/4	3	3 1/4	3 1/2

Bull jigs are of any type, but usually fixed-sieve, used for treating the coarsest feeds. Heavy ores up to 3-in. diameter have been treated. Bull jigs differ from others of the same type only in that they are built heavier to withstand the longer stroke and greater wear, and discharge ports must be larger to prevent clogging. In a Joplin bull jig with 36×60-in. sieve compartments, two eccentrics are used on each plunger.

Performance. At BUNKER HILL AND SULLIVAN (*61 A 225*) bull jigs formerly treated 1 1/4~1/2-in. material to make middling and tailing only. This method saved the heavy wear on soft galena concentrate that results if it is attempted to make a high-grade concentrate. The best grade that could

Table 24. Competitive test between Woodbury and Harz bull jigs at Boston and Montana mill of Anaconda Copper Co. (Feed 38~8-mm.)

Legend	Woodbury	Harz system		
		1-comp. jigs	2-comp. jigs	Total
Number of jigs	1 @ 1-comp.	2	2	4
Number of jig screens	1	2	4	6
Net screen dimensions, in.	57.5×39.5	41×21.5	36×23.5	.....
Screen aperture, square hole	0.31 in.	0.31 in.	0.25 in.	.....
Length of stroke, in.	3.5	2.25-2.5	1.75-2.12	.....
Strokes per minute	170	160	160	.....
Height of tailboard, in.	6 *a*	6.5	5	.....
Height of conc.-discharge gate (min.), in.	3.5	4	4.25	.....
Bottom of cup above screen, in.	2	2	1.75	.....
Size of plunger compartment, in.	24×60	20.5×42.75	17.5×37.5	.....
Size of plunger, in.	23.5×59.5	20×42.25	17×37	.....
Ratio screen area to plunger area	1.62	1.04	1.35	.....
Trommels used, 1.5-in. rd.-hole	2	2	.....	2
Trommels used, 0.87-in. rd.-hole	3	2	.....	2
Trommels used, 8-mm. rd.-hole	2	.....	2	2
Excess trommel area, Woodbury, sq. in.	8,144	.....	.....	.....
Feed rate, tons per 24 hr.	281	75	192	.....
Assays, % Cu: Feed	3.19	3.7	3.8	.....
Cup concentrate	12.19	11.6	11.7 & 13.3	.....
Hutch middling	4.86	7.5	9.4 & 6.1	.....
Tailing	1.62	2.1	2.9	.....
Water, gallons per ton of feed	1,135	728	.....	.....

a Slime overflow, 10 in.

be made on these jigs was 55% lead and that wore the concentrate into rounded marbles. But by taking a 25% rough concentrate, crushing it, and re-jigging, a 65% concentrate was made with but little wear on the galena. These jigs handled 150 tons per 24 hr. and rejected 90 tons of tailing containing less than 0.4% lead. At SLOCAN, B. C., bull jigs made a lead concentrate as coarse as 3/4-in. (*114 J 677.*) Table 24 gives data on a competitive test between a Woodbury bull or DE-WOODING JIG and the Harz bull-jig system at ANACONDA.

Neill jig (Fig. 11). Water currents are produced by a swinging vertical paddle, actuated by a rocker arm. Hutch concentrate only is made and is discharged continuously through three 3/8-in. spigots from each hutch. The jig was developed for service on gold dredges and was the forerunner of other simpler and more compact types now extensively utilized in that field. On the NATOMAS No. 7 dredge (*101 J 207*) the jig screens were 2 ft. 5 in. by 3 ft. 8 in., 8-m. Monel metal, bedded 1 in. deep with BB cast-steel shot. Each jig this size consumed 2.6 hp. at 172 r.p.m. Gold in the jig concentrate all passed 20-m. and 43% passed 100-m. Jig concentrate contained 6 to 7% of all the gold caught on the dredge. This was ground in a conical mill and treated in a shaking amalgamator and on plates.

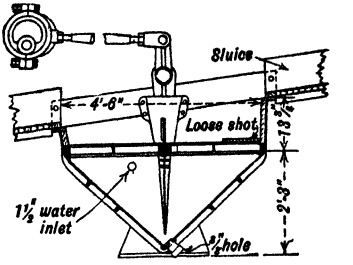

FIG. 11. Neill jig.

7. DIAPHRAGM JIGS

Bendelari jig (Fig. 12) pulsates water by means of the diaphragm *A*, having a flexible margin *B*, actuated vertically by the constrained piston rod *C*, which is driven, through a wrist-pin joint, from the simple eccentric *D*. The air well *E* eliminates glands and stuffing boxes. Corners of the plate *F*, supporting outer edge of the diaphragm, are cut away to make space for the fall of hutchwork. The upper edges of the webs of the grid *G* supporting the screen are champfered and cut away between the corners of each opening, so that the screen actually rests only at web intersections, which increases the effective screen area. Slotted steel sheet is the most usual screen material for the coarser feeds. Water enters through clack valve *H;* adjustment of the valve *J* regulates the relative pulsion and suction effects in the bed. When producing only hutchwork, screen is commonly bedded with steel shot. If coarse product also is desired, the jig may be equipped with screen discharge of dam-and-gate or other suitable type; Fig. 12 shows a perforated-pipe chatter *K*, similar to that on Cooley jigs in the Tri-State field.

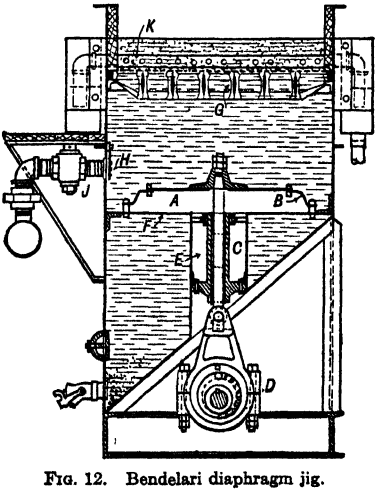

FIG. 12. Bendelari diaphragm jig.

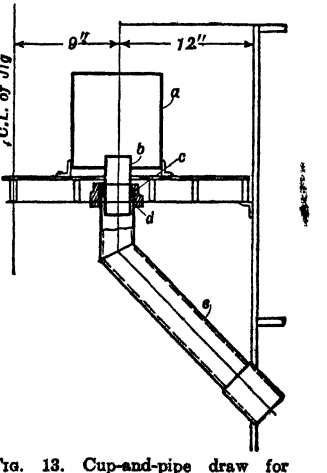

FIG. 13. Cup-and-pipe draw for Bendelari jig.

Cup-and-pipe draw. Fig. 13 shows a form of cup drawoff used on a 42×42-in. compartment. Two are placed symmetrically, one each side of the longitudinal centerline of the screen 12 in. from the tailboard. A 2 1/2-in. discharge pipe *e* on 45° slope, runs from each through the front wall of the jig. Cup *a* is a piece of 8-in. pipe supported on angle feet as shown, or better from a small truss running across the top of the compartment. The dam *b* is a piece of 2-in. pipe held in a rubber ring *c* set into 2 1/2-in. pipe cap *d*, thus being readily adjustable in height.

Table 25. Operating data for Bendelari jigs (*Q*)

Operator	St. Joe Lead Co., Sheep Ranch Mill	Argonaut Min. Co.	Summitville Cons. Mines	Kelowna Expl. Co.
Type of jig	Standard	Standard	Low Calif.	Low Calif.
Compartments	2 *e*	2	1 *e*	1 *c*
Size, in.	26×26	42×42	36×36	36×36
Purpose	Pyrite & free gold from grinding circuit	Pyrite & free gold from grinding circuit	Pyrite & coarse gold from grinding circuit	Pyrrhotite from grinding circuit
Screen: Material	18-gage steel	14-gage iron	Steel sheet	Steel sheet
Area, in.	22 1/2×22 1/2	38 1/4×38 1/4	36×36	35 1/2×35 1/2
Aperture, in.	1/16×1/2	3/32×9/16	1/16×1/2	1/16×1/2
Life, days	90	180	*b*	90
Bedding: Material	1/4-in. steel shot	No. 10 steel shot	.....	No. 13 steel shot
Depth, in.	3	1	6	2
Speed, r.p.m.	128	125	130	125
Stroke, in.	11/16	7/16–1	3/8	3/8
Power, hp	1.5	10	3	1.25
Feed: Material	Gold-quartz	Gold-quartz	Gold-quartz	Sulphide ore
Size	Table 25a	Ball-mill disch.	<1/4-in.	75% <325-m.
Rate, tons per 24 hr.	450	280–300 *a*	450 *d*	175
Water in feed, %	35	26	60	50
Hutch water, g.p.h.	1,020	7,180	.....	.....

a Original feed only. *c* Cross-flow. *e* End-flow.
b No failure in 11 mo. *d* 150 tons new; 300 tons recirculated.

Performance. Structural and operating data at a few mill installations are in Table 25. ARGONAUT MINING CO., Jackson, Calif., introduced a 2-cell jig between ball mill and classifier to scalp out pyrite and coarse gold from the grinding circuit preceding flotation; gold thus recovered has a higher net value per ounce than that contained in flotation concentrate shipped to a smelter. Hutch product of the jig is retreated on a quarter-size Wilfley table yielding gold (for amalgamation), sulphide concentrate, and tailing (returned to classifier). The jig is cleaned thoroughly, and again partially, at ends of alternate weeks; thorough cleaning requires a 5-hr. shutdown; incomplete, less than 1 hr. For a thorough cleaning, loaded screen is removed and replaced by one freshly bedded, and hutch is washed down. Contents of screen are sieved on 4-m., picking out nuggets and returning oversize ore to ball mill. Undersize is re-sieved on 8-m., and steel shot is removed by magnet. The <8-m. goes to amalgamating barrel together with gold recovered on the table. For a partial clean-up, only the head end of the jig is rebedded, without moving the screen. Shot consumption, 400 lb. per yr. Beds are rabbled once every hour. Hutch water is seldom adjusted except as required by changes in rate of feed; stroke is gradually lengthened from 7/16 to 1 in. as pyrite bedding accumulates; tightness of bed is avoided. Table 26 summarizes recoveries from Jan. 1, 1937, to Sept. 1, 1939. (A mine fire suspended operations for 5 mos. of 1938.) (*PC* from E. M. Smith and A. F. Ross.)

Table 25*a*. Screen analysis of feed to Bendelari jig, at Sheep Ranch

Mesh	Weight, %
>8	1.5
10	1.0
14	1.6
20	2.4
28	3.5
35	5.8
48	10.5
65	18.4
100	11.7
150	9.5
200	8.1
<200	26.0
	100.0

At SUMMITVILLE CONSOL. MINES a single-cell Bendelari jig (data in Table 25) is used for extracting pyrite and coarse gold from an all-cyanide grinding circuit. Desideratum is jig tailing that can be cyanided efficiently. In 10 mo. the jig produced 101 tons of concentrate, assaying 6.27 oz. Au, from 35,500 tons of feed containing 0.312 oz. Au per ton; jig concentrate thus amounted to 0.28% of mill feed, and contained 5.8% of its gold (*PC*).

KELOWNA EXPLORATION CO., at Hedley, B. C., has a single-cell jig (data in Table 25) in a pebble mill-classifier circuit primarily to remove pyrrhotite from a basic ore in which chalcopyrite carries most of the gold, and associated arsenopyrite must be crushed to 325-m. for satisfactory cyanide extraction; overcrushed pyrrhotite retards settling and filtering, and increases cyanide consumption. At MINERA POTOSÍ, Bolivia, in the pyrite section of the Chaupi mill, a 42×42-in., 3-compartment Bendelari jig operates in parallel with two 4-compartment Harz jigs; feed is identical with that to the coarse Harz jig in Tables 10, 11, Art. 3. The Bendelari treats 350 met. tons per day, against 300 tons by the two Harz jigs, with the same metallurgical efficiency. Screens are iron sheet, punched with 6-mm. square holes, and last 30 days; bedding is 3 in. of 1/2-in. pyrite. Speed,

Table 26. Recoveries on Bendelari jig at Argonaut mill

	1937	1938 7 mo.	1939 8 mo.
Values per ton:			
Ball-mill feed	$7.30	$9.01	$8.06
Bullion from jig and table	3.74	4.51	3.71
In table concentrate	1.13	1.76	2.01
Residue to flotation	2.43	2.74	2.34
Recovery:			
By jig and table	66.7	69.5	71.1
By flotation	27.6	26.4	24.3
Total	94.3	95.9	95.4

160 r.p.m.; strokes, 1 1/4-in. on the first, 1 1/8-in. on the second, 1-in. on the third compartment; motor, 7-hp. Bendelari has a more open bed; larger capacity, consumes less water and power; and requires less maintenance.

Low California-type Bendelari is specially adapted for dredges; it is built in units of 1 to 4 cross-flow cells. The standard 42-in. roughing cell treats 15 cyd. per hr. of gravel <1/4- or 3/8-in. Slotted 3/32-in. screen, and 5/32-in. shot are common, coarser sizes occasional. Concentrates from 6 to 8 roughing cells are usually delivered to a single-cell cleaning jig, normally having 1/16-in. slotted screen and 7/64-in. steel shot. Ratio of concentration on roughers varies widely, but is usually 20 to 25 : 1; ratio on the cleaner, 6 or 8 : 1.

Substitution of jigs for sluices, as now quite widely practiced, has almost invariably shown improved recovery, especially on dragline dredges where restricted deck room compels short sluices (*PC*). See also Sec. 2, Art. 21. Much of the earlier difficulty with jigs on gold dredges was due to blinding of screens by accretions of amalgam, the jigs then commonly being used as scavengers of sluice tailing; in recent practice, this objection has been met by installing jigs ahead of sluices, or by omitting mercury on any sluices preceding the jigs.

Performance on dredges. Jasper-Stacy Co. uses 2 double-cell roughers and a single-cell cleaner to supplement riffle sluices on a dragline dredge treating about 2,000 tons of trommel undersize in 20 hr. running time per day (data in Table 27); the jigs account for about 25% of total recovery. One man attends all 5 cells. Malay States Tin, Ltd., installed 14 roughers and 2 cleaners (all of 4 cells each)

Table 27. Bendelari jigs on dredges

	Jasper-Stacy Co.		Malay States Tin	
	Rougher	Cleaner	Rougher	Cleaner
Nominal size, in.	42×42	42×42	42×42	42×42
Screen: Area, in.	39 1/2×39 1/2	39 1/2×39 1/2	41×41 *a*	41×41 *a*
Aperture, in.	3/32	1/16	1/12×7/16	1/12×7/16 *b* 1/8×7/8
Life *e*	Abt. 4 mo.	Abt. 4 mo.		
Stroke: R.p.m.	142	160	104	165
Length, in.	1 1/8	3/8	1	3/4
Max. size feed, in.	3/8	3/32	3/8	1/12
Water in feed	Much		80–85%	
Depth of bed, in.	5 1/2 *c*		5	5
Water, g.p.m. per cell	50	50	100	100
Power, per cell, hp.	6.25	13 *d*	7	7

a Sloping 3/4 in. per ft.
b Coarser screen on cells 3 and 4.
c Of which 1 1/2 in. was steel shot.
d Installed power.
e Material steel.

on a 13 1/2-cu. ft. dredge treating 400,000 cyd. per month; mixture of sand and clay carried 0.1 to 1.3 lb. of cassiterite per cyd., with max. 0.25 lb. of pyrite and variable amounts of other minerals of 5 to 6 sp.gr. (data in Table 27). Feed varied with nature of ground from 8 to 20 cyd. per hr. per jig. Occasional overloading, in sandy ground, caused maximum delay of 30 min. per day; normal repairs were made weekly. A foreman and 5 men per shift attended to all jigs.

Pan-American Placer jig has been used principally as primary concentrator on gold dredges, treating the undersize of 3/8- to 1/2-in. dredge screen, and delivering hutchwork only, containing free gold mixed with a large proportion of other heavy minerals. For such work, the jig most often has two identical cells, 42×42-in., in tandem (end flow) or parallel (cross flow); smaller sizes, 12-, 26-, and 36-in., are used as cleaning jigs, though the pulsator jig (below) is usually preferred for this service. Each cell may be operated with its own pulsating mechanism (standard drive), or 2 cells may be operated, through walking beam, from the same eccentric (balanced drive); Fig. 14 illustrates the latter type. The square compartment *A* has an open conical bottom *B*, the lower edge of which is joined, by the circumferential rubber strip *C*, to the upper edge of

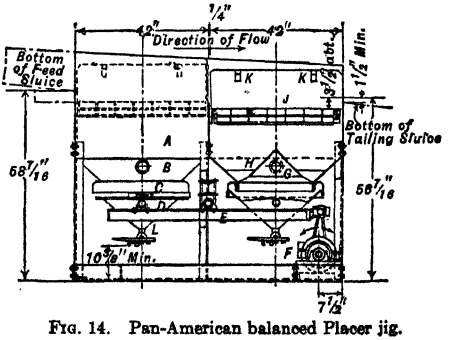

Fig. 14. Pan-American balanced Placer jig.

the conical hutch *D*. This entire lower portion of the cell is supported and vertically reciprocated by the balanced beam *E* (or by an individual vertical eccentric rod, in the standard type), actuated by the eccentric *F*. The beam may be oscillated from either end of the jig and the shaft rotated in either direction. Hutch water enters continuously at *G*, and is distributed by passing under conical baffle *H*. The screen, commonly of woven wire with 0.083×0.475-in. apertures, is assembled with its upper and lower grids in form of a basket *J*, which may be removed and replaced as a unit, lifting by hooks *K*. A 42×42-in. cell requires a minimum of 425 lb. of steel shot, commonly 3/16-in. Hutchwork discharges continuously through an adjustable, rubber-lined gate *L*; owing to the oscillation, a relatively small orifice can be used without clogging. (In the standard jig, the hutch discharges through a spout to one side.) At the most favorable dilution for primary feed, 4 to 6 : 1 by volume, a 42×42-in. cell should treat about 25 cyd. of gravel per hr. and consume 100 gal. of hutch water per min.; usual speed, 120 to 130 s.p.m., and stroke, 3/4 to 1 1/2 in.; running power for each cell of a balanced jig, about 0.5 hp., but a 2-cell jig is usually equipped with a 2-hp. motor. A standard jig of the same size requires a 2.5-hp. motor for each cell. The standard one-cell jig is built in 12-, 26-, 36-, and 42-in. sizes and has been used in grinding-classifier circuits in gold mills; in this service, it should not be required to treat more than 250 (dry) tons per day per sq. ft., including circulating load, requiring 3 to 6 gal. of water per min. per sq. ft. Usual speed, 150 to 180 @ 1/4 to 3/4-in. s.p.m.

Table 28. Pan-American Placer jigs in ball-mill-classifier circuits in gold mills

	Zeibright, Grass Valley, Calif.	Washington, French Gulch, Calif.
Sizes, in	{ 2 @ 26×26 } { 1 @ 36×36 }	1 @ 12×12
Feed: T.p.d. per sq. ft. *a*	206	150
% solids	70	70
% sulphides	3	4
Depth of shot bed (3/16-in.), in.	2.5	2.75
Stroke length, in.	3/8 & 1/4 *b*	1/4
Jig. water, g.p.m. per sq. ft.	3.2	8.0
Ratio of conc.:1	170	137
Per cent. insol. in conc	27	
Gold recovery, %	65	50–70
Pyrite recovery, %	14.4	23.0

a Including circulating load. *b* Longer stroke on smaller jig.

Performance. Table 28 gives data on two installations of the one-cell placer jig in gold-milling circuits, additional recoveries being made by other methods. On dragline dredge on JORDAN CREEK, Idaho (*139 \$7 J 50*), conventional sluices were replaced with Pan American jigs, Placer type for gravel and pulsating type for cleaning rough concentrate; also a small Placer jig for scavenging tailing from the cleaner, and a small pulsator for scavenging discharge from an amalgamator. The eight 42×42-in. cells of the primary jigs were in two blocks of four on opposite sides of the screen, and so arranged that each of the 4 cells next to the distributor passed its tailing to a second cell; the leading cells caught about 80% of the total concentrate. Each block was driven by 5-hp. geared motor, but required only 2 hp. while running. Excess power was for difficult starting in freezing weather. Speed, 120 @ 1 3/4-in. s.p.m. Capacity per cell, 30 cyd. per hr. of gravel, mostly <3/8-in. and all <1/2-in. round-hole. Gravel contained about 8 volumes of water; additional jig water was about 80 g.p.m. per cell. Hutch spigot, 7/16-in. Cleaning jig (Crangle pulsator, Art. 8) had two 12×12-in. cells, rated at 1/2 to 3/4 cyd. solids per hr. Bedding, 1/4 to 3/16-in. shot. Speed, 200 s.p.m.; water, 10 to 20 g.p.m. Concentrate passed through an amalgamator and thence to a single-cell, 12×12-in. pulsator jig. Tailing from the cleaner jig was scavenged on a placer jig with four 9×9-in. cells in series, bedded with 1/4- to 3/16-in. shot and coarse concentrate, largely garnets. Speed, 240 s.p.m.; water, 15 g.p.m. to each cell. Stroke averaged about 1 in.; shortest at the head end.

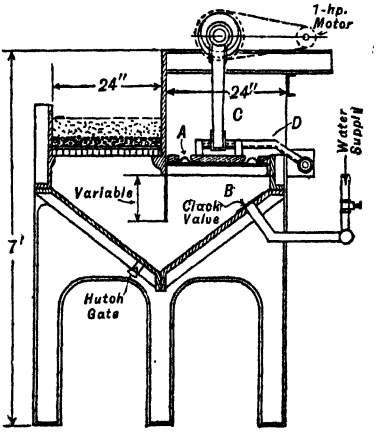

FIG. 15. New Jersey Zinc Co. jig.

New Jersey Zinc jig (Fig. 15) has been substituted for the New Century jig (Art. 6) at Franklin Furnace (Sec. 2, Fig. 106). Very short-range feeds of willemite, zincite, and calcite are concentrated. All jigs have 4 compartments, yielding products exclusively through the bedded screens, concentrates from the first three, middling from the fourth; the middlings return to head of the mill circuit. Jig walls and underpinning are in cast-iron segments. Compartments are 24×36-in., inside. Diaphragm

A comprises a central solid part and a flexible sheet surrounding it with the edges sealed at walls. The diaphragm is actuated through connecting rod *C* from a simple eccentric; a 1-hp. variable-speed motor drives 4 compartments. The vertically swinging arm *D* counteracts any tendency toward lateral motion. Screens are of woven brass wire, with apertures as in Table 29, about twice the size of the largest grains in the feed. They are supported on grids which rest on flanges cast in the wall and partition plates of the jig. Elevations of the screens are such as to maintain ore beds with the depths stated in Table 29, and with uniform drops of 1 in.

Table 29. Settings of New Jersey Zinc jigs

No. of jigs	Size of feed, in.	Screen aper., in.	Bedding, size, in.	Speed, r.p.m.		Stroke, in.				Depth of bed, in.				Water, g.p.m. per jig
				Min.	Max.	1	2	3	4	1	2	3	4	
Mill A														
4	0.095~0.080	0.196	0.432~0.328	134	198	1	1	1	1	6	6	7	7	180
6	0.080~0.065	0.126	0.328~0.228	136	209	1	1	1	1	5 1/2	5 1/2	6 1/2	6 1/2	174
6	0.065~0.042	0.126	0.328~0.228	159	227	3/4	3/4	3/4	5/8	5	5	5 3/4	5 3/4	168
8	0.042~0.032	0.076	0.228~0.108	181	231	5/8	5/8	5/8	5/8	4 1/2	4 1/2	5	5	163
8	0.032~0.023	0.076	0.228~0.108	199	255	1/2	1/2	1/2	3/8	4	4	4 1/2	4 1/2	157
Mill B														
2	0.091~0.082	0.196	0.432~0.328	135	204	5/8	5/8	5/8	5/8	6	6	7	7	165
2	0.082~0.071	0.126	0.328~0.228	129	213	1/2	1/2	1/2	1/2	5 1/2	5 1/2	6 1/2	6 1/2	155
2	0.071~0.055	0.096	0.328~0.228	148	291	1/2	1/2	1/2	1/2	5	5	5 3/4	5 3/4	150
2	0.055~0.038	0.084	0.228~0.108	169	329	3/8	3/8	3/8	3/8	4 1/2	4 1/2	5	5	140
2	0.038~0.032	0.076	0.228~0.108	197	371	3/8	3/8	3/8	3/8	4	4	4 1/2	4 1/2	135

Permanent bedding consists of clean franklinite (sp. gr., 5.1), crushed, sized between 0.1- and 0.5-in., and tumbled wet to round the sharp corners; it is then rescreened closely, and each jig is bedded with material averaging twice the diameter of the screen apertures, or about 4 1/2 times that of the ore (see Table 29). This avoids blinding screens. Bedding lost by attrition is replaced at intervals of about 3 weeks; entire bed is removed and resized twice a year. One operator attends to 5 jigs, adjusting only the speed and the hutch water as may be required by variations in richness of feed. This enters the jig through clack valve *B* from a vertical, tubular, hydraulic classifier which washes fine dry dust from the feed as received from the screens. At Mill A, feed averages 22% Zn; concentrate, 47%; tailing, 1.2%. At Mill B, feed is 17%; concentrate, 48%; tailing, 1.8%; middling (to tables), 10% Zn.

Denver Mineral jig (Fig. 16) is specially designed for closed grinding circuits, taking feed directly from the mill and recovering hutch concentrate only. It comprises the typical divided box with top-driven diaphragm *a* one side and screen the other. Eccentric drive is direct in single-compartment types and by walking beam *b* in 2-compartment machines. Hutch water enters through a rotating valve *c*, driven by sprocket chain from the eccentric shaft, and so set as to admit water only during the suction stroke. Entire screen assembly, consisting of a lower wedge-wire screen, a bedding of steel shot, and an upper and coarser ordinary screen for catching refuse, is removable. Simplex jig is made only in the 8×12-in. size. Duplex jig has 2 end-flow screen compartments, from 8×12- to 24×36-in. for 7 to 1,000 tons new feed per 24 hr. to grinding circuit. Stroke is adjustable up to 3/4-in.; usual speed, 300 s.p.m.

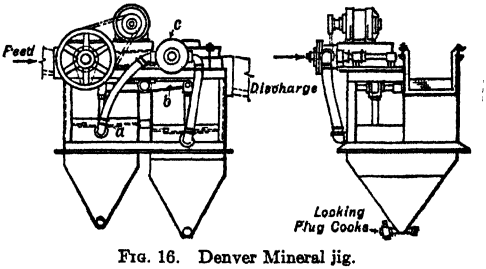

FIG. 16. Denver Mineral jig.

Performance. At PAYMASTER CONSOL., in 1939, two 16×24-in. duplex jigs in parallel treated daily about 540 tons of mill discharge averaging (with considerable fluctuation) 50% <200-m. and 0.27 oz. Au; density, 68% solids. Jig tailing carried 55% solids, showing addition of 0.35 ton of solution per (dry) ton of feed. The jigs delivered 12.8 tons of concentrate per day (ratio, 42.4 : 1) averaging 2.61 oz. Au. Hutch concentrate was drawn continuously through pinchcocks and delivered to a thickener; between leaving the jigs and discharging from the thickener, concentrate yielded gold to solution amounting to 27% of that in the primary mill feed. One of the jigs was equipped with a separate admission valve for each hutch, permitting individual control. Each jig was driven by 1.5-hp. motor, drawing 0.5 hp.; 320 @ 3/8-in. s.p.m. Screen had 2-mm. openings. Life of a bed, 6 weeks to 6 mo.,

averaging 3 1/2 mo. Bed was changed, by removing entire screen box and substituting another previously prepared, whenever it would no longer draw freely without discharging slime with the concentrate; changing took 2 men about 1 1/2 hr. Old bedding was washed free from slime and screened at 1/4-in.; oversize returned to mill; undersize, freed of small steel fragments by magnet, was used for a fresh bed. To form a bed, the cleaned screen was covered with 20 lb. of new 1/8-in. steel shot, and 45 lb. of screened bedding (or of clean pyrite, in case of a new jig); this made a bed about 1.5 in. deep, which increased to 3 in. after operating a short time.

Southwestern-Kraut Hydromotor jig has a square screen between lower and upper grids *a*, Fig. 17, latter being held in position by the side liners *b* and setscrews *c*. The square hutch *d*, flexibly connected to the bottom of the jig box by the rubber flange *e*, is supported and vertically oscillated by spider arms attached to the lower end of a central shaft *f*. Near its upper end, this shaft passes through a housing *g*, within which, and fixed to the shaft, is the pulsator motor, consisting essentially of a piston *h* and a rubber disk *i*. The motor may be driven by either air or water, at 8- to 10-lb. pressure; in the latter case, motor discharge water may enter the hutch through the pipe *j*, or flow to waste through the outlet *k*, under valve control. The screen is bedded with steel shot. Speed and character of stroke are varied by adjusting pressure on the spring *l*, which carries the whole weight of moving parts. Sizes range from 12×12- to 42×42-in.

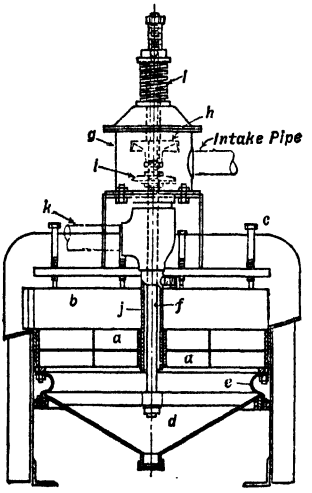

FIG. 17. Southwestern-Kraut Hydromotor jig.

Performance. At the NORTH STAR 500-ton mill, Grass Valley, Calif., a 42-in. jig treats the <3/8-in. discharge from 20 stamps, returning tailing to a closed grinding circuit for flotation (*PC*). Table 30 gives typical results during the first year's operation. At the 250-ton mill of CENTRAL EUREKA MINING CO., Sutter Creek, Calif., a 42-in. jig in closed circuit with ball mill and classifier, recovers about 75% of the total gold and returns tailing to the classifier. Rich hutch concentrate is amalgamated in a 5-stamp battery, the residue from which assays about the same as flotation concentrate and is shipped with it. At THREE R MINES, near Nogales, Ariz., three 36-in. Kraut jigs as roughers and one 24-in. as cleaner constitute the entire treatment of copper ore reduced to <3/16-in. by jaw crusher and rolls. These jigs are equipped for both screen and hutch discharge of concentrate.

Table 30. Performance of S.W.-Kraut jig in North Star mill

Mesh	Feed		Tailing		Concentrate	
	Wgt., %	Au, oz. per ton	Wgt., %	Au, oz. per ton	Wgt., %	Au, oz. per ton
>1/4-in..	6.4	0.21	6.4	0.187	.....	.....
10-m..	20.0	0.12	19.8	0.107	.....	.....
28....	22.5	0.16	22.8	0.093	12.0	2.210
35....	6.5	0.11	6.3	0.040	7.4	0.805
65....	10.5	0.203	10.5	0.067	26.5	2.144
100....	4.0	0.23	3.8	0.063	20.7	1.020
200....	7.0	0.30	7.2	0.127	30.0	0.951
325....	23.1	0.25	23.2	0.226	3.0	0.547
<325....	.....	.....	.....	.....	0.4	0.352
Total...	100.0	0.19	100.0	0.128	100.0	1.407

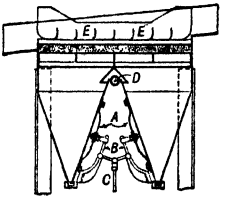

FIG. 18. Titan twin-diaphragm jig.

Titan twin-diaphragm jig (Fig. 18) uses a bedded screen and delivers hutchwork only. It has a double-hoppered hutch surmounted by a single screen. Diaphragms *A* are actuated simultaneously through the knuckle arms *B* and the pitman *C*, by an eccentric. The eccentric shaft has also a crank-and-rod connection with a valve controlling admission of water through the inlet *D*; valve is closed during the pulsion stroke; adjustment of the valve gear allows positive control of suction. Diaphragm stroke is adjustable between 1 and 2 1/2 in. Baffle plates *E* are assembled in a removable frame. Bedding (usually 3/16- to 1/4-in. steel shot) is held in place by a grid with rectangular openings corresponding with those in the supporting grid. Standard widths are 16 to 42 in.; lengths, 29 to 60 in. Capacity on average ore or gravel is claimed to be 40 to 50 tons per sq. ft. per day.

Ruoss jig (Fig. 19), introduced on MALAYAN tin dredges, has four consecutive hutches, each 4(wide) $\times$ 3 1/2-ft., covered over their entire area by steel sheet *F* punched, usually, with 1/2 $\times$ 1/8-in. slots, and resting on a cast-iron grid. The screen may be horizontal, but usually slopes 9 3/4 in. in total length of 14 ft. The partition *H* between the second and third hutches is completely stationary; the other two partitions are perforated with the largest possible (40-in. diam.) circular openings, which spaces are occupied by the diaphragms *D*, connected to the partitions by flexible, annular bands *J*. The diaphragms are hollow and water-tight, thus providing enough buoyancy to support their own weight and that of the connecting rod *C*; the latter of 2-in. I.D. steel tube in short sections with sleeve connections for convenience of installation, and welded to the diaphragms. Connecting rod and diaphragms are oscillated longitudinally by an eccentric and yoke mechanism *E*,

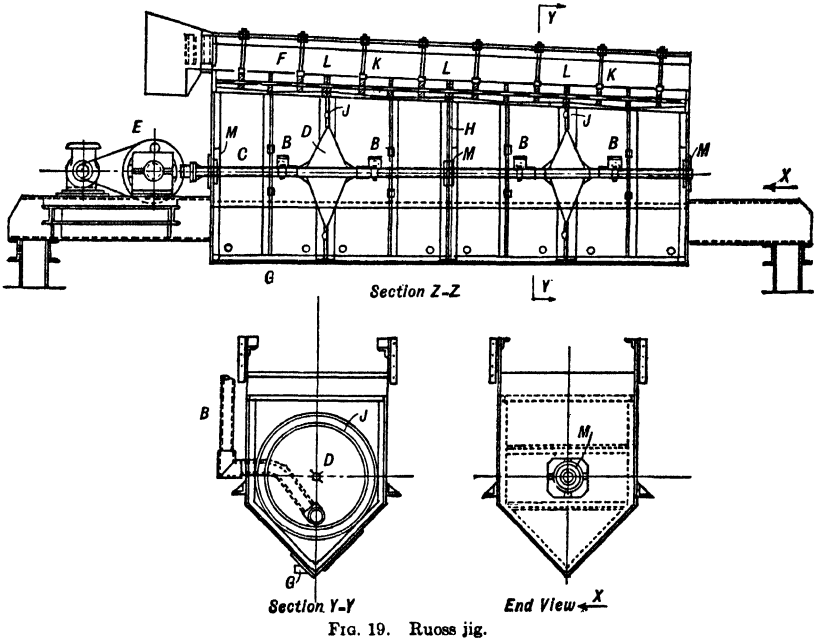

FIG. 19. Ruoss jig.

enclosed and submerged in oil. Stuffing boxes *M* at ends and middle of the jig are composed of annular rubber disks (4 at each end, 8 at the middle) separated by thin annular steel plates; compression applied by a ring of through bolts squeezes the rubber into tight sliding contact with the rod. Water enters each hutch through a 4-in. funnel-topped standpipe *B*, supplied from a longitudinal strainer and constant-level header box; usual head is 3 1/2 to 5 ft. above the jig screen. The hutch spigots *G* are so placed as to avoid banking of concentrates against the diaphragms.

Permanent bedding, of 1/2- to 3/4-in. hematite, is about 3 in. deep, and is kept in place by a welded-steel grid with 6 1/2-in. spaces; the grid is held immovable by the strut bolts *K*. Usual depth of sand, maintained by the dams *L*, is about 4 in. The standard 4 $\times$ 14-ft. jig weighs about 3 tons, and costs (made in MALAYA, 1939, and including royalty) about £220. Speed, 130 s.p.m. on roughers, 180 s.p.m. on cleaner jigs. Stroke, 1/4-in. usually, 3/4-in. maximum. Motor, 3/4-hp. Minimum water, 5 g.p.m. per sq. ft.; usual provision is 360 to 400 g.p.m. for a standard 4-hutch jig. Water-supply pump is usually specified for a total head of 40 ft. Capacity per sq. ft. of screen is about the same as that of a Harz jig, but total capacity is about twice that of a Harz of corresponding over-all size, which is important on a dredge. Average for several Ruoss installations is 0.5 cyd. per sq. ft. per hr. One dredge with six 6 $\times$ 16-ft. jigs has treated 200,000 cyd. per mo., with tailing loss of 0.015 lb. cassiterite per cyd.

8. PULSATOR JIGS

Richards pulsator jig (Fig. 20) was the forerunner of the present-day pulsators. It consisted essentially of a compartmented jigging tank, with a fixed screen, underneath which water was fed through a rotating valve. Concentrate discharged from the screen

through the usual gate and dam. When operated with closed hutch the bed was subjected to pulsion impulses only and kept remarkably loose. Speed for such jigging was about 200 s.p.m. Jigging with sized feeds was very rapid and the tonnage per sq. ft. of screen area many times that of a plunger jig. If suction was desired, the speed was lowered to 150 to 175 s.p.m. and the hutch gate opened. Owing to the fact that an 8- to 10-in. bed could be maintained and owing also to the relatively light suction, very clean concentrate was made. Power consumption was much less than for plunger jigs. Water consumption was high.

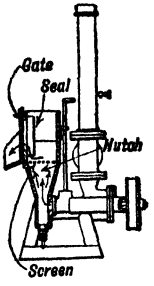

FIG. 20. Richards pulsator jig.

The jig did not respond readily to changes in tonnage and richness of feed, probably on account of the small size of the cells, yet it was limited to small cells to keep down water consumption. It was not satisfactory for hutch-making service, but was best suited to treatment of closely sized ores with large differences in specific gravity between mineral and gangue, and where low-grade tailing was not essential. In such service it delivered a high-grade concentrate with small power and not excessive water consumption. At ANACONDA a No. 2 jig treated material sized between 8 and 2.5 mm. in a short test at the rate of 224 tons per 24 hr. and made concentrate assaying 9.8% Cu and tailing about 2.2% from a feed containing 2.85%. This result compared unfavorably on a metallurgical basis with the work of the Hancock, Harz, and Woodbury jigs at these plants.

Pan-American pulsator jig has been chiefly employed for cleaning the rough concentrate from primary jigs on gold dredges (also as roughing jig in small-scale work), and in closed grinding circuits in gold mills, but for such use the amount of water added through the jig may prove undesirable. The jig requires no power, except to provide a 5- to 10-lb. head of water; this may be excessively dirty. Fig. 21 is a cross-section, showing a typical form of shot-bedded screen *A*, supported by a grid *B*, while a similar grid *C* holds the screen in place and provides pockets for retaining the bed of shot. In Fig. 22, *E* is the valve seat, and *D* a rubber diaphragm to which the seat is attached. Upward motion due to pressure of water entering at *A*, and rendered possible by the predominating area of the diaphragm, is resisted by spring *B*, which closes the valve when upward pressure is momentarily diminished by escape of water into the jig, through *F*. Rate of pulsation, 400 to 600 per min., is adjustable by varying the compression on the spring. Standard sizes

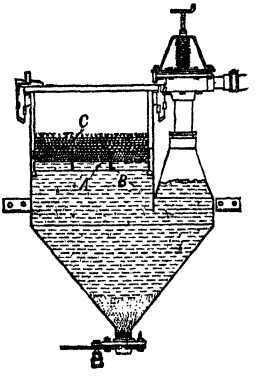

FIG. 21. Pan-American pulsator jig.

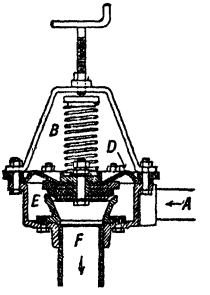

FIG. 22. Valve of Pan-American pulsator jig.

are 12×12-, 18×18-, and 24×24-in. A single cell usually suffices in a closed grinding circuit; for open circuits, or when used as a cleaner, two cells are advisable. Feed should not exceed $^1/_2$-in. size, and $<^1/_4$-in. is desirable, because the large amount of water required to maintain suitable activity in a coarser bed adversely affects the recovery of fine mineral in absence of suction. When used on a dredge for cleaning rough concentrate, 1 sq. ft. of screen is claimed to treat the hutchwork from four 42-in. roughers on average gravel; feed dilution, preferably not over 2 : 1 by weight, which usually involves some dewatering; jig water, 12 to 16 g.p.m. per sq. ft. As a roughing jig, capacity is 1.5 to 2.5 cyd. per hr. per sq. ft., at a dilution preferably not over 3 : 1 by weight; greater dilution is permissible, but reduces capacity. In closed mill circuits, capacity is 200 to 250 tons total per sq. ft. per day; preferred dilution, 55 to 70% solids; jig water, 10 to 14 g.p.m. per sq. ft.

Performance. Table 31 gives data on two small installations of pulsator jigs used as roughers, working on drift-mine placer gravel. Table 32 gives three examples of installation in closed grinding circuits in gold mills. At AUBURN, CALIF., the jig is between the ball mill and a Deister table in closed

Table 31. Pan-American pulsators as roughing jigs

	Angels Camp, Calif.	Plymouth, Calif.
Jig size, in	24×24	12×12
Feed: Tons per hr	12.3	5.0
Max. size, in	1/2	1/2
% solids	13.5	
Depth of shot bed, in	1 1/4	1
Water, g.p.m.	56	12
Values in feed, per ton	$0.853	$2–2.50
Ratio of concentration : 1	1,125	2,000
Gold recovery, %	91.7	96.8

circuit with a classifier. Previously, the table alone had been making a high-grade pyrite concentrate and a bulky middling, together accounting for recovery (*via* amalgamation) of 63% of the gold in the circuit. On introducing the jig, recovery as amalgam increased to 77% of the total, and the table no longer yielded a bulky middling. Tests on the adjustments of the jig gave the data in Table 33; shot bed (equal parts of 3/16- and 1/4-in.) was 5/8 in. deep; results of the last test indicated that the jig was

Table 32. Pan-American pulsators in grinding circuits

	Silver City, Nev.	Auburn, Calif.	Dayton, Nev.
Size, in	12×12	12×12	24×24
Feed: Tons per 24 hr. *a*	190	170	800–900
Limiting size, in	3/4 *b*	1/8	3/16
% solids	57.2	59.0	54.7
Water, g.p.m.	12	12	44
Ratio of conc. : 1 *c*	2,500	1,000	3,000
Concentrate assay, oz. Au per ton	261	340	54

a Incl. circulating load.
b Discharge from ball mill and from stamp mill with 3/4-in. screen.
c On basis of new feed.

then recovering 79% of the gold and 85% of the pyrite in the ore. In the DAYTON, NEV., mill, only 5% of the total gold is freed in the ball-mill circuit; screen assay of jig concentrate, comprising pyrite, ruby silver, and free gold, gave the data in Table 34. ANGLO AMERICAN MINING CORP., Randsburg, Calif., introduced an 18-in. pulsator jig in the ball-mill circuit to treat 400 to 500 tons of total load per day; to maintain classifier pulp at 18% solids required least possible use of jig water. Ore ranged from 1 to 5% sulphides and free gold averaged 33% of total values.

Purpose of the jig was to reduce total mill losses rather than make rich concentrate; by extracting coarse values (concentrate was nearly all >200-m.) mill recovery was increased by 0.01 to 0.02 oz. per ton, or more when the ore was high in talc. At MONTEZUMA APEX mine, Nashville, Calif. (*138 J 562*), a diminutive pulsator jig is used to recover free gold from the pyrite concentrate made by a unit-cell flotation machine, the latter treating <1/8-in. product in a closed grinding circuit, which also includes gold traps. Feed to the jig, about 1 ton per day, is about 90% pyrite, with a little gangue and some free gold not caught in the traps. The 12×12-in. jig has 1/16-in. punched screen, blocked off on all sides to leave an active area only 8 in. square. The 2-in. pulsator valve is 20 in. above jig bed and has a 10-ft. head; water connection to jig is 1/2-in. pipe. Bed of shot and 8~20-m. pyrite is 1 3/8 in. deep. Speed, 200 pulsations per min.; water, 3 to 4 g.p.m.

Table 33. Test of 12×12-in. Pan-American pulsator jig, Auburn, Calif. (See also Table 32)

Water, g.p.m.	Total depth of bed, in.	Tailing assay, oz. Au per ton
8	2	0.534
8	2.5	0.463
8	3	0.340
10	2	0.334
10	2.5	0.347
10	3	0.227
12	2	0.217
12	2.5	0.175
12	3	0.144

Assay of feed, 8 to 9 oz. Au per ton; tailing, 2 to 4 oz. Clean pyrite assays 3 oz. Au, hence the jig appears to collect practically all of the free gold in the feed. Ratio of concentration, 15 to 20 : 1. Jig concentrate (together with gold from traps) goes to amalgamating barrel; tailing returns to the main flotation mill. Screen assay of concentrate, for *free* gold only, is in Table 35.

Table 34. Screen assay of Pan-American pulsator-jig concentrate, Dayton, Nev. (See also Table 32)

Mesh	Wgt., %	Assay, oz. per ton		Distribution, %	
		Au	Ag	Au	Ag
>28	6.7	23.2	30.2	2.8	3.5
35	12.3	44.7	35.3	10.2	7.6
48	11.2	34.5	39.5	7.1	7.7
100	67.2	60.0	64.0	74.2	74.8
<100	2.6	118.3	141.8	5.7	6.4
Totals	100	54.3	57.5	100	100

Table 35. Free gold in Montezuma Apex jig concentrate

Mesh	Au, oz. per ton
	None
>48	1.07
65	2.71
100	19.78
150	37.95
200	67.60
325	287.32
<325	383.70

9. AIR-DRIVEN PULSATING JIGS

Baum jig (Fig. 23) is usually employed for coal washing. It has a fixed sieve *a* through which water is propelled by pressure of air (about 2 1/2 lb. per sq. in.) intermittently admitted through mechanically controlled valve *b* to a closed chamber *c* which is continuous with the chamber underlying the sieve compartment. Rate of change of air pressure in *c* is controllable through the setting of the valve mechanism, and almost instantaneous reversal in direction of flow with nearly constant acceleration to the end of stroke in both directions is said to be obtainable (*9 CE 204*). Screen discharge is from the front, actuated by the float mechanism *d;* light material overflows the end.

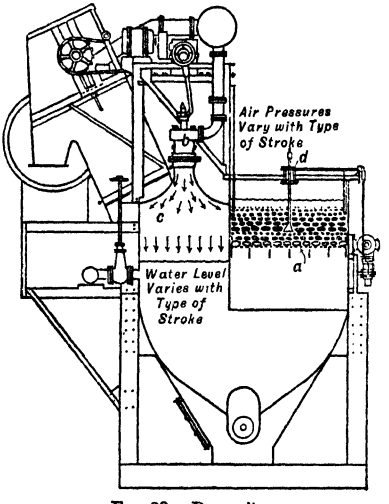

FIG. 23. Baum jig.

Conset (controlled-settling) **jig** causes rise and fall of water through a fixed screen by alternate inflation and deflation of rubber tubes (one for each hutch compartment) extending horizontally across the jig box close below the screen. Air at 2-lb. pressure, from a small compressor, is admitted and released through a header and mechanically operated valves, adjustment of which gives accurate control of pulsion and suction at speeds up to 350 pulsations per min. The screen is supported on a welded-steel grid, the outer edges of which rest on a rubber strip attached to the four walls of the jig box; when permanent bedding is desired, a similar grid is placed above the screen, covered, when necessary, by a coarse screen to exclude oversize material. There is no drop or partition between screens of consecutive compartments; ore may be made to travel in either direction by adjusting elevations of the two end boards. Concentrates are withdrawn in several ways, depending on their size and volume: (*a*) exclusively through the hutch, as when treating alluvial gravel or ball-mill discharge; (*b*) by skimming draws, discharging coarse concentrate into the hutch, from which it is extracted and dewatered by scraper elevator; (*c*) by a rotating star valve actuated by an adjustable-speed ratchet, receiving coarse concentrate through 2-in. slots crosswise of the screen and delivering it outside of jig box; (*d*) by ordinary gate-and-dam discharge, suitable for relatively small volumes of coarse concentrate but tending to interfere with stratification of thick beds. Water enters the hutch continuously through an inlet covered by a small baffle plate.

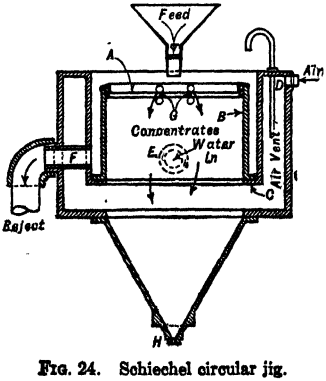

FIG. 24. Schiechel circular jig.

The Conset jig was developed and first used for Mesabi low-grade iron ores. In most usual form for that service it

has 4 compartments, each 42 or 60 in. wide by 24 or 30 in. in direction of flow. A form designed for placer work has two 42×36-in. compartments, with minimum height of 61 in. to top of upper grid; a single-cell, 24×18-in. jig is also available. On iron ore crushed to <5/8-in., the jig treats 24 long tons per day per sq. ft. of screen, concentrate ranging up to 70% of the weight of feed.

Schiechel circular jig (SCHICKEL POT), developed from a laboratory jig designed by Büttenbach, is used in S. W. Africa for collecting alluvial diamonds which resist adhesion to the usual greased table (Sec. 12, Art. 17). The screen *A* (Fig. 24) rests on the upper edge of the circular bronze drum *B*, the latter supported by flanges on the inner edge of the cast-iron well *C*. Annular space around this well is closed at the top, making a chamber connected, through *D*, with a source of fluctuating air pressure (not a continuous supply). Water enters continuously at *E*, overflows the rim of the screen, and carries tailings to the discharge spout *F*. Feed comes on at the center. In addition to its ordinary apertures, the screen has holes *G*, large enough to pass concentrate, each closed by 2 wooden balls connected by a short piece of stiff wire. On the up-stroke, the upper ball lifts off the screen and allows some concentrate to fall into the conical hutch. Concentrate is withdrawn periodically at *H* and transferred to a cleaning jig, similarly operated, but without the holes *G*. From this jig the screen is lifted out at intervals and its contents are turned upside down on a sorting table; the diamonds are always found within a few inches of the center. (*38 Part 2 SAME J 181.*)

MOVABLE-SIEVE JIGS

10. HANCOCK JIG

Description. The principal parts of the apparatus (Fig. 25) are a compartmented tank *a*, movable sieve *b*, and sieve-actuating mechanism. Feed is introduced onto the screen at *d*, and caused to progress lengthwise by a series of grasshopper-like jumps induced by the sieve-frame motion. Concentrate works down through the sieve into the head-end hutch compartments, middling is drawn down into the later compartments under the screen, coarse tailing falls into compartment *e*, fine sand collects in *f*, and slime and excess

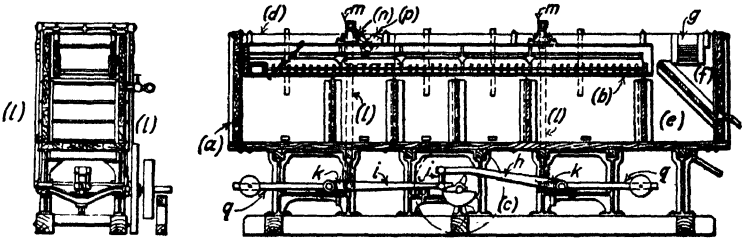

FIG. 25. Hancock jig.

water overflow at *g*. An extra, small compartment is often provided under a coarse screen between the last middling and the tailing compartments to catch any chance pieces of concentrate or middling too coarse to pass the screen or any piece of the ragging that may carry over. Two standard sizes of jig are made: the larger with a 6-compartment tank 25 ft. long, 4 ft. 2 in. wide, and 5 ft. 9 in. high; the smaller with a 5-compartment tank 18 ft. 6 in. × 4 ft. 5 in. × 5 ft. The sieve of the larger jig is about 20 ft. × 2 ft. 8 in. in the clear, when made of wood; when made of steel the screening surface is 20 ft. 4 in. × 3 ft. The actuating mechanism, usually placed below the tank but occasionally above to escape splash and grit, is driven by a cam shaft with a 3-armed cam *c*. The cam ears engage the end of lever *i*. Lever *i* actuates lever *h* through the link *j*, and the levers *i* and *h* actuate rocker arms *k* carrying 4 upright rods *l* connected in pairs at the top by cross bars *m* to which the sieve frame is attached. The head-end cross bar is linked at both ends to the jig tank by inclined radius links *n* adjustable as to their inclination with the horizontal by movement of the pivot pins in quadrants *p*. A considerable part of the weight of sieve frame and load is counterbalanced by the lever arms *q*. When lever *i* is raised by a cam ear, the sieve frame is raised by rods *l* and pulled forward by the radius links *n;* when the cam releases, the frame falls by gravity and at the same time is pushed backward by the radius links. The links work with an amount of lost motion controllable between 0 and 1/8 in. which produces a bump of greater or less intensity. The effect of the backward fall of the sieve frame and the bump combined is to cause forward travel of the material over the sieve frame, while the vertical motion produces the reciprocating water currents through the bed that cause stratification and separation of the minerals.

Construction. Complete jigs may be bought from various manufacturers, but usually only the iron work is purchased and the jig tank and supports and sieve frame are built on the ground. Wooden tanks are usual. They are built of 4-in. tongue-and-groove clear plank strongly stayed both vertically and horizontally at the compartment partitions. Partitions may be placed at any desired position, the best places being determined by experiment. They are usually so placed that the first concentrate and last middling compartment are considerably longer than the others. The sieve frame is made either of wood or steel. The wooden frame has four sides made of 2 1/2- or 3-in. × 18-in. plank, set on edge, and a grate *e* (Fig. 26) whose upper surface is about 6 in. above the bottom of the sides, for holding the screen. Top slats or battens *d* serve the double purpose of holding down the screen and of keeping the bed in place. One method of holding down the battens is shown in Fig. 26. Hardwood movable wedges *a* are driven between a fixed wedge *b* and a longitudinal bearing strip *c* placed against the side walls above the upper grid. The battens may be cambered about 1/8 in. at the center. Packing strips *f* on the outside of the sieve frame and in a corresponding position on the inside of the tank prevent excessive displacement of water on the down stroke with consequent loss of pulsion. Steel sieve frames are built up with light-weight plate girders for side bars and suitably cross-braced. A sectional grate of 1×3-in. oak cross slats, iron-shod, with 2×3-in. oak rails is bolted in position in the frame (*93 J 1178*). Steel is lighter than wood, hence consumes less power, and gives greater screen area, which increases capacity. Bearing boards and hard-pine wedges are used to hold down the upper slats and screen. Hutch discharges are of many types. Two forms are shown in Fig. 27. Gates should be capable of reasonably close regulation and of quick wide opening. Considerable water economy may be effected by discharging coarse tailing with chain drag or shovel wheel. The water level is maintained about 3 to 4 in. above the surface of the solids on the screen or about 12 in. above the screen itself. It is controlled by slats placed in guides in the overflow weir, provided that the water supply is more than sufficient to satisfy any hutch draws. To prevent fluctuation in water level at the Leadwood mill of the ST. JOSEPH LEAD CO. a float in the tailing compartment controlled a butterfly valve in the feed-water pipe. A solid foundation of concrete or masonry is usually provided but the DOE RUN LEAD CO. placed a 25-ft. jig on a steel trestle 18 ft. high with no serious resulting vibration. At Rosiclare, Ill., the box itself rests on concrete walls instead of the usual cast-iron legs.

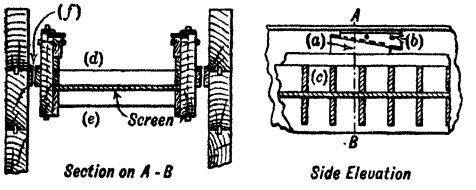

FIG. 26. Wooden sieve frame for Hancock jig.

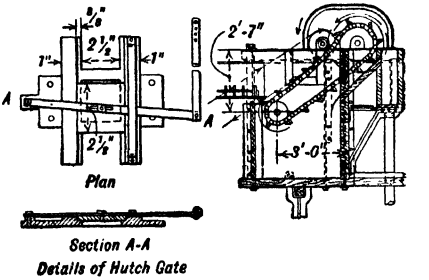

FIG. 27. Discharge draws for Hancock jigs.

Operation. The usual SPEED range is 180 to 195 s.p.m. corresponding to 60 to 65 revolutions of the drive shaft; a higher speed will increase tonnage but is very hard on the mechanism; at lower speeds the bed tends to pack. The length of the vertical STROKE together with the amount of hutch water provided determines strength of pulsion and suction. The usual length is 3/8 to 3/4 in. With a long stroke more hutch product is made and the operator varies this adjustment according to the tonnage and character of feed. Horizontal throw is usually about 3/4-in. It should be as long as possible in order to cause quick travel across the bed and thus maintain a thinner bed for a given tonnage.

All of the concentrate and middling from a typical Hancock jig is made through the screen. This necessitates the maintenance on the screen of a bed of grains of heavy material larger than the openings in the jig sieve. This may be coarser particles of the mineral that is being saved or artificial grains such as steel-plate punchings or iron or steel balls. The latter are used when the gangue is heavy. The bed is held in place by the grid on top of the screen and the maximum depth of bed is determined by the depth of the grid slats, usually 3 to 3 1/2 in. The transverse slats in the grid correspond with the supporting slats and are spaced 3 to 6 in. in the clear. Frequently longitudinal slats are also used in order to permit close control of the thickness of the bed at different points. At ANACONDA, brass castings forming pockets 5 × 10 × 3 in. deep were used instead of wooden top slats. They were wedged down in the usual fashion. Before the machine is started, each pocket is filled two-thirds to three-quarters full of ragging. If the bed is too loose, add more ragging and *vice versa*. The screen aperture determines the size of particles held back and this, in turn, determines the size of interstitial passages, thus controlling the work of the jig. (See Art. 2.)

SCREENS are rarely of the same aperture for the full length of the sieve. The underlying principle controlling choice of screen aperture is that the bed should gradually decrease in specific gravity and increase in size of interstitial passages from head to tail end. Openings are usually smallest over the first compartment in order to maintain a fairly tight bed and thus increase pulsion in comparison with suction and insure clean, fine-grained concentrate. The same opening may be maintained until near the end of the second compartment, when one to three rows of holes large enough to pass the largest particles of free mineral are introduced. These holes pass such particles while middling grains, both coarse and fine, are by this time stratified well above the large heavy grains of mineral and hence do not pass through with them. Smaller holes, although not usually so small as those over the first compart-

ment, are placed above the third compartment and fine rich middling is drawn down. Openings generally increase in size toward the end of the screen, with or without intervening rows of larger holes. At the end of the screen large holes are again provided to pass the coarsest middling particles. It is, in general, more difficult to make a clean separation of tailing from low-grade middling than to separate concentrate of suitable grade from high-grade middling, hence the latter operation is performed in as little space as possible and the remainder of the jig is given over to the former work. In a particular operation on SOUTHEASTERN-MISSOURI LEAD ORES the concentrate was substantially clean galena assaying 82.3% Pb with a specific gravity of 7.00 and the rich middling assayed 60.4% Pb with a specific gravity of 5.20; concentration criterion, water basis, 1.43. The low-grade middling assayed 4.91% Pb, the tailing sought carried 0.14%, the respective specific gravities were 2.95 and 2.82, concentration criterion, water basis, 1.07. There being only a small amount of free galena in the feed, the first two hutches, used for making concentrate, were allowed only 80 in. out of a total length of 240 in.

The last hutch is usually run with very heavy suction in order to take out all possible value in the middling.

The screens are punched plate or woven wire. At ANACONDA Ton-Cap screen was most satisfactory; it outwore ordinary woven wire cloth and was easier to keep clean.

Satisfactory operation depends on a constant feed rate and metal content. Increase in the amount of valuable mineral from any cause produces heavy beds with consequent travel of concentrate and middling toward the tail end; decrease causes loss of bed with consequent introduction of middling into the concentrate. The operator compensates for unavoidable fluctuation by shoveling off the bed when it becomes too heavy, shoveling on when the feed is light or plugging some of the screen holes or putting on finer screen. Fine gangue in concentrate may be due to leakage in the joints in the sieve tray. If the addition of ragging or increase in hutch water does not cure the condition, this possibility should be investigated. At one of the Gennamari mills, fine tailing adhering to concentrate was removed on wet screens, undersize going to tables.

Water consumption varies according to the size and character of feed, method of discharging tailing, tonnage treated, and character of product desired. With chain-drag tailing discharge it may run as low as 150 g.p.m. when treating 350 to 400 tons per day of low-grade lead ore and about 850 g.p.m. with gate discharge of tailing and strong suction in the middling compartments induced by running with open gates. In some cases, water has been conserved by removing middling, or even concentrate, as well as tailing, by scraper or other form of elevator.

Power consumption is from 4 to 6 hp. with normal load, stroke, and speed. A test at ANACONDA showed 5.2 hp. for motor, countershaft, and jig and 3.7 hp. for the jig alone.

Capacity depends on the character of work demanded but ranges from about 300 to 600 tons per day. This practically excludes the Hancock from mills working at less capacity than that at which the jig can be efficiently and continuously operated. It would be possible, however, at mills of 100 to 200 tons per day, which used one-shift crushing, to put a Hancock also on a one-shift basis, by employing suitable surge tanks.

Applicability. The Hancock jig is particularly applicable to the treatment of low-grade ores, recovering a small amount of high-grade concentrate and rejecting tailing. It does this, however, at the expense of retreatment, in circulation, of a large quantity of low-grade middling, much of which is true tailing. At many plants, also, it is necessary to retreat the tailing of primary Hancock jigs in order to recover low-grade middling that has been carried along in the crowd for high tonnage. The jig is not suited to close separation of light middling grains from gangue and hence cannot be used where mineral is finely disseminated. It has had its principal use in this country in treatment of the Mid-Continent lead ores (until 1927 in Southeast Missouri, when all jigging was replaced by tabling and flotation), but has been used to treat copper ores at Anaconda and in the Lake Superior district; also for Lake Superior iron ores. The best feed is deslimed but otherwise ungraded material ranging in size downward from about 3/8-in. Wiggin (*40 A 213*) determined that on ANACONDA ore the minimum economic size of free-mineral grain in the feed was 0.17-mm. On coarser grains the recovery was from 95 to 100%, but at this size recovery dropped to 50%. He found also, in treating deslimed <10-mm. material, that recoveries were improved by sizing the feed on a 4-mm. round-hole trommel and treating the sizes separately. Substitution of Hancock for Harz jigs in FEDERAL LEAD CO. No. 3 MILL caused simplification of the flowsheet by reduction in number of jigs and elimination of the screens and classifiers required for close grading of feed for Harz jigs; increase in capacity in the same mill space from 2,600 to 4,000 tons per day; and marked decrease in power and water consumption per ton milled. Experience at ANACONDA was similar, higher recoveries and saving in operating and repair labor were noted. DISADVANTAGES noted at DOE RUN No. 3 MILL (*95 J 1283*) were the low recovery of mineral finer than 1.5-mm., no way to remove coarse galena concentrate from the screen until it wore down or went into middling, and inability to maintain even depth of bed with variable feed rate. Difficulty in separating low-grade middling from tailing has already been mentioned.

Table 36. Hancock jig, Bonne Terre mill (*After Rabling*)

Material	Before changes		After changes	
	Tons per 24 hr. total	Assay, % Pb	Tons per 24 hr. total	Assay, % Pb
Feed, original...	400	.....	423	.....
Feed, total.....	750	4.1	505	4.7
Concentrate....	16.5	70.0	7.7	75.0
Middling.....	475	3.5	195	8.2
Tailing.....	258.5	0.9	302.3	0.7

Performance. BONNE TERRE MILL, ST. JOSEPH LEAD CO. A most exhaustive study of the work of the jig on the galena-dolomite ore of this company was reported by Rabling (*57 A 309*). The jig

was a standard 25-ft. size making concentrate from the first three hutches, middling from fourth and fifth, and tailing from the sixth. Speed, 190 to 195 s.p.m.; vertical stroke was varied by the operator between 3/8 and 3/4 in.; horizontal, 3/4 in.; depth of ragging, 3 in. The feed was the product between 9- and 2-mm. round-hole trommels. At the beginning of the testing work the results on 400 tons per day of original feed were as shown in Table 36. Sizing-sorting-assay tests of the feed and products are given in Tables 36*a* and 36*b*. Improvement in results was effected principally by change in the system of screens used, with resulting change in the character of the bedding. The final screen system is shown in Table 37 and final results in Table 36. In regular operations in this mill in 1919 the screens were as follows: sheet steel, 4-mm. aperture on compartment No. 1, 5-mm. on No. 2 with a row of 7-mm. holes at

Table 36*a*. Sizing-sorting-assay test on Hancock-jig feed, Bonne Terre mill (*After Rabling*)

Mesh	Weight, %	Assay, % Pb	Lead content, %	Per cent. of weight on each mesh			Per cent. of total weight		
				Free galena	Middling	Free gangue	Free galena	Middling	Free gangue
>3	3.1	3.14	2.40	.....	34.75	65.25	.....	1.078	2.022
4	11.9	3.41	10.00	0.16	28.00	71.84	0.019	3.330	8.551
6	17.6	3.66	15.91	0.26	25.86	73.88	0.046	4.550	13.004
8	26.0	3.85	24.69	0.78	22.57	76.65	0.203	5.870	19.927
10	24.7	4.73	28.84	1.02	20.69	78.29	0.252	5.110	19.338
14	12.4	4.62	14.13	1.32	18.81	79.87	0.164	2.335	9.901
< 14	4.3	3.80	4.03	1.80	12.20	86.00	0.077	0.525	3.698
Total	100.0	4.06	100.00	0.76	22.80	76.44	0.761	22.798	76.441

Mesh	Assay, % Pb			Per cent. of lead on each mesh			Per cent. of total lead content		
	Free galena	Middling	Free gangue	Free galena	Middling	Free gangue	Free galena	Middling	Free gangue
>3	.....	8.64	0.22	.....	95.38	4.62	.....	2.290	0.111
4	86.8	11.22	0.18	4.06	92.14	3.80	0.407	9.213	0.380
6	86.7	12.62	0.24	6.14	89.02	4.84	0.976	14.165	0.769
8	80.3	13.71	0.17	16.34	80.27	3.39	4.030	19.819	0.836
10	82.0	18.09	0.20	17.80	78.90	3.30	5.140	22.745	0.955
14	81.6	17.84	0.22	23.40	72.79	3.81	3.300	10.295	0.538
< 14	80.5	17.45	0.26	38.15	56.00	5.85	1.537	2.257	0.237
Total	80.9	14.36	0.20	15.39	80.78	3.83	15.390	80.784	3.826

the tailing end, 6-mm. on No. 3, 7-mm. on No. 4 with one row of 8-mm. holes at the end, 9-mm. on No. 5 with 2 rows of 10-mm. holes 3 rows back from the discharge end. Life of screen was about 6 weeks for 4-mm., 7 weeks for 5-mm., 8 weeks for 6-mm., 9 weeks for 7-mm., and 12 weeks for 9-mm. A 5-in. bed was carried. Power consumption, 5 hp. at 195 s.p.m.; 3/4-in. horizontal and 5/8-in. vertical throw. Capacity, 375 tons new ore per 24 hr. One man attended two machines. Lost time was less than 0.1%, principally due to broken rocker-arm shafts. Water consumption, 500 g.p.m. Changes in length of stroke, character of bed, and water quantity were left to the operator. Sizing test of feed as in Table 36*a*. Feed contained 12% moisture. Assays, % Pb: Feed, 2.5; tailing, 0.75; concentrate from first hutch, 75.0; second hutch, 65; third and fourth combined, 20; fifth, 2. At the RIVERMINES MILL of the same company a 5-compartment jig, 3 × 25 ft., was fitted with punched soft-steel plates, 3 × 4 ft., with 5-mm. apertures on the first and second compartments, 6-mm. on the third, 7-mm. on the fourth, and 8-mm. on the fifth. Life of screens was 30 days. Feed was all <9-mm. and 10% <10-m., and contained 40% moisture. 850 tons per day was treated, including circulating load. Water consumption, 300 g.p.m. 3-in. bed. 190 s.p.m. 5 hp. Three machines per man. Lost time, due principally to changing screens, 2%. Regulation of water and stroke were left to operator. Assays, % Pb: Feed, 3.0; tailing, 0.5; concentrate, 70; middling, 4. At FEDERAL LEAD CO. MILL No. 3, a 25-ft., 6-compartment jig with screen frame 32 in. wide was fitted with the following screens: First compartment, 3 ft. 9 in. long, 5-m. brass wire; second and third, 3 ft. 1 in. each, 4-m. brass wire; fourth, 3 ft. 6 in., 12-mm. punched-steel plate; fifth, 4 ft. 7 in., 9-mm. plate. Life of screens was 5 to 6 mo. Feed: on 12-mm., 1.4%; 10-mm., 3.1%; 8-mm., 9.2%; 6-mm., 16.2%; 4-mm., 17.9%; 2-mm., 29.3%; 2-mm., 22.9%, containing 43% moisture. Feed rate, 400 to 500 tons per day. 195 s.p.m., 3/4-in. vertical and 5/8-in. horizontal throw. 4-in. bed. Water, 190 g.p.m. 5 hp. Two machines per man. Stroke regulation left to operator. 3 to 4% lost time, due to cleaning and changing screens and general repairs. Assays, % Pb: Feed, 3; tailing, 0.65; concentrate, 70; middling, 3.5. At FEDERAL MINING & SMELTING CO., Morning mill, standard 25-ft. Hancock jigs were used on both coarse and fine feeds. (Jigging was replaced by flotation in 1926.) On the "coarse" jig the feed was all <12-mm., 66% >4-m., 26.6% >6-m. and 7.4% >16-m. with 53% moisture. Screens were 5-, 7-, 9-, 12-, and 14-mm. round-hole punched-steel plates on compartments 1 to 5 respectively. Life of screens, 75 days. 6-in. bed was carried. 180 s.p.m. length variable. 5 hp. One man attended 2 jigs and 4 sets of rolls.

Table 36*b*. Sizing-sorting-assay test on Hancock-jig products, Bonne Terre mill

Mesh	Weight, %	Assay, % Pb	Lead content, %	Per cent. of weight on each mesh		Per cent. of total weight		Assay, % Pb		Per cent. of lead on each mesh		Per cent. of total lead content	
				Free galena	Middling	Free galena	Middling	Free galena	Middling	Free galena	Middling	Free galena	Middling
First hutch													
> 3													
4													
6	15.2	80.3	15.29	63.0	37.0	9.58	5.62	82.1	76.9	64.50	35.50	9.87	5.42
8	30.5	78.6	30.08	67.2	32.8	20.50	10.00	82.7	70.4	70.65	29.35	21.25	8.83
10	28.6	79.7	28.60	77.2	22.8	22.10	6.50	81.7	71.3	79.62	20.38	22.78	5.82
14	14.8	81.2	15.09	88.3	11.7	13.07	1.73	83.1	66.7	90.42	9.58	13.65	1.44
< 14	10.9	79.8	10.94	87.8	12.2	9.57	1.33	82.0	65.1	90.00	10.00	9.85	1.09
Total	100.0	79.7	100.00	74.8	25.2	74.82	25.18	82.5	71.6	77.40	22.60	77.40	22.60
Second hutch													
> 3													
4	8.0	68.2	7.60	12.0	88.0	0.96	7.04	79.0	66.8	13.90	86.10	1.06	6.54
6	16.1	68.9	15.45	26.0	74.0	4.18	11.92	80.2	65.1	30.15	69.85	4.63	10.82
8	14.9	71.3	14.80	41.0	59.0	6.11	8.79	80.6	65.0	46.30	53.70	6.86	7.94
10	18.9	69.5	18.30	51.3	48.7	9.70	9.20	81.7	56.8	60.20	39.80	11.02	7.28
14	20.9	74.7	21.75	77.2	22.8	16.15	4.75	80.9	53.4	83.75	16.25	18.22	3.53
< 14	21.2	74.7	22.10	80.1	19.9	16.98	4.22	80.0	53.2	85.85	14.15	18.98	3.12
Total	100.0	71.8	100.00	54.1	45.9	54.08	45.92	80.7	61.3	60.77	39.23	60.77	39.23
Third hutch													
> 3													
4	5.4	59.9	5.54		100.0		5.40		59.9		100.00		5.54
6	10.0	58.4	9.98		100.0		10.00		58.4		100.00		9.98
8	14.9	59.8	15.25		100.0		14.90		59.8		100.00		15.25
10	23.4	59.2	23.68	2.3	97.7	0.54	22.86	80.1	58.7	3.12	96.88	0.74	22.94
14	23.7	63.3	25.65	29.8	70.2	7.06	16.64	79.3	56.5	37.30	62.70	9.57	16.08
< 14	22.6	51.4	19.90	32.0	68.0	7.22	15.38	79.8	38.2	49.60	50.40	9.88	10.02
Total	100.0	58.5	100.00	14.8	85.2	14.82	85.18	79.7	54.8	20.19	79.81	20.19	79.81
Total conc	100.0	74.4		64.4	35.6			82.3	60.4			71.1	28.9

Table 36*b*. Sizing-sorting-assay test on Hancock-jig products, Bonne Terre mill—*Continued*

Mesh	Weight, %	Assay, % Pb	Lead content, %	Per cent. of weight on each mesh		Per cent. of total weight		Assay, % Pb		Per cent. of lead on each mesh		Per cent. of total lead content	
				Middling	Free gangue	Middling	Free gangue	Middling	Free gangue	Middling	Free gangue	Middling	Free gangue
Fourth hutch													
> 3													
4	2.2	37.0	3.30	100.0		2.20		37.0		100.00		3.30	
6	5.1	29.1	6.01	100.0		5.10		29.1		100.00		6.01	
8	22.9	27.1	25.14	96.2	3.8	22.03	0.87	28.2	0.18	99.975	0.025	25.14	0.006
10	44.1	22.6	40.22	96.6	3.4	42.59	1.51	23.4	0.20	99.966	0.034	40.21	0.014
14	19.7	25.2	20.13	94.7	5.3	18.66	1.04	26.6	0.24	99.950	0.050	20.12	0.010
< 14	6.0	21.4	5.20	89.0	11.0	5.34	0.66	24.0	0.36	99.815	0.185	5.19	0.009
Total	100.0	24.7	100.00	95.9	4.1	95.92	4.08	25.7	0.23	99.961	0.039	99.96	0.039
Fifth hutch													
> 3	2.0	1.15	1.16	46.0	54.0	0.92	1.08	2.32	0.15	93.05	6.95	1.08	0.08
4	12.2	1.63	9.95	36.1	63.9	4.40	7.80	4.07	0.24	90.49	9.51	9.01	0.94
6	15.8	1.56	12.38	30.5	69.5	4.80	11.00	4.66	0.20	91.07	8.93	11.27	1.11
8	27.6	2.20	30.47	26.0	74.0	7.15	20.45	7.96	0.18	93.94	6.06	28.62	1.85
10	24.4	2.36	28.90	27.4	72.6	6.67	17.73	7.97	0.25	92.37	7.63	26.68	2.22
14	13.1	2.04	13.42	22.7	77.3	2.96	10.14	8.25	0.22	91.66	8.34	12.30	1.12
< 14	4.9	1.67	3.72	18.4	81.6	0.90	4.00	7.42	0.18	90.28	9.72	3.35	0.37
Total	100.0	2.00	100.00	27.8	72.2	27.80	72.20	6.60	0.21	92.31	7.69	92.31	7.69
Tailing													
> 3	4.6	1.04	7.26	32.8	67.2	1.510	3.090	2.92	0.13	91.67	8.33	6.665	0.605
4	18.6	0.67	18.90	19.3	80.7	3.585	15.015	3.07	0.10	88.00	12.00	16.630	2.270
6	21.4	0.60	20.70	14.8	85.2	3.165	18.235	3.84	0.08	89.20	10.80	18.490	2.210
8	24.4	0.63	23.23	10.9	89.1	2.660	21.740	5.12	0.08	88.67	11.33	20.625	2.605
10	17.4	0.63	16.74	8.8	91.2	1.530	15.870	6.60	0.06	91.40	8.60	15.300	1.440
14	9.3	0.69	9.70	6.6	93.4	0.615	8.685	6.24	0.30	59.30	40.70	5.750	3.950
< 14	4.3	0.53	3.47	7.8	92.2	0.335	3.965	4.60	0.20	65.50	34.50	2.280	1.190
Total	100.0	0.66	100.00	13.4	86.6	13.400	86.600	4.22	0.11	85.73	14.27	85.730	14.270

Lost time, 0.05%, due principally to changing screens. Length of stroke, quantity of water, and character of bedding were regulated by operator. "Fine" feed was all <4-m.; 9.6% >6-m.; 63% >16-m., and 27.4% <16-m.; 45% moisture. Screens, punched-steel plate, 3-, 3-, 3-, 5-, and 7-mm. round holes on compartments 1 to 5 respectively; life about 75 days. 180 s.p.m. 5 hp. Attendance and lost time as above. Results for both jigs, averaged over 8 days, are stated in Table 38. ANACONDA ran extensive tests before replacing Harz-type jigs by Hancock jigs. The work was done on a 25-ft. jig with tray 20 ft. × 2 ft. 8 in. Speed, 190 to 195 s.p.m., vertical stroke 3/8 to 3/4 in.; horizontal stroke, variable. No tailing was made. Concentrate was drawn from the first three hutches, middling from the fourth hutch was circulated, middling from the fifth and sixth hutches was reground. Results are given in Table 39. Further data from ANACONDA presenting the results of competitive tests between Hancock, Harz, and Woodbury jigs are given in Table 40.

Table 37. System of screens used on Hancock jig at Bonne Terre mill

4-mm. round hole to rib...	3	3 ribs
5-mm. round hole to rib...	15	12 ribs
7-mm. round hole to rib...	16	1 rib
6-mm. round hole to rib...	22	6 ribs
7-mm. round hole to rib...	30	8 ribs
8-mm. round hole to rib...	31	1 rib
6-mm. round hole to rib...	41	10 ribs
9-mm. round hole to rib...	43	2 ribs
5-mm. round hole to end..	.....	3 ribs

All of these mills have abandoned jigging for flotation (Sec. 2, Figs. 21, 100), but the data illustrate efficient operation, and methods applicable to other ores not so peculiarly amenable to flotation as lead and copper.

Table 38. Performance of Hancock jigs, Morning mill, April, 1917

	Coarse jig			Fine jig		
	Tons per 24 hr.	Assays, per cent. *a*		Tons per 24 hr.	Assays, per cent. *a*	
		Pb	Zn		Pb	Zn
Feed.....	289	5.1	4.2	354	6.5	4.6
Hutch No. 1..	15 *b*	67.3	3.5	7 *b*	71.5	2.8
Hutch No. 2..		62.4	4.3		70.1	3.2
Hutch No. 3..	219	35.4	8.4	285	57.7	5.6
Hutch No. 4..		11.6	7.5		31.9	9.7
Hutch No. 5..		3.5	2.7		4.9	4.9
Tailings.....	55	1.1	1.0	62	1.4	1.6

a Arithmetical averages over 8 days without excessive fluctuation.
b By difference.

Table 39. Hancock vs. Harz-type jigs, Anaconda Copper Co. (*46 A 217*)

	Natural feed, <8-mm. round-hole		Sized feed, 8~2.5 mm.	Classified feed, 11~0.25 mm. quartz	Harz jig system *c*
	Low tons	High tons			
Tons of feed per 24 hr.:					
Average.....	420	865	545	480	430
Maximum.....	450	980	.....	.....	480
Minimum.....	400	750	.....	.....	420
Feed, % Cu.....	3.31	3.43	2.71	2.95	3.38
Concentrate, % Cu.....	9.00	9.15	13.90	9.58	10.5
Concentrate, % insol. (SiO_2+Al_2O_3).....	30.7	25.8	18.7	23.8	12.3
Middling, % Cu.....	1.56	2.04	1.46	1.10	1.70
Recovery, %.....	59.2	49.6 *a*	51.6 *d*	58.7	48.7
Machines displaced by Hancock jig *c*:					
Evans jig compartments.....	32 *c*	64	64	72	.....
Evans classifiers.....	2	4	0	3	.....
Trommels, 3×6-ft.....	4	8	4	4	.....
Screen area, Hancock, sq. in.....	6,690	6,690	6,690	5,500	.....
Screen area, Evans retired, sq. in.....	36,500	73,000	48,670	54,720	.....
Water consumed, gal. per ton.....	1,530 *b*	.....	350	515	3,500

a Feed rate too great for efficient treatment.
b High, on account of back water necessary to keep fine sand and slime out of concentrate.
c 8 @ 2-compartment Harz-type jigs treating 8~5-mm. feed, same on 5~2.5-mm. feed; 2 @ 4-spigot classifiers on <2.5-mm. material; 8 @ 2-compartment Harz-type jigs on classifier spigot products; 2 @ 5-mm. and 2 @ 2.5-mm. trommels.
d Lower than "Natural, Low tons" on account of lower grade of feed.

Table 40. Comparison of Hancock, Harz, and Woodbury jig systems at Anaconda. Feed all <8-mm.

System	Number of tons averaged	Number of machines				Screen area, sq. ft.	
		Jigs	Trommels			Jigs	Trommels
			8-mm.	5-mm.	2.5-mm.		
Harz	9	24	2	2	2	254	339
	11	12	1	1	1	127	170
	10	12	1	1	1	127	170
Hancock	6	1	2	0	0	46	113
	3	1	2	0	0	46	113
	9	1	2	0	0	46	113
	9	1	4	0	0	46	226
Woodbury	11	5	1	0	0	35	56
	10	5	1	0	0	35	56

System	Number of tons averaged	Tons of feed			Water, gallons	
		Per 24 hr.	Per sq. ft. of jig screen per 24 hr.	Per sq. ft. of floor space per 24 hr.	Per ton of ore	Per sq. ft. of jig screen per 24 hr.
Harz	9	446	1.76	0.61	3,457	6,064
	11	190	1.50	0.52	.....	.....
	10	228	1.80	0.63	.....	.....
Hancock	6	411	8.94	3.70	884	7,899
	3	414	9.00	3.73	979	8,818
	9	408	8.87	3.68	919	8,145
	9	756	16.43	6.81	569	9,339
Woodbury	11	221	6.31	2.19	1,502	9,582
	10	223	6.37	2.20	1,348	8,599

System	Number of tons averaged	Assay, % Cu				
		Feed	Concentrate	Middling	Slime	Tailing
Harz	9	3.27	10.50	1.70	3.49	0.97
	11	3.29	*a*	*a*	3.29	0.69
	10	2.89	*a*	*a*	3.18	0.79
Hancock	6	3.25	10.30	1.72	3.24	*b*
	3	3.40	8.10	1.62	3.55	*b*
	9	3.34	10.60	1.84	3.39	*b*
	9	3.58	9.15	2.49	3.63	*b*
Woodbury	11	3.01	9.69	1.65	3.53	0.76
	10	3.07	9.90	1.89	3.40	0.84

a No assays. *b* None made.

A fluorspar mill at ROSICLARE, Ill., uses four 25-ft. Hancock jigs to make a rough CaF_2 concentrate and tailing; jigs are standard construction, but rest on concrete walls instead of usual CI legs. Tailing is elevated by a built-in drag scraper 24 in. wide (*135 J 301*). Screen, 32 1/2 (wide) × 225-in., is in 4 sections, divided as shown in Table 41, starting at the feed end. The screen has two gates like Fig. 13, about 1 ft. apart and 7 ft. from tail end, for discharging coarse concentrate into the hutch. A small amount of galena is removed from the screen by hand. Power installed for 4 jigs, 20 hp. Water for 4 jigs, 300 g.p.m. Feed is <1/2-in., deslimed. Capacity, 9 tons per jig per hr. when necessary to remove galena; otherwise, as when reworking old tailings, 12 tons per hr. Table 42 gives average assays. Concentrate is subsequently crushed to pass 1/4-in. Leahy screen, then subdivided at 1/8-in. for cleaning jigs and Plat-O tables, yielding combined concentrate averaging 85.8% CaF_2, 2.3% SiO_2, and 10.6% $CaCO_3$. At EMPIRE ZINC CO., a 12.25-ft. 3-hutch jig recovers galena concentrate from the first, middling from the second (returned, usually *via* a small rod mill, to the head), and tailing from the third hutch; the tailing is further reduced to table and flotation size (*132 J 251*). Ore is largely pyrite, with galena and blende (var. marmatite) in gangue of Ca, Mg, and Fe carbonates, characteristically porous. Feed to jig is <4-m. product of a ball mill, deslimed and dewatered to 55% solids. Screen, 3 ft. 2 in. wide, has 0.194-in. openings; bedding is 00 lead shot over the first, and 5/16-in. steel balls over the second hutch; speed, 189 s.p.m. Galena concentrate is drawn periodically through

the hutch spigot. Middling and tailing are continuously removed and dewatered by vertical screw conveyors having 9-in. flights inside of 10-in. pipes, both cast in a manganese-iron alloy; short, horizontal conveyors in the bottoms of both hutches propel the solids to the boots of the elevators.

Various expedients were used to meet special problems at GENNAMARI MINES, Sardinia (*18 pt. 1 RIM, 367*). At the PIREDDU mill, roughing 400 tons of blende ore per day, at 10~2-mm., it was impossible to supply the 220 to 260 g.p.m. of water required when operating with all hutch discharges open; hence the first 5 hutches were arranged to discharge intermittently, and a small scraper elevator lifted tailing from the sixth, thus reducing consumption to 65 g.p.m. When feed size was reduced to 10~1.5-mm., tailing carried considerably more fine blende. At ARGENTIERA mill, treating <10-mm. tailing, an impinging jet was installed at the top of the tailing elevator to wash fines back into the hutch, from which they were drawn intermittently for other treatment. At the NARACAULI mill, the Hancock produced a concentrate as well as middling and tailing from <10-mm. feed; the concentrate, to which much fine tailing adhered, was screened at 2-mm., the undersize going to a table. At some of the Spanish mills of the SOC. DE PENARROYA (*loc. cit.*), water for Hancock jigs was economized by removing both middling and tailing by scraper elevators. The middling elevator was constructed at right angles to one side, as an integral part of the jig tank; partitions between the 3 hutches contributing middling were removed, and replaced by sloping chutes delivering to the elevator.

Table 41. Screens on Hancock jigs, Rosiclare, Ill., fluorspar mill

Length, in.	Mesh	Wire diam., in.	Aperture, in.
37.5	3	0.120	0.213
37.5	2 1/2	0.135	0.265
132	2	0.135	0.365
18	5/8 in. c-c.	0.244	0.500

Table 42. Assays for Hancock jigs treating fluorspar

	CaF_2, %	SiO_2, %	$CaCO_3$, %
Crude	40.82	4.19	52.93
Concentrate	63.86	2.78	33.68
Tailing	9.74	4.15	85.24

11. OTHER MOVABLE-SIEVE JIGS FOR ORES

A modified Hancock jig was developed at the HALKYN DISTRICT UNITED MINES, Ltd., Wales (*46 IMM 376, 418, 441*), to treat a coarsely disseminated lead-zinc-limestone ore. Vertical motion of the screen box is accelerated on the down-stroke by a link connection between cranks on two parallel but eccentric shafts; both vertical and horizontal motions are adjustable. The screen box, 32 in. × 14 ft., set level, spans 5 hutch compartments as follows: No. 1 (to remove fines and start stratification) 20 in. of blank feed plate at 30° slope and 32 in. of 5-mm. screen; No. 2, 32 in. of 15-mm. and 3 in. of 20-mm. screen; No. 3, 8 in. of 20-mm. and 6 in. of 25-mm. screen (Nos. 2 and 3 deliver rough concentrate); No. 4, 27 in. of 15-mm. screen; No. 5, 30 in. of 20-mm. and 10 in. of 25-mm. screen. (Nos. 4 and 5 deliver middling; the 25-mm. end trap intercepts occasional coarse galena, which passes the trap in No. 3.) Tailing discharges into the submerged boot of a chain-bucket dewatering elevator delivering to cars.

Performance. Mill feed varies, often abruptly, from 10 to 30% Pb and 2 to 8% Zn. Feed to the jig was sized between 1-in. and 6-mm. on wet screens. The jig roughed out limestone tailing, amounting to 25% of total mill feed, averaging 0.5% Pb; both concentrate (76% Pb) and middling were retreated. Hutch No. 1 was drawn every 20 min.; Nos. 2 and 3, every 40 min.; Nos. 4 and 5 discharged continuously to an elevator. Capacity, 300 tons per day; one operator attended it and 2 Harz jigs.

In a later modification, the screen box was divided by 2 weirs into 3 independent sections, each with its screen sloping toward the discharge end, the box as a whole remaining horizontal. In all sections, most of the area was covered by screen of a mesh to retain all ore (except some fine concentrate on the first), but a strip of coarser screen across the lower end of each section provided for discharge of concentrate into 3 separate hutches; a fourth hutch collected fine concentrate from the first section. The jig thus operated without bedding. Capacity, about 1 ton per sq. ft. per hr. Power for treating 20 tons per hr, 6.5 hp., or 0.33 hp. per sq. ft. of screen area.

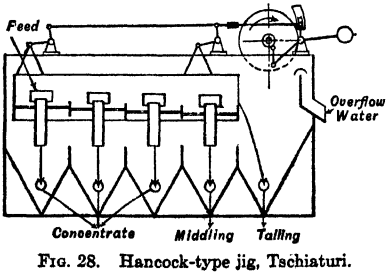

FIG. 28. Hancock-type jig, Tschiaturi.

At TSCHIATURI (*34 ME 619*) a Hancock-type jig treats manganese ores 8~0-mm. The sieve (Fig. 28) has a substantially vertical motion, imparted by mechanism situated above the jig. The screen is sectionalized, with a drop from one section to the next to produce longitudinal flow. Each section has a cup discharge for coarse concentrate.

Performance. Each of three such jigs treated 10.8 tons per hr. of <8-mm. material (see Table 43).

Table 43. Performance of Hancock-type jigs, Tschiaturi

	Tons per hr.		Per cent. of mill feed	Assay, % Mn	Distrib. of Mn in mill feed, %
	Solids	Water			
Feed.....	32.5	180	59.0	*b*	*b*
Concentrate.	16.5	57.0	34.9	53.08	47.75
Middling....	11.5	40.0	17.4 *a*	*b*	*b*
Tailing.....	4.4	17.5	6.7	13.81	2.39
Overflow....	.....	66.0	.....	.....	.....

a By diff. *b* Not reported.

Humboldt jig (*77 ZvDI 149*) has a movable screen frame resembling the Hancock, but the screen (Fig. 29) is in two equal segments, the front edge of the second segment being held at an adjustable distance above the rear end of the first, and overlapping it slightly. This leaves a clear space across the full width of the screen through which the coarse concentrate collecting on the first segment can fall into a narrow hutch *a* between the first and second fine hutches, while middling and tailing pass over to the second segment. In the same manner, tailing is skimmed at the end of the second segment, and coarse middling falls through an adjustable space, into a second narrow hutch *b*. Tailing discharges into a fifth and last hutch *c*. The Eisenzecher Zug treats spathic iron ore on a rougher at 50~30-mm. size (screen 8 1/4 ft. long, 2 1/2 ft. wide) and 4 finishing jigs at 30~18, 18~12, 12~6, and 6~3 mm.

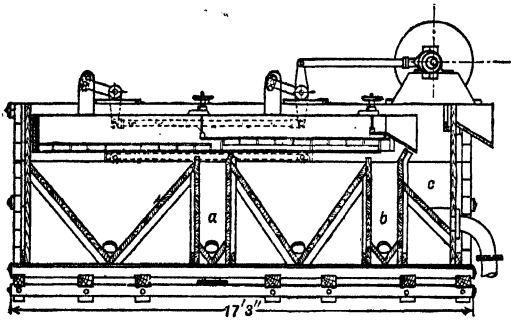

Fig. 29. Humboldt jig.

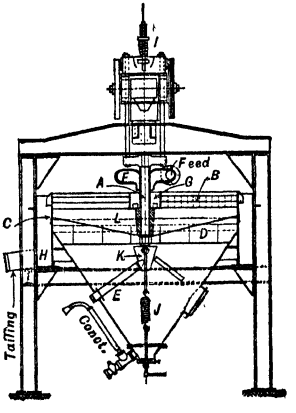

Fig. 30. Hardy-Smith circular buddle jig.

Hardy-Smith buddle jig (*105 Aa 1*) has a horizontal, circular screen (Fig. 30), with vertical motion imparted by a pitman-and-toggle mechanism, thus affording two fundamental advantages: (*a*) rate of ore travel horizontally is slowest where separations are most difficult; (*b*) sharply accelerated downstroke, quick turn, and decelerating up-stroke provide optimum conditions for unsized ore.

The screen, 6- or 8-ft. diam., rests upon 6 or 8 arms *L* radiating from a point near the lower end of the vertical shaft *A* and is held in place above and below by identical cast-iron grids *B*, with square 4- or 5-in. openings and webs 2 1/2 to 3 1/2 in. deep. Both screen and grids are segmented to fit between the radiating arms. Periphery of screen is bounded by a dam, adjustable in height, and is flexibly connected to the perimeter of the conical hutch by a rubber strip *C*. Across the top of the hutch, and just below the lowest position of the radiating arms, is a coarse grid *D* with deep flanges to prevent water waves. Water is admitted to the hutch from a tank at the same elevation as the screen, equipped with a float valve to maintain constant head. Usually only a hutch product is desired, discharged through the gooseneck; if wanted, screen product may be drawn through cylindrical cup gates discharging through hopper *K* and pipe *E*. Feed enters through chamber *F* (with a swirling motion to cause uniform distribution) and the annular overflow box *G*. Tailing flows over the dam into a launder discharging at *H*. Entire weight of moving parts is carried by the spring *I*; tension in the opposing spring *J* is adjusted until the natural frequency of the system synchronizes with that of the head motion; no vertical guides are required. Length of stroke may be varied, while running, by adjusting the position of the pitman block. Usual speed is 250 to 300 s.p.m.; power for an 8-ft. screen, 3 to 4 hp., depending on speed. Usual bedding is chilled-iron shot. Feed (best not >1/2-in.) may have any dilution. The jig is recommended in tube-mill and classifier circuits. An 8-ft. jig, thus used, is reported to have

continuously treated 32 tons of solids per day per sq. ft. of screen; a 6-ft. jig, on 40-m. deslimed sands, 15 tons. North reduction works of WEST RAND CONSOL. MINES has 18 @ 6-ft. roughing jigs, each in circuit with a tube mill discharging 750 to 1,500 tons of solids per 24 hr.; also 2 @ 8-ft. jigs for recleaning concentrate from the roughers. A 6-ft. jig, treating 850 tons per day, requires 740 tons of hutch water (cyanide sol., in this case), of which 610 tons passes off with tailing and 130 tons with 34 tons of concentrate per day containing 14.7% FeS_2. Total concentrate (614 tons) is retreated on two 8-ft. jigs, each requiring 720 tons of solution, of which 520 tons goes with tailing and 200 tons with 128 tons concentrate, averaging 30% FeS_2.

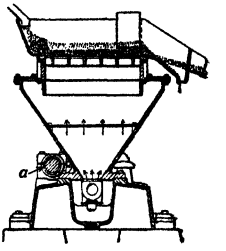

FIG. 31. James jig.

James jig (Fig. 31), for metallic ores, consists of a movable sieve box, usually less than 30 × 36 in., supported by means of a rubber diaphragm and spring-balanced connecting rods, one each side, rockers, pinned at *a* and oscillated by a suitable mechanism, causing an accelerated down stroke. A gate-and-dam discharge is located at the center of the discharge end; tailing overflows each side of the dam. Back water enters under a perforated baffle plate in the hutch.

At NORTH RIVER GARNET CO. (*118 J 529*) the machines are run at 225 s.p.m.; the bed is about 3 1/2 in. thick; screens are 6- to 30-m. Garnet is separated from hornblende and feldspar. Capacity is 10 to 50 tons per machine per 20 hr. depending on size of feed. About 2 hp. is consumed per sieve. At ELDORADO GOLD MINES, Great Bear Lake, working a pitchblende-silver ore averaging (1938) 26 oz. Ag and 1.064% U_3O_8, two sizes, 1/2-in.~4-m. and 4~14-m. were separately treated, each on two James jigs (*139 #4 J 35*). Screen on the coarse jig had 3/32-in. openings; on the fine jig, 0.063-in. Concentrate was drawn both above and below the screen; grade of hutch product was equal to or higher than the screen concentrate, provided a good bed was maintained. All tailing was recrushed and further treated (together with the primary <14-m.) by tables and flotation. Jig feed contained 31% of the U_3O_8 coming to the mill, about equally divided between the two sizes. RECOVERY by the coarse jigs, 71%; by the fine, 59.5%; total, 16.4% of the U_3O_8 to mill. Coarse concentrate assayed 116 oz. Ag and 28% U_3O_8; fine concentrate, 109 oz. Ag and 39% U_3O_8. Cost of jigging was 16.4¢ per ton.

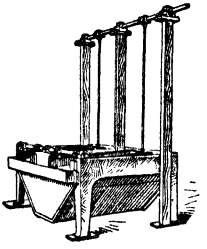
FIG. 32. Hooper vanning jig.

Hooper vanning jig (Fig. 32) consists of a shallow rectangular screen-bottomed tray open at one end, except for a shallow (1-in.) shoulder, suspended at the open end from a fixed shaft and at the closed end by an eccentric rod. The tray bottom slopes downward slightly toward the open end. A hopper-bottomed tank below the tray is filled with water to such a depth that the bed on the screen is submerged. The machine is run 240 to 330 @ 1- to 0.5-in. s.p.m., according to the fineness of the feed. Concentrate must be skimmed by hand. Hutch concentrate is discharged by spigot or by drag belt.

This jig was developed at the NORTH RIVER GARNET CO. for separating garnet from hornblende and feldspar and has been successful in this service. (See Sec. 3.)

12. HAND JIGGING

Hand jigging is an indispensable operation in preliminary field testing of ores, ranking with panning and vanning; it is frequently practiced in treating ores in prospecting and small-scale development work when it is endeavored to make the mine pay its way; and in certain districts, notably parts of the Mid-Continent lead-zinc field, it is established as the only method of concentration on many of the small properties.

Equipment and operation. For field testing, any small sieve such as a testing sieve, a bucket or tub of water, and small metal scraper or skimmer are all that are necessary. The screen is filled one-half to three-quarters its depth with the material to be tested, then, after careful submergence and thorough wetting, is held firmly in two hands with bottom horizontal and top just not submerged and moved up and down in such a fashion as will bring the material into partial suspension on the down stroke and allow it to settle back on the up stroke. This requires an accelerated down stroke and retarded up stroke. The usual speed is 60 to 100 s.p.m. After a small number of strokes, depending on the size of particles and relative specific gravities of the components of the bed, the impoverished surface layer may be scraped off and new feed added and the process repeated until the top of the middling layer becomes so high as to leave insufficient room for new feed. This layer is then scraped off and set to one side and concentrate is removed from the screen. Middling may then be put back to form the bed for further operations. The fine material that passes through the sieve and overflows the top is collected separately. If the jig screen is fine, this material is best cleaned up in a pan or plaque; if the screen is coarse, the fines may better first be rejigged through a bed of coarser concentrate on a fine screen, in this work accenting the start of the up stroke and working with the top of the jig-sieve box

always out of water. In this way considerable suction through the bed is induced and fine heavy mineral is thereby drawn through. Slime may be separated from this concentrate by decantation and be treated separately on a plaque.

A somewhat more elaborate testing jig may be made by suspending a jig sieve, say 12 × 12 in. and 6 to 8 in. deep by means of a rigid stirrup rod about 18 in. long, from a spiral spring of such strength that it is imperceptibly extended by the loaded jig sieve, yet extends readily under a downward pull by the operator and returns readily when the pull ceases.

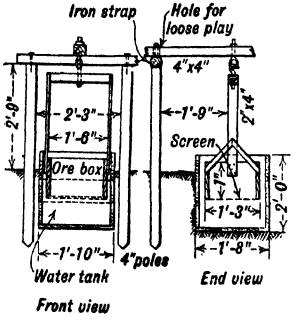

FIG. 33. Simple hand jig.

When any extended operation is contemplated a more elaborate rig is needed. Figs. 33 and 34 show two forms that have been successfully used. The simpler form shown in Fig. 33 (*89 J 1265*) was used at an isolated copper mine in northern Transvaal; the form in Fig. 34 is typical of Joplin practice. This type is best used with a spring board, so arranged that the handle is about waist-high to the operator while jigging. The compartmented box is used to provide a quiet pool for slime settlement. Proportions are such that an 8-in. bed on the sieve, when submerged, just about balances the handle. Capacity of such a jig is from 1 to 3.5 tons feed per sq. ft. per 24 hr.

Elmore (*18 CA 1132*) says that a Joplin-type hand jig with 24×66-in. sieve in a 6-ft.×6-ft.×33-in. tank can be built at not to exceed $60 (1920).

Performance. At SANTA BARBARA, Chihuahua (*87 J 910*), using a jig of the first type with a 3×3-ft. sieve, 0.25-in. aperture for coarse material and 0.12-in. for finer, the results shown in Table 44 were attained in treating 3,000 tons of oxidized lead ore. One Mexican laborer made about 0.5 ton of combined screen and hutch concentrate per 9-hr. shift. Thirty jigs were arranged in two rows with a track for a tailing car down the center and room for ready access of wheelbarrows to all jigs. At BERTA MINING CO., Encantada, Chih., Mex. (*10 MJA 6*), limestone-galena ore, carrying about 20% Pb and a little barite was treated by hand jigging at 2~3/4-, 3/4~1/4-, and <1/4-in. sizes. Jig box was 36 × 36 in., inside, and 46 in. deep; it was formed of 1-in. tongue-and-groove boards, with 2×4-in. corner posts which extended upward far enough to support the lever at a convenient height (7 or 8 ft.) above ground; the box was set about 18 in. in the ground. Basket was 35 in. square, outside, and 8 in. deep, made of 2-in. plank. It was hung by bridles and link from a hook on the lower end of a 1/4-in. rod suspended from the end of the working lever; this loose-jointed connection, together with the jar caused by teetering the lever over a square-edged (not rounded) support, was thought to be advantageous. Screen, of 20-gage steel wire, was 8-m. for the coarser, 20-m. for the fine ore; it was reinforced by ribs 1 in. deep, beveled top and bottom, and spaced 4 in. c-c. Screen concentrate was removed with a wooden scraper (to save wear on screen); to empty, remove, and repair the screen, and shovel out a full accumulation of hutch concentrate required about 1 hr. Two men in 8 hr. treated about 4 tons of ore. Concentrate was 60% Pb or better; barite, the chief impurity. Water consumed, about 20 gal. per ton jigged. In the JOPLIN, Mo., district (*93 J 1079*) three men operating two rougher jigs and one cleaner jig of the type shown in Fig. 34 will treat 15 to 30 tons of coarsely disseminated, non-clayey ore per 10-hr. shift. Feed is screened through 1-in. or 1.25-in. apertures; rougher-jig slots, 5/8- to 3/4-in.; cleaner-jig, 1/4- to 3/8-in.; stroke, about 1 in. on rougher and 1/2 in. on cleaner. If there is much clay in the ore it should be washed in a trough washer (Sec.

Table 44. Results of hand-jig operation on oxidized lead ore

	Ounces per ton		Per cent.		Value per ton
	Au	Ag	Pb	Cu	
Feed.....	0.12	8.0	11.6	.....	$18.41
Screen conc...	0.17	24.5	34.0	2.0	55.94
Hutch conc...	0.42	12.0	29.0	0.6	43.52
Tailing.....	0.06	3.0	2.5	.....	5.20

Table 45. Performance of a hand jig on Tennessee bituminous coal (*18 CA 1133*)

Product	Proximate analysis, per cent.				
	Ash	Volatile carbon	Fixed carbon	Sulphur	Moisture
No. 1					
Feed, raw coal...	26.05	27.72	46.08	0.58	1.49
Washed coal....	12.70	31.45	55.70	0.50	2.70
Middling.....	18.81	29.02	51.02	0.54	5.26
Refuse.....	59.32	17.25	23.28	0.58	2.12
No. 2					
Feed, raw coal...	12.91	30.48	56.46	0.47	1.51
Washed coal....	9.66	31.95	58.24	0.47	3.57
Middling.....	12.68	30.85	56.32	0.52	5.48
Refuse.....	53.04	21.14	25.67	0.38	3.09

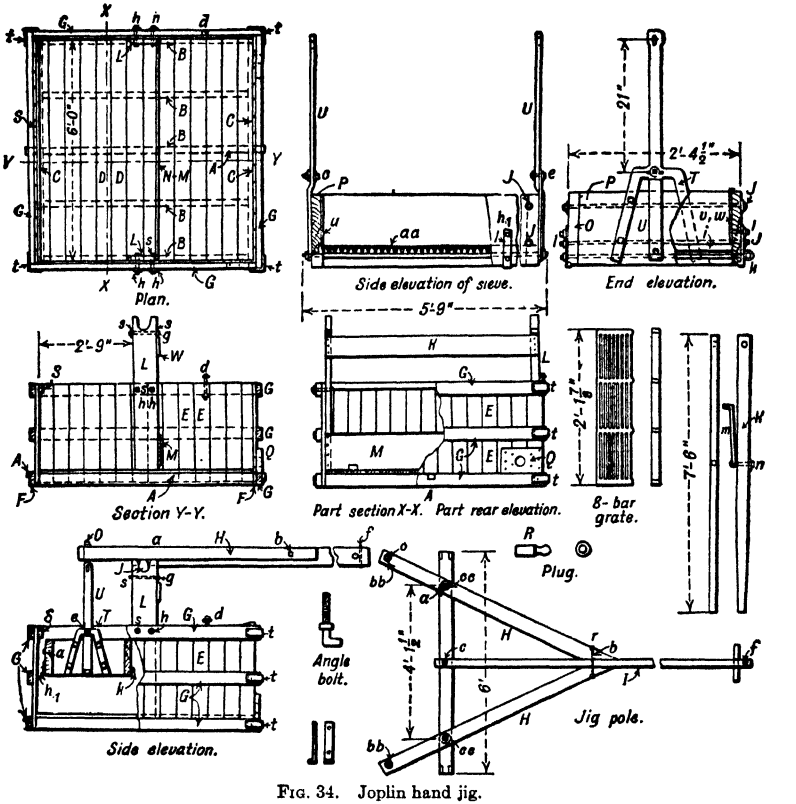

FIG. 34. Joplin hand jig.

Notes to Fig. 34

Figure	Number of pieces	Material	Figure	Number of pieces	Material
A	1	2×4 in. ×6 ft. 6 in.	e	2	1/2×1 3/4-in. bolts
B	4	2×4 in. ×5 ft. 8 1/2 in.	f	1	3/8×6-in. bolt
C	2	2×4 in. ×6 ft.	g	2	3/8×8-in. bolts
D	14	7/8-×5 1/4-in. ×6-ft. 6-in. flooring	h	4	3/8×4 1/2-in. bolts
			h_1	10	3/8×2-in. bolts
E	56	7/8-×5 1/4-in. ×2-ft. 8-in. flooring	i	1	5/8×5 ft. 9-in. rod
			j	4	5/8×3 1/2-in. rods
F	4	7/8×1 in. ×6 ft. 2 7/8 in.	k	1	5/8×31 1/2-in. eye-rod
G	12	2×4 in. ×6 ft. 3 3/4 in.	l	2	1 1/4 × 3/8×6-in. irons
H	2	4×4 in. ×7 ft. 1 1/2 in.	m	1	1/2×19-in. eye-hook
I	1	2×6 in. ×20 ft.	n	1	1/2×5-in. eye-bolt
J	1	4×6 in. ×6 ft.	o	2	3/4×2-in. angle bolts
K	1	2×4 in. ×7 ft. 6 in.	p	5	5/8-in. cut washers
L	2	2×8 in. ×4 ft. 2 in.	r	8	1/2-in. cut washers
M	1	1×12 in. ×6 ft.	s	14	3/8-in. cut washers
N	1	1×6 in. ×6 ft.	t	12	Corner irons
O	2	2×12 in. ×5 ft. 6 in.	u	2	9 1/2-in. ×2-ft. 1-in. No. 16 sieve liners
P	2	2×12 in. ×2 ft. 1 in.			
Q	1	2×8 in. ×14 in.	v	1	10 1/2-in. ×5-ft. 4-in. No. 16 sieve liner
R	1	4×4×10-in. plug			
S	1	1×2×6 in.	w	1	9 1/2-in. ×5-ft. 4 1/2-in. No. 16 sieve liner
T	2	Angle irons			
U	2	Hanger irons	4a	8	1/2-in. cast washers
a	2	5/8×11-in. bolts	aa	10	Grates
b	1	5/8×9-in. bolt	bb	2	3/4-in. cast washers
c	1	1/2×11-in. bolt	cc	4	5/8-in. cast washers
d	1	1/2×6 1/2-in. bolt.			

10, Art. 8) or the equivalent before jigging. Rougher jigs are run with no bed, and each charge, after stratification, is divided by skimming into tailing, middling for sale to the mills, and concentrate. Hutch product collects in the jig box for retreatment on the cleaner. On the cleaner the operator starts with a 2-in. bed and allows it to accumulate until about 6 in. thick, when it becomes too heavy to handle and is skimmed down to 2 in. again. The hutch product through the thin bed may have to be recleaned through the thick bed. Treating <3/4-in. WOLFRAMITE ORE with a quartz gangue on a jig such as shown in Fig. 34, using 10-m. screen, the procedure was to charge 70 lb. of ore, jig for 1 min. (about 150 strokes) with an average stroke length of 1 in., longer at first and shorter at the end, shovel off tailing, then charge another 70-lb. lot and repeat. About 5,000 lb. of ore carrying 5% tungstic acid was treated per day, yielding 175 lb. of screen concentrate assaying 65% tungstic acid, and 200 lb. hutch product assaying 8%. Tailing from the screen assayed 0.7%. In another district, concentrating ferberite from quartz and granite (*101 J 717*), feed, <3/4-in.; sieves, 2 to 4 sq. ft.; stroke, 0.5 to 3 in., speed about 40 s.p.m., and 2- to 3-in. bed, from 1 to 5 ton per 8-hr. shift was treated, including recleaning of concentrate to two grades, *viz.*, 50 to 63% tungstic oxide and 25 to 40%. The hutch product was only slightly enriched. Water consumption per jig was about equal to the overflow through a 1-in. pipe. Table 45 shows the performance of a hand jig on BITUMINOUS COAL.

13. DESIGN AND OPERATION OF JIGS

Factors which affect a jig bed and, therefore, determine its performance are in part conditions precedent to delivery of feed, in part structural, and in part operating, *i.e.*, variables in current control of the operator. A jig is chosen or designed to accommodate, in so far as possible, the conditions precedent; the attendant changes operating variables to complete the accommodation.

The essential requirements in jigging are to obtain and maintain a 3-layered bed comprising:

(1) A separating layer having an effective density suitable for the final separation desired.

(2) A roughing layer that will immediately reject material certainly unwanted at the jig screen, and will get doubtful material to the separating layer as quickly as possible.

(3) A presenting and transporting layer.

Separating layer. A suitable separating layer is one that absorbs or passes particles of concentrate and rejects heavy middling. It is desirable that it do these things quickly. The factors that affect the character and performance of the separating layer are the specific gravity, size, size range, and shape of the particles which form it; its depth and uniformity; and the character of the upward forces to which it is subjected.

Any characteristic of the particles in the layer that increases its resistance to dilation increases the upward pressure of the water dilating it, and, consequently, increases the constant pressure that such water (and the bed particles themselves as transmitters of the water pressure) exerts against the underside of particles seeking to enter or penetrate the bed. High specific gravity, large size, a long size range, and flat shape of bed particles all tend to increase back pressure of the bed.

Any characteristic of the bed particles that causes them to resist movement past each other increases plastic resistance of the bed. Large size, angularity, and roughness of particle surface are the principal characteristics thus acting. See Fig. 3 and the discussion thereof.

Back pressure varies as thickness of layer and as total depth of bed.

Uniformity of separating layer, both as to thickness and grain-size distribution, is essential to good operation. Any departure therefrom causes difference in back pressure at different parts of the layer, with the result that water flow increases through the region or regions of reduced resistance and boiling occurs. This reduces effective density in the regions affected and permits penetration by particles of lower specific gravity than are wanted.

The product of length of stroke and frequency is a rough measure of intensity of pulsion, *i.e.*, the impulse available for conversion into upward pressure. Within limits, inverse variation of these two elements of operation produces no material effect on the behavior of the separating layer except that boiling is less likely to occur at the higher speeds. Beyond the limits, long stroke at slow speed loosens a fine bed to an extent that reduces plasticity materially and thereby reduces effective density. At the other end of the scale, high speed with short stroke does not dilate a bed sufficiently to permit penetration by par-interstitial or superinterstitial particles.

A slow stroke, particularly one that accelerates slowly, does not develop back pressure rapidly enough to produce satisfactory dilation; a sharp stroke (rapid initial acceleration) lifts the bed as a whole (see Fig. 2 and discussion). If frequency is low this may have the effect of increasing duration of dilation, but at high frequency a tight bed with high effective density is formed, since there is little or no dilation on the lift and dilation by free-falling has insufficient time to develop.

Roughing layer has a separating function like that of the separating layer beneath it, but with a definite time factor imposed (see Fig. 4). If a particle doesn't penetrate to the bottom of the roughing layer before the rising current starts near the tailboard, it never has a chance to get into concentrate in that particular compartment. It follows that the roughing layer should have an effective density as low as is consistent with (*a*) exclusion of coarse gangue which, if it penetrated, would tend to clutter up the upper surface of the separating layer; and (*b*), with lifting out heavy middling at the tailboard. It should also have sufficient thickness to cushion against the plunge of the feed stream and to give some resistance to the start of boil-spots in the separating layer.

Top layer has the two functions: (*a*) to spread out the feed so that all particles get to the roughing layer, and (*b*) to get from the head end to the tailboard as quickly as is consistent with performance of (*a*). It should, therefore, be thin and fluid.

Conditions controlling design and operation (conditions precedent) are: (*a*) mineralogical characteristics of the feed, (*b*) its size and size range, and (*c*) its rate. Their effects are discussed below.

Design

Elements of design are: (*a*) dimensions of bed; (*b*) DROP, *i.e.*, the vertical distance from feed lip to the overflow edge of the discharge weir; (*c*) distribution of pulsator water; (*d*) accelerative character of stroke; (*e*) method of withdrawing products; (*f*) number of compartments; (*g*) screen.

Dimensions of bed all have an effect on performance. The horizontal area, taken with the feed rate, is the primary factor in determination of the time that the average particle spends in the bed, but time for a grain of a given character (heavy, light, or intermediate) is controllable over a considerable range by the operator.

The WIDTH of the screen is limited by the difficulty of obtaining an even distribution of water in the screen compartment. The practical limits lie between 24 and 36 in. With the width fixed between these limits, the required area and time are obtained by increasing LENGTH. It is better to divide the screen transversely into compartments the length of which is from 1.2 to 1.5 times the width than to attempt to get the required area in one or two compartments, even where the exigencies of mineral separation would not require the greater number of compartments. (See below.) Large area and concomitant time are particularly necessary for close separations such as between a concentrate and a high-grade middling or between a low-grade middling and a tailing, because here the bed becomes practically two-layered, with the roughing layer eliminated, and the difference between specific gravity of presented particles and effective density of separating layer is small.

Representative figures for area are given in Table 46. The limiting size of jig screen is reached when the jig members become so massive as to be unduly expensive and maintenance becomes difficult. The plunger rods on excessively large jigs break frequently and support must be used extravagantly to prevent the sides from bulging and leaking.

Table 46. Capacities of fixed-sieve jigs

Plant	Ore	Size of feed, mm.	Tons per square foot per 24 hr.
Bunker Hill & Sullivan	Galena-siderite-quartz	7~2.5	13.8
		2.5~0.15	6.5
Doe Run No. 3	Galena-limestone	2	2.5
Gennamari	Galena-limestone	15~4	2.25
Gennamari	Galena-limestone	4~1	2.0
Daly-Judge	Galena-blende-quartz	10~5	4 to 5
Clausthal	Galena-blende-quartz-limestone	8~2	1.8
Wisconsin	Blende-chert-dolomite	10~0	1.5 to 2
Tri-State (Cooley rougher)	Galena-blende-dolomite	<12 deslimed	7.2 to 8.6
Tri-State (Cooley cleaner)	Galena-blende concts	<10	2.5
Mascot (Cooley rougher)	Blende-dolomite	<10	7.1
Broken Hill South (May)	Galena-blende-limestone	<4.2 deslimed	10.9

DEPTH of bed determines the amount of latitude left in the hands of the operator. The thicker any given layer is, the more time there is available for doing the job of that layer and the smaller the part of its function that is loaded onto the underlying layer. (For methods of separate control of depth of various layers see *Operation.*) When a clean finished product is desired, a deep bed is necessary. A large difference between specific gravities of the mineral species to be separated makes a relatively shallow bed permissible. A large proportion of heavy mineral, which makes for a large amount of locked middling and, consequently, a thick roughing layer, permits use of a shallower bed than otherwise. Depth of bed is properly reckoned in terms of number of grains, hence for a given kind of service the actual depth will be greater for coarse feeds than for fine, but the depth reckoned in number of grains will be greater on a jig treating fine feed. In any jig making a gate draw the layer of concentrate must be at least three grains deep, if the cup is set at the minimum height, in order to insure exclusion of mid-

Table 47. Rising back water per min. through jig sieve (*After Demond*, 68 *A* 455)

Jig A (Fig. 35)

Water per sq. ft.; clean screen, no ore							Water per sq. ft.; with ore bed						
Third nearest plunger		Center third		Third farthest from plunger		Total pounds. 100%	Third nearest plunger		Center third		Third farthest from plunger		Total pounds. 100%
Pounds	% of total	Pounds	% of total	Pounds	% of total		Pounds	% of total	Pounds	% of total	Pounds	% of total	
8.4	97.7	0.2	2.3	0.0	0.0	8.6	.....	.....	.....	.....	.....	.....	.....
30.3	64.6	14.2	30.3	2.4	5.1	46.9	22.4	71.8	8.8	28.2	0.0	0.0	31.2
43.1	58.7	23.0	31.3	7.3	9.9	73.4	43.9	59.3	28.2	38.1	1.9	2.6	74.0
50.2	54.4	31.1	33.6	11.1	12.0	92.4	58.0	57.9	35.6	35.6	6.5	6.5	100.1
54.6	52.3	35.6	34.2	14.1	13.5	104.3	69.5	59.5	40.6	34.7	6.8	5.8	116.9
60.0	53.7	36.3	32.5	15.5	13.8	111.8	66.1	50.5	56.1	42.8	8.8	6.7	113
Jig B (Fig. 35)													
22.8	53.5	19.2	45.1	0.6	1.4	42.6	35.3	30.7	42.9	37.2	37.0	32.1	115.2
51.5	29.2	67.8	38.5	56.7	32.3	176.0	55.2	32.8	60.3	35.7	53.1	31.5	168.6
99.2	30.9	111.2	34.7	110.3	34.4	320.7	89.4	31.5	97.0	34.2	97.1	34.3	283.5
.....	.....	.....	.....	.....	.....	.....	89.3	29.4	108.5	35.8	105.4	34.8	303.2
.....	.....	.....	.....	.....	.....	.....	136.5	31.6	143.4	33.1	152.8	35.3	432.7
.....	.....	.....	.....	.....	.....	.....	128.8	29.6	153.1	35.2	153.1	35.2	435.0

dling grains from the pen. This necessary minimum depth will be relatively greater the smaller the particles. The overlying middling layer constitutes the testing zone in which concentrate is separated, and must be deep enough to prevent penetration by lighter grains during local disturbances. The required depth will vary from that of the concentrate layer to twice that figure. The surface layer need not be more than one grain deep, but limitation to this depth will require such a high surface velocity in order to move the desired tonnages that it will be difficult to attain complete settlement and saving of the difficult grains. The minimum depth for coarse feeds is, say, 7 times the diameter of the larger particles constituting the gate discharge; better 12, if clean concentrate is to be taken; the depth may be less with the coarsest feeds, if middling only is to be roughed out. With fine feeds (2 mm.) the minimum depth is about 20 times the grain diameter. With much top or cross water the bed must be relatively shallower in order to get rapid removal of values in a soft bed to counterbalance the rapid horizontal flow.

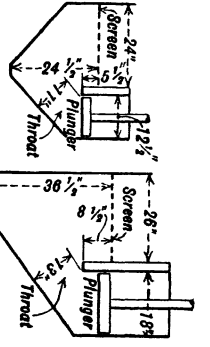

FIG. 35. See Table 47.

Number of compartments depends upon the duty demanded, upon size of material treated, and upon operating considerations. A single bed treating a natural ore can make one finished product only. Hence, if the jig is required to make one finished product only, a single-compartment jig will do the work. If two concentrates of different minerals are to be taken but finished tailing is not desired, a three-compartment jig is necessary, making clean heavy mineral on the first compartment, clean mineral of intermediate specific gravity on the third, a middling product consisting principally of locked grains of the heavy and intermediate-weight mineral in the second, and a product over the tailboard of the third compartment containing little or no free mineral but much middling. If clean tailing is likewise desired, from three to nine compartments will be necessary, depending upon whether one or two concentrates are to be taken and also upon the relative specific gravities of the gangue and valuable minerals, as well as upon the grade of tailing desired. For a one-mineral separation such as quartz-galena,

three compartments will serve, if tailing requirements are not rigid, otherwise four; corresponding figures for blende-quartz are four and five. For two-mineral separation, such as galena and blende from quartz, five compartments will be required to yield relatively high-assay tailing to nine for low-assay tailing with ores in which the mineral is intimately disseminated in the gangue. The number of compartments necessary increases with decreasing size of feed. At CLAUSTHAL (*100 J 426*), jigging closely sized feeds and making lead and zinc concentrates and a tailing, a 4-compartment jig was used on the 11~2.8-mm. size and a 5-compartment jig for the 2.8~1.4-mm. material and also for the classified sands <1.4-mm. At BLEISCHARLEY (*112 A 952*), treating short-range lead-zinc-dolomite ore, feeds down to 14-mm. are jigged on three compartments; nine smaller sizes, each on five compartments.

Compartmentation aids operation; it increases the number of concentrate draws, thus making it easier to maintain uniform thickness of the bottom layer; it gives greater flexibility and so permits closer regulation of grade of final products; and permits greater over-all drop, which makes for easier control of the top layer. The principal drawback is that it increases total bed perimeter, which tends to increase leak of overlying layers into concentrate.

Drop, taken with cross water, controls the flow rate of the top layer. Since there are definite limits to water control and it is the principal minute-to-minute control of the operator, drop should be made as steep as is consistent with good operation, in order that normal top-layer flow may be taken care of without much cross water. A large drop takes care of rushes of feed without clogging the flow, and permits loosening the rush by additional cross water without danger of churning up the top of the roughing bed. On the other hand, a large drop with a lightly loaded bed means considerable churning at entry and a relatively thin top layer. The churning helps to loosen the bed, but there are better ways of doing it. A thin top layer tends to raise grade of tailing. In former practice the drop averaged about 1 in. and this figure is probably the best today for slow, close work on closely sized feeds. For rapid work, on roughly sized or unsized feeds, from 2- to 3-in. drop is common.

In the DeMier "level" jig (*IC 6342*), employed in the Tri-State zinc field for retreatment of the low-grade, deslimed sand middlings, the screens of the six 32×42-in. compartments are set at the same level, forming a practically continuous screen from end to end of the jig, which is otherwise of typical Harz design. A mechanical rake, similar to that on Dorr deslimers, with blades about 18 in. apart, moves the top layer of ore toward the discharge end.

Distribution of pulsating water is aided by keeping the path of the water through the under-sieve box as straight as possible; making the conduit within which the water pulsates as uniform as possible in cross-section; and supplying vanes directly under the screen to break up large-scale eddying. The first desideratum is served by placing the pulsator directly beneath the screen, but this introduces other complications, *e.g.*, hutch discharge and mechanical drive. Much the same end is served by making the hutch deep and extending the partition between plunger and screen compartments correspondingly far down. This has the disadvantage of considerable loss of headroom on hutch concentrate. Richards recommended that the lower edge of the partition should extend at least 0.4 times the width of the screen compartment below the screen in coarse jigs and 0.33 times in fine. Table 47 shows what can be done by attention to such details. The nearest approach to a uniform water passage in the usual top-drive longitudinally partitioned jig box with V-bottom is obtained by carrying the partition down to such a depth that the distances from the bottom of the partition to the sloping walls are equal and equal to the widths of the compartments. Some makers fabricate the bottom semicylindrical to do away with the variation in cross-section due to the point of the vee and the junctures of bottom with side walls, but since hutchwork tends to settle and build up to a chord of the cylinder, no permanent advantage results.

Usual practice is to extend the screen-supporting grid several inches below the screen in order to prevent large-scale eddying. Some makers use longitudinal supporting bars extending progressively deeper at increasing distances from the central wall. Plunger and screen areas are usually made equal in order to eliminate velocity changes with resulting eddies; if areas are unequal the plunger area should be the smaller.

Screen affects the action of the bed and determines the relative sizes of grains in gate and hutch discharges. The screen must be rigid, if boiling of the bed is to be prevented and a uniform thickness of bottom layer is to be maintained. This requires that the screen be supported on a grate and tacked or wired thereto and that the grate bars be spaced with regard to the flexibility of the screen. The screen should have the maximum possible percentage of opening in order to obtain the highest fluidity of bed with minimum water and also to obtain uniformity of water distribution and prevent boiling. Screen openings should converge upward to reduce blinding. Punched plate has maximum rigidity and the most favorable shape of opening, it is easily cleaned by a scratching tool and is but little damaged thereby; but woven wire has the greater percentage of opening in the fine sizes. Slotted punching, 1/16×5/8-in. to 3/16×3/4-in., hit-and-miss endways, is preferred in Joplin, and is common on Malayan tin dredges. It is placed with the long dimension across the jig. It does not blind so readily as the round hole, is more readily cleaned, and is stiffer for a given percentage of opening. Grates have been used to a considerable extent to replace screens in Mid-Continent mills. Grates are usually made in sections, 6 in. wide by the length of the compartment, and with 1/16- to 3/16-in. spacing. Osage orange wood is used for wooden grate bars because of its hardness and the fact that it does not swell and close the openings between bars. Wooden grates clog less than iron, because they are more smooth and flexible; they also resist acid water. Life of wooden grates is claimed to be 8 to 12 mo. under hard service in acid water against 2 weeks for the iron grates. Such grates have less percentage of opening than cloth or punched plate, but they are more rigid, blind less readily, and are more easily cleaned. SCHUBERT GRATE, designed primarily for coal jigs (*67 G 834*), aims to increase capacity by accelerating the forward movement of the bottom layer, without resorting to excessive speed, length of stroke, or water supply. Iron bars, having the cross-section shown in Fig. 36 placed crosswise to the direction of travel, impart a horizontal component to the motion of the rising current. Among other effects, this promotes an even horizontal distribution of the several layers in the jig bed, and thus assists in maintaining uni-

form water velocities. Open space in the grate is about 51%, compared with 33% in a punched screen with 7-mm. holes. Experiments (*32 ME 312*) showed that resistance offered by the screen is the largest item in the power consumption of a jig in normal operation, its importance increasing rapidly with velocity of the water.

Size of aperture depends on the size of feed, the place that concentrate is to be taken, and the grade of concentrate desired. Coarse feed requires and permits large apertures. Concentration through the screen requires larger apertures than concentration on the screen permits. If apertures are small, small particles will be kept on the screen, thus reducing the size of interstitial spaces in the concentrate bed. The result is to increase interstitial velocities, but also to increase the differential between upward and downward velocities in favor of upward; this keeps fine gangue out of hutch concentrate and facilitates drawing down fine mineral. Hence a relatively smaller aperture is used when clean concentrate is desired than when the principal endeavor is for clean tailing. With short-range feeds the screen aperture is made slightly less than that of the sizing screen preceding except that the jig-screen aperture is rarely less than 2 or more than 5 mm. With natural or long-range feeds, the aperture is determined to a considerable extent by the character of work desired and the minerals in the feed. In Wisconsin a typical set of screens on an 8-cell rougher jig, treating 3/8-in. lead-zinc feed and making practically all concentrate from the hutch, is 1/8, 3/16, 1/4, 1/4, 1/4, 3/16, 3/16, and 3/16-in. The screens on the following 7-cell cleaner had 3/32, 1/8, 3/16, 3/16, 3/16, 1/8, and 3/16-in. apertures. In the Tri-State field, a typical 7-cell cleaning jig, producing clean galena from the first and clean blende from the third and following cells, mainly through the screens, has apertures, 3/16, 3/16, 1/4, 1/4, 3/16, 1/8, and 1/8-in. When a jig is run to take all of the concentrate through the screen the aperture may be made considerably larger than the largest particle of concentrate in the feed, and a ragging of proper specific gravity, composed of particles larger than the apertures, is placed on the screen before jigging starts. In such practice at Clausthal, with a feed between 2.8- and 2-mm., the screen apertures were 3- to 4-mm.; with feed 2- to 1.4-mm., the apertures were 2- to 3-mm.; four grades of sand finer than 1.4-mm. were jigged on and through 1-mm. aperture. In the N. J. Zinc mills, treating five short-range feeds between 2.41- and 0.58-mm., apertures on each jig are about twice the size of the largest grain in its feed, and the ragging is about twice the diameter of the apertures; this completely prevents blinding of the screens. On Malayan tin dredges recovering cassiterite practically all <10-m. and most of it much finer, roughing-jig screens commonly have 1/8-in. slots and ragging is 3/8~1/2-in. hematite grains; cleaning jigs have 1/16-in. slots and 1/4-in. ragging.

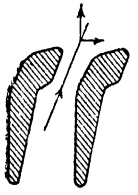

Fig. 36. Schubert grate.

Grids for supporting screens are made of wood or cast iron. Wooden slats are placed from 1 to 6 in. apart according to the amount of support required, and should run at right angles to the length of the jig so as to cause least disturbance in the plunger-water currents. Slats should be beveled to an edge at the top to lessen the area of dead space above them; also on the bottom, to reduce eddying resistance. Where there is much acid in the water wooden grates are practically indispensable. Cast-iron grids usually have square or rectangular openings, 3 to 6 in. on a side. Grids and screens should be readily removable. This can be done by making the screen-compartment liners in four pieces and holding them in place with wedges, as shown in Fig. 26, and making the hood (gate) also readily removable. By rings or hooks attached to the grate, and a small grappling sling suspended above the jig, a screen may be quickly removed with most of the bed in place; this can be dumped on the replacing screen, allowing the first to be cleaned or changed at leisure. Screens are frequently sloped 1 to 2 in. in their length toward the discharge end in order, by greater depth, to compensate for impoverishment and maintain uniform resistance to the water currents. When a screen is to carry permanent ragging, it is usual to add a grid above the screen, similar to the one below, forming pockets 1 to 3 in. deep to restrain lateral movement. At Broken Hill, N. S. W., the upper grid is cast in soft brass so that it can be drawn down tightly against the cast-iron lower grid without cracking.

Concentrate draws. The best known is the gate-and-dam shown in Fig. 37. Discharge is prevented until there is a sufficient bed of heavy mineral formed to seal the opening between the lower edge of the gate and the screen. When the dam is lowered discharge begins and continues until a condition of equilibrium is reached, when the hydrostatic head of the column of heavy mineral *H* within the pen, when in partial suspension in the upward current and therefore free to flow, is just less than that of the composite column of heavy mineral, middling *M* and light mineral *L* without, friction losses due to flow of the bed of heavy material across the screen and under the gate constituting a deduction from the head of the bed outside the pen. With any given setting of the dam, increase in the amount of heavy mineral in the bed will cause corresponding increase in flow over the dam; decrease will cause cessation. This type of draw is usually placed at the front side of the screen compartment near the discharge end. Thus placed it requires that most of the concentrate travel at an angle more or less acute to the forward travel of the overlying bed as a whole, part of it at right angles and a certain part must actually travel against the stream, if it is to discharge. The result is necessarily some loss of free mineral over the tailboard of the compartment, but the most serious objection to this placing occurs when concentrate must be removed rapidly; the surface of the concentrate layer then slopes steeply down to the bottom edge of the pen, causing a boiling at this point and consequent contamination of the concentrate by material from the overlying layers. This type of draw is sometimes placed at the discharge end of the compartment with the concentrate-discharge spout running in the compartment partitions. This placing is superior as to removal from the bed, but will give some trouble by clogging. Fig. 13 shows a pipe draw designed on the same principle; it makes the concentrate travel in a more favorable path than the side draw. The portion of the jig bed adjacent to any draw is coarsest. This produces a

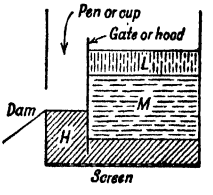

Fig. 37. Gate-and-dam jig discharge.

"live spot" in the bed that will permit gangue to pass down into the hutch, and wear on the screen is greatest at this point, which aggravates the trouble. The size of the pen in discharges of the gate-and-dam type and of all ore passages should be sufficient to allow free movement of impounded material, *i.e.*, at least three times the diameter of the largest particles, better more. There are a number of other draws whose fitness may be tested according to the method of analysis given. HUTCH-WORK JIGS, of both fixed- and movable-sieve types, intended to deliver concentrates mainly or exclusively through the screen, sometimes need facilities for discharging accumulations of coarse concentrate into the hutch; this occurs most frequently when jigging materials yielding large proportions of concentrate. Such discharge gates have an advantage over those above described in that they may be placed anywhere on the screen, as found best to maintain an even distribution of bedding. For continuous discharge, the CUP GATE operates on the same principles as the gate-and-dam; a short piece of pipe comes vertically through the screen and projects a short and adjustable distance above it; its upper end is surrounded and covered by an inverted cup, the lip of which is supported at a fixed or adjustable distance above the screen, making an exit for concentrates approaching from all sides. If desired, such a gate may be arranged to deliver its concentrate separately through the side of the hutch, with its flow under control by an outside valve. For intermittent discharge, the PIN DRAW, as found in the TRI-STATE field, is a short piece of 3/4-in. iron rod stuck into a hole through the screen, and withdrawn at intervals. A device used on fluorspar jigs at ROSICLARE (*135 J 301*) comprises a 5×5-in. piece of 1/4-in. steel plate with a 1 1/2-in. hole at its center, bolted to the screen over a corresponding hole. An 8-in. piece of 1 1/2-in. pipe is welded to the upper side of the plate, leaving a cutaway space 3/4 in. high halfway around the bottom of the pipe. A loose piece of 2-in. pipe, 12 in. long, with its lower end similarly cut, fits over the smaller pipe and regulates discharge as turned.

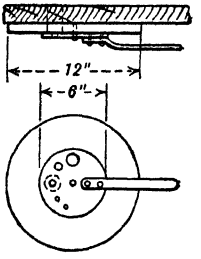

FIG. 38. Slush gate for jig hutch.

Hutch draw must be capable of close adjustment in order that suction may be carefully controlled. Such adjustment results in frequent clogging, hence the draw should be of such variety that it can be opened wide to remove obstruction. When the ordinary pipe-and-plug spigot is used, the working plugs can be fitted into the center or bottom of a 6-in. plug, which is readily removed when necessary. The ordinary molasses gate, 1 1/2- to 3-in. sizes, is frequently used. Rotating slush gates (Fig. 38) are common when continuous hutch discharge is to be maintained.

Plunger having the same area as the screen permits symmetrical construction, minimum changes in velocity of water currents between the two compartments, and readily understood adjustment. There is some advantage in making the plunger larger than the screen, which allows shorter plunger stroke and larger throat, thus producing a free action in the beds and reducing power consumption. Plungers smaller than screens are found mainly in those jigs of Harz type which employ accelerated pulsion strokes. For most efficient mechanical operation the plunger should fit its compartment as snugly as possible without binding. The usual fit is between 1/16- and 3/16-in. clearance all around. Small plunger clearance creates strong suction and where this is undesirable a close fit must be compensated by plunger valves; otherwise excess back water must be used to cut down suction. Fig. 39 shows a form and arrangement used on a Malayan tin dredge, made of 1/4-in. rubber backed by 1/4-in. board. A loose plunger requires a longer stroke than one that is tight-fitting. Clearance must be greater when water is fed above the plunger than when introduced below. Introduction of water below the sieve is likely to cause collection of air under the plunger with consequent uneven action. Plungers are built up of five courses of 1-in. tongue-and-groove stock, thoroughly wet with good white-lead or asphalt paint, laid with alternating courses at right angles and closely nailed. The outer courses are cut shorter than the center to allow for rocking of the eccentric. Courses both sides of the center course are shortened about 1/8 in. all around to provide water packing. Eccentrics should be of extra-heavy pattern with spherical sliding surfaces to prevent binding. They should be evenly spaced around the shaft to equalize motor load and avoid rhythmic vibration. It is a convenience if they are graduated to show length of stroke. The bottom of the plunger should never rise above the sieve.

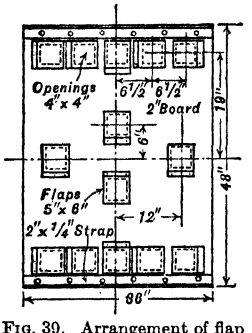

FIG. 39. Arrangement of flap valves on a large jig plunger (bottom view).

Jig box and frame. All dimensions are substantially fixed by the rules already set down. The hutch product cannot be drawn clean unless the bottom is hoppered both ways to the draw valve. The usual practice is to carry the front wall straight down. If of wood, the walls should be not less than 3-in. surfaced plank, except for very small jigs. Even with this weight there will be some bulging (BREATHING) with long strokes if the compartments are long and the span of the planks correspondingly great. All planks should be carefully tongued and grooved or grooved and joined with close-fitting feathers, and the joints should be set in white lead. Transverse partitions should be dapped into the walls and the centerboard dapped into the transverse partitions. Fig. 7 shows a cheaper method of wall construction, using 2×3- or 2×4-in. scantlings set in paint and packed with wicking, then securely spiked. This is particularly suitable for bull jigs (Art. 6), which would require very heavy planking. Posts should be at least 6×6-in., better 6×8-in. in large jigs, with caps and sills the same width and 1 or 2 in. deeper. Mortise the posts into cap and sill, but provide for draining the sill joint. Transverse tierods should be bored through the body of a transverse plank rather than let in in place of a feather, otherwise a difficult leak will occur. Strap bolts (Fig. 6) are easier to put in and just as satisfactory as through rods from cap to sill. Floor space may be saved by placing jigs back-to-back, or face-to-

face. **Jig walls** are sometimes built of reinforced concrete about 4 1/2 in. thick. (*109 J 1115.*) Factory-built jigs are usually of sheet steel with welded joints. N. J. ZINC jig is assembled from specially designed cast-iron plates.

Transmission machinery. Shaft should be 2 7/16-in. minimum for fine jigs with compartments up to 36-in. length; 3 7/16 will carry a long-stroke plunger in a 48-in. compartment. Pulleys should be keyed and set-screwed, and of ample face. Tight-and-loose pulleys should always be provided. Common flat boxes will serve, but adjustable ball-and-socket bearings will pay for themselves many times over in ease of maintaining alignment.

Character of pulsator stroke has a marked effect on the performance of the bed. (See under ***Separating layer,*** p. 46.) The factors are average speed, stroke length, and acceleration. Acceleration is, almost of necessity, built into and fixed with plunger and diaphragm-type jigs, but is an operating variable in the air-pulsated types. Stroke length is an operating variable in all jigs; from the designer's standpoint the problem should be to make variation as easy and quick to achieve as possible. Speed is not an operating variable in most cases, but should be made so, if possible. Despite that intensity of impulse is, for a given mechanism, satisfactorily controllable through stroke length alone within limits, a much greater flexibility could be put into the operator's hands by providing this additional control. (See also ***Length of Stroke,*** p. 53.)

Operation

Control in operation is effected by changing the effective density of the separating bed. For superinterstitial and par-interstitial grains this may be done by varying either the liquid pressure or the plasticity; for subinterstitial grains plasticity is not a factor in resistance, but change in plasticity is accompanied by changes in interstitial current velocities that are important.

Minute-to-minute control of most jig operation is effected by change in water quantities, in thickness of separating layer, and in feed rate. Air-pulsated jigs permit change also in length and sharpness of stroke without stopping and independently. Stroke length can be changed on mechanical jigs by stopping, but sharpness of impulse is not a variable except as velocity of the pulsator is changed by varying length of stroke at constant speed. Screen aperture is a simple structural change. Size, size distribution, and density of separating layer are effective controls in jigging through the screen but not otherwise.

Water for control is fed to a jig either above the screen (TOP WATER) or beneath the screen (BACK WATER); the sum of all of the water flowing across a given compartment is the CROSS WATER. All other things being equal, quantity of cross water controls horizontal flow of the upper layers of the bed. Back water affects the difference between rising and falling water velocities; much the same effect is obtained by control of water withdrawn from the hutch during operation. When downward velocity exceeds upward the effect is called SUCTION.

Effects of back water are shown in Tables 48, 49, and 50. In Table 48 it is apparent that suction increases time-factor for a given recovery with short-range feeds, but is essential when the heavier mineral is subinterstitial. Table 49 shows the same general picture, but additionally that for short-range

Table 48. Jigging tests on quartz and galena (Quartz 1.73-mm. (0.0683-in.) diameter in all cases) (*After Richards*)

Size of galena, mm.	Time and number of strokes required to effect . . . per cent. recovery of galena								
	Much suction			Little suction			No suction		
	Time, seconds	Number of strokes	Per cent. recovery	Time, seconds	Number of strokes	Per cent. recovery	Time, seconds	Number of strokes	Per cent. recovery
1.73	40	257	100	15	95	100	4	18	100
1.09	45	302	100	60	384	100	10	50	100
0.67	135	748	98	30	153	98	10	62	98
0.50	60	337	99	40	210	99	60	368	95
0.24	30	190	100	30	153	100	60	368	60 *a*
0.107	15	86	100	5	30	*b*	*c*	*c*	*c*

a Balance in equilibrium with quartz.

b Coarse all through; fine in equilibrium with quartz.

c Not tried as it was recognized from the preceding tests that galena would rise to the surface of the quartz bed.

feeds with relatively low concentration criteria it is necessary to have a loose bed (low effective density) to maintain capacity, although good recovery can be made in time with a tight bed. Comparing Tables 48 and 49 brings out that penetration of the tailing (top) layer of a tight bed by superinterstitial particles of galena is about 10 times faster than for sphalerite, but that the difference is materially less for subinterstitial particles. Table 50 shows the effect of change in suction on the distribution of con-

Table 49. Jigging tests on quartz and sphalerite (Quartz diameter 1.73-mm. (0.0683-in.) in all cases) (*After Richards*)

Size of sphalerite, mm.	Time and number of strokes required to effect . . . per cent. recovery of sphalerite								
	Much suction			Little suction			No suction		
	Time, seconds	Number of strokes	Per cent. recovery	Time, seconds	Number of strokes	Per cent. recovery	Time, seconds	Number of strokes	Per cent. recovery
1.73	420	2,129	96	60	306	99	60	147	98
1.09	360	1,676	95	180	838	99	60	202	95
0.67	360	1,759	95	180	846	100	300	496	50 *a*
0.50	120	603	100	300	1,382	98	*b*	*b*	*b*
0.24	45	208	99	360	1,729	97	*b*	*b*	*b*
0.107	60	288	99	30	84	99	*b*	*b*	*b*

a Reduced amount of water. *b* Failed with 0.67-mm. sphalerite, so not tried.

centrate between screen and hutch, and that this difference is greatest for par-interstitial sizes. Note that Table 50 shows differences in penetration of the bottom or separating layer while Tables 48 and 49 demonstrate penetrability of the top layer. Fig. 40 shows that with a long-range natural feed the par-interstitial grains have great difficulty in penetrating the bed, that the largest of the subinterstitial sizes get through reasonably well, but that when pulsion is sufficient to separate coarse concentrate, the finer subinterstitial grains largely go over the tailboard. (For further discussion of the effects of back water see *Length of stroke*.) Excessive cross water must be avoided, if tailing loss is to be kept down and the jig beds are to be kept in good condition. Where large amounts of back water are required to keep down suction, there will be excessive cross water on the later compartments unless special means are taken to rectify the condition. Water may be drawn off above the level of the bed. A long jig may be broken near the center and the feed dewatered between the two parts, but this involves lost head room and increased floor space.

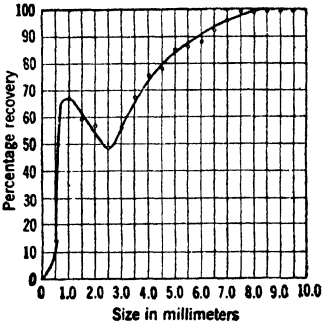

FIG. 40. Efficiency curve of a single-jig mill (*95 J 785*).

Thickness of separating layer is controlled on a jig with natural bed by varying the rate of concentrate draw from the screen; with ragging, by adding or taking out. The thicker the layer the higher its effective density, all other things being equal. Also the thicker the layer, the looser, in general, are the upper layers, unless speed is too high to permit the bottom layer to dilate properly. Hence an operator thickens a bed to raise grade of concentrate, or, with proper stroke conditions, to loosen the top and make penetration to the separating layer easier while at the same time increasing cross flow. (See also *Depth of bed*.)

Table 50. Effect of reduction of water on work of a fixed-sieve jig (*17 A 637*)

Product	>0.25-mm.		0.25~0.125-mm.		0.125~0.05-mm.		<0.05-mm.	
	Normal water	Reduced water	Normal water	Reduced water	Normal water	Reduced water	Normal water	Reduced water
	Percentages of total weight							
Hutch conc.	26	39	68	94	67	93	60	83

Feed rate must be decreased when other controls fail to lower tailing assay to the desired extent. The result is, of course, to give more time for heavy mineral to get through the roughing layer.

Length of stroke is directly dependent upon the number of strokes per minute, unless the latter are so few that there is an appreciable rest period between pulsations. In any case the length of stroke must be sufficient to produce a certain amount of dilation.

If the jig is running at relatively high speed, the length need not be so great as when low speed is used because of the greater velocity and hence greater lifting effect of the high-velocity current. For a similar reason length of stroke at a given speed need not be so great for light ores as for heavy ores. When the endeavor is to make clean concentrate, the bed should be maintained as compact as is compatible with the desired recovery by using a short and rapid stroke, and pulsion should be accented by

using a large amount of back water; on the other hand, when clean tailing is the desideratum, the bed should be kept loose by long, slow strokes and strong suction obtained by the use of little back water. A relatively short, rapid stroke with much back water is used for rich, heavy feed, while for low-grade feed, a long, slow stroke and little water are usual. Hence, a rougher jig requires a longer stroke, lower speed, and less back water than the corresponding cleaner. For separation of low-grade middling from tailing the usual practice is a long, slow stroke, shallow bed, and a small amount of back water. This adjustment also has the result of overcoming the bad effect of the large volume of cross water on the later compartments. In the WISCONSIN ZINC FIELD the operators test for the necessity of change in stroke by increasing the specific gravity of bed; if this raises the grade of concentrate, stroke length should be decreased.

With a given maximum size of particle, unsized feed requires a shorter stroke than sized feed because of the greater lifting effect of the water when the interstices of the bed are filled with fine material. Similarly a fine screen retains more fine material in the bed and shorter stroke can be used. High speed accompanies short stroke in order to maintain capacity. If a long stroke is used with unsized material, the bed is loosened so much that it boils and fine gangue is drawn down on the return stroke. If the bed becomes impoverished, there is a tendency to mat and choke the sieves, hence with low-grade feed, it is best to maintain a bed of coarse concentrate. Coarse feed requires a longer stroke than fine feed. Flat and thin pieces (floaters) require a short, rapid stroke, a thin, loose bed, and as little cross water as possible. Speed must be kept uniform or it will be impossible to hold a bed on the sieve.

In air-pulsated jigs the bed may be tightened by increasing the rate of pressure rise without changing speed or stroke length.

Screen (see p. 49).

Ragging. The constitution of the separating bed is not an operating variable with a feed of given characteristics when screen concentrate is being made. The most that can be done is to change the size range by change of screen aperture and amount of suction, thus controlling the amount and size of material drawn into the hutch.

When using ragging, size, size range, shape, and specific gravity are operating variables. Normally the ragging is of substantially the same specific gravity or slightly lighter than the concentrate. If the specific gravity is greater than that of the concentrate, excessive pulsion is required to produce movement. This results in boiling of the upper layers and increased tailing loss. A similar result follows if the ragging is too coarse or of too great uniformity of size. Ragging of low specific gravity tends to bank up against the tailboard; hence, unless special precautions are taken, such as inclining the screen against such flow or placing baffles across it at intervals, it is necessary to use a thin bed.

When jigging through the screen the interstices in the bed determine the size of grains that can pass and, in conjunction with other operating features, the strength of suction. Ragging about three or four times the diameter of the maximum grain it is desired to draw down is usually provided. Maximum suction is attained with maximum interstices; hence coarser and more uniform bedding is used on the later sieves, where clean tailing is sought and the grade of hutch product is of minor importance. If the valuable mineral of the ore abrades readily, ragging of more durable material of the same specific gravity is frequently used; thus iron balls or punchings or lead shot will form a satisfactory bed for making galena concentrate, pyrite or magnetite for chalcopyrite or blende, and feldspar for slate in coal jigging; steel shot is the usual bedding on jigs for washing alluvial gravel. On the later compartments of a jig ragging is usually middling of proper specific gravity, but artificial bedding is sometimes provided. At CALUMET & HECLA middling grains were used to bed finishing jigs treating the hutch products of primary jigs that bedded themselves. If the bedding grains are much heavier than the concentrate, as, for instance, when iron slugs are used as bedding for pyrite or blende, the bedding is not lifted on the pulsion stroke and merely serves to decrease the sieve openings.

An ore that makes a small percentage of concentrate requires a thick bed; a high-grade ore gives satisfactory results with a thin bed and heavy suction.

Feeding. The principal requirements are that the rate be regular and that the material be spread evenly over the entire width of the screen. Screen-concentrate draws respond slowly to increase in concentrate supply; hence a sudden increase in feed rate or metal content usually causes valuable mineral to pass over the tailboard; decrease will cause the discharge of low-grade material from the cup unless the draw is correspondingly altered. When making hutch concentrate only, sudden or large increase in feed rate causes increased tailing loss; decrease may cause some lowering of the grade of concentrate, but this will not be serious. Uneven distribution of feed puts the task of distribution on the jig, with consequent loss of capacity.

Capacity is determined by the solid-carrying ability of the cross current and the rapidity with which heavy mineral is dropped by the cross stream and absorbed or passed by the bottom layer. High capacity and high fluidity are concomitant. For discussion of limits see the preceding paragraphs on design and operation. Capacity of a given jig under given operating conditions is proportional to sieve area, with width the predominant dimension and length contributing rather to recovery. Usual figures for capacity estimates for ores, when two or three clean products are sought, are 0.5 to 2.0 tons per sq. ft. per 24 hr. for fixed-sieve types and 4 to 9.5 tons for movable sieves. Jigs operating to scalp out heavy concentrate in grinding circuits, and to rough out the small amounts of heavy mineral from alluvials, operate at much higher capacities (see Sec. 2).

Power depends upon sieve area, percentage of open space in the screen, speed, length of stroke, depth and weight of bed, and upon design of the jig box, as affecting the course of the water current between plunger and screen. *Wiard* gives the formula, Hp. = $AD^{1/2}/5{,}000$, where A is the sieve area in sq. in. and D is the diameter of feed in mm. For estimates, 0.1 to 0.15 hp. per sq. ft. of total sieve area is safe. Preceding articles give power consumed or installed for various types of jigs. Except in anthracite washeries it is an unimportant part of concentrate expense.

Experiments on a Harz-type jig (*32 ME 312*) in which the work required to overcome all mechanical and hydraulic resistances to flow of water through an empty screen of 1-mm. sheet punched with 2-mm. round holes with 1.5-mm. bridge, and having 32.7% opening, when jigging 15 kg. of ore sized 3~4.5-mm., indicated that at low speeds, insufficient to dilate a bed, work increases rapidly with increase of speed, and the proportion of total energy expended on moving ore exceeds that for other purposes. At higher speeds, sufficient to dilate the bed, screen resistance increases with speed, more rapidly than ore resistance, and screen resistance predominates, while bed resistance remains fairly constant, or may even diminish. Replacing the punched sheet by a woven-wire screen with 56.5% opening, and substituting 6~10 mm. ore, the total energy consumed by the jig was reduced 25%.

Water consumption varies with the size of feed, specific gravity of the minerals, depth of bed, size of screen aperture, frequency and length of stroke, and according to whether pulsion or suction is accented.

Three-compartment, 24×36-in. jigs treating 3-m. lead-zinc ore at DALY JUDGE used about 11,000 gal. per 24 hr. treating 75 to 90 tons. Two-compartment, 24×36-in. jigs at DOE RUN No. 3 mill treating classified feed used 30 g.p.m. each, treating 30 tons per 24 hr. At GENNAMARI a 4-compartment, 36×42-in. jig treating 15~4-mm. lead ore required 100 g.p.m. for 45 tons per shift. Jigging <3/8-in. blende, a 5-compartment, 30×42-in. jig required 150 to 200 g.p.m. Further data on water consumption of individual types of jig appear in preceding articles.

Cost of jigging ranges from 5¢ to 15¢ per ton jigged, according to the tonnage treated. The principal items of expense are labor, power, and water. The cost of operating jigs in grinding circuits is much less than the above minimum, since the jig imposes no appreciable additional burden on the grinding-mill operator, and power and water consumptions are low.

SHAKEN BEDS

Long-range semistationary beds formed by shaking are utilized on shaking tables and in gold pans. The characteristic quality of such a bed is what may be called REVERSE CLASSIFICATION, *i.e.*, an arrangement of the grains of the same specific gravity roughly into strata decreasing in size of grain from top to bottom of bed. Grains of mixed gravity arrange independently in this characteristic size distribution, but with the heavier particles of each particular size in equilibrium at a lower level than that of their lighter counterparts. There are, consequently, in such a bed, strata comprised of large grains of heavy mineral and smaller grains of light mineral.

The essential condition for formation of a shaken bed is movement of the support with sufficient vigor to dilate the mass, but sufficiently gentle to maintain all grains in substantial contact. The agitation may be substantially parallel to the plane of the bed, as on a shaking table or a shaking screen, or at right angles or a steep angle to the plane of the bed, as on a vibrating screen. But if the degree of agitation is such that the particles maintain substantial contact at all times, then any particular part of the bed offers transcendent viscous resistance to superinterstitial particles, while the resistance to par-interstitial and subinterstitial particles is relatively low. Hence the latter penetrate more or less readily. If the mechanical impulses act, as in the pan or shaking table, to cause movement of particles along lines lying more or less in planes parallel to the bed upper surface, and in so doing cause these to lose some of their contacts in such planes, the bed dilates more, and particles of superinterstitial size with respect to the particular level can penetrate downward. However, if such particles penetrate too far, they will be mechanically floated out of the fine zone, since on each substantially horizontal disturbance in that zone causing them to move, the resistance to any downward component of movement will average higher than that to upward movement, while as the mass settles to rest again, the finer particles will penetrate any openings below more readily than the coarser.

The fact that fine light mineral stratifies on a level with coarser heavy mineral in such a bed is conclusive evidence that composite density is not the prevailing element in effective density. It follows that plastic resistance *is* the prevailing property.

Penetration of this type of bed demonstrates that its effective density increases with decrease in bed-particle size and with increase in size of penetrating particle; for any given stratum it is substantially equal to the submerged density of its component particles against grains of its own size, but is lower for grains of smaller size.

It follows from the equilibrium arrangement of the long-range semistationary bed that it is distinctly less fluid, all other things being equal, than the short-range semistationary type. Otherwise fine-grain strata would be penetrated by coarser grains of solids of their own and higher gravities.

14. PAN; ROCKER

The pan and rocker are primitive apparatus used commercially only for hand or manual concentration of gravels containing minerals of high unit value, such as gold, diamonds, and tin. The pan is also used widely as a testing tool for concentrating any finely divided valuable material of relatively high specific gravity associated with waste of equal and larger sizes.

The gold pan (Fig. 41) is made of stiff sheet iron with the rim turned around a heavy iron wire for stiffness. Enameled-iron pans have the advantage of not rusting, but chip easily. Aluminum pans bend and dent too easily. Amalgamated-copper pans are sometimes used for cleaning up black-sand concentrate. The usual size is 15 to 18 in. diameter at the top, 2 to 2 1/2 in. deep, with the side inclined 30° to 80° to the bottom. *Wilson* recommends a 10-in. pan for prospecting. The weight is 1.5 to 2 lb. The inner surface should be smooth, and be kept free from grease and rust. Rust pitting helps save fine gold, but makes clean-ups more difficult. A pan will save particles varying considerably in size, but for best work the heavy particles should average smaller than the lighter waste.



FIG. 41. Gold pan.

Manipulation. See Sec. 19, Art. 22, for detailed procedure.

When panning gold gravel as a commercial operation, if there is much heavy sand present, it is best not to attempt complete separation with each pan, but to collect and later work up together the concentrate from many pans. In such work black sand (magnetic) may be removed (best dry) with a magnet and the gold, if amalgamable, may be collected with mercury, although this is not commonly done. Otherwise careful panning or blowing is necessary to make the final separation. In prospecting work when it is necessary to collect the gold from each pan separately, the quickest method of collection is to draw the colors into a head and then pick them out separately with a sharp-pointed metal or wooden tool. When there is a quantity of gold in the heavy sand, sizing in a series from 20- to 100-m. before attempting final separation is helpful (*20 IMM 197*).

Amalgamation in a pan is commonly practiced when panning down sluice concentrate. About 1 oz. mercury and 5 lb. concentrate are agitated in the pan under water until all visible gold is taken up, when the sands are panned away, taking care to hold back mercury and amalgam and to encourage it to run together. If much black sand is present, reduce the weight of concentrate panned.

Blowing is done by placing dried gold-bearing concentrate, preferably freed of magnetic material, on a sheet of paper or smooth metal about 2 ft. square, spreading to a layer one grain deep near one side of the supporting surface and then blowing across the grains toward the opposite edge with just enough force to move the lighter grains, which will then travel across the separating surface, leaving gold behind. Loss of some fine colors is to be expected.

Mechanism of concentration in a pan is, in a way, an epitome of gravity concentration, and as such worthy of careful examination.

(*a*) Assuming a gold-gravel feed, the first operation is a rough concentration by SIZING, in which eye and hands substitute for a screen, and the products are coarse concentrate and a finer middling (see the screening operation in gold dredging, Sec. 2, Art. 21).

(*b*) The second step, SUSPENSION, involves formation of a relatively loose bed by a form of rotary agitation in which, progressively, different layers of the bed from the top down, initially left roughly in place relative to the earth during the swirling movement by their inertia, are subjected to an action similar to that which a washboard in horizontal position, supporting a layer of baseballs, exerts on the layer when it is moved horizontally. It is not the action of the water that causes the suspension; this is attested by the fact that the fine gravel can be suspended dry by a pan similarly swirled when resting on a table top.

(*c*) STRATIFICATION. Heavy grains settle through the bed because their weight overcomes the effective density of the bed (Art. 2). There is a certain amount of reverse classification in the bed also, although this is not so pronounced with water present as with dry panning.

(*d*) Washing down the surface layer of settled solids to the toe brings scour into play with resulting FILM SIZING (Art. 32) over a somewhat roughened surface. The coarser particles roll over such a surface the more readily, just as a bicycle rolls more readily across a rutted road than does a more lightly loaded roller skate. Hence the first tailing is relatively coarse, while subsequent tailings, obtained by repetition, are progressively finer.

(*e*) The final pan step comprises floating a rich tailing out of a heavy bed, the latter being formed as was the lighter early bed in (*b*).

(*f*) The float product of (*e*) is streamed over the relatively rough settled surface of the remaining rough concentrate and the sink is streamed on the smooth surface of the pan.

Flowsheet of the pan is shown in Fig. 42.

Capacity. The charge for a pan 16 to 18 in. diameter is from 15 to 30 lb. of ordinary gold gravel. Such material averages about 135 lb. per cu. ft; hence 243 @ 15-lb. pan loads = 1 cyd. A skillful worker can pan 100 charges in 10 hr.; gravel containing many boulders works more rapidly, and fine or cemented gravel at about 75% of the rate stated.

A pan in the hands of a skilled operator will make a lower grade of tailing on any ore amenable to gravity concentration than can be made in the most elaborate gravity mill. Concentrate will not, however, be of as high grade as can be made in a mill.

Batea; Battel (Fig. 43) is an equivalent of the pan, used in Central and South America and in certain Asiatic countries. It is usually made of wood, less frequently of sheet iron. It is claimed that the wooden surface is superior to iron for catching and holding fine gold. *Bowie* states that Honduras mahogany is the best wood. The usual size for prospecting work is from 15 to 20 in. diameter with an angle of 150° to 155° at the apex of the cone, making the depth at the center from 1 5/8 to 2 1/2 in. Bateas 30 to 36 in. diameter are used in diamond washing in Brazil and in washing tin gravels in the Dutch East Indies. Load runs about 170 per cyd. (*56 MM 218*).



FIG. 43. Batea.

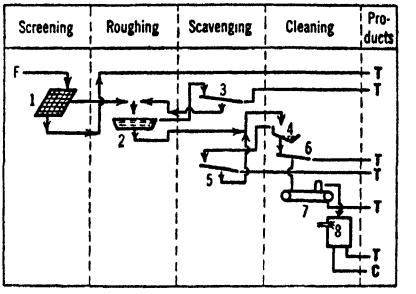

FIG. 42. Flowsheet of a pan.

1. Sizing by hand (or screen).
2. A bed of low effective density.
3. A rough-surface strake.
4. A bed of high effective density.
5. A medium-surface strake.
6. A smooth strake.
7. Magnet.
8. Blowing.

Mechanical pan is built for large-scale prospecting on a limited area and for clean-up of large-scale placer operations. It comprises an assembly of four superimposed nested cylindrical units (24-in. diam.) held together by clamp bolts and mounted on a horizontal gyrating base driven by a 3/4-hp. motor (gasoline, Diesel, or electric). The top unit is a 2-deck screen; the lower are, in order downward, shallow pans discharging, one to the next, at such points as to cause feed to flow across the full surface, aided by a slight tilt of the pan bottom. The lower screen is usually 10-m.; the upper is a scalper. The top pan is bare copper if amalgamation is desirable, otherwise sheet steel like the lower; the lower pans are floored with matting (rubber, heavy canvas, or thin coco) held down by coarse wire screen. The clamp bolts, with wing nuts, are hinged to lugs on the gyrating base and swing up to engage open lugs on the screen box. Height to top of feed hopper is about 30 in. Water consumption is said to be 1 to 2 parts by weight per part of gravel; capacity, 1 1/2 cyd. of easy gravel per hr. Shipping weight is 500 lb.

Dry panning. See Art. 38.

Rocker (Fig. 44) is used in the same kind of service as the pan, but has somewhat greater capacity. Rockers are of many designs and sizes but all consist essentially of a screen box (*a*) for rejecting coarse pebbles, an inclined apron (*b*) serving the double purpose of transporting undersize to the head of the rocker trough and of catching gold, and an inclined riffled trough (*c*) with flaring sides; all mounted on two rockers (*d*). The screen box may be provided with a handle (*e*) which serves both as an aid in lifting out and a grip for the operator in rocking, or the rocking stick may be longer and attached to the side of the trough near the head end. The SCREEN BOX ranges from about 12 × 12 in. in small prospecting rockers to 20 × 24 in. in large working rockers, and is 6 to 8 in. deep. It is sometimes made with a low side at the head end and the bottom inclined slightly toward the low side, in order to effect continuous discharge of oversize. The screen is occasionally a grizzly, but better perforated steel plate, 10 to 18 gage, according to the service. The screen aperture depends to some extent on the character of the gravel; it varies between 1/4 and 3/4 in., normally is about 1/2 in. Percentage of opening should be as great as possible. The APRON is normally made of canvas tacked onto the frame in such a way as to leave a slight belly. Rubber sheeting backed with canvas (*93 J 1266; Peele 10–538*) and galvanized iron have been used. The slope of the apron is from 1.5 in. per ft. upward. The TROUGH proper is usually between 12 and 18 in. wide at the bottom and 3 to 6 ft. long, with slightly flaring sides from 1 to 2 ft. high at the deepest part. The bottom piece should be clear, soft lumber that will not shred or "rough-up" when wet, under the action of the gravel. The slope of the trough ranges from 0.5 to 1.5 in. per ft.; it can be varied as desired by blocking the assembly, but the slope of the apron changes reversely. RIFFLE CLEATS of wood 1/2 × 1/2-in. to 1 × 1-in. are placed on the bottom of the trough and held down by strips nailed to the sides. The arrangement varies. Usually all are transverse but occasionally the upper half of the trough is riffled longitudinally. Canvas, corduroy, burlap, or blanket is sometimes used to cover the bottom. *Janin* recommends burlap as

both most effective and most easily available. The fabric may be covered with riffles made of expanded-metal lath. The TAILPIECE at the lower end of the trough is usually between 3/4 and 1 3/4 in. high at the center and from 1 to 3 in. higher at edges. It serves to hold a bed in the trough. The ROCKERS should have no more curve than is necessary to effect distinct agitation of the material in the machine; more makes the labor of rocking unduly fatiguing without any corresponding gain in concentrating efficiency. Dressed 1-in. lumber is heavy enough. The joints should be tight. Warping may be prevented by light tierods and the use of light-weight metal corner straps. See also *Janin, p. 36.*

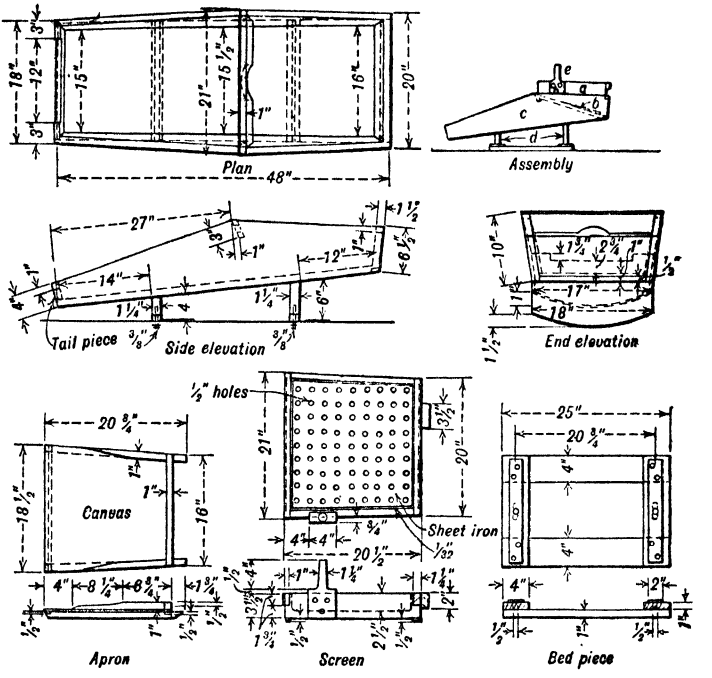

FIG. 44. Rocker.

Manipulation. Material is shoveled into the screen hopper and washed by means of water, preferably clean, poured in from a dipper. At the same time it is forked over and disintegrated and coarse clean boulders are thrown out. More water is then added slowly and the machine is rocked in such a way as to cause material to progress along the floor of the trough, to loosen the bed at each stroke, and to maintain even transverse distribution of the solids. *Wilson* states that one swing should be sharper than the other, to effect stratification, or even that a bumping block may be used, but either procedure will cause heaping of solids and concentrate at one side of the trough with consequent difficulty in manipulation and loss of values. When the deposit of gold has worked down to near the tailpiece, or sooner if the exigencies of the operation demand, a clean-up is made. The material behind the tailpiece is shoveled out, the screen is then carefully washed and removed, the apron lifted out, and the contents washed carefully into a pan for re-concentration. The riffles are taken out and carefully washed and the deposit in the trough is then washed on the plane bottom by streaming as described in Art. 32. Final clean-up is usually made in a pan.

The longitudinal progress of tailing depends upon slope, shake, and wash water. Slope should be adjusted so that satisfactory longitudinal progress is effected with minimum consumption of water and energy and so that sand does not pack behind the tailboard and in the riffles. Slope must be steeper for a gravel containing much fine sand than for one of more pebbly character; likewise if much heavy sand (black sand) is present a steeper slope is necessary than otherwise. If gold is fine, the bed must be loose; hence a relatively steep slope is required.

Capacity varies with size. Purington (*Bul. 263, USGS*) gives 3 to 5 cyd. per 10-hr. day for 2 men working steadily, one feeding and removing boulders and tailing, the other rocking and washing. *Van Wagenen* gives 3 cyd. per 10 hr. per man in ordinary gravel and 2 cyd. in cemented gravel. Capacity is less in prospecting work on account of more frequent clean-ups.

Water consumption varies widely, but from 50 to 100 g.p. cyd. treated is sufficient if the gravel is not too fine, slope sufficient, and water is used sparingly. Water may be reclaimed in pools, if conditions are right; connecting pools aid clarification.

Applicability. A rocker catches coarse gold readily but will lose much fine gold. The loss will be greater with clayey or cemented gravel or if muddy water is used. In some cases quicksilver placed in the riffles will aid in catching fine gold, but since the loss occurs rather through failure to effect settlement of the gold than by washing it out of the riffles, this expedient is rarely successful. The rocker is rarely used except in sampling when a device of greater capacity than the pan is needed, and in cleaning up concentrate from sluices and gold tables.

North Carolina rocker consists of a semicylindrical trough, closed at both ends, with two longitudinal riffle cleats near the bottom. The charge with water is first rocked gently to effect stratification, then the apparatus is rocked differentially in such a way as to throw waste over the rim and leave the gold and heavy sands between the riffle cleats. Clean-up is made in a pan.

Mechanical rocker (*116 J 334*) driven by crank from a water wheel has been used to treat ordinary gravel at the rate of 5 cyd. per 8 hr. The trough was 14 in. × 12 ft.; the screen hopper sloped in the opposite direction from the trough and discharged oversize of a 0.5-in. screen automatically over a riffle. A power rocker (*IC 6736*) 49 in. long, 27 in. wide at top and 21 in. at bottom, with 5/8-in. screen, 3 aprons sloping 3 in. per ft. and covered with canvas under 1/2×1/4-in. riffles, rocked 40 @ 6-in. s.p.m. by a small gasoline engine, treated from 1 to 3 cyd. per hr. according to the clay content of the gravel, with 2 men working.

More finished forms of mechanical rockers have been manufactured by several of the mining machinery houses. A typical form comprises a small wash trommel, a transversely shaken riffled trough, and a small flight conveyor, mounted on a light frame on a plank base and driven by a 1-hp. gasoline engine. The trommel is 12 to 16 in. diam. by 30 to 36 in. long, with a feed hopper for shoveling in about 4 1/2 ft. above the ground; it is provided with angle lifters for light scrubbing; trommel oversize by spout, and fine gravel and coarser sand by conveyor, discharge at the other end at a height of about 36 in. Small rectangular tanks standing on the plank floor provide for some clarification of water. A small centrifugal pump, taking suction on the clear-water tank, delivers to a spray on the inside of the trommel and to the back of the feed hopper. The riffles are molded onto a flexible rubber trough which fits removably into the rocker frame; the latter is shaken 200 times per min. Rated capacity on easy gravel is 2 1/2 cyd. per hr. Dimensions, set up, are 54 in. (high) × 70 (wide) × 84; uncrated weight, 600 lb.

SHAKING TABLES

Introduction. Modern shaking tables are concentrating devices that consist of substantially plane surfaces, inclined slightly from the horizontal, shaken with a differential movement in the direction of the long axis, and washed at right angles to the direction of motion by a stream of water. The earliest form of shaking table was shaken in the direction of the slope, causing the heavy material to climb against the flow of pulp. Salzburg, Schemnitz, Halley, and Gilpin County tables for heavy ores were of this class. All are now obsolete. The simplest and earliest form of typical side-slope table is the Rittinger bumping table (*Ed. 1*). The separating action of a side-slope table is shown diagrammatically in Fig. 45; *A* is the feed side, *B* the concentrate end, *E* the tailing side, and *D* the head-motion end. The deck tilts as indicated by the arrow, is reciprocated at right angles to this slope by means of pulley *P*, eccentric *X*, and the flexible connecting rod *R*, and is stopped suddenly at the end of the forward stroke by the bumping block *G*. Feed is introduced at *F*, slime flows directly down slope and leaves at *S*, granular material is moved toward *C* by the bumping action and is washed by water introduced at *W*. Tailing discharges at *T*, middling at *M*, and concentrate at *C*. In modern types of shaking tables longitudinal cleats are fastened to the upper surface of the table deck, or riffles are cut into the surface, the resulting riffles in either case being arranged variously. Some makers build the deck in two or more planes slightly inclined to each other. Decks of different makes differ in outline from the rectangular form, and head motions and methods of deck suspension have been greatly improved over the original Rittinger model. With a smooth-surfaced table such as the Rittinger the maximum size of feed that can be treated efficiently is 1 mm. For years the maximum size of feed treated on riffled tables was 2.5 mm. and in most mills it was less than this. With some of the present methods of riffling, however, base-metal ores are treated as coarse as 1/4- to 3/8-in., and coal as coarse as 2 1/4-in. has been handled successfully.

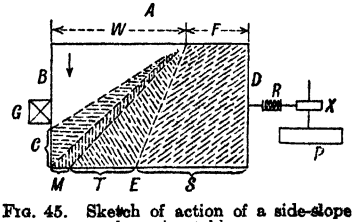

FIG. 45. Sketch of action of a side-slope bumping table.

15. PRINCIPLES OF SHAKING-TABLE ACTION

Separating action. As feed comes onto the table, its transverse down-slope flow is stopped by the riffling and it is held in a series of parallel longitudinal troughs. Shaking does the same thing to the bed thus formed as swirling does to the feed in a pan (Art. 14),

and reverse classification and stratification according to specific gravity occur simultaneously, with the result that the pulp is soon arranged roughly as in Fig. 46, item *b*. Each specific-gravity species is arranged in a vertical column graduated as to size; all columns terminate with the finest sand sizes on a common base (the deck), and extend upward a greater or smaller distance toward the top of the supporting riffle cleat, the column of lightest material being the longest.

The beds as a whole, concurrently with their formation, move in the riffle troughs from the mechanism end (*D*, Fig. 45) toward the concentrate end *B*, under the impulse of the uneven shaking motion. The more direct and consequently greater frictional drag on the lower layers causes them to move the faster; the difference in longitudinal movement of the different layers in a given cycle is what causes dilation (see Art. 14).

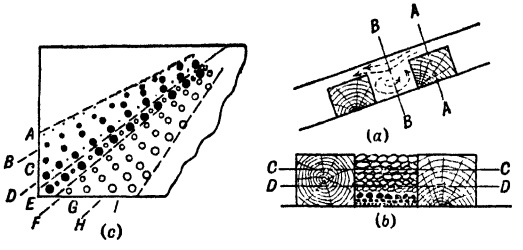

FIG. 46. Action of material on a riffled shaking table.

The height of the riffles decreases from *D* toward *B*. Hence as each transverse section of bed moves along, its upper layers successively lose the support of the cleats, and the transverse stream of water shears them off and rolls them down slope toward side *E* (Fig. 45).

The forward ends of the riffle cleats terminate (usually) on a diagonal line corresponding in position substantially to the line between clear and shaded areas in Fig. 45. Upon reaching this line the material remaining in the riffle troughs, consisting now of only the lower strata of the original beds, is subjected on the smooth inclined plane of the deck to film sizing by the cross water (Art. 32). As a result the larger particles of a given specific gravity wash down the more rapidly, as do the lighter particles of a given size range.

Thus at any given moment the horizontal distribution of the surface grains on the table deck near the line of termination of the riffles is as shown in Fig. 46, item *c*, with the smallest heavy grains, which resist transverse washing most effectively, forming line *A;* the largest heavy grains, which are readily rolled by the water, mixed with the fine light sands, along the band *D–F;* and the larger light grains, which were first robbed of their support, reaching the tailing side in the band *F–I*.

During the time that the beds are in the riffle troughs, the impregnating water is subject, along the line of the riffle tops, to the drag of the water stream flowing transversely over the top (Fig. 46, item *a*). The effect is to set up eddies as indicated in the figure. These wash out subinterstitial grains (SLIMES), which flow along thereafter in suspension in the stream and discharge in the band *S*, Fig. 45.

Thus the shaking table is essentially a continuous mechanical pan in which the shake has the primary function of dilation of the bed, and the secondary function of moving the successively diminished remnants of the original bed to those portions of the table deck on which the actions of the pan, therein occurring in a time sequence, take place simultaneously. It should be noted also that here, as in other shaken-bed apparatus, the stratification in the bed is, in itself, the first step in concentration, and that action in shaking beds differs therein from that in pulsating beds, where feed is presented to preformed separating layers which are statistically permanent.

The idealized arrangement of Fig. 46, item *c*, is modified considerably by the character of the riffling; irregularities in deck surface, motion, and water supply; differences in shape of grains of the same mineral and size; and by the presence of middling grains.

Feed. It follows from the discussion of table action that in order to treat particles on a shaking table they must settle out of the cross stream of feed water at a sufficiently rapid rate to form beds in the riffles at the feed corner; they must have a sufficient size range to permit distinct reverse classification, but not so great a range that the water currents necessary to scour out tailing on the cleaning plane (unriffled portion) will carry concentrate too far down slope. This allowable range is greater the larger the concentration criterion.

Richards (*38 A 556*) found in treating natural feeds of artificial quartz-galena mixtures on a Wilfley table that with <2-mm. feed there was marked retention of quartz between 0.7-mm. and 0.15-mm. sizes in the concentrate, while but little quartz of coarser and finer sizes was retained. With this same feed galena appeared in the tailing in amounts exceeding 1% at 0.2-mm. and the amount rose to 17.5% in the <0.08-mm. size. The slime from this run all passed 0.45-mm. and assayed 18.9% galena; there was no galena in the slime >0.36-mm., but 10% appeared in the >0.28-mm. size. Middling amounted to 21.5% of the total feed. The coarsest sizes assayed 75% galena and there was gradual diminution to a minimum of 3.68% at >0.20-mm., with a marked increase to 32.23% at >0.08-mm., and further

increase to 90.5% in the <0.08-mm. size. In treating <1-mm., < 0.5-mm. and <0.25-mm. feeds the results were similar except that the grade of total concentrate increased with increasing fineness, corresponding to decreased retention of intermediate-sized quartz; grade of tailing correspondingly increased, with accompanying decrease in grade of middling and slime. In every test maximum retention of quartz occurred at a size range beginning at between one-quarter and one-third that of the largest grain in the feed. The data are summarized in Fig. 47.

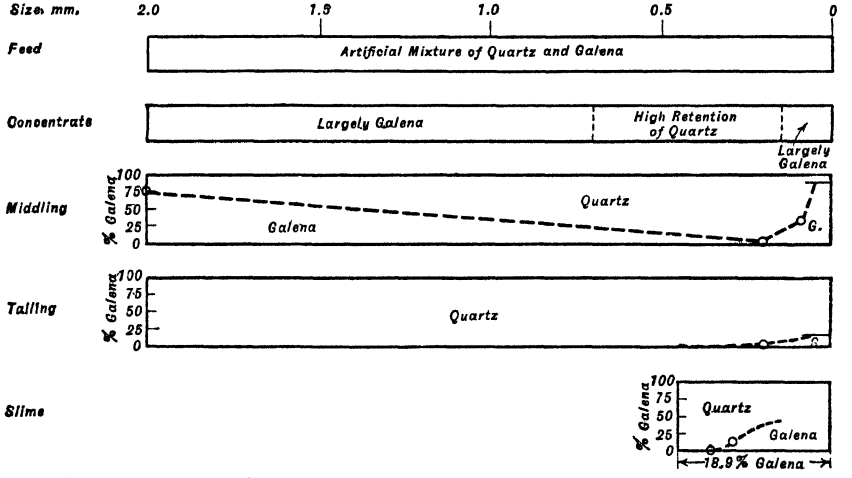

FIG. 47. Size-composition analysis of the products of a Wilfley table (*after Richards*).

The general distribution of minerals and sizes shown in Fig. 47 could have been predicted from Fig. 46, item *c*, but Fig. 47 points out significant sizes and size ratios that must be borne in mind in using shaking tables.

(1) Slime losses are unavoidably high. The table may be used as a slime separator but not as a saver for slime-size mineral, even when this is as heavy as galena; much of this mineral which drops into the riffles from the slime band is washed out with the tailing, and a large amount is carried into the middling as riffle support disappears.

(2) Fine gangue cannot be scoured from a roughened concentrate surface with an amount of cross water that will fail to roll coarse concentrate. Thus the figure shows that even with enough cross water (and slope) to put much coarse galena into the middling there was still high retention of fine quartz in concentrate.

(3) The tests on finer feeds show the same general distributions, so that they can be portrayed simply by moving the limiting size-scale point to that occupied in Fig. 47 by 2.0, and extending the intermediate scale proportionately. But with finer feeds less cross wash is necessary; the surface of concentrate is smoother, hence less fine gangue is retained and less fine heavy mineral is washed into middling; more heavy mineral deposits in the riffles from the slime and the assay of slime falls; but some of this deposited heavy mineral washes into tailing, the assay of which may, therefore, rise.

(4) Feed should be slime-free except as the table is purposely used as a deslimer. It should not be so coarse that excessive cross water is necessary to wash gangue off from the resulting coarse heavy-mineral layer on the cleaning plane. The size range should be short enough to eliminate the band of high gangue retention in concentrate.

(5) Since fine heavy mineral can be held up in concentrate under conditions that wash down coarse gangue, a classified feed is desirable. The same cross-wash conditions put much coarse galena in middling, hence a very short-range feed is undesirable.

Desliming of feed is an aid to recovery in the operation of all concentrators operating with fine-sand beds. The reason would appear to be that the suspended slime has the effect of increasing the density of the interparticle medium, causing it to suspend and carry fine values for a longer time than the machine time-factor. This effect was demonstrated quite definitely at BUNKER HILL AND SULLIVAN (*IC 6314*) where desliming of feed to Frue vanners (Art. 24) increased capacity tenfold, raised grade of concentrate from 55 to 69% Pb, and lowered tailing from 3.3 to 0.7% Pb. Desliming involved discard of 14% of the weight of the feed, carrying 15% of the total lead, and assaying 7.44% Pb, but over-all recovery was thereby increased from 55% on total feed to 76.9%. Similar effects have been noted in operation of shaking tables and gold tables.

TYPES OF SHAKING TABLES

Tables are called sand or slime tables according to the size of material that they treat, and are classified as roughing or finishing tables according to the character of the service. Sand tables usually have relatively deep riffles, over a majority of the surface at least, and

the space between cleats is usually not more than 3/4 in. to 1 1/4 in.; slime tables are not riffled so deeply, and the space between cleats is usually much wider than on sand tables in order to form pools of relatively quiescent pulp to induce settlement of solids. Slime tables always have a portion of the deck unriffled. But any sand table that has an unriffled portion may be used for slime, and slime tables may be used for sands, if the settling pools are not too large. Roughing tables are usually riffled full length (Fig. 52, item c) and the riffles are comparatively deep. These tables are thus enabled to treat large tonnages and yet save fine mineral with the coarse in the form of a low-grade concentrate, at the same time rejecting an impoverished tailing. Finishing tables, with a few exceptions, have an unriffled portion for cleaning out fine gangue from the concentrate streak; the riffles are shallower than on roughing tables, and, in general, less resistance is offered to cross travel of solids than on a rougher. While in some mills the same table with different operating adjustments is used for both roughing and cleaning, this is not, in general, good practice, and it is doubtful whether superior efficiency can be demonstrated for it in any case. Such practice has the advantage of lessening the stock of repair parts that must be carried, with consequent economy, but such saving will rarely compensate for the losses or reduced capacity incident to misuse of tables.

16. WILFLEY TABLE

Description. The Wilfley table (Fig. 48) is a side-slope shaking table riffled over somewhat more than half the surface, the riffles on the original type (Fig. 52, item *a*) terminating along a diagonal line extending from the forward end of the feed box to the corner between tailing side and concentrate end.

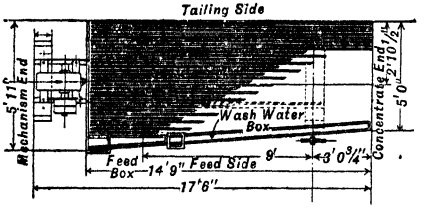

FIG. 48. Wilfley table (No. 6; right-hand).

Construction. Fig. 48 gives dimensions of the standard Nos. 6, 11-D, and 14 tables, all alike except for foundations, as noted below. Top of the feed box stands 3 ft. 3 in. above floor when the table is level, 6 in. higher when tilted to maximum slope. The deck is built of redwood strips laid flat at 45° to the axes of three longitudinal beams of pressed steel, wood-filled, and four additional longitudinal members. The whole is carried on two transverse steel trusses, each with two slipper bearings which rest in supporting bearings on the frame.

FOUNDATION is of steel, wood, or concrete. The steel base of No. 6 table consists of two 12-in. channels 15 ft. long, spaced about 24 in. apart by cast-iron separators. They carry two circular machined seats in which rest cast-iron bolster yokes with suitably machined surfaces. The yokes carry cross members built up of 3-in. channels. In No. 14 table, a 12×16-in. timber replaces the longitudinal channels, and pressed steel is used for the cross members. Table No. 11-D is mounted on two concrete piers (with a third pier for the head motion), which saves about 30% in shipping weight as compared with No. 6. The seats for the slipper bearings of the deck are bolted to the transverse deck-frame members. As shown in Fig. 49, the upper ends of the rockers are curved to the radius of their oscillation, whence the motion of the deck is rectilinear. TRANSVERSE TILTING is effected by power screws engaging bronze tilting nuts in the bolster yokes and actuated by suitable gearing from a hand wheel located at the feed side near the concentrate end. A permanent longitudinal tilt upward toward the concentrate end, ranging from 3/8 in. to 1 1/4 in. in the length of the table, is provided for; the normal tilt is between 3/8 and 5/8 in. When the longitudinal tilt is too steep, concentrate may refuse to climb and may pack in the riffles. *Richards* cites an experience with two-mineral separation in which the lead content of zinc concentrate changed from 2 to 8% with change in longitudinal tilt from 5/8 in. to 3/8 in.

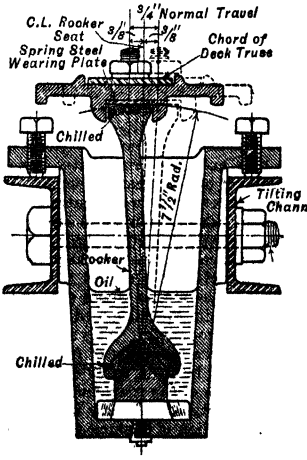

FIG. 49. Deck-support rocker for Wilfley table.

HEAD MOTION is of the pitman-and-toggle type illustrated in outline in Fig. 50. The essential parts are the pitman *a*, pulley-driven eccentric *b*, toggles *c*, and yoke *d*. The forward toggle abuts against a fixed block *e*, and lost motion is prevented by compression in spring *f* between the yoke and the fixed block *g*. The yoke is attached to the table deck by rod *h*. In the modern, enclosed, self-oiling head motions, the yoke *d* is composed of two cast-steel ends, connected by two steel rods, the latter passing through bronze bushings in the wall of the housing. Horizontal movement of the outer end of the

right-hand toggle for a given vertical displacement of the inner end is greatest when the divergence of the toggles from a straight line is a maximum, which is at the end of the forward stroke; it is least when the divergence is minimum, and this is at the end of the backward stroke. Hence with uniform rotation of the drive pulley the deck velocity increases from the beginning of the forward stroke to a maximum at the end of the stroke while the return stroke starts at maximum velocity and decelerates until the end. The backward stroke is effected entirely by the toggles, acting against the spring pressure and the inertia of the moving parts; the forward stroke is effected by the spring, but the spring tension is set to prevent lost motion so that the velocity of the forward stroke is controlled by the toggles. Graphical analysis of the motion is shown in Fig. 51, positions 1 to 8 inclusive being those occupied at eight equally spaced moments of time in one revolution of the drive pulley. In the graph (Fig. 51, *c*) the slope of the tangent to the curve at any point is a measure of the velocity at that point and the curve clearly shows acceleration from 1 to 5, representing the forward stroke of the table, and deceleration from 5 to 1. To ADJUST THE SPRING properly, loosen until a slight knock is heard then tighten just enough to remove the knock. Further tightening increases wear and power consumption and may cause spring breakage. LENGTH OF STROKE and, to some extent, the SHARPNESS thereof, are controlled by vertical adjustment of the fixed toggle block *e* which is lowered to lengthen and sharpen the stroke and raised to shorten it. The usual range of STROKE and SPEED is 1/2 in. @ 300 r.p.m. for fine, and 3/4 in. @ 260 to 280 r.p.m. for 20- to 65-m. feed. Maximum length of stroke on the standard table, 1 in.; maximum range of speed, with independent 1.5-hp. motor, 220 to 350 r.p.m., adjusted by vari-pitch V-belt sheave manipulated by hand wheel.

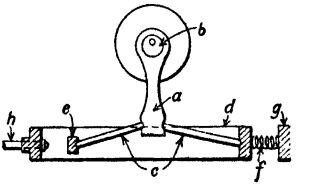

FIG. 50. Diagram of Wilfley-table head motion.

COVER is rubber when delivered by the manufacturer, and this is now the preferred covering, having many times the life of the formerly standard linoleum. The rubber should contain enough zinc oxide filler (*e.g.* 39%) to prevent absorption of water; rubber with 2 to 3% ZnO was found unsatisfactory (*IC 6658*). Pyroxylin-covered fabric (Mine-Fab), cement, and glass have been used. One of the S.E. Missouri lead mills found cement surface unsatisfactory because unavoidable seepage of water warped the wood floor of the deck.

Riffles are usually formed on linoleum and similar surfaces by tacking on wooden cleats, but the riffle may be grooved into lineoleum or cast into glass or rubber. Softwood (sugar pine) attached

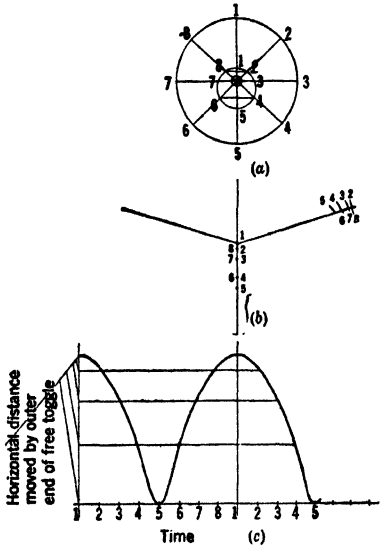

FIG. 51. Analysis of motion of Wilfley table.

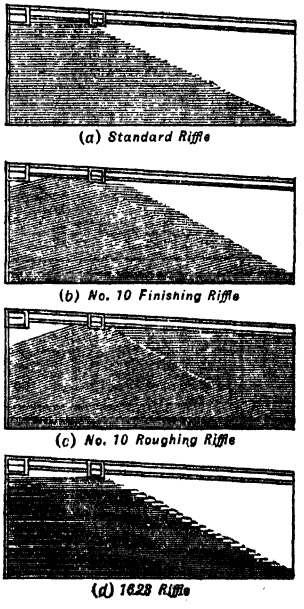

FIG. 52. Rifflings for Wilfley tables.

riffles are usually used in finishing service, maple or oak in roughing service or with coarse abrasive feed. Riffles have been made by bending 16-gage galvanized iron into unequal-leg angle sections, using the short side as the riffle cleat and the long for the bottom of the riffle (*112 J 180*). These increased the capacity of a No. 9 Wilfley 25%, the cost of laying was 20% less than for wooden cleats, and on the basis of the usual local average life of 5,000 tons for soft-pine riffles the respective costs per ton of feed were $0.015 for wood and $0.008 for iron. STANDARD RIFFLING on a Wilfley table (Fig. 52,

Table 51. Performances of Wilfley tables

Mill	Kind of ore	Size of feed, mm.	Covering	Riffle cleats	Speed, s.p.m.	Length of stroke, in.	Tons per 24 hr.
Timber Butte *b*	Zinc *a*	2.5~0	Linoleum	Special	243		100
Butte and Superior	Zinc *a*	*c*	Linoleum	Maple	257	7/8	25
American Zinc, Lead & Smelting Co	Zinc	< 20-m. deslimed	Linoleum	Poplar	275	3/4	14
Connecticut Zinc Co	Zinc	Fine sand					21.5
Sunnyside M. & M. Co	Zinc-lead	Flot'n conc	Linoleum	Sugar pine	240	1/2–3/4	
New Jersey Zinc, Ogdensburg	Zinc *f*	*h*	Linoleum	Sugar pine	@ 260	3/4	6–8
New Jersey Zinc, Franklin	Zinc *f*	*i*	Linoleum	Sugar pine	254	3/4	6–12
Federal Mining & Smelting, Morning	Lead	*l*	Linoleum and Fabrikoid	Pine	@ 240 *j*	1/2–7/8	10–20
Federal Lead Co	Lead	*m*	Linoleum	Wood	275	3/4–7/8	Av. 30
St. Joseph Lead Co., Rivermines	Lead	All < 2-mm., 12% < 48-m	Concrete	Oak	250	1	45
Calumet & Hecla	Native copper	< 28-m., 40% < 200-m	Linoleum	Wood	240	5/8–7/8	15–25
Chino Copper Co	Chalcocite and chalcopyrite	*s*	Linoleum	Sugar pine	248	3/4–1	40–75
Porphyry copper ore	"				245	3/4	45
	"	5-mm.					172
Cananea Consolidated Copper Co	"	*s*	Linoleum	Pine	250	1 1/8	14
Phelps Dodge, Moctezuma	"	*s*	C. I. plates and linoleum	C. I. plates and oak	250	1	200
Phelps Dodge, Moctezuma	"	*p*	Linoleum	Oak	250	7/8–3/4	20–50
Tonopah-Belmont (*52 A 114*)	Pyrite and gold in siliceous gangue	*r*	Canvas	Wood	233	5/8	25–30
Alaska-Gastineau	"		Linoleum	Sugar pine	254	7/8	30
Liberty Bell	"	10~40-m.	Linoleum	Wood	240	7/8–1/2	*q*
Belmont-Surf Inlet	"	*n*	Linoleum	Wood	260	3/4	60 *g*
Melones Mining Co	"	< 20-m.		Pine	250	5/8	30
U. S. S. R. & M. Co., Midvale	Complex		Linoleum	Maple	247	5/8–3/4	*o*
Tungsten Mines Co	Tungsten		Linoleum, 1/8 in		260	3/4	20
Tungsten Mines Co	Tungsten		Linoleum, 1/8 in		230	1 3/16	30

a Blende in granite.

b Tables made a lead-zinc-iron-copper middling, silica-free, that was carefully finished on other tables; circulated a zinc-silica middling without regrinding, and separated slime for flotation without dilution. The operation was performed at high capacity and low cost.

c Garfield-table concentrate.

d Includes transmission.

e Installed.

f Willemite and zincite from granitic rock.

g 2-deck.

h Classified; <1-mm.

i Classified; all <1.65-mm.

j Varies with size of feed.

k Also attends 4 drag and 7 hydraulic classifiers feeding tables.

l Classified; all <20-m. Practically all <30-m. carefully deslimed.

m See Table 60*a*. All <10-m.

Table 51. Performances of Wilfley tables—*Continued*

Mill	Per cent. water in feed	Wash water, g.p.m.	Horse-power	Assays, per cent.				Attend-ance, machines per man	Recovery, per cent.
				Feed	Tailing	Concentrate	Middling		
Timber Butte *b*						49–51			25–30
Butte and Superior			0.75					10	
American Zinc, Lead & Smelting Co	73	10	1 *d*	5.5	0.5	59.5	8	44	
Connecticut Zinc Co				3.81	2.10	58.20	7.72		
Sunnyside M. & M. Co		5.5–7	1.31 *e*					11	
New Jersey Zinc, Ogdensburg	75	5.6	0.5					20	
New Jersey Zinc, Franklin	75	10	0.5					12	
Federal Mining & Smelting, Morning	70	8.3	0.75	6	1	55	4	30 *k*	
Federal Lead Co	53	7–8						20	
St. Joseph Lead Co., Rivermines	50	15	0.75	5	0.4	72	5	40	
Calumet & Hecla		5.6	0.5–0.75			30–60		60–135	Av. 50
Chino Copper Co	50	8	1		1.75	14	6.56	35	
Porphyry copper ore	70	3.6	0.75	3.5	1.10	22		24	72.1
				1.29	0.99	13.6			25.1
Cananea Consolidated Copper Co	80	3.5		*t*	*t*	*t*	*t*	30	
Phelps Dodge, Moctezuma	50	40	1	3	1.6	10–11		7	
Phelps Dodge, Moctezuma	50–70	30	0.75	1.5	0.5	13–14		20	
Tonopah-Belmont (*52 A 114*)	79	5	0.59			1.6 oz. Ag and Au 30 Fe, 31 insol.		16+	11.5
Alaska-Gastineau	50.7	6	0.56					80	
Liberty Bell	*q*		0.5	Au 0.8 Ag 27.1	0.6 24.2	1.6 oz. 250 oz.		33	
Belmont-Surf Inlet	67							6	
Melones Mining Co	86	1.50	1.5	$2	$0.75	$35	$1.20	24	
U. S. S. R. & M. Co., Midvale	60–80	9–19	0.75	*u*	*u*	*u*	*u*	20	
Tungsten Mines Co	78	13	0.75	0.5 WO_3	0.10–0.14	60			
Tungsten Mines Co	78	10.3	0.75	2.0	0.2	62			

n All <1/8-in. trommel after ball mill.

o Single-deck, 35 tons per 24 hr. of 10-m. sands to 10 tons >100-m. sands; 2-deck, 50 tons >10-m. sands and 15 tons >100-m.

p 2-mm.~150-m. classified.

q 50 tons per 24 hr. on 4 : 1 feed and 40 on 5 : 1, both tube-mill sands from hydraulic classifier. 20 on 8 : 1 sands from cone treating hydraulic-classifier overflow and 40 and 10 tons respectively on tables treating coarse and fine middlings from other tables.

r All <80-m., 72% <200-m.

s, t, u See p. 66.

s	Percentages on screen		
Mill	Chino	Cananea	P. D. Moctezuma
Screen			
8-m.	.....	.....	5.9
10	10.9	.....	22.4
14	15.2	.....	21.1
20	14.8	.....	18.0
28	14.8	.....	11.5
35	16.0	2.0	8.2
48	12.1	4.0	4.9
65	8.3	9.4	3.1
100	4.3	14.0	2.1
150	1.6	11.2	1.4
200	0.5	7.6	0.4
<200	1.5	31.8	0.6

t	No. 1	No. 2	No. 3	No. 4
Feed.....	1.18	0.72	0.32	1.28
Tailing.....	0.33	0.60	0.23	0.40
Concentrate....	5.48	4.36	3.64	5.60
Middling.....	.....	.....	.....	0.98

u	Au, oz.	Ag., oz.	Cu, %	Pb, %	Insol., %	Fe, %	Zn, %
Feed.....	0.12	3.3	0.4	4	48	8.9	9
Tailing.....	0.02	0.8	0.25	0.8	78	2.5	2.8
Concentrate No. 1.....	0.35	9.0	6	14	3	26	3
Concentrate No. 2.....	0.14	3.0	1	3.8	7	24	20

item *a*) is formed as follows: A full-length cleat, 1/4 in. wide, tapering from 1/2 in. deep at the head-motion end to a feather edge at the concentrate end is laid along the tailing side with the lower edge in the same plane as the outer face of the outer deck timber. The shortest riffle cleat, about 4 ft. long, 1/4 in. wide, and tapering from 1/4 in. deep at the motion end to a feather edge, is placed parallel to the first and partly under the feed box. Forty-four other riffles of the same width, spaced on about 1 3/8-in. centers, are then placed between the first two. Their heights at the motion end are graduated between those of the first two cleats; they terminate along a diagonal line joining the thin ends of these cleats, and each is tapered gradually to a feather edge at this line. Brads penetrating at least 3/8 in. into the wood of the deck and spaced on about 6-in. centers should be used to hold down the cleats. In placing NEW LINEOLEUM and riffles on a deck, first allow the linoleum to flatten out of its own accord in a warm, dry place, then set it on a clean, smooth deck with an overlap on the tailing side and concentrate end of about 1/4 in. Tack lightly in place. Lay the longest riffle, mark the location of the shortest and of the diagonal line, then lay the remaining riffles, working upward from the tailing side, using a template to obtain the desired spacing. Finally tack down the edges of the linoleum and place quarter-round strips on the feed side to exclude water and pulp from the under side. Puffs will usually disappear after a few days' use and should not be tacked down. Fig. 52 shows four types of riffling.

Tables are built both right- and left-hand. RIGHT-HAND TABLES have the feed box and drive pulley at the right when the observer stands at the head-motion end and faces the table; LEFT-HAND, *vice versa*. In a large installation, about 10% of floor space and some piping and laundering can be saved by mounting a right- and a left-hand table close together, leaving an aisle between every two pairs.

FEED AND WASH-WATER BOXES are open-topped troughs carried along the high side of the table deck. Feed box is attached to the deck and extends about one-quarter to one-third the length from the head-motion end. Wash-water box extends the remaining distance along the table and, in the modern types, is also attached to the deck. Egress is by holes at the back (upper side) of the boxes and is regulated by fingers buttoned over the holes. The shaking motion keeps the heavy portion of the feed sufficiently in suspension to cause it to distribute and flow. Water is introduced by hose through a hole in a cover board over the center of the water box, thus preventing splashing. An open water box is superior to perforated pipe as it permits ready cleaning of clogged exit holes.

The old method of distributing wash water along the concentrate end by a shallow cantilever trough with drip holes near the lower corner has been discontinued. The best method of keeping this end of the table washed is to cut the end back diagonally by shortening the tailing side 3 to 6 in., or water discharged from the feed-side water box may be diverted in part to the concentrate end by a proper arrangement of small cleats tacked to the unriffled surface.

SEPARATION OF CONCENTRATE FROM MIDDLING should always be made on the concentrate end where the movement of the discharging stream is parallel to the splitter edge. The tailing-middling split can be brought to the end also, with considerable advantage in some cases, by bringing the line of termination of riffle cleats up to about the quarter-point on the concentrate end. Fingers fastened to the deck are sometimes used to do away with constant tilting of the deck or shifting of the product pans. A finely corrugated discharge lip on the concentrate end aids in effecting a clean cut between products.

Performance. Table 51 is a summary of operations of Wilfley tables on lead, zinc, copper, and precious-metal ores. Table 52 shows the performance of tables on several different grades of classified feed at NEVADA CON. COP. CO. In most mills the Wilfley table is used on sandy feed, making clean concentrate and a tailing to be reground and retreated

Table 52. Performance of Wilfley tables at Nevada Consolidated

Tables	Assays, per cent.				Ratio of concentration	Recovery, per cent.	Tons per 24 hr.	Wash water, g.p.m.
	Feed, Cu	Concentrate		Middling+tailing+slime, Cu				
		Cu	Insoluble					
Gallery	3.4	17.5	26.4	2.02	11.5	48.7	.....	.....
Gallery *d*	3.9	14.5	41.6	2.18	7.2	51.3	9–25	.....
Row No. 1 *e*	3.4	19.2	27.6	1.94	11.5	49.0	9–25	87
Row No. 2 *a*	3.3	19.2	29.7	1.72	10.9	53.0	7–15	10.8
Row No. 2 *b*	2.4	16.1	34.4	1.57	17.4	38.3	7–15	.....
Row No. 2 *c*	2.3	22.3	19.3	1.46	26.0	38.0	7–15	.....
Row No. 3	2.2	16.7	35.9	1.31	16.4	45.3	18	9.1
Row No. 4	2.1	18.6	28.6	1.38	23.2	37.7	20–22	10.7
Rows Nos. 5 and 6	1.6	18.0	35.3	1.28	52.0	21.6	12	8.1

a Feed, second spigot of classifier.
b Feed, middling from gallery Wilfleys.
c Feed, overflow of classifier.
d Feed, first spigot of classifier.
e Feed, second spigot of classifier.

At NEW JERSEY ZINC Co., Franklin mill, two identical groups of 20 Wilfley No. 9 tables are used for separating <28-m. willemite from calcite. Feed is deslimed in 8-ft. Allen cones, the sands of which are subdivided by two 20-spigot Pellett classifiers (Sec. 8, Art. 11), each spigot feeding a separate table. Tables are single-deck, 12 ft. 8 in. long on the feed side, 12 ft. 10 1/2 in. on the tailing side, by 5 ft. 2 in. wide at mechanism and 4 ft. 7 5/8 in. at concentrate end. Cover is 3/16-in. rubber, with pine riffles. Speed of all, 315 s.p.m. Length of stroke: 7/8 in. on tables 1 to 4; 13/16 in. on Nos. 5 to 8; 3/4 in. on Nos. 9 to 12; 11/16 in. on Nos. 13 to 16; 5/8 in. on Nos. 17 to 20. Feed, containing 75% water, ranges from 0.25 to 0.50 ton solids per hr. per table, and assays 27% Zn; tailing, 1.25%; concentrate, 47% Zn; all middling returns to tables *via* the classifier. Wash water per table, 600 g.p.h.; power, 1 hp. One man attends 20 tables, adjusting stroke, tilt, and water. Average working time lost, 3% for minor repairs; more important changes are made during an idle shift. At CALUMET & HECLA, conglomerate mill, standard linoleum-topped, wood-riffled, single-deck tables account for about 42% of the total copper output of the plant, Woodbury jigs (Art. 6), flotation, and ammonia leaching contributing most of the remainder (*IC 6364*). The tables serve a variety of purposes: (*a*) In each of the 11 primary crushing units, 2 tables receive the hydraulically classified slime from 2 Woodbury jigs, producing finished concentrate, tailing for flotation, and middling for retreatment on a third table which yields only concentrate and tailing. (*b*) In each of the same units, 2 tables take all 5 hutch products of 2 jigs, making concentrate, middling to be cleaned on a third table (as above), and tailing for regrinding. (*c*) In each of 24 recrushing units (treating the last-mentioned tailing together with those from the jigs) 5 tables, fed direct from a Hardinge pebble mill, make tailing and a rough concentrate, the latter yielding finished concentrate (and tailing) on 2 additional tables; all tailings from these 7 tables go to flotation and leaching. Table 53 gives screen assays on the work of tables in groups *b* and *c*, above,

Table 53. Products of two groups of Wilfley tables, Calumet & Hecla conglomerate mill, 1929

Mesh	Tables treating hutch products of jigs. Tailing		Tables treating Hardinge-mill product *a*			
			Tailing		Concentrate	
	% Wgt.	% Cu	% Wgt.	% Cu	% Wgt.	% Cu
>20	13.8	1.09	0.2	.....	0.3	45.90
28	26.0	0.78	1.3	0.53	0.4	84.30
35	32.7	0.59	6.5	0.57	1.2	84.10
48	16.4	0.43	12.0	0.59	5.3	56.90
65	4.7	0.38	14.6	0.62	6.1	53.15
100	2.5	0.38	22.3	0.64	18.8	33.15
150	3.9	1.29	5.1	0.59	9.3	27.66
200	.....	.....	11.7	0.57	31.6	28.90
<200	.....	.....	26.3	0.62	27.0	51.75
	100.0	0.70	100.0	0.61	100.0	39.65

a Averaging 0.87% Cu.

as in 1929. At COPPER RANGE CONSOL. Freda mill, each of 35 Wilfley tables (made in company's shop) treats 2.4 t.p.h. of <7/32-in. crusher product sized as in Table 54. Deck is 14 ft. 9 in. long, 6 ft. 1 in. wide at mechanism end and 5 ft. 1 in. wide at concentrate end; cover is Armadillo rubber 1/8 in. thick, with fabric back. The 27 (usually maple) riffle strips (terminating in standard fashion, Fig. 52, item *a*) are uniformly 1 1/2 in. wide, 5/16 in. high, and spaced 3/4 in. apart. The down-slope side of each strip is beveled from the centerline down to a thickness of 1/4 in. Each strip is terminated by a

separate tip 9 in. long, feathering to its end. Strokes, 1 1/8 in. @ 255 r.p.m. Water in feed, 66%; wash water (clear), 620 g.p.h. per table; power, 0.3 hp. One man attends 16 tables, adjusting feed, wash water, tilt, and length of stroke. Assays, % Cu: feed, 3 to 5; concentrate, 60 to 63; middling, 2.5 to 3.5; tailing, 0.4 to 0.7. Breakage in head motion is the chief cause of delays.

Table 54. Sizing test of feed to Wilfley tables, Freda mill

Mesh	Per cent.	Mesh	Per cent.
6	21.2	48	6.4
8	16.8	65	3.7
10	12.9	100	2.8
14	9.6	150	1.6
20	8.1	200	0.8
28	6.6	<200	1.2
35	8.4		100.0

At MAGMA, treating a massive mixture of bornite, pyrite, and chalcopyrite (all carrying gold and silver) in a gangue of silicified diabase, 18 Wilfley No. 6 tables are used as roughers in advance of flotation, to which all of their tailings are subjected (*IC 6319*). Feed to tables is unclassified undersize of a Callow 14-m. screen, with 45% water; average capacity for solids, 1.75 tons per hr. per table (750 t.p.d. to the mill). Table concentrate comprises 43% of the total mill yield. Tables, 15 ft. long, 6 ft. wide at head, and 5 ft. wide at concentrate end, are covered with moderately rough linoleum, which lasts 18 mo.; full-length wooden riffles are 1/4 in. wide, 1 in. apart; concentrate end of deck is 1/2 to 3/4 in. higher than feed end. Speed, 240 @ 7/8-in. s.p.m. A 10-hp. induction motor drives a group of 6 tables by line shaft, with expenditure of 0.42 kw.-hr. per ton. Wash water, 480 g.p.h. per table. The ball-mill operator also attends to all 18 tables, adjusting only tilt and wash water to attain a certain limit of insoluble in the concentrate. Owing to metallurgical requirements, high iron is desirable. Ratio of concentration, 5.5 : 1. Table 55 presents additional data as of 1929. In 1939, average copper assays were reported as: feed, 5.07; concentrate, 9.90; tailing, 3.99%. At AMERICAN METAL CO., Shafter, Tex. (*113 A 704*), a

Table 55. Wilfley tables in Magma mill, 1929

Screen analyses, per cent.				Assays, per cent.				Recovery in concentrate, %
Mesh	Feed	Conc.	Tailing		Feed	Conc.	Tailing	
>14	2.7	1.5	3.0	Cu	7.12	15.92	5.23	39.5
28	17.0	11.0	18.5	Fe	14.0	31.0	10.6	36.9
35	11.5	6.5	12.2	CaO	1.0	0.9	1.1	.....
48	11.3	9.0	11.5	Al_2O_3	7.3	1.8	7.9	2.4
65	11.0	12.5	10.0	SiO_2	49.2	9.3	56.9	3.1
80	7.0	6.5	6.4	S	14.1	35.2	10.2	.....
100	6.0	10.5	5.0	Ag, oz.	3.48	8.82	2.63	34.8
150	7.7	14.5	5.8	Au, oz.	0.037	0.082	0.015	72.8
200	4.9	13.5	3.2					
<200	20.9	14.5	24.4	% Wgt.	100.0	17.8	82.2	
	100.0	100.0	100.0					

siliceous and partially oxidized lead-silver ore, with occasional free gold, is treated on a battery of 11 standard Wilfley tables to extract as much as possible of the argentiferous galena before cyaniding. Of these tables, 3 are fed direct with <10-m. primary feed; 6 receive feed direct from tube-mill and deliver middling to 2 cleaning tables. All tables yield finished concentrate, while all tailing returns to tube-mill-classifier circuit and thence to cyanidation. Data in Table 56 refer to operations in 1929 as above described. Feed to the first 3 tables, containing about 50% of the total lead going to tables and diluted

Table 56. Feed and products of Wilfley tables, American Metal Co., 1929

Mesh	Feed from screen, Pb, 3.5%		Feed from tube-mill, Pb, 0.97%		Combined tailing, Pb, 0.70%		Combined concentrate, Pb, 44.82%	
	Wgt., %	Ag, oz. per ton	Wgt., %	Ag, oz. per ton	Wgt., %	Ag, oz. per ton	Wgt., %	Ag, oz. per ton
>20	23.3	16.2	0.9	5.4	3.2	4.9	7.6	347.6
40	27.6	23.6	5.6	7.6	12.2	6.0	15.1	417.2
60	9.4	26.0	8.6	5.6	11.6	4.0	11.7	409.8
80	8.4	23.8	15.3	7.1	16.6	3.8	15.4	307.2
100	3.3	20.6	7.3	5.4	10.9	2.8	9.5	214.6
200	11.3	17.1	23.3	5.9	14.6	3.2	28.4	202.0
<200	16.7	13.2	39.0	4.9	30.9	2.5	12.3	230.2
	100.0	18.9	100.0	5.8	100.0	3.5	100.0	284.8

to 14% solids, averaged 32 t.p.d. Feed for the 6 tables in the tube-mill circuit was diluted only to 46% solids. Recovery of lead in concentrates from all tables was 32.8%, based on entire mill feed (157 t.p.d.) averaging 19.7 oz. Ag, and 2.5% Pb, the latter equally divided between sulphide and oxidized minerals. As reported in 1939, the mesh on the primary screen had been enlarged to 6. Standard 14-ft. tables have rubber decks and pine riffles. Speed, 260 @ 3/4 in. s.p.m. on the tables fed from screen, 5/8 in. on the others. Feed, 1.6 ton per hr. per table, carries 55 to 60% water; clear cyanide solution is used as

wash water. Assays, % Pb: feed, 1.0; concentrate, 50.0; middling, 6.0; tailing, 0.5. One man attends all tables; time lost, 6.1%, is due mainly to tube-mill repairs and power shortage. At SHENANDOAH-DIVES (*156 J 395*), treating 600 t.p.d. of complex Pb-Zn-Fe-Cu ore carrying Au and Ag, 3 Wilfley No. 6 tables in parallel come between a 6-m. trommel and a Dorr deslimer, all in closed circuit with a Marcy ball mill; tables extract a marketable concentrate, while also improving flotation recovery from the slimes by avoiding over-crushing. Both table surface and riffles are of Linatex. Speed, 260 @ 3/4-in. s.p.m. Table 57 (*PC*) records performance of these tables during a typical month when they extracted 112.9 tons of concentrate from 21,485 tons of ore. Flotation tailing, after desliming and hydraulic classification, passes to 2 other Wilfley No. 6 tables which make final tailing and a >42-m. middling; latter is recrushed in circuit with another Wilfley recovering an Fe-Au concentrate. At SUYOC CONSOL., Philippine Islands, a small (7-ft.) double-deck table for cleaning corduroy-blanket concentrate, is fed by hand, 8 hr. per day. Lower deck is 48 in. wide at feed end, 41 in. wide at other; corresponding widths of upper deck, 24 and 30 in.; linoleum cover and pine riffles. Speed, 240 @ 1/2-in. s.p.m. Concentrate contains free gold, galena and other sulphides, and tramp iron; it is treated, in batches, by pan amalgamation.

Table 57. Work of Wilfley primary tables, Shenandoah-Dives mill

	Feed assay	Concentrate assay	Recovery, per cent
Au, oz.....	0.10	6.16	32.3
Ag, oz.....	1.90	30.07	8.4
Pb, %.....	0.69	21.7	16.1
Cu, %.....	0.43	1.5	1.3
Zn, %.....	0.88	2.0	1.1
Fe, %.....	3.20	32.6	16.6
Insol., %...	.....	1.8	.....

Capacity. On zinc-sulphide ores the tonnage treated ranges from 14 tons per 24 hr. on 0.8-mm. feed to 100 tons on 2.5-mm. feed; separating willemite, with closely classified feed, capacity ranges from 6 tons with 0.4-mm. material to 12 tons at 2.3-mm. On lead ores, when both clean concentrate and finished tailing are sought, capacity ranges from 10 tons on 0.5-mm. feed to 45 tons on 2-mm. size. Capacity treating native-copper ore all through 0.6-mm. and containing 40% slime is 15 to 25 tons per 24 hr. when making clean concentrate and finished tailing. Treating porphyry-copper ore (operation now obsolete, but data useful for estimating) the capacity on material through 0.6-mm., when making finished concentrate and tailing, is 14 tons per 24 hr.; treating rougher-table concentrate capacity is 45 to 75 tons and when roughing <2.5-mm. feed, 200 tons. Separating auriferous pyrite from siliceous gangue, capacity is about 25 to 30 tons per deck on 1-mm. sands, falling to 10 tons on 0.1-mm. sands and rising to 50 tons on 2-mm. material.

Table 58. Sizing-assay test of Wilfley-table tailing, Anaconda Copper Mining Co.

Size, mm.	Per cent. weight	Assay, per cent. Cu	Per cent. total Cu
>0.84	2.31	0.23	2.39
0.50	15.58	0.20	13.66
0.35	35.39	0.21	33.42
0.17	28.64	0.19	24.32
0.07	14.98	0.14	9.08
<0.07	3.10	1.25	17.13

Size of feed, with ores, rarely exceeds 2.5-mm. Wiggin (*46 A 232*) determined that 0.025-mm. was the smallest grain that could be saved with ANACONDA ore. The coarser, sandy portion of 200-m. slime is readily saved. Table 58 is a sizing-assay test of ANACONDA table tailing when a roughly deslimed feed was being treated. Table 59 gives similar results at RAY CONS COP. CO., except that the feed was not deslimed. Here maximum loss of copper and maximum assay occur in the finest size; there is also a relatively high copper loss in the coarsest sizes.

Table 59. Sizing-assay test of Wilfley-table tailing, Ray Consolidated Copper Co.

Mesh	Per cent. weight		Assay, per cent. Cu		Per cent. original Cu	
	A	B	A	B	A	B
20	7.6	6.2	0.74	0.69	9.0	7.5
30	11.2	11.4	0.63	0.67	11.4	13.2
40	11.0	10.3	0.55	0.63	9.8	11.3
50	4.3	4.3	0.58	0.59	4.0	4.4
60	11.5	11.7	0.53	0.50	9.8	10.3
70	2.3	2.1	0.53	0.49	1.9	1.7
80	9.4	8.9	0.49	0.42	7.4	6.5
100	9.2	9.2	0.45	0.38	6.6	6.1
120	4.2	4.5	0.44	0.37	2.9	3.0
150	5.9	5.7	0.39	0.34	3.7	3.3
200	1.9	1.8	0.39	0.37	1.1	1.2
<200	21.3	23.8	0.95	0.76	32.4	31.5
Total	99.8	99.9	0.60	0.58	100.0	100.0

Speed and stroke. Speed ranges from about 230 to 280 s.p.m., being close to 250 in the majority of mills. Length of stroke averages close to 3/4 in. Within the range of practice presented, no distinct relation between stroke length and speed is established, but in general a short stroke corresponds to a high speed and *vice versa*.

Wash-water consumption ranges from 1.5 to 40 g.p.m., the high figure being in roughing service and the low corresponding to a very dilute feed pulp. Average consumption for average service is about 8 g.p.m.

Slope varies with size of feed, specific gravity of minerals, character of products desired, and the place that the products are split, as well as with the quantity of wash water. The usual slope with fine feeds is from 1/4 to 1/2 in. per ft. and 3/4 to 1 in. with coarse feeds. When roughing, the slope may be as much as 2 in. per ft.

Power. Actual power consumption under average load is close to 0.6 hp. with a usual installation of between 0.75 and 1 hp. per table. For individual drive, 1 1/2-hp. motor is standard.

Lost time is very small and is principally due to shutdowns for replacing deck covering and repairing or renewing riffles. In large mills, it is customary to maintain a reserve of fully equipped decks, with which to replace disabled decks with minimum delay. A carriage (*158 #9 J 44*) facilitates such replacements. Mechanism difficulties usually correspond to high tonnages and long stroke or to attempts to run double decks with the standard head motion (see Garfield-table head motion, Art. 20).

Operating adjustments available on the standard table are length of stroke, tilt, wash water, location of product splitters. In small mills where irregularity in feed conditions is frequently the rule, control of all of these is necessarily left with the operator. The tendency in large mills is to limit operator's adjustments to tilt and wash water, while in some mills tilt is not adjustable and the operator controls wash water only. In some plants splitters are fixed in position and products must be brought to the proper points by shifting their position on the table deck by changing tilt and wash water. It is much better to have movable splitters and to take care of all minor shifting of the product streams by moving the splitters, leaving water and tilt as nearly undisturbed as possible. Recent models, with individual drives, provide for speed adjustment, but most operators prefer a fixed speed, once this has been satisfactorily ascertained.

Comparison with other machines. For results of competitive tests with other tables, see the other tables.

As a result of a competitive test with a fine jig at BUNKER HILL & SULLIVAN, Caetani concluded (*3 MM 54*) that the Wilfley table had twice the capacity of the jig, made a higher recovery, and required less skilled labor and less water, power, and repairs. The table made a slime separation that a jig fails to make and there was less fall of material in passage through the machine. Jig concentrates were richer and the middling contained less free mineral. Tailing assayed about the same in both cases but the coarse part of the jig tailing was lower grade while the fine part was of higher grade than the Wilfley.

Buss table and Ferraris table have the deck frame supported on a number of lath-shaped ash or hickory strips, pivoted at the lower end and standing inclined toward the motion end about 15° from the vertical. The head motion is a simple eccentric. On the forward stroke particles in contact with the table deck move forward and upward with it; on the reverse stroke the particles continue to move forward but, by reason of the fall of the deck, are out of contact with the deck during a part of their forward travel. The result is that forward travel is much more active than on tables with purely rectilinear motion. Height and taper of riffles, speed, stroke length, power and water consumption, and capacity are about the same as on the Wilfley table. Riffling plan differs slightly.

Overstrom table has similar deck support but the lath springs are set so that the long transverse axes center at a point on the centerline of the head-motion shaft extended 50 ft. beyond the feed side of the table, which gives the deck a curvilinear motion. Riffle cleats are curved to make them substantially tangent to the deck motion at all points in their length. Head motion; see Fig. 60. Decks 6×15- to 9×36-ft.

17. BUTCHART TABLE

Description. This table (also called NATIONAL TABLE) is a rectangular-deck, full- or part-riffled table, differing from those previously described in that the riffles are bent

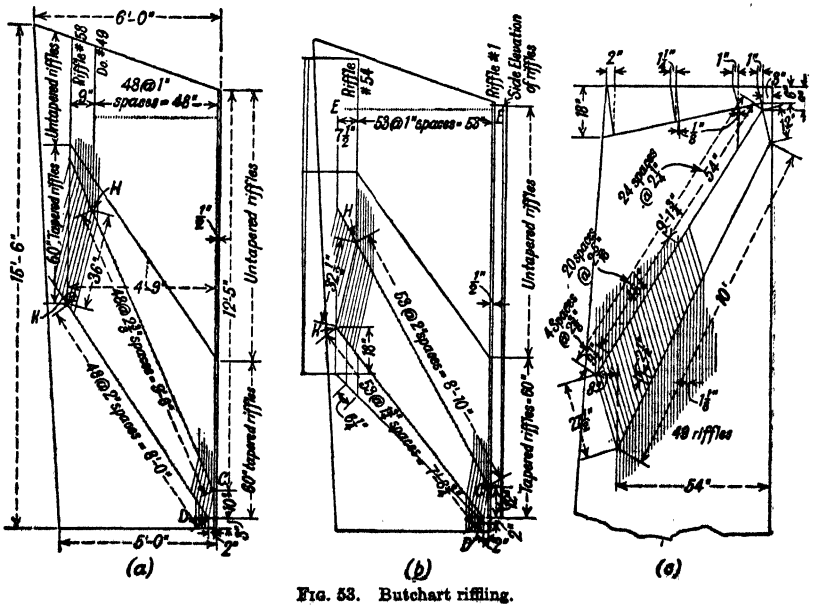

Fig. 53. Butchart riffling.

diagonally toward the feed side about along the line of the "Wilfley diagonal" and run in this direction for a few inches, where they terminate or are again bent back substantially parallel to the tailing side. Diagonally terminated riffling is used for cleaning; full-length riffling principally for roughing but also for cleaning. The WAVE in the riffles along the diagonal line is claimed to effect a rotary vanning motion that aids in bringing gangue to the surface of the beds in the riffles where it can be washed away. Fig. 53 shows plans of three forms of Butchart riffling. Either of types *a* or *b* may be changed to full length by continuing the riffle cleats to the concentrate end in a direction parallel to the tailing side. Probably most Butchart riffling is mounted on Wilfley mechanisms, but a Butchart head motion (Fig. 54) of the toggle type is built.

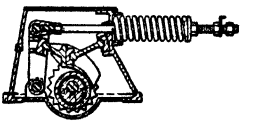

FIG. 54. Butchart head motion.

Table 60. Performance of Butchart table

Mill	Kind of ore	Size of feed	Speed, r.p.m.	Stroke, in.	Tons per 24 hr.	Wash water, g.p.m.
Chino Consolidated Copper Co. *c*	Copper	*b*	248	1 1/2	40–75	12.5
Phelps Dodge, Morenci *d*	Copper	<3 1/2-m.	256	7/8	175	.....
Phelps Dodge, Morenci *c, f*	Copper	*b*	256	3/4	45	10
Phelps Dodge, Morenci *w*	Copper	*v*	.....	.....	43.6	.....
Braden Copper Co	Copper	*e*	250	.....	214	.....
Braden Copper Co	Copper	*g*	240	.....	116	.....
Phelps Dodge, Burro Mountain *l*	Copper	<4-m.	275	3/4	150–200	.....
Phelps Dodge, Burro Mountain *u*	Copper	*t*	.....	.....	42.5	.....
Phelps Dodge, Burro Mountain *x*	Copper	14-m.	.....	.....	144.3	.....
St. Joseph Lead Co., Bonne Terre *c, m.*	Lead	*b*	270	7/8	55	12
St. Joseph Lead Co., Bonne Terre *c, m.*	Lead	*b*	280	1	65	10
Federal Lead Co., No. 4	Lead	*b*	275	3/4–7/8	30	7–8
Shattuck-Arizona *i*	Lead carbonate	*j*	267	5/8	200	25 *s*
Shattuck-Arizona *l*	Lead carbonate	*k*	295	7/8	100	25 *s*
Belmont-Shawmut *q*	Auriferous pyrite	<10-m.	245	1 1/8	57	.....
Real Compañía Asturiana de Minas *p, r.*	Lead-zinc	*b*	.....	.....	45	.....

Mill	Water in feed, %	Horse-power	Assays, per cent.				Attend-ance, machines per man
			Feed	Conc.	Tailing	Middling	
Chino Consolidated Copper Co. *c*	50	1	*a*	14.89	1.64	4.41	35
Phelps Dodge, Morenci *d*	.....	0.5	1.8	11.5	1.05	.....	23
Phelps Dodge, Morenci *c, f*	.....	0.5	1.15	10.5	0.58	0.75	23
Phelps Dodge, Morenci *w*	78	.....	0.39	4.49	0.34	.....	.....
Braden Copper Co	37.5	.....	2.80	17.8	2.16	.....	.....
Braden Copper Co	55	2 *h*	2.15–1.56	16.2–18.4	1.03–1.83	.....	.....
Phelps Dodge, Burro Mountain *l*	65	0.7	1.9	15.6	1.2	.....	12
Phelps Dodge, Burro Mountain *u*	.....	.....	0.646	10.56	0.484	.....	.....
Phelps Dodge, Burro Mountain *x*	55	.....	2.17	14.71	1.33	.....	.....
St. Joseph Lead Co., Bonne Terre *c, m.*	50	0.75	8	77	0.45	8 *n*	18
St. Joseph Lead Co., Bonne Terre *c, m.*	50	7/8	8	78	0.45	8 *n*	18
Federal Lead Co., No. 4	53	1	5	70	0.4	4	20
Shattuck-Arizona *i*	60	1 *h*	.....	.....	.....	.....	.....
Shattuck-Arizona *l*	65	1 *h*	*y*	*y*	*y*	*y*	.....
Belmont-Shawmut *q*	.....	.....	$5	$63	.....	.....	.....
Real Compañía Asturiana de Minas *p, r.*	68	.....	.....	42–51 Zn *o*	.....	.....	.....

a Garfield-table concentrate, about 5 to 6% Cu.
b For screen test, see Table 60*a*.
c Standard full-length Butchart riffling on No. 5 Wilfley deck.
d Riffles terminated on diagonal at end of curve. Wilfley deck cut 2 ft. short.
e 1% >8-m., 35% <65-m.
f Tables set 10 ft. center-to-center.
g 5% >14-m., 19% <65-m.
h Installed.
i See Fig. 53, item *c* for sketch of riffling.
j All <4-m., 15% <200-m.
k 10% >48-m., 16% <200-m.
l Rougher.
m Riffles 7/16 in. deep at head end and 1/8 in. at concentrate end; slope in curve zone 1 in 4.
n About 10% of feed by weight.
o Contains 2 to 4% Pb and about 9% dolomite.
p Recovery about 70% of lead and 65% of zinc.
q *121 P 660*.
r *115 J 395*.
s Estimated.
t Flotation tailing deslimed in Allen cones.
u Oxide Cu in feed, 0.156%; tailing, 0.140%; insoluble in concentrate, 31.9%.
v Flotation tailing, all <48-m., 70% <200-m.
w Oxide Cu in feed, 0.15%; tailing, 0.15%; insoluble in concentrate, 31.7%; iron, 29.1%.
x Oxide Cu in feed, 0.25%; tailing, 0.227%; insoluble in concentrate, 15.0%.

y	Au, oz.	Ag, oz.	Pb %	Fe %	Insol. %
Feed	0.04	5.8	2.9	8.0	82.0
Concentrate	0.22	21.0	15.6	20.4	47.8
Tailing	0.02	3.1	0.6	.....	.....

Effect of full-length riffling is shown in Fig. 55. The coarsest heavy mineral discharges highest up on the concentrate end and there is a uniform decrease in size of heavy mineral in the concentrate as the tailing side of the table is approached. The gangue sizes, on the other hand, are distributed as on the Wilfley table. This arrangement of discharging grains is due to the fact that after stratification, which takes place as shown in Fig. 46, although the light minerals are washed away as on the Wilfley table, the heavy minerals receive support from the riffles the full length of the deck, are not subjected to film-sizing, and the only effective force acting to cause size segregation is eddying in the riffles. The eddying water lifts the finer particles more readily than the coarse and these particles are, therefore, carried over the riffle cleats and down slope, while the coarse particles travel along to the end of the table. The result is to spread the product bands at the discharge edges of the table and permit much closer and cleaner splitting than is possible with diagonally terminated riffles. This is particularly true of the concentrate-middling split. On the other hand, the full-length riffles support fine gangue and carry it toward the concentrate end, with the result that more water must be used to get clean concentrate than on a table with partly plane surface, and there is more fine clean gangue in the middling.

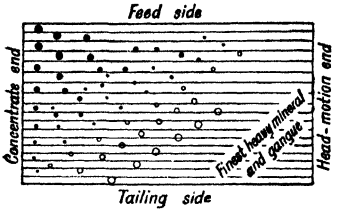

FIG. 55. Distribution of minerals at discharge end of a shaking table riffled full length.

Performances at several mills are given in Table 60.

In the BROKEN HILL SOUTH mill, erected 1928 (*88 Aa 247*), 28 Butchart tables treat tube-mill discharge deslimed in Dorr C-20 classifiers, of which each feeds 7 tables at 1.57 t.p.h. per table, including 0.24 ton of returned middling. The table is 15 ft. 8 in. long on the feed side, 13 ft. 9 in. on discharge side, by 5 ft. 11 1/2 in. wide at the feed end, and 5 ft. at discharge end. Complete deck weighs 705 lb. Oregon-pine riffles, 1/4 in. wide and 1 in. apart, are 1/4 in. high for 7 1/2 ft. from feed end, tapering to 1/16 in. in the next 5 ft., and terminating at the diagonal intersection with cleaning plane. The last segment of riffles curves upward toward the feed side. Linoleum cover has a maximum life of 16,640 running hr.; riffles at feed end, 8,152 hr.; with moderate repairs at this end, riffles will last as long as linoleum. Feed is delivered by a vertical pipe, discharging into a box with chilled-iron bottom and holding a bed of ore to reduce wear. Speed, 293 @ 7/8-in. s.p.m. Each row of 7 tables is driven through countershaft by a 7.5-hp. motor. Floor, 104 × 77 ft., slopes 2 in. per ft., and supports steel-lined concrete launders. Middling returns to the Dorr classifiers; tailing is further reduced to flotation size. Operating results over latter half of 1931 are in Table 61.

Table 60*a*. (Supplement to Table 60.) Sizing tests of feeds to Butchart tables

Screen aperture, mesh	Per cent. weight on screen				
	Chino Consolidated Copper Co.	Phelps Dodge, Morenci	St. Joseph Lead Co., Bonne Terre	Federal Lead Co. No. 4	Real Compañia Asturiana de Minas
10	4.3	0.10	.....	.....	.....
14	6.9	0.74	6.5	.....	19
20	8.5	4.47	16.2	15.2	.....
28	12.7	18.71	20.0	.....	17
35	20.4	26.70	14.0	29.3	.....
48	19.7	19.91	12.3	17.5	.....
65	14.0	12.32	9.2	12.4	.....
100	6.8	6.45	8.6	7.9	45
150	2.9	3.85	8.8	9.5	12
200	1.1	0.94	2.2	4.4	5
<200	2.7	5.81	2.2	3.8	2

Maximum size of feed that can be handled depends upon the type of riffling. In roughing service, with tables riffled full length, the maximum size of feed is probably about 3/8-in., but with such coarse feed, while a clean coarse concentrate can be taken, it is difficult, if not impossible, to make a satisfactory separation of middling from tailing. In finishing service, with diagonally terminated riffles, the maximum size that can be satisfactorily treated is about the same as on a Wilfley table, *viz.*: 2- to 2.5-mm. Minimum size is the smallest that will settle in the cross-water current and will therefore be smaller the smaller the maximum-sized particle of feed. At the Bonne Terre mill of ST. JOSEPH LEAD CO., general mill concentrate was deslimed at 100-m. and the fines thickened and treated on a Butchart table. The concentrate assayed 80% Pb.; 95% passed a 200-m. screen; tailing assayed 6% Pb. When coarse feed is treated it is necessary to have fine sand present. Attempts to enrich jig lead concentrate on the table failed until sandy table concentrate was added.

Riffling is varied according to the character of service and size of feed. Full-length riffling is used principally in roughing, but may be used also for finishing, especially when the ratio of concentration is low; diagonally terminated riffles are used for cleaning. Riffle cleats are usually 1/8 in. high at the concentrate-discharge end, tapering from about 1/2 in., but when the feed is coarse, ratio of concentration

low, or tonnage exceptionally high, the taper may be from 1 in. to 3/8 in., in order to provide concentrate-carrying capacity. With such deep riffles at the concentrate end, they are usually given a slight curve downhill near the end in order to keep sufficient water along this end to prevent banking. The average RISE of RIFFLE CLEATS in the "wave" section is 1 in. in 4 in. of run parallel to the tailing side. The steeper the rise the cleaner the concentrate, other conditions being constant. Riffle cleats in roughing service or with coarse feed are usually of hard wood, oak or maple preferred; in cleaning, sugar-pine cleats are satisfactory. Life of oak riffles is three times that of pine.

Linoleum is the usual DECK COVERING, but soft rubber (old vanner belts) has been used at the Morenci branch of PHELPS DODGE and in the SOUTHEAST MISSOURI lead district. Concrete has been used at Bonne Terre mill of ST. JOSEPH LEAD Co. Concrete mixture was 2 of sand (2-mm.) to 1 cement; it was laid on linoleum flush with the tops of riffle-nailing cleats 3/16 to 1/4 in. high and was given a steel-trowel finish. Life of linoleum covering is 6 mo. to 3 years, depending upon the size of feed; rubber has a longer life, but new covers cost three to four times as much as linoleum.

Capacity on 2- to 3-mm. feed in roughing service is from 100 to 200 tons per 24 hr. which is about the same as that of the Garfield table (see Art. 20). In finishing work on 1.5- or 2-mm. feed the capacity on lead ores is from 30 to 65 tons per 24 hr. and in cleaning rough copper concentrate, through 8-m., ranges from 40 to 75 tons. Cole (*51 A 405*) reports 80 t.p.d. treating deslimed Hancock-jig concentrate, <3/8-in., at MORENCI, lowering the percentage of insoluble from 30 to 15.

Speed and length of stroke. The usual range in speeds is from 240 to 280 s.p.m. and average length is close to 1 in. The examples cited do not show any distinct relationship between character of feed and the stroke, nor between speed and stroke length, but in general the rule applies that coarse feeds require longer and slower strokes than fine feeds.

Wash-water consumption averages close to 10 g.p.m.

Lost time is estimated as close to 1% on the average and is due principally to replacement of deck covering and riffling.

Attendance. Operators control tilt and wash water in all mills reporting and at MORENCI also control feed rate to a certain extent. The relatively low figures under "machines per man" in Table 60 are probably due to the fact that no more tables were installed calling for attention. Butchart riffling, particularly full-length, spreads the concentrate and middling bands out into wide fans which change position only slightly with changes in feed rate, hence control is easy and attendance should be small.

Butchart *vs.* Wilfley. Cole (*51 A 405*) reports the following 4-day test at MORENCI.

Feed, deslimed rougher tailing after regrinding to pass 1.5-mm. Results as in Table 62, test A. Test B in the same tabulation shows the results of treating roughly deslimed 20-m. feed on a Butchart table with special deep riffles. On the bases of metallurgical results alone the advantage, if any, in these tests was with the Wilfley table on account of the fact that tailing was too high grade to discard in both cases and the operations must therefore be judged on the concentrate taken out; but capacity and water consumption and, necessarily, power, labor, and maintenance were all in favor of the Butchart. Results of similar competitive work in treating lead ores in SOUTHEASTERN MISSOURI were the same, the Butchart table yielding the same tailing and concentrate when treating 50 to 60 tons per 24 hr. of deslimed 2-mm. feed as the Wilfley table yielded when treating 20 to 25 tons (*57 A 360, 429*). In analyses of operation in both these fields the Butchart table was credited with elimination of all classification other than rough desliming, but this saving in treatment was rather due to the introduction of flotation, which removed from the tables the burden of making finished tailing.

Butchart table *vs.* jigs. Table 63 presents the results of a competitive run between a Butchart table and a Harz jig at the DETROIT COPPER Co. plant on primary feed passing a 7-mm.

Table 61. Performance of Butchart tables in Broken Hill South mill, 1931

Sizing analysis. On opening of . . mm.	Feed 1.57 t.p.h. per table				Concentrate 0.11 t.p.h. per table				Middling 0.24 t.p.h. per table				Tailing 1.22 t.p.h. per table			
	Wgt., %	Pb, %	Ag, oz.	Zn, %	Wgt., %	Pb, %	Ag, oz.	Zn, %	Wgt., %	Pb, %	Ag, oz.	Zn, %	Wgt., %	Pb, %	Ag, oz.	Zn, %
0.421	4.6	1.9	1.4	5.8	1.9	28.3	.....	13.6	3.3	.....	.....	13.6	5.0	2.1	2.3	7.0
0.317	6.0	2.9	2.4	7.9	2.6	67.3	17.1	7.6	2.0	1.8	.....	21.0	7.1	2.4	2.9	10.5
0.211	18.0	4.2	3.4	10.2	7.8	77.1	24.3	3.7	6.6	7.7	5.4	20.8	21.3	3.3	3.6	13.8
0.157	14.7	5.7	4.5	9.3	7.6	79.7	24.3	2.3	8.1	13.3	11.0	19.3	16.6	4.3	4.9	12.5
0.107	15.0	7.7	5.2	10.1	11.9	80.7	23.0	2.0	12.9	16.2	6.2	18.5	15.8	5.0	6.2	14.0
0.063	28.7	10.5	6.0	13.3	43.8	76.9	22.7	3.7	45.4	11.3	5.1	23.8	24.1	4.9	6.9	18.4
<0.063	13.0	13.3	7.7	14.6	24.4	75.9	21.0	3.8	21.7	7.8	6.3	27.0	10.1	9.6	10.1	20.9
Average	100.0	10.6	6.8	11.2	100.0	76.1	22.3	3.7	100.0	10.6	6.0	22.8	100.0	4.6	5.5	14.9

screen, without desliming (*51 A 405*). At ST. JOSEPH LEAD Co., Bonne Terre, Hancock jigs gave better separation of middling from tailing than the table on 9~2-mm. feed and tables were rejected for treating material coarser than 2-mm. (*57 A 429*).

Table 62. Butchart *vs.* Wilfley table at Morenci plant, Phelps Dodge Co.

Test	Table	Feed		Concentrate		Middling, Cu, %
		Tons per 24 hr.	Cu, %	Cu, %	Insol., %	
A	Butchart.....	101	1.66	12.46	11.3	0.91
	Wilfley.....	35.5	1.47	13.21	10.9	2.26
B	Butchart.....	96.8	1.57	14.32	17.4	1.0
	Wilfley.....	23.2	1.39	15.2	16.8	1.55

Test	Table	Tailing, Cu, %	Middling + tailing, Cu, %	Ratio of concentration	Recovery, %	Water	
						Gal. per min.	Gal. per ton
A	Butchart.....	0.55	0.61	11.3	66.5	16	256
	Wilfley.....	0.59	0.76	17.5	51.2	12	867
B	Butchart.....	0.74	0.79	17.3	52.6	.....	.....
	Wilfley.....	0.68	0.81	24.8	44.1	.....	.....

Table 63. Butchart table *vs.* Harz jig at Detroit Copper Co.

Machine	Feed		Concentrate		Tailing, Cu, %	Ratio of concentration	Recovery, %
	Tons per 24 hr.	Cu, %	Cu, %	Insol., %			
Butchart table...	160	3.15	16.65	5.8	1.42	8.8	60.04
Harz jig.....	35	3.19	17.43	11.9	1.63	10.1	53.95

18. CARD TABLE

Description. This table differs from the Wilfley principally in that the riffles are cut into the deck and are triangular instead of rectangular in cross-section (Fig. 56). The cross-section of the riffles increases from the head-motion end to a maximum along a diagonal corresponding to the termination of standard Wilfley riffles, then decreases to nothing at the concentrate end. On tables for fine feed the riffles contract from maximum section at head-motion end to disappearance at the diagonal line. Riffles for coarse feed are about 2.5 in. apart, 5/8-in. maximum depth and 1/16-in. minimum.



FIG. 56. Cross-section of riffling on Card table.

Head motion is shown in Fig. 57. *A* and *C* are fixed pins and *B* a fixed toggle block. The motion of crankshaft *G* is transmitted through the pitman and toggles to lever arm *D*, thence by connecting arm *F* to lever *H*, the upper end of which *E* draws the table deck back against spring *S*. The forward stroke is impelled by spring *S* but controlled by the mechanism. Length of stroke is varied by changing the position of pin *P* in lever *D*. The deck motion is differential, of the same general character as the Wilfley, but has been found to give a sharper return stroke and thus affords greater capacity. The deck is roughly 5 1/2 × 16 ft. There is a line of flexure in the deck along the diagonal from the feed corner, which permits the slime corner to be raised or lowered out of plane with the other half of the deck. When the deck is tilted up, crowding occurs along the diagonal of separation. The deck is usually set horizontally lengthwise. The Card table has been best known in the BUNKER HILL & SULLIVAN lead-silver mill (*3 MM 50*), in the lead-zinc mills of BROKEN HILL, N. S. W. (*28 MM 8; 28 IMM 14*), and at a few mills in central and southwest Colorado treating complex sulphide ores (*Richards, IV*); it was particularly noteworthy for its ability to carry overload without serious loss of efficiency. It was not employed in any of the mills from which reports were received in 1939.

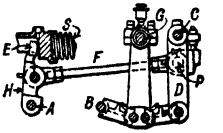

FIG. 57. Head motion, Card table.

19. DEISTER-OVERSTROM DIAGONAL-DECK TABLES

Description. Decks of these tables are rhombohedral, with rectilinear motion in the direction of the short diagonal, which is also the tilting axis and the direction of all riffling.

Feed is distributed for about one-half (sometimes more) the length of the upper edge, tailing discharges over the lower edge, and concentrate (also middling, if desired) over the end opposite the mechanism. The entire deck area lies in one plane, and a portion of it (variable with type of service) is unriffled.

The asserted ADVANTAGE of the rhombohedral as compared with a substantially rectangular shape is argued on the basis of Fig. 58. When treating a sized or classified feed on a rectangular deck, the area of table actually occupied by ore takes the form of a diagonal band from feed to concentrate corners, approximately bisected by the line *CD;* with a given setting of table, feed, and water adjustments, the width of this band depends primarily upon depth of riffles, shallow riffles tending to widen and deep riffles to narrow the band. An unsorted feed travels in a wider band; its finest components are largely discharged between points *B* and *J* (see also Fig. 45). On a rectangular deck, the rate of feed is limited to the amount that can be settled and stratified while passing over riffled area *ABDC.* The rhombohedral deck, with riffled area *CHBFG,* makes the additional riffled area *BFJ* available. All other things being equal, this added riffled area in the slime path will settle some material that would have been discharged by a rectangular table along the line *BD.* The rhombohedral deck should, therefore, treat a larger tonnage of a classified feed, or handle a longer-range feed than a rectangular table with equal tailing loss. Unriffled areas for cleaning are approximately equal (*GFK vs. CDE*). Shallow riffles on the Deister-Overstrom decks spread the band and facilitate segregation.

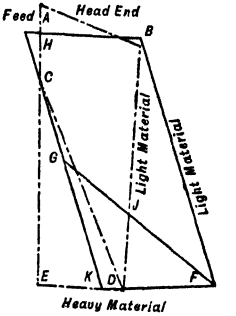

FIG. 58. Diagonal *vs.* rectangular deck.

The argument is plausible. Certainly the opportunity for catching and bringing material to the cleaning plane is greater on the diagonal deck, and there is also a proportionately longer line of riffling on the line of cross-water flow below the emergence of any given riffle at the cleaning plane on the rhombohedral than on the diagonal deck. Hence there is more chance to catch heavy mineral scoured off the cleaning plane and re-present it.

Construction. Table base is a pair of parallel longitudinal 9-in. channels, tied on bottom by sole plates at middle and ends. Longitudinal slope is adjusted by shimming under the concentrate end. Head motion and a rocker arm are mounted at one end, and another rocker and a helical compression spring at the other. Straddling the upper edges of the channels are 3 saddles with circular depressed upper surfaces by which the tilting sub-frame is supported; the rocker arms carry no weight. The sub-frame, of braced structural steel, rests in the saddles at 3 points on its diagonal line, the 2 outer corners rest on blocks of which the elevations are adjustable by oppositely facing wedges manipulated through hand-wheel and spur gearings. Maximum tilt on the standard tables is 6°; on the special "High-tilt" table, 12°. On its upper side, at the 4 corners and 2 mid-points of its sides, the sub-frame carries 6 slide blocks, each depressed in a receptacle containing oil. The deck is built of cypress, in strips laid diagonally to its framework; each of 3 light structural-steel cross members has 2 slide blocks corresponding in position with those on the sub-frame. The main longitudinal member of the deck has a socket at each end to engage the upper ends of the 2 rocker arms between which the deck is held constantly in tension. Deck is tilted without loosening connection with the head motion. Deck is covered with linoleum or rubber (white or variously colored). Riffle cleats are pine, hardwood, or rubber, the last cemented to a rubber cover.

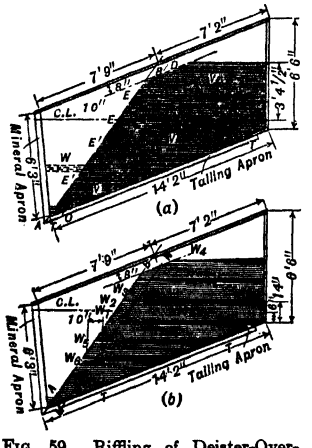

FIG. 59. Riffling of Deister-Overstrom table. (*a*), sand table; (*b*), slime table.

Riffling of the standard No. 6 tables is characterized by a large number of shallow riffles, interspersed by somewhat higher strips which provide pools to permit settlement of fine grains. Fig. 59, item *a*, shows the riffling of the SAND TABLE, recommended for feed up to 4-m. The tailing riffle strip *TT* is 1/4 in. high at head end, feathering at *A*. The "body" riffle strips *V*, 1/4 in. wide and spaced 1 1/16 in. c-c., are uniformly 1/16 in. high from head end to the line *CD*, tapering for 10 in., and feathering on line *AB*. The tapered strip *E*, on the centerline, is 1/4 in. high at head end, tapering uniformly to feather on line *AB;* other tapered strips *E'*, taking the place of every eighth body riffle, have the same pitch as *E*, that is, their head ends are proportionately reduced in height. The strips *W*, 1/32 in. high, optional as to number and position, may be added to assist a two-mineral separation. The standard No. 6 SLIME TABLE (Fig. 59, item *b*) differs from the sand table only in the riffling. The tailing strip *TT* is 2 in. wide at head and 1/4 in. wide at concentrate

end; it tapers from 1/2 in. high to feather. The master strip W_1 is 3 in. wide at head and 1/4 in. at concentrate end, tapering from 1/2 in. high to feather on line AB; the other "wave" strips W_2, W_3, etc., spaced 14 in. c-c., have the same pitch and tapering width as the master strip. All of the wave strips are triangular in section, high in the middle and beveled to feather edge on both sides; this is believed to reduce disturbance in the pools. The first 2 strips x below a wave strip are uniformly 1/32 in. high to the line MN, tapering thence for 10 in. to feather on AB. All other strips are 1/16 in. high from head to the line MN, feathering to AB; they are spaced 1 1/16 in. c-c.

Overstrom head motion (Fig. 60) comprises the eccentric shaft a; the pitman b; toggle c, bearing at one end on a pin d attached to the pitman, and at the other against the fixed pin e carried by the adjustable sliding block f; shifting of the latter varies length of stroke between 5/16 and 1 3/8 in. The two-armed yoke g encircles the pin d and is attached at the other end, by the connecting-rod h, to the rocker arm actuating the table. A continuous state of tension is maintained in the yoke g by a compression spring placed under the concentrate end of the table and opposing the backstroke of the deck, the latter coinciding with the upstroke of the pitman. In case of accidental release of tension, the guard k prevents the toggle from falling. The oil pump j lubricates the pitman head, while main shaft bearings are chain-lubricated from separate reservoirs. The entire mechanism is enclosed in a cast-iron housing.

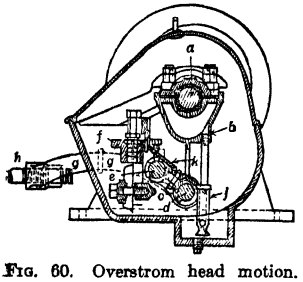

FIG. 60. Overstrom head motion.

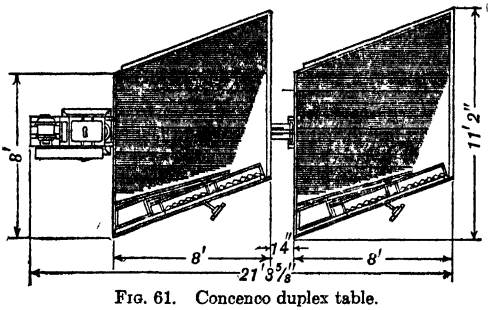

FIG. 61. Concenco duplex table.

Concenco head motion is designed for large capacities or uncommonly coarse feeds; it is interchangeable with the Overstrom head motion and may be applied to any of this manufacturer's tables. It is identical in principle with the Overstrom head motion, but is more rugged, especially as to the pitman; the eccentric runs on SKF roller bearings and the driving shaft on ball bearings, all lubricated by circulating oil. Either head motion may be driven by line-shaft belt or by individual motor; operating power, 1/2 to 3/4 hp. for the Overstrom, 1/2 hp. for the Concenco on a No. 6 table; when individually driven, a 2-hp. motor is recommended.

Concenco No. 10 Duplex table (Fig. 61) was designed primarily for coal, gravel, and similar coarse materials, but is applicable to any ore which can be treated at coarse size and high rate, or where tonnage does not require two full-sized tables.

Construction is similar to that of the No. 6 table, except that each deck slides on 4 instead of 6 bearings. The two rocker arms are connected by a bar with pin joint at each end. The Concenco head motion and 3-hp. motor are standard equipment.

Performances. In the COLQUIRI mill of Cia. Minera de Oruro (see Sec. 2, Fig. 152) diagonal-deck tables serve the following purposes: (*a*) 6 tables treat fine sands, each table fed from a separate classifier spigot (Table 64); tailing analysis is given in Table 65. (*b*) 8 slime tables treat the thickened slime from the above sands; 3 tables each fed from separate cone settlers in parallel for the heavier fraction, and 5 fed at 25 t.p.d. each, from a 50-ft. Dorr thickener, which is fed overflow from the above cones and

Table 64. Feeds to Deister-Overstrom fine-sand tables, Colquiri, Bolivia (Sec. 2, Fig. 152)

Mesh	Classifier Feed		Spig. 1	Spig. 2	Spig. 3	Spig. 4	Spig. 5	Spig. 6
	% Wgt.	% Sn						
>28	5.0	1.0	*a*	.....	.....	.....	.....	.....
35	14.0	1.5	25.0	9.0	.....	.....	.....	.....
48	19.6	1.2	25.0	19.0	10.0	.....	.....	.....
65	24.4	2.7	25.0	26.0	22.5	17.0	3.0	.....
100	13.8	2.5	15.0	22.0	27.0	25.5	12.0	17.0
200	16.4	2.2	9.0	18.5	33.5	47.5	60.0	63.0
<200	6.8	3.8	1.0	5.5	7.0	10.0	25.0	20.0
	100.0	2.3	100.0	100.0	100.0	100.0	100.0	100.0

a Included with next size.

also receives some coarser material from another source; analyses of feeds are in Table 66. (*c*) 8 slime tables retreat middling from the preceding group; (*d*) 4 slime tables retreat middling from the group (*c*) tables (Table 67); (*e*) 2 parallel tables treat the pyrite-impoverished residue from the final cleaning flotation cells (which retreat concentrates from all the preceding tables) and yield 25 t.p.d. in 2 grades of finished tin concentrate; Table 68 shows the composition of the richer product. All tables have linoleum decks and wood riffle strips. Speeds, r.p.m., of the several groups are: (*a*) 282; (*b*) 286; (*c*) 288; (*d*) 293. Power, 1 hp. each table. One man attends 6 tables, adjusting wash water and product cuts.

The CHAUPI mill of Cia. Minera del Cerro de Potosí, Bolivia, has 76 No. 6 diagonal-deck tables, 50 for sands, 26 for slimes. Sand-table feed is deslimed in all cases, and usually hydraulically classified; that for slime tables is somewhat imperfectly classified in hydraulic cones, or is merely settled slime or an unfinished product from a preceding table or flotation cell. Table 69 gives sizing analysis of classified feeds to a group of four sand tables; tabled slimes are usually about 95% <200-m. All tables yield concentrate, subject to final flotation of pyrite, but only the finer ones make tailing. Tables are decked with linoleum or rubber, with wooden riffle strips. Table 70 compares typical operating data on a sand and a slime table.

Table 65. Sizing-assay analysis of combined tailings from Deister-Overstrom fine-sand tables, Colquiri, Bolivia *a*

Mesh	Wgt., %	Sn, %	Sn distrib., %
>20	1.3	0.6	0.6
28	5.6	0.5	2.3
35	15.8	1.3	16.8
48	20.8	1.5	25.5
65	24.4	1.5	30.1
100	2.9	1.2	2.8
200	6.0	0.6	2.9
<200	23.2	1.0	19.0
	100.0	1.2	100.0

a For feeds see Table 64. See also Sec. 2, Fig. 152.

At BELDEN AMADOR MINES, Pine Grove, Calif., a No. 6 diagonal-deck table is in the grinding circuit to remove free gold and coarse pyrite prior to flotation (*PC*). Feed rate is 3 tons per hr. Au assays:

Table 66. Feeds to Diester-Overstrom primary slime tables, Colquiri, Bolivia (Sec. 2, Fig. 152)

Mesh	Three tables (from cone thickeners)			Five tables (from Dorr thickener)		
	Wgt., %	Sn, %	Sn distrib., %	Wgt., %	Sn, %	Sn distrib., %
>48	.....	.....	.....	4.5	0.6	2.1
65	2.5	2.0	6.5	13.0	0.6	6.1
100	2.5	1.6	5.2	5.1	0.6	2.4
150	5.5	0.9	6.5	25.0	0.8	15.6
200	12.0	0.7	11.0			
<200	77.5	0.7	70.8	52.4	1.8	73.8
	100.0	0.9	100.0	100.0	1.4	100.0

feed, 0.34 oz.; concentrate, 20.36 oz., tailing, 0.11 oz. Strokes, 290 @ 3/4 in. per min.; tilt, 3°; end slope, 1/16 in. per ft. A BARITE MILL at Cartersville, Ga., which makes the high-grade product on jigs, uses Deister-Overstrom tables to make a concentrate assaying about 90% $BaSO_4$ with no limit on iron, which is pulverized and sold for oil-well drilling mud (*148 A 277*). Table feed is deslimed, 6-m. roll

Table 67. Middling from four secondary Deister-Overstrom slime tables, Colquiri, Bolivia (Sec. 2, Fig. 152)

Mesh	Wgt., %	Sn, %	Sn distrib., %
>35	0.7	0.4	0.2
48	1.3	0.4	0.3
65	4.0	0.5	1.2
100	7.6	0.4	1.9
200	33.9	0.8	16.5
<200	52.5	2.5	79.9
	100.0	1.2	100.0

Table 68. Concentrate of Deister-Overstrom slime-cleaning tables (Sec. 2, Fig. 152)

Mesh	Wgt., %	Assay, *a*		Distribution, %	
		% Sn	% S	Sn	S
>28	0.7	15.2	33.3	0.1	20.1
35	1.8	35.0	18.1	1.1	28.1
48	3.0	61.8	4.3	3.2	11.1
65	8.6	65.2	1.6	9.7	11.9
100	8.8	65.2	0.7	9.9	5.3
200	35.1	58.1	0.5	35.3	12.6
<200	42.0	56.1	0.3	40.7	10.9
	100.0	57.6	1.2	100.0	100.0

a Other constituents: 0.7% Zn; 11.3% Fe; 2.0% insol.

product, and includes hutchwork from jigs; assay, 28 to 30% $BaSO_4$; dilution, 40% solids. Fourteen roughers make concentrate and tailing (5 to 12% $BaSO_4$); also middling, which is classified and fed to 8 cleaning tables. These make concentrate and return middling to the classifier. All tables have rubber decks and riffles. Strokes, 250 per min., are 1-in. on coarse, down to 5/8-in. on the finest table.

Capacity is 2.5 tons feed per hr. per table. Another mill in the same district is reworking <12-m. sand and slime from an old waste dump containing 20% or more of free and recoverable barite (*PC*). Classified feed goes to 8 No. 6 primary tables, of which the middlings are retreated on 4 similar tables. Combined output is about 3 t.p.h. of concentrate which, after eliminating iron and manganese magnetically, averages 94% $BaSO_4$. At a Florida PHOSPHATE mill (*PC*) a No. 6 diagonal-deck was run parallel with a Plat-O table on agglomerate feed (Sec. 12, Art. 30). Results are given in Table 71. Feed was 2 long tons per hr. to each table, and assayed 33.1%, B.P.L., 59.3% insol.

Table 69. Size analysis of feeds to diagonal deck sand tables, Potosí, Bolivia (Sec. 2, Fig. 153)

Mesh	Spig. 1	Spig. 2	Spig. 3	Spig. 4
20	2.1	.....	.....	.....
28	23.2	.....	.....	.....
35	37.8	3.5	.....	.....
48	22.9	14.0	.....	.....
65	9.9	22.6	4.8	.....
100	2.6	31.8	11.7	2.3
150	1.5	19.5	16.5	8.6
200	.....	5.1	15.6	17.2
<200 sand	.....	3.5	23.8	31.7
Slime	.....	.....	27.6	40.2
	100.0	100.0	100.0	100.0

T. L. HERBERT & SONS use 7 No. 7-C diagonal-deck tables for shape preparation of construction SAND and GRAVEL from material dredged from the Cumberland River at Nashville, Tenn. (*36 # 8 RP 60; 37 # 11 RP 26*). The tables are 7 ft. 10 in. wide by 17 ft. long. Each is divided by a transverse partition into 2 separate concentrating areas, each having its own feed and wash-water box; concentrate from the head-end area drops through rectangular slots in the deck close to the partition. Decks are covered with rubber, and rubber riffle strips are nailed. Adjustments are given in Table 72. Capacity of a gravel table, 25 t.p.h.; of a sand table, 18 to 25 t.p.h. Each table is driven, through V-belt and Overstrom head motion, by 3-hp. squirrel-cage motor, drawing about 1 1/2 hp. Wash and feed water for whole plant, about 3,000 g.p.m.

WEST-LAND SECURITY Co., Tarbutton, Tex., uses 10 No. 6 diagonal-deck tables for purification of GLASS SAND at the rate of 10 tons of finished product per hr. for the plant (*PC*). Raw sand is 98% <28-m. and contains 0.132% Fe_2O_3, of which the larger part is in material coarser than 20-m. Table feed is <28-m., deslimed at 100-m., and amounts to 83% of the plant feed. The tables reject 13.7%. Cleaned sand (69.3% of plant feed), analysing 0.054% Fe_2O_3, 0.73% Al_2O_3, 0.065% TiO_2, is immediately suitable for some purposes but requires an acid wash (reducing Fe_2O_3 to below 0.015%) before it can be used for flint glass.

Table 70. Deister-Overstrom No. 6 tables at Potosí, Bolivia (Sec. 2, Fig. 153)

Item	Sand table	Slime table
Rate of feed, met. tons per hr....	5–15	2–5
Water in feed, %.....	70	80
Speed, r.p.m.....	265	311
Stroke, in.....	5/8–7/8	3/8
Power, hp.....	1.5	1.0
Wash water *a*, gal. per hr.....	400–600	200
Attendance, tables per man *b*....	4	8
Aver. assay, % Sn:		
Feed.....	5.0	2.5
Concentrate.....	35.0	25.0
Middling.....	8.0	5.0
Tailing.....	0.7	1.5

a Usually clear, except when dry season requires large use of reclaimed water.

b Adjusting only tilt and wash water; stroke fixed.

Feed-pulp consistency ranges from 60 to 80% water. In SOUTHEASTERN MISSOURI work it was found (*96 J 57*) that pulp consistency was an important factor in obtaining a proper bed on the table, and the best consistencies were 10 : 1 (by volume) for coarse feed, 12 or 15 : 1 for medium sands, and 15 or 18 : 1 for slime.

Table 71. Deister-Overstrom *vs.* Plat-O table on Florida phosphate

Product	Deister-Overstrom No. 6				Plat-O			
	% Wgt.	B.P.L., %	Insol., %	Distrib. of B.P.L.	% Wgt.	B.P.L., %	Insol., %	Distrib. of B.P.L.
Conc.....	32	73.0	11.2	70.0	24	73.9	9.2	53.6
Middling.....	30	29.3	62.0	26.4	30	45.0	43.6	40.7
Tailing.....	38	3.2	95.4	3.6	46	4.1	94.9	5.7

Table 72. Sand and gravel washing tables, Nashville, Tenn.

Size treated, in.....	2~1 1/4	1 1/4~3/4	3/4~1/4	<1/4
Stroke, in.....	3/4	7/8	3/4	15/16
Speed, r.p.m.....	294	290	285	295
Longit. slope, deg....	2.5	2.5	0.8	0.0
Side slope, deg.....	5	4	1.75	4

20. GARFIELD TABLE

This is essentially a Wilfley table with riffles carried straight across from head motion to concentrate end over the full surface of the table. It is used exclusively for roughing service.

Construction. When specially built and not merely a Wilfley table with modified riffling, the deck is made rectangular, 4 ft. × 12 ft., and the head motion, although of the same type as the Wilfley, is sturdier in order to handle the heavier pulp loads. The table is frequently double-decked, the additional deck carried about 8 in. above the regular deck on heavy cast-iron stanchions attached to the

Table 73. Performance of Garfield tables

Mill	Kind of ore	Number of decks	Size of feed	Riffle cleats
Butte & Superior	Zinc	2	*a*	Maple
Chino Cons. Copper Co	Copper	1	*a*	.....
Ray Cons. Copper Co. *b*	Copper	1	*a*	Sugar pine
Ray Cons. Copper Co. *c*	Copper	1	*a*	Sugar pine
Ray Cons. Copper Co. *d*	Copper	1	.....	Sugar pine
Utah Copper Co	Copper	2	12-m.	Hardwood
Alaska Gastineau	Auriferous pyrite	2	*a*	Fir

Mill	Speed, r.p.m.	Stroke, in.	Tons per 24 hr. per deck	Wash water, g.p.m.	Horse-power	Water in feed, %
Butte & Superior	256	7/8	125	.....	1.5	.....
Chino Cons. Copper Co	260	1 1/8	200	3.4	1	60
Ray Cons. Copper Co. *b*	245	1	125	6.2	1	50
Ray Cons. Copper Co. *c*	245	1	125	10.5	1	50
Ray Cons. Copper Co. *d*	.....	.....	65	3.5	0.75	60
Utah Copper Co	.....	.....	100	.....	.....	.....
Alaska Gastineau	251	1	150	12	1	58

Mill	Assays, per cent.				Recovery, %	Attendance, machines per man
	Feed	Conc.	Tailing	Middling		
Butte & Superior	15.1	41.4	6.6	32	.....	48
Chino Cons. Copper Co	1.88	6.44*e*	1.32	.....	37.4	35
Ray Cons. Copper Co. *b*	1.26	4.20	0.84	.....	41.7	40
Ray Cons. Copper Co. *c*	0.97	5.0	0.53	.....	50.7	40
Ray Cons. Copper Co. *d*	0.72	6.0	0.45	.....	40.8	.....
Utah Copper Co	.....	.....	.....	.....	.....	.....
Alaska Gastineau	$1.25	$13.15	$0.347	.....	73.8	80

a See Table 73*a*.
b Primary.
c "Mill."
d Secondary.

Table 73*a*. Sizing tests of feed to Garfield tables in Table 73

Screen aperture, mesh	Per cent. weight on screen				
	Butte & Superior	Chino Consolidated Copper Co.	Ray Consolidated Copper Co., "Primary"	Ray Consolidated Copper Co., "Mill"	Alaska Gastineau
8	.....	.....	2.15	.....	.....
10	6.79	3.8	12.58	.....	7.08
14	19.86	7.3	11.54	.....	.....
20	17.70	8.3	9.95	2.92	30.94
28	12.61	8.3	11.23	13.91	11.70
35	11.21	7.9	9.80	11.33	4.84
48	7.49	5.5	5.89	6.87	5.56
65	5.13	5.8	5.10	4.64	5.60
100	4.08	6.4	5.17	6.44	5.58
150	3.22	5.6	2.87	3.43	1.88
200	1.15	3.4	2.71	3.60	5.16
<200	10.76	37.7	21.01	46.86	21.68

lower deck. Head motion for double-deck tables is twice the size and several times heavier and more rugged than the Wilfley motion. The riffles are deeper and wider than the Wilfley. At UTAH COPPER Co. (*112 J 415*) riffle cleats were 1.5 in. face to face, 3/4 in. deep at the head end tapering to 1/8 in. at

Table 74. Effect of tonnage on Garfield-table performance, Ray Consolidated Copper Co.

Size, mesh	Feed *a*								
	Weight, per cent.			Assay, per cent. Cu			Per cent. total Cu		
	1	2	3	1	2	3	1	2	3
>20	37.3	42.3	43.7	1.68	1.75	1.86	28.9	33.7	34.1
30	18.0	16.5	14.7	1.96	2.10	2.26	16.3	15.6	14.0
40	8.0	7.7	5.5	2.38	2.51	2.62	8.8	7.9	6.1
50	5.4	4.4	6.4	2.77	2.80	2.97	6.9	5.5	8.0
60	1.9	1.9	1.9	2.79	2.88	3.26	2.4	2.5	2.6
70	3.3	2.8	3.1	3.04	3.26	3.41	4.6	4.1	4.4
80	0.2	0.2	0.4	3.00	2.78	3.53	0.3	0.3	0.6
100	2.9	2.5	2.6	3.22	3.51	3.87	4.3	4.0	4.3
120	1.3	1.1	1.1	3.66	3.71	3.69	2.2	1.8	1.7
150	2.5	2.4	2.4	3.63	3.78	4.04	4.2	4.1	4.1
200	0.8	1.1	1.1	3.03	3.30	3.07	1.1	1.6	1.4
<200	18.4	17.1	17.1	2.35	2.45	2.61	20.0	18.9	18.7
Totals.....	100.0	100.0	100.0	2.10	2.28	2.38	100.0	100.0	100.0

Size, mesh	Concentrate								
	Weight, per cent.			Weight, per cent. Cu			Per cent. total Cu		
	1	2	3	1	2	3	1	2	3
>20	25.5	25.6	24.4	10.00	7.70	8.98	23.7	25.8	27.9
30	18.4	23.0	20.7	8.46	5.64	5.75	14.5	17.1	15.1
40	12.1	13.7	14.3	8.19	5.34	5.30	9.2	9.6	9.7
50	11.0	11.8	12.1	8.84	6.00	5.63	9.0	9.3	8.7
60	3.5	3.0	3.5	9.81	6.78	6.22	3.2	2.6	2.8
70	8.4	7.7	8.5	10.41	7.83	7.07	8.2	7.9	7.7
80	0.7	0.8	0.8	10.41	9.10	6.90	0.7	0.9	0.7
100	6.8	5.8	6.4	12.53	10.17	8.83	8.0	7.8	7.3
120	0.9	0.9	1.4	15.98	10.23	10.81	1.3	1.2	1.9
150	2.2	1.3	1.0	14.72	13.08	11.33	3.0	2.2	1.4
200	4.5	3.0	3.4	17.13	15.90	15.41	7.2	6.3	6.7
<200	6.0	3.4	3.5	21.30	20.72	22.24	12.0	9.3	10.1
Totals.....	100.0	100.0	100.0	10.80	7.85	7.72	100.0	100.0	100.0
Per cent. of original..	8.8	12.7	13.7	.....	.....	.....	.....	.....	.....

Size, mesh	Tailing									Recovery, per cent.		
	Weight, per cent.			Assay, per cent. Cu			Per cent. total Cu					
	1	2	3	1	2	3	1	2	3	1	2	3
>20	42.2	47.5	47.8	1.21	1.17	1.32	34.8	41.0	46.2	35.8	33.8	37.0
30	16.1	14.7	14.2	1.40	1.27	1.27	15.4	13.8	13.2	38.8	47.6	49.1
40	5.5	4.7	5.6	1.68	1.25	1.23	6.3	4.4	5.0	45.7	48.1	72.0
50	5.8	4.8	3.5	1.87	1.23	1.15	7.4	4.4	2.9	57.2	72.9	49.1
60	1.6	1.3	1.4	1.51	1.13	1.04	1.6	1.1	1.0	57.1	47.1	48.2
70	2.6	2.0	2.2	1.51	1.06	0.97	2.7	1.6	1.5	76.7	84.0	77.7
80	0.4	0.3	0.1	1.69	1.01	0.76	0.5	0.2	0.1	.....	.....	.....
100	2.3	1.8	2.1	1.50	1.06	0.85	2.4	1.4	1.3	80.2	85.4	76.8
120	0.9	0.7	1.1	1.58	1.05	0.85	1.0	0.5	0.7	26.6	25.3	.....
150	2.2	2.1	2.3	1.63	1.10	0.91	2.5	1.7	1.5	31.4		16.0
200	0.9	0.8	0.8	1.47	1.05	0.87	0.9	0.7	0.5	28.0	16.7	21.3
<200	19.5	19.3	18.9	1.84	2.02	1.89	24.5	29.2	26.1	26.1	21.4	24.0
Totals.....	100.0	100.0	100.0	1.48	1.37	1.33	100.0	100.0	100.0	45.3	43.7	44.4

a Test 1, 129 tons per 24 hr. Test 2, 91 tons per 24 hr. Test 3, 65 tons per 24 hr.

the line corresponding to the Wilfley diagonal, and extended thence to the concentrate side at uniform depth. The bottom face of the riffle cleats is beveled to allow the side faces to stand vertically at the steep inclination of the table. Riffle cleats are usually hardwood, maple or oak. Linoleum is the commonest deck covering but wears rapidly and in some mills cast-iron plates with riffles cast on are let in near the feed corner to take the excessive wear at this point.

Performances are given in Table 73. Average capacity on <2-mm. feed is close to 125 tons per deck per 24 hr. with 245 to 250 @ 1-in. s.p.m. Table 74 shows the effect of tonnage on performance. This test shows maximum recovery of grains between 0.15- and 0.2-mm. at all tonnages with a sharp drop in recovery in the sizes below 0.15-mm. Low recovery in the coarser sizes is apparently due to included grains. The efficiencies of the respective concentrating operations, based on copper contained in free mineral, were 73.3%, 79.5%, and 82.8%. By increasing speed and length of stroke, CHINO raised capacity to 200 tons per deck without marked loss in recovery as compared with RAY results. Since tailing is to be reground in any case, such overcrowding of the table would seem justifiable. SIDE TILT in roughing is usually held constant and variations in feed conditions are taken care of by varying the WASH WATER. Consumption of wash water ranges from 3.5 to 12 g.p.m. Dirty water is usually used. POWER CONSUMPTION is slightly higher than for the Wilfley table on account of the heavier bed of solids on the table; power consumed by double-deck tables is 25 to 33% in excess of that for single-deck.

21. PLAT-O TABLE

Description. Deck is 14 ft. 2 in. long, 7 ft. wide at head and 6 ft. wide at concentrate end, made in three types which differ in contour and riffling according to the size of material treated. DECK CONTOUR is such that two or more plateaus are formed, of increasing

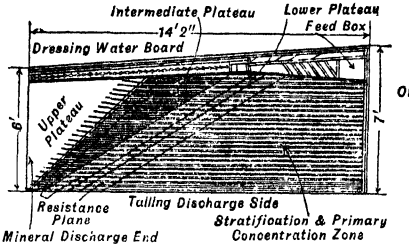

FIG. 62. Riffling of Plat-O table (Triplex; for coarse feed).

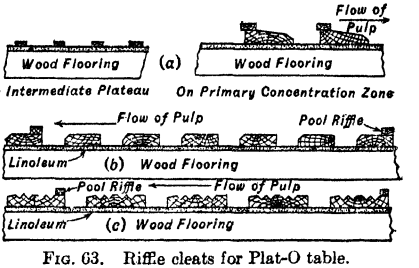

FIG. 63. Riffle cleats for Plat-O table.

elevation toward the concentrate end, joined by transversely diagonal slopes. Fig. 62 shows a 4-level table, for coarse feed; a 3-level form is used for ordinary sands, and a 2-level form for slime. Each plateau is $1/16$ to $3/8$ in. higher than its predecessor and is in the same plane as the tops of the riffle strips preceding it, the bottoms of the strips being tapered to fit the intervening inclined resistance planes. RIFFLE CLEATS (Fig. 63) are relatively wide and closely spaced. Item *a*, Fig. 63, is for the coarse-sand deck; *b* and *c* are used on the single-plateau tables; rectangular strip is sometimes used on the latter. Deck cover is either linoleum or rubber.

Head motion, Fig. 64, is totally enclosed, and submerged in oil to about half its depth. The roller *a*, free to rotate on its own center, is not concentric with the driving shaft and the pulley *b*. The oscillation thus produced is transmitted to the curved face of the rocker arm *c*, the outer end of which is pivoted on the pin *d*. The contact portion of this pin is also eccentric with its bearings; hence the position of the rocker arm may be shifted forward or backward (with effect on acceleration of stroke) by turning the pin (which can be done from outside). The toggle *e* transfers motion to the rocker *f*. The upper end of this rocker is slotted to receive a sliding block *g*, to which the connecting rod *h* is attached; length of stroke is adjusted by shifting position of *g* by screw *i*. Contacts are maintained, and forward stroke produced, by a helical spring hooked to the underpinning of the deck and adjustable, as to its tension, by a threaded rod connecting its other end to the foundation member at the concentrate end of the table. Manufacturer recommends strokes of $15/16$ in. @ 304 to 308 r.p.m. for the coarse-sand deck, $13/16$ in. @ 330 to 334 r.p.m. for the sand deck, and $3/4$ in. @ 346 to 350 r.p.m. for the slime table.

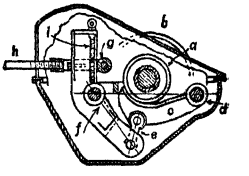

FIG. 64. Head motion for Plat-O table.

Rated capacities for ores are: Triplex, <$3/16$-in. feed, 50 to 150 t.p.d.; sand table, <30-m. sand, 30 to 40 t.p.d.; slime table, <80-m. feed, 15 to 30 t.p.d.

Suspended mounting. At one of the IDAHO-MARYLAND mills, Grass Valley, Calif., it became necessary to instal Plat-O tables on an elevated balcony, the floor of which had insufficient strength (*PC*). Each table, with its individual motor, was then mounted on a rectangular base composed of 2 longitudinal and 2 cross members, all of 12×12-in. timber. This base was suspended at 4 points by $1/2$-in. chains and $3/4$-in. eyebolts from 10×10-in. timber girders stiffened by 10-in. channels and resting on 10×10-in. posts about 20 ft. high, the latter standing on solid concrete floor. Oscillation of the hanging base, wholly unrestrained, was only $1/4$ to $1/2$ in.

Performance. Copper. At RAY CONSOLIDATED COPPER Co. a Plat-O rougher treating <5-mm. primary feed gave results shown in Table 75, indicating a consistent decrease in recovery and relative decrease in tonnage of concentrate with increase in feed tonnage. Grade of tailing is dependent rather on tonnage than on grade of feed while grade of concentrate is rather dependent on grade of feed and independent of tonnage treated. At the BURRO MOUNTAIN concentrator of Phelps Dodge Co. a Plat-O table treated flotation tailing deslimed in Allen cones at the rate of 39 tons per 24 hr. in a pulp containing 22% solids. Feed assayed 0.67% total Cu, 0.15 oxide; concentrate, 11.28% total Cu, 35% insoluble; tailing, 0.45% total Cu, 0.14% oxide. Recovery was 34.5% based on total Cu and approximately 42%, based on sulphide. At the same plant a roughing table treated 147 tons per 24 hr. of 14-m. feed in a pulp containing 45% solids. Feed assayed 2.14% total Cu, 0.26% oxide; concentrate, 14.66% Cu, 15.86% insoluble; tailing, 1.20% total Cu, 0.23% oxide. Recovery of total Cu was 47.8%, sulphide about 52%. At the Phelps Dodge MORENCI mill (*IC 6460*) in 1929, 40 Plat-O tables were treating primary ore (nominally <6-m.) at 143 t.p.d., producing concentrate at ratio of 1 : 50.64 and delivering entire residue to flotation. Assays in % total Cu: feed, 1.92; concentrate, 19.59 (or 20.2% recovery);

Table 75. Performance of Plat-O rougher at Ray Consolidated Copper Co.

Tons of feed per 24 hr.	Assays, per cent. Cu			Recovery, per cent.	Ratio of concentration
	Feed	Concentrate	Tailing		
137	1.39	14.4	0.82	43.5	23.8
190	1.16	13.9	0.78	34.7	34.5
210	1.17	12.7	0.82	32.0	34.0
214	1.26	12.8	0.89	31.5	32.2
243	1.25	12.7	0.90	30.2	33.7
287	1.29	13.9	0.93	29.9	36.1
312	1.29	13.6	0.96	27.5	38.3

Table 76. Performance of Plat-O table at Anaconda

Test period	Feed, % Cu	Concentrate,		Tailing, % Cu	Recovery, %	Speed, r.p.m.	Stroke, in.
		% Cu	% Insol.				
1	2.62	6.03	38.0	1.56	54.6	240	3/4
2	2.64	6.65	31.3	1.22	64.9	240	3/4
3	2.38	6.16	33.4	1.09	65.9	280	7/8
4	2.17	6.71	26.5	1.02	62.5	280	7/8
5	2.38	7.00	23.4	1.00	67.6	280	7/8
6	2.49	6.98	26.4	1.10	66.3	280	7/8
7	2.41	7.17	18.4	1.13	63.0	280	7/8
8	2.23	6.50	24.9	1.00	63.4	280	7/8

Notes to Table 76. Feed rate 80 tons per 24 hr. of 8-mesh feed. Periods 1 and 2: Deck with 3 plateaus, riffled as shown in Fig. 62, no longitudinal slope, transverse slope 3/4 i.p.f. Period 3: Cap riffles 1/8 in. high on top of main riffles for 4 ft. back of first rise, 1/16-in. cap riffles on intermediate plateau. No longitudinal slope, 7/8 i.p.f. transverse. Periods 4 to 8, incl.: Upper plateau removed. Riffles extended from second rise 3/16 in. high to concentrate-discharge end, 1/8-in. cap riffles as above. Feed box 5 ft. 6 in. long. No longitudinal tilt, transverse 1 1/8 i.p.f.

tailing 1.56. Of the concentrate, 44% was 28~100-m., with 5.3% <200-m. Tables were driven by individual 1-hp. back-geared motors. Results of eight weekly test periods at ANACONDA roughing 8-m. feed are given in Table 76. Increasing speed in this test and placing cap riffles on top of the main riffles cut down the grade of tailing while increase in side slope reduced the amount of insoluble in concentrate. At INTERNATIONAL NICKEL Co., Copper Cliff, Ont., the entire <35-m. tailing from the

Table 77. Performance of Plat-O table at Connecticut Zinc Corporation, Oronogo, Mo.

Test number	Feed			Concentrate		Tailing		Middling	
	Tons per 24 hr.	Zn, %	Pb, %	Zn, %	Pb, %	Zn, %	Pb, %	Zn, %	Pb, %
1	18.2	3.85	0.12	55.10	1.30	1.48	0.051	3.08	0.09
2	31	3.35	0.064	58.40	0.82	0.84	0.020	4.74	Tr.
3	18.2	3.42	0.065	58.30	0.67	0.83	Tr.	4.50	0.044
4	22.5	4.12	0.052	57.50	3.30	1.65	0.027	2.60	0.036
5	22	3.45	0.065	57.40	0.32	1.23	0.010	2.94	0.020

Notes to Table 77. Test 1: Feed varied from very coarse to fine slime. Test 2: Feed very coarse. Test 3: Feed coarse and fine, typical <60-m. material in feed assayed 5.42% Zn; in tailing, 2.07% and in concentrate, 58%. Lead concentrate in this test assayed 64.50% Pb, 5.60% Fe, and 9.40% Zn. Test 5, <60-m. material in feed assayed 5.23% Zn, in tailing 2.77% and in concentrate 55.50%. Wash water 3.25 g.p.m. Tonnage of middling return, 12.5 per 24 hr.; length of middling discharge, 42 in.

8,000-ton mill, after the final stage of differential-flotation, passes over a battery of 48 Plat-O tables (*130 J 465*). These recover a low-grade Ni-Fe-Cu concentrate for retreatment, and discharge tailing assaying 19.70% Fe, 4.95% S, 44.25% SiO_2. Each table has an independent 3-hp. motor, with short Tex-rope drive; 265 @ $^{15}/_{16}$-in. s.p.m.

Table 78. Feed to primary Plat-O tables, Colquiri, Bolivia

Mesh	Classifier feed		Spig. 1	Spig. 2	Spig. 3	Spig. 4	Spig. 5	Spig. 6
	Wgt., %	Sn %						
>14	4.4	1.6	10.0	4.0	6.0	0.0	0.0	0.0
20	14.6	2.2	20.0	9.5	3.0	1.0	0.0	0.0
28	15.6	1.6	26.0	20.0	9.0	4.0	1.0	0.0
35	15.8	2.7	17.0	20.0	16.0	9.0	3.0	1.5
48	12.8	2.6	11.0	16.0	14.0	16.0	7.0	3.0
65	11.8	2.4	7.0	13.0	20.5	22.0	20.0	9.0
100	7.2	3.0	5.0	8.5	15.0	22.0	25.0	18.5
200	12.6	3.1	3.0	8.0	13.5	22.0	36.0	56.0
<200	5.2	4.7	1.0	1.0	3.0	4.0	8.0	12.0
	100.0	3.0 *a*	100.0	100.0	100.0	100.0	100.0	100.0

a By head assay.

Zinc. Performance of a sand table in finishing service at the CONNECTICUT ZINC CORPORATION plant at Oronogo, Mo., is presented in Table 77. This table had the single plateau with thin riffle cleats extended to the concentrate-discharge end. The table was very stable in operation, handling fine material as well as coarse at a given setting and requiring but little attention.

Table 79. Products of Plat-O tables, Colquiri, Bolivia

Table no.	Concentrate		Middling No. 1		Middling No. 2		Tailing	
	% Sn	% S	% Sn	% S	% Sn	% S	% Sn	% S
1	16.0	27.0	4.8	21.0	0.8	3.4	.....	.....
2	26.2	24.1	16.8	25.4	3.0	24.7	.....	.....
3	45.6	13.6	5.7	27.1	0.9	15.9	.....	.....
4	22.6	27.6	1.9	25.4	0.8	14.7	.....	.....
5	38.2	19.4	1.4	26.1	0.4	5.0	.....	.....
6	38.8	20.3	1.5	27.5	0.3	5.6	0.3	1.5
7	11.8	35.3	1.1	26.4	0.5	7.2	0.3	1.1
8	18.4	31.9	1.5	28.6	0.4	10.1	0.3	0.8
9	14.3	33.4	1.5	30.5	0.5	8.7	0.4	1.1
10	30.8	24.3	2.4	32.6	0.9	18.0	0.4	5.7

Lead-zinc. At SAN FRANCISCO DEL ORO 1,100 met. t.p.d. is treated after ball-milling but without classification at <14-m. and 75% solids on 9 standard, single-deck Plat-O tables, from which the middling is re-treated on 2 tables of the same type; all tailings are further reduced to flotation size; table concentrate from feed assaying 7% each of Pb and Zn averages 72% Pb, and amounts to 40% of the lead in the ore (*137 J 397*). Such removal of coarse lead concentrate and subsequent mixing thereof with flotation concentrate aids in reducing moisture in filtration. Tailing averages 4.5% Pb. The tables have concrete decks and pine riffles. Speed, 260 @ 3/4-in. s.p.m. Power, 0.8 hp. per table; wash water, 10 g.p.m. One man attends all tables. At the MIDVALE plant, of U. S. S., R., & M. Co., flotation tailing is scavenged, after classification, on twenty 6×14-ft. single-deck Plat-O tables (Q). Feed is 37% <200-m., and carries about 80% water; rate of feed, about 6 t.p.h. per table. Deck has rubber top and wood riffles. Speed, 250 @ 1/2-in. s.p.m.; lateral slope, 1/2 in. per ft. Wash water, 600 g.p.h. Power, 1 hp. per table. Lost time averages 1%, due chiefly to head motion.

Table 80. Screen assay of combined middling No. 2, Table 79

Mesh	Wgt., %	Sn, %	Sn distribution, %
>14	11.4	0.9	11.6
20	16.8	1.2	22.7
28	18.0	1.0	20.3
35	11.2	0.4	5.0
48	8.4	0.9	8.5
65	13.8	0.9	14.0
100	5.4	0.6	3.6
200	9.6	0.7	7.6
<200	5.4	1.1	6.7
	100.0	0.9	100.0

Tin. In the COLQUIRI mill of Cia. Minera de Oruro, 10 Plat-O 14-ft. tables treat classified feed, to a maximum size of 2-mm., at a combined rate of 185 t.p.d. (Q). Feed averages 3% Sn. See Sec. 2, Fig. 152 for flow-sheet. Tables 78, 79, and 80 give size and assay data. All tables have linoleum decks and wood riffle strips. The 10 primary tables operate at 254 r.p.m.; 5 secondary tables, at 279 r.p.m.; power, 1 hp. each. One man attends 5 tables, adjusting wash water and product cuts.

At the CHAUPI mill of Cia. Minera del Cerro de Potosí, Bolivia, four 14-ft. Plat-O tables in parallel with four Deister-Overstrom No. 6 sand tables treat deslimed hydraulically classified sands at a maximum size of about 20-m. (*Q*). See Sec. 2, Fig. 153. Feeds are identical with those for the diagonal-deck sand tables shown in Table 69 and average 5% Sn. Rate of feed averages 10 t.p.h.; water in feed, 70%. Concentrates average 35%; tailings, 0.7%; middlings, 8% Sn. Tables make 311 @ 3/4-in. s.p.m., requiring 1 1/2 hp. each. Wash water, about 500 g.p.h. One man attends 5 tables, adjusting only tilt and wash water (speed fixed).

Barite. At Cartersville, Ga., <14-m. material is treated on Plat-O tables, making a concentrate which, after a final magnetic separation, averages 95% $BaSO_4$ and less than 1% Fe (*A TP 973*). Feed comes from two Fahrenwald 6-spigot classifiers; each of the first 3 spigots of the first feeds a roughing table while the other 3 spigots combine to feed a slime table; the first 2 spigots of the second classifier feed 2 roughing tables and the other 4 a slime table. Output of the 7 tables is 25 to 45 tons of concentrate per 10 hr., depending on richness of feed, which ranges from 40 to 70% $BaSO_4$. All middlings are circulated without further classification. Tailing usually carries less than 7% $BaSO_4$, mainly in the form of included grains. The first spigot product of each classifier is treated on a triplex table, all other tables are simplex; all with rubber deck and wooden riffles. Stroke of the triplex table, 1 1/8 in.; others shorter; all speeds, 280 r.p.m.

22. OPERATION OF SHAKING TABLES

Applicability. A separation can be made on shaking tables between any two minerals or substances that differ in specific gravity to an appreciable extent, but unless the concentration criterion is greater than 1.25, separation by reason of specific gravity alone is relatively crude and imperfect; 2.5 or more is sufficient for rapid treatment and substantially complete recovery. When there is a decided difference in shape of particles as, for instance, exists in the case of coal and slate, the heavier particles in this case being tabular while the light are rounded, separation is aided thereby and can be successfully performed even down to a concentration criterion of substantially 1.0. Thus with fine beach gravel consisting of quartz pebbles and oyster-shell fragments, a table discharges the shell over the tailing side while the quartz goes to the concentrate end. Particles of the same specific gravity but of different sizes, all very fine, can be separated to a certain extent, thus removing accidental grit from finely ground abrasives or washing small quantities of slime from granular products.

Table 81 after Fahrenwald and Meckel (*RI 2949*) reports laboratory tests in concentrating variously prepared artificial two-mineral mixtures on a 12×30-in. Wilfley table. Tests 2 to 6 incl. show that when size alone is depended upon for separation, the smaller the proportion of the smaller size present the better. Tests 7 to 11 incl. indicate that separation by size of rounded materials improves as the spread in size between "concentrate" and tailing decreases. This is not in accord with usual experience, and the indication should be checked before action thereon. Test 12 indicates that shape is an appreciable factor and that in a mixture of round and angular grains of the same material, the angular rise to the surface of a shaken bed; this is analogous to the shell-gravel separation above cited. Test 15, taken with 12, shows the advantage, when separating at the same sp. gr., in having the concentrate mineral somewhat smaller as well as more equiaxed than the tailing. Tests 16 and 17, taken with 13, are in accord with general experience that in ordinary gravity separations on a table it is advantageous to have the heavy mineral smaller than the light; the difference in indicated efficiency between tests 16 and 18, in the latter of which the concentrate mineral was the larger, is less than would be expected by experienced table operators. A part of the difficulty is not improbably due to the method of calculating efficiency for the present tests. Tests 19 and 20 are cumulative. Test 21 taken with test 16 simply adds further confusion to a controvery that has continued intermittently for years, *viz.*, whether classified or sized feed is better for tabling. See p. 86.

Size of feed. It is essential that particles settle into the bed in order to be collected as concentrate, hence the lower size limit is determined by the velocity of the cross water and by the movement of the table. The necessary water velocity depends on the size of the particles that are to be washed out. No established mathematical relationship exists for determination of the smallest size of concentrate particle and largest size of tailing particle that can be treated together. It depends, of course, on the relative specific gravities and shapes of particles, the nature of the table surface, character of feed, and other more or less indefinite factors.

Wiggin determined that chalcopyrite smaller than 0.025-mm. could not be treated economically on shaking tables at ANACONDA. Bland found that in treating tungsten slime, 40% of the concentrate would pass a 0.0125-mm. screen when feeding pulp containing 29% solids at 2.4 tons per 24 hr., while all of this material was lost when a pulp containing 8% solids was treated at 4.8 tons per 24 hr. Beringer (*24 IMM 411*) investigated the effect of shake on the settling rate of cassiterite by fastening to a Buss table 2-oz. phials containing cassiterite grains of various sizes suspended in water and noting the time required for the grains to settle. With the table making 270 @ 3/4-in. s.p.m., 0.045-mm. particles settled in 60 sec., 0.035-mm. in 90 sec., 0.030-mm. in 120 sec., and 0.025-mm. in 150 sec. Corresponding sizes with the tables at rest were 0.025-, 0.020-, 0.015- and 0.010-mm. The average minimum size of grain in Buss-table concentrate was 0.05-mm. Johnson and Heinz (*107 J 553*) report sizing

Table 81. Concentration tests on laboratory Wilfley table (*RI* 2949)

Test No.	Constant factors	Variable factors	Concentrate material *b*	Tailing material	Concentrate size *a*	Tailing size *a*	Size ratio	Max. effic. of separation *c*
2	Sp. gr. & shape (angular).....	Size	20% crushed quartz	80% crushed quartz	48~65	20~28	2.82	58.4
3	do.	do.	40% do.	60% do.	48~65	20~28	2.82	29.4
4	do.	do.	50% do.	50% do.	48~65	20~28	2.82	27.9
5	do.	do.	60% do.	40% do.	48~65	20~28	2.82	36.5
6	do.	do.	80% do.	20% do.	48~65	20~28	2.82	26.6
7	Sp. gr. & shape (rd.).....	do.	Rd. quartz *b*	Rd. quartz	60~65	20~24	3.38	42.0
8	do.	do.	do.	do.	48~60	20~24	2.82	54.6
9	do.	do.	do.	do.	42~48	20~24	2.37	78.9
10	do.	do.	do.	do.	32~35	20~28	1.56	71.9
11	do.	do.	do.	do.	28~32	20~24	1.42	85.9
12	Size & sp. gr.....	Shape	Rd. quartz	Crushed quartz	20~28	20~28	1.00	59.9
13	Size & shape	Sp. gr.	Magnetite	Rd. quartz	48~60	48~60	1.00	89.6
14	do.	do.	Galena	Siderite	48~60	48~60	1.00	90.8
15	Sp. gr.....	Size & shape	Rd. quartz	Crushed quartz	48~60	42~48	1.19	82.4
16	Shape (rd.).....	Size & sp. gr.	Magnetite	Rd. quartz	48~60	20~24	2.83	93.9
17	do.	do.	do.	do.	48~60	35~42	1.42	92.6
18	do.	do.	do.	do.	48~60	60~65	0.84	89.4
19	Shape (angular).....	do.	Galena	Siderite	60~65	16~20	4.00	91.8
20	do.	do.	do.	do.	24~28	48~60	0.42	80.6
21	Size.....	Shape & sp. gr.	Magnetite	Crushed quartz	48~60	48~60	1.00	94.4
22	None.....	Size, shape, & sp. gr.	do.	do.	60~65	20~24	3.38	95.1

a Tyler standard mesh.

b In tests 7 and below, all mixtures contained 20% of the "concentrate material."

c Side discharge was caught at 15 points, each fraction analyzed (by sizing, or by other means when components were of same size), and cumulative percentage of each component was plotted against sample point, beginning at the head end. Maximum efficiency of separation was indicated at the point where the two curves showed widest divergence. *At that point*, efficiency E was calculated by the formula: E = (% conc. mineral in conc.) + (% tailing mineral in tailing) − 100.

tests on blende tailing in the JOPLIN DISTRICT, showing 2.7% zinc in the sand between 0.833- and 0.295-mm., 2.2% in that between 0.295- and 0.147-mm., and 9.4% in the material passing a 0.147-mm. screen. Similar results reported by Wright (*TP 41 USBM*) are given in Table 82. As a general rule, it may be stated that the granular or sandy portion of material passing a 200-m. (0.074-mm.) screen is readily settled to a shaking-table deck and moved along by the table motion and that good recoveries can be made on such material if the accompanying gangue is not so coarse as to require excessive wash water or excessive tilt to remove it. Watt (*57 A 371*) states that reciprocating (shaking) slime tables do excellent work saving galena coarser than 300-m. and make good recovery of finer galena. In a test on a feed in which 94% of the lead passed a 200-m. screen, the concentrate assayed 76% lead and represented a recovery of 65%; 89% of the lead in the concentrate would pass 200-m.; 98.5% of the lead in the tailing would pass 300-m. Caetani (*3 MM 50*) concluded from testing work at BUNKER HILL & SULLIVAN that on such material reciprocating tables will do better work than vanners. Luyken (*66 G 155*) presents Fig. 65 relating to concentration of 2.5~0-mm. spathic iron ore on a Hercules riffled table. Products at eight zones (No. 1 at head end) along the discharge side were separately screen-sized and analyzed; the ordinates represent relative quantities of iron in the several fractions. The results are completely consistent with Figs. 46 and 47.

Table 82. Sizing-assay test on Joplin table tailing

Mesh	Weight, %	Assay, % Zn	Total zinc, %
>3/8-in.....	15.22	0.77	12.25
3-mm.....	47.56	0.96	47.61
1.5.....	23.96	0.76	18.95
0.46.....	10.41	0.71	7.68
<0.46-mm..	2.84	4.55	13.51
Totals....	99.99	0.96	100.00

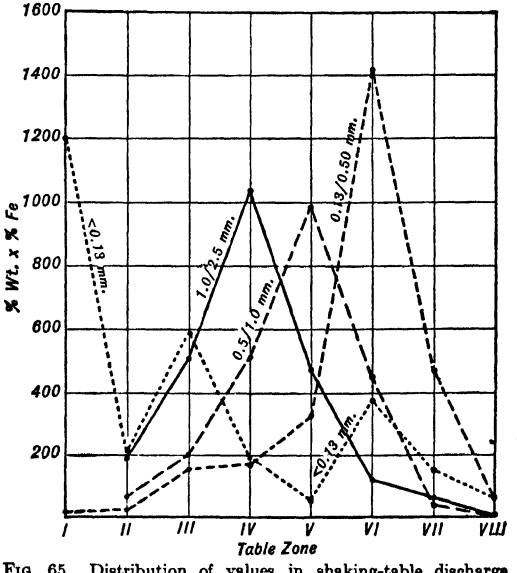

FIG. 65. Distribution of values in shaking-table discharge (feed, unsized spathic iron ore).

Upper size limit is as indefinite as the lower. On tables that pass concentrate across a smooth cleaning plane it is practically impossible to make clean concentrate and finished tailing when the particles are larger than 2-mm., and difficult when they are larger than 1-mm. Full-riffled roughing tables will treat unsized ore material passing a 3/8-in. aperture and deliver a small band of clean coarse concentrate along the upper riffles, and a considerably impoverished tailing between the forward edge of the slime streak and the corner of the table deck. In the great majority of plants treating base-metal ores, roughing-table feed has passed a 2- or 2.5-mm. screen. (See also Table 84.)

Preparation of feed for shaking tables. There has been much discussion on this point. Bibliography of the principal experimental work and discussion is: Richards (*38 A 556*), Bland (*107 J 1112*), Hancock (*24 MM 87*), Cox, Porter, and Gibbon (*14 CMI 490*), Ellis, Table 83 (*7 MMt 156*), Luyken (*26 ME 297; 66 G 155*), and Fahrenwald and Meckel (*RI 2949*). Professor Richards concluded from laboratory tests on artificial mixtures that performances on sized and on classified feeds (both superior to natural) were substantially a setoff, but that with perfect classification the classified feed would be superior. This is the indication of Figs. 46 and 47. Table 83, after Ellis (*7 MMt 156*), presenting results on Coeur d'Alene ore, would justify very little expense for any preparation other than desliming.

The weight of mill opinion is overwhelmingly in favor of classified feed for close work; the contrary opinion is largely based on tests such as those of Richards and of Fahrenwald in which there is no locked middling present. In laboratory testing, usually with much less crowding for capacity than in the mills, and with concentration criteria usually 2 or 2.5 and larger, good separations are readily made; but with middling present and the controlling concentration criteria to be contended with those between pure concentrate mineral and a heavy middling, and between a light middling and tailing, the separation demanded is much more difficult, and the more favorable conditions prevailing with classified feeds must be employed. Furthermore, close fine sizing, as was practiced in the

Table 83. Comparison of classified, sized, and natural feeds for shaking tables (*After Ellis*)

Feed	Classified		Screen-sized		Natural	
Tons per 24 hr....	4.15		4.46		4.22	
Product	Pb, %	Ag, oz.	Pb, %	Ag, oz.	Pb, %	Ag, oz.
Feed.....	21.4	7.0	21.6	7.2	21.2	7.1
Concentrate.....	81.8	24.5	74.7	24.0	73.2	23.5
Middling.....	16.0	6.9	13.9	5.0	13.5	4.9
Tailing.....	1.4	0.7	1.6	0.9	1.9	0.9
Recovery.....	95.1	92.7	94.6	90.9	93.4	90.8

laboratory tests. cannot be done in the mills as cheaply as classification; cannot, in fact, be done economically at all.

SOUTHEAST MISSOURI lead-mill practice and that of the BOLIVIAN tin mills are representative of modern procedure when gravity concentration comprises all or a large part of the recovery scheme. Table 84 summarizes operating data at a number of Missouri lead mills. Sec. 2, Fig. 100, gives data on feed sizes and preparation. Sec. 2, Figs. 151 to 154, should be consulted for table operation in Bolivia.

Subsequent to the preceding discussion, elaborate test work at MIAMI and INSPIRATION in 1912 and 1913 showed that careful treatment of natural feed on roughing tables with subsequent enrichment of the rough concentrate after classification yielded better metallurgical results, and would certainly yield better economic results, than most careful and elaborate preparation of the whole feed by classification prior to tabling. With ores adapted to concentration by flotation, there can be no doubt that classification of the original table feed is wholly unnecessary from a metallurgical standpoint and is uneconomic; limiting the upper size of roughing-table feed by means of a screen or a mechanical classifier is all that is necessary.

Table 84. Table operating data, St. Joseph Lead Co., 1938 (*Q*)

	Bonne Terre	Leadwood	Desloge	Federal	Mine la Motte
No. of primary tables.....	39	96	39	.....	.....
Feed, tons per hr. per table.....	usual 0.93 max. 1.40	3–10	1.40	2–10	3
Max. size of feed, in.....	0.095	0.102	0.075	0.120	0.147
Water in feed, %.....	65	65	60	65	65
Strokes per min.....	275	265	260	280	290
Length of stroke, in.....	3/4–1	3/4–1 1/16	9/16–1	5/8–3/4	3/4
Power per table, hp.....	1	1–1.25	1	1	2.25 *l*
Wash water, gal. per min.....	15	30	15–50	30	30
Attendance *b*, tables per man...	36	55	65	72	12 *a*
Per cent. lost time.....	<1	<1	<0.5	Negl.	<1
Chief cause of lost time.....	Repairs & chokes	Broken belt	Mechanical	Broken belt	Broken belt
Assays, %Pb:					
Feed.....	4.28	1–5	Var.	1–8	1–8
Concentrate.....	78.75	80	76	78	80
Tails.....	0.18	0.10	0.16	0.16	0.14
Middling.....	Var.	10–20	Var.	15±	Var.

a Part time.
b Making all necessary adjustments except speed, which is fixed for all tables.
l Installed.

Shortly after the adoption of flotation, the swing of practice eliminated gravity concentration from the mills almost entirely. Subsequent experience proved this wise for ores in which readily flotable minerals were finely disseminated. But at mills treating coarsely disseminated ores with large concentration criteria, scalping out concentrate by gravity concentration is now preferred practice. In this work, since tailing is to be re-treated in any event, natural feeds are treated, often with preliminary desliming to prevent dilution of flotation feed. Yet more recently, development of sink-float operation with heavy suspensions to scalp off tailing at coarse sizes has been adopted at a number of plants treating ores favorable to such concentration (see Art. 30).

Capacity of full-riffled tables in ROUGHING service is 100 to 200 tons per 24 hr. on feed through 2- or 2.5-mm. screens. It may be pushed to 300 tons with a feed as coarse as 4-mm. maximum, but at considerable sacrifice of recovery. CLEANING rough concentrate

from full-riffled tables, practically any of the usual sand tables will treat from 40 to 75 tons per 24 hr. When feed is coarse, riffles extended to the concentrate-discharge end will aid in keeping up capacity. Treating CLASSIFIED OR DESLIMED FEED and making both clean concentrate and tailing, capacities range from about 10 tons per 24 hr. on 0.5-mm. material to 40 to 45 tons on 1.5- to 2-mm. feed. In general, the CAPACITY ON LEAD ORES will be higher than on copper or zinc. These same tonnages will apply to recovery of auriferous pyrite from quartz sands, but this is essentially roughing service, as retreatment of tailing by cyanidation is always contemplated and frequently the concentrate is also cyanided.

Table 85. Effect of size of feed on capacity, recovery and grade of concentrate, Joplin ore

Table number	Size of feed			Assays, % Zn			Recovery, %	Operating data	
	All pass, . . mm.	Per cent. on following screen	Per cent. through 0.074-mm.	Feed	Concentrate	Tailing		Speed, r.p.m.	Stroke, in.
1	2.36	0.40	2.48	4.83	58.2	0.88	83.1	239	1
2	0.59	36.55	2.08	4.70	61.8	0.66	86.9	242	1
3	0.59	15.73	3.96	5.0	58.78	0.78	85.8	242	1 1/8
4	0.59	4.21	5.98	4.78	53.92	0.57	89.0	243	7/8
5	0.59	1.0	8.30	5.0	58.0	1.03	80.8	245	1
6	0.29	5.04	17.02	5.22	54.05	1.50	73.3	245	3/4
7	0.59	0.16	13.18	5.01	55.44	1.16	78.5	270	9/16
8	0.59	0.45	14.75	5.07	45.16	1.37	75.0	270	9/16
9	0.59	1.04	8.71	5.17	49.6	1.66	70.2	274	5/8
10	0.29	0.70	26.29	5.55	50.82	1.90	68.3	276	3/4

Note. In all cases but No. 9 the tailing was noticeably coarser than the feed. In 1, 5, 8, 9, and 10, more than 30% of the total zinc loss was in <200-m. material. Feeds were successive spigot products and final overflow of a series of 9 hydraulic spitzkasten. Tonnage per table ranged from about 20 per 24 hr. on table 1 to 2 tons per 24 hr. on No. 10.

SLIME TABLES in finishing service treat from 3 to 6 tons each per 24 hr.; roughing auriferous pyrite from quartz, the capacity rises to from 10 to 15 tons, and treating flotation tailing (also essentially roughing service) from 30 to 60 tons per 24 hr. per deck is handled in some mills. Results of tests on Joplin ZINC ORES (*57 A 456*) are shown in Table 85.

Speed and stroke are properly related, a low speed and long stroke being suitable for coarse feeds and the reverse for fine, but in the examples cited in the preceding pages, which comprise a fairly representative cross-section from practice, this relation is decidedly obscure. On the other hand Wright (*TP 41 USBM*) gives results shown in Table 86 to illustrate the effect of wrong *vs.* right stroke length and speed. The average in roughing service is: Garfield, 256 @ 1-in. s.p.m.; Butchart, 261 @ 7/8-in. In sand-finishing service; Butchart, 274 @ 7/8-in.; Wilfley, sands coarser than 1-mm. maximum, 255 @ 7/8-in.; sands finer than 1-mm. maximum, 249 @ 3/4-in.: in slime service, 273 @ 1/2-in. Wright gives practice in Joplin district as follows: Coarse feed (1.5- to 2-mm. limiting), 220 to 240 @ 3/4-in. to 7/8-in. strokes; medium sands, 240 to 260 @ 5/8- to 3/4-in.; fines, 250 to 280 @ 1/2- to 5/8-in.; ungraded feed through 1.5- or 2-mm. screen, 230 to 250 @ 3/4- to 7/8-in., depending on rate of feed. He states that if stroke length or speed is too low, galena packs in the riffles at the head-motion end of the tables and gradually works down into the tailing. Study of details in the various examples of operation, however, shows that variations from the averages are in all cases so great as to throw individuals of any one class into another class. The stroke for slime tables must be much sharper than for sand on account of the greater relative tendency for fine particles, once in contact with the deck surface, to stick. Stroke should, therefore, be correspondingly short in order to prevent agitation of the mass of pulp on the table, whereby settlement is prevented.

Table 86. Tests on effect of speed and stroke length on zinc ores

Test No.	Rev. per min.	Stroke, in.	Feed, % Zn	Tailing, % Zn
1	220	3/4	9.25	0.9
	175	1 1/4	9.25	3.05
2	244	7/8	7.75	1.25
	224	1/2	7.75	3.20

Water consumption in roughing service ranges from about 50 to 350 g.p.t. treated; in finishing service on sands it is usually between 300 and 400 g.p.t., on slimes from 600 to 3,000. Water and transverse slope are interdependent and both are dependent on the size of feed. The requirements are that solids shall settle in the riffles, that the pulp be sufficiently fluid to allow stratification, and that there be sufficient velocity of cross flow to

carry off the upper strata as the riffle support is withdrawn. Granular pulps containing 25% solids and slime pulps containing as high as 30% are sufficiently fluid to allow stratification and are sufficiently lively in the riffles, hence feed pulps may be of these consistencies. Wash water must be supplied in sufficient quantity to form a freely moving film on the deck deep enough to cover the largest particles. Beyond this point transport of material may be gained either by increasing volume at the same slope or increasing velocity by increasing slope. To increase transporting power by increasing slope is economical of water, but it narrows the bands of the various products at the concentrate end and makes accurate splitting difficult. This is allowable in roughing practice, which employs steep slope and minimum water, but when clean products are desired, as in finishing practice, more water is used. Water consumption in slime treatment is exceptionally high on account of the fact that the tonnage of slime per table is low, a certain minimum amount of water is necessary to keep a uniformly moving film flowing, and finally fine particles adhere tenaciously to smooth deck surfaces and require prolonged washing to remove them.

Power consumed averages close to 0.6 hp. per single-deck table and that installed between 0.75 and 1 hp., except that the Garfield table under heavy loads consumes close to 1 hp. Double-deck tables require from 50 to 75% more power than single-deck.

Attendance averages about 30 tables per man in finishing service and 50 in roughing service but as many as 135 tables per man in finishing service are reported from one mill (CALUMET & HECLA) and 106 at another. The number of tables that one man can run depends, of course, on the difficulty of the job. The most difficult service is making finished tailing and concentrate on sand tables with fluctuating feed. The operator in such service must continually change transverse tilt, wash water, and (if possible) the position of the product splitters. In roughing service with full-riffled tables the tilt may be fixed, if the feed supply is steady, wash water is rarely changed, and control is effected almost entirely by shifting the product splitters. In this case one man can attend almost any number of tables, the practical limit being the number that he can keep properly lubricated and running.

Lost time practically never exceeds 1% of possible running time. The principal cause is renewal of riffling and deck covering. In heavy roughing service softwood riffle cleats may last only 1 or 2 weeks and linoleum the same number of months but lost time is cut down by use of hardwood or metal-protected riffles and rubber or concrete decks or metal plates inserted near the feed box, at the point of greatest wear. In ordinary service softwood riffle cleats will last from 6 months to a year or upward and a linoleum deck for 2 to 4 years. If head motions are of proper size and protected from grit they will last almost indefinitely with occasional re-babbiting of bearings and replacement of renewable wearing parts.

Riffling. The principles underlying correct riffling are as follows: Riffles must be deep enough at the head end to bed and protect all material in the feed that can settle out of suspension in the cross flow of feed water, in order to give opportunity for stratification. They must decrease gradually in depth toward the concentrate-discharge end to permit gradual shearing off of the impoverished upper layers by the cross flow of wash water. If the surface is unriffled at the concentrate end, the termination of the riffles should lie along a diagonal line extending from a point near the corner formed by the tailing side and concentrate end to a point on the feed side one-fourth to one-half the distance toward the concentrate end. Such diagonal termination of the riffles results in catching and moving toward the concentrate end such particles of concentrate as are unable to withstand the full flow of wash water on the unriffled surface. If the feed to such a table contains coarse grains of free mineral that tend to go into the middling, extension of occasional thin riffle cleats to the concentrate end, particularly near the feed side of the deck, will result in removal of these particles without holding back much fine gangue. Wright (*100 J 642*) recommends termination of riffles along a curve convex to the concentrate side instead of along the usual straight diagonal, in order to hold concentrate higher on the deck and to spread the concentrate band wider and thus make the cut between concentrate and middling sharper. Garber (*111 J 783*) recommends carrying broken extensions of the regular riffling to a second advanced diagonal for the treatment of complex ores. If the lower end of the diagonal is brought to the concentrate end 2 to 4 in. above the lower corner, the concentrate-middling split can be made on the end of the table where the waggle of the discharging stream is parallel to the cutting edge, with corresponding increase in sharpness of cut as compared with corner cutting. If the middling streak is narrow the middling-tailing cut can also be made on this end. Such riffling, however, requires that the transverse tilt be less, and more wash water must therefore be used. If the concentrate end is cut back diagonally to the feed side, say 6 in. in the width of the deck, the same end is served without the necessity of flattening the table when running and, in addition, the concentrate end is kept wet by wash water supplied at the feed side. When high tonnages

or coarse feeds are treated, shallow riffles should be extended from the separating diagonal to the concentrate end for the full width of the deck in order to hold up concentrate with the steep slope necessary to carry off the tailing. This will result in somewhat lower-grade concentrate than otherwise, but increases recovery. The WIDTH OF RIFFLES is determined in part by the size of the largest grains of feed and in part by the demand as to grade of tailing, other conditions remaining the same. Width must be sufficient to prevent jamming of coarse particles and clogging of riffles; this means that it should be more than three times the diameter of the largest grain. Washing by swirl is greatest in narrow deep riffles, hence these make clean concentrate, but at the expense of higher tailing loss. Steep-sided riffles produce more washing than those with slanting sides. Hence riffles for slimes should be shallow, relatively widely spaced, and have slanting sides. Richards calls attention to the fact that riffle cleats fastened onto a plane surface cause the plane of the roughing surface and that of the cleaning surface to intersect at an angle along the diagonal of riffle termination, thus forming a valley in which the grains pile up and hinder separation. He recommends grooving the riffles into a plane surface to overcome this effect, and this has been done in some tables (Card) and its equivalent has been effected in the plateau arrangement of the Plat-O table.

Cost of tabling ranges from 1¢ to about 6¢ per ton tabled according to the tonnage treated and the consequent opportunity to spread labor cost. Water is the only other real item of expense, since power is very small and maintenance substantially negligible in most cases.

Pneumatic tables. See Art. 36.

VANNERS

General description. A vanner is a concentrating machine adapted to the treatment of fine sands. In its most usual form it consists essentially of an endless belt traveling over head and tail pulleys, and having its upper surface horizontal transversely but inclined longitudinally; the belt and all of its supports are carried on a frame which oscillates in the plane of the belt. The belt is usually made of rubber and the upper surface travels slowly uphill. Feed is introduced about one-quarter of the distance from upper to lower pulley, heavy mineral is discharged as concentrate over the upper pulley and light mineral is washed over the lower pulley.

Types of vanners. Four types are distinguished by the direction and character of shake and direction of slope, *viz.*: (*a*) oscillating side-shake, end-slope; (*b*) oscillating end-shake, end-slope; (*c*) differential end-shake, side-slope; (*d*) gyrating, end-slope. The first are the oldest and were most used, the Frue, Johnston, and Isbell being typical; the Embrey, Craven and Triumph are of the second class; the Luhrig, Weir-Meredith, and Monell are of the third class, and the Senn the fourth. Representatives of only the first and fourth types are discussed herein, as practically the last survivors of the vanner group in present-day mills.

23. PRINCIPLES OF VANNER CONCENTRATION

The vanner is a shaken-bed concentrator in which the bed is of relatively great horizontal extent and small thickness and serves for roughing only; cleaning is done by film sizing (Art. 32).

The slope of the vanner belt is such, when taken with the volume of pulp fed, that a wide shallow stream is formed through which most of the granular part of the feed can and does settle to the belt surface before reaching the tail roller. The up-slope drag of the belt is so regulated as to make the horizontal motion of the material in contact with it, referred to the earth, a very slow travel in the upstream direction. Hence a bed of settled material builds up on the belt. This bed must be kept thereafter sufficiently dilated by the shake to permit reverse classification (p. 03) and gravity stratification. When so maintained it has sufficient fluidity as a whole to permit its top layer to flow slowly downstream while its bottom layer flows upstream. Reverse classification brings the coarse material to the top and this, by reason of the nature of the preparation of vanner feed (Art. 25), is gangue. The bottom layer, which is a rough concentrate, is dragged up-slope past the feed point, and is then subjected to film sizing, which washes out the finer gangue. This latter flows down, joins with new feed, and is, in part, again taken into the bottom layer and returned to the film-sizing zone. But as the bed ages, the layer of fine gangue gradually builds up into the down-flowing upper stratum of the bed, and a balance is reached with the amount of such material leaving over the tail roller statistically equal to that introduced with the feed.

It is not impossible that some adhesion likewise occurs between sulphide or other minerals for which soaps are collecting agents (Sec. 12, Art. 4) and the belt. The rubber of

the belt is a hydrocarbon, the sulphides may be expected to be more or less coated with hydrocarbon-like surfaces from lubricating oils introduced into the ore during mining and crushing (see Sec. 12, Art. 31), and adhesion of hydrocarbon surfaces to each other in the presence of water is well established. The miscellaneous skin-flotation always in evidence around vanner plants treating sulphide minerals lends color to this hypothesis.

24. SIDE-SHAKE VANNERS

Vanners of this group are substantially alike as to method of imparting the side shake, supporting the belt, and causing it to travel; the only important difference, as noted below, is in the character of the crosswise motion, as affected by the manner of supporting the shaking frame.

Frue vanner (Fig. 66) has an endless rubber belt *a*, usually 6 ft. wide, with its edges flanged upward, mounted to pass around four large rollers or pulleys *b*, *c*, *d*, and *e*, known respectively as head roller, tail roller, dipping roller, and tightening roller, all carried on a shaking framework *f* which is in turn supported from below on a plurality of lathlike steel springs *g* suitably seated on the framework *f* and main frame *h*. At the central position of the shaking frame, the supports on opposite sides lean slightly toward each other, whence, at the end of a stroke in one direction, that side of the belt rises while the opposite side is depressed, and *vice versa* on the return stroke. Intermediate small-diameter rollers *i* (best made of brass) prevent the upper run of the belt from sagging. The plane of the upper surface of the tail and intermediate rollers below the feed box cuts the head roller about 0.5 in. below the top, thus making the slope of the belt between the feed box and head roller steeper than below the feed box. The intermediate rollers above the feed box conform to the steeper slope. The framework *f* is shaken by means of three straps *j* actuated by simple eccentrics synchronously mounted on shaft *k*, which is carried on the main frame. A cone pulley *l* on this same shaft drives a shifting pulley on the flexibly mounted shaft *m*, on the forward end of which is a worm *n* engaging a worm wheel that is flexibly connected by means of a spiral spring with the shaft of the head roller, thus effecting up-slope travel of the upper run of the main belt. The rate of travel is changed by moving belt *p* by means of hand wheel *q*. The feed box *r* with a suitable pulp-distributing sole is carried on standards attached to the shaking framework *f*. Wash water is applied from box *s*, and a suitable spray for removal of concentrate is mounted under the head roller. Tailing is discharged over the tail roller. The belt is caused to travel straight on the head and tail rollers by swinging the tightening roller forward on the side toward which the belt is desired to travel, by means of hand wheels *t*. Adjusting bolts on the tail-roller boxes may also be used to guide the belt. Longitudinal tilt is adjusted by means of bolts *u*, but the machine must be stopped to make this adjustment accurately.

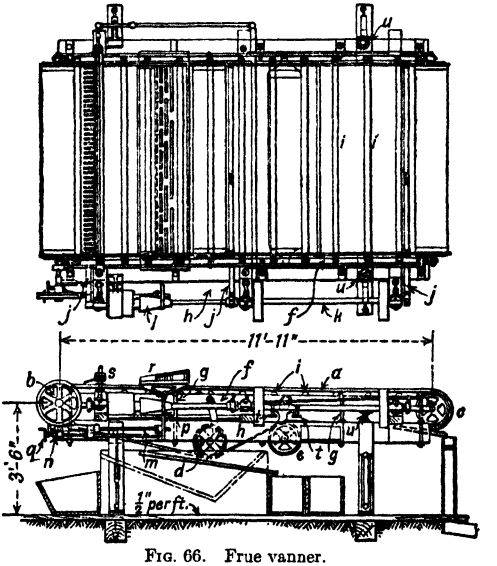

FIG. 66. Frue vanner.

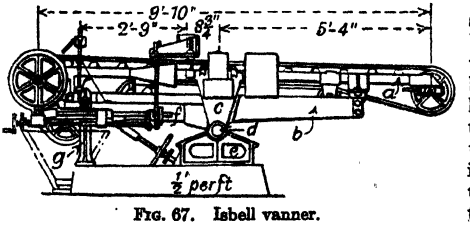

FIG. 67. Isbell vanner.

Isbell vanner (Fig. 67). The shaking frame *a* is supported, at four points, on the ends of two longitudinal leaf springs *b*, set edgewise and balanced on the crossbar *d*, thus facilitating adjustment of longitudinal slope. Side shake is imparted by a single eccentric. Owing to the method of support, the

crosswise motion of the belt is exclusively horizontal and rectilinear. The JOHNSTON vanner is like the Frue, with the important exception that the shaking frame is suspended from four overhanging pedestals instead of supported from below. The suspending links on opposite sides converge downward, whence an edge of the belt rises toward the end of its forward stroke, the reverse of the Frue motion. Of the three side-shake vanners, the Johnston is most free from objectionable sand banks at edges of the belt, probably owing to this characteristic sidewise motion.

Performance and operating data on a few typical examples of side-shake vanners are given in Table 87.

Table 87. Examples of vanner practice

	Bunker Hill & Sullivan	Morenci	Chino	Alaska-Gastineau	Moctezuma	Burro Mt.
Vanner	Frue	Frue	Isbell	Isbell	Johnston	Senn
Ore of—	Lead	Copper	Copper	Gold	Copper	Copper
Belt (*a*): Life, yr.	6	2.2	2+	.....	4–5	2.2
Slope, in./ft.	5/16–7/8	1	0.55	0.6	2 3/4–3	0.25
Speed, in./min.	36	100	64	41	130	.....
Shakes per min.	200	210	160	177	120	140
Length of shake, in.	1 1/8	1	1	1.25	7/8–1 1/4	3/4
Horsepower	0.5	0.5	0.5	0.5	0.25	0.7
Wash water, g.p.m.	3	*b*	0.7–1.4 *c*	4 *d*	5.55	.....
Feed:						
Tons per day	5	15–30	18	5	10–12	30–35
Moisture, %	77	84	66–80	93	85–88	80
Size, on mesh.						
10	.....	.....	0.1	.....	.....	.....
14	.....	.....	.1	.....	.....	.....
20	.....	.....	.3	.....	.....	.....
28	.....	0.79	1.6	.....	.....	.....
35	.....	7.46	3.3	.....	.....	.....
48	.....	18.55	4.3	.....	1.20	.....
65	.....	25.08	6.8	.....	2.35	.....
100	.....	18.37	8.7	.....	4.60	.....
150	.....	13.42	9.8	4.7	7.35	.....
200	5	2.61	2.1	6.9	5.70	.....
<200	95	13.72	63.7	88.4	78.80	.....
Assay:						
Feed	12%	0.45%	1.20%	$2.08	3–3.6%	0.65%
Concentrate	67%	7%	10.40%	*e*	12–14%	10.0%
Tailing	7%	0.38%	0.65%	$1.22	1.2–1.8%	0.55%

a All belts 6 ft. wide, smooth.
b 130 g.p.t. of feed.
c Plus 2 to 3 g.p.m. for removing concentrate.
d Plus 5.4 g.p.m. for removing concentrate.
e Au, 2.5 oz. (@ $20.67); Ag, 25 oz.; Pb, 25%.

In the ARGONAUT 60-stamp amalgamation mill in 1929 (*IC 6476*) 36 Frue and Johnston vanners treated the plate tailings at average rate of 6.75 t.p.d., extracting sulphide concentrate amounting to 2.42% by weight of their feed. Discharge from each two plates (10 stamps) was classified through a 2-spigot spitzlutte and an 8-ft. Callow cone, each of the three products, sized as in Table 88, being split to two vanners. All vanners operated at 180 s.p.m., with belt travel about 4 ft. per min. Driving power, 3.33 kw-hr. per ton of feed. Labor, 1 man per shift on operation and 1 man per day on maintenance. Assays: feed, $2.25; concentrate, $64.89; tailing, $0.68. In this ore, sulphides carry about 20% of the total value. Frue vanner remains standard in the tin mills of CORNWALL. At the GEEVOR mill (*57 MM 265*) 26 Frues are fed direct from stamps; both products of the vanners receive extensive further treatments, the concentrate by flotation (for eliminating sulphides) and the tailing by three additional Frue vanners, three varieties of sand and slime tables, and round buddles. At the LEEUWPOORT (Transvaal) tin mill (*27 CEMR 308*) nine Isbell vanners are fed in parallel from the last two spigots and overflow of an 8-spigot classifier, together with thickened slimes from a primary washer. The thickened tailings from the vanners pass to three Senn vanners, tailings from which are scavenged on another Senn. Four additional vanners treat slimes from a grinding-classifier circuit reworking sand-table concentrates after removal of pyrite by flotation.

Table 88. Vanner feeds, Argonaut mill, 1929

Mesh	Spig. 1, %	Spig. 2, %	Spig. 3, %
>35	2.30	.....	.....
48	9.29	.....	.....
65	12.28	4.22	.....
100	16.42	14.25	.....
200	17.57	41.05	14.20
<200	42.13	40.50	85.80

Senn vanner (Fig. 68) is of the end-slope variety, but the shaking frame *a* oscillates both endwise and sidewise on ball-bearing supports *b*. Sidewise shaking motion is trans

mitted from drive shaft *c* through eccentric *d;* end shake is effected through eccentric *e*, cranks *f* and *g*, and rod *h*. Belt motion is transmitted from the drive shaft through friction cones *i* and worm *j* to gear *k* on the head roller. Gyratory movement is depended upon to cause rapid stratification in a thick pulp and allow higher capacities than are usual with vanners.

The Senn was one of the more widely used vanners in the southwestern copper mines. At MORENCI, it is reported to have treated daily as much as 111 tons of ore, in this case up to 2.362-mm. size with 40% of <0.074-mm. Of a slightly finer ore, also at MORENCI, a Senn is reported to have treated 54 t.p.d. Table 87 contains an additional example of Senn-vanner operation.

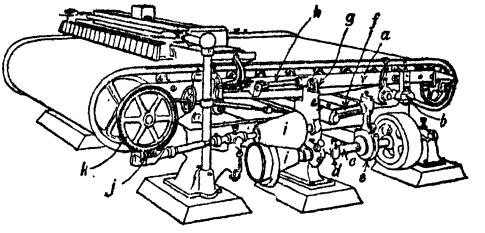

FIG. 68. Senn vanner.

25. OPERATION OF VANNERS

Removal of concentrate from the belt is normally effected by a spray directed at the face of the belt about halfway between the head and dipping rollers. Water consumption here is upward of half of the total for the vanner.

Various mechanical devices (rollers, brushes, etc.) have been employed to remove concentrate either at a higher and more convenient level, or more thoroughly; in the latter case, recovery is often improved by avoiding the accumulation of an adhesive slimy film on the belt. Usual mill practice is to scrape concentrate out of its collecting box with hoes; mechanical and continuously discharging devices have also been installed for this purpose, avoiding occasional damage to the belt.

Size of feed. The maximum rarely exceeds 1.5-mm., the average maximum is between 0.6- and 0.8-mm. The vanner should never be fed with material coarse enough to be treated on shaking tables, since the latter will treat sands with an efficiency equal to that of vanners and at much greater capacity.

Size of grains affects vanner adjustments. Usual practice is to treat fine feed with flat slope, slow belt travel, and little wash water, and coarse feed *vice versa*.

Pulp consistency is usually between 80 and 90% water except on the gyrating vanner where it ranges from 60 to 80%. The pulp consistency should be such that the bed stratifies readily. If the feed is too thick, the bed FELTS, i.e., compacts into a semisolid mass, if there is much clayey slime present, after which excessive wash water must be used to keep sand out of the concentrate, and practically no fine mineral can get through to the belt surface. The only remedy is to loosen the bed with a broom or scraper, sacrificing most of the mineral contained, and start afresh with thinner feed, slower belt travel, or steeper slope. Felting is most common on side-shake vanners, less so with Johnston than with Frue and Isbell; it is less frequent on gyrating vanners, which can therefore be run with very thick feed on account of the greater fluidity of the bed.

Mineral of high specific gravity can be saved with steep slope, slow travel, and much water as compared with mineral of low specific gravity; gangue of high specific gravity will require steeper slope, slower travel, and more water than gangue of low specific gravity. If the ratio of concentration is low, concentrate will come over in a thick sheet with entangled gangue unless the machine is run with steep slope, rapid belt travel, and much water. An ore with a high ratio of concentration, on the other hand, needs slow, careful treatment to save the small amount of mineral and discard the large amount of gangue; hence the machine is run at low slope and slow belt travel with little water.

Capacity varies with size of feed and character of ore, as well as with character of service, *i.e.*, roughing or finishing.

Five to six tons per 24 hr. is close to the average on fine sands containing slimes. A general rule on such material is 1 ton per 24 hr. per ft. of belt width. Castani (*3 MM 48*) recommended 0.6 ton per 24 hr. per ft. as maximum. In roughing service, making finished tailing only, the capacity is 10 to 20 tons. The Senn vanner at MORENCI treated as high as 150 tons per 24 hr. of feed through 3-mm. Chilean-mill screens in roughing service but shaking tables would be a better installation for such work in general.

The indications of the data cited below are that feed should be finer than tables can handle (Art. 22), that it should be deslimed, and that, if table-size material is fed, the size range should not exceed 10 to 1 for an ore with a concentration criterion of 2.5. The data confirm experience with all bed-type concentrators, *viz.*, that they not only will not save

slimes, but that the presence of slimes decreases their efficiency in treatment of sands. The Richards data indicate that, in the cleaning plane, the water current necessary to wash out coarse gangue also scours out fine heavy-mineral sand.

Richards' (*TB 363*) examination of the tailing of a well run vanner treating <0.75-mm. quartz-pyrite ore showed the average ratio of size of quartz to that of pyrite to be about 10 to 1. In CALIFORNIA GOLD mills 40-m. fine-stamp product was sent to vanners after amalgamation on plates; in CORNISH TIN practice vanner feed comes directly from fine stamps or is the tailing of tables taking feed direct from stamps. Practice at the BUNKER HILL & SULLIVAN West mill, from 1924 to 1929 (*IC 6314*), was to deslime vanner feed-in 8-ft. cones equipped with hydraulic sorting pockets like those of the Fahrenwald sizer (Sec. 8, Art. 11). Feed to cones was 92% <150-m.; their spigot product, amounting to 86% by weight, carried 85% of the lead in their feed. Previously, vanners had been fed with unclassified slimes of the same character as the feed to cones, merely thickened to 7 parts water to 1 part solids. Performances by single vanner under the two conditions are compared in Table 89.

Table 89. Performance of Frue vanner on natural and deslimed feeds

	Natural feed			Deslimed feed		
	Tons per day	Assay, % Pb	Pb distribution	Tons per day	Assay, % Pb	Pb distribution
Feed	2.5	7.0	100	23.43	6.8	100
Conc.	0.17	55.0	55	2.09	69.0	90.5 *a*
Tailing	2.33	3.3	45	21.34	0.7	9.5

a Equivalent, for comparison with natural feed, to 77% recovery.

Shake is dependent on both length and frequency of stroke. Side-shake vanners are usually run at between 180 to 200 @ 1-in. s.p.m., except that the Johnston is run more slowly (120 to 140) with a stroke between 1 and 2 in. Gyrating vanners run at 140 to 160 @ $^1/_2$-in. to $^3/_4$-in. strokes.

The amount of shake has an important bearing on the minimum size of grain that will settle on a belt.

Slope is closely dependent upon speed of belt, steep slope corresponding to high belt speed and *vice versa*. With side-shake vanners, slope ranges from 0.15 to 1 i.p.f. and is usually steeper with coarse feed or where clean concentrate is desired than with slime feed or in roughing service. Richards' average for all service is from 0.28 to 0.31 i.p.f.

Belt speed determines bed thickness and the thickness of the mixed layer pulled out onto the cleaning plane. Belt speed and wash water are the two adjustments most depended upon by vanner operators for controlling results. High belt speed tends to keep fine mineral out of the tailing but drags coarse gangue into the concentrate unless considerable wash water is used, and this increase in water flowing down the belt may defeat the purpose of high belt speed by keeping fine mineral in suspension. The average speed for side-shake vanners is between 36 and 48 in. per min., with higher speed when a rough concentrate is sought and lower when particularly clean concentrate is desired. Corrugated belts may be run at lower speeds than smooth on account of the fact that fine mineral settles in the corrugations and is protected from the wash water; they must be run slowly when coarse sand is present on account of the difficulty of washing this down-slope.

Wash-water consumption per machine is low, ranging from about 1 to 5 g.p.m., including both dressing water (added on top of belt) and that utilized to remove concentrate from the belt. The maximum water consumption per ton corresponds to attempts to make high-grade concentrate from finely ground low-grade feed. Wash-water consumption per ton of ore treated is less on vanners than on shaking tables in the same service. The SENN vanner uses much less water per ton of feed than other types on account of its large capacity.

Depth of bed is a resultant of all adjustments. Flat slope, high belt speed, coarse feed, thick pulp, and small amount of wash water all tend to produce a thick bed and *vice versa*. Richards recommends $^1/_4$ in. maximum thickness. Beds up to $^3/_4$ in. thick are used when crowding vanners in roughing service but are too thick for finishing. Channeling of bed, either by reason of side banks or center banks, will cause dirty concentrate or rich tailing or both.

Side banks. Frue and Isbell vanners are peculiarly liable to formation of hard banks of sand along the flanges. These creep up into the concentrate and also increase tailing loss. They are formed by any knock or irregularity in the shaking motion such as by a loose or worn eccentric or connecting rod or end play in small supporting rollers or in end rollers. A bank on one side may be formed because the belt is not level transversely. Parallel longitudinal ridges will form if the bed is too thick. The REMEDIES are to increase water, decrease belt travel, or increase slope. The Johnston vanner, on account of the more gentle and tilting side motion, is comparatively free from side banking.

Belt is usually smooth rubber with two plies of canvas and a flanged edge 1 to 1 1/4 in. high. Belts with transverse 60° corrugations spaced 8 to 32 to the inch had considerable vogue in treating relatively coarse feeds. Corrugated belts permit low belt speed but require large quantities of wash water to hold back gangue. This difficulty increases with the size of the corrugations. Tailing is generally lower than on smooth belts but concentrate is correspondingly lower grade. Canvas belt, painted with some water-proof compound, has been used for fine slimes, but it is difficult to wash out fine gangue from the uneven surface without also removing fine mineral. A rubber belt covered with corduroy has been used recently on an Isbell vanner for capturing fine gold in a Colorado mill, and a Frue vanner, similarly equipped with wool blanket cemented to the rubber belt, for fine tin slime in Siam. Belts should be kept sufficiently tight to prevent sagging of the upper surface between the supporting rollers. End rollers are adjustable lengthwise to permit tightening. An eggshell surface, pitted with shallow depressions about 0.6 by 0.1 in., has been made. The life of rubber belts is from 2 to 6 years, if protected from abuse.

Attendance necessary varies with service and regularity of feed and wash-water supply. In finishing service 1 man can attend to 30 to 40 machines, if feed and water supply are regular, but when dirty reclaimed water is used and the wash-water supply consequently clogs, or if the feed is irregular, 1 man will have difficulty with 20 machines. In roughing service a man can handle 100 machines without difficulty. The vanner is a complicated machine, when judged by other concentrators; it requires skilled operatives, and repairs are frequent.

Efficiency of vanners is always low. Recovery rarely exceeds 50%, even on rich galena slimes; it ranges between 20 and 35% in finishing service on copper slimes, and rises to 60 to 75% when making rough copper concentrate.

STIRRED BEDS

When a long-range product is stirred at a rate insufficient to maintain the grains in a suspension independent of direct force from the container, reverse classification and gravitational stratification occur. Such beds are stirred beds. The stirring may be effected by tumbling around substantially horizontal axes, as in a tumbling barrel, or as in a sluice; by stirring with a paddle or the like, as in a diamond pan; or by the stirring action of flowing water, as in a gold trap. The beds thus formed act to effect rough concentration. Other means, usually streaming, must be used for cleaning.

26. SLUICE

Sluicing is a form of roughing concentration that is highly efficient in the treatment of low-grade long-range feeds in which the valuable mineral is free, finely divided, and has a concentration criterion of 3.5 or greater. Sluices have been used extensively in washing gold-bearing gravels in all parts of the world; also for working most cassiterite placers; in modified forms they have had considerable use for washing slate and pyrite from coal (concentration criterion, 2); and occasionally have been applied to recovery of metallics from industrial wastes and other artificial deposits (*e.g.*, lead shot from skeet ranges).

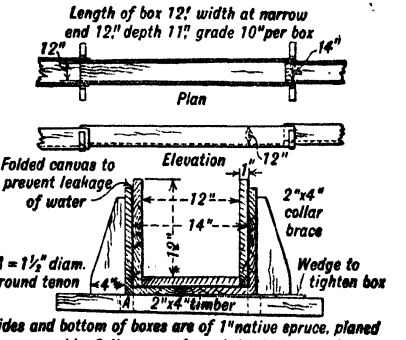

FIG. 69. Sluice box.

Description. Essentially a sluice is an inclined trough or launder (Sec. 18, Art. 16) on a flat slope through which feed is washed (SLUICED) by a rapid stream of water. The bottom of the trough is roughened by strips or blocks (RIFFLES) fastened in place and so arranged as to maintain spaces between them. Arrangements of riffles are legion.

The form, size, and elaborateness depend on the scale of work. Sluices for prospecting and small-scale mining work are usually 12 in. wide and deep, made in 12-ft. sections, usually with sufficient flare to allow about 2-in. telescope in joining them together in strings. Some operators prefer butt joints with cover strips, on the ground that they cause less clogging than telescope joints. One-

inch lumber is usually employed for sides and bottoms of small sluices and 2×3-in. or 2×4-in. scantlings for bracing (see Fig. 69). Such boxes will generally serve for a season (4 to 6 mo.), rarely for more than a year of continuous service. Sluices intended for permanent use are made with 1.5- to 3-in. bottom boards and bottom side boards and with 1- to 3-in. upper side boards; usually in 12-ft. lengths, the transverse dimensions depending upon the amount of solid and water to be transported, the slope or grade, and the character of the heavy mineral and gravel.

Action in a sluice. The sluice, like the pan, is a complete concentrating mill.

Flowsheet (Fig. 70). Gravel usually goes first to a screen (1), often overlying a mud box. Thence it is carried by water to the sluice proper. The quantity of water and slope are so regulated that the pebbles and boulders are rolled along the tops of the riffles, but the sand, other than the finest of the light, can settle to the riffle level, and that which fails to settle in the riffles thereafter progresses by a series of leaps under the scouring action of the stream. Essentially the action here, above the riffles (2, 3), is

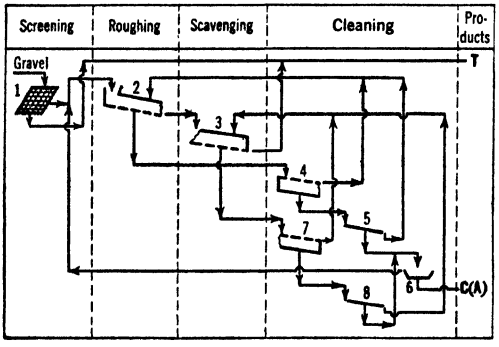

Legend for Fig. 70.

1. Screen.
2. Space above tops of riffles at head end of sluices.
3. Space above tops of riffles in balance of sluice.
4. Space between riffles at head end of sluice (underneath (2)).
5. Bottom of (4) after removal of riffles. Smooth strake.
6. Pan.
7. Space between riffles underneath (3).
8. Bottom of (7) after removal of riffles. Smooth strake.

FIG. 70. Flowsheet of a sluice.

simply further sizing, but it is concentration because the values in the gravel are all in the fine sands. The great bulk of the values settles in the first part of the sluice (2, 4); the balance (3, 7) is for scavenging.

The sand which settles between the riffles is maintained, in a sluice properly built and operated, as a bed stirred by the eddies produced by the roughened bottom over which the water flows, and by vibration of the box under the impact of gravel and boulders tumbling over the riffles. The heavy material settles through the bed to the bottom, and the lighter is gradually displaced back into the stream above until the riffles in (4), in a gold sluice, for example, are filled with a bed of magnetite and associated heavy minerals (black sands) through which gold can sink but into which quartz sands and the like do not penetrate (Art. 1). Action in (7) is similar to that in (4), but it takes longer here to establish the black-sand bed, and it is never as dense as in (4). In the clean-up (items 5 and 8) the bottom of the sluice acts as a smooth strake (Art. 34). Since the clean-up starts from the head end, the middling washed away is again presented to the roughing section (2). Clean-up of the lower section (item 8) is normally made much less frequently than that of the upper.

The concentrate of the clean-up is treated more or less elaborately according to the scale of the operation and the size of the gold. In the simplest case, with reasonably coarse gold, it is simply panned (item 6). If the gold is fine, mercury may be added here, and the concentrate is an amalgam. When the gold is fine, mercury is often added at the head of (2) during the roughing operation to aid in holding gold in the riffles. For details of more elaborate clean-ups, see Sec. 2, Art. 21.

The essential requirement for effective saving of fine heavy values is the loose, active bed of sand in the inter-riffle spaces. This should be maintained in place as a whole, while losing content only from the top layer, continuously adding heavy material to the bottom layers. The rapidly moving mass of coarse gravel above the tops of the riffle cleats should not interfere with access of sand to the riffles, nor yet splash material (settled sands, gold, amalgam, etc.) out of the riffles. The two desiderata are not necessarily inconsistent.

Gravel transport is effected by sliding and rolling along the tops of the riffles, in the case of the largest particles, and a leaping motion (SALTATION) in the case of the finer intermediate sizes. Sand either hugs the bottom, with some saltation above the riffles, or is maintained wholly in suspension; the latter gives poor recovery.

The surface of the water in a sluice is either wavy or smooth. A smooth surface indicates a smooth hard surface of settled sand in the bottom and poor gold saving. The wavy surface reflects ripple ridges on the bottom; these ridges and the resultant waves may move either upstream or down. In the latter case the ridges or dunes are moving by erosion on the upstream slope and deposition on the downstream side of the crest. This accompanies underload and represents a tight bottom, which is bad for gold saving. Up-moving dunes (anti-dunes) represent erosion on the downstream side and deposition on

the upstream side; they connote an eddying or boiling activity of the sand in the lee of the dune, which makes for good gold saving; it is a concomitant of overloading. Hence, paradoxically, an incipiently overloaded sluice is not only a superior tailing-transport device but is also a better gold saver. Excessive overloading requires excessive water to prevent clogging; in this condition fine gold is carried away unless undercurrents are provided.

Sluice boxes should be made thoroughly watertight. The lumber should, therefore, be surfaced and sized, free from knots and cracks, but it need not necessarily be tongued and grooved. Joints are closed by soft-pine splines, batten strips outside, or oakum caulking. Side liners of rough lumber or sheet steel are used in all but the smallest boxes. These side liners may serve as hold-down cleats for the riffles. Sills and posts for large sluices are made of 4×6-in. or 6×6-in. lumber and spaced about 3 to 4 ft. apart. On every second or third set the posts should be braced to the sill with 1×6- or 1×8-in. angle braces and the sill should be about twice as long as the sluice width to give proper slope to the braces. The bottom and sides should be spiked to the sills and posts with 30d and 20d spikes respectively, spaced about 4 in. (*Bowie*).

A large sluice used at LA GRANGE mine in California is shown in Fig. 71, item F. The sides, bottom, and side liners are 3-in. plank. Rail riffles, set longitudinally in the head end of the sluice and transversely below, are used.

AUSTRALIAN practice differs (*17 MM 16*). Boxes for gold gravel are made 4 to 8 ft. wide, 12 to 15 in. deep, and 60 to 100 ft. long, in 12-ft. sections, and are bolted together with flush joints and outside cover plates. Boxes for tin gravels are 10 ft. wide, 18 in. deep, and 120 to 200 ft. long.

Riffles are placed in sluices to hold a bed but also, to an important extent, to disintegrate the gravel; thereafter, having satisfied these primary requisites, to aid in transporting gravel. They perform the first function by roughening the bottom surface of the sluice, thus decreasing the velocity of the lower layer of water and permitting sand to settle readily. The interstices furnish protection to the settled material from the horizontal transporting effect of the stream. All riffling is conformed to hold the bed securely and at the same time to promote stirring by the overpassing current (BOILING). Disintegration is effected by causing the boulders to tumble instead of slide.

Pole riffles (Fig. 71, item A) are probably the most common form for small sluices, when a maximum amount of material is to be moved with a minimum amount of water, gold is coarse, and loss of a small

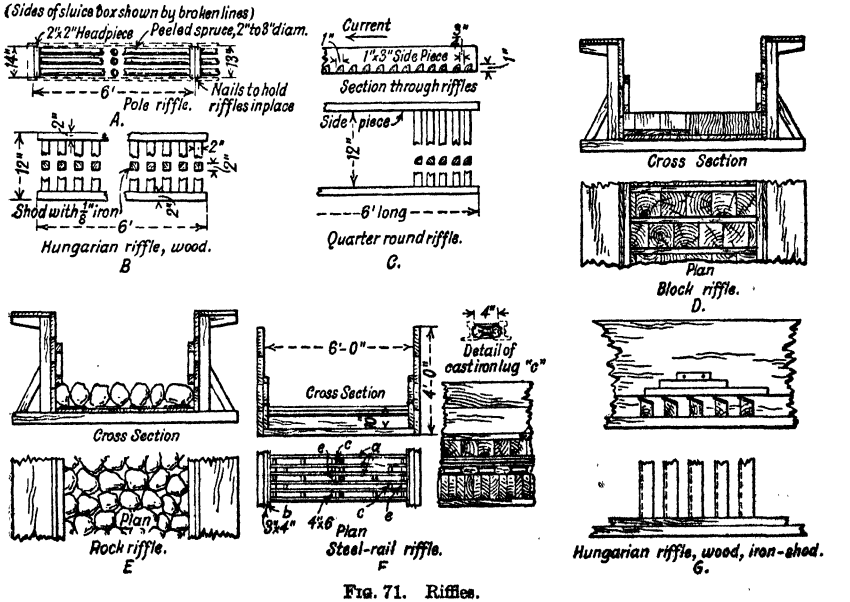

FIG. 71. Riffles.

amount of fine gold is relatively unimportant. They are made normally of 2- to 6-in. peeled poles or 3×3-in. squared strips spaced 1 1/2 to 3 in. in the clear and made up in units of convenient length to handle, *e.g.*, 6 ft., by transverse straps nailed on at both ends. Pole riffles wear quickly but are inexpensive. At one plant 1 1/2 sets of 4-in. lodgepole pine riffles wore out in 30 days, after handling 18,000

cyd. At another plant a set lasted 10 days, handling 1,100 cyd. (*IC 6786*), but the usual life is much longer. Squared riffles are often protected by angle iron. The end straps are cut to fit snugly across the sluice box and are normally held in place by nails driven into the ends through the sides of the sluice, but cleats nailed to the sides above the water line, obviating nail holes below water level, are better. A somewhat similar riffle, made of 1 1/2×6-in. plank set on edge longitudinally, spaced by 1 1/2-in. blocks, and shod on the upper edge with an iron bar 1 in. × 1 1/2 in. is described by *Bowie*. Variants of this have been used elsewhere. Hutchins (*Bul. 263 USGS 200*) describes a pole riffle with 2×2×1/16-in. pieces of shee' iron driven into the poles cornerwise, long axis parallel to the poles, for use in disintegrating clayey material.

Rail riffles (Fig. 71, item F) are used in large sluices where resistance to wear is an important factor. They are commonly set lengthwise on transverse sills, in which case their action is similar to that of pole riffles; or they may be set transversely. Longitudinal-rail riffles are made up in 6-ft. lengths and the width of the sluice box. They are usually set bottom side up and held together by tie rods with wood or special metal spacers (Fig. 71, item F). Bouery (*95 J 1055*) found that the life of rails set transversely was greater than with longitudinal setting, that between 4 and 6 in. c-c. was the best spacing for transverse setting, considering duty of both water and gold saving; and that with longitudinal setting wear was more rapid with 8-in. spacing than with 5-in. He also found that when rails were set directly on the bottom of the sluice the gold-saving capacity was insufficient and therefore devised and used the combination riffling shown in Fig. 71, item F, in which the principal function of the rails is to protect the wooden riffles from wear and to increase the transporting duty of the water; 45-lb. rail riffles set longitudinally handled about 32,000,000 cyd. of water and 2,500,000 cyd. of gravel before replacement was necessary; the same weight rails set transversely handled 50% more material, with spacing in both cases 5 in. c-c. Cast-iron bars, *e.g.*, 1 1/2×3-in., are used in the same way as rails. Strap, 1/2×3-in., spaced 1 1/2 in. in comb cuts in 2×4-in. wood cross strips 4 ft. apart are also reported (*IC 6786*).

Block riffles (Fig. 71, item D) are the commonest form in all large sluice lines. The blocks are usually about 8 to 13 in. long, either squared or round, 6 to 20 in. in diameter or on an edge. They are nailed to 1- or 1 1/4×2- or 3-in. cross strips before being put in place, and these strips are nailed through the sides of the sluice. Holding-down strips nailed to the inner sides of the sluice are also used. Squared riffle blocks are usually spaced about 1 in. from face to face transversely (thereby differing from the figure) and the nailing strips produce a spacing of about 1 in. longitudinally. Longitudinal joints are preferably staggered in adjacent transverse rows. Round blocks are fitted as closely together as possible when fastening them to the nailing strip.

Block riffles produce a large amount of drag; they offer good protection to settled material and cause sufficient boiling to remove a considerable amount of sand from the concentrate. Their disintegrating effect is low, but, in compensation, they interfere but little with transport. *Bowie* advises the use of block riffles in the head boxes at all times. Their ADVANTAGES are: cheapness, efficiency in gold saving, ease of removal and clean-up; their DISADVANTAGES are rapid wear and difficulty in setting on account of tendency to float. At LA GRANGE, when handling 1,000 cyd. of gravel per hr. in a 6-ft. sluice, the life of pine blocks was only 17 days (*95 J 1056*), but average life is probably nearer 60 to 70 days. A set 7 in. long lasted two seasons, handling 140,000 cyd. of gravel (16-in. max.) on a flat grade (*IC 6786*). *Bowie* states that nut or pitch pine or a wood that is long-grained and "brooms" readily is best and deprecates the use of oak or other hardwoods that wear smooth. Gardiner and Johnson (*IC 6786*) say that, of the western conifers, the Douglas fir wears best. Round blocks are more difficult to set than squared but may cost sufficiently less to be economical. Welton (*20 IMM 172*) criticizes block riffles on the ground that gold does not readily settle in them and that they absorb gold values. The first criticism is not in line with general experience. There is, undoubtedly, some catching of gold in interstices in the blocks themselves, and old blocks should be and commonly are burned and the ashes panned. Longitudinal rails are sometimes set in blocks to decrease wear and drag.

Rock or stone riffles (Fig. 71, item E) are made by packing the bottom of the sluice with selected rocks 8 to 10 in. diameter, usually flattened, with or without some hand dressing, set on edge, inclined slightly with the run of the material, and with the longer dimension transverse. They are prevented from shifting longitudinally by transverse poles nailed in at intervals of a few feet. No devices for holding down are ordinarily necessary but with large quantities of coarse gravel they may become displaced. Rock riffles wear longer than block riffles and are more effective in breaking up cemented gravel, but they are more expensive to set and to clean up. They also require more water and greater slope to handle a given quantity of a given gravel. Welton says that under conditions requiring 1/2 in. per ft. slope with block riffles, rock riffles will require 3/4 in. per ft. They are commonly used in California for a short distance at the head of the sluice line and also in the tail sluices following block riffles, where their principal function is as a chute liner and clean-ups are infrequent.

Rock for riffles should be hard and uniform in size and hardness. Quartz is probably the best material, if locally available. As between block and stone riffles, Welton states that the former will collect three times as much gold in a given length. He ascribes this to the fact that with the rocks there is no continuous bar formed across the sluice and that the gold, therefore, works along more readily and for longer distances.

Hungarian riffle. This name is used by different writers to denote different forms of cross-stream riffles made of wood, wood iron-shod on top, steel, and cast iron or cast manganese steel. They are generally considered the best form for fine gold. Probably the nearest to a common characteristic in all riffles so named is an overhang on the downstream side. Fig. 71, item G, shows one form so made that the overhanging strap slopes upward slightly on the downstream side. It is frequently claimed for this type of riffle that it is good for disintegrating gravel, but Perrett (*122 P 417*) rightly remarks that a sluice is not an efficient gravel disintegrator and that the use of obstructive riffles to effect disintegration results in undue loss of capacity. Wear is higher than for poles. Angle irons set on cross slats with one leg vertical and the other, pointing downstream, forming the upper surface, spaced 1 to 2 in. from edge of flange to back, are closely akin to this type. Riffles formed by gouging or boring out pockets in plank

(PIT RIFFLES) are also called Hungarian riffles (*Wilson*) as are also transverse square riffles without overhang. (Fig. 71, item B) (*100 J 995*). Pit riffles are used with mercury in the treatment of fine material. They are not suitable for coarse material on account of the fact that mercury and amalgam are splashed out of the depressions by impact of the large stones. Another form of pit riffle, used at intervals along the sluice lines on Yuba dredges, consists of a section of ordinary Hungarian riffles fitted with a bottom to hold in quicksilver and with the inter-riffle spaces divided to form small quicksilver pockets. RUBBER-CAPPED RIFFLES are reported (*26 *3 MCJ 22*) to outwear angle-iron or steel-capped wood; 1/4-in. soft rubber strip is used with 1/4-in. overlap; all-rubber riffles are more costly and heavier.

Miscellaneous riffles. A large number of other riffle forms have been used. Expanded metal over cocoa matting is common on dredge tables.

Moline (*17 MM 16*) describes several riffles used in Australian gold practice. A so-called Venetian riffle is used in certain parts of Russia (*15 MM 148*). The natural surface of bedrock or a bedrock surface crudely riffled by cutting transverse gutters forms the first gold-catching surface in some hydraulic mines. The grade must be much greater (*Wilson* says twice) than that of a wooden sluice for the same material. Hutchins (*105 J 861*) describes the use of a riffle in a Siberian sluice, consisting of perforated plate with 3/4-in. apertures, set 3 in. up from the bottom. Old car wheels laid close, flange side up, have been used (*IC 6787*). Blankets, corduroy, hides with the hair up, canvas, velvet, carpet, cocoa matting, and sod have all been used as gold-catching surfaces (see Art. 34). Alternation in type of riffling is reported to decrease packing (*141 *4 J 39*).

Mercury traps made by cutting depressions in a board, such as transverse grooves, 1 to 1 1/2-in. auger holes, or 2 to 4-in. half-moons, to hold mercury, are used with fine gravels, particularly on dredge tables and in undercurrents. Coarse gravels splash out the mercury.

Comparison of riffles. The bases of comparison are gold saving, cheapness, durability, ease of assembly, installation, and removal. It is impossible to classify riffles in other than most general terms with respect to their ability to perform their various functions. Riffles presenting a uniformly roughened upper surface of relatively fine texture have maximum retarding effect on the lower layer, but do not roughen the water surface, and roughening is desirable for catching fine gold. Transverse riffles forming a complete bar across the bottom of the sluice afford maximum protection to settled material and also cause considerable boiling, which enriches concentrate, but they obstruct the passage of gravel and consequently lower capacity. Longitudinal riffles cause the least drag on the lower layers of the stream and offer the least obstruction to the passage of gravel; they also offer minimum protection to settled material and are more subject to scouring action. The life of different types and the ease of removal and replacement are important considerations. In many cases the availability of a given riffle material or the prejudice of the operator is the deciding factor. Frequently more than one type of riffle is used in the length of the sluice line. Of 80 mines reported in *IC 6786*, 25% used Hungarian, 20% pole, 15% block, 15% rail, 25% miscellaneous, including angle-iron, expanded metal, or screen over fabric, rock paving, and cast-iron bars.

Slope of the sluice line depends on the character of the gravel, character of the gold, kind of riffles, and quantity of water available. Flat and shingly gravel requires more slope than rounded gravel; coarse gravel requires greater slope than fine. Very fine gold may be carried in suspension in the water if the slope is steep and the velocity correspondingly high, especially if there is much clay or mud; on the other hand, moderately fine gold is best caught in "rough" water and this condition is obtained by steep slope. Obstructive and transverse riffles used for disintegrating clayey and cemented gravels require steeper slope than longitudinal or block riffles. Restricted water quantity demands steep slope, if the maximum quantity of gravel is to be handled. With a given amount of water narrow sluices require, of course, less slope than wide. As a general operating rule, the slope should be such that the water used will transport the rocky material and prevent sand from packing in the riffles. Excess increases wear markedly and decreases riffle effectiveness. If water is scarce, however, slopes may be as great as 2 in. per ft., but with serious drop in recovery. Carrying capacity with a given water supply increases more rapidly than slope. Early boxes may be set flatter than regular grade, as may also end boxes, if fall is available. When unusual slope must be provided for boulder transport, an undercurrent should be provided to prevent loss of fine gold.

Bowie states that 6 to 6.5 in. per 12-ft. box is usual; 9 in. to 12 in. when much clay is present. Rounded gravel containing considerable clay or soil may be moved on a slope of about 2 in. per 12 ft. but it is better to have as much as 6.5 in. per 12 ft. to increase capacity and lessen the labor required for handling large boulders. Coarse gravel needs from 6 to 10 in. per 12 ft. and considerably more water than fine gravel. *Van Wagenen's* rule for slope for handling average gravel is: $F = V^2P/2A$, where F = fall in ft. per mile, V = velocity in ft. per sec., P = wetted perimeter in ft., and A = area of stream in sq. ft. *Wilson* gives Chezy's formula for the velocity V, in ft. per sec., necessary to transport boulders of average diameter a in ft. and specific gravity g as $V = 5.67\sqrt{ag}$. Williams (*56 MM 218*) states that in GUIANA grades are 5% for loose sand, 10% for loose sand and gravel, and 12 to 15% for heavy ironstone gravel. For clayey gravel, water is reduced and slope increased to increase puddling in the sluice. Perrett (*122 P 417*) states that the shingly Siberian gravel, when unscreened,

requires a slope of 18 in. per 12-ft. box. Sluices for catching lighter minerals such as cassiterite and sapphire are usually set on flatter slopes, ranging from 4.5 to 6 in. per box.

Newman (*138 J 230*) calls attention to the fact that with sandy gravels and fine gold, increasing slope increases activity in and looseness of the sand bed and tends thereby to increase recovery.

Water-carrying capacity. *Bovie* gives the following data: A sluice 6 ft. wide, 36 in. deep on 4 to 5% grade will run 3,000 to 5,250 cu. ft. of water per min.; 4 ft. wide and 30 in. deep, 1,200 to 2,250 cu. ft. per min. on a 2.1% grade and 3,000 cu. ft. per min. on a 4% grade; 3 ft. wide, 30 in. deep, 900 to 1,500 cu. ft. per min. on 1.5% grade. Assuming the wetted depth to be 50% of the total depth, which is usual, these figures correspond to average water velocities in the sluice of 4 to 10 f.p.s. Table 90 is from Gardner and Johnson (*IC 6786*). *Van Wagenen* states that the moving power of water in sluices varies with the velocity as follows: 16 f.p.m. begins to wear away fine clay, 30 f.p.m. just lifts fine sand, 39 f.p.m. lifts sand grains up to 1/16-in. diameter, 45 f.p.m. moves fine gravel, 120 f.p.m. moves 1-in. pebbles, 200 f.p.m. moves 2- to 3-in. pebbles, 320 f.p.m. moves boulders 3- to 4-in. in size, 400 f.p.m. boulders 6- to 8-in., 600 f.p.m., boulders 12- to 18-in. Rounded pebbles move, of course, more easily than flattened shapes, and pebbles of low sp. gr., *e.g.*, acid rocks, more easily than greenstone or basalt. In all cases the depth of water must be sufficient to cover the largest particle to be moved; but 6 to 8 in. is the normal maximum when large boulders are absent; packing increases with depth. The bottom width should be 1.75 to 2.25 times the wetted depth for maximum water-carrying capacity. Wider sluices clog on account of relatively low velocities.

Table 90. Water-carrying capacity of sluices (*IC 6786*)

Width, in.	Miners in.
12	25– 100
18	100– 300
24	200– 600
36	500–1,300
48–60	1,000–3,000

Length depends principally upon the character of the gold, less upon the dimensions and slope of the sluice and the kind of riffles. Coarse and granular gold settles quickly and is easily held in the riffles, fine and porous gold is carried long distances by the current. With low velocity in the sluice, riffled length must be greater to compensate for smoothness of flow. Long sluices aid disintegration. See also ***Distribution of gold in sluice,*** p. 102.

The minimum length for relatively deep, narrow sluices is 500 to 600 ft.; the sluice line at some mines is several thousand feet long, but this great length is as often for transport of tailing to a suitable dumping ground as for saving fine gold. Maximum length of Alaskan sluices is about 200 ft., limited by flat slopes; coarseness of the gold permits reasonable recoveries. Length may be less in hydraulicking than with shoveling because disintegration is effected ahead of the sluice.

Width is the first factor to be considered in design. Proper width depends on maxima and minima of available water, slope, and the size and quantity of boulders that must be transported. Newman (*loc. cit.*) relates width to water, which in turn is determined by the amount and size of solid to be carried (p. 103). Newman's figures are: for 200 to 300 miner's inches, 24-in. width; for 400 miner's in., 30-in. width; 600, 36-in.; 1,000, 40-in.; 1,500 to 2,000, 48-in.; 3,000, 60-in.; when grades are 5 to 7 in. per 12-ft. box, and average gravel and boulder conditions, corresponding to a duty of 3 cyd. per 24-hr. miner's inch. Williams (56 *MM* 218) recommends a wide sluice in order to insure less velocity change across the box. See also ***Water-carrying capacity.***

Drops up to 12 in. in height in the line of boxes are of use in breaking up cemented and clayey gravel and in causing gold to settle in the riffles. Drops of 3 or 4 in. should be allowed at junctions and branches.

Curves lessen the velocity of the stream and cause deposition of solid matter with resultant clogging of the sluice. They should be made as gradual as possible.

Wilson recommends elevation of the outer edge 1 in. for every degree of curvature and an increase in slope of about 1 in. per box for a short distance (2 or 3 box lengths) below the curve.

Mud box or **dump box** (Fig. 72) is frequently used at the head of a sluice line when material is fed in batches, as by horse scraper, drag line or derrick bucket or the like, and contains much clayey or cementing material, or when water is scarce. In it the material is worked over and disintegrated by means of a coarse-tined rake or fork, and large boulders are removed. It may be riffled or not. If so, rock riffles are usual. The slope is steeper than in the main string, usually about 1 in. per ft. Much coarse gold is caught here, and clean-ups should be frequent. Usual length is 12 to 15 ft. but some are 100 ft. long and worked mechanically. Riffling is pole, block, or rail.

Undercurrent is a device used in connection with sluice lines to catch fine gold from the finer material fed to the sluice. In order to treat the material in a thin film and thus get the turbulent current and small settling distance necessary for catching fine gold, the undercurrent is made wide; it must be made correspondingly steep in order that the water may have sufficient velocity to move the gravel. A perforated screen or a grizzly usually with 3/8-in. to 1-in. openings is set with its upper surface about 1 in. below the top of the riffles in the main sluice. Grizzly bars ordinarily run lengthwise, but transverse setting may

be used when water supply is ample. The area and aperture of the grizzly must be such that the main sluice is not robbed of so much water that it will not carry the coarse tailing. Undersize is led off in a converging launder, with suitable distributing devices to spread the feed evenly across the width of the undercurrent. The latter is proportioned to the size of main sluice and the quantity of gravel carried. Normally it should be located near the end of the main sluice.

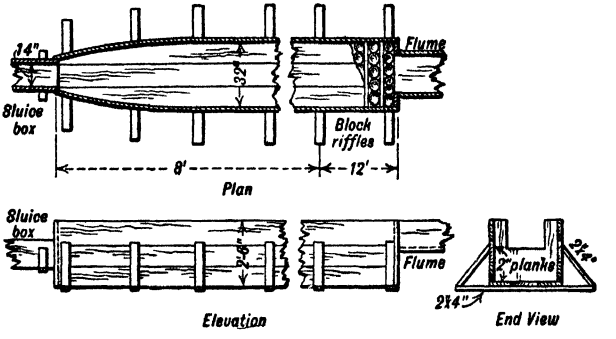

FIG. 72. Mud box.

The WIDTH is usually 5 to 20 times that of main sluice and the length ranges from 10 to 50 ft. Welton (*loc. cit.*) recommends an undercurrent 20 ft. wide and 30 ft. long for a 4- to 5-ft. sluice. He also recommends dividing such an undercurrent by longitudinal walls into four sections, thus allowing three to be run while one is being cleaned up and reblocked. This is a good arrangement, since the undercurrent must usually be cleaned up more frequently than the main sluice. The USUAL SIZE of undercurrent in Alaska for a 12-in. sluice line handling 400 to 500 cyd. per day is 20 ft. square. The SLOPE is usually about twice that of the main sluice; *Bowie* recommends 12 in. per 12-ft. box for longitudinal plank or pole riffles, 14 in. for blocks, and 16 in. for stones. RIFFLES are of the same types as used in the main sluices, except that wear is less severe and gold catching more important. Blankets, burlap, or matting with screen cover are also used; they should be washed every day or so. Mercury is usually used. Riffles are placed also in the distributing launder. TAILING is usually led back into the main sluice. The RETURN SLUICE should enter the main sluice at an acute angle and with little or no drop, in order not to interfere with the flow in the main sluice.

Recovery in undercurrents varies according to the character of the gold and the sluice treatment preceding. Welton says that an undercurrent following 500 ft. of sluice should make 10 to 15% of the total combined recovery, but this is high for usual practice. It frequently runs as low as 2%. When less than 5% recovery is made, it becomes questionable whether the installation pays its way. When mercury is used in the main sluice, undercurrent may be necessary as a guard against amalgam loss.

Tables are short, wide sluices, usually set on a relatively steep slope, taking a finer feed than the ordinary sluice and usually operated with some mercury in the riffles. Their principal use is on gold dredges (see Sec. 2, Art. 21).

Hutchins (*105 J 861*) describes a table installation in Siberia where material through a 1-in. screen was treated on tables 10 ft. wide by 30 ft. long set on a slope of 2.25 in. per ft., the tailing after passing through a 0.5-in. screen passed over a similar set of tables on 2-in.-per-ft. slope, and this tailing after screening through a 1/4-in. screen was sent over a similar set of tables on 1.5-in.-per-ft. slope. There were a few riffles on these tables, but sand packed behind the riffles and spoiled their usefulness. Very little gold was caught, most of it being caught in the sluice preceding the tables. It will be noted that this is an undercurrent installation.

Perrett (*122 P 417*) argues for tables as opposed to the ordinary sluice on the score of compactness, low water consumption, and high gold saving. He cites a Russian plant with tables 38 ft. long on which 97.56% of the total recovery made was made on the first 10 ft., 1.95% on the following 14 ft., and 0.49% on the last 14 ft. The loss was 0.6 grain per cyd.

Water consumption is extremely variable.

Hutchins (*105 J 861*) states that ordinary cemented gravel from CALIFORNIA DRIFT MINES requires from 7 to 13 cu. ft. of water per cu. ft. of gravel and hard cemented gravel requires from 20 to 27 cu. ft. on the average. *Bowie's* figure for NORTH BLOOMFIELD, treating mostly top gravel in 6-ft. sluices with block and rock riffles on a slope of 0.54-in. per ft., is 18 cu. ft. of water per cu. ft. of gravel and at LA GRANGE, in a 4-ft. sluice with block riffles on a slope of 0.25 in. per ft., 56 cu. ft. Purington (*Bul. 263 USGS 142*) gives 40 cu. ft. of water per cu. ft. of gravel with block riffling on 0.33 in. per ft. slope under most favorable conditions in SOUTHEAST ALASKA. In the ATLIN DISTRICT, B. C., with pole riffles on a slope of 0.67 in. per ft., 20 cu. ft. of water per cu. ft. of gravel was used. At the Bowlder Creek mines of SOCIÉTÉ MINIÈRE COLOMBIE BRITANNIQUE a 24-in. sluice on a slope of 0.5 in. per ft., with block and rail riffles, required 80 cu. ft. of water per cu. ft. of gravel, of which 50% was boulders

18 to 30 in. diam. A KLONDIKE bench-gravel sluice, 24 in. wide on a 1-in.-per-ft. slope, with block riffles, required 20 cu. ft. of water per cu. ft. of gravel. 12-in. sluices in ALASKA in shoveling-in work require 45 to 90 cu. ft. of water per min. Hutchins gives 80 cu. ft. of water per cu. ft. of gravel as an example of inefficient washing of clayey gravel in SIBERIA. Consumption on NEW ZEALAND GOLD DREDGES is given (*16 MM 81*) as 75 cu. ft., while on tin dredges about 20 cu. ft. is provided. Perrett (*122P 417*) says that not over 33 to 40% of the amount of gravel can be washed in a sluice with a given amount of water that can be washed in a plant equipped for removal of oversize, with subsequent treatment on gold tables. (See also Sec. 2, Art. 20.)

Operation (see also Sec. 2, Art. 20) consists in keeping gravel running through the sluice, undercurrent, or table, until the riffles are so filled with concentrate that an excessive amount is going into the tailing, then cleaning up. Prevention of clogging, with maximum duty of water, requires a steady flow of water, adapted to the slope of the sluice and the maximum size of gravel. Any marked departure from this optimum will cause scouring of settled sand, with attendant loss of gold, or excessive sedimentation and plugging of the sluice line, which imposes additional cost for sluice tenders. Rigorous exclusion of oversize material will tend to prevent plugging and will save much wear and tear on the sluice line. On the other hand, packing in riffles may sometimes be remedied by sending more coarse material into the sluice line. The time between clean-ups depends upon the sluice and the character and quantity of gravel treated. The interval should be made as long as possible, especially at operations where the water season is short. Uusually the head sluices are cleaned up at approximately regular intervals of 1 to 4 weeks, as dictated by experience, while the tail sluices are cleaned only once or twice per season and are depended upon to catch any gold that passes the head sluices by reason of too great an interval between clean-ups. Dredge clean-ups are more frequent because of the relatively short sluices and greater danger of tailing loss.

Cleaning up. Practice varies. Commonly the supply of gravel is stopped and clear water run until the tops of the riffles are clear of gravel. The flow of water is reduced. The riffles are then lifted out, beginning with the first box, and washed carefully into the sluice. Any fabric in the sluice is removed at the same time and carefully rinsed into the box, or scrubbed in a tub. Fabric ready for discard is dried and burned and the ash washed. After all the riffles in a given section, say 100 ft., have been removed, a light flow of water, just sufficient to move the material slowly, is turned on and the concentrate is carefully and slowly turned over by means of wooden paddles 3 or 4 in. wide pushed upstream along the bottom. Rocks are thrown out by hand. Welton (*20 IMM 172*) describes a special clean-up shovel made of light sheet steel with flat bottom, sides turned up 1 in. and back sloping at 45° to the bottom. The shoveler faces downstream to pick up a load and turns around and holds the shovel in the stream, when light material is washed over the back, leaving rich concentrate on the shovel. As material works downstream, a head of enriched material is left behind. This is carefully collected and further concentrated in a pan or rocker, with or without mercury, as circumstances dictate, or it may be brushed against a flat stone in the sluice, which serves as a planilla (Art. 34). (When the gold is amalgamated, iron or granite pails, not galvanized or tinned, should be used for collecting concentrate.) The succeeding section is next treated in the same way, or, in some cases, concentrate from the lower sections is carried in pails to the head of the first section and there cleaned. Finally gold is collected from crevices by means of a brush and scraper, or a pointed amalgamated-copper spoon. Considerable gold may get so far into crevices that it cannot be collected in this way. Such gold is recovered, when the sluice is worn out or the working is abandoned, by burning the sluices and panning the ashes. Ellis (*100 J 993*) states that some Alaskan boxes on burning have yielded as much as an ounce of gold.

The time required to clean up and reblock 100 ft. of 4-ft. sluice is about 4 hr. (*20 IMM 208*). When time is an important element, the clean-up may be carried only to the point of washing out light sand, when the heavy sand concentrate with contained gold and amalgam is shoveled out and further concentrated in pan, rocker, or small sluice, or it may be sold or treated with mercury and cyanide in a tumbling barrel.

Distribution of gold in sluice. The bulk of the gold content of gravels settles to the bottom of the sluice with great rapidity and resists transportation with extraordinary tenacity.

Wright (*Gold Fields and Mineral Districts of Victoria, R. B. Smyth*) says that in a 12-in. sluice sloped 1 in 48, using 600 g.p.m., 95% of the gold was found within 3 ft. of the teed point, lying on a smooth board. *Bowie* states that at NORTH BLOOMFIELD 92% of the total yield was made in the first 1,800 ft. of sluice, 3.75% in 6,200 ft. of bedrock sluice following, 2.5% in undercurrents. He gives considerable detailed data of similar import. Purington (*Bul. 263 USGS 142*) gives the following data: South Coast region of ALASKA, gold bright and rough though fine, mercury used in boxes, 75% saved in the first 600 ft. MCKEE CREEK, Atlin, B. C., slope 0.67 in. per ft., block riffles, gold coarse, 85% saved in first box, all that it pays to clean up saved in the first five boxes (60 ft.) At another mine in the district no gold is caught beyond the first 250 ft. of boxes. ELDORADO COUNTY, CALIF., slope 1.1 in. per ft., car-wheel riffles, mercury in the boxes; 75% of the total recovery was made in the first foot, 8.4% in the next 10 ft., 9.6% in the next 50 ft., and 2% in the next 60 ft.; slightly less than 5% of the total gold recovered was caught in 2,380 ft. of rock-paved sluice following the first 1,000 ft. BONANZA CREEK, KLONDIKE, gold fine, bright, and smooth, 2-ft. boxes on 1-in.-per-ft. grade, block-riffled, 80% of total gold recovery was made in the first box, 85% in the first 180 ft., none in the last two boxes

in the 500-ft. string. Hutchins (*Bul. 263 USGS 190*) estimates that in small-scale Alaskan practice, shoveling-in to short strings (3 to 6) of 12-in. boxes set on about 0.5-in.-per-ft. slope, using pole riffles, about 80 to 90% of the gold fed is recovered but that most fine gold is lost. Bouery (*95 J 1056*) gives the data shown in Table 4 representing the distribution of gold in size and quantity along the

Table 90*a*. Distribution of gold according to size in La Grange sluice boxes (*After Bouery*)

Box. No.	>10-m.	10~50-m.	50~100-m.	100~150-m.	150~200-m.	<200-m.
5	45.80 oz.	50.70 oz.	1.38 oz.	0.36 oz.	0.31 oz.	1.45 oz.
6–16 incl.	18.00	83.30	2.33	1.00	0.31	0.83
22	1.73	20.22	3.08	0.70	0.25	0.62
48	0.18	2.18	1.06	0.12	0.05	0.16
88	0.018	0.12	0.47	0.008	0.026	0.005
136	None	0.053	0.027	0.043	0.011	0.01

La Grange sluice line. The table indicates remarkable horizontal travel of some of the coarse gold and probable lack of economy, from a gold-saving standpoint alone, in maintaining so long a string of boxes. It also indicates that only the more rounded grains of gold finer than 200-m. are saved and that most of those grains too small to settle in the early boxes do not settle at all.

Capacity. A string of 12-in. Alaskan boxes rarely handles more than 150 cyd. per 10 hr., but this is done easily if sufficient water is available. (*100 J 394, 122 P 417.*) Purington (*Bul. 263 USGS 142*) gives the following figures on Alaskan practice: In the South-Coast region a sluice 4 ft. wide × 4 ft. 10 in. deep, slope 0.33 i.p.f., paved with block riffles handled 5,000 cyd. of gravel and 200,000 cyd. of water per 24 hr. Atlin District (B. C.), 400 cyd. per 24 hr. of coarse heavy gravel were handled with 32,000 cyd. of water in a sluice 24 in. wide, 1,400 ft. long, slope 0.5 i.p.f., with block and rail riffles. Klondike bench gravel, 1,000 cyd. of gravel with 20,000 cyd. of water in a sluice 24 in. wide, 20 in. deep, slope 1 i.p.f., block-riffled.

At Y-Water in Australia sluices for treating tin gravels at the rate of 100 cyd. per hr. are four in parallel, each 10 ft. wide by 3 ft. deep by 180 ft. long. The area of sluices on Australian tin dredges ranges from 8 to 43 sq. ft. per cyd. treated per hr., all late installations ranging between 30 and the higher figure. The corresponding figure on gold dredges is about 23 sq. ft. in Australian practice and 37.5 sq. ft. in English practice (*16 MM 81*). Purington and Smith (*15 MM 148*) state that a Russian sluice 29 in. wide, 18 in. deep, and 280 ft. long, sloped 14 in. in 12 ft., fitted with T-grate riffles and inverted rails set both longitudinally and transversely in different sections, treated 1,100 cyd. (place measure) per 18 hr. and made 96% recovery, 88.3% being made in the first third. *Van Wagenen* gives figures of 100 to 200 cyd. of ordinary gravel or 60 to 80 cyd. of cemented gravel per man per 10 hr., but this is for sluice-box operators only and does not include delivery of material to the boxes. Hutchins (*Bul. 263 USGS 190*) gives about 5.5 cyd. per man shift when shoveling-in and Purington's figures for the same operation range from 2.75 cyd. per 10 hr., where large boulders interfered, to as high as 12 cyd. with 3-ft. bank and 5-ft. lift.

Recovery. Purington estimates (*Bul. 263 USGS*) that even with the coarse gold prevailing in Alaskan deposits, recovery is, at best, 80 to 90% in simple boxes with no undercurrents; that the average for small operations is 70 to 80%, and that 50% is not uncommon, especially with tough, sticky clay, balls of which hold gold, and rob the riffles of gold and amalgam.

Use of mercury in sluices is local rather than general custom. Use is relatively rare in Alaska and was relatively common in California. This probably followed from the character of the gold, which while perhaps as fine in Alaska deposits as in California, was granular, while the fine California gold was scaly and bright and mercury was both necessary and highly effective. Hutchins (*Bul. 263 USGS 204*) recommends its use wherever fine gold that will amalgamate is present. In sluices it is usually added only in the first two or three boxes, rarely to the first quarter or half of the string. It is commonly used on undercurrents and tables. The finer feed is not so liable to splash it out of the riffles and flour it as the coarse gravel in main sluices and the short length of these devices demands the aid of mercury to keep down the values in the tailing.

Mercury is usually introduced after the riffles have sanded up. It should be put in in such a way as to minimize flouring and in an amount insufficient to flood the riffles. The endeavor should be to maintain as large and as clean a surface of mercury as possible without causing excessive travel along the sluice. In some plants mercury is not introduced until just before the clean-up, in which case its purpose is not so much the recovery of gold as aid in collecting it. A low-grade gold analgam (mercury containing a small amount of gold) is more effective than clean mercury.

The quantity used, according to *Bowie*, is about 3 flasks (225 lb.) in the upper 200 to 300 ft. of a 6-ft. sluice. A 24-ft. undercurrent will require 80 to 90 lb. For price range see Sec. 2, Art. 21. In 5- or 10-lb. lots quoted market prices may be more than doubled. Loss ranges from 5 to 10% under best conditions to as much as 25% with steep grades, heavy gravel, leaky sluices, or when clay or organic materials induce flouring. Fouled mercury loses its collecting activity. Straining through chamois, washing with cyanide solution or grease solvents, or retorting are the usual methods of cleaning, listed in order of increasing effectiveness. Common practice on dredge tables ranges from 1/10 to 1/4 lb. per sq. ft. (*IC 6787*).

Loss of mercury depends principally on the quantity used, the character of the gravel, the type of riffles, and the intervals between clean-ups. *Bowie* gives the loss at La Grange as 0.00024 lb. per cyd. He states that at North Bloomfield it was 11 to 25% of the total used and was greatest in the rock sluices, which were cleaned only at long intervals. At the same mine, with light gravel, low slope, and little water the loss was from 4.4 to 6.1%.

Costs. Williams (*56 MM 218*) gives 30¢ per cyd. for shoveling-in operation in easy ground to $1 in tough ground; for group sluicing (distribution of water by pump to a number of elevated single sluices set to suit the requirements of different patches of ground), 30 to 35¢ per cyd.; minimum workable value of ground for such operation, 55¢ per cyd. Costs at large mines with mechanical or hydraulic means for loading the sluice are much lower (see Sec. 2, Art. 20).

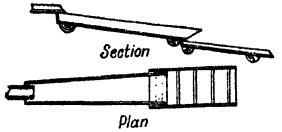

FIG. 73. Long tom (*after Bowie*).

Long tom (Fig. 73) is a small sluice with greater capacity than a rocker but it requires more water. It consists of a sloping trough about 12 ft. long, 15 to 20 in. wide at the upper end, flaring to 24 or 30 in. at the lower end, with sides 8 to 12 in. high. A perforated plate with 3/8- or 1/2-in. holes, set level or slightly inclined, is fitted at the lower end. The usual slope of the trough is 1 to 1 1/2 i.p.f. Slopes of 3 to 4 i.p.f. are used for fine beach sands in Alaska. A wider and usually shorter trough with transversely riffled bottom, set on a flatter slope, follows the first and receives the undersize from the screen.

Manipulation. Gravel is shoveled into the upper trough and water is led in by a flume at the head end. The operator works the gravel over thoroughly, forks out the boulders, and works fine material through the screen. Coarse gold settles in the upper box, and fine gold is caught behind the riffles in the lower trough. *Wilson* recommends that the slope of the riffled box should be so flat that fine mud will collect therein, thus insuring that fine gold is not scoured out, but this will result in sanding behind the riffle cleats to such an extent that their protective function for fine gold is defeated and the bottom will become merely a transversely undulating sandy surface.

Capacity varies with the kind of gravel and size of screen perforations and is limited by what a man can work through the screen. *Wilson* states it to be 6 cyd. of ordinary light gravel or 3 to 4 cyd. of cemented gravel per 10 hr. with 2 men working, one shoveling in and taking care of tailing and the other working the upper box. *Van Wagenen* gives 5 to 6 cyd. of ordinary gravel or 3 to 5 cyd. of cemented gravel per man per 10 hr., but this is undoubtedly too high.

Applicability. The long tom uses much less water than a sluice but at the expense of more labor. It saves a given amount of gold in a shorter linear distance. It has, therefore, been used in small-scale placer work where water and lumber were scarce, and has also been rather widely used on dredges for cleaning up black-sand concentrate (*115 P 825, 113 J 251*). Williams (*56 MM 218*) states that the tom is used widely in GUIANA. Usual crew there is 3 men: hoeman, spademan, and an alternate; additionally 1 or 2 bailers may be necessary. Capacity with such a crew is 5 cyd. per day. In loose, sandy ground 50¢ gravel can be worked, but in the smaller creeks it is doubtful whether gravel carrying less than $1 per cyd. is workable. Great disadvantage is the lack of transport of tailing and consequent tendency to cover unworked ground.

Surf washer (*IC 6786*) is similar to long tom, but made wider and shorter, and is set so that surf runs up, washes material through screen box and, on receding, carries away tailing. One man can run 2 and has run 8 cyd. in 10 hr. A variant comprised a simple sluice 3 to 4 ft. wide, 8 to 10 ft. long, 4 to 5 in. deep, sloped 8 to 10 in. in 12 ft., with 1×1-in. riffles, spaced 1 in., arranged transversely at the ends and longitudinally in the center section. The whole was set on sills weighted down with stones at a point such that waves ran to the top but receded from the lower end sufficiently to carry away tailing. With a good surf, 2 men shoveling-in could be kept busy.

Dry washer. See Art. 36.

Gold traps are small cones or pyramidal boxes, usually less than 18 in. across at the top, with hydraulic water supply near the bottom, with or without various types of internal baffles, which are placed in the line of flow of pulps carrying coarse gold. A bed is maintained in them by the stirring action of the pulp stream and the hydraulic water. They are provided with a locked cover and a locked plug valve; concentrate is drawn intermittently, as necessary. They are extremely effective in catching coarse gold; they also catch a considerable part of all but the finest, if not so baffled as to set up strong scour. Some mines report as much as 75 to 80% of total gold recovery made in traps following the grinding mills. (See Sec. 2, Fig. 50.)

SINK-FLOAT SEPARATION

General. Sink-float separation is, superficially, the heavy-liquid test of the mineralogist modified for continuous treatment of large tonnages. Ostensibly it consists in subjection of a mixture of solid particles of different specific gravities to the buoyant action of a quiescent body of fluid characteristics, having such density that it will float the lighter solid particles while the heavier sink, gravity being the only impelling force. Such an operation is typified familiarly by introducing a mixture of sand and sawdust into a pail of water. Actually, however, in commercial operations, the solid particles are introduced into the heavy-fluid body with considerable downward momentum; the fluid body is constrained

to flow in more or less regular paths in the separating vessel, at velocities that have definite effects on the separation; the viscosity, real or pseudo, of the medium is an important element in the motion of the solid particles therein, and time may be an element in the separation.

Flowsheet of a plant employing sink-float separation is, of course, dependent upon the raw feed. In coal separation sink-float may be the only concentration method employed, or it may be supplemented by table treatment of fines. In treating the usual ores, the function of sink-float separation is to discard tailing, hence the flowsheet comprises (*a*) crushing to a size that frees tailing (3/4-in. to 2-in. is the range of maximum sizes in present-day commercial operation); (*b*) screening out undersize too fine for satisfactory sink-float treatment (1/2- to 3/8-in. is usual today—1941), (*c*) washing oversize to remove slime and soluble salts which might affect the suspension properties of heavy-medium slime and accidentally introduced slime, (*d*) floating tailing in a heavy medium; (*e*) crushing heavy-medium concentrate and joining it with undersize from raw feed for treatment by gravity concentration, flotation, or other applicable method.

Sink-float processes may be classified as QUICKSAND processes, in which the heavy medium is sand maintained in suspension in water (or dilated by differential air pressure); SUSPENSOID processes, in which very fine sand and slime are maintained suspended largely by chem-electrical means; and HEAVY-LIQUID processes in which the heavy medium is a true liquid.

Quicksands

Quicksands have a lower effective density than beds, because their greater dilation lowers both composite density and plastic resistance. They must, therefore, employ continuous and appreciable upward impulse to supplement buoyancy in order to effect separation. They are formed either by causing water or air to flow upward through a column of sand with sufficient velocity to cause dilation of the column; or by stirring a sand-water mixture; or by utilizing both means together. Quicksand concentrators differ from bed-type in the continuity of the dilating force; there is little difference in buoyancy between a light bed and a heavy quicksand.

27. DIAMOND PAN

Description. The diamond pan is a quicksand separator in which the sand-supporting force and the upward impulse are obtained by rotary agitation alone. The apparatus comprises a shallow tub in the form of a cylindrical annulus, 5 to 20 ft. outside diameter, inside diameter about 0.3 times outside, outer wall ranging from 10 to 18 in. high as diameter ranges from 5- to 20-ft., and inner wall 3 to 6 in. lower than outer. A post supported by a step and an overhead bearing is set on the axis of the tub and carries a number of radial arms (6 on 5- and 6-ft. pans, 8 on 8- and 10-ft., 10 on 14-ft., etc.) at a level slightly above the outer rim. From these arms KNIVES or TINES extend downward to within 1/4 to 1 in. from the bottom of the pan. They are 3/4- or 1-in. high-carbon steel rod, forged triangular for the lower 6 or 8 in., tempered hard, and clamped to the arm. Tines are spaced about 4 1/2 in. apart on the arms, with corresponding tines on successively following arms spaced each 3/4 in. farther from the center of rotation. Successive impulses on a given particle of settled material are therefore as though from an expanding spiral. This effect is accentuated by so forming or pointing the blades as to have a component of push radially outward.

Feed enters tangentially through a subsurface slot near the bottom of the outer wall; tailing overflows an adjustable weir on the inner wall so placed that the runs of the feed and tailing streams are parallel and in the same direction; concentrate discharges across the annulus from tailing, at a point about two-thirds of the way around the tank from the feed inlet, through a shuttered hole, 1 1/2 or 1 3/4 in. diam., either in the bottom or at the bottom of the side wall. Best speed is a matter of experiment for a given feed, but is in the range of 300 to 400 f.p.m. peripheral.

Action in pan. Feed, which should contain a relatively high percentage of fine sand and considerable clayey material, and which, if thus composed, may have a limiting size as large as 1-in. (better about 3/16-in.) is introduced with enough water (±25%) to form a thick pulp. The stirring combined with the tangential feed entry sets up a swirl sufficient to cause vortical flow of the pulp mass as a whole. Hence the entering feed stream is introduced at a flat angle into a rising current of a quicksand made up to a large degree of the grains of intermediate specific gravity brought in by the feed. In this quicksand light grains of its size range float readily; large light grains are lifted by the rising current; heavy grains settle, or, at least, do not rise as far in the up-current as do the lighter grains. At the top of the swirling mass the surface layer, comprising the light material, flows down toward the center of the vortex and is skimmed off over the tailing weir. The heaviest grains gradually work to the bottom and are then plowed spirally outward to the outer wall and bled off through the concentrate shutter.

Since the carrying effect of the vortical stream depends both on the average specific gravity of the particles of intermediate gravity composing the quicksand and upon the plasticity of the mass as

determined by its clay content and the size of the sand grains, it follows that velocity, density, and plasticity must be properly correlated for optimum results. A heavy-grain quicksand requires less stiffness and less velocity of vortical flow; a lighter-grain quicksand must either carry more sand in suspension or be made less plastic; it can be made to do the former by increasing the rake speed; plasticity is decreased (stiffness increased) by increasing the clay content.

The quicksand minerals in the SOUTH AFRICAN diamond fields, which minerals must be drawn off with the settled concentrate at a sufficient rate to prevent them from building up to overflow level, are olivine (sp. gr. 3.3), staurolite (3.7), other ferromagnesian and ferroaluminum silicates, ilmenite (4.5–5.0), rutile (4.2), corundum (4.0), hematite (5.0), limonite (3.8), tourmaline (3.0), and diamond (3.5). The principal gangue mineral is quartz. A quicksand composed of these minerals alone in proportions to give an average sp. gr. of 3.5, would, at 25% solids, have a sp. gr. of 2.2. But because of a considerable content of coarser quartz, it is doubtful whether it will average higher than 2.0.

Operating controls are speed, pulp density, setting of tines, height of discharge, and feed rate. Essentially, control is a balance between buoyancy of bed and time-factor. Time-factor must be great enough to permit small diamonds to settle; rake speed, tine setting, and pulp density control the settling rate; feed rate and height of discharge determine time-factor.

Capacity is close to 1/4 ton per sq. ft. of pan floor per hr. This corresponds to a time-factor of about 3 min. for good operating conditions (*119 J 997; 47 MM 208*).

Power consumption is reported at about 0.3 hp. per sq. ft. of floor area (*ibid.*).

Recovery of 95% is considered good, using 2 or 3 pans in series; ratio of concentration is about 25 : 1 (*ibid.*) For further treatment of concentrate, see Sec. 3, Art. 2, and Sec. 12, Art. 17.

Applicability. The only extensive commercial use of the diamond pan has been in diamond recovery. Use is reported at a small copper mine in Rhodesia where 77% recovery was made on an ore containing 12% Cu as chalcocite; concentrate assayed 27% Cu. This is not, of course, as good work as could have been done on the same ore by jigging and tabling (disregarding flotation in both cases) but would have been cheaper.

Battelle gravity-flow concentrator (*50 MI 636*) maintains a quicksand and applies the necessary upward impulse by rising water. Apparatus is a trough inclined 8 to 17° (usual slope 12 to 15°) with cross pipes near the bottom perforated at the sides with holes 1/2 to 1 in. apart through which a small amount of water is introduced into <10-m. material fed at the upper end. The water and the flow down-slope form a stirred bed of the pulp through which the heavy material settles into an inactive zone below the pipes from which it is withdrawn through water-fed discharge pockets similar to the deep-pocket classifier. Tailing discharges at the lower end. The apparatus is applied to materials such as iron ore containing a high percentage of heavy mineral of low unit value.

28. CHANCE CONE

Chance cone separator for coal utilizes vigorous stirring in a conical tank, supplemented by a rising current of water both to effect suspension of the sand and to supply additional, upward impulse. For detailed description of apparatus and its performance, see Vol. 2. For general discussion of the action of suspensions in gravity separation, see Art. 29.

Suspensoid Media

Terminology. The word SUSPENSION, when used in this article, without qualification, denotes simply a solid dispersed in water with no regard to particle size, or to the force or forces causing the suspension. If Brownian movement and its attendant forces are the dominant elements in the suspension, and it is substantially devoid of sand-size grains it is COLLOIDAL OR NEAR-COLLOIDAL. A SUSPENSOID is a mixture of a colloidal suspension and sand-sized grains, so fine as to require but a small amount of agitation to maintain them suspended.

29. PRINCIPLES OF SUSPENSIONS FOR GRAVITY CONCENTRATION

Introduction. The buoyant power of a suspension is familiar to most country boys in the form of the ubiquitous quicksand, which is remarkable not for its alleged power to drag down and engulf unwary animals, but because it supports them to the extent that it does. A heavy-medium separator is simply a controlled quicksand. The first utilization of its properties in commercial ore dressing was undoubtedly in washers like the Robinson coal washer (*Ed. 1*), or the diamond pan.

Properties of suspensions. Very finely divided particles of most solids will remain suspended in still fluids more or less indefinitely, provided the fluid is of such character that the particles are in Brownian movement (see Sec. 12, Art. 8). The mixture has many true fluid properties. The suspended solid particles increase the apparent specific weight of the fluid, roughly in proportion to the weight fraction present. If the concentration of

solid is high, there is a marked increase in viscosity. As a result of these two changes, the power of the fluid to suspend sand-size solid is increased and the added sand causes further increase in the apparent specific weight and viscosity of the mixture, although now a certain amount of energy in the form of mechanically induced agitation must supplement the thermal agitation of the suspending fluid, if the suspension is to maintain homogeneity. Without the colloidal solid present the amount of mechanical energy input required is greater.

Apparent viscosity of a suspensoid (CONSISTENCY) is the time required for a given volume to flow through a tube under controlled conditions relative to the time required for an equal volume of water to flow through the same tube under the same conditions; in other words it is similar to the relative viscosity of a liquid. Apparatus for such measurements (CONSISTOMETER) and results of measurements therewith are given by DeVaney and Shelton (*RI 3469–R*). A summary of their results is shown in Fig. 74.

Nature of apparent viscosity may be inferred from study of Fig. 74, items *A* and *B*. Fine quicksands (item *A*) were made with 200∼325-m. solids of various specific gravities. The apparent viscosity increased at a relatively slow linear rate with increase in density of the suspension until a CRITICAL POINT was reached at from 17 to 30 volumetric per cent. of solids, whereupon the rate of change of viscosity increased rapidly through a relatively small change in pulp density until the mixture would no longer flow.

At the critical point the mean fraction of any plane through the mixture occupied by solid is $F^{2/3}$ and the mean distance along any line similarly occupied is $F^{1/3}$, where F = volumetric fraction of solid present. Table 91 gives values of these and other properties of these mixtures at the critical points.

Table 91. Critical and zero-fluidity values for several fine quicksands (*After DeVaney and Shelton*)

Solid	W	Critical values					Zero fluidity, 75 *cp.*			
		R_c	U_c	F_c	$F_c^{1/3}$	$F_c^{2/3}$	R_0	F_0	$F_0^{1/3}$	$F_0^{2/3}$
Quartz	2.65	1.3	7	0.182	0.567	0.321	1.8	0.461	0.772	0.596
Magnetite	5.2	1.7	4	0.167	0.551	0.303	2.8	0.419	0.748	0.560
Ferrosilicon (15% Si)	6.8	2.2	7	0.215	0.598	0.359	3.5	0.426	0.752	0.566
Galena	7.5	2.4	8	0.223	0.606	0.368	3.8	0.430	0.755	0.570
Atomized lead	11.3	4.0	16	0.290	0.662	0.438	5.6	0.446	0.764	0.584

Notation for Table 91.

W, specific gravity of solid
R, apparent mean specific gravity of quicksand
U, apparent viscosity of quicksand
F, volumetric fraction of solid present
c, subscript; critical value
0, subscript; zero fluidity

It is apparent from Table 91 and from Fig. 74, item *A*, that when the particles of a quicksand are so dispersed that there is on the average a diameter or more of clear liquid between them, they act in one way on the internal friction of the mixture, and that when they become more crowded than this, their effect and, inferably, their behavior change. Visual study (*CU*) shows that below the critical point collision between particles is rare; above it collision becomes increasingly frequent. The inference is that below the critical the particles act as obstructions or keys in the sliding planes of the liquid, offering resistance to sliding in proportion to their number and the nature of their surfaces; that above the critical there is superimposed on this resistance a further resistance due to the energy losses in inelastic impacts between the particles, that this loss cumulates with increasing frequency of collisions, and is greater the rougher the surfaces because of greater loss of momentum in oblique collisions. This hypothesis is supported by the fact that the most nearly equiaxed particles, *viz.*, atomized lead, can stand the greatest crowding before the critical point is reached; that galena stands closer spacing than quartz, and that rounded quartz and abraded ferrosilicon (Fig. 74, item *B*) show the effect at closer spacings than more angular fragments of the same materials.

Zero fluidity (chosen by DeVaney and Shelton as corresponding to 75 cp. apparent viscosity) occurs for all the fine quicksands studied within the narrow range of 0.419 to 0.461 volumetric solid fraction (Table 91), corresponding to a mean particle spacing of 1/3 of mean particle diameter. The volumetric solid fraction of spheres rectangularly packed is only 0.52. Hence very little differential motion (*e.g.*, the streamline flow in the consistometer) is required in such a mixture to effect a multitude of substantially inelastic impacts, whereupon packing occurs and friction between particle surfaces is added to the other resistances to flow to such an extent that fluidity disappears, and the mixture becomes a compacted bed (Art. 2).

Size of particle has a marked effect on the consistency-specific gravity relationship (see Fig. 74, *C* and *D*). The coarser the suspended particles the lower the apparent viscosity for a given specific gravity, but more agitation is necessary to effect and maintain disperaion, and consequently the coarse-particle media are the less satisfactory for close separations. The presence of slime of the medium material with coarser particles seems to have remarkably little effect on consistency within the normal working suspension-gravity range. Thus curve G_A, Fig. 74, item *D*, which is a reproduction of the galena curve on

Fig. 74, item *A*, and curve B on Fig. 74, item *D*, are both for <200-m. galena, but for curve G_A the <325-m. material was removed, yet at gravities between 2.6 and 3.0 the differences in apparent viscosity are almost within the limits of experimental error. Above

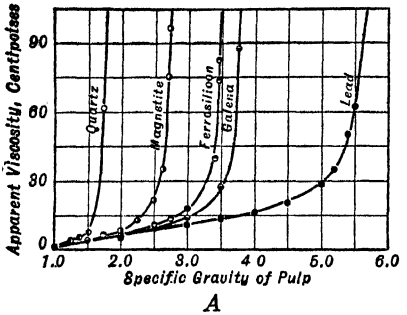

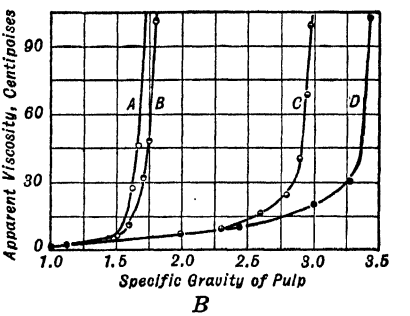

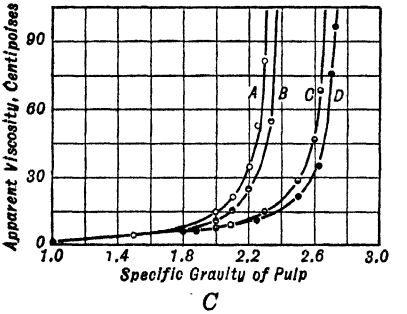

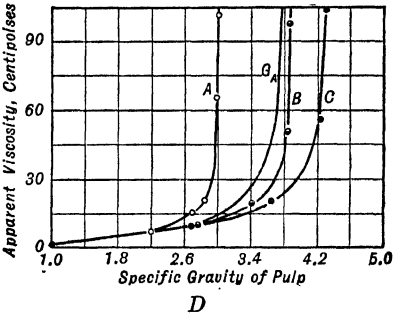

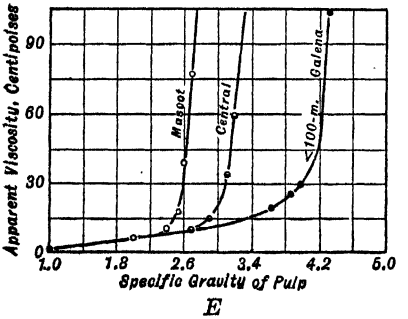

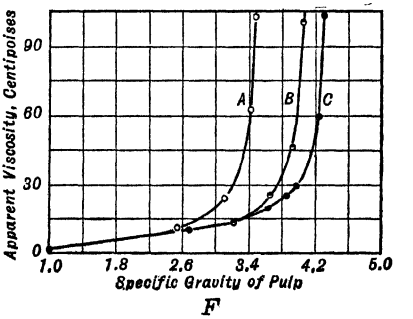

A. Effect of specific gravity of solid; 200~325-m. quicksands.

B. Effect of particle shape: Curve *A*, angular quartz; *B*, rounded quartz; *C*, new ferrosilicon; *D*, abraded ferrosilicon.

C. Effect of size of magnetite: Curve *A*, average diameter, 15.8μ; *B*, 25.7μ; *C*, 37.6μ; *D*, 51.7μ.

D. Effect of *mog* of galena: Curve *A*, <5μ; *B*, <200-m.; *C*, <100-m.

E. Effect of source and size of galena.

F. Effect of contamination on <100-m. galena suspensoid: Curve *A*, plus 5% clay; *B*, plus 5% <100-m. quartz; *C*, no contaminant.

FIG. 74. Consistencies of heavy media (*after Shelton and DeVaney*).

the critical points the differences are great. This is due largely to the much higher percentage of angular sand in the quicksand (curve G_A) as compared with the suspensoid of equal sp. gr. (curve B).

Certain ore and added clay slimes have, however, marked effects on the gravity-consistency curve (Fig. 74, item *F*).

Sizing tests of several media discussed are given in Table 92. The relatively small amount of coarse material in the commercial media appears to be tramp middling, presumably from the ore, *i.e.*, the galena is somewhat hardened by the contained sphalerite and silica, which is shown by the chemical analyses. The degradation that occurs in use is seen by comparing the MASCOT and CENTRAL pulps with the <100-m. galena, which is representative of the make-up feed.

Table 92. Sizing analyses of five suspended mixtures (*After DeVaney and Shelton*)

Size	Minus-100-m. clean galena, Curve C, Fig. 74, item *D*	Minus-200-m. clean galena, Curve B, Fig. 74, item *D*	Patrick medium (ferro-silicon) *a*	Mascot fines, galena *b*	Central mill galena			
					Weight, %	Assay, %		
						Pb	Zn	Insol.
Mesh								
>35	.....	.....	0.4	.....	0.3			
48	.....	.....	0.8	0.1	0.2	64.81	6.23	6.24
65	.....	.....	2.1	0.1	0.4			
100	.....	.....	3.2	0.2	1.4			
150	8.9	.....	7.2	0.3	3.7	72.77	5.96	2.36
200	19.1	.....	10.1	1.3	6.2			
325	32.9	45.7	17.2	3.6	10.3	73.05	4.72	6.06
Microns								
>25	15.2	21.1	34.0	28.3	28.7			
10	13.7	19.0	20.1	44.3	27.1	72.05	2.44	4.83
5	4.9	6.8	3.8	13.9	10.5			
<5	5.3	7.4	1.1	7.9	11.2			
Total.....	100.0	100.0	100.0	100.0	100.0	72.50	3.78	4.38
Sp. gr. solid..	7.4	7.4	6.3	6.05	6.6	.....	.....	.....

Note. Fractions of PATRICK, CENTRAL, and MASCOT media coarser than 65-m. are composed largely of ore particles.

a Contains 4.8% nonmagnetic material.

b Analysis: 63% lead and 4.1% zinc, comprising 73% galena, 6.2% sphalerite, and 20.8% gangue minerals, principally dolomite. The coarse galena removable by tabling is absent.

DeVaney and Shelton (*loc. cit.*) report comparative degradation tests in which >100-m. material, after 2 hr. tumbling, comprised 64.3, 56.8, 39.7, and 2.1% with quartz, 15% ferrosilicon, magnetite, and galena respectively; the corresponding percentages of <10-micron material were 1.8, 3.7, 5.2, and 20.3.

The maximum size of medium particle that can be suspended depends upon the medium gravity; with galena, 2.80 gravity is needed for 100-m. size, if agitation is to be slight.

Contamination in use increases apparent viscosity, or conversely, decreases medium gravity for a given working consistency. Fortunately the increase in consistency is not great, with galena at least, in the ordinary working gravity range (compare the curves labeled CENTRAL and GALENA on Fig. 74, item *E*). Fig. 74, item *F*, shows the effect of known contaminants; even clay has a relatively small effect on consistency, however, in the usual working gravity range. Contamination with low-gravity solid to the extent of 10%, as found in the CENTRAL medium, and 20%, as found at MASCOT, does, however, produce an important decrease in sp. gr., which must be remedied by cleaning (see p. 116). Contamination and degradation also cause marked decreases in sedimentation rates, which is important from the standpoint of thickening diluted medium. Fig. 75, item *G*, shows that 5% clay decreases the settling rate of <100-m. galena in the 2.2- to 2.6-gravity range to 1/20 or 1/30 of the rate of the uncontaminated material, and item *H* shows a similar decrease for mill contamination.

Slow settling at high densities, if accompanied by rapid settling at greater dilutions, would be of practical benefit, in that it would make for a self-supporting medium in the separator, where agitation is undesirable, and yet would require relatively small thickening area while preventing loss of medium solid in overflow. DeVaney and Shelton (*loc. cit.*) propose addition of bentonite to effect this end. Results of their experiments are given in Fig. 75, items *I* and *J*.

Self-sustaining medium is the desideratum for close separations, since it would eliminate all current effects; it would also be desirable from a purely operating standpoint, because it would not require running out when power failed, to prevent settling out and packing. Some operating galena suspensions are so nearly self-maintaining that they will not pack for several hours after agitation ceases, but pure galena must be ground very fine to attain this consistency. Normally media containing less than 70% solids by weight require stirring and upflow for maintenance; media containing more than 85% solids are usually too viscous for satisfactory operation.

Settling velocity in a suspension. When solid bodies that are large in proportion to the mean spacing of the particles of a suspension are introduced thereinto, the resistance

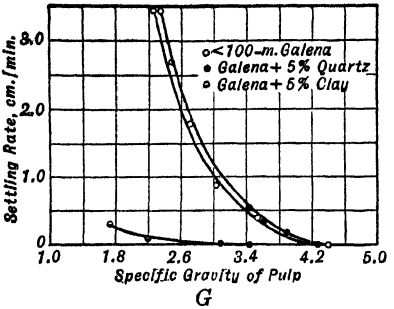

G

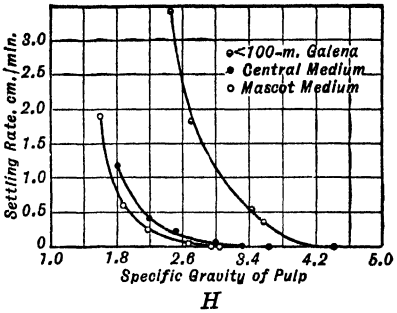

H

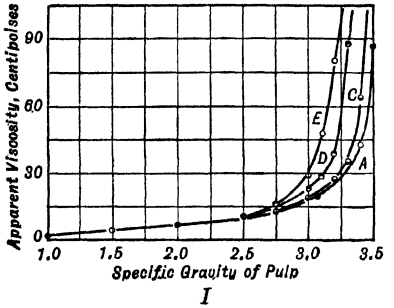

I

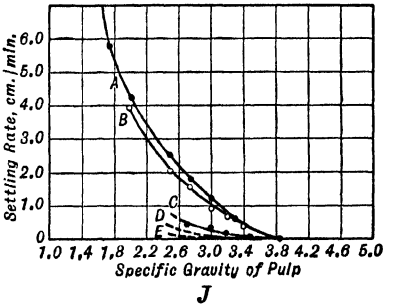

J

G. Contaminants as indicated.

H. Differences in purity and size. See Table 92.

I. Consistency of <200-m. ferrosilicon suspensoid, plus bentonite: Curve *A*, none; *C*, 0.3%; *D*, 0.6%; *E*, 1%.

J. Additions of bentonite to ferrosilicon (<200-m.) Curve *A*, none; *B*, 0.1%; *C*, 0.3%; *D*, 0.6%; *E*, 1%.

FIG. 75. Effects of contaminants on settling rates of suspensoid media.

offered is of the same nature as that offered by a true fluid in free settling, but both the buoyant force and the inertia resistance are larger by reason of the greater effective density, while the plastic resistance increases at a rate which visual observation indicates to be greater than the rate of rise in apparent viscosity. Experiment (*CU*) shows that the pressure at any depth in a high density suspension exceeds that at the same depth in a body of the supporting liquid alone by an amount directly proportional to the weight of solid suspended above the level of the plane of investigation. Visual observation of relatively dense sand suspensions, as in a jig bed, shows that in the process of gravitational penetration by a particle large with respect to the suspended particles and their mean spacing, the frictional resistance of the medium comprises both the internal plasticity of the suspension, such as is indicated by the consistometer tests, and a surface friction between the penetrating particle and a more or less consolidated mass of the suspended grains, which is of the nature of a slow-moving sand blast (Art. 2).

No data have been published on which to found an expression for settling velocities of introduced particles in suspensions in terms of the measurable quantities D (= mean diameter of introduced particle), S (= specific gravity of introduced particle), R (= effective specific gravity of suspension), and U_a (= apparent viscosity of the suspension relative to water = consistency). The best that can be done at present is to set up a general equation, on the assumption that the penetrating particle is free-settling with respect to the suspension and that the resistance is that due to inertia ($\propto V^2$), plasticity ($\propto U_a$), and skin friction ($\propto f$). Such an equation follows, in which V is the settling velocity of the introduced particle; K is a constant that takes care of units; f is a variable increasing at an unknown rate from an initial value of 1.0 as the volumetric fraction of solid in the suspension increases and as the angularity and roughness of the suspended and/or penetrating particles increase; and the other symbols have the meanings above stated.

$$V = \frac{KD^2(S - R)}{fU_a}$$

Solution of this equation for known cases when $R = 1$, $U_a = 1$, and $f = 1$, D is in mm. and V is mm. per sec., gives K. Using this value, and setting $f = 1 + F$ where F = the volume fraction of solid in

the suspension = $(R - 1)/(W - 1)$ where W = specific gravity of the medium solid, and using values of U_a estimated from Table 91, gives values of V that may be used for rough estimates of the effects of rising currents on separations.

Material for suspensions. Heavy media for commercial separations have been made with clay, quartz, slate, magnetite, galena, and ferrosilicon, as well as with mixtures of these solids; hematite, barite, pyrite, copper, high-carbon steel, and lead have been proposed and used experimentally. Water has been used universally as the suspending liquid, but there is no reason why a heavy aqueous solution or even a heavy organic liquid should not be used, except that such use would bring into play the disadvantages noted in Art. 31.

The factors important to consider in choice of a heavy-medium solid are: specific gravity, hardness, resistance to corrosion or other chemical action in aqueous solution; grain size, size distribution, and shape; sedimentation characteristics; properties lending themselves to separation from the products of concentration, recoverability, chemical composition, source, and cost.

Specific gravity must be higher than that of the mineral to be floated, as the combination of solid and water must have a combined gravity at least equal to that of the float mineral. Calculation of medium gravity is made from the equation

$$R = W/[p + W(1 - p)] \quad \text{or} \quad p = W(1 - 1/R)/(W - 1)$$

where p = decimal fraction of solids in the pulp by weight, and W and R have the meanings already assigned. The limiting values of p are not independently definable, but in general they lie in the range of 70 to 85%, being higher the coarser the solid particles and the smaller the content of colloidal slime. W must be >7 to produce a medium of 2.5 top gravity with proper liquidity. In general the maximum workable R for a medium with water the fluid is about $W/2$. The higher the value of W, the more fluid the suspension for a given value of R, but there is a practical limit in this direction in that suspensions with low volumetric solid fractions are hard to maintain.

Quartz-sand suspensions are used for coal cleaning; for most of this work $R = 1.5$ is sufficient. The maximum workable R attainable with quartz is about 1.8. This limits its use to a very small number of minerals.

Clay suspensions are not as dense as those made with sand, but they have been used for coal (*40 MI 650*). They are more viscous than sand for the same density, and hence the currents in the separating vessel have greater carrying power. Fine coal, which acts as a gravity-lowering contaminant, can be removed by froth flotation.

Magnetite (sp. gr. 5.0 to 5.2, but that available in commercial quantities varies considerably according to purity; hardness, 5.5 to 6.5) can be used for floating minerals heavier than coal, *e.g.*, brucite, chrysocolla, graphite, gypsum, or sulphur, but since 2.55 is about the maximum R of magnetite suspensions sufficiently mobile for use, it cannot be employed for floating the usual gangue minerals. It may also be used in conjunction with ferrosilicon.

Galena (sp. gr., 7.4 to 7.6; hardness, 2.5 to 2.75) will make a workable suspension of 4.3 sp. gr., if pure; with the normal impurities found in galena concentrates, however, and normal operating contamination, the usual maximum R at workable consistency is 3.3. It slimes badly in use and is more difficult to recover than either ferrosilicon or magnetite. Size used in one plant was:

Mesh	65	100	150	200	325	<325
Weight, % retained	1.2	0.8	1.2	2.1	6.8	87.9

Ferrosilicon, which is an alloy of iron and silicon with a small amount of carbon, has a sp. gr. over the range of usefulness from corrosion, permeability, and brittleness standpoints of 7.0 at 10% Si to 6.3 at 25% Si. Alloys of somewhat higher and lower sp. gr. at each composition can be obtained, the variation being due to differences in porosity. Alloys containing >22% Si are substantially nonmagnetic; those with less than 15% Si rust too rapidly. The maximum R for an alloy with 15% Si is about 3.5; 3.4 has been maintained in test operation at Butler Bros., but with normal plant contamination it falls to about 3.2; minimum is about 2.5 at about 70% solids. It is prepared by dry grinding in air-swept ball or rod mills. Dewatering is aided by magnetic clotting; dispersion is re-established by demagnetization in an a.-c. coil.

Ferrosilicon medium containing 15% Si is obtainable in standard grades No. 80 and No. 100 from Electro-Metallurgical Sales Corp. Typical screen analyses of the grades are:

Mesh	65	100	150	200	325	<325
Weight, % retained:						
Grade 80	1.4	8.6	5.9	9.7	15.4	59.0
Grade 100	2.4	4.1	4.2	9.2	14.9	65.2

The coarser grade is used for the higher sp. gr. Finer grades may be made by further grinding in a ball mill. Sp. gr. of this ferrosilicon is 6.7 to 6.8. Hardness is 7.3 to 7.6.

Ferrosilicon is difficult to wet. It should be wetted by stirring to a slurry and then permitting it to stand for several days in water. It must be thoroughly wet for satisfactory magnetic separation.

Lead is commercially available in atomized form, and from such powder a suspension of 6.2 sp. gr. can be made; suspensions of 5.2 sp. gr. are quite fluid. Oxidation in water or air to lighter products is

very rapid, however, and protective agents such as $S^{=}$, $CrO_4^{=}$, etc., would also cause more or less lightening of the suspension by reason of the reaction products.

Mixed minerals have been proposed as medium solid, one, usually clay or the like, contributing sustaining power, the other density. The higher the sp. gr. of the latter the less of it, of course, need be used.

Hardness is important in that it prevents loss of medium and increase in viscosity by reason of degradation. On the other hand, hardness great enough to prevent rounding off of edges and smoothing up of the surface is disadvantageous, because it induces such high viscosity that loading up to produce high specific gravity is not permissible. Ferrosilicon in the hard range (14 to 24% Si) suffers in this respect.

Resistance to corrosion and chemical action. The oxidized minerals and rocks (clay, quartz, shale, barite, magnetite, and hematite) neither corrode nor otherwise react harmfully with water. The sulphide minerals oxidize readily, to such an extent that their floatability, which is depended upon for separation from medium contaminants, is appreciably reduced. High-carbon steel rusts rapidly; lead oxidizes, probably to basic carbonate, to such an extent that heavy suspensions permitted to settle cement into a mass; copper oxidizes sufficiently for the suspensions to lose some density; ferrosilicon in the range of 10 to 15% Si is satisfactorily resistant to corrosion, and this resistance may be enhanced by adding a small amount of lime to the suspension.

Grain size, size distribution, and particle shape have somewhat related effects. In general the coarser the average grain size the more fluid the suspension, but the more agitation is required to maintain suspension. Correlatively, the longer the size range with a given maximum size, the more plastic and self-sustaining the suspension; the larger the weight fraction of very fine material, the higher the viscosity for a given loading and the lower the gravity, consequently, for limiting plasticity. The ideal size-distribution curve is one with a hump in the colloidal size range, contributing sustaining power, and another hump in the coarse end, adding density without corresponding loss of fluidity. Angular grains produce stiffer suspensions than rounded grains.

Quartz-sand suspensions, such as are used in the Chance process for anthracite and bituminous coal, are usually made of rather closely sized beach sand (20~100-m. with the great bulk of 40~80-m.). Galena and ferrosilicon used to make suspensions of 2.6 to 3.3 sp. gr. are ground to pass 100- or 150-m., with the grinding performed in such a way as to produce a maximum of slime (see Table 92). According to Rakowsky *et al.* (*U.S. 2 190 637/1940*) the coarsest galena sand in a self-sustaining medium of 2.5 top R is 150-m. At MASCOT galena jig concentrate is crushed to 3-m. only before addition to the medium supply as make-up, but by the time it gets to the separating cone, attrition has reduced it to 20-m. maximum and the percentage of this size present is too small to give any trouble. Isern (*PC*) states that with <5-μ. galena the maximum working R is 2.5, while with <100-m. R can be run up to >3.

Sedimentation character is important from the standpoint both of making and operating the suspension, and of reconditioning used medium. The ability of a solid particle to attain Brownian movement, or to attain the surface state which results in Brownian movement, if the particle is small enough, whereby, in either case, sedimentation is greatly retarded, depends upon its capacity to take on and hold an electric charge against its surroundings, and this in turn depends on a chemical reaction with those surroundings resulting in the formation of an ionized film at the particle surface. $CO_3^{=}$ and $PO_4^{=}$ produce such films on galena; $PO_4^{=}$ will produce them on iron compounds; OH^{-} is effective for quartz and clays, it may be present in sufficient quantity in the water itself, but usually a slight excess over pH 7 increases the effect markedly. On the other hand H^{+}, and bivalent and trivalent metallic ions tend to have a flocculating effect, probably by decomposition or solution of the ionized surface compound, or suppression of the ionization. Hence colloidal suspension of minerals is a result of a proper combination of a mineral and its chemical surroundings. Unfortunately the chemistry of the complicated solutions resulting from the immersion of ore pulps in water is not sufficiently well known as yet to enable prediction of the kind and amount of ion necessary to effect Brownian movement in any particular medium-ore combination, and this must, therefore, be a matter of trial in most cases, with agitation always a standby for loss of viscosity.

Bentonite DISPERSES (attains Brownian movement) with remarkable ease in water over a wide pH range and thus dispersed in low concentrations has a remarkable effect in retarding sedimentation of other solids without greatly affecting the consistency of the suspension (*RI 3469-R*).

From the standpoint of operation, the settling rate of the coarsest medium particles must be less than that of the smallest sink particles, otherwise the latter would become a part of the medium or the former would settle and pass out with the concentrate.

When thickening is the desideratum, as is the usual case after washing of medium from the products of separation, flocculation of the medium is desired to enhance sedimentation.

Then the chemical treatment is the reverse of that employed in dispersion. With magnetic materials, magnetic flocculation is induced. The safest procedure for calculating thickener size is to use the method of Coe and Clevenger (Sec. 15, Art. 6).

Recovery properties. No matter how clean a feed is washed in commercial operation before introduction to the heavy-medium bath, it always adds thereto a certain amount of sand and, usually, a greater amount of slime material. In so far as this derives from the lighter minerals of the feed, it lowers the density of the bath; in so far as it is clayey, it is likely to increase viscosity to the point that the suspension must be diluted to keep it workable, or the contaminant must be removed. With coarse-sand suspensions clay can be removed by sedimentation, but with slime suspensions gravity methods of reconditioning and recovery of medium solid are not available. Galena is recovered by flotation and this method is likewise available for pyrite and for metallic copper; coal may be tabled or floated from quartz sand; magnetite and ferrosilicon of less than 15% Si are highly permeable and are readily recovered on low-intensity wet magnetic separators. Efficient methods for reconditioning hematite and barite are not known.

Chemical composition of medium solid must be such that the small amount remaining in concentrate after washing (see p. 116) will not constitute a harmful contaminant. From this standpoint the use of galena at EAGLE PICHER (Sec. 2, Fig. 117) and of ferrosilicon at BUTLER BROS. (Sec. 2, Fig. 87) is ideal.

Source of medium solid is ideally the ore itself, but circumstances usually impose an extraneous source. Cherty-slate sand screened from tailing has been used in the Chance process; clay from a seam directly underlying the coal was used at PITTSBURG MIDWAY COAL CO. (*40 MI 656*); and the galena used at EAGLE PICHER is flotation concentrate produced in the same mill; the tailing from reconditioning is thrown back into the mill-flotation circuit.

Differential-density separation is the term applied to a sink-float operation in which the medium is purposely *not* maintained homogeneous in density from top to bottom at the specific-gravity figure at which separation is desired, but is so controlled, by agitation, and by feeding medium of different gravities at different depths, as to increase in density from the top downward, through a sp. gr. range of 0.1 to 0.2 points, the CRITICAL or SEPARATING DENSITY being placed at some point in the medium body well below the surface, and top density being held at about 0.05 less than that of the lightest float. Feed is introduced, either by plunging through the surface or by introduction into the side of the medium body at a point below the level of critical density, so that the initial or rough separation takes place at a density above the critical, whereupon clean heavy material sinks and clean light material floats part way to the top immediately, while middling, rising more slowly, assumes an intermediate position.

With top density maintained at a lower value than that of the desired float, further work must be done on the float particles to overflow them. This is done by maintaining a rising current of medium in the body, controllable in velocity by the rate at which medium is fed. Middling is displaced by further middling brought in by new feed, the downward reaction of the body of middling continuously suspended plus that of the rising float serving to give the displaced material a resultant downward motion. The rate of variation in medium density from top to bottom is rarely uniform. Small changes in the location of the zone of critical density are not serious.

A rising current of suitable velocity has controlling effect only on the particles that normally would remain just suspended in the medium at rest. These comprise the middling particles and the smaller particles of sink. The unmistakable sink and float particles are little affected.

The asserted ADVANTAGE of differential-density operation is that it separates in a zone of real and controllable depth rather than at a horizontal plane, with the results that the float layer is not crowded (RAFTING) and that middling and sink particles do not have to penetrate downward through a float layer. Another advantage is that water carried in by the feed is largely swept out immediately and does not dilute the bulk of medium in the separating vessel. The DISADVANTAGES are the large volume of overflow medium that must be recovered from the float and pumped back, and the fact that separation is actually dependent on current forces rather than simple buoyancy and is consequently subject to the irregularities caused by eddying. There is also a tendency toward sedimentation of large medium solids, which causes a bottom condition called CROWDING, in which the viscous resistance of the medium is so great that the settling sink has difficulty in penetrating it and so discharges in surges, carrying masses of the crowded medium with it.

30. PLANT OPERATION WITH SUSPENSOID MEDIA

Foreword. The material of this article, except as indicated otherwise by annotation, was compiled from patents, from sales literature issued by the licensing companies, and from articles in the technical press written by employees or representatives of these companies.

Apparatus comprises essentially a tank for containing the medium, means for agitating the medium as desired, and means for feeding ore and for taking away the SINK and FLOAT products.

Separating tanks (Fig. 76) are designed to fulfill the usual requirements in a separator, *viz.*, presentation of feed, maintenance of a flexible separating zone, and removal of products. In item *A* the structural elements are the conical tank *t*, with cylindrical rim *r*, edge overflow *v* for float, and central column *d* carried by girders *m*, which, by reason of air introduced through *p*, serves as an air lift for removal of sink. Hollow shaft *s*, surrounding *d*, carries scraping blades *n* on arms *q*, and is driven slowly by a bevel gear at the top. Make-up medium is fed through pipe *k* and medium drained from products by a launder *l*.

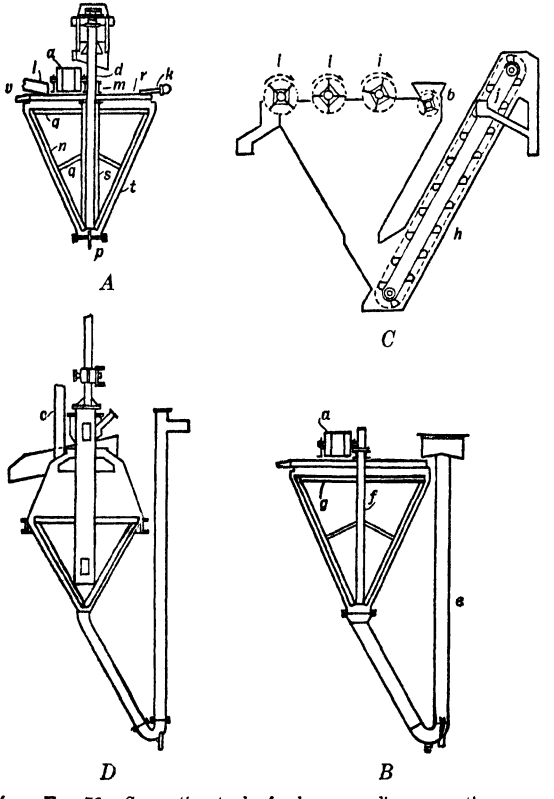

FIG. 76. Separating tanks for heavy-medium operation.

In two-product sink-float separators the fundamental design requirements are best satisfied by a downward pointed tank; this is conical in items *A*, *B*, and *D*, pyramidal in *C*.

Separating zone in all forms extends from the surface of the suspension downward to the point to which the heaviest feed particle eventually discharged as float penetrates under the impetus of introduction. Below this point the tank converges, in order to utilize gravity to move the sink to the discharge point. Above, it diverges, as in items *A*, *B*, and *C*, to afford increasing freedom of movement to rising particles and opportunity for entrapped sink to disengage, if the primary aim is clean float; it converges above, as in item *D*, and a sensible rising current of medium, increasing upward because of the convergence, is maintained, if high capacity is the prevailing desideratum, and float assay is secondary. Thus item *A* is the form used at MASCOT (Sec. 2, Fig. 102); item *B* at EAGLE PICHER, Central mill (Sec. 2, Fig. 117); and item *C* at HALKYN (Sec. 2, Fig. 107), to rough out low-grade tailing from zinc and zinc-lead ores; item *D* is used at several hematite mills (Sec. 2, Art. 28) to sink a salable iron product while, owing to the low unit value of this product, a relatively high-grade float is permissible, but high tonnage is essential. DIAMETERS of tanks used in ore separation range from 3 to 20 ft.

Feeding. In items *A* and *B* (Fig. 76) initial submergence to a considerable depth is obtained by causing the incoming stream of feed to plunge from the head pulleys *a* of belt conveyors. Such submergence is desirable to prevent rafting by a mass of crowded float, and to insure that middling shall be below the float so that it will be pressed down by it. In *C* submergence is effected by star feeder *b*, which is rotated in such a direction at such a speed as to insure the desired penetration. In *D* the feed is introduced relatively quietly, subsurface, through pipe *c;* this method has the advantage that loose water carried with the incoming material is floated on the column of suspension standing in *c* and may be drawn off without entering the cone proper and diluting the suspension therein. Subsurface feed chutes at BUTLER BROS. had to be widened at the bottom to prevent arching and clogging. Feed should be wetted initially to prevent adhesion of particles into clots or islands in which there is no freedom of movement and from which, therefore, sink and float particles do not readily disengage. Such wetting, however, usually exists already as a result of preliminary washing to remove fines.

The pointed shape of the separating vessel, together with a rising-medium current, tends to produce a teeter column of ore particles, the volumetric and gravimetric densities of which both increase downward; new feed entering this mass displaces some of its components and is itself displaced; the increase in top density of the mass caused by the heavy components in the new feed produces upward displacement of light material, and the initial momentum of the incoming particles serves to overcome some of the tendency of the heavier constituents to rise.

Removal of sink is the most difficult part of separator design. The aim is discharge of the relatively large particles of sink without at the same time removing sufficient of the immersing medium to cause disturbing downward currents in the tank. The method employed with suspensoid media is discharge into a separate chamber or pipe which has permanent open under-water connection with the separating tank, has walls not lower than the lip of the tank, and is provided with some sort of elevating device, *e.g.*, mechanical or air-lift.

In item *A* (Fig. 76) sink is lifted through central air-lift *d*, air being introduced through the bottom of the cone. In item *B* the air lift *e* is outside the cone in order to accommodate the central hollow perforated shaft *f*, which serves both to distribute medium throughout the depth of the cone and also to carry the stirring frame *g*. A similar arrangement is used in item *D*. In item *C*, sink is discharged by the perforated buckets on the elevator line in the housing *h*. The air lift is not suitable for very coarse sink, but is the simplest from a structural standpoint, and its operation is cheap and easily controlled—it is, therefore, the one most used in ore separation. Air consumption at MASCOT is 100 cu. ft. per min. per cone. Rate of sink discharge is controlled either by control of the speed of the discharge mechanism or by variation in cross-section of the sink outlet, as by a diaphragm valve. Clean-out gates should be provided at the bottom of air lifts, if possible, although R. Ammon (*PC*) reports that a conveyor idler was discharged up the air lift at EAGLE PICHER. The elevator discharges less medium than the air lift.

An intermittent lock is used for discharge of coarse slate in coal separation.

Float is discharged in items *A*, *B*, and *D* by overflow of medium; in item *C* it is moved across the tank and scraped off by the four-armed rotary scrapers *i*, which may be operated at controlled speeds. In *C*, level of medium is maintained by an adjustable weir on box *j*, which affords auxiliary control of float discharge. The path of float from the critical separating level to the overflow lip should be as long as possible in order to afford time for winnowing out middling. With subsurface feeding and rotary agitation this path is an expanding spiral which, in addition to its length, produces constantly increasing spacing of the particles, with consequent increasing freedom of motion.

Capacity depends upon the specific gravities of the sink and float materials, the size of feed, and the closeness of cut required; at BUTLER BROS., treating iron ore at 1 1/2~3/8-in., with a relatively large leeway as to tailing (float) grade, a 4-ft. cone treated 40 long t.p.h.; a 6 1/2-ft. cone 110 long t.p.h.; and a 7 1/2-ft., 175 t.p.h., the rate per sq. ft. of cross-section for the latter cone being 8 long t.p.h.; in anthracite-coal practice (CHANCE PROCESS), again with considerable laxity as to tailing requirements, treating 4 1/4~1/2-in. feed, the usual capacity rating is 1 to 1.3 t.p.h. per sq. ft. of medium surface; at MASCOT and at EAGLE PICHER the duties of the cones on 1 1/2~3/8-in. and 1 1/4~1/4-in. feeds respectively are 2.7 and 1.3 t.p.h. per sq. ft. of medium surface. Capacity reduction with small feeds is more than proportionate to the reduction in minimum size of particle, and capacity also decreases with a given kind of feed as the proportion of sink increases.

Agitation is effected either by stirrers mounted on a vertical shaft, or by up-feeding of new and circulating medium (or water), or by both means acting in conjunction. The degree of mechanical agitation is small in the ore-separating cones, the stirring arms serving almost as much to prevent crowding and to move sink down the cone sides as to stir medium, but in the Chance cones using relatively coarse granular medium, the tip speed of the longest arms may be 300 f.p.m. At MASCOT stirring blades comprise essentially 4 vertical paddles cut out so that only a 3- or 4-in. rim remains; this is run at 5 r.p.m. About 150 f.p.m. peripheral speed is recommended as maximum in ore separators.

Feed point of up-fed medium is normally well below the zone of critical density, to permit merging of the multiple inflowing streams into a general rising current before this important level is reached. In differential-density operation the feeding of several streams of different densities at several different levels, either through annular pipes around the shaft or through pipes piercing the cone wall, has been proposed, but not reported in practice.

Rising rate of medium should be between that of the falling rates of coarse medium-solid and fine ore middling. Middling (as regards medium density) may be caused to rise or sink as desired by control of the rate of rising current.

Level of medium in the separator is maintained by an automatic control of medium-circulation rate actuated from a float in the separating tank.

Apparatus for multiple separation is described by Wuensch (*US Pat. 2 135 957*). It comprises a troughlike tank with sloping bottom, fed at the deep end. A jigging mechanism situated below the feed point receives the rapid sink and stratifies it. A screw conveyor transports the upper stratum of the jig bed together with delayed sink up the sloping bottom of the separating tank and in working it over effects further stratification. An outlet trap underneath the spiral skims off a lower stratum while

the upper layer is carried on to a second trap in and above which medium density is lowered by controlled injection of water. A second middling sinks and is removed here and residue is mechanically carried on to join the float.

Cleaning of medium and maintenance thereof at the proper density and consistency are the most fussy and expensive parts of heavy-medium sink-float operation. Essentially, the steps in order are: (1) Drainage of the cone products separately on screens of such aperture that the medium solid in suspension in water, together with any correspondingly small solid particles abraded from the ore, passes through, while the cone product with adhering medium remains as oversize. (2) Washing of the cone product by water sprays on a screen whereby adhering medium-solid is washed through the meshes. Wuensch (*US Pat. 2 151 175/1939*) recommends countercurrent washing in which drained medium is

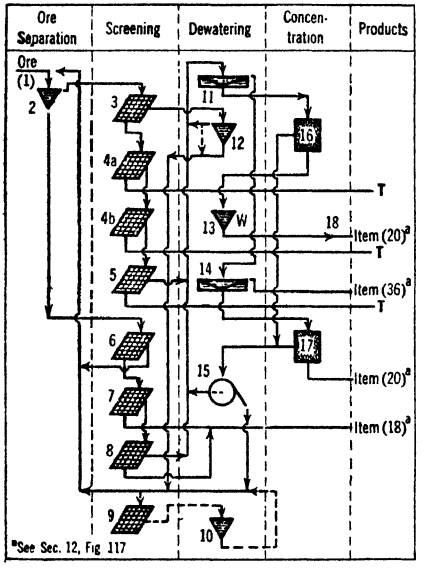

Legend for Fig. 77.

1. Ore is sized down to 1/4- to 8/16-in. minimum and washed free of slime.
2. 2 @ 9-ft. Wuensch separating cones. Medium is a suspension of galena flotation concentrate in water, sp. gr. about 2.70 to 2.74.
3. 6 draining screens in parallel, 3 to each cone.
4. 2 @ 2-deck vibrating screens, *a* = upper deck, 1-in. aperture; *b* = lower deck, 1/4-in. aperture. The purpose of these screens, in addition to washing, is to size tailing for the crushed-stone market.
5. Trommel, 2 1/2-mm. aperture.
6. 2 draining screens, one for each cone.
7. Vibrating screen, 1/4-in. aperture.
8. As (5).
9. Leahy screen, to effect disintegration of any lumpy medium solid.
10. Storage tank, no overflow. Circulation is maintained through (9) and (10) with medium drawn off as necessary to keep up volume and density in (2).
11. 1 @ 20-ft. Dorr thickener.
12. Dewatering cone used to thicken drained medium, if this is necessary; when unnecessary, overflow, if any, joins spigot product in return to the medium-circulating circuit.
13. Dewatering cone; overflow wasted; spigot returns to main mill flow.
14. 1 @ 80-ft. Dorr thickener; removes colloids from medium circuit.
15. Filter.
16. Battery of Denver sub-A flotation cells.
17. 3 Butchart pneumatic cells in parallel.
18. Pilot table.

FIG. 77. Recovery system for galena medium at Eagle Picher.

first washed with desanded slimy water originating from a fresh-water final wash. This process may have more than two stages, with desanding of the washings between successive advances. (3) Cleaning products from (1) and (2), by whatever means are applicable. Flotation is used at EAGLE PICHER (Fig. 77); magnetic separation at BUTLER BROS. (Fig. 78); at MASCOT, granular medium-solid is separated from granular gangue by tabling, and slime gangue and colloidal galena are separated from fine galena by sedimentation. At coal plants using sand, mechanical classification is sufficient to make sand-slime separation and coal is readily removed from the sand product by froth flotation or table flotation (Sec. 12, Art. 30). (4) Reclaimed medium-solid is returned to the medium-thickening and circulating system, to which is also added the requisite amount of new medium-solid and water to maintain the desired density. Spiral classifiers replace thickeners for ferrosilicon on account of the rapid settling of this medium, especially when magnetically clotted. With cheap medium-solid, regulated bleed off of thickener feed may be sufficient to maintain medium gravity and may be cheaper than concentration. Control of *p*H and the use of selective dispersants are useful in thickening both in order to give better control of the consistency of the underflow and to effect some further removal of gangue in overflow. Automatic devices for regulation of thickener underflow and classifier overflow are desirable and economical. Control of density to a range of 0.02 in sp. gr. for a day's run is reported (*PC*). The cleaner the medium, the more efficient the operation.

Of the relatively large amount of medium overflowed in differential-density operation only about 5 to 10% is diluted and requires reconditioning.

Loss of fine medium amounts, in general, to considerably less than 1 lb. per ton of cone feed. MASCOT reports 0.3 lb. of galena; EAGLE PICHER sends 2 lb. of galena flotation concentrate to the 2-stage cone treatment (Sec. 2, Fig. 117) per ton of original cone feed, but returns washings to the main plant, so that net consumption, although unknown, is known to be much less than this. Ferrosilicon consumption is reported to be 0.9 lb. per ton of cone feed at the HARRISON plant and 0.35 lb. at the MERRITT plant of BUTLER BROS., treating iron ore, and 0.7 to 0.85 lb. at BARTON MINES, floating garnet. The SINK AND FLOAT CORP. claims galena consumption as low as 0.1 lb. per ton of cone feed (*Tref 10/42*). The price of medium solid, conditioned for use as medium, will normally be double or more than double the market price for the crude material. The cost (1940) of galena lost at MASCOT was 6¢ per ton of mill feed and of ferrosilicon at BUTLER BROS. 3¢ per ton of feed to the heavy-medium separator.

The difficulty involved in washing medium from concentrate is decreased by not bringing medium into contact with dry feed; on the other hand, washed feed should be drained as thoroughly as possible before introduction to the separator in order to prevent undue lowering of top gravity by dilution.

Legend for Fig. 78.

1. Crushed, sized to 1 5/8~3/8-in., washed.
2. Cone separator.
3. 4×20-ft. Symons shaking screen; first 4 ft. (3*a*) has 2-mm. rd.-hole plate; balance (3*b*) has 3-mm. round-hole plate and a washing spray.
4. Centrifugal pump.
5. Centrifugal pump.
6. Magnetizing blocks, Alnico. Cause flocculation of ferrosilicon.
7. 1 @ 15-ft. thickener.
8. 1 @ 50-ft. thickener.
9. 1 @ 36-in. Crockett magnetic separator.
10. 1 @ 24-in. Crockett magnetic separator.
11. To fine-ore treatment plant.
12. 1 @ 36-in. Akins classifier.
13. Demagnetizing coil.
14. 1 @ 4×6-ft. Symons shaking screen, 3-mm. rd. hole.
15. 1 @ 5×16-ft. Symons shaking screen, 3-mm. rd. hole, with wash spray.

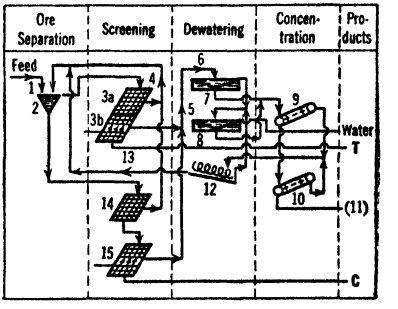

FIG. 78. Recovery system for ferrosilicon medium at Butler Bros.

Both desiderata are served in differential-density operations by wetting down incoming feed with low gravity return medium in a feed trough.

Capacity of the medium-reconditioning plant is relatively small; at MASCOT it is about 2.5% of the capacity of the cone plant, while at EAGLE PICHER about 50 tons of galena per day is withdrawn for reconditioning from a medium circulation of 1,500 g.p.m., the total galena in the medium stock being 350 tons.

Control. Wuensch (*US. Pat. 2 151 175/1939*) summarizes operating difficulties and remedies therefor as follows: DIFFICULTIES are (1) contamination of medium with ore fines and with oil, the first resulting in lowered medium gravity and probable increase in apparent viscosity, and the second in frothing and loss of medium in overflow in the reconditioning circuit; (2) settlement of medium particles, which produces crowding. REMEDIES are (1) to wash incoming feed thoroughly to remove both sand and slime from feed; (2) reduce oil drip preceding and in the sink-float plant; (3) remove contaminating substances in reconditioning. Wuensch further gives certain RULES FOR OPERATION: (1) Feed should be moist (dry feed clots; wet feed dilutes medium). (2) Introduce conditioned feed together with more or less medium at top of separator near center with enough momentum to carry it well below the surface. (3) Withdraw products continuously, otherwise crowding and rafting will occur. (4) Recondition circulating medium to remove sand, slime, and froth-producing contaminants (much of the medium should be recovered by drainage and recirculated directly in order to reduce the amount requiring thickening. The volume to be thickened may be further reduced by countercurrent washing). (5) Bleed off part of thickener overflow to keep down the amount of gangue colloids. (6) Place froth traps on thickener overflow to remove oil. (7) Supply new water as required to make up loss on moist products and in bleed. (8) Maintain medium density uniform or uniformly variable throughout the separator. (9) Keep viscosity as low as possible and yet maintain the medium without excessive agitation.

Fine feeds require a medium of relatively high fluidity and must be treated in the trough-type rather than the cone separator.

Feeding. The rate of feed should be constant and the grade of feed should be held as constant as possible. If feed containing a much larger percentage of sink than normal is fed to a cone, the sink displaces medium to the overflow, rising rate is increased, tending to throw middling into the tailing and, with sand media, the increase in rising velocity of the water carries sand out of the separating tank, which decreases medium density unless immediately compensated.

Table 93. Performances of suspensoid sink-float process on ores

Items	Mascot		Eagle Picher			Butler Bros.					
						Harrison plant			Merritt plant		
	i	*j*	*i, k*	*j, k*	*j, n*	*i*	*j*	*j*			
Ore	Sphalerite-dolomite		Sphalerite and galena in limestone and chert			Hematite and jasper *p*	Hematite and jasper *p*	Hematite and jasper *r*	Hematite and jasper *t*	Manganese ore	Manganiferous ore
Medium:											
Kind of solid	Galena *a*			Galena *b*			Ferrosilicon *c*			Ferrosilicon *c*	
Density: Top of cone	2.80	2.84	2.70	.....	.....	2.90 to 3.05 av.	3.10 av.	3.10 av.	2.75	3.05	3.10
Bottom of cone	2.95	3.05	2.74	.....	.....						
Weights, per ton of mill feed, lb.:											
New medium-solid added	1.87	0.52	2.0	2.0 *m*	2.0 *m*	.....	.....	.....	.....	.....	.....
Medium-solid recovered	0.94	0.23	.....	.....	.....	.....	.....	.....	.....	.....	.....
Medium-solid lost	0.93	0.29	*e*	*e*	*e*	1.08	0.9 *o, v*	0.9 *o, v*	0.35 *o, v*	0.35 *o, v*	0.35 *o, v*
Cone:											
Diameter, ft.	9	9	9	19	10	7 1/2	7 1/2	7 1/2	7 1/2	7 1/2	7 1/2
Tons feed per hr.	150	.....	200	200 *l*	108	200	160 to 200	160 to 200	135	135	135
Size of feed, in.	1 1/2~3/8	2~3/8	1 1/2~3/16	1 1/2~3/16	3/16-in.~7-n.	1 1/4~1/4	1 5/8~3/8	1 5/8~3/8	1 1/4~3/8	1 1/4~3/8	1 1/4~3/8
Feed: Assay	2.5% Zn	2.7% Zn	3.5% Zn, 0.4% Pb	3.9% Zn, 0.54% Pb	8.78% Zn	53.97% Fe, 15% SiO_2	54.04% Fe, 17.53% SiO_2	48.30% Fe, 22.77% SiO_2	47.11% Fe, 22.61% SiO_2, 1.38% Mn	30.43% Fe, 25.81% SiO_2, 14.76% Mn	31.29% Fe, 18.28% SiO_2, 18.31% Mn
Per cent. of mill feed	71.8	68.1	73.3	75.9	20.2	.....	.....	.....	.....	.....	.....
Concentrate: Assay	15.23% Zn	12.89	14.90% Zn, 1.7% Pb	14.2% Zn, 2.49% Pb	18% Zn	58.38% Fe, 8.8% SiO_2	59.24% Fe, 9.61% SiO_2	55.94% Fe, 11.52% SiO_2	52.44% Fe, 12.00% SiO_2, 2.19% Mn	31.25% Fe, 17.96% SiO_2, 18.71% Mn	30.94% Fe, 11.91% SiO_2, 22.52% Mn
Per cent. of mill feed	10.2	13.1	14.2	14.7	8.9	.....	.....	.....	.....	.....	.....
Per cent. of cone feed	14.2	19.4	19.4	19.4	44.1	72.7	76.4	61.0	.....	.....	.....
Tailing: Assay	0.34% Zn	0.29% Zn	0.75% Zn, 0.036% Pb	0.42% Zn, 0.08% Pb	1.51% Zn	42.28% Fe, 31.6% SiO_2	37.17% Fe, 43.23% SiO_2	36.36% Fe, 40.36% SiO_2	.....	.....	.....
Per cent. of mill feed	61.6	55.0	59.1	61.2	11.3	.....	.....	.....	.....	.....	.....
Recovery, based on cone feed	88.2%	91.4	82.1% Zn, 92.8% Pb	89.0% Zn, 88.2% Pb	90.4	75.4%	84.0% *q*	69.5 *s*	32.7 *u*	52.0 *u*	51.9 *u*
Costs (1938-39), cents per ton of mill feed:											
Year	1938-39	1942	1938-39	1942	1942	1938-39	1942	1942	1942	1942	1942
Length of period covered, mo.	1	1	Av. 2 yr.	.....	.....	Season	.....	.....	.....	.....	.....
Labor	1.25	.....	0.7	.....	.....	0.84	.....	.....	.....	.....	.....
Power	0.8 *d*	.....	0.8 *f*	.....	.....	1.02 *g*	.....	.....	.....	.....	.....
Medium lost	3.0	.....	.....	.....	.....	2.89	.....	.....	.....	.....	.....
Repairs	1.0	.....	1.9	.....	.....	1.34	.....	.....	.....	.....	.....
Miscellaneous *h*	2.0	.....	1.2	.....	.....	0.34	.....	.....	.....	.....	.....
Total	8.05	.....	4.6	8 incl. royalty		6.43	.....	.....	.....	.....	.....

Notes on page 119.

a Jig concentrate ground in a small ball mill to pass a 2-mm. screen.

b Flotation concentrate made in mill. Reported at A.I.M.E., Feb., 1943 meeting, as changing to ferrosilicon on account of the difficulty in cleaning galena.

c <65-m.; 83% Fe, 14 to 15% Si and 0.5% C best from standpoint of high resistance to oxidation coupled with satisfactory magnetic susceptibility.

d Based on a price of 8 mills per kw-hr.

e All reject products of medium-cleaning system are sent to the main flotation plant (Sec. 2, Fig. 117), hence the only loss is that abraded into galena slime too fine for recovery (see Sec. 12, Art. 35). Loss reported at Feb. 1943 meeting of A.I.M.E. was 0.8 lb. per ton of raw feed for the two cones.

f Based on a price of 9 mills per kw-hr.

g Based on a price of 1.5¢ per kw-hr.

h Does not include royalty, depreciation, and overhead.

i MBI Bulletin.

j *Ore dressing notes No. 11*, American Cyanamid Co., July 1942.

k Primary cone.

l To each of two in parallel.

m Total for primary and secondary cones.

n Secondary cone taking recrushed primary-cone sink combined with <3/16-in. mill feed, all screened on 7-m.

o Per ton of cone feed.

p Crude ore.

q Ratio of concentration, 1.31 : 1.

r Jig tailing.

s Ratio of concentration, 1.64 : 1.

t Lean ore.

u $\frac{\text{Weight cone concentrate}}{\text{Weight cone feed}}$

v At Feb. 1943 meeting of A.I.M.E., a paper by Holt gave losses of ferrosilicon per ton of cone feed as 0.6 to 0.9 lb. per long ton on dense Mesabi ores, 0.73 lb. on manganiferous ores, and 0.9 to 1.2 lb. on porous iron ores.

Density of medium should range from somewhat below that of the heaviest float desired to slightly above that figure, according to the extent to which rising currents contribute to overflow. In general the gravities used in Chance operations for bituminous coal separation are from 1.30 to 1.45 and for anthracite from 1.50 to 1.60; limestone gangue at MASCOT is floated at 2.80 top gravity, chert at EAGLE PICHER at 2.84, and ferruginous chert at BUTLER BROS. at 2.90 to 3.05. Holt (*PC*) reports that with ferrosilicon medium the density can be held constant hour after hour; density change can be made in about 15 min., the bulk of circulating medium being kept as low as possible (45 tons medium-solid for 350 t.p.h.) to facilitate such change.

Variation in medium density from top to bottom of the separating tank occurs, even in the most stable workable suspensoid media. The extent of variation is partially controllable by the size and size distribution of the medium-solid, and, in operation, by the relative ratio at which medium is withdrawn at the top and bottom of the separating tank. At MASCOT sp. gr. of galena medium is maintained 2.84 at top and 3.05 at bottom; at BARTON MINES (separating garnet, sp. gr. 3.9 to 4.1, from hornblende, sp. gr. 3.0 to 3.4) top sp. gr. of ferrosilicon medium is 3.17, bottom 3.22. See also Table 93.

Circulation of medium by reason of withdrawals is at such a rate that tank content is replaced on the average once in 20 to 40 min.

Performances at several plants, as reported by Minerals Beneficiation, Inc., proprietor of patent rights in the heavy-suspensoid process, and by American Cyanamid Co., sales representative, are given in Table 93. Similar results have been published in the technical press by men from the plants (*141 #7 J 35*; *26 #9 MCJ 25*; *141 #9 J 33*; *153 A 429*).

The Sink & Float Corp. (*Tref 10/42*) reports that an 8×9-ft. Huntington-Heberlein tank at BUNKER HILL & SULLIVAN treats 70 to 83 t.p.h. of 1 1/4~1/8-in. feed comprising about 70% of run-of-mine, assaying 6.3% Pb and 3.5% Zn. Float is about 50% of tank feed and assays 0.42% Pb and 0.62% Zn. Sink, assaying 12.4% Pb and 6.5% Zn contains 96.6% of the lead and 90.9% of the Zn in separator feed. Power consumption is about 1 hp-hr. per ton of mine ore. At BARTON MINES (*A TP 1578*) 1 1/4~3/16-in. garnet is separated from hornblende with ferrosilicon medium (all <300-m., 60% 800~1500-m., 30 to 40% <1500-m., at a sp. gr. which ranges from 3.10 to 3.25. Drained medium from sink returned to top of cone, that from float to bottom, in order to maintain top and bottom densities as nearly alike as possible. Cone feed is 60 to 70% of mill feed and cone tailing about 50 to 60% of mill tailing. Tailing >1/2-in. shows maximum garnet analysis of 0.3%; <1/2-in. tailing averages 3% and has run as high as 5% on difficult ore; total cone tailing averages 1.65% on normal ore. Loss of ferrosilicon is 0.70 to 0.85 lb. per ton of cone feed. Table 94 gives results of tests on a variety of ores made in the pilot plant of American Cyanamid Co.

Attendance is 2 men per plant at the metalliferous mills, more or less irrespective of tonnage, one on the cones and one on the medium circuit; or 3 men to a 2-cone plant. At BARTON MINES (*A TP 1578*), however, one man handles both cone and medium plants.

Water consumption is practically only that carried away on the washed coarsely granular tailing. This could, if necessary, probably be held to less than 5% on the separator feed.

Cost of treatment will probably fall between 6 and 20¢ (1939 prices) per ton of cone feed (exclusive of royalty), depending on the tonnage over which labor can be spread, and the cost of medium. The bulk of this cost is for medium recovery and for medium lost; power should not exceed 1 to 1.5¢ per ton.

Table 94. Sink-float tests in 20-in. cone by American Cyanamid Co.

	Copper-tungsten, Washington				Fluorspar, Rosiclare													
Principal minerals *a*	Cp, Ma, Bo, Ap, Py, Sh, Qz, Ca				Fl, Ca, Qz, Ga, Sp, Cp, Li				Fl, Ca, Qz, Ga, Sp, Cp, Li				Fl, Ca, Qz, Ga, Sp, Cp, Li				Fl, Ca, Qz, Ga, Sp, Cp, Li			
Analyses made for	Cu	WO_3	Au	Ag	CaF_2	$CaCO_3$	SiO_2		CaF_2	$CaCO_3$	SiO_2		CaF_2	$CaCO_3$	SiO_2		CaF_2	$CaCO_3$	SiO_2	Pb	Zn
Feed, total: assays, % or oz. per ton	1.68	1.12	0.005	0.92	56.44	23.60	10.80		59.94	21.62	10.83		58.69	24.32	11.13		60.32	22.28	15.20	0.14	0.20
Cone feed: Size	1-in.∼10-m.				1-in.∼10-m.				1-in.∼10-m.				1-in.∼10-m.				3/4-in.∼10-m.				
Weight, % of total feed	70.3				64.47				67.33				67.33				100				
Assays	1.81	0.35	0.003	0.85	54.78	27.64	13.35		56.42	23.51	13.13		54.59	27.52	13.57		60.32	22.28	15.20	0.14	0.20
% of total feed values	75.5	21.7	44.2	65.4	57.65	73.03	80.12		63.40	73.20	81.62		62.62	76.17	82.12		100				
Ferrosilicon medium: Size	<65-m., 50% <325-m.				<65-m., 53% <325-m.				<65-m., 53% <325-m.				<65-m., 53% <325-m.				<65-m., 50% <325-m.				
Sp. gr.	2.80				2.88				2.95				3.00				2.88				
Sink: % of cone feed	10.91				54.43				53.19				45.20				59.41				
% of total feed	7.67				35.09				35.81				30.43				59.41				
Assays	14.77	2.94	0.030	6.96	90.78	0.98	4.39		92.16	0.81	4.94		92.43	0.77	3.72		92.18	1.04	5.29	0.22	0.22
Recovery: On cone feed	88.3	94.7	100.0	84.2	90.2	1.93	17.9		86.9	1.84	20.0		75.5	1.26	12.4		90.8	2.8	20.7	97.0	65.2
On total feed	66.8	20.1	43.6	56.1	52.0	1.41	14.3		55.1	1.35	16.3		47.9	0.96	10.2		90.8	2.8	20.7	97.0	65.2
Float: % of cone feed	89.09				45.57				46.81				54.80				40.51				
% of total feed	62.62				29.38				31.52				36.90				40.51				
Assays	0.24	0.02	nil	0.16	11.77	59.48	24.05		15.81	49.29	22.43		23.38	49.58	21.69		13.68	53.36	29.71	0.10	0.17
Fines: % of total feed	29.7				32.67				32.67				32.67				0.0				
Assays	1.39	2.97	0.010	1.07	67.15	17.74	6.09		67.15	17.74	6.09		67.15	17.74	6.09						
Summary	*f*												*g*								

	Fluorspar, Rosiclare jig tailing												Magnesite, Nevada								
Principal minerals *a*	Fl, Ca, Qz				Fl, Ca, Qz				Fl, Ca, Qz				Fl, Ca, Qz				Mg, Do, Rk				Mg, Do, Rk				Mg, Do, Rk			
Analyses made for	CaF_2	$CaCO_3$	SiO_2		CaF_2	$CaCO_3$	SiO_2		CaF_2	$CaCO_3$	SiO_2		CaF_2	$CaCO_3$	SiO_2		CaO	SiO_2			CaO	SiO_2			CaO	SiO_2		
Feed, total: assays, % or oz. per ton	21.8	32.9	41.6		21.8	32.9	41.6		21.8	32.9	41.6		22.4	30.9	42.2		8.4	3.1			8.4	3.1			8.4	3.1		
Cone feed: Size	1/2∼1/4-in.				1/4-in.∼10-m.				Calc. composite > 10-m.				>10-m.				1-in.∼10-m.				1-in.∼10-m.				1-in.∼10-m.			
Weight, % of total feed	40.5				46.0				86.5				86.5				72.5				72.5				72.5			
Assays	15.7	33.2	47.7		24.5	33.7	38.0		20.4	33.5	42.6		21.0	31.2	43.5		8.1	1.6			8.1	1.6			8.1	1.6		
% of total feed values	29.1	41.0	46.5		51.8	47.1	42.0		80.9	88.0	88.4		81.4	87.8	88.7		69.5	36.8			69.5	36.8			69.5	36.8		
Ferrosilicon medium: Size	<65-m., 61% <325-m.				<65-m., 61% <325-m.				<65-m., 61% <325-m.				<65-m., 61% <325-m.				<65-m., 53% <325-m.											
Sp. gr.	2.90				2.90				2.90				2.90				2.92				2.94				2.97			
Sink: % of cone feed	6.8				19.3				13.5				14.3				50.4				28.8				7.1			
% of total feed	2.8				8.9				11.7				12.3				36.5				20.9				5.1			
Assays	90.2	1.5	8.3		91.7	1.6	6.7		91.3	1.6	7.1		88.6	1.1	7.8		3.4	0.7			3.0	0.7			2.9	0.8		
Recovery: On cone feed	39.4	0.3	1.2		72.2	0.9	3.4		60.4	0.6	2.2		60.1	0.5	2.6		21.2	23.9			10.6	12.8			2.6	3.6		
On total feed	11.5	0.1	0.6		37.4	0.4	1.4		48.8	0.6	2.0		48.9	0.4	2.3		14.8	8.8			7.4	4.7			1.8	1.3		
Float: % of cone feed	93.2				80.7				86.5				85.7				49.6				71.2				92.9			
% of total feed	37.8				37.1				74.9				74.2				36.0				51.6				67.4			
Assays	10.2	35.6	50.6		8.5	41.4	45.5		9.3	38.5	47.8		9.8	36.2	49.4		12.8	2.4			10.1	1.9			8.4	1.6		
Fines: % of total feed										13.5				13.5			27.5				27.5				27.5			
Assays									30.9	29.2	35.7		30.9	29.2	35.7		9.3	7.0			9.3	7.0			9.3	7.0		
Summary									*h*								*i*											

Notes on page 123.

Table 94. Sink-float tests in 20-in. cone by American Cyanamid Co.—*Continued*

	Magnesite, Nevada						Washington Magnesite											
							Sample 1			Sample 2			Sample 3			Sample 4		
Principal minerals *a*	Mg, Do, Ry		Mg, Do, Ry		Mg, Do, Ry		Mg, Do, Ca, Tl, Sr, Qz, Sl			Mg, Do, Ca, Tl, Sr, Qz, Sl			Mg, Do, Ca, Tl, Sr, Qz, Sl			Mg, Do, Ca, Tl, Sr, Qz, Sl		
Analyses made for	CaO	SiO_2	CaO	SiO_2	CaO	SiO_2	CaO	Ins.	SiO_2	CaO	Ins.	SiO_2	CaO	Ins.	SiO_2	CaO	Ins.	SiO_2
Feed, total: assays, % or oz. per ton	9.9	11.3	9.9	11.3	9.9	11.3	5.8	7.3	.....	5.0	6.9	.....	5.9	3.3	.....	2.7	7.5	.....
Cone feed: Size	1~1/4-in.		1/4-in.~10-m.		1-in.~10-m. *e*			1~1/4			1~1/4			1~1/4			1~1/4	
Weight, % of total feed	52.2		21.4		73.6			62.9			70.1			65.8			75.1	
Assays	10.0	10.7	10.5	13.4	10.1	11.5	6.6	6.8	5.6	5.2	6.7	.....	6.0	3.1	.....	2.4	6.2	.....
% of total feed values	.....	.....	.....	.....	75.0	74.7	70.7	59.2	.....	73.0	67.7	.....	67.3	60.6	.....	66.7	62.0	.....
Ferrosilicon medium: Size																		
Sp. gr.	2.95		2.95		2.95			2.90			2.95			2.95			2.91	
Sink: % of cone feed	41.0		28.2		37.3			58.0			53.3			42.8			83.1	
% of total feed	21.4		6.0		27.4			36.5			37.4			28.2			62.4	
Assays	2.2	1.1	4.0	1.8	2.6	1.3	2.9	4.7	3.6	1.6	3.3	2.0	1.6	2.1	1.6	1.3	6.4	2.3
Recovery: On cone feed	8.9	4.2	10.7	3.7	9.5	4.1	25.9	39.9	36.5	16.9	26.4	.....	11.3	28.8	.....	44.8	85.5	.....
On total feed	4.7	2.1	2.4	1.0	7.1	3.1	18.3	23.6	.....	12.3	17.9	.....	7.6	17.6	.....	29.9	53.0	.....
Float: % of cone feed	59.0		71.8		62.7			42.0			46.7			57.2			16.9	
% of total feed	30.8		15.4		46.2			26.4			32.7			37.7			12.7	
Assays	15.4	17.4	13.1	18.0	14.6	17.6	11.6	9.8	8.4	9.2	10.5	.....	9.3	3.8	.....	7.8	5.3	.....
Fines: % of total feed	.....	.....	.....	.....	26.4			37.1			29.8			34.2			24.9	
Assays	.....	.....	.....	.....	9.4	10.9	4.6	8.0	.....	4.5	7.5	.....	5.6	3.8	.....	3.6	11.4	.....
Summary			*j*									*k*						

	Washington Magnesite												Manganese Arizona				
	Sample 5			Sample 6			Sample 7			Sample 8							
Principal minerals *a*	Mg, Do, Ca, Tl, Sr, Qz, Sl			Mg, Do, Ca, Tl, Sr, Qz, Sl			Mg, Do, Ca, Tl, Sr, Qz, Sl			Mg, Do, Ca, Tl, Sr, Qz, Sl			MnO, Ca, Sig				
Analyses made for	CaO	Ins.	SiO_2	CaO	Ins.	SiO_2	CaO	Ins.	SiO_2	CaO	Ins.	SiO_2	Mn	Fe	CaO	Ins.	
Feed, total: assays, % or os. per ton	3.1	5.2	.....	2.8	9.7	.....	7.2	4.3	.....	3.2	4.4	.....	20.3	3.5	16.6	21.6	
Cone feed: Size		1~1/4			1~1/4			1~1/4			1~1/4			1-in.~10-m.			
Weight, % of total feed		66.8			69.7			72.2			58.0			72.4			
Assays	3.0	5.0	.....	3.1	9.8	.....	7.6	3.8	.....	3.5	3.7	.....	21.0	3.4	17.9	18.5	
% of total feed values	65.2	64.1	.....	79.3	70.0	.....	76.6	64.2	.....	62.4	49.4	.....	74.8	69.5	78.2	63.8	
Ferrosilicon medium: Size														<65-m., 50%	<325-m.		
Sp. gr.		2.92			2.93			2.95			2.95			2.80			
Sink: % of cone feed		72.0			65.8			62.7			69.7			51.4			
% of total feed		48.1			45.8			45.2			40.4			37.2			
Assays	2.0	4.8	2.8	2.1	7.6	2.1	2.0	3.3	1.8	1.1	3.2	2.0	32.6	3.3	13.5	7.6	
Recovery: On cone feed	46.9	69.4	.....	44.4	51.3	.....	16.4	53.5	.....	22.4	59.5	.....	80.0	50.4	38.9	20.6	
On total feed	30.6	44.5	.....	35.2	35.9	.....	12.6	34.4	.....	14.0	29.4	.....	59.8	35.0	30.3	13.2	
Float: % of cone feed		28.0			34.2			37.3			30.3			48.6			
% of total feed		18.7			23.8			26.9			17.6			35.2			
Assays	5.7	5.5	.....	5.1	13.9	.....	17.0	4.8	.....	8.9	5.0	.....	8.6	3.4	22.5	31.0	
Fines: % of total feed		33.2			30.3			27.8			42.0			27.6			
Assays	3.2	5.6	.....	1.9	9.6	.....	6.0	5.5	.....	2.9	5.3	.....	18.6	3.9	13.2	28.3	
Summary						*k*								Sink after calcining			
													38.8	3.9	16.1	9.1	

Notes on page 123.

Table 94. Sink-float tests in 20-in. cone by American Cyanamid Co.—*Continued*

	Manganese, Eastern Tennessee						Lead-zinc dump			Siderite-iron			
Principal minerals *a*	MnO, Lm, Ch, Qt, Cl						Sp, Ga, Py, St, Gr			Sd, Qt			
Analyses made for	Mn	Fe	Ins.	Mn	Fe	Ins.	Pb	Zn	Ag	Fe	SiO_2	Ins.	S
Feed, total: assays, % or os. per ton	29.2	10.2	27.2	26.6	10.2	31.6	1.87	5.34	2.68	24.0	32.1	33.4	0.68
Cone feed: Size		1-in.~10-m.			1-in.~10-m.			1-in.~10-m.			2~1-in.		
Weight, % of total feed		82.5			82.5			52.8			72.4		
Assays	30.8	9.6	25.2	27.6	9.7	30.6	1.55	5.10	2.89	23.9	32.1	33.2	0.62
% of total feed values	87.0	78.1	76.5	85.8	78.2	79.8	43.8	50.4	56.9	72.3	72.4	72.2	66.2
Ferrosilicon medium: Size		<65-m., 50% <325-m.			do.			<65-m., 53% <325-m.			<65-m., 60% <325-m.		
Sp. gr.		2.90 *b*			3.00 *c*			2.90			2.96		
Sink: % of cone feed		67.2			49.2			32.9			66.2		
% of total feed		55.5			40.6			17.4			48.0		
Assays	40.5	9.6	8.5	41.9	8.3	8.2	4.67	13.87	8.18	33.6	7.9	9.0	0.87
Recovery: On cone feed	88.4	66.9	22.6	74.8	42.2	13.1	99.2	89.5	93.3	93.0	16.3	17.9	93.4
On total feed	76.9	52.2	17.3	64.1	33.0	10.5	43.4	45.1	53.1	67.2	11.8	13.0	61.8
Float: % of cone feed		32.8			50.8			67.1			33.8		
% of total feed		27.0			41.9			35.4			24.5		
Assays	10.9	9.7	59.6	13.7	11.0	52.3	0.02	0.80	0.29	5.0	79.6	80.7	0.11
Fines: % of total feed		17.5			17.5			47.2					
Assays	21.7	12.8	36.5	21.7	12.8	36.5	2.23	5.62	2.45				
							Combined sink and <10-m.						
							2.89	7.84	3.99				
Summary	*m*						*n*			Total float >10-m. 36.8% @ 7.6 Total sink, 63.2% @ 33.7 *o*			

	Siderite-iron				Topas finely dispersed		Tin-tungsten dump							
Principal minerals *a*	Sd, Qt				To, S_3		Cs, Wo, Qz, Fs, Mi							
Analyses made for	Fe	SiO_2	Ins.	S	Topas *d*	Topas *d*	Sn	WO_3	Sn	WO_3	Sn	WO_3	Sn	WO_3
Feed, total: assays, % or os. per ton	24.0	32.1	33.4	0.68	2.98	2.98	0.30	0.20	0.30	0.20	0.30	0.20	0.30	0.20
Cone feed: Size		1-in.~10-m.			1~1/4-in.	1/4-in.~10-m.	1-in.~10-m.		1-in.~10-m.		1-in.~10-m.		1-in.~10-m.	
Weight, % of total feed		23.1			29.5	15.4	75.0		75.0		75.0		75.0	
Assays	24.9	30.8	32.3	0.84	3.35	3.22	0.23	0.15	0.23	0.15	0.23	0.15	0.23	0.15
% of total feed values	23.6	22.2	22.4	28.0			57.8	55.6	57.8	55.6	57.8	55.6	57.8	55.6
Ferrosilicon medium: Size		<65-m., 60% <325-m.			<65-m., 60% <325-m.				<65-m., 50% <325-m.					
Sp. gr.		2.96			3.00	3.00	2.60		2.70		2.80		3.00	
Sink: % of cone feed		66.1			73.4	58.8	61.6		53.8		7.1		1.8	
% of total feed		15.3			21.7	9.0	46.2		40.3		5.3		1.3	
Assays	33.7	7.0	8.8	1.2	3.51	3.49	0.33	0.23	0.36	0.26	2.06	1.74	7.29	5.96
Recovery: On cone feed	91.3	15.1	17.9	94.0			86.8	97.3	82.5	96.0	62.4	83.1	55.6	71.6
On total feed	21.6	3.4	4.0	26.5			50.2	54.0	47.5	53.4	36.0	46.5	32.0	39.9
Float: % of cone feed		33.9			26.6	41.2	38.4		46.2		92.9		98.2	
% of total feed		7.8			7.8	6.3	28.8		34.7		69.7		73.6	
Assays	6.4	77.2	78.4	0.16	2.89	2.85	0.08	0.01	0.09	0.01	0.09	0.03	0.11	0.04
Fines: % of total feed		4.5			55.2		25.0		25.0		25.0		25.0	
Assays	21.7	38.6	40.4	0.78	2.99		0.51	0.35	0.51	0.35	0.51	0.35	0.51	0.35
	7.6	74.5	75.6	0.24										
	33.7	7.7	9.0	0.95										
Summary	*o*				*p*		*q*							

Notes on page 123.

a **Ap,** arsenopyrite; **Bo,** bornite; **Ca,** calcite; **Ch,** chert; **Cl,** clay; **Cp,** chalcopyrite; **Cs,** cassiterite; **Do,** dolomite; **Fl,** fluorite; **Fs,** feldspar; **Ga,** galena; **Gr,** granite; **Li,** limestone; **Lm,** limonite; **Ma,** malachite; **Mg,** magnesite; **Mi,** mica; **MnO,** manganese oxides; **Py,** pyrite; **Qt,** quartzite; **Qz,** quartz; **Rk,** dike rock; **Ry,** rhyolite; **Sd,** siderite, **Sh,** scheelite; **Sig,** siliceous gangue; **Sl,** shale; **Sp,** sphalerite; **Sr,** serpentine; **Ss,** sandstone; **St,** slate; **Tl,** talc; **To,** topaz; **Wo,** wolframite.

b Top; bottom, 3.06.

c Top; bottom, 3.13.

d Sp. gr., 3.5.

e Calculated composite.

f Float, comprising upward of 60% of new feed, is of low enough grade to be discarded.

g Sink is of good grade and represents a good recovery on cone feed. Float and <10-m. would probably be ground for table or froth flotation (Sec. 12).

h The superior separation in the finer fraction is due to the better liberation of fluorspar at this size. Separate treatment of two sizes from 1/2-in. to 10-m. was superior to treatment of the longer-range combined product. Recovery was about 50% in a product of flux grade.

i Percentage rejections of lime and silica are high, but the product still contains too much contaminant. See specifications under "Washington magnesite," note *k*.

j See comment on preceding test.

k Specifications for "High-grade magnesite rock" are: Less than 1.5% CaO and 2.0% SiO_2; those for "Standard-grade rock" are: Less than 2.5% CaO and 3.27% SiO_2. All of the sinks but that at 2.90 sp. gr. satisfy the latter specification; only the last test at 2.95 sp. gr. satisfies the first. Rejection of lime and silica varied widely with the feeds, ranging downward from highs of 88% and 73% respectively. It is apparent that the grade of sink product and the concomitant rejections depend more upon the character of the feed than upon the sp. gr. of the medium within the range used.

l The calcine is marketable and the recovery of 60% is probably economically superior to any otherwise obtainable.

m Material rejection of SiO_2, sufficient to make the product marketable but insufficient to make it of metallurgical grade. The small increase in silica rejection with increase in sp. gr. of medium indicates that the silica in the sink is locked.

n 35% of feed rejected; high recoveries on material subjected to sink-and-float.

o Silica rejection in >10-m. was 84%. Recovery of iron was 89% in a concentrate carrying 7.7% SiO_2.

p Sink-and-float recovered 31% of the total feed or 70% of the >10-m. product amenable as a high-grade topaz product.

q At 2.80 sp. gr. can discard 70% of dump material, retaining a sink containing 62% of the Sn and 83% of the WO_3. Combining this material with the <10-m. yields 78% of total tin and 91% of total WO_3 in 30% of the total feed, in a product assaying 0.78% Sn and 0.59% WO_3.

Applicability. Present (1943) methods of sink-float separation may be applied to the coarse (>1/4- or 3/8-in.) fraction of any ore or mineral mixture provided only, (1) that valuable and worthless minerals differ in specific gravity, and (2) that the dissemination is sufficiently coarse that an economically clean light fraction is freed in sufficient quantity by crushing to, say, 3/4-in. as a minimum. If finer crushing is required to free clean float, the easily treatable >1/4-in. fraction is likely to be too small in weight to justify the relatively elaborate installation for medium cleaning and reconditioning; if only heavy mineral is freed by coarse crushing, the medium density required is too high except in special cases of low-gravity minerals such as coal, brucite, sulphur, and the like.

Maximum size treatable is limited only by the size of passages required for removal of sink; coal is treated as coarse as 8-in. and ores up to 2-in. at present, but Holt (*PC*) asserts knowledge that 6-in. material can be treated.

Minimum size treatable easily at present (1943) is about 1/4-in. Below this size viscosity and surface friction become so large in view of the small downward gravity resultant that fine middling material tends to float and, with the fine float, form a mat or raft, which holds up coarser middling and carries it into the overflow. Fine heavy material is correspondingly slow settling and tends to crowd near the bottom, increasing the resistance to settlement of coarser lighter material and either choking the apparatus or driving more middling into the overflow. Laboratory and pilot-plant operation can go down to 10-m. (see Table 94). Spread between maximum and minimum sizes must not be too great, if differential-density operation is practiced, since this involves some reliance on rising currents to lift tailing, and the current required to lift coarse tailing would also lift small particles of rich middling and concentrate.

Sharpness of the gravity split demanded for economic recovery sets limits to applicability. Heavy liquids in the laboratory will make splits over a sp. gr. range of ±0.05; patentees claim a range of ±0.1 in commercial operation of heavy-medium processes; even with a larger range this is superior to jigs or tables which require ±1.0 difference in sp. gr. for anything approximating a clean separation unless a large amount of middling is to be made. This is because of the fact that both size and sp. gr. enter into the relative weights that determine resistances to movement by currents, while sp. gr. only enters into normal sink-float operation. It follows, of course, that sink-float products are cleaner; it is claimed that on Mesabi jigging ores (see Sec. 2, Art. 28) heavy-medium treatment puts less than 1% of true float in the sink (*vs.* about 10% by jigging) and not more than 2% true sink in the float.

Tables 95 and 96 give analyses of TRI-STATE and MESABI ores on which heavy-medium treatment has been economically successful.

Table 95. Sink-float analysis of Tri-State zinc ore (*RI 3469-R*)

Size, in.	Specific gravity of fraction	Weight, per cent.		Assay, % Zn	Per cent. of total Zn	
		Size fraction	Sink-float fraction		In size fraction	In sink-float fractions
1 1/4~3/4	.....	44.2	100.00	1.13	31.5	100.0
	<2.70	.....	95.71	0.19	.....	16.5
	2.70/2.75	.....	0.55	6.09	.....	3.0
	2.75/2.80	.....	0.29	9.24	.....	2.4
	2.80/2.85	.....	0.34	11.83	.....	3.6
	2.85/2.92	.....	0.70	14.36	.....	8.9
	>2.92	.....	2.41	30.58	.....	65.6
3/4~3/8	.....	30.5	100.00	1.30	25.1	100.0
	<2.70	.....	94.51	0.11	.....	8.2
	2.70/2.75	.....	0.88	6.59	.....	3.1
	2.75/2.80	.....	0.72	5.29	.....	1.5
	2.80/2.85	.....	0.60	12.18	.....	3.1
	2.85/2.92	.....	0.27	14.48	.....	4.1
	>2.92	.....	3.02	31.56	.....	80.0
3/8~1/4	.....	7.3	100.00	1.45	6.8	100.0
	<2.70	.....	95.02	0.15	.....	9.7
	2.70/2.75	.....	0.61	4.40	.....	1.8
	2.75/2.80	.....	0.38	8.82	.....	2.3
	2.80/2.85	.....	0.33	10.15	.....	2.3
	2.85/2.92	.....	0.37	14.49	.....	3.7
	>2.92	.....	3.29	35.44	.....	80.2
1/4~3/16	.....	5.5	.....	1.88	6.4	.....
3/16~1/8	.....	4.4	.....	2.40	6.8	.....
1/8~2-mm.	.....	2.9	.....	2.95	5.5	.....
<2-mm.	.....	5.2	.....	5.44	17.9	.....
Total	.....	100.0	.....	1.57	100.0	.....

Table 96. Sink-float analysis of western Mesabi jig tailing (*RI 3469-R*)

Size	Specific gravity	Weight, per cent.	Assay, per cent.		Per cent. of total	
			Fe	Insol.	Fe	Insol.
1/2~5/16-in.	<3.30	18.12	22.69	58.85	8.04	52.33
	>3.30	81.88	57.41	11.86	91.96	47.67
Total	.....	100.00	51.12	20.37	100.00	100.00
5/16-in.~5-m.	<3.30	20.63	23.42	63.88	9.81	55.75
	>3.30	79.37	55.94	13.16	90.19	44.25
Total	.....	100.00	49.23	23.64	100.00	100.00
5-m.~1/8-in.	<3.30	22.04	24.16	62.32	10.79	54.29
	>3.30	77.96	56.40	13.04	89.21	45.71
Total	.....	100.00	49.29	25.31	100.00	100.00

Tonnage of ore treated by sink-float operation in 1940 was about 5.5 million. In 1943 eight plants treated 10.5 million tons of lead, zinc, iron, tin, tungsten, and garnet ores.

Treatment difficulties increase with increase in sp. gr. of float and in quantity of middling; the former requires high-gravity suspensions, while the latter leads to a high rate of entry into and departure from the middling teeter column, with consequent danger of entrainment.

Capital costs of sink-float plants in Mesabi district (1938–39) were $14.80 per daily ton of feed for a plant to treat 350 long t.p.h. and $20 for one to treat 125 t.p.h. The MASCOT plant cost $35 per daily ton.

Sink-float *vs.* jigging. Table 97 compares performances by the two methods on iron ore at PATRICK plant of Butler Bros. G. J. Holt (*PC*) states that the sink-float operation recovered flats and porous material that the jig lost. Elmer Isern (*PC*) compares the sink-float plant at EAGLE PICHER with the former roughing jig plant as follows: Capacity increased 90%; connected horsepower decreased 30%; hp-hr. per ton treated decreased 21%; tons per man-shift increased 75%; tailing loss decreased 13%. Robert Ammon states (*PC*) that at MASCOT the recovery 1931–35 was 89% without sink-float operation and 1939–40 was 92–93% with sink-float; power consumption decreased 17% and tons per man-shift

increased 20%; roughing jigs formerly discarded 44% of mill feed as tailing with 11% of the zinc in the feed; the sink-float plant discards 57.5%, with only 5.5% of the original zinc.

Table 97. Comparison of sink-float and jig results on Western Mesabi iron ore at Patrick plant of Butler Bros. (*After Holt, 26 #9 MCJ 25*)

Specific gravity, average	Sink-float plant					Jig plant				
	Concentrate			Tailing		Concentrate			Tailing	
	Recovery, % weight	% Fe	% Si	% Fe	% Si	Recovery, % weight	% Fe	% Si	% Fe	% Si
2.90	88.9	55.75	11.89	21.91	60.23	71.0	55.46	12.01	41.57	31.20
3.00	85.1	57.42	9.56	31.98	44.08	79.9	56.04	11.54	40.75	34.08
3.05	80.2	58.26	9.05	36.97	37.91	66.9	57.76	9.91	46.48	24.53

Recent jigging practice on the Mesabi circulates a relatively large tonnage of sandy middling, which tends to change the character of the roughing layer of the jig bed to a heavy quicksand. De Vaney (*Feb. 1941 meeting, AIME*) reported jig tests on sized Tri-state feeds of the character treated at EAGLE PICHER the results of which compared favorably with sink-float operation. Sink-float concentrate contained less than 0.5% of float material, all of which was fine; tailing contained less than 2% sink. Jig concentrate contained 6 to 9% of float and the tailing from 45 to 50% of sink at the separating density of the sink-float medium.

Heavy Liquids

Introduction. Heavy-liquid separation for commercial dressing has been described in a number of patents issuing over a period of 50 yr. (*Ed 1 636*). The liquids prescribed for use have been more or less concentrated aqueous solutions of highly soluble metallic salts, zinc chloride; or organic liquids of relatively high specific gravities such as carbon tetrachloride (sp. gr. $1.582^{21°C}$) and other halogenated hydrocarbons. The impractical elements in all of these proposals have been the corrosive, unstable, and/or toxic nature of the liquids prescribed, their high first cost, and the difficulty and expense involved in reclaiming them from the separated products.

31. DU PONT CHLORETHANE PROCESS

The nearest approach to commercial success with heavy liquids reported is an experimental coal-cleaning plant at WESTON COAL CO., Shenandoah, Pa. (*139 #5 J 33*). The separating liquid used was pentachlorethane (C_2HCl_5; sp. gr. $1.678^{20°C}$); this liquid was available in commercial quantity at a unit price which, though high, was not beyond the limits of commercial practicability, if losses (consumption) could be kept to a low figure. This was attempted by thorough and complete filming of feed particles, prior to their introduction into the separating bath, with a water film, such wetting being aided and insured by the addition to the water of a small quantity (0.01% on the water) of a wetting agent such as starch acetate or tannic acid. Such an aqueous film resists displacement by the chlorethane, so that the latter cannot film or be absorbed by the solids, and the chlorethane being substantially immiscible with water drains away from the water-wetted surfaces readily when given an opportunity.

Treatment at the WESTON plant, which had a capacity of 100 tons of raw anthracite per hr., comprised preliminary crushing, screening to commercial sizes, and water-washing of the raw feed in the main breaker. The sized products were then sent separately, in order, to: (1) a WETTING-OUT SECTION comprising a shaking conveyor onto which fishtail sprays delivered wetting solution; (2) a shaking dewatering screen with 1/4-in. round apertures on which the wetted feed was sprayed with water to wash away silt and clay disengaged by the detergent action of the wetting solution; (3) a separating box containing a 2-ft. depth of the chlorethane overlain by a 2-ft. layer of water, with mechanical means for scraping out separately the layer of SINK that passed down through the chlorethane, and the layer of FLOAT (coal) that penetrated the water layer but did not enter the chlorethane, and a further adjustable mechanism for diverting middling, more or less suspended in the chlorethane layer, upward or downward into the sink or the float zone; (4) separate draining and washing screens for the sink and float products; (5) a recovery system for the chlorethane, comprising a settling tank in which the chlorethane and dirt settle, from which water overflows and the thickened sludge is drawn; and a batch-type steam still for distilling the sludge, vapor from which passes to a condenser that delivers condensate to a cooler and thence to a tank in which the chlorethane and water stratify and are separated.

All apparatus containing chlorethane must be liquid- and vapor-tight on account of the toxicity of the compound when inhaled, ingested, or absorbed through the skin. Any small quantity of the separating

liquid remaining on the products is asserted to evaporate without harm. There is no fire hazard connected with the use of the chlorethane or of others of the halogenated hydrocarbons, since they are nonflammable. Consumption of about 3/4 lb. of separating liquid per ton of cleaned coal is reported.

Performance, as measured by condemnations, was 19 3/4 cars (50-ton) out of 295; float in the sinks was less than 1% more than that in zinc chloride laboratory controls. The tests indicated that the capacity of the separating tank was about 50 tons of feed per hr. per sq. ft. of surface of separating bath, but, despite this high capacity and the relatively minute consumption of separating liquid, costs are still too high to justify adoption in anthracite practice.

WATER-IMPULSE SEPARATORS

Water-impulse separators are those in which the different inertias of particles of different sizes and specific gravities, when subjected to the impulse of moving streams of water, cause the different particles to travel separated paths.

Water impulse is utilized in the film sizers and in a small number of relatively ineffective concentrating apparatus utilizing the principles of free- and hindered-settling classification.

32. FILM SIZING

Film sizing is a form of gravity concentration in which settling plays the smaller part, separation is predominantly on the basis of particle size, but the difference in resistance to scour by particles of the same size and different specific gravities is utilized. Apparatus consists essentially of inclined planes, with smooth to finely rough surfaces, on which material to be separated is subjected to the scouring action of relatively thin layers of flowing water.

When a thin film of liquid flows over a plane solid surface, the layer next to the surface remains substantially at rest. The velocities of successive layers outward from the solid surface increases progressively to a maximum near, but not quite at, the free surface, where it falls slightly. Since the ability of a current of water to transport solid varies as a power of the velocity greater than one, the upper layers are the more effective. This has two results. A particle in suspension in the current is acted upon by a greater force near its upper than near its lower edge, an overturning motion the resultant of which is toward the lower layer of the film is imparted, and the settling rate is accelerated. After the particles reach the separating surface (and it is only such particles that can be saved), the current moves them down-slope by rolling, sliding, or by the movement of alternating suspension and deposition that Gilbert (*Prof. Pap. 86 USGS*) calls LEAPING. Rolling and sliding can be considered as due to a substantially non-eddying stream; leaping is caused by eddies. In rolling and sliding, the larger particles, being the ones that project farthest upward from the table surface, are the ones that are acted upon by the most powerful currents, and they move most rapidly, notwithstanding their greater mass. Of two particles of the same size but of different specific gravities, the heavier moves more slowly, under the equal forces applied, by reason of its greater mass. The result, then, of the rolling and sliding action of the film on the solid particles in contact with the separating surface, considered alone, is to cause a separation of fine from coarse and heavy from light, the finest heavy material remaining near the upper end and the largest light grains overflowing the lower edge. This is true film sizing. If any grain is so large as to stand above the water surface, the transporting force on such a grain, although the maximum that can be exerted by the film, will have less effect than on the large submerged grains, and such a projecting grain will remain near the feed point.

When, for any reason, the separating surface is rough, which, necessarily, is the case even on the smoothest bottom as soon as solid matter begins to settle out, several new effects enter. The depressions in the separating surface act as minute riffles in which fine particles settle and are protected from the sweep of the current, eddying within the depressions causes concentration of heavy mineral, the rough surface prevents sliding and retards rolling, and eddies are produced in the main stream which sweep smaller particles upward into momentary suspension and cause them to move down slope with a velocity equal to that of larger particles. The net result is to dull the sharpness of separation of heavy from light mineral.

The flowing stream advances in a series of waves. This fact aids in moving the larger particles, either because the waves strike definite blows against the larger particles, while failing to strike the smaller, or because, when the crest of a wave is passing, large particles that projected in the trough are submerged.

Davis (*86 J 905*) developed experimentally the following empirical relation between slope s, in degrees, of a ground-glass surface, water quantity w in lb. per min., and diameter in mm. D of the average grain of quartz to be washed from a quartz-galena pulp.

$$\sin s = \frac{1}{96}\left(\frac{275 - 50\sqrt{1/D}}{w} + \frac{10}{\sqrt[4]{1/D}}\right)$$

This equation gives no necessary clue to the real relation existing between these quantities and is useful only within the range of the experiments.

Classification of film sizers may be made on the basis of whether true film sizing or sluicing predominates in the action: in continuous buddles, it is the former; in building buddles and strakes, the latter.

33. REVOLVING ROUND TABLE

Description. This is the modern form of buddle. It consists (Fig. 79) of an obtusely conical surface, substantially smooth, carried on an umbrella-like frame, supported on a vertical shift resting in a step bearing at the bottom and carrying at the upper end a worm gear by means of which the whole is caused to revolve slowly. A fixed feed distributor supplies pulp to from one-third to three-quarters of the upper surface. Fixed launders around the periphery receive tailing, middling, and concentrate. Wash water is supplied over the remaining surface at the center and there may also be a spirally disposed spray pipe suspended over the surface along a line such as XX (Fig. 80) that will give a final wash to concentrate before its removal. A strong jet Y, placed just ahead of the tailing launder, insures removal of the last of the concentrate.

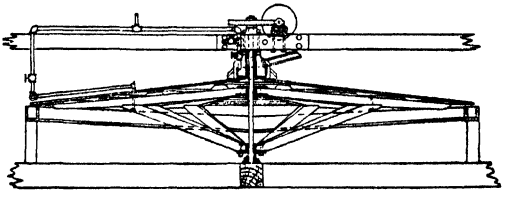

FIG. 79. Revolving round table (single-deck).

In Fig. 80, consider three particles of the same size but different weights, say concentrate, middling, and tailing, respectively, starting at point a. The motion of each with respect to the table surface is radial in direction, but the velocities will vary inversely as some function of the specific gravities. After a short interval of time, therefore, the radial components of travel will be as indicated by the vectors c, m, and t, respectively. The angular travel will be the same for all three, say to the position of radius r_1; the resulting positions will be c_1, m_1, and t_1, respectively, and the paths the dotted spirals connecting a with the respective points. After a second increment of time, during which the original radius has moved to the position r_2, and the radial travel of the particles has been less than in the preceding interval by reason of the lessened velocity of the pulp stream due to its increasing width and decreasing depth, the tailing particle will have left the table at position t_f, while middling and concentrate particles will be at m_2 and c_2, respectively. They will finally leave the table at positions m_f and c_f. Differences in rate of radial travel will, of course, be greater if the concentrate and middling particles are smaller than the tailing particle.

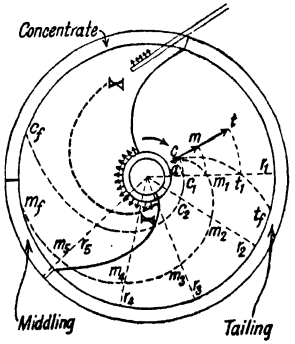

FIG. 80. Sketch of action of revolving round table.

Evans revolving round table was furnished with a fixed conical center head with spiral periphery, so arranged that concentrate depositing on the upper portion of the table in the feed sector would pass under the head and be protected from further washing by feed pulp, but would be exposed when the wash sector was reached. This type of table was extensively used in LAKE SUPERIOR copper mills and in the early days at ANACONDA.

Multiple-deck revolving round tables (Fig. 81) were devised to overcome the handicap of low capacity. The limit was reached in the 20-deck Anaconda table shown. The decks were 19 ft. diameter, built of concrete laid on sheet-steel support, spaced 1 ft. apart vertically. The 20 decks were carried on eight steel columns around the outer periphery and the columns rested on a steel ring running on wheels on a circular track. Motion was transmitted through a pinion to a circular rack carried on the lower side of the supporting ring. A central shaftway, 4 ft. in diameter, carried the distributing pipes for pulp and wash water and enclosed a 30-in. square ladderway.

Extensive tests were carried out at ANACONDA preceding the construction of the round-table plant (1912). The reports of these tests by Crowfoot (*49 A 417*) and Laist and Wiggin (*49 A 470*) are substantially a textbook on the subject and form the principal basis for the following paragraphs.

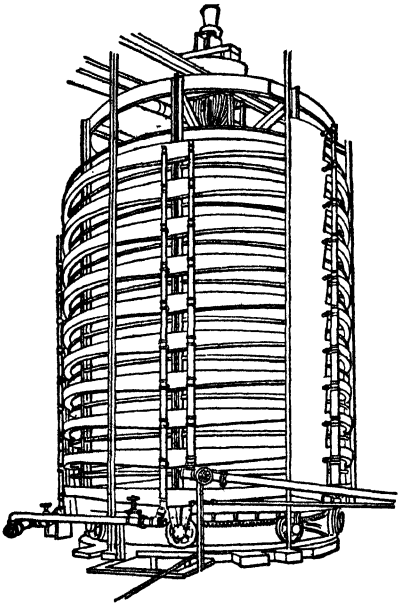

FIG. 81. Multiple-deck revolving round table.

Surface. Planed wood, linoleum, medium-weight canvas, and cement concrete troweled to a finish approximating that of the medium-weight canvas were tested. Results are given in Tables 98 and 99. Comparison between cement decks with rough and smooth finish is shown in Table 100.

When using rough-surfaced cement and canvas-covered decks, solids built up as much as 3/8 in. deep. Yet the tests showed that notwithstanding the building, the rough deck afforded better protection for sulphide and held it back against the wash water.

Fluted- and corrugated-glass surfaces have been tested against wood on revolving round tables in the CORNISH TIN MINES (*14 MM 32, 89, 90, 154, 333*). Various forms of glass surface have been tried, but the best results were obtained with about 16 flutes to the inch, 1/32 to 1/16 in. deep, with crests either sharp or rounded. In one 16-hr. test on an 18-ft. glass-top, concave table with corrugations set at right angles to the slope, slope 1.5 in. per ft., when running against a wooden deck of the same diameter sloped 1.25 in. per ft., the glass top yielded 847 lb. of concentrate assaying 32.2 lb. Sn per ton and the wood 1,557 lb. of 15-lb. concentrate. The tailing on both decks carried 6.5 lb. Sn per ton and the feed 9.2 lb. Sn per ton. The feed rate on the glass deck was 5.7 tons per 24 hr.; on the wood, 3.8 tons. The glass deck worked under the disadvantage that the deck was pyramidal rather than conical so that there was a rush of pulp in the valleys at the joints. Tailing assay at the center of a glass section was 5 lb. Sn per ton against 7.5 lb. at the joint. Trewartha-James (*14 MM 89*) says that the glass top is very sensitive to variations in size, pulp density, and mineral content and that the pulp density must be closely correlated to the slope. The glass top is said to be better than the wood on rounded particles.

Contour of surface. The length of the cross-section of the pulp or wash-water stream on a convex round table, cut along a line equidistant at all points from the center of the table, increases, obviously, as the distance from the center to the chosen section increases. Since the volume of water flowing down any given sector is substantially constant for any given position of the sector, the thickness of the film must necessarily decrease as the periphery is approached.

On any given sector in position for concentrate removal the solid near the apex of the sector is coarser and richer than that near the rim, which shows the action of the round deck as a whole is not true film sizing but rather progressive deposition of the heaviest particles as the velocity decreases toward the rim, after which film sizing removes the larger gangue particles.

Table 98. Comparison of wood, linoleum and cement deck surfaces on revolving round tables at Anaconda Copper Co.

	Kind of deck		
	Wood	Linoleum	Cement
Tons solid per 24 hr.	4.4	4.5	4.5
Per cent. solids in feed	7.6	7.5	7.5
Assay of feed, % Cu	2.77	2.75	2.76
Assay of concentrate, % Cu	5.29	5.92	7.03
Assay of tailing, % Cu	1.55	1.65	1.61
Recovery, %	62.1	55.3	53.8 *a*
Ratio of concentration	3.1	3.9	4.7
Water, fresh, g.p.t. of feed	6,022	4,974	5,424

a Results on cement decks were greatly improved in later work. See Table 100.

Slope affects recovery, grade of concentrate, and capacity. It is interdependent with quantity of wash water, a flat slope requiring more water to produce a given grade of concentrate than steep slope. On the other hand, steep slope tends to lower recovery. Capacity is greater with steep slope. Standard practice is 1.25 to 1.5 i.p.f., being lower the finer the feed, the heavier the heavy mineral, and the greater the spread in specific gravities.

Speed determines the horizontal component of velocity of particles and, therefore, fixes the radial velocity required to discharge products at the proper places on the periphery. High speed of revolution requires steep slope and much wash water; low speed, *vice versa*. In LAKE SUPERIOR copper mills the speed on relatively coarse sandy feeds is 1 r.p.m. In some of the slime-testing work at ANACONDA 1 rev. per 100 min. was tried, but channeling occurred. Increase to 1 rev. in 19 min. eliminated channel-

ing. One rev. in 4 min. was the speed for the 20-deck machines when run to make finished concentrate and tailing and a circulating middling. At OHIO COPPER Co. the speed of 20-ft. machines was 1 rev. in 72 sec.

Diameter affects the length of separating surface parallel to the flow of material and determines the allowable duration of feed. With small diameter the time required for the sheet of concentrate to travel from feed to tailing-discharge point is relatively short and duration of feed to a given section must be made correspondingly short by increasing speed of revolution. Greater diameter or less slope permits lower speed.

Feed is usually unclassified slime not amenable to flotation. Results are invariably improved by de-colloiding (Sec. 8, Art. 7), in order to get away from suspensoid formation (Art. 29) with resulting loss in fine-sand values. Feed pulp should be near 10% solids. Percentage of surface fed varies with results desired; it is a matter of experiment for any particular case.

Table 99. Comparison of cement and canvas deck surfaces on revolving round tables at Anaconda Copper Co.

	Kind of deck	
	Cement	Canvas
Tons solid per 24 hr.	8.3	8.3
Per cent. solids in feed	9.3	9.8
Assay of feed, % Cu	3.36	3.46
Assay of concentrate, % Cu.	7.84	5.79
Assay of tailing, % Cu	0.93	0.94
Recovery	82.0	87.0
Ratio of concentration	2.9	1.9
Speed, r.p.h.	3	3
Slope of deck, i.p.f.	1.2	1.13
Water, fresh, g.p.t. of feed	1,218	1,517

Note. Crowfoot states that the extra cost of handling, transportation and smelting of the lower-grade canvas-deck concentrate would probably more than offset the increased recovery.

Water consumption depends upon the size of feed particles, grade of concentrate desired, and slope and character of deck surface. Water is supplied with the feed, as dressing water at or near the center, and as spray water for concentrate removal near the periphery. The 20-deck, cement-surface tables at Anaconda, treating 6 to 7 tons solid feed per deck per 24 hr., required 3 gal. dressing water and 6 gal. spray water per min. The feed pulp contained 10 to 15% solids. Coarse feed requires the most water; more water is required for high-grade concentrate than for low-grade. Canvas decks require more water than cement. Linoleum decks require less water than cement; wood decks require more. *Richards* gives the average water discharged per ft. at the periphery of 18-ft. tables in LAKE SUPERIOR mills as 31.8 g.p.m. pulp water; 10.6, dressing water; and 9.5 spray water.

Power consumption is about 0.15 to 0.25 hp. per deck for tables 15 to 18 ft. diameter, the lower figure applying to the multiple-deck tables. The 20-deck tables at Anaconda each had a 5-hp. motor and actually consumed about 3 hp.

Attendance required is low, especially if the feed is regular. At Anaconda each operator took care of four 20-deck tables.

Capacity depends largely on the size of feed and slope of deck, being higher for relatively coarse feeds and steep slopes. At LAKE SUPERIOR mills 10 to 20 tons of relatively sandy feed was treated per deck per 24 hr., the decks ranging from 16 to 20 ft. diameter. Final figures on ANACONDA slimes were 6 to 7 tons per 24 hr. per 19-ft. deck or about 45 sq. ft. of deck area per ton of total feed, including 8 to 10% returned middling. At OHIO COPPER Co. a 20-ft. deck treated 12 tons dry slime per 24 hr. and could treat 15 tons without crowding, making, however, only 20% recovery as against 54% at Anaconda.

Table 100. Comparison between rough-finish and smooth-finish cement-deck round tables at Anaconda

Character of feed	Rough finish			Smooth finish		
	Medium	Fine	Fine	Medium	Fine	Fine
Tons solid per 24 hr.	31.5	12.3	4.8	20.2	14.0	6.3
Per cent. solids in feed	16.5	9.0	7.1	11.9	7.1	7.7
Assay of feed, % Cu	4.25	3.37	4.23	4.86	3.23	2.63
Assay of concentrate, % Cu	18.90	16.64	19.06	17.00	16.08	13.90
Assay of tailing, % Cu	2.21	1.47	1.82	2.34	1.51	1.01
Recovery, %	54.0	62.1	63.0	60.5	58.8	66.6
Ratio of concentration	8.2	8.0	7.2	5.8	8.4	8.0
Water, dressing, g.p.t. of feed	440	2,035	3,746	651	1,424	3,378
Water, concentrate removal, g.p.t. of feed	814	2,480	6,078	1,094	1,171	2,491
Water in feed, lb. per min. per ft. of total circumference	4.15	2.88	1.70	3.88	4.74	1.95
Water, dressing, lb. per min. per ft. of total circumference	1.39	2.60	1.82	1.34	2.15	2.11
Water, concentrate removal, lb. per min. per ft. of total circumference	2.86	3.32	3.18	2.40	1.79	1.69
Speed, r.p.h.	2	2	2	2	2	2

Recovery. Probably 40 to 50% is the average range of recovery on slime feed. Some LAKE SUPERIOR recoveries ran as high as 80%, making a low-grade concentrate. The average of all ANACONDA experimental work showed 54% net recovery of silver and copper in a concentrate assaying about 6.5% Cu from a slime feed assaying 2.25% Cu.

Applicability. Round tables are used at present only for ores that contain mineral of high unit value and not at present susceptible to separation by flotation. Practically this means cassiterite. See Sec. 2, Fig. 44.

Circular stationary buddle is a stationary round table with the feed apron, spray pipes, and take-off launders carried on a revolving frame. Principles of operation of the two machines are the same.

Building buddle, in simplest form, is a rectangular box, usually with slightly sloping bottom, the lower or discharge end of adjustable height. Feed is distributed across the upper end by means of a distributor and flows through the box, the lighter material overflowing at the lower end. Solid particles deposit initially in order of size and weight, the heavier and larger particles near the pulp inlet, ranging gradually to the finest and lightest near the discharge. The slope of the surface of the deposited solids increases to a maximum, and with this increase the surface becomes smoother, owing to deposition of fine heavy mineral, and the pulp stream becomes thinner. Under these circumstances less and less coarse gangue is able to remain near the head end, but is rolled down-slope. When the slope of the settled solids becomes so steep that an excessive amount of concentrate is carried down, the height of overflow is raised, the slope thus lessened, and building again proceeds. If solids build up too rapidly at the head, the feed rate should be increased or feed pulp diluted to increase the velocity of the stream. After the overflow level has been raised to the maximum height feeding is stopped, the bed of solids is marked off into sections representing concentrate, middling, tailing and slime, and the respective sections are shoveled out separately. During the process of building, the surface of the depositing solids should be swept lightly with a cloth or broom to prevent the formation of banks and resulting channeling.

In a building buddle treating a feed containing relatively coarse sands, the action after the bed has begun to deposit is substantially the same as that on a canvas table. With very fine feed the surface of the deposited solids is substantially smooth and concentration takes place largely by film sizing.

Circular building buddles are a development from the foregoing in which the building box is a cylindrical tank usually 18 to 20 ft. diameter and about 18 in. deep with outlet pipes at various levels. A conical feed sole 5 to 6 ft. diameter at the center and overhead arms revolving 5 to 12 times per min. carrying sweeps of rags or twigs for brushing the building surface are provided. The products form concentric rings which are shoveled out separately.

34. STRAKE

Description. The strake is a shallow, usually broad, sloping trough with the bottom fine-roughened, used principally for saving gold from relatively fine pulps. Its action is both film sizing and sluicing; one or the other action predominates according, in part, to the construction, and, in part, to the conditions of operation. The collecting surface is blanket, plush, corduroy, carpet, canvas, silent felt, hides, or like material. These materials serve much the same purpose as riffles, but they have shallower depressions, which are sufficient to hold concentrate against the wash of the pulp-carrying current but not deep enough to form much of a bed.

The WIDTH is usually made that of the blanket or other bottom covering or some multiple thereof; the DEPTH of the sides is merely sufficient to guard against splash, say 3 or 4 in.; the LENGTH depends upon the ore and upon the results demanded but varies in general between 5 and 50 ft. The slope is usually between 1 and 2 in. per ft., and the feed pulp ordinarily carries from 5 to 25% solids, but may carry much more. Pulp is distributed evenly over the width and allowed to flow for a definite time, predetermined by experience and dependent upon the time required for the concentrate layer to build down to the discharge end. The feed is then cut off and, with or without a preliminary washing, the concentrate is removed, whereupon feed is again started. Variety lies in the form of covering and in the method of removing concentrate.

Frame is primarily a film-sizer consisting of a slightly inclined smooth-bottomed rectangular trough, open at the lower end to allow free egress of pulp and wash-water streams. It is from 3 to 5 ft. wide, 10 to 20 ft. long, with bottom of smoothly planed boards, and a slope ranging from 1 in. per ft. for the finest material to 2.5 in. per ft. for fine-sand feeds. It is fed over a distributing board with a thin stream of pulp. A thin bed of heavy material builds on the separating surface, gradually extending to the discharge end. The surface is worked over with wooden scrapers or brooms to prevent channeling. Just before the advancing sheet of concentrate reaches the discharge end feed is cut off, the deposit washed with clean water to discharge a middling, then concentrate is removed with a jet of water, or swept off. By building frames in pairs and providing for diversion of feed pulp to one or the other as desired, and by arranging them to tilt sidewise for washing, considerable time may be saved, one being fed while the other is being washed. Three frames, forming the sides of a triangular prism, mounted on a properly inclined axis, allow practically continuous operation. Water-tilting boxes lever-connected to diverting launders for the products have been used to make the work automatic. The frame is easily constructed and is a highly useful slime concentrator for small preliminary plants.

Capacity depends upon character and size of feed. If sulphides are to be saved, about 0.1 ton of solid per ft. of width per 24 hr., in a pulp containing about 10% solids, is a fair basis for estimate for slimes, and about 1 ton at 15 to 20% solids for sands. Capacity is higher for native metals.

Recovery is low; GRADE OF CONCENTRATE is higher than on rougher surfaces.

Canvas table has been widely used for treating slimes in gold and base-metal concentration. It is better adapted for treating fine feeds than the blanket strake, is usually wider, and the length is less in proportion to the width. Operation is the same as that of the frame. Canvas is not removed for washing concentrate, as is done with blankets, but feed is stopped, deposited mineral is washed with a stream of clean water, then swept off with a broom or flushed off with a flat-jet hose.

Wide use was made of canvas tables in California gold mills prior to the adoption of cyanidation, and in base-metal mills prior to the introduction of flotation. At present they are used, under the name of CANVAS FRAMES OR RAGGING (ROUGHING) FRAMES in Cornish tin mills and, to a limited extent, supplementing cyanidation in small gold mills.

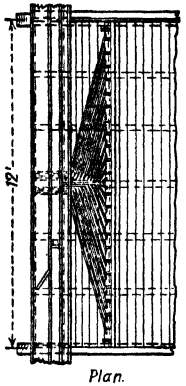

A typical form is shown in Fig. 82. Width ranges usually from 3 to 12 ft., length from 10 to 50 ft., slope from 0.5 to 3 i.p.f. Capacity is extremely variable and is dependent on the kind of ore, size of feed, slope, water quantity, and grade of concentrate and tailing demanded; average is about 0.01 to 0.15 ton per sq. ft. per 24 hr. Weight of canvas ranges from 8-oz. to 4-oz. duck. It is usually stretched lengthwise, for simplicity of construction, although this requires heavier canvas for a given degree of resistance to flow than would be required if the warp of the duck were placed across the stream. The life of canvas is from 8 mo. to 1 yr. under average service, according to the weight used, when protected from the fall of the feed stream by a board, turned when worn too smooth on the upper side, and slipped longitudinally at intervals to bring new places over the joints of the underlying boards. Automatic alternation of feed pulp, wash and flushing water, with automatic throw of the concentrate-tailing splitter has been operated by means of levers from a water-tilting box (see Sec. 19, Art. 3).

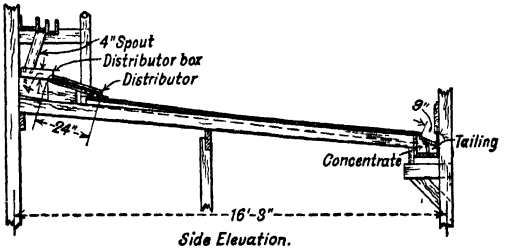

FIG. 82. Canvas table.

At TUL-MI-CHUNG (*119 P 808*) canvas tables were used for copper-gold-bismuth ore high in sulphide. The feed was tailing from Deister tables treating flotation tailing (about 0.2-mm. maximum size). Width, 7 ft.; length, 40 ft.; slope 1.25 to 1.75 i.p.f., the former best. One man attended 4 machines. Concrete strakes 4 ft. wide by 50 ft. long on 1.75-i.p.f. slope replaced canvas. Concrete was 3 to 6 in. thick tamped level, dressed to slope with a 0.75-in. layer of 1 : 1 cement mortar carefully troweled, which, when nearly dry, was dusted with dry cement and scored lightly transversely with a wire comb with teeth at 1/8-in. intervals. Three days were allowed for setting. Twelve of these strakes treated 450 tons solid per 24 hr. (0.13 ton per sq. ft.) in a pulp containing about 12% solids and recovered about 10¢ in gold per ton treated.

At SUAN mill (*119 P 920*) the ore was similar. The feed was tailing from cascade flotation, about 5% on 100-m. 21 strakes, 30 in. wide by 50 ft. long sloped 1 i.p.f. covered with 8-oz. duck, treated 250 to 280 tons solid per 24 hr. (0.11 ton per sq. ft.) and made a low-grade concentrate, but were overfed.

At the COMBINATION MILL, Goldfield, Nev. (*94 J 208*), milling gold-quartz ore, canvas tables treated 54% of the total mill feed and made from 7 to 13% of the total recovery. Feed contained 85.8% material through 200-m. and 93.1% of the gold recovered came from this size. The cost per ton (1912) was divided as follows: Labor, 18.5¢; repairs, 3.0¢; power, 3.0¢ (including vanners for retreatment of concentrate); acid for removing calcareous deposit from canvas, 0.5¢; sundry supplies, 5.0¢; total, 30¢.

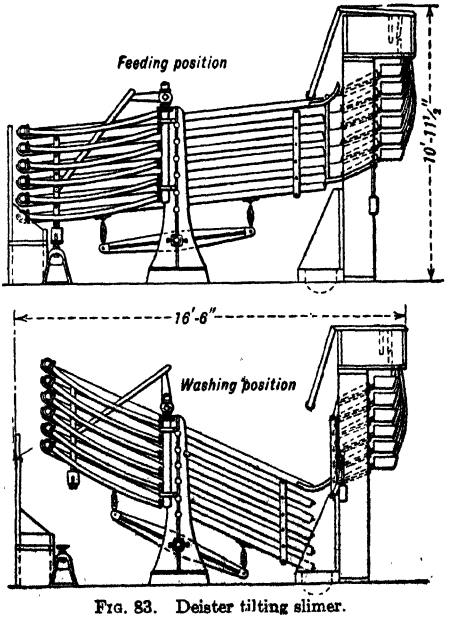

FIG. 83. Deister tilting slimer.

Tilting canvas table. Several forms have been built. The DEISTER is shown in Fig. 83. It consists of a series of relatively small canvas tables mounted on a tilting framework actuated by a timing device. When in feeding position, pulp flows over the canvas decks from the multiple feed box, concentrate adheres to the deck, and tailing passes into the tailing launder. After a time predetermined by experiment, the feed is shut off, the decks tilt into washing position, and flushing water is introduced with sufficient velocity and for sufficient time to remove concentrate, when the decks again tilt to the feed position and feed is again turned on automatically. (See also *116 J 766* and *34 MW 453*.) The feeding period ranges from 10 to 30 min. and the washing period from 30 sec. to 1 min. The capacity per square foot of canvas surface is the same as for stationary canvas tables. WILFLEY multiple-deck tilting slimer combined with the multiple tilting deck a simple eccentric shake to aid in stratification of the pulp, and a preliminary water-washing period preceding the flushing period, during which wash the worst of the gangue was removed.

Rotary-tray canvas table is described by Martin (*32 M & M 428*) as having been used successfully in several Mother Lode Gold mills. It consists essentially of a plurality of trays carried on a revolving framework and successively presented to fixed sources of feed and wash water, with final removal of concentrate by a strong, broom-shaped jet. Trays are 4 ft. wide by 3 ft. deep, 21 to 24 trays to a deck and 6 to 10 decks. Speed, one revolution in 15 to 20 min. Canvas, felt, and sanded asphaltic paint were used for tray surfacing. Another machine with the same idea had the trays mounted on wheels running on an undulating track which acted to increase the slope of the tray when the discharge position was reached.

Planilla is a Mexican device that has its counterpart in China and the East Indies. It consists of a concave sloping surface, a part of which is usually roughened in some way. The apparatus shown in Fig. 84 was built of masonry and concrete and had a concrete concentrating floor. Brick, wood, and

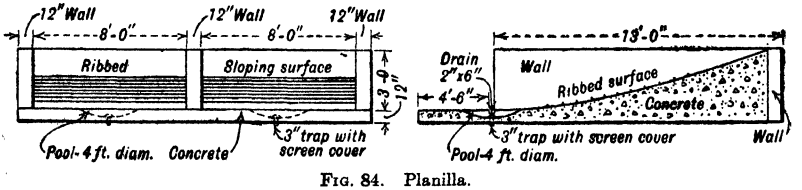

FIG. 84. Planilla.

sod turned root-side out have also been used for floors, the wood and sod for treating very fine material. The slope and curvature of the surface vary widely.

Baron (*30 M & M 377*) gives the materials in one planilla such as pictured as 1 bbl. cement, 1,000 lb. lime, 5 tons crushed waste, and sufficient large rocks for walls and foundations. The labor required was about 5 days for one native mason and two helpers.

Operation. A batch of crushed ore is shoveled onto the higher part, then drawn forward a small amount at a time and washed by throwing water on it or directing a stream against it from a hose. The rough concentrate remaining on the slope after this preliminary washing is turned over and over and coarse material raked up-slope while any impoverished surface layers resulting from the turning and washing are carefully scraped off and thrown aside. Concentrate collects in a hard layer beginning at about the point of change of curvature; middling collects below the concentrate and down to the water level; tailing is washed into the sump. Middling is recleaned by another washing either with or without further crushing.

Performance. At the SAN ROBERTA MINE, Zacatecas, Mex. (*30 M & M 377*), a silver ore with lime-silica gangue and small percentages of iron and copper sulphides, crushed and carefully sized through 5-m., was concentrated 5 into 1 at the rate of 1 to 2 tons of feed per 9-hr. shift by 1 operator and 2 boys. Concentrate assaying 32 to 40 oz. silver was made from 8-oz. ore, and 48- to 60-oz. concentrate from 18-oz. ore, but this was exceptionally good work, obtained by careful sizing of the feed, and close supervision and management. The usual performance on such ore is from 0.5 to 1 ton per shift concentrated 3 or 3.5 into 1 with a recovery of 50 to 60%.

A brick-floored device of the same variety for coarse ore and a board-floored form for cleaning fine middling from the first are described by Collins (*19 IMM 191*) as used in China for treating vein tin Concentrate is recleaned in pans.

Blanket (Corduroy) tables are essentially finely riffled sluices in which the pile or mesh of some fabric or similar material forms small, irregular pockets in which heavy material settles and is held in miniature beds, where suspension is effected by eddies set up by the overflowing stream of pulp, by ripples, or, when gravel is running, by the light hammering of the gravel particles.

Use. Blanket tables, nowadays ordinarily covered with corduroy, had a tremendous upswing in popularity with the building of the Canadian gold mills, and with the political markup in the price of gold. The blanket is the cheapest method of saving moderately fine gold (30 to 35 μ) in ground pulps, from the standpoint both of first cost and of operation, provided it is not charged with tailing losses. It will scavenge gold out of tailing from careful and efficient flotation (*16 MMI 331; IC 6972;* Sec. 2, Fig. 37). It will rough coarse gold substantially completely from cyanide and flotation feeds and thus reduce materially cyanide time-factor and flotation-tailing assays; this is its most frequent use; it is in competition with jigs and unit flotation cells in such service, and they are generally preferred in large plants. It catches gold that an amalgamating plate fails to catch (*IC 6433*); it will catch and hold as

much or almost as much free-milling gold as such a plate; it requires much less skilled operators; and it can be screened against theft, with observation through the screening, while the plate must be left open for dressing. It is more effective the less sulphide there is in the ore, since sulphide tends to mat down the surface. On the other hand, it is not fouled, as are plates, by ores containing As, Bi, Sb, Pb, talc, clay, graphite, and acid mine waters. It is ideal for small gold mills treating oxidized ores in which there is not enough sulphide present to justify shaking tables or flotation, it has replaced amalgamation on the Rand (*112 A 760*) and at DOME (*IC 7085*). In the grinding circuit, it prevents build-up of coarse gold. It is used successfully in some small gold mills as the sole concentrating method. It is used in the TRANSVAAL as the sole concentrator for the platinum minerals (*IC 7085*).

Construction. The usual blanket table is a shallow trough, 3 or 4 ft. wide and 5 to 10 or 12 ft. long. It should be built with a floor that is plane and will not warp or crack in service, and lined as with linoleum or sheet metal, to prevent leaks and losses in corners and joints. Slope is normally 1 1/2 in. per ft. and the usual range is from 1 3/8 to 2 or 2 1/2 in.; a range of 3/4 to 3 in. will cover all contingencies. At SUYOC (*IC 7085*), treating a complex sulphide ore, slope required was 1 1/2 i.p.f. for <6-m. ball-mill discharge and 1 i.p.f. for 95% <200-m. classifier overflow. Slope on the scavenging section in the tailing line at UTAH COPPER is 3/16 i.p.f. Provision for variation in slope may be built in, as by hinging the table on its support and raising or lowering by gear or shims, but unless variation is contemplated as an operating control, it can be effected satisfactorily and more cheaply by shimming under the frame.

COST of 3×12-ft. and 3×19-ft. tables at DEMONSTRATION (1930's), built by the mill carpenter, averaged $25 per table (*IC 7085*).

It is better, when length is to be increased beyond the normal 5 or 6 ft., to break the deck transversely to provide steps of a few inches; the resulting pulp drops aid recovery.

Launder-type tables, used principally for scavenging, are made about 1 ft. wide by 75 to 500 ft. or more long, according to the fineness of the gold, the quantity, and the depth of pulp running.

Covering may be blanket, carpet, loose-weave canvas, skins with hair, coco-mat, burlap, ribbed rubber mat, or sponge rubber, but the common covering is a cotton corduroy, English pulp-sifting cloth, which has a long and relatively stiff pile with wide (3/8-in.) and relatively pronounced ribs (Fig. 85). It comes in bolts, 28 and 36 in. wide by 77 yd. long, and is ribbed lengthwise of the roll. Price (1939) is $2 to $3.50 per yd. according to width and quality. For use, it is cut into strips of length sufficient to cover the table transversely and project up the sides. It is laid in with ribs at right angles to the flow and the nap against the stream (high side of the rib upstream). The strip at the lower end is laid in first and successive strips are then laid in with a 2- or 3-in. overlap. Covering is usually held down by flat iron bars laid along the sides and a flat plate laid across the top to take wear of the feed stream. At DEMONSTRATION (*loc. cit.*) 1/2 × 2-in. cleats are wedged across the corduroy at the joints, serving both to hold down and as riffles to aid in gold saving.

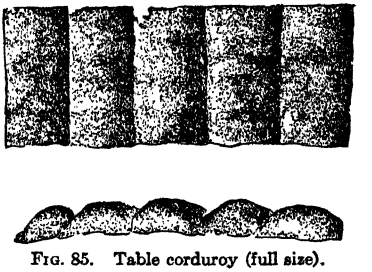

FIG. 85. Table corduroy (full size).

Life of corduroy varies with tonnage and size of feed, frequency of washings, care in handling, and provisions made for reinforcing. Usual range is 3 to 18 mo. At DOME life is prolonged by a backing of cheesecloth, and by light canvas binding at the ends of the strips.

Operation is principally confined to washing the cloth at intervals determined fundamentally by the progress of concentrate filling down the table, but usually, except with rich spotty ores, on a predetermined schedule, ranging normally from once per hour to once per shift. Often only the top strip is washed at the short interval, the others as they fill up. Scavenging tables are washed less frequently, *e.g.*, once every day or two, to once in 40 days at UTAH COPPER.

Washing is done in a hopper-bottomed iron tub or tank, somewhat larger than the stretched strip of blanket. A heavy screen, about 1-in. mesh, is fitted to the tub so that it forms a diaphragm about 1 ft. below the rim, and is padlocked into place. The tub is filled with water to a level a few inches above the screen. At DOME a deeper tub is used, without the submerged screen, and the blanket is sloshed up and down therein with the riffles held vertical.

When removing blankets, feed is cut off, clear water run for a short interval to wash off current ore, the hold-down means are taken out, and the strips of blanket are rolled up, top side in, and lifted out. Washed strips are then put in and pulp flow restarted. A better arrangement, which eliminates stoppage of the feed stream, is to provide one or more spare tables to which feed may be diverted.

The filled blankets are taken to the wash tub, unrolled inverted thereover, and vigorously sloshed in the water and against the screen. Scrubbing is unnecessary.

Frequent washing is essential to successful operation. The effectiveness of corduroy is due in large measure to the eddying caused by the uneven surface. As soon as the valleys fill this advantage is lost; the surface becomes smooth and hard, and not only concentrating but gold-holding power is lost.

Slope should be watched and so adjusted that the heaviest sulphide is just carried over the ribs.

Pulp density affects both slope and recovery. It is as it falls when the table is in a grinding circuit, and may be 50% solids or higher. When it is controlled for maximum recovery, it is usually brought to a point near 20% solids.

Size of feed may be as coarse as 1/4-in., but 10-m. is a better maximum, and it is usual when using blankets in grinding circuits to screen to some such size, if possible. Coarse material requires steep slopes, and causes excessive blanket wear as well as lowered recovery.

Capacity depends upon service. When the blanket is depended upon for final recovery 0.2 to 0.5 tons per 24 hr. per sq. ft. of blanket is the usual range, depending upon the size of the gold. The same surface allowance should be made for careful scavenging of fine gold; in scavenging coarse gold after flotation 1 to 3 t.p.d. per sq. ft. may be run. For roughing out coarse gold, 2 to 4 t.p.d. per sq. ft. is usual, and 10 to 15 tons have been run.

Performance. At PASSAGEM MINE, Brazil (*20 IMM 18*), the ore is gold-bearing quartz containing heavy constituents deleterious in cyanidation. Blanket strakes take <30-m. stamp product in a pulp containing about 8% solids. Slope is 1.5 i.p.f. 200 tons of ore per 24 hr. are treated on 400 sq. ft. of blanket and each ton passes over 120 sq. ft. Recovery is about 50% and the ratio of concentration about 40 to 1. Concentrate assays about 10 oz. Au per ton. Blankets are 48 × 18 in. The life of a blanket is 3 weeks. The rough concentrate, amounting to 5 tons per 24 hr., is passed over 12 strakes, 18 in. wide × 20 ft. long, sloped 1.5 in. per ft., the first 8 and the last 4 ft. covered with blankets and the intermediate 8 ft. with canvas. Blankets are washed half-hourly. Concentrate assays about 160 oz. Au per ton and between 650 and 900 lb. per 24 hr. is produced from 5 tons of the rough concentrate. Tailing from this operation assays about 1.3 oz. Au per ton. The concentrate is further treated on two blanket strakes each 18 in. wide and 6 ft. long, producing between 65 and 90 lb. of final concentrate containing 48 to 64 oz. Au. Tailing assays 16 to 19 oz. Au per ton. This final washing requires about 3 hr., and about 16 g.p.m. of water per strake is used.

At OURO PRETO, Brazil (*20 IMM 30*), the ore is gold-bearing quartz containing considerable sulphides deleterious in cyanidation. Blanket strakes treat <30-m. stamp product in a pulp containing not more than 3% solids. Slope, 1.5 i.p.f. Blankets are 18 in. wide × 4 ft. long and are changed two to three times per hour, or as soon as the nap becomes loaded with concentrate; 32 blankets can be changed and washed in 10 min. Concentrate assays 8 to 9.6 oz. Au per ton and contains 40% sulphide. The ratio of concentration is about 40 to 1. The rough concentrate, amounting to about 5 tons per 24 hr., is reconcentrated on 6 strakes each 18 in. wide × 15 ft. long, sloped 1.5 i.p.f. Concentrate assays about 230 oz. Au per ton and tailing about 0.8 oz., all included gold. The ratio of concentration is about 26 to 1. This concentrate is next treated on a table covered with short-nap blanket, 12 ft. long, sloped 2 i.p.f. Concentrate assays 2,160 oz. Au per ton and tailing 16 oz.; ratio of concentration 10 to 1. This makes a final over-all ratio of concentration of about 10,000 to 1. Water used on the reconcentrating strakes is a weak solution of the extract from the leaf of *Solanum paniculatum*, a local saponin-bearing plant. This solution lowers the surface tension of the water and prevents or lessens flotation of metallic particles.

At DOME, 28 tables, 27 sq. ft. each, 1 3/8-in. slope, treat 1,500 t.p.d. primary ball-mill product, plus 2,000 tons circulating load. Two men change blankets on a 1 1/2-hr. cycle while a third washes; 40 min. is required for the actual change. There are 3 blankets per table. Life of blankets, 90 days aver. At PICKLE CROW (*41 CIMM 125*) classifier overflow at 100 *mog*, 170 t.p.d., is split into 6 streams each of which flows over a 2×11-ft. corduroy table. Slope is ± 2 1/2 i.p.f., adjusted to suit pulp density, and kept as low as possible without building up. The strip of corduroy at the top of each table is washed every 3 hr.; all others every 8 hr. Total concentrate, about 100 lb. per day with about 100 oz. Au.

At BRITANNIA (Sec. 2, Fig. 31) general mill tailing amounting to 5,500 t.p.d., 15 to 20% >65-m., 20% solids, assaying 0.005 oz. Au per ton, is run over 5,300 sq. ft. of English corduroy blanket (life 1 yr.) laid over 1/2×3/4-in. longitudinal wood strips on 1 1/4-in. centers in 27-in.×42-ft. launders sloping 1 in. per ft. Purpose of under-grid is to induce down-flow of water through blanket, which is thought to aid in saving gold. Concentrate assays 1.5 to 2 oz. Au per ton; recovery amounts to 6 oz. Au daily. Attendance is 4 to 5 man-shifts per day for 56 strakes. Clean-up (6 times daily) comprises switching feed from one section (of 7) to an adjacent section (or sections); washing the 8 strakes lightly with a small stream from a hose; throwing rubber flap valves at the ends of the strakes, which serve to divert concentrate; washing down with high-pressure water; throwing back flap valves, and turning feed in again (*Bul 342 CIMM 407*).

See also Sec. 2, Figs. 52, 78.

Recovery depends not only on the ore but also upon the purpose of the operation. With a free-milling ore, when traps (Art. 26) and blankets are the only gold savers, and operation is, consequently, adjusted primarily for high recovery, 80 to 90% of the gold in the ore can be and is saved by these means (*7015 IC 26; 50 #3 SAMEJ 11*). In roughing service, applied only when some of the gold is relatively coarse, 25 to 75% of the gold in the feed is the usual range. In scavenging, the recovery based on the mill feed depends entirely upon the character and efficiency of the treatment preceding; based on the feed to the blanket, it ranges, in general, from 50 to 75%, being higher, of course, the coarser the gold.

Cost of operation (exclusive of clean-up) is 1 to 5¢ per ton, depending upon the frequency of blanket change and the size of the plant. At DEMONSTRATION (*loc. cit.*) it was 1¢; average on the RAND is 2.8¢ (*37 #3 JCM 30*); WEST AUSTRALIA, 2¢.

Clean-up. Concentrate varies in richness from a few oz. per ton to as high as 1 oz. per lb. Low-grade concentrate is usually run up in grade by further tabling. Final clean-up of rich concentrate is made by barrel amalgamation (Sec. 14, Art. 8).

At UTAH COPPER the burlap is partially dried, burned in a stove, and the ash sent to the smelter. Low-grade concentrate generally is sacked (moist to prevent dusting) and shipped. Old cloth in all plants is burned; ash may be shipped, returned to the mill flow, or amalgamated, according to value.

Mechanical strakes of various kinds have had some use. A shaking form is used for platinum at POTGIETERSRUST, Transvaal (*IC 7085*). Gayford (*11Ω A 562*) shows a form in which the blanket is stretched over a head and tail rollers and is driven to bring concentrate continuously out of the feed zone into a washing zone. At MORRO VELHO, Brazil (*421 MM 202*), 3×12-ft. decks covered with coarse cotton duck are mounted to permit side tilt into a vertical position over concentrate launders. Feed cutoff, preliminary washing in place, tilt, wash-off of concentrate, and return to operation are effected automatically about once per $^1/_2$ hr. by a timer-operated carriage that travels on a track over a line of 18 tables set side by side. Concentrate passes to a second line of 18 tables, similarly operated.

Johnson rotary concentrator consists of a cylindrical steel tube, 12 ft. long by 3 ft. diameter, mounted with 6% slope on tires and rollers, and rotated 7 r.p.m. ($^1/_2$-hp. motor). The inside is lined with specially formed corrugated rubber. A deep, narrow launder, with the steepest possible pitch toward the discharge end, occupies the axis of the tube and receives concentrate washed into it by a longitudinal spray pipe above it. Another pipe sprays the material adhering to the lining as it rises out of the pulp stream entering the high end of the tube. Clean spray water is essential, since stoppage of any jet reduces efficiency of separation.

In an early test, a concentrator fed at 220 tons ore per day, in pulp containing 46% liquid, recovered concentrate amounting to 4% by weight and carrying 58% of the gold and 51% of the pyrite in the feed. As operating in the CASON mill in 1927, each of 10 concentrators, receiving its feed direct from a tube mill at 310.7 t.p.d. (of which 240.3 tons @ 4.974 dwt. Au and 2.38% pyrite was new feed), extracted 55% of the gold and 44% of the pyrite in the new feed as a concentrate (20.7 tons) averaging 31.74 dwt. Au and 12% pyrite. The concentrate sized: 15.5% on 60-m., 33.6% on 90-m., 26.4% on 200-m., and 24.5% below 200-m. On a monthly basis of 73,000 tons to the mill, introduction of the concentrators reduced the assay of sand tailings from 0.442 dwt. (in best previous year) to 0.283 dwt., and of total tailings (of which cyanided slimes constituted 56%) from 0.262 dwt. to 0.180 dwt. As an experiment, the 315-ton per day output of one tube mill was divided between two concentrators, with some improvement in recovery but notable enrichment in grade of concentrate (Au, 52 dwt.; pyrite, 23%).

35. CLASSIFIER SEPARATORS

Classifier separators are those which utilize free- or hindered-settling classification (Sec. 8) to make a rough separation between valuable mineral and waste in cases in which the valuable mineral has low unit value, and removal of a relatively high grade tailing suffices to lift concentrate to a salable grade.

Humphreys spiral concentrator (Fig. 85*a*) consists of a spiral curved-bottom launder *a* wound, at constant spiral diameter, around a vertical axis. When fed with a dilute deslimed pulp of a mixture of minerals of different specific gravities (*e.g.*, placer sands), the lighter minerals, being the more readily suspended by the impulse of the water, attain sufficiently greater tangential velocities than the nonsuspended heavier grains to cause them to climb toward the outer rim of the spiral trough. Similarly the coarser grains work toward the outer edge by a mechanism that is probably a combination of reverse classification in a stirred bed and of film sizing. As a result, after a short time, the heaviest mineral is progressing by saltation along the lowest part of the launder cross-section, while the gangue works along the outer sloping side. Concentrate (and middling) bleed-offs *b* are spaced along the bottom of the launder, somewhat toward the inner rim, and removable and adjustable splitters *c*, held in place by spring clips *f*, lead more or less of the concentrate stream toward the respective discharge outlets. Wash water is skimmed out of water channel *d* by adjustable pipes *e*, clipped onto the rim of the launder at desired locations, and set to withdraw the amounts of water wanted at the particular place. Volume of stream decreases toward the lower end of the spiral, owing to withdrawals with concentrate; as a result, carrying power becomes less and middling settles down to the lowest portion of the trough to be withdrawn. Final tailing discharges at the end of trough.

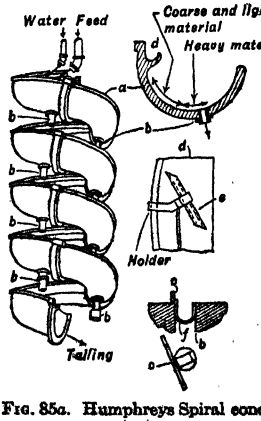

FIG. 85*a*. Humphreys Spiral concentrator.

Performance. At HUMPHREYS GOLD CORP., near Bandon, Oreg., four spirals, occupying a space some 20×20 ft., treat 1,000 t.p.d. of chromite-bearing gold-placer sand tailing, assaying 6% Cr_2O_3, making a recovery of 90% in a concentrate assaying 25% Cr_2O_3 (*144 # 10 J 68*).

Ainlay bowl is a bowl-shaped basin 12- to 36-in. diameter at the rim, rubber-riffled on the inner surface, mounted rim upward on a vertical shaft driven to give about 1,000 f.p.m. peripheral speed at the bowl rim. Placer sand and fine gravel are fed with water around the shaft; centrifugal force causes a film of pulp to travel upward toward the bowl periphery; gold catches between the riffles, and the overlying lighter sand passes on upward and over the rim. When the riffles fill up with gold and heavy sand, feed is shut off and the concentrate is washed out. CAPACITIES claimed by the manufacturer are 1/2 to 1 1/2 cyd. of <5-m. gravel per hr. for the 12-in. bowl and 5 to 10 cyd. of <3/8-in. material per hr. for the 36-in. size. The apparatus has been used to a limited extent on doodlebugs and small placers operations (L. D. Drake, *PC*).

Vertical-current washer is essentially a hydraulic classifier. The machine is satisfactory when used in easy service, such as the separation of clay and fine sand from lump iron ore; or because the amount of cleaning to be done is relatively small, as in the removal of slate from sized coal in the Draper washer (*Ed. 1*).

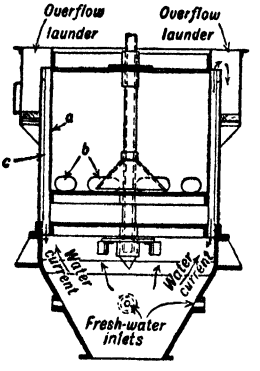

FIG. 86. Wetherbee concentrator for wash iron ores.

Wetherbee iron-ore concentrator (Fig. 86) combines mechanical agitation with free-settling hydraulic classification to effect separation of fine silica and clayey material from coarse and fine hematite in Mesabi wash ores. It is a direct competitor of the log and turbo washers (Sec. 10, Art. 4). Feed passing a 1/2-in. aperture is introduced into the revolving tub *a* and discharged by centrifugal force through the holes *b* into annular space *c* through which a current of water is rising. The theory of the machine is that the swirl in this annular space is sufficient to keep the lighter particles in suspension and that consequently a small rising current will lift them into the overflow, while the heavier particles will settle into the hopper-shaped bottom from which they may be removed by a drag or screw conveyor, or, if sufficiently fine, by a pipe-and-plug spigot.

Machines 3 ft. and 6 ft. in diameter have been used. Working on one particular ore, 28 r.p.m. for the 6-ft. machine and 36 r.p.m. for the 3-ft. machine were found to be the best speeds, and hydraulic water consumption was from 80 to 150 g.p.m. The 6-ft. machine readily treated 50 tons <1/2-in. feed per hr. and produced concentrate assaying 57 to 62% Fe from feeds carrying 39 to 54% Fe. Comparative results on two Mesabi mills, one using the Wetherbee machine and the other a turbo washer and tables to treat log-washer tailing, showed 81.4% recovery with a concentrate assaying 59.8% Fe for the first mill and 78.6% recovery with 58.8% Fe in the concentrate for the other (*103 J 301*).

Mechanical classifiers are used as wash-type concentrators for sandy feeds, particularly in iron-ore concentration. See Sec. 10; also Sec. 2, Fig. 84.

PNEUMATIC CONCENTRATORS

Pneumatic concentrators are those in which a gas, invariably air, is used to effect differential movement of particles of different specific gravities. They parallel the water-gravity concentrators in that beds, quicksands, and the direct impulse of air on feed particles are all utilized.

36. BED-TYPE PNEUMATIC CONCENTRATORS

This group is made up of those machines in which separation is effected by differences in settling rates of particles in a pulsated bed of which they themselves are parts. The group includes all of the pneumatic machines best known and most used. The essential elements in all are a porous supporting surface for a mass of grains; an air supply flowing upward through the supporting surface and thence through the interstices of the mass of grains; means to produce flow of the mass of grains and to constrain layers at different vertical depths therein to move in different directions to different discharge points. These are the essential elements of a water jig, except for the difference in interstitial medium. The kind of stratification effected, with large, heavy material of a given specific gravity at the bottom of the layer of that material, is the same in both machines; the responses to controls are, of course, also the same. In other words, these apparatus, though having the general form and appearance of shaking tables used for water-gravity concentration, and called PNEUMATIC TABLES, are actually pneumatic jigs.

Types of tables differ in the methods of effecting intermittent dilation of the bed, and in the means of causing and controlling flow of the different strata.

Hooper pneumatic jig (Fig. 87) utilizes a pulsating air current to dilate the bed and gravity to move both upper and lower layers down-slope, guided along divergent paths

by suitable baffles. Deck *a*, covered with broadcloth or other porous material supported on slots *b*, and adjustable as to longitudinal inclination, is otherwise stationary. Above the broadcloth are two sets of metal riffles, which act as the guides above mentioned; the lower set, 1/4 in. high and spaced 1 in. run toward one side of the deck, while the upper set, 3 1/2 in. high and spaced 3/4 in., run toward the other side. Air is caused to pulsate through the porous deck by pulsation of a leather diaphragm *d*, actuated by eccentrics on drive shaft *e*, the diaphragm being fitted with upward-opening flap valves. The original bed, comprising the mixed feed, stratifies roughly near the feed end; during the balance of the travel, stratification is perfected by flotation of lighter material from the lower layer and gradual acceptance of heavy material from the upper layer. The primary split between upper and lower layers is by a horizontal splitter at the discharge end located at the top of the lower riffles; secondary splits are possible with each stream by use of vertical splitter blades.

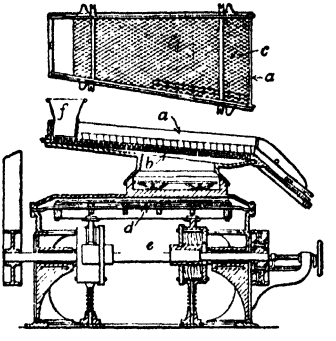

FIG. 87. Hooper pneumatic jig.

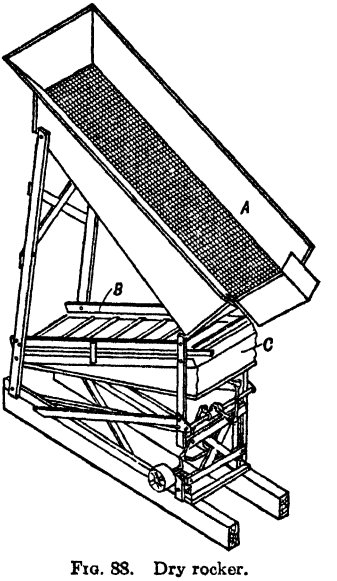

FIG. 88. Dry rocker.

Dry rocker (Fig. 88) may be used where water is scarce (*IC 6786*). Gravel must be completely dry and disintegrated. The essential elements are a steeply inclined screen *A* and a riffle box *B* with porous bottom through which air is forced in powerful blasts from bellows *C*. Screen aperture is 3/8- to 1/2-in. Undersize runs to the head of the riffle box, sloped 5 to 6 i.p.f. (more in a hand-operated machine). The porous surface is about 8 oz. single-weave duck over copper fly screen. Other porous materials such as silk and rayon concentrate well, but permit excessive entry of dust into the bellows. Bellows sides are tight 36-oz. duck. Riffles are arranged to maintain a lively bed deep enough to protect settled gold. A power machine 11 in. wide by 40 in. long driven 250 @ 3-in. s.p.m. by a 3/4-hp. gas engine had a capacity of 0.8 cyd. per hr. Hand machines have about the same capacity as a rocker of corresponding size. Clean-up is made by wet panning, if water is available; otherwise rough concentrate is collected and re-run to high enough grade for shipment.

"Air-float" table (Fig. 89) effects dilation by a combination of the throwing action of a shaking deck and a continuous stream of air upward through the deck; transport of the lower layer is due to the motion and the restraint of longitudinal riffles; transport of the upper layer is largely gravitational, modified by the effect of table shake. The machine comprises a trapezoidal riffled deck *a*, forming the top of a shallow air box *b*, tiltably mounted on inclined spring supports *c*, reciprocated longitudinally by an eccentric, and connected by a flexible air pipe with a blower located in the box support *d*. The deck consists of a cellular metal gridwork, with diamond-shaped cells about 2 1/2 in. on an edge, carried on the trapezoidal deck box, itself carrying wooden nailing plugs for the riffles, and supporting a perforated cover on top of which the riffles are nailed, parallel to side rail *e*. Head rail *f* forms right angles with the two side rails; the fourth rail makes an acute angle with *e* and joins with the back side rail at about the third-point from the feed corner *g*. Riffles taper, on tables meant for 3/8-in. maximum feed, from 1/2 in. at rail *f* to a feather

along the diagonal. The cells beneath the deck are fitted with bottom dampers, adjustable as to tilt, which permit regulation of the amount of air admitted to each cell. A crowding plate *h*, variously conformed to suit the designer's idea for a particular job, is fastened along the diagonal and back sides of the deck, and extends also along the feed end. Deck motion is Ferraris type (Art. 16). Longitudinal slope against the travel and side slope with the travel are both adjustable, as are also speed, stroke length, and volume of air. Standard deck size is 40×60 in. Capacity of such a table on fluorspar-quartz separation is said by Jarman (*PC*) to be 5 t.p.h. on 8~20-m. feed and 7 t.p.h. on $^3/_8$~$^1/_4$-in. Motor for the same table is 15-hp.

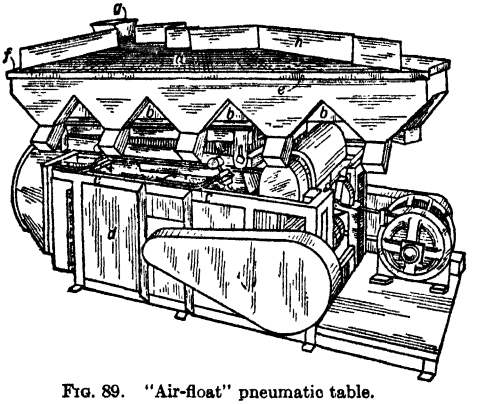

FIG. 89. "Air-float" pneumatic table.

Operation of pneumatic tables involves control of feed, fluidity of bed, and time-factor. The general principles are the same as those already elaborated for jigging with water (Art. 2).

Feed size for minerals of 2.6 sp. gr. and heavier ranges from $^3/_8$-in. to about 65-m.; performances on grains outside this range are not satisfactory. Feeds should be short-range. Practice is not to exceed three $\sqrt{2}$ steps (= 2.8 ratio of diameters) and most work is at one or two such steps. Manufacturers' representatives say that the ratio may equal the ratio of specific gravities of the minerals to be separated (= concentration criterion, air basis), but since the necessary separation is between pure mineral and an allowable middling, calculation of the criterion and allowable size range gives a lower result. The fact is that the greatest practicable uniformity in feed-particle size is necessary as an operating factor. A long feed-size range tends to produce nonuniform resistance to air over short distances on the deck, with the result that blowouts occur at the areas of least resistance and the surrounding areas become dead. Blowouts recurring in a given area can be corrected in the Air-float table by suitable adjustment of under-deck dampers, but this adjustment does not take care of the local blowouts due to unequal distributions of fine particles.

Fluidity of bed depends upon size of feed, air flow, and shake. The best operating condition is one in which the bed is kept so fluid that effective density is low, which may be judged by the distance from the feed corner at which the great bulk of the heaviest particles in the feed have reached the deck. With a concentration criterion of 1.35 to 1.4, this should be a few inches only. Fluidity may be and is lower with coarse feeds than with fine, because of the greater capacity to penetrate possessed by the large particles. On the other hand, the coarse bed becomes nonpenetrable much more suddenly than the fine, and fluidity must be carried further above the operating minimum.

Fluidity is adjustable by changes in air flow, stroke length, speed, longitudinal tilt, and feed rate. Air flow is the easiest operating adjustment. But increase in stroke length and/or speed lighten the bed more cheaply, since air accounts for about 80% of total power consumption. Increase in longitudinal tilt against the load and increase in feed rate both thicken the layer on the table and decrease fluidity, unless concomitant changes are made to maintain it. Too great fluidity throws settled material over its sustaining riffle cleat down-slope.

Time-factor must be sufficient to permit the lightest particle of middling that it is desired to reject to get behind a riffle cleat before the upper layer reaches the discharge edge. Similarly, heavy concentrate must be held back until it has floated out the heaviest piece of reject-grade middling. Time-factor is controlled by feed rate and by the flow rates of the primary (top and bottom) strata. Fluidity affects flow rate of the top stratum, which is also affected by side slope. Flow rate of the bottom stratum is controlled by speed and by longitudinal tilt. A high rate of longitudinal flow with low fluidity tends to drag the top stratum toward the diagonal.

Extensive tests on the effects of operating variables on pneumatic-table operation were made at Columbia University (*87 A 155*). The general findings are summarized above, but the details should be consulted.

Applicability. Manufacturers' representatives assert that the air table will make separations between minerals when the specific gravity difference is 10% (Jarman, *Feb. meeting AIME. 1941*). This

corresponds to a concentration criterion, air base, of 1.1. Assuming quarts as the gangue mineral and percentage base, it would mean that separation could be made from a mineral of 2.91 sp. gr. No data concerning such separations are published, but enrichment of crude fluorspar contaminated with quarts and calcite, with respect to both minerals, as shown in Table 101, is cited by Jarman (*loc. cit.*). This

Table 101. Concentration of 8/20-m. crude fluorite by pneumatic tabling at Big Creek Fluorspar Co. (*After Jarman*)

	Assays, %			
	CaF_2	SiO_2	$CaCO_3$	R_2O_3 *a*
Feed	53.8	17.0	27.6	1.5
Concentrates *b*	89.8–90.5	2.5–5.1	0.3–1.0	3.6–7.4
Tailings *b*	14.5–37.8	24.5–46.3	31.5–36.3	1.4–4.9

a Contains considerable galena and sphalerite.
b Extremes of three analyses.

separation has a concentration criterion, air base, of 1.13 to 1.21 as against quarts, and 1.11 to 1.18 as against calcite. Jarman (*A TP 959*) cites results of an operation on a pneumatic table at COLUMBIA TUNGSTEN Co., Quesnel, B. C., treating 18~30-m. scheelite: Feed assayed 2.9% WO_3; concentrate, 64%; and ratio of concentration was 22.8; from which tailing calculates 0.92% WO_3, and recovery 70%. Concentrate contained pyrite and galena, which were not further separable except by very close sizing and careful treatment. Jarman (*ibid.*) further cites use of the table on rutile-zircon magnetic concentrate, separation of pyrrhotite from actinolite, volcanic ash from obsidian, asbestos from sand, mica from quartz and feldspar, garnet from kyanite, galena from blende, gold and black sands from placer sands, inert from active fuller's earth. He states (*PC*) that sizable commercial operations are recovering cassiterite and mica from pegmatite minerals; pyrrhotite from rocky gangue, pyrite from rutile, ferro-alloys from slags and are grading closely sized abrasive grains by shape. No performance data are available for judging any of these operations. Garnet (almandite) has been separated from hornblende at NORTH RIVER GARNET Co. (*Ed. 1, 117*) for many years; sizes treated were 30~40, 40~52-, and 52~68-m.

Coal separation. There is considerable commercial use of pneumatic tables in coal separation.

Screen table, used for separation of asbestos (Sec. 3, Art. 2) is a shaking screen, about 6 (wide) ×20-ft., covered with about 1/16-in. cloth, with several fantail suction hoods (Fig. 90) or aspirators

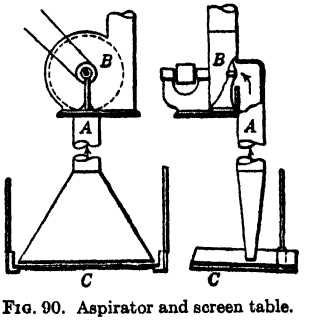

FIG. 90. Aspirator and screen table.

suspended with lips close to the surface of the bed. The screens are shaken about 300 r.p.m. The bed leaves the cloth, owing to Ferraris suspension (Art. 16), and in settling back undergoes reverse classification (Art. 1). The fibrous asbestos, both because of its acicular shape and its lightness, floats to the surface and is picked up as it passes under the aspirators. A 20-ft. screen is normally broken by 1 or 2 drops to turn over the bed and thus uncover buried fiber.

Stratification on this table resembles that on wet shaking tables rather than that of the pneumatic table.

37. PNEUMATIC QUICKSAND

A pneumatic quicksand may be formed by blowing air through a finely porous diaphragm into a relatively deep box of fine sand (*e.g.*, <20-m. siliceous river sand). With such material an air pressure of 1 1/2 to 3 in. Hg, sufficient to cause dilation without boiling, produces a spindle-hydrometer density of 1.45. This corresponds to an interstitial volume of 44%, or 15 to 20% dilation. Such a quicksand floats bituminous coal (*A PreP 1561-F*), and permits slate and pyrite to sink. Flotation of the coal is due to the fact that at this dilation, dry, the effective density of the quicksand is well above the composite density.

38. BLOWING

Blowing (sometimes called DRY PANNING) involves direct impulse of a stream of air across a stream of free-falling particles and across a 1-grain-deep layer of particles supported on a smooth plane surface. Effectiveness is greater the shorter the size range treated and the greater the differences in specific gravity.

Blowing (WINNOWING) was used at the MINERALS RESEARCH LABORATORY, Univ. of Witwatersrand (*40 JCM 218*), to separate vermiculite from rocky gangue minerals. The material was crushed dry and closely sized (about 2 @ $\sqrt{2}$ steps) and then dropped in a sheet across a blast of air from a blower in a box expanding with the run. The material piled on the catching surface varied from tailing to gradually richer middling at increasing distances from the feed point. Middling could be separated by recrushing in rolls or a slow hammer mill and then rescreening or reblowing. Roll crushing reduced the gangue but did not affect the vermiculite greatly; the hammer mill light blows cleaved the vermiculite but did not break the gangue. Uniform feeding was essential to effective blowing. The laboratory estimate was that a flowsheet utilizing such a combination of treatments would recover 85% of the vermiculite in sizes $>1/64$-in.

Dry panning is practiced with two gold pans. The gravel, roughed down as far as possible by screening, is placed in one pan and held chest-high above the other in such a position that a strong current of air will blow across a stream dropped slowly, well-scattered, from upper to lower pan. Deflection of the lighter particles in falling is used to cause them to fall outside the lower pan. This procedure is repeated, with hand picking to aid in removing coarse waste, until a rough concentrate remains. This is further enriched (in gold panning) by magnetic concentration for removal of magnetite. The residue is then spread one grain deep in one pan and, holding the pan chin-high, is blown gently. The larger and lighter pieces tend to roll away from the smaller and heavier.

The operation is slow, laborious, and very uncertain.

SECTION 12

FLOTATION

ART.		PAGE
1.	Introduction	01
2.	History of flotation	02
	COLLECTION	
3.	Principles of collection	03
4.	Anionic collectors	07
5.	Cationic collectors	14
6.	Oily collectors	18
	CONDITIONING	
7.	Activation	20
8.	Depression	23
9.	Protection	25
10.	Conditioning agents	25
	LEVITATION	
11.	Bubble attachment	37
12.	Frothing	40
13.	Frothing agents	42
	FLOTATION MACHINES AND PROCESSES	
14.	Bulk-oil flotation	49
15.	Granulation	49
16.	Murex process	50
17.	Greased-surface concentrators	50
18.	Skin flotation	50
	FROTH FLOTATION	
19.	Mechanism of froth flotation	52
20.	Blanket-type pneumatic machines	55
21.	Air-lift machines (matless cells)	58
22.	Cascade machines	61
23.	Subaeration machines	63
24.	Boiling process	73
25.	Chemical-generation process	73
26.	Vacuum process	74
27.	Agitation-froth machines	75
28.	Combination machines	77
29.	Design of flotation machines	78
30.	Table flotation	82
	OPERATION	
31.	Ore	84
32.	Water supply	85
33.	Reagents	86
34.	Reagent feeding	88
35.	Size of feed	92
36.	Time-factor	97
37.	Pulp density	98
38.	Temperature	99
39.	Equipment	99
40.	Constant conditions	100
41.	Cleaning	100
42.	Flocculation	101
43.	Attendance	101
44.	Cost	101
	FLOTATION FLOWSHEETS	
45.	Flowsheet types	103
	SULPHIDE FLOTATION	
46.	Single-sulphide flotation	108
47.	Differential flotation	112
48.	Bulk differential *vs.* straight selective flotation	116
	FLOTATION OF NON-SULPHIDES	
49.	Native metals	117
50.	Oxides	119
51.	Heavy-metal oxide salts	120
52.	Nonsilicate minerals of alkali and earth metals	122
53.	Silicate minerals	125
54.	Inert minerals	129

1. INTRODUCTION

Flotation is a method of concentrating solid minerals in a relatively finely divided state. It is essentially a method of gravity concentration in water in which the effective specific gravity of certain of the ore minerals is substantially decreased by causing air bubbles to attach more or less tenaciously to particles of that particular mineral, whereupon they float on the separating medium while the unaffected minerals sink. The lightening may be insufficient to cause actual buoying to the surface but yet enough to cause differential travel in a gravity separator such as a shaking table or hydraulic classifier. When the selected mineral is separated in the form of a froth the operation is called FROTH FLOTATION. This is the usual method. When the degree of levitation is insufficient to cause the particle-bubble aggregates to float, the method is variously called AGGLOMERATE TABLING, OIL-AIR SEPARATION, and TABLE FLOTATION, which last name will be used herein.

Steps of froth-flotation method. In essential outline the ordinary simple froth-flotation operation comprises the following steps: (1) Grinding the ore in water to a maximum size of 35- or 48-m.; (2) dilution to a pulp consistency of 15 to 35% solids; (3) addition to the pulp of small quantities of one or more various inorganic conditioning agents, which have a

number of functions (Arts. 7, 8, and 9); (4) addition of a collector reagent (Art. 3), which has the function of coating the mineral to be floated with a water-repellent film; (5) addition of a frothing agent (Art. 13), which imparts persistence to bubbles when they reach the surface; (6) aeration either by agitation, or by air injection as through the porous bottom of the containing tank, or through pipes (Art. 11), during which the coated mineral particles become more or less firmly attached to gas bubbles; (7) separation of mineral-bearing froth from a liquid pulp containing residual particles which did not take on collector coatings. These steps frequently follow the sequence stated, but the conditioning agent, and sometimes the collector too, may be added to the grinding mill; dilution is usually effected in the classifier; the frothing agent may be added in the flotation machine where aeration is going on, or it may be added in the classifier or even in the ball mill.

Applicability. It is probably safe to say that if two minerals differ to the extent that one contains a substantial amount of a particular metallic element or acid ion which is absent in the other, the two may be separated by flotation. This is not to imply that the methods for all such separations are already known, but that this is the known essential difference present in all separations now practiced, and that each new separation that is worked out is explicable on this basis. At present any sulphide can be separated from the usual rocky gangues; differential flotation of sulphides has been substantially controlled; the oxidized heavy-metal minerals and the rocky minerals of the non-silicate series can be separated from each other and from the silicate minerals; coal, graphite, and sulphur are readily separable from the rock-forming minerals; quartz and certain other silicates can be floated in the presence of metallic oxides and of mineral salts of the alkaline earths; soluble chlorides can be separated from associated clays and from each other; and new achievements are listed at frequent intervals.

Flotation as a means of separation is also beginning to be widely investigated and somewhat less widely applied in manufacturing, usually for reclamation of the values in fine wastes, but in some cases for purification of manufactured products. The following bibliography on such uses is selected from an article presented by Patek (*AIME, Feb. meeting, 1941*).

1. Flotation as applied to the chemical industry, CULLEN and LAVERS, *14 ICE 26*.
2. Fundamental properties of textile wastes, IV, Flotation, CLANTON, *8 Text. Research 270;* VIII, Flotation of colloidal suspensions, MAGOFFIN and CLANTON, *8 Text Research 557*.
3. Removal of sulphur-black dye from suspension by flotation methods, CLANTON, CAMERON, and MAGOFFIN, *10 Text. Research 201*
4. Behavior of textile fibers toward cationic soaps, BLOW, *57 SCI 118*.
5. Wastes problems in the non-ferrous smelting industry, SWAIN, *31 IEC 1358*.
6. Separating colloids from liquids by flotation, *Brit pat 231, 430/1924*.
7. Chemistry of the Thylox gas-purification process, GOLLMAR, *26 IEC 130*.
8. A flotation method for treating white water, ANSPACH, *104 #9 Paper Trade Jour. 40*.
9. Separation of seeds by froth flotation, *U. S. pat. 2,155,219*.
10. Bromine recovery, *U. S. pat. 1,662,505*.
11. Recovery of silver from spent photographic solutions, *U. S. pat. 2,205,792; 2,221,163*.

Size treated. Flotation is practiced in the grain-size range from, say, 1/8- or 3/16-in. to colloidal. In froth flotation particles coarser than 65-m., particularly if of high specific gravity, tend to drop from the levitating bubbles, and losses also increase rapidly in the finest size range. Coal and other minerals of low specific gravity and flaky minerals such as graphite, mica, and talc can be froth-floated at sizes up to 10-m. Table flotation will handle granular material up to the maximum size stated above, but fails for fine sizes.

2. HISTORY OF FLOTATION

The fact that water can be displaced preferentially by certain oils at the surfaces of certain mineral particles brought to the interface between the two liquids has been known for many years. Utilization of the fact runs back into antiquity, if we may thus interpret the tales of the Golden Fleece, and of the pitch-daubed feathers in the hands of the Greek virgins. Modern recognition of the phenomenon of selective cling of certain solids at the interface between oil and water is first recorded in a patent to Haynes (*Brit. pat. 488/1860*). The converse phenomenon, *viz.*, selective oil-coating of certain particles in an aqueous ore pulp when relatively minor amounts of oil were stirred in was utilized by the Bessels in 1877. Their patents (*Ger. pat. 42/1877; Ger. pat. 39,369/1887*) for the froth flotation of graphite specify almost all conceivable kinds of oils and a variety of other organic compounds as reagents; they generated gas bubbles in the pulp by boiling and/or by chemical reaction, and floated the graphite as a froth.

Subsequent landmarks in the development of modern flotation practice are Everson (*U. S. pat. 548,187/1895*), who described the use of sulphonated fatty oil as well as hydrocarbons, with inorganic

acids, and introduction of air by agitation to effect levitation of metalliferous sulphides and oxides; Elmore (*Brit. pat. 13,579/1904* and *U. S. pat. 826,411/1906*), who described supplying the gas for bubbles by electrolysis and by vacuum respectively; Sulman and Picard (*U. S. pat. 795,808/1906*), who pumped air into an oiled pulp through a perforated submerged pipe; Sulman, Picard, and Ballot (*U. S. pat. 835,120/1906*), who prescribed beating in air by violent agitation in conjunction with the use of minute quantities of fatty oil; Towne and Flinn (*U. S. pat. 1,295,817/1919*) and Callow (*U. S. pat. 1,141,377/1915*), who described introduction of air through a porous medium underlying the pulp; Martin (1915), working in the laboratory of Utah Copper Co., who discovered the utility of the soluble sulphydrates as collectors for metalliferous minerals, the knowledge being buried in the company archives for nearly 10 yr; Christensen (*U. S. pat. 1,467,354/1923*), who changed the horizon of separation from that of metalliferous minerals from all others to non-silicates from silicates; Perkins and Sayre (*U. S. pat. 1,364,307/1921*), who described generally the use of soluble organic non-frothing reagents for selective modification of the surfaces of the minerals to be floated; Sheridan and Griswold (*U. S. pat. 1,427,235/1922*), who disclosed specifically the use of cyanide to prevent flotation of sphalerite in the presence of galena, and who indirectly pointed the way to understanding of activation and depression; Forrester (*U. S. pat. 1,646,019/1925*), who introduced matless cells into the mills; and several inventors who describe the use of cationic collectors for silicates.

PRINCIPLES OF FLOTATION

A flotation machine and its contents, in continuous operation, comprise a system in a rough sort of dynamic and chemical equilibrium. Into this system ore, water, air, and a variety of chemicals in small quantities are introduced continuously; from it flow continuously two or more streams of products which differ obviously in physical state and somewhat less apparently in chemical composition. The overflow stream is usually a froth carrying a load of solid which is different in mineralogical character from that of the other product streams and of the feed stream; the underflows are suspensions of the residue of the feed solid in the balance of the feed water. Determination of the distribution of the added chemicals in these product streams has been the key to the understanding and control of the process. From such study it has developed that the added reagents have a variety of functions. These have been assigned descriptive names as follows:

COLLECTION is a selective change in the surface of one mineral species or genus present in the ore, as a result of which the changed mineral is rendered water repellent, the other mineral species present remaining unaffected and water-wet. Reagents which effect collection are called COLLECTORS, COLLECTING AGENTS, and, less frequently, PROMOTERS.

CONDITIONING comprises changes in mineral surfaces and in the composition of the aqueous solution. Such changes in surface as aid collection of the changed particle are called ACTIVATION; surface changes that prevent collection are called DEPRESSION; changes in the solution which do not at the same time effect changes in particle surfaces are usually designed to protect other reagents and are, therefore, called PROTECTION. Other treatments of the flotation pulp such as heating, desliming, dewatering, *etc.*, which contribute to the success of flotation, are also usually classed under the head of conditioning.

LEVITATION is the act of lightening collector-coated particles by causing them to become attached to air bubbles. By extension the term is also applied to flotation at the upper surface of the suspending medium, and to attachment to droplets of a liquid lighter than and immiscible with the suspending liquid.

FROTHING is the act of producing a collection of bubbles (FROTH) at the surface of the suspending medium. It is usually implied that the froth carries a load of levitated solid.

COLLECTION

Collection is performed for the purpose of producing selective water-repellent coatings on the mineral particles which are to be separated from the pulp, in order that gas bubbles may cling to these particles. The coatings are of hydrocarbon or hydrocarbonlike nature. In the simplest case all that is necessary to effect collection is to add to the pulp a small amount of one of a certain class of organic chemicals (COLLECTORS), and to agitate the mixture long enough to effect thorough dispersion and permit the desired chemical reaction. If the pulp contains substances that interfere with the reaction, or lacks other substances that facilitate it, remedial treatment is required (see Art. 4).

3. PRINCIPLES OF COLLECTION

Many theories seeking to explain selective coating of mineral particles have been put forward. The following bibliography is representative. The hypothesis followed in this section was implied in the Christensen patent (*U. S. pat. 1,467,354*), was formulated in

definite terms on the basis of work done at Columbia University, and the factual basis therefor has been extensively checked both at Columbia and elsewhere. Much of the recent dissenting theory reduces, on its face, to a question of terminology; none of the basic facts is seriously in dispute.

Understanding of the theory is essential to intelligent design and control of operation. For that reason a considerable part of the experimental foundation is given herein.

Bibliography on Theory of Collection

1. Experiments with flotation reagents, TAGGART, TAYLOR, and INCE, *87 A 285*.
2. Chemical reactions in flotation, TAGGART, TAYLOR, and KNOLL, *87 A 217*.
3. Action of alkali xanthates on galena, TAYLOR and KNOLL, *112 A 382*.
4. The case for the chemical theory of flotation, TAGGART, DEL GIUDICE, and ZIEHL, *112 A 348*.
5. Oil-air separation of non-sulphide and non-metal minerals, TAGGART, DEL GIUDICE, SADLER, and HASSIALIS, *134 A 180*.
6. Oxygen-free flotation, RAVITZ and PORTER, *A TP 513; RAVITZ, 153 A 528*.
7. Adsorption of copper sulphate by sphalerite, RAVITZ and WALL, *38 JPC 13*.
8. Adsorption of potassium xanthate by galena in oxygen-free atmosphere, KNOLL and BAKER, *A TP 1313*.
9. Principles of flotation, I. W. WARK, Australian Inst. of Mining and Metallurgy, Melbourne (1938).
10. Principles of flotation: I, An experimental study of the effects of xanthates on contact angles at mineral surfaces, WARK and COX, *112 A 189*.
11. The nature of the adsorption of the soluble collectors, COX and WARK, *37 JPC 797*.
12. Principles of flotation: V, Conception of adsorption applied to flotation reagents, WARK and COX, *134 A 26*.
13. Flotation, A. M. GAUDIN; McGraw-Hill Book Co., New York (1932).
14. Surface actions of some sulphur-bearing organic compounds, GAUDIN and WILKINSON, *37 JPC 833*.
15. Hypothesis for the non-flotation of sulphide minerals of near-colloidal size, GAUDIN and MALOZEMOFF, *112 A 305*.
16. Reactions of xanthates with sulphide minerals, GAUDIN, DEWEY, DUNCAN, JOHNSON, and TANGEL, *112 A 319*.
17. Principles of mineral dressing, A. M. GAUDIN, McGraw-Hill Book Co., New York (1939).
18. The mechanism of collection of metals and metallic sulphides by amines and amine salts, ARBITER, KELLOGG, and TAGGART, *153 A 517*.
19. Collector coatings in soap flotation, TAGGART and ARBITER, *153 A 500*.
20. Chemistry of collection of nonmetallic minerals by amine-type collectors, TAGGART and ARBITER, *A TP 1685*.

Chemical theory of collection was first formulated (*87 A 217*) as follows: "*All dissolved reagents which, in flotation pulps, either by action on the to-be-floated or on the not-to-be-floated particles affect their floatability, function by reason of chemical reactions of well recognized types between the reagent and the particle affected.*" This generalization applies not only to the action of the organic collectors themselves, but also to activators and depressants, in so far as the action of these is directly on the particles affected by their presence and not simply on the pulp atmosphere.

Much of the experimental work was done on galena but enough parallel work on other minerals has been done to demonstrate that the behavior of galena is typical and that conclusions founded on the action of this mineral are broadly applicable.

Experimental Basis for Chemical Theory of Collection

Solubility of minerals. Most minerals are appreciably soluble in water.

A distilled-water extract of an ore, representing a leach of only a few minutes' duration, corresponding to the time that an ore is in contact with water prior to flotation in a mill, contains readily determinate concentrations of most of the principal ions present in the ore, or of ions derivable therefrom by oxidation.

Oxidation of sulphides in grinding. When galena is wet ground in a pulp in contact with air the new surface of galena thus produced oxidizes almost immediately and a surface coating of oxidized products, comprising sulphates and lower sulphoxides and carbonates of lead, forms. In part this dissolves, but a part adheres to the particle surfaces.

Equilibrium between dissolved and undissolved is established at lower concentrations in solution than with the corresponding substances in bulk. This indicates that the surface layers are of lower solubility than masses of the same chemical composition and leads to the hypothesis that the retained oxidation films are so thin—probably substantially monomolecular—that they are essentially parts of the original galena lattice, that the oxidized ions are bound to that lattice by forces intermediate between the attraction of the sulphide for the lead ions of the galena mass and that of the oxidized ions

for lead in their respective massive crystalline states. Similar oxidation occurs with other sulphides to such an extent in high-sulphide ores that the oxygen content of flotation-feed water may be as low as 20% of that of the mill water (*87 A 369*).

Ion exchange. Leaching of minerals with collector solutions results invariably in exchange of collector ions with mineral-surface ions, evidenced by diminution in concentration of collector ion in the leach solution and stoichiometric increase in concentration therein of mineral-surface ions of the same charge.

OLEATE ion is abstracted from dilute aqueous solutions of alkaline oleates by apatite, phosphate ion appearing in solution, and by calcite, with return of carbonate ion; ethyl xanthate solutions leach sulphate, reduced sulphur-oxygen ions and carbonate from galena, giving up xanthate; soap solutions do the same, losing oleate; pyrite, chalcopyrite, chalcocite, malachite, and metallic copper all remove xanthate ion, the sulphides returning sulphate ion. Other ions and stoichiometric balances have not been determined for these latter minerals. When the mineral is of oxide type, *e.g.*, quartz, activated by a heavy or earth-metal ion, the coating salt appears to be dibasic, *i.e.*, $HSiO_2 \cdot C_{17}H_{33}COO \cdot Ba$ (*153 A 462*).

One implication of the increase in sulphate ion in xanthate-leach solution on copper sulphides is that even the highly soluble sulphate of copper obeys the previously stated hypothesis concerning the low solubility of surface coatings.

Nature of collector films. The film is a reaction compound.

When powdered galena that has been leached with ethyl xanthate solution is thereafter leached with hot ethyl alcohol, lead ethyl xanthate can be crystallized from the alcohol, the conditions of the experiment being such as to preclude the possibility that lead xanthate precipitated by lead ion in the xanthate-leach solution was the source of the lead xanthate recovered in the alcohol.

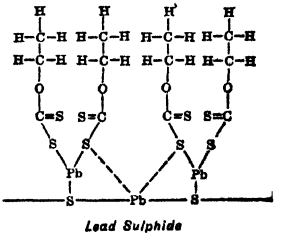

FIG. 1. Lead ethyl xanthate collector film on galena.

Orientation. The collector films are oriented in the fashion pictured in Fig. 1.

Diphenyl thiourea (thiocarbanilid) is a collector for galena and is abstracted by it from aqueous solution. The reaction probably involves displacement of the hydrogen from the acidic tautomer

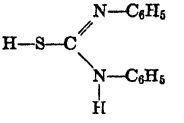

Dihydroxy diphenyl thiourea is similarly extracted by galena, but is not a collector. It differs from

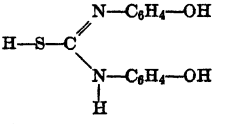

thiocarbanilid only in that a hydrogen in *para* position to the urea group on the phenyl has been substituted by hydroxyl. Experience teaches that such substitution tends to induce water solubility, *i.e.*, wetting of the substituted molecule by water (*cf.* the solubility of phenol homologs with the corresponding benzene series). The inference is that the lead thiourea coatings are oriented with the phenyl groups outward. Taylor and Knoll (*112 A 394*) obtained similar results with a glycol xanthate analogous to ethyl xanthate and having, presumably, the formula $HO \cdot C_2H_4O \cdot CS \cdot SNa$. Substantiation is found in the fact that heavily oxidized galena (or cerussite), when treated with xanthate solution to the extent that visible crystalline surfaces of lead xanthate are formed, is not water repellent. The xanthate groupings in crystalline lead xanthate are, presumably, arranged like those in organic crystals generally (see *Wyckoff*), *i.e.*, with the organic group arranged in right hand-*left* hand order, and not like-oriented as in Fig. 1.

Further confirmation of like-orientation in surface coatings lies in contact-angle studies (Sec. 19, Art. 22). Contact angles at collector-coated surfaces depend, with a given active group, upon the hydrocarbon radical of the collector used, and upon this alone. All minerals capable of activation by ethyl xanthate, with or without activation, show the characteristic angle (60°). The ethyl group in anionic collectors with sulphydric links other than xanthates also gives a 60° angle. Higher xanthates give larger contact angles. Since the behavior of the coated surface is the same with the same hydrocarbon group irrespective of the linking group, and changes with a given linking group when the hydrocarbon part of the coating ion changes; further, since bubble attachment does not occur in the absence of hydrocarbon groups, the clear implication of the evidence is that the interface at which the captive bubble adheres is a hydrocarbon-water interface, in other words that the hydrocarbon end of the coating ion is oriented outward from the mineral surface.

Conversely films which present surfaces with solubilising groups toward the water (POLAR GROUPS) are water-avid instead of water-repellent, and cause water wetting rather than gas-bubble attachment.

Coating by oily collectors. *When coating is effected with undissolved neutral oily liquids, the action occurring between the solid surface and the coating agent is one of mutual solution, and the coating formed is a solution of the two substances.*

A limited number of minerals, specifically sulphur, graphite, gilsonite, bituminous coal, anthracite, and certain sulphide minerals with S–S orientation, including molybdenite, orpiment, and stibnite (Bragg, *Atomic structure of minerals*, Cornell Univ. Press), are filmed in water by neutral hydrocarbon liquids and by other neutral oily liquids such as carbon bisulphide and dixanthogen, under circumstances which preclude the likelihood of chemical reaction. When such filming occurs there is, in many cases, visible etching, which can be correlated with solution of the mineral surface in the oily liquid. The film must be thin enough to be substantially rigid; bubbles adhere only where the film is thin enough to show interference colors, or even to be microscopically invisible; adherent contact cannot be established between air bubbles and pure hydrocarbon oils in water either by precipitation (Art. 11) or by pressure.

The neutral oily liquids are not collectors for substances such as sulphides or rock-forming minerals which they do not dissolve. No amount of pressure that can be brought to bear between such an oil droplet and such a mineral surface in water, in the absence of a dissolved collector for the mineral, will cause spreading or filming by the oil. When oleic acid spreads on galena it does so because the surface molecules of oil ionize sufficiently to react with the particle surface and form oriented coatings of lead oleate thereon; spreading of the remainder of the oil is by solution coating of this film. Mixtures of neutral oils with active collectors (the oleic acid-petroleum mixtures, the coal- and wood-tar oils, and the reconstructed oils of early-day flotation) were instances of such a mechanism. (See also Art. 6.)

COLLECTING AGENTS

Chemical collecting agents, so-called, *i.e.*, collectors which function by chemical reaction, are organic compounds, either acids, bases, or salts. They must be soluble in water to at least a small degree. If they are of acid or salt types, they must ionize in aqueous solution. The ion that combines with a component of the mineral surface must be of hydrocarbon structure at the end away from its reactive bond. The reactive bond of the coating ion must be one capable, as modified by the rest of the ion framework, of reacting with an ion present at the mineral surface, to form a compound which is insoluble under the conditions of concentration of reagent and other ions existing in the extremely thin zone of pulp liquor near the mineral-particle surface. Basic-type collecting agents, of which the only ones generally used at present (1943) are the amines and aminium salts, need not necessarily be ionized, but must have the same hydrocarbonlike nature in the part spatially removed from the active group.

Hydrocarbon terminal groups may be of any nature, although they are aliphatic in the majority of commercial collectors and aromatic in most of the remainder. The carbon content of the hydrocarbon part of the reactive ion must be sufficient to overcome the solubilizing effect of the reactive group in this ion when reaction with the mineral is made possible. What this carbon content must be depends, apparently, upon the nature of the reactive group. Thus when the reactive group is carboxyl, at least ten carbon atoms in the chain (*e.g.*, decylic acid) seem to be necessary for collection with low concentrations, while when xanthyl is the reactive group, the hydrocarbon radical may be methyl (CH_3), *e.g.*, potassium methyl xanthate. Aromatic groups such as phenyl and naphthyl are not as effective water repellents per C atom generally as aliphatic groups of the same molecular weights; *e.g.*, phenyl, C_6H_5, is substantially equivalent to ethyl, C_2H_5; their water-repellent character is greatly increased by aliphatic substituents on the ring.

Characteristic contact angles. The effectiveness of collectors with a given reactive group depends upon the contact angle which the hydrocarbon group of the collector will produce. Angles characteristic of various aliphatic groups are: Methyl, 50°; ethyl, 60°; propyl, 68°; butyl, 75°; amyl, 85°, iso-amyl, 86°; oleyl, 90°; cetyl, 95°; iso-groups, in general, give angles slightly higher than the corresponding normal configurations. The behavior of aromatic groups is not so simple and no generalization can yet be formulated. Phenyl in monophenyl dithiocarbamate gives an angle that averages 54° while in thiophenol the angle is 70°; it is possible that the presence of the amino configurations in the carbamate has a solubilizing effect; similar effects are shown by the acid soaps. In phenyl-aliphatic salts the angle seems to be that of the aliphatic radical. With mercaptan active groups, phenyl, cresyl, benzyl, and naphthyl all yield the same angle, 70°. See also Table 1.

[illegible] contact angle. The recovery obtained with a given quantity of collector increases with increase in contact angle and, conversely, the quantity of reagent required to effect a given degree of recovery decreases with increase in carbon content in any homologous series. This is because the increase in contact angle with increase in molecular weight is more rapid than the increase in molecular weight with increase in carbon content. The essential limitation in the application of contact-angle tests to actual flotation conditions is that conditions in the pulp must be essentially the same as in the test cell; they may actually be and usually are quite different. See Table 3.

Reactive groups may be acid or basic in character. The acid groups are usually carboxylic or sulphydric, typified respectively by the higher fatty acids and their alkaline salts (soaps); and by the mercaptans, the xanthates, and thiophosphoric acids and their salts. Such collectors are designated anionic from the fact that the hydrocarbon group is in the anion. Their reactions with mineral sur-

faces have been discussed in Art. 3. CATIONIC collectors are organic bases, *e.g.*, amines, or salts of such bases. For reactions see Art. 5.

4. ANIONIC COLLECTORS

Anionic collectors are used in the great majority of present-day flotation operations. As described in the literature they constitute a bewildering variety of chemical and trade names. Actually they may be grouped into a small number of classes based on the active, *i.e.*, acidic groups, which determine their capacity to attach to mineral particles; the hydrocarbon loading, which determines solubility and water-repellency of the mineral coating, is what produces the variety and multiplicity of names.

Common effective acidic classes are the carboxylic R·COOH, and the sulphydric, which latter, so far as mechanism of reaction in flotation is concerned, may be looked upon as X—SH, in which X is any one of a great variety of loadings, in all cases containing hydrocarbon groups, but in which the linking to the sulphur, while usually through carbon, may be through phosphorus. A few apparent collectors are of sulphoxy type, $R \cdot SO_3H$ and $R \cdot SO_4H$. In all cases the H of the group formula is acidic; the collector may be used in the form of a salt, usually Na or K.

Vörlander rule. In judging the probability of acidic character of a hydrogen atom the VÖRLANDER RULE (*34 Ber. 1633*) may be applied. It asserts that a hydrogen in organic compounds is acidic when the bond between the third and fourth atoms removed from the hydrogen is double (unsaturated). Thus in carboxylic acids

H—O—C=O; in xanthic H—S—C=S.
1 2 3 4 1 2 3 4

Contact angles (Sec. 19, Art. 22) for various anionic collectors are given in Table 1.

Table 1. Contact angles of anionic collectors (*mostly after Wark, PF*)

Hydrocarbon group		Reactive Group				
Name	Formula	Mercaptan R·SH	Carboxyl R·COOH	Xanthyl RO·CS·SH	Thiophosphate $(RO)_2 \cdot PS \cdot SH$	Dithiocarbamate $R_2N \cdot CS \cdot SH$
Methyl	CH_3	....	0	50	.....	50 *a*
Ethyl	C_2H_5	60	.....	60	59	59 *a*
n-Propyl	C_3H_7	.....	.....	68	.....	.....
n-Butyl	C_4H_9	74	.....	74	76	77 *a*
Isobutyl	C_4H_9	.....	.....	78	.....	.....
n-Amyl	C_5H_{11}	.....	.....	.....	.....	85 *a*
Isoamyl	C_5H_{11}	.....	.....	86	.....	.....
n-Hexyl	C_6H_{13}	.....	.....	.....	.....	.....
Cetyl	$C_{16}H_{33}$	.....	.....	96	.....	.....
Benzyl	$C_6H_5 \cdot CH_2$	71	.....	72	.....	.....
Phenylethyl	$C_6H_5 \cdot C_2H_4$	.....	.....	71	.....	61
Cyclohexanol	C_6H_{11}	.....	.....	75	.....	.....
Fenchyl	$C_{10}H_{17}$	.....	.....	73	.....	.....
Heptyl	C_7H_{15}	.....	60	.....	.....	.....
Naphthyl	$C_{10}H_8$	69	.....	.....	.....	.....
Phenyl	C_6H_5	70	.....	.....	.....	54
Phenylmethyl	$C_6H_5; CH_2$	.....	.....	.....	.....	50
Cresyl	$CH_3 \cdot C_6H_4$	71	.....	.....	.....	.....
Oleyl	$C_{17}H_{33}$	.....	88	.....	.....	.....

a "Di"-salt.

Xanthates

Xanthates are the principal collectors of the sulphydric class. They are useful for heavy and precious metals both in sulphide and in oxidized minerals, but not for earth-metal minerals. They are products of reaction between carbon bisulphide, an alcohol, and a strong base, *e.g.*, NaOH, in which water is split out, and the alcohol residue is linked to the disulphide carbon. The general structural formula is

$$RO—\overset{\overset{S}{\|}}{C}—S—H \text{ (or M)}$$

where R is an alkyl group (hydroaromatic and aryl groups linked through aliphatic substituents are possible) and M a metal.

Effectiveness of xanthates as collectors increases with the molecular weight of their alcohol radical (Art. 3). METHYL xanthates, while effective with Cu, Hg, and Ag minerals, are not highly so and are not used commercially. ETHYL and the C_3 to C_5 xanthates are effective in normal concentrations without activators for all heavy-metal sulphides except sphalerite and pyrrhotite. Table 2, after Wark and Cox (*112 A 215*), summarizes contact-angle effectiveness tests of the various alkyl xanthates as collectors at normal concentrations.

Table 2. Effectiveness of alkyl xanthates

Sulphide	Xanthate						
	Methyl	Ethyl	Propyl	Butyl	Amyl	Hexyl	Cetyl
Pyrrhotite	Activation necessary *a*						
Sphalerite							
Pyrite							
Galena							
Chalcopyrite							
Bornite	Activation unnecessary						
Chalcocite							
Hg and Ag							

a May be common-ion control or resurfacing.

The failure to collect pyrrhotite and sphalerite is due to the fact that the ferrous and zinc xanthates of the C_1 to C_5 alcohols are more soluble than any possible concentrations of such xanthates that could be formed with an economic quantity of reagent. On the other hand, cetyl xanthate, from a C_{16} alcohol, yields a relatively insoluble zinc xanthate and is a collector for sphalerite. Hexyl is transitional. The decrease in solubility with increase in molecular weight is characteristic of homologous series. The order of the minerals in Table 2 is roughly the converse of Warren's (*26 Bul CIMM 186*) order of solubilities of the heavy-metal xanthates, *e.g.*, Au > Cu > Pb > Ni > Zn > Fe''. It is probable that Hg and Ag fall between Au and Cu. Pyrite yields enough ferric ion under normal circumstances to form ferric xanthates, which are relatively insoluble. It has been shown, however, by several investigators that the molecular weight of homologous collectors, the quantity added, the time of treatment, and the effectiveness in flotation of a given mineral are interrelated factors—as might be expected in a chemical reaction—and that with increase in quantity and/or time of treatment with the lower homologs, effectiveness of flotation may be made equal to that with a higher homolog. In general the branched chain xanthates make better recoveries than the normal isomers. Tests at Columbia University with relatively concentrated solutions of metal ions and ethyl xanthate showed that in addition to the metal xanthates already described Co'', Sn'', Cd'', Pt'''', and Bi''' all yielded immediate heavy precipitates of the same character as those formed by Pb'', Cu'', etc., which were, therefore, probably the corresponding xanthates. On the other hand, Cr''', Al''', U^{+6}, V^{+5}, Mn'', and Fe'' failed to give such precipitates (*112 A 362*).

Anomalous xanthate contact angles are often obtained with copper minerals. When cupric salts react with a xanthate, the end xanthate products of the reaction are cuprous xanthate and dixanthogen. The latter, which is a neutral insoluble oil, spreads on the xanthate film by solubility coating (Art. 3) and gives its own characteristic contact angle which, for ethyl dixanthogen, is upward of 80°. Thus higher angles than the characteristic 60° (Table 1) are frequently reported for ethyl xanthate on copper minerals.

Activation of sphalerite by Ag, Hg, Cu, and Pb ions (Art. 7) renders it readily flotable by C_2 and higher xanthates.

Commercial xanthates. The xanthates commonly used in the mills, their common names, and some common trade names follow.

Potassium ethyl xanthate; potassium xanthate; Z-3.
Sodium ethyl xanthate; sodium xanthate; Z-4.
Sodium isopropyl xanthate; Z-9; AC 343.
Potassium *n*-butyl xanthate; butyl xanthate; Z-7; Raconite (about 70% xanthate and 30% thiocarbonate; *IC 6241*).
Potassium *sec*-butyl xanthate; butyl xanthate; Z-8.
Sodium *sec*-butyl xanthate; AC 301.
Potassium amyl xanthate; amyl xanthate; Z-5.
Pentasol xanthate; Z-6; made from crude (unfractionated) amyl alcohol. PENTASOL contains 6 isomers of C_5H_{11} OH (*128 J 466*).
Potassium hexyl xanthate; hexyl xanthate; Z-10.

Collecting strength. The xanthates are, in general, more powerful collectors than the Aerofloats (see p. 09), pound for pound. They are added, therefore, in smaller quantities, and are frequently used to scavenge in later cells after Aerofloat roughing. The difference in collecting power between the lower and higher xanthates (C_2 *vs.* C_4 or C_5) at low concentrations is tremendous, but becomes much less at higher concentrations.

Buchanan (*TP 18 AC*) gives the laboratory data in Table 3 for flotation of a copper ore

At RAY (*IC 6241*) substitution of higher xanthates permitted marked reduction in the number of flotation machines required to handle mill tonnage, with corresponding saving in power and maintenance. On the other hand, the quantities added are so small that the loss due to precipitation by soluble salts may easily lower collector concentration to such an extent that recovery falls off.

Xanthates of $>C_{12}$ alcohols, with insoluble oils, have been proposed for phosphate flotation (*U. S. pat. 2,162,495*). Such practice would require activation.

Table 3. Recovery *vs.* concentration for several xanthates

	Recovery, %			
Reagent, lb. per ton.....	0.01	0.02	0.04	0.08
Ethyl xanthate.....	69.8	82.6	90.9	93.6
Isopropyl xanthate.....	76.4	89.8	94.9	96.1
Secondary butyl xanthate...	82.4	91.3	95.3	96.8
Amyl xanthate	86.9	93.5	95.0	96.0

Quantities of xanthates required in sulphide flotation range from 0.2 lb. per ton downward, the necessary amounts being smaller the higher the molecular weight and the smaller the extent of sulphide oxidation. When used for oxidized ores without protection (sulphidizing, solution in organic sulphides) the quantities required may rise to several pounds per ton.

Use. Xanthates are preferably used in weakly alkaline solutions. Bubble-attachment to collector-coated particles is difficult to establish in highly alkaline solutions; in acid solutions the salt goes over to the relatively insoluble acid which decreases dispersion, and requires more reagent and time for coating. In strongly acid solutions the xanthic acid decomposes, yielding CS_2 and the corresponding alcohol.

Xanthomolybdic acid, $MoO_3(RO \cdot CS \cdot SH)_2$, an oily liquid formed by acidifying an aqueous solution of 2 parts xanthate to 1 part of a molybdate, is recommended for floating molybdenite (*U. S. pat. 2,148,475*). It is substantially insoluble in water and should be added in an organic solvent. Since molybdenite is collected by most oils, this seems to be a relatively expensive way of making a collecting oil.

Thiophosphates

Thiophosphates are of the sulphydric class. They are reaction products of phosphorus pentasulphide with various organic compounds such as phenols, alcohols, mercaptans, thioalcohols, amines, and nitriles (*U. S. pats. 2,038,400*, and *2,134,706*). The products with phenols and alcohols are the ones in common use (AEROFLOATS); they have the general structural formula

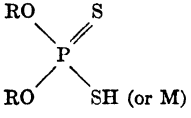

in which R is an alkyl or aryl radical and M an alkali-metal or ammonium ion. These compounds are water soluble and form relatively insoluble salts with heavy metals, but not with the earth metals. Wark and Cox (*112 A 267*) have found that the heavy-metal dithiophosphates are more soluble than the corresponding xanthates or dithiocarbamates and that, as collectors, they, of the three, are the most easily affected by depressants. Since the iron sulphides are the most easily depressed, the Aerofloats are useful for differential work involving iron depression. On the other hand, in pulps of low alkalinity or slightly acid, they are effective to float iron sulphides.

Aerofloat 15 is a black liquid made by reacting cresol with 15% by weight of P_2S_5. In the type structural formula above R is $CH_3 \cdot C_6H_4$—. The product is the acid. There is also a considerable excess of cresol. Hence the mixture has both collecting and frothing properties, strengthened by a certain amount of neutral oil usually present in the original cresol. Viscosity is slightly higher than that of cresol, making it adaptable to disk-type feeders (Art. 34). It is not a good coating agent for iron sulphides in alkaline circuits but films other common sulphides effectively; hence it is used in differential separation in which iron sulphides are to be depressed. It is frequently used also as a frother in flotation of gold ores. It is best dispersed by adding to the grinding circuit.

Aerofloat 25 is made of the same ingredients as Aerofloat 15, but is compounded with 25% by weight of P_2S_5. It contains, consequently, more of the collector compound, is more powerful, pound for pound, and the differential effect relative to iron minerals is less.

Aerofloat 31 is Aerofloat 25 saturated with (containing 6% of), thiocarbanilid. It is especially adapted to recovery of galena and of silver minerals, and is recommended for oxidised gold ores.

Aerofloat 239 is diamyl dithiophosphoric acid neutralized with ammonia and thinned with 10% of ethyl or isopropyl alcohol. It is largely soluble in neutral or alkaline water and forms a milky suspension in a 10% mixture. It has definite frothing power. It is especially recommended for copper flotation in pulps of high soluble-iron content. It is relatively nonselective as between sulphides. Data on its utility for argentiferous galena are contradictory (*TP 7 AC; 21 #16 MJA ?*).

Aerofloat 241 is Aerofloat 25 neutralized with NH_3, thereby rendered substantially soluble in neutral or alkaline pulp and more readily dispersed. Its collecting and frothing characteristics are practically those of the parent.

Aerofloat 242 is Aerofloat 31 neutralized with NH_3 and thereby rendered more readily dispersed. Its utility is substantially that of the parent except that as a frother one part of Aerofloat 242 is roughly equivalent to 1 1/2 parts of cresylic acid.

Stability. All of the liquid Aerofloats suffer some sedimentation on standing, without, however, noticeable effect on their flotation properties.

Dry Aerofloats (following) are thiophosphoric reaction products neutralized with solid sodium or ammonium carbonates. All are substantially water soluble and nonfrothing. They are commonly fed as dilute aqueous solutions. All exert but little collecting power for pyrite.

Sodium Aerofloat is the diethyl phosphoric salt. It does not collect pyrite strongly in alkaline pulps and is, therefore, used for sphalerite and copper minerals when pyrite is to be depressed. Wark and Cox (*112 A 231*) report necessity for activation by Cu for both galena and sphalerite.

Sodium Aerofloat B is the di-isopropyl salt, similar in flotation properties to the preceding but a stronger collector.

Aerofloat 203 is also the di-isopropyl salt (see the preceding) but more concentrated.

Aerofloat 208 is the sodium-neutralized reaction product of a 50-50 mixture of diethyl and secondary dibutyl phosphoric acid. It is particularly effective for metallic gold, silver, and copper and is used also for the corresponding sulphides.

Aerofloat 213 is the NH_4 analog of Aerofloat B, but more concentrated. It is recommended for gold, silver, zinc, and copper ores but not for lead.

Aerofloat 226 is the di-secondary butyl ammonium dithiophosphate. It is similar to Aerofloat 213 but somewhat more powerful.

Aerofloat 238 is the sodium analog of Aerofloat 226. It has the same collector characteristics as Aerofloat 208, but is more powerful.

Aerofloat 239 (see *ante*).

Aerofloat 243 is of the same composition as Aerofloat 203, but is even more concentrated.

Quantities of Aerofloat reagents ordinarily necessary range from 0.25 lb. per ton downward.

Mercaptans and thioalcohols are the sulphur analogs of the alcohols and phenols respectively. Their structural formulas are R·SH where R is respectively an alkyl or an aryl group ± hydrocarbon substituents, and the —SH group is acidic. Both classes are relatively slightly soluble in water and acid pulps, but ionize as salts in pulps made alkaline by sodium or potassium compounds. They are collectors for sulphide minerals and are asserted to be selective for copper and zinc minerals over pyrite and to be effective for floating oxidized copper minerals (*U. S. pat. 2,125,337*). BARNAC is a mercaptan of a higher alcohol (*21 # 13 MJA 7*).

Thiocarbanilid (diphenyl thiourea),

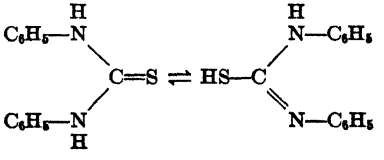

is a white crystalline solid which, in water, assumes equilibrium between the tautomeric forms indicated. The acidic (—SH) form is the one active in flotation, the hydrogen being replaceable by heavy-metal ions to form relatively insoluble coatings on minerals. Since the two forms are in equilibrium, the nonacidic form shifts over as fast as the acidic is taken out of solution by reaction. Thiocarbanilid is very slightly soluble in water, somewhat more soluble in alkaline solutions. It is frequently added in solution in an organic solvent (*e.g.*, T-T MIXTURE = 15% thiocarbanilid and 85% *ortho*-toluidin) but should, nevertheless, be added in the ball mill. It is an excellent collector for galena and is relatively ineffective for iron sulphides. The quantity required is usually less than 0.2 lb. per ton.

At MASCOT (*IC 6397*) the addition of thiocarbanilid either dry or as T-T mixture, together with Barrett 634, increased recovery from 85% to 98%. At TOOELE (*128 J 295*) addition of 0.1 lb. per ton to the ball mill increased lead recovery somewhat (zinc unaffected) and stabilized operation in the lead section.

Wettable thiocarbanilid (AC THIOCARBANILID 125) comprises thiocarbanilid mixed with a wetting agent, *e.g.*, calcium lignin sulphonate, licorice root, saponin, alcohol slops, soap bark (*U. S. pat. 2,185,191*). It is recommended to be fed as a 5 to 10% dispersion, using a disk-and-cup type feeder. Dispersion is also said to be effected by dissolving thiocarbanilid in 20 parts strong sulphuric acid (3 or 4 parts 1.84-sp.gr. acid to 1 part H_2O) and pouring the resultant solution in 20 to 400 parts of water (*U. S. pat. 2,053,274*).

Diphenyl thiocarbazid, $(C_6H_5\cdot NH\cdot NH)_2\cdot C{=}S$, in which the hydrogen on an amine group adjacent to the central carbon is labile and, on the sulphur, acidic as in thiocar-

banilid, is a specific collector for Co and Ni minerals in the presence of Cu and Fe minerals (*112 A 363*).

Mercaptobenzothiazole (FLOTAGEN; AC 400 SERIES)

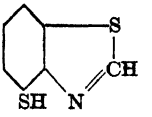

is used for copper and for zinc sulphides. Mixed with soda ash it is marketed as FLOTAGEN S, AC 444, or as SODIUM CAPTAX and is readily soluble in water. In alkaline pulp with Aerofloat 238 or xanthate Z-8 it is used for lead carbonate without sulphidizing, and for stage addition with sodium sulphide for oxidized copper ores. Wark and Cox (*134 A 64*) state that the responses of cerussite and malachite are better with no free alkali present, but that anglesite responds better in an alkaline pulp. It has also been used for oxidized and partially oxidized pyritic gold ores. The critical *p*H value (Art. 10) for galena with this reagent is 7.8 at 40° F and 9.2 at 95° F (*134 A 55*). It does not collector-coat sphalerite without activation. Pyrite is depressed by hydroxyl and cyanide in its presence more readily than with xanthates. Parsons (*123 J 757*) says that mercaptobenzothiazole can be used with cyanide, sodium sulphite, or sodium thiosulphate; it should be added solid, hence requiring time and agitation to dissolve it before it becomes effective, but the contact time should be minimized; it can be used only in alkaline pulp. The sodium salt goes into solution readily and should not be kept in contact with the pulp for more than one minute before flotation.

Dithiocarbamates are made by treating CS_2 with cold alcoholic ammonia or amines (*vide* xanthates). The general formula is $X_2N \cdot CS \cdot SM$, where X is hydrogen or an alkyl or aryl radical, according to the entering base. The lower alcohols yield powerful collectors; Wark (*PF*) reports that they are more powerful than the xanthates. They are not, however, as cheap because ammonia rather than a caustic alkali is an ingredient.

Trithiocarbonates, $RS \cdot CS \cdot SM$ (or H) form heavy-metal salts of low solubility, the degree depending upon the type and molecular weight of R. None of them is a well-known collector.

Organic sulphides

When sulphydric collectors are subjected to oxidizing conditions, they tend to form organic sulphides and disulphides, many of which are substantially insoluble oily liquids at atmospheric temperatures. When pure they are not collectors of the reactive (chemical) type, but are solution-type collectors (Art. 3) for particles already having hydrocarbonlike coatings. When they contain residual sulphydrates in solution they form excellent spreading-type collectors (Art. 6), yielding higher contact angles than are characteristic of their hydrocarbon groups.

Dixanthogen, $RO-\overset{\overset{S}{\|}}{C}-S-S-\overset{\overset{S}{\|}}{C}-OR$ is formed by oxidation of xanthates. MINEREC is principally dixanthogen, formed by treating xanthate with ethyl chlorcarbonate, which is a strong oxidiser. It is used, in minute quantities, to supplement the action of true sulphydric collectors, usually with more or less oxidized base-metal minerals. It should be added in the grinding circuit or in a conditioner. Dixanthogens of secondary aliphatic monohydric alcohols, *e.g.*, isopropyl, *sec*-butyl, diethyl carbinol, *sec*-hexyl, *sec*-heptyl are described (*U. S. pat. 2,061,201*). A similar type of reagent formed by oxidation of dithiophosphates is described (*U. S. pat. 2,060,815*).

Dixanthogens, when pure, do not coat clean sulphides, *i.e.*, they act like neutral oils in this respect (Art. 6). As ordinarily made, however, they contain residual xanthate in solution and thereby have more or less tendency to collector-coat sulphides according to their xanthate content. Such material exhibits the selective action between sulphides and nonsulphides observed by Wark and Cox (*118 A 216*).

Gaudin *et al.* (*112 A 346*) assert that both galena and covellite react with dixanthogen to form the corresponding xanthates; the experimental basis comprised grinds of many hours (2 1/2 to 92) in closed containers, and is not to be accepted as in any way representative or indicative of normal operation.

Thiuram disulphides $R_2N-\overset{\overset{S}{\|}}{C}-S-S-\overset{\overset{S}{\|}}{C}-NR_2$ are the oxidation products of thiocarbamates. Their use as collectors has been suggested in patents, but they have not been used commercially.

Heterocyclic sulphides, *e.g.*, thiophenes,

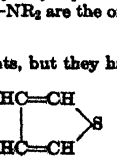

have been suggested (*U. S. pat. 2,169,313*) as collectors for metallic sulphides. Since, however, they act chemically much like the benzenes, they promise little.

Carboxylic collectors

This group comprises the acids and salts in which the active group is CARBOXYL (—COOX), where X is acidic hydrogen or a base. The only carboxylic collectors which have had other than laboratory use are the fatty and resin acids and their alkali salts (SOAPS). They have been used for both base-metal and earth-metal minerals, but at present have been supplanted in base-metal work by the sulphydric collectors. Flotation with fatty acids and/or soaps is called SOAP FLOTATION.

Fatty acids comprise several homologous series of compounds consisting of chain-type hydrocarbon radicals with a carboxyl group in terminal position. Thus their generalized formula is $R \cdot COOH$. They are so named because the higher members of the series occur naturally in animal fats. They also constitute, either as the free acid or as ESTERS ($R \cdot COO \cdot R'$ = reaction products of the acid with an alcohol, $R' \cdot OH$, thus $R \cdot COOH + R'OH \rightarrow R \cdot COO \cdot R' + H_2O$) the greater part of all animal fats and oils and vegetable oils. When the R group has all of its carbon valences satisfied, the fatty acid is SATURATED, *e.g.*, stearic acid, $C_{17}H_{35}COOH$. If two of the adjacent carbons in the R group have each one carbon valence unsatisfied, the acid is MONO-UNSATURATED, *e.g.*, oleic acid, $C_{17}H_{33} \cdot COOH$. Some fatty acids, notably those in castor oil and in some fish oils, have a number of the carbons in the R chains unsaturated; such acids are said to be highly unsaturated. The common unsaturated acids are liquid at normal atmospheric temperatures; the corresponding saturated acids above C_8 are solids. All of the higher members are relatively insoluble in water, but are sufficiently soluble to ionize at the interface between their dispersed masses and water with which such masses are in contact. Oleic and palmitic acids are the ones commonly used. Keck *et al.* (*134 A 102*) found that in floating hematite the order of effectiveness of the fatty acids tried was oleic > lauric > myristic > palmitic > caprylic for less than 1 lb. per ton of collector, while the more soluble caproic and valeric acids gave substantially no recoveries at 10 lb. per ton.

Soaps are metallic salts of the higher fatty acids ($R \cdot COO \cdot M$). The sodium soaps are the hard soaps of ordinary domestic and household use; the potassium soaps are softer. Soaps are made by decomposing natural fats and oils with sodium and potassium hydroxides respectively. By an extension of older terminology, the organic salts formed by reaction of a fatty acid with an organic base, *e.g.*, an amine, are also called soaps. Alkali-metal soaps and amine soaps are soluble to a considerable extent in water, and ionize to a somewhat smaller extent than they dissolve. The heavy-metal and earth-metal soaps formed by metathetic reaction between salts of the corresponding metals and an alkali-metal or amine soap are relatively insoluble in water; both classes, however, form in water acid and basic soaps, one or the other predominating according to the *p*H and to the metal of the soap; the neutral soaps of these metals exist alone only within comparatively narrow *p*H bands (*153 A 500*). These acid and basic soaps are ionized in water, are consequently water repellent, and, even though adherent to mineral-particle surfaces, do not have collector action. In general the *p*H of neutral-soap formation is that through which the hydroxide of the metal precipitates.

Crago (*U. S. pat. 2,105,807*) reports flotation experiments which confirm this analysis, showing that when a mixture of nonsulphide minerals all flotable with soap are conditioned together in a deslimed pulp, one floats preferentially with light frothing and that the differential effect is accentuated by repeated cleaning.

Use. Fatty acids and soaps are collectors for all minerals which, in water, free an earth- or heavy-metal ion, or onto the surface of which such an ion can in any way be plated (Art. 7). This fact has the effect of making these collectors largely nonselective, and it is for this reason that they have been supplanted for heavy-metal collection by the sulphydrate collectors, which do not form insoluble salts with the earth metals. But since no such substitute has yet been found for the earth-metal minerals, the fatty compounds constitute the principal collectors for many of these. The carbon content must be C_8 or greater, preferably greater than C_{12}, on account of the relatively high solubility of the earth-metal soaps of the lower acids, and it should not be greater than C_{18} or C_{20}, because of the low solubility of the higher alkali-metal soaps, in which form the collectors are usually dispersed. Some collection can be effected by $<C_7$ fatty acids by adding sufficient quantities to depress ionization of the coating soap by mass action, but recovery is poor and the operation uneconomic. Selectivity between the various earth minerals has to be achieved by control of *p*H, which determines the degree of conversion of the precipitated soap coatings to acid and basic forms, and by control of the solubilities and chemical characters of the surfaces of the minerals that it is desired to depress, so as to prevent the formation of effective soap coatings on them. (See Art. 10, ***Sodium silicate, Phosphates;*** and Arts. 52, 53 under the names of specific minerals.)

Introduction of the collecting ion as the acid is preferable to addition as soap, from the standpoint of froth control, especially if considerable quantities are added at once, since large quantities cause the formation of voluminous, lightly loaded froths. Mineral oils are credited with correcting such overfrothing; what they really do is to smear over the over-coated mineral-particle surfaces and render them collectable, whereupon the solid load on the bubbles breaks down the large ones and adds stability to the small (see Art. 12), so that compact heavily loaded and desirable froths are produced.

Miscellaneous uses. The fatty-acid collectors are frequently depended upon for both collecting and frothing when used in alkaline pulps. The practice is bad, since it does not permit independent

control of the two functions. An independent noncollecting frother will ordinarily improve both grade and recovery, and decrease total reagent cost. Soaps of saturated fatty acids froth much less than their unsaturated analogs.

Since fatty acids are collectors for iron and manganese oxides, they are sometimes used for gold ores in which the values are associated with these oxides. They are also used for some oxidized metalliferous-salt minerals, *e.g.*, copper carbonates at KATANGA, and in some instances for floating iron sulphides after depression in differential sulphide flotation. The water in which they are used should be kept as "soft" as possible (Art. 32), since lime and magnesium soaps precipitated in solution tend to smear all solids indiscriminately and render them all more or less floatable.

Quantities of soaps and fatty acids required vary enormously with pulp conditions and the methods of use. Since the fatty acids are relatively insoluble they must be dispersed mechanically, and the amount needed in a given pulp will vary inversely as the degree of dispersion. In alkaline pulps the alkali-metal soap formed acts as an emulsifying agent, so aiding dispersion; in acid pulps an emulsifier of the sulphated alcohol type, which will ionize in such an environment, should be used. Neutral oils added with the fatty acid will be emulsified with it. The amount of reactive collector required will increase with the fineness of the feed and with the extent of closure of the gangue surfaces (Art. 8). If slime is removed, the *p*H is not too high, and an auxiliary frother is provided, 0.5 lb. or less of oleate soap will suffice unless the feed is very fine sand and substantially all of it must be floated. With good emulsification the amount of fatty acid will not exceed twice the soap requirement. Stage addition (Art. 33), the use of neutral oil, and oiling in a thick pulp may more than halve these figures.

Tall oil (TALLOEL; AC 708) is a mixture of fatty and resin acids extracted from wood pulp in sulphite treatment. It is a cheap source of fatty acid. The resin-acid content adds frothing power, which may become undesirably great if *p*H is permitted to rise above 9. The tanninlike bodies present in the crude sulphite liquor depress frothing somewhat; slime in feed accentuates it. Talloel is used commercially both in phosphate and cement-rock flotation, and has proved effective experimentally for fluorite, barite, manganese oxides, and tungsten minerals.

Talloel soap (AC 608) is made by dissolving tall oil in moderately strong caustic soda solution (about 1 part caustic to 6 parts of oil). This is best added as a dilute solution, *e.g.*, 5%.

See also AMMONIATED TALLOEL, Art. 13.

Naphthenic acids are carboxylic acids of the type R·COOH in which the R is a ring hydrocarbon, usually of 5 or 6 carbon atoms, with two hydrogens or hydrocarbon substituents on most of the carbons, *i.e.*, without unsaturation in the ring. They have been used for phosphate and barite (*RI 3397*).

Use of neutral oils with soaps developed from the fact that unless the *p*H was rigidly controlled at the point of maximum neutral-soap formation—which it never was—the contact angle ranged up and down the legs of the curves of Fig. 2, and flotation was uncertain and frequently poor. But neutral hydrocarbon oils will spread over soap-coated surfaces that contain considerable amounts of acid and basic soaps, whereupon the surface presented for air attachment is the neutral hydrocarbon surface, the contact angle against which is affected little or not at all by wide changes in *p*H. Furthermore, the contact angle against a neutral hydrocarbon surface is 15° to 20° higher than that against a surface monomolecularly coated with a fully neutral C_{17} soap, the difference bringing the angle over into the obtuse range (>90°), which causes a tremendous increase in tenacity of bubble attachment.

Quantity of oil used must be kept down to such an amount that the film is less than about 4 molecules in thickness; below this thickness the layer, on a solid surface, has the characteristics of a solid, above it the characteristics are that of a liquid, and gas bubbles will neither precipitate at nor adhere to a liquid oil-water interface.

Sulphoxy collectors

The wetting-agent frothers (Art. 13) are asserted in a number of patents to be collectors for both sulphide and nonsulphide minerals.

Lenher *et al.* (*U. S. pat. 2,074,699*) state that the mixture of organic sulphonates and sulphates resulting from sulphonation of crude lauryl alcohol is a specific collector for sillimanite; will float galena, sphalerite, and the copper sulphides and barite; and generally acts as a collector wherever a fatty acid would serve. One of the oldest of the wetting agents, TURKEY RED OIL, which is largely a sulphuric-acid ester of glyceryl ricinoleate, was described as a collector by Everson (*U. S. pat. 348,157/1886*). Dean *et al.* (*RI 3419*) state that the wetting agents are somewhat less effective collectors for sulphides than the xanthates are and are more sensitive to soluble salts and slimes; that some float sphalerite without activation; that some are as good for nonsulphide flotation as fatty acids are, but that in general larger amounts are required; and that Emulsol X-1 (the sodium salt of the sulphate ester of complex [probably unpurified] higher alcohols) is specific for barite, amblygonite, and beryl. All of these statements are consistent with the conclusion of Dean, Clemmer, and Cooke (*RI 3333*) that the residual fatty acids in some of the cruder wetting agents make them act as anionic collectors, and with the experience of

other investigators that only such recovery as is to be expected from accidental contamination is obtained with these reagents without additional collectors. Some of them as sold are intentional mixtures, thus EMULSOL 238 comprises 7 parts Emulsol X-1, 83 parts corn oil (a mixture of fatty-acids and glycerides) and 10 parts water (*RI 3328*), yet the emulsifier is carelessly given credit for collection. Ralston (*40 CIMM 691*) reports that U. S. POTASH CORP. is using sodium octadecyl sulphate (AVIROL 80) as frother and collector for floating sylvite from halite in saturated brine, but Dean *et al.* (*loc. cit.*) report that Emulsol X-1 will not perform this separation although it can be effected by use of a neutral-oil emulsion made with the X-1 reagent. Dean and Hershberger (*134 A 88*) assert that sulphonation of oleic acid reduces its effectiveness as a collector and that the butyl ester of the sulphonated acid is even less effective. [The ester is probably completely ineffective, such effect as was observed being due to unesterified acid.]

DUPONOL 80 = Na octyl sulphate; DUPONOL WA PASTE = technical Na lauryl sulphate; DUPONOL LS PASTE = technical Na octadecanyl sulphate; DUPONOL D PASTE = higher alcohol sulphate; ULTRA-WET is a sulphonated petroleum product, C_{14} average; EMULSOL X-1 = sulphates of C_8–C_{12} alcohols (*RI 3271*).

Jayne *et al.* (*U. S. pat. 2,278,107*) describe the organic sulphonic-acid salt of an amino alcohol mixed and probably esterified with a fatty acid; a typical example is

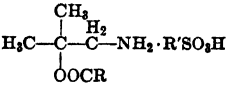

5. CATIONIC COLLECTORS

Definition. Cationic collectors, properly speaking, are ionizable organic compounds in which the ion that carries the hydrocarbon and reactive groups is the cation. Such collectors have the general formula R—M—$(R')_n$—Y, where R is a hydrocarbon group, R′ is hydrogen, or the same or a different hydrocarbon group from R, M is pentavalent nitrogen or quadrivalent sulphur, n is a number equal to the valence of M reduced by 2, and Y is hydroxyl or an acid anion, usually halide. They comprise the "-onium" compounds, tetrammonium, pyridinium, quinolinium, and sulphonium.

Amines are derivatives of ammonia in which one or more of the hydrogens of the ammonia is replaced by a hydrocarbon radical. They are primary (MONO-), secondary (DI-) or tertiary (TRI-) amines according to the number of hydrogens replaced. When placed in water they react with it to form the corresponding hydroxides and they react with acids in the same way as ammonia does. The resulting hydroxides and salts in turn react with other salts in aqueous solutions as do the ammonium salts. Amines are classed as cationic collectors. The designation is accurate when the collecting reaction is one of ion exchange with the hydroxide or salt, as is the case with the so-called nonmetalliferous minerals; it is erroneous when the amine acts as a collector for the heavy-metal (METALLIFEROUS) minerals (see p. 15).

Cationic collectors are used principally at present (1943) for flotation of silicate minerals, including quartz. Recent laboratory work (*CU*) indicates their utility for tungstates, molybdates, vanadates, chromates, and arsenates, from which it may be concluded that they should be effective generally for salt-type minerals in which the acid ion contains a metallic atom. They are also broadly useful for nonmetallic minerals, when used with a conditioner comprising an anion common with that of the mineral to be floated (*A TP 1685*).

α-Naphthylamine was used for a number of years for flotation of copper sulphides; there is little or no use of amines in sulphide flotation at present.

Reactions of cationic collectors with nonsulphide minerals is metathesis of the same type as occurs with anionic collectors (Art. 3) except that the cation of the mineral is displaced by the hydrocarbon-bearing cation of the collector.

Abstractions of laurylamine by quartz and by scheelite have been made at Columbia; in the case of the latter mineral it was found that calcium ion was thrown into solution by the reaction. Precipitation tests have shown a precipitate when laurylamine hydrochloride solution was mixed with solutions of silicate ion (*RI 3333; RI 3557; CU*), with all of the metal-acid ions above listed (*CU*), and with carbonate, sulphate, chlorplatinate, and chlorcuprate (probably) (*CU*). In several cases where precipitation occurred, contact angles were obtained with a mineral containing the precipitating ion. Scheelite, barite, and calcite were floated by laurylamine hydrochloride.

Collecting reaction of amines with quartz appears to consist in preliminary formation of a silicic acid film at the particle surfaces according to some such equation as $SiO_2 + H_2O \rightleftharpoons H_2SiO_3$, followed by reaction with the amine hydroxide, thus $RNH_3 \cdot OH + H_2SiO_3 \rightleftharpoons (RNH_3)\ SiO_3 + H_2O$ (equation purposely unbalanced; see p. 05). Existence of the acid coating with the silicate ion adherent, prior to the introduction of amine, is indicated by

the fact that quartz is in Brownian movement in distilled water (Sec. 15, Art. 3). The amine stops the movement and is abstracted from solution.

Solubility of amine salts is not, in general, as low as that of the xanthates or oleates. Hence it is normally necessary in amine flotation to increase the concentration in solution of an ion common to the coating compound in order to effect good collection (Art. 7). The order of solubilities and the general magnitude follow: Molybdate, vanadate < silicate < $2.5 \cdot 10^{-4}$ mols per liter < carbonate, tungstate, chromate, phosphate < $7.5 \cdot 10^{-4}$ mols per liter < thiosulphate < bicarbonate, sulphite, dibasic arsenate < $12.5 \cdot 10^{-4}$ mols per liter < sulphate < $25 \cdot 10^{-4}$ mols per liter < fluoride, borate, chloride, sulphide, monobasic phosphate > $25 \cdot 10^{-4}$ mols per liter (*A TP 1685*).

Collecting reaction of amines with heavy-metal sulphides apparently results (*153 A 517*) in the formation of a metal-amine compound in which the metal and amine constitute an amine-metal complex ion similar to the metal-ammonium ions. Laurylamine is a collector for all of the metallic minerals tested which form water-stable co-ordination complexes with ammonia (Cu, Pt, Ag, Zn, Ni, Cd, Fe″, Sn) and is not a collector for those tested which do not form such water-stable ammonia complexes (Mg, Al, Pb).

The reaction would appear to comprise displacement of "aquo" (or, in some cases, of an "ol" or "oxo" group [A. W. Thomas, *Colloid chemistry*, McGraw-Hill, N. Y., 1934]) from the hydrated ion of a compound of the metal occurring at the surface of the mineral, *e.g.*, $[Cu(H_2O)_4]\ SO_4 + xRNH_2 \rightleftharpoons [Cu(RNH_2)_y(H_2O)_{4-y}]\ SO_4 + yH_2O + (x - y)\ RNH_2$, where y is an integer from 1 to 4 and $x \geq y$.

Contact angles for laurylamine with heavy metals is 85 to 90°; for nonmetallic minerals the angle with laurylamine hydrochloride is 60° ± 5. The indication is that the metal-amine complex ion contains at least two of the amine groups. Complex metal-ammonia ions may (with the exception of those of H and Ag) contain less than the full complements of NH_3, and, presumably, of RNH_2 (*Hammett*). The magnitude of the contact angle with a given hydrocarbon group in the coating ion is, in general, a measure of the surface concentration of the coating ion (Art. 7). Silver gives an angle in the 85 to 90° range and its ammonia co-ordination number is 2. There is some evidence (Gaudin and Vincent *A TP 1242; CU*) that with nonmetallic minerals the number of amine-ammonium-type ions per acidic ion of the mineral lattice is one. Such an explanation would account for the difference in contact angles cited.

When an amine salt is used as a collector for a sulphide, it functions by reason of the free amine present according to the equilibrium, *e.g.*, $(RNH_2)Cl \rightleftharpoons RNH_2 + HCl$.

Flotation of galena with amine collectors would run counter to the metal-amine-ion hypotheses set down here. Such flotation with commercial amine collectors is possible. Baker (*A TP 1585*) has shown, however, that with pure α-naphthylamine no flotation of galena occurs, although good flotation was effected with the commercial material before purification, and that the extent of flotation decreased as purification progressed. When, therefore, flotation of sulphide minerals containing heavy metals not on the list of those that form water-stable ammonia complexes is effected, as not infrequently occurs, either of two explanations is probable, *viz.*, that the sulphide has become activated (Art. 7) by some metal or acid ion that reacts with amine-bearing ions to form collector coatings (*e.g.*, Cu or Ag, or silicate or carbonate; *112 A 303, 398*), or that the amine reagent contains fatty-acid amine soap. The latter is almost invariably the case with the higher aliphatic amines unless they have been most carefully purified.

Christman *et al.* (*U. S. pat. 2,278,060*) describe collectors comprising the products of reaction between polyalkylene polyamines and fatty acids, such products being amines or esters of the general formula $\overline{Y} \cdot CO \cdot NH \cdot A \cdot Z$, in which A = 2 or more CHR—CHR′—NH— groups in series, $\overline{Y}$ is an aliphatic chain of 9 or more carbon atoms, and Z is H or an acyl radical of an aliphatic acid of 10 or more carbon atoms or the acid salt of such a compound.

Jayne *et al.* (*U. S. pat. 2,336,868*) describe thioureas of the general form $HN : CSR \cdot NHR'$ in which R′ is hydrogen or an alkyl, aryl, aralkyl, or alicyclic radical or one of the type $—CNH_2 : X$, where X is NH, O, or S; and R is preferably an alkyl radical of 8 to 32 carbon atoms, *i.e.*, a sufficient loading to prevent tautomeric shift with an amine hydrogen (see *Thiocarbanilid*, Art. 3). They recommend these for flotation of silicate minerals from nonsulphide nonsilicate salt-type minerals, particularly phosphates.

-Onium collectors are those in which high-valent nitrogen, sulphur, or phosphorus forms the connector between a hydrocarbon-loaded cation and an anion. The nitrogen compounds are either analogs of the inorganic ammonium salts in which the H atoms of the ammonia radical are more or less completely replaced by hydrocarbons, *e.g.*, R_4NA, where the four R groups may be the same or different, and A is usually a halogen; or ring-type compounds in which a part of the carbon loading of the nitrogen is the ring, *e.g.*, pyridinium, 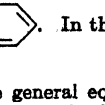 . In the sulphonium compounds S is tetravalent, so that the compounds have the general equation R_3SA. In the phosphonium salts the phosphorus is pentavalent, and the salts have the general formula R_4PA. In general, in this class of collectors, at least one of the R's is C_{12} or greater.

Isourea compounds of the type $R—O—\underset{\underset{NH}{|}}{C}=N\cdot HX$, where X is an acid ion, are said to be collectors for silicates when R is a C_{12} to C_{18} aliphatic radical (*U. S. pat. 2,205,503*). The patent further asserts that the compound floats fluorite from silica and sphalerite from its ores.

Aldoximes (R=NOH) are either acidic, *i.e.*, reacting by displacement of H by a base, or basic, reacting by addition, as ammonia, with acids. Heptaldoxime is reported (*ibid.*) as a collector for talc; here the reaction should be typically cationic in acid solutions. Erratic success has been attained at Columbia with cupferron ($ON\cdot C_6H_4\cdot NH\cdot ONH_4$) as a collector for cassiterite and for hematite, where the collector reaction should be with the cation.

Curiosities. Organic base (tetrammonium, pyridinium, etc.) salts of fatty-acid glycollic esters are described as collectors (*U. S. pat. 2,177,985*). In so far as these are soluble, they will free ions which are collectors, respectively, for silicate, and heavy- and earth-metal ions. They should float the earth itself, if sufficiently subdivided.

Use. Few reliable data are available as to commercial use of cationic collectors. Laboratory work is described in a considerable patent literature and in a number of publications of the U. S. Bureau of Mines. On the basis of these the following generalizations are indicated. (1) The silicate minerals may be grouped, so far as cationic flotation is concerned, as readily floatable, moderately floatable, and difficultly floatable. The readily floatable comprise talc, the secondary micas and sericites, kaolin, silicate-type slimes, and the like highly hydrated forms; the moderately flotable include the primary micas, zircon, kyanite and the related group, and slightly altered granular silicates generally; the difficultly floatable are quartz and the unaltered granular silicates. (2) The collectors may be classified as to floating capacity roughly on the basis of solubility in water, such capacity increasing with decrease in solubility, which, in turn, is in inverse relation to the carbon loading. Increased carbon loading may be effected either by increase in substitution or increase in carbon content of substituents, or both. In general, attainment of a given carbon loading in an unsymmetric amine imparts higher flotative capacity than when the same total carbon loading is effected symmetrically. (3) Collectors of low flotative capacity may be used for the readily floatable silicates; reagents of high capacity must be used for those difficultly floatable. For readily floatable silicates di- and tri-alkyl amines of 8 to 15 carbon atoms are best; for the moderately floatable, amines of 12 to 18 carbon atoms with most of the carbon in one or two substituents should be used; for quartz and the difficult silicates use amines, tetrammonium, or pyridium and like compounds with one substituent at least of 16 to 18 carbon atoms. This classification is not to be accepted as tested and reliable; it is, however, reasonably in accord with the scattered data available (1942). No such information is available as to the salts of metal-acid ions or for the sulphides that are floatable by cationics.

Cole (*U. S. pat. 2,340,580*) describes the use of DP 243, fortified with fuel oil, in a pulp made strongly acid with H_2SO_4, and with pine oil as a frother, to remove iron impurities from a deslimed glass sand; reduction in iron content to <0.02% is asserted.

Adoption of cationic flotation is largely a question of cost. In many cases of nonsulphide flotation the bulk of siliceous impurity is relatively small and flotation thereof instead of flotation of the large bulk of nonsiliceous mineral is desirable from an operating standpoint. But the relatively large quantity of collector necessary (averaging 1 lb. per ton upward), the relatively high price, and patent royalties have tended to make anionic flotation the economic choice (1943).

Choice of cationic collectors is first a matter of fitting the general class to the type of mineral to be floated, and thereafter choosing largely on the basis of least unpleasant frothing characteristics and price. All cationic collectors are surface active; in slimy pulps they tend to form voluminous persistent froths that cause difficulty in product thickeners and thus add to operating costs. All of them are relatively expensive, both from the chemical and patent-licensing standpoints. None of them makes the clear-cut selections that prevail in sulphide flotation. All, as manufactured commercially and sold, are likely to contain more or less large residues of the fatty acid starting materials, and this residue will tend to float sulphides as well as heavy-metal and earth-metal nonsilicate minerals over and above those floatable by the cationic reagent itself.

The problem is further complicated from all angles by the present practice of marketing the reagents under trade names and keeping identities secret. Many of the different trade names describe the same substance as prepared by different manufacturers or the same substance in different degrees of impurity as made by the same manufacturer. The sooner buyers refuse to purchase on the trade-name basis, and demand warranties as to content of cationic chemical and anionic contaminants, the more quickly cationic flotation will get onto a stable operating basis.

Trade names. The following data, compiled from various sources, are of some aid in interpreting otherwise unintelligible Reports of Investigations.

AM, followed by a 4-digit number, indicates and describes an *AM*ine, manufactured by Armour & Co. (*PC*). The first digit is 1, 2, or 3, denoting respectively a primary, secondary, or tertiary amine. Digits two and three together denote the number of carbon atoms in the substituent, *e.g.*, 18 (eighteen), 08 (eight). The fourth digit, 0, 1, 2, etc., denotes the character of the substituent as regards degree of unsaturation, *e.g.*, 0 = no double bonds, *i.e.*, saturated; 1 = one double bond; 2 = two double bonds. Letters in place of the four digits indicate a mixture of the fatty acid chains naturally occurring in the oil indicated, *e.g.*, Coco = coconut oil. If no letter follows the four digits, a C.P. (chemically pure) product is indicated; an A appended indicates technically pure; B denotes a mixture of C.P. amines, one of which has the character indicated by the digits; C indicates a similar mixture of technically pure amines. Thus AM 1180 is C.P. *n*-octadecenyl amine; AM 1181-A is T.P. *n*-octadecenyl amine; AM Coco-C is a mixture of technically pure amines corresponding to the fatty acids normally occurring in coconut oil.

DP, followed by a letter or number, denotes a DuPont product. The following are the principal cationic collector types (*PC*).

DP 243 is a 50% aqueous paste of Lorolamine (see below) hydrochloride.

DPQ is lauryl trimethyl ammonium bromide.

DPQB is DPQ of technical grade.

DPC is cetyl linked to a carbon of a betaine (*18 Bul A Cer S 286*).

DPN is stearyl linked to a nitrogen of a betaine (*ibid.*).

DPLA (Duponol retarder La) is technical stearyl trimethyl ammonium bromide.

Lorol is a mixture of primary straight-chain alcohols, about 18% C_8, 10% C_{10}, 55% C_{12}, and 17% C_{14}.

Lorolamine is the mixture of amines produced from Lorol; it contains less than 5% combined secondary and tertiary amines.

DLT series numbered as below are condensation products of ethanol amine and higher fatty acids: 100, 101, 466, 521, 555, 652, 653, 655, 672, 683, 692, 693–696, 698, 698-B, 699, 907, 958, 1001–1006, 1008, 1009, 1041, 1042 (W. Kritchevsky, 1401 W. Jackson Boulevard, Chicago).

Emulsol: Wetting agents by Emulsol Corporation, New York. K-1249, 1339, 1340 are quaternary ammonium compounds with aliphatic substituents. 660-B, 660-C, S-831, 903, 903 L, 1336 are pyridinium salts. 1950-A is a cationic of unknown class.

Ninol 517, 521, 57A are condensation products of alkylol amines and higher fatty acids (*18 Bul A Cer S 286; U. S. pat. 2,173,909*).

Sapamine MS. Cationic; class unknown.

Quantity of cationic collectors necessary is usually of the same order as that of the soaps, except in the case of -onium reagents with a long alkyl group. The reason is that the solubilities of the surface reaction products are relatively high and that the concentration of the coating ion (or of the acidic mineral ion) in solution must be raised sufficiently to cause precipitation. The law of mass action governs the coating precipitation. In general, in metathetic coating, it will be cheaper to add the acidic ion common with the mineral surface, *e.g.*, $SO_4^=$ for barite, silicate for silicate minerals, and the like (*A TP 1685*). Failing this, surface coating with smaller quantities is partial only and contact angles are lower than the maximum for the particular collector. Excess tends to cause depression.

Wark and Wark (*143 N 856*) report that cetyl trimethyl ammonium bromide becomes micellar at higher concentrations and that its collecting power thereupon ceases. Their contact-angle tests (*39 JPC 1021*) indicate that the depression is due to an effect on the bubble, probably the formation of a solid skin such as is formed by excess soap (Art. 4), which resists the displacement necessary in order to permit the coated solid surface to break through to the air. Depression is accompanied by excessive frothing, as is also the case with soap.

Conditioning for cationic flotation. So far as collection itself is concerned, it is controllable within limits by changes in concentration of the reacting ions according to mass-action concepts. Whether mass-action laws prevail in the reaction zone at the particle surface is not known, but evidence points to this conclusion (*CU*), and for the purpose of practical control under mass-action considerations the pulp liquor itself may be taken as the reaction zone.

In general, results are better, and a given collector is more effective on the acid side (talc results, *U. S. pat. 2,196,724*), but this is, in many cases, due to the low solubility of the free base. Acid pulps are frequently used to depress nonsilicates in cleaning; the effect is often due to the higher solubility of such salts in acid solutions. Alkali should aid in floating readily floatable from difficultly floatable silicates by lowering the concentration of amine ions. The quaternary ammonium compounds are not affected by hard water (*RI 3335*), but *RI 3419* states of cationics generally that they are sensitive to soluble salts and to slimes. Emulsol 660-B is not affected by moderate amounts of $CuSO_4$, $ZnSO_4$, $Pb(NO_3)_2$(*RI 3335*). An inorganic salt of a polybasic acid is recommended in flotation of quartz with tetrammonium and sulphonium salts. Aluminum salts are reported to aid cleaning (*RI 3558*). Quartz is reported to float best at pH 7.5 to 7.8 with tristearyl ammonium bromide; lead acetate and NH_4OH are the best modifiers (*18 Bul A Cer S 286*).

Oil aids in collection with cationic reagents when weak (low-C) reagents are used. The action, as is discussed in Art. 3, is solution-coating of hydrocarbon-coated surfaces

which have low water-repellent property but sufficient oil-water selectivity to cause oil to spread on them. The surface presented for bubble attachment is a neutral hydrocarbon surface which does not require orientation, if sufficiently thin to have lost its liquid character.

Frother used with cationic collectors is frequently important. Pine oil, with the tendency to make brittle froths, will usually correct, more or less, an overfrothing tendency on the part of the collector, but tends to float nonsilicates, if any fatty acid is present in the system. The higher alcohols have less corrective tendency as to overfrothing, but they float accidentally oiled material less readily. Cresol may carry more or less carboxylic acids and neutral oils, which tend to float nonsilicates.

6. OILY COLLECTORS

Definition. The phrase OILY COLLECTORS is used herein to designate oily liquids which are good solvents for hydrocarbons; which are substantially insoluble in water; which, when spread out thinly at solid surfaces, will cause bubble attachment thereto in the presence of water; and which do not, of necessity, contain ingredients capable of effecting reaction coating of minerals, although such materials may be contained. Oil such as this is best typified by the neutral hydrocarbon liquids of petroleum and of wood and coal tars, with boiling points upward of 350° to 450° F, and viscosities low enough, at ordinary atmospheric and pulp temperatures, to permit uniform feeding and ready dispersion in the pulp. It is desirable, also, that such an oil lack frothing power.

Oils normally employed are the lighter fuels, *i.e.*, kerosenes, gas oils, and cut-back cracking-still tars; and the wood- and coal-tar creosotes. The latter are available with varying quantities of tar acid, *e.g.*, BARRETT #4 contains 25% tar acid, BARRETT #410 slightly less, and BARRETT #634 is substantially all neutral oil. Frothing capacity increases, of course, with the tar-acid content. Specific viscosity should not be greater than 2.5 at the temperature of use, or dispersion will be difficult and the oil will tend to film too thickly. A pale neutral dewaxed distillate (26 A.P.I.) from a paraffin-base crude, with a viscosity of 100 to 115 sec. Saybolt Universal, is used at CLIMAX (*A TP 1675*). This is equivalent in action to the refined white oils of the Nujol class.

Use. Oils are invariably used as auxiliary collectors in table flotation, the reason being that the frosting of small bubbles attached in the thick-pulp conditioning and subsequent cascading onto the table must survive handling that tends to brush them off. Such bubbles should, therefore, make large contact angles with the particles. Contact angles with surfaces thinly oiled with neutral hydrocarbons are upward of 90°; these tend to spread further rather than to be peeled off when they are pushed around at surfaces.

Oils are also used in froth flotation with carboxylic collectors in order to escape the necessity for accurate control of *p*H. With cationic collectors, particularly those with small carbon loadings, oil is a marked aid, since it makes a much larger contact angle with the chemically coated surfaces than air does, and, thereafter, aids air-bubble attachment, as above described. Oil should not be used, however, when differential flotation is sought between two or more minerals all more or less reaction-coated by the same collector.

Oil is used in flotation of oxidized metalliferous ores to intensify floatability of the oxidized minerals. It has the further effect of conserving chemical collector by closing off lightly coated surfaces against continued deeper reaction. It is also used in flotation of oxidized gold ores, where intensification of levitation to the maximum possible is the desideratum.

Quantity of oily collector necessary depends upon the conditions affecting dispersion. If an oil is reasonably mobile, or is used in a machine employing strong agitation, or oiling is done in a thick pulp, and the pulp is, in each case, relatively free of slime (Art. 7), 0.5 to 1 lb. of oil per ton of feed is the maximum that will be needed; under unfavorable converse conditions several pounds per ton may be necessary and selectivity will be poor.

Reconstructed oils are oils that have been refluxed with sulphur at temperatures sufficient to cause reaction therewith. Mercaptans are always formed, whereupon the oily mixture takes on collecting power for heavy-metal minerals because of the coating reaction with the mercaptan.

CONDITIONING

The essential prerequisite to separation by flotation is selective collector-coating. The necessary implication is that one mineral species shall be subject to such coating while all other species present are not. It is the function of conditioning either to insure this state of affairs or to take such steps as will compensate for departure therefrom.

Necessity for conditioning becomes apparent quickly when it is considered that collection, in the case of all but the inert minerals (Art. 54), involves selective chemical reaction between a minute amount of the highly reactive collector and the surface material of particular solid particles in a pulp which comprises a highly complex aqueous solution, a suspension of solids more or less closely related chemically to the solid with which reaction is desired, and a miscellany of extraneous solids of highly varied character. The solutes are those present in the original water supply, others derived from the ore with which this water is in present contact, possibly others retained from prior contacts with ore undergoing flotation or other treatment (*e.g.*, cyanidation), extracts from extraneous vegetable and animal matter, etc. The suspended matter, other than the ore minerals, comprises inorganic precipitates formed by reaction between dissolved ore-mineral ingredients, and undissolved organic residues, of which the most important usually is lubricant picked up by the ore in its travels to the cell, but occasionally is humic matter from decayed and decaying plant life. Many of these ingredients are capable of chemical and physical reactions and interactions between themselves and with the collector; interparticle reactions modify the original particle surfaces; collector reactions may result in collector consumption without any coating being effected, or may cause it to coat in the wrong places, or both. Control of this locale is one of the most important operations in the flotation process from the standpoint of economics. Given a suitable collector in unlimited quantities, plenty of time, and no limitations on recovery and grade of concentrate, it is almost impossible to prevent concentration of a sort whenever a pulp is subjected to suitable levitation and frothing conditions. But collectors are expensive, collection time and machine capacity vary inversely, low recovery means that money which has been expended for mining, crushing, and grinding is thrown on the tailing pile, entirely apart from possible profits lost, and low-grade concentrate means money gifts to the railroad and the smelter. Conditioning determines the state of the particle surfaces and the ion content of the pulp water, and is so regulated as to bring about the maximum of desirable selectivity at minimum expenditure of time and money. Its importance may be judged from the fact that 0.1 mg. per li. of copper ion will activate sphalerite (*87 A 417*), grinding in an iron mill activates quartz, and a minute amount of fatty acid, such as is picked up in the mine lubricants, will hinder and may prevent depression of sphalerite by cyanide.

Definitions. The steps taken in practice to cope with the difficulties outlined above are almost as varied as the difficulties stated and implied. Some grouping is, however, possible. Thus treatments directed specifically toward procurement and maintenance of an effective collector-coating on the desired mineral are called collectively ACTIVATION. Those directed toward prevention of entry of undesired minerals into the overflow are grouped under the name DEPRESSION. Further classification has not yet been effected; the various further operations, which include protection of collector from chemical destruction; maintenance of pulp conditions most favorable to the reactions of collectors, activators, and depressants; maintenance of good frothing conditions, etc., are referred to specifically in the art by naming either the operation, the function, or the reagent, and this practice is followed herein.

It should be noted that perhaps the most informative reading for the flotation experimenter, and for the operator treating complex ores, is the literature of chemical analysis, particularly that which deals with the use of organic precipitants and specific indicators.

Conditioning time. Since conditioning comprises chemical reactions in solutions of very low concentration, and relatively close approach to equilibrium is necessary in many cases, sufficient time must be allowed. Conditioning times in the plants, which, on the average, represent the result of reasonably thorough investigation, vary from a fraction of a minute (reagents added in the cell or feed launder) in easy single-mineral flotations with soluble reagents to 5 or 10 hr. for difficult operations (secondary zinc at MIDVALE; *IC 6492*). The usual times in zinc-lead work are ±5 min. in the lead-circuit conditioner and 15 to 30 min. in the zinc conditioner. Both recovery and reagent consumption are unfavorably affected by less than optimum times. Order of addition of conditioning reagents may have important effects on necessary time and reagent consumption; the probable reactions should be postulated and additions made in the order that will favor them.

On the contrary, conditioning time may be too long, resulting in deterioration of recovery and/or grade of concentrate; for this reason, once the optimum time has been determined arrangements should be made to hold time as nearly constant as possible.

Conditioning tanks are designed to give conditioning time-factor and to disperse reagents, at the same time maintaining pulp solids in suspension. If time-factor is short, an agitation-type flotation cell is probably the cheapest and most satisfactory machine. Otherwise a round tank with means for causing circulatory flow of sufficient velocity to prevent sedimentation is best. For coarse pulps the tank should be relatively small, on account of the vigorous agitation necessary to maintain suspension, and long time-factor

must be attained by repetition of treatment in successive tanks. Successive tanks are also necessary when order of addition of reagents is important. With fine pulps large tanks and slow circulation, as by slow sweeps, will serve, the principal consideration in this case being dispersion of reagent. The grinding circuit is an excellent place for conditioning when circumstances permit, but addition of frothers and even of collectors here will result in discharge of considerable tramp sulphide from the classifier which may not float under the more vigorous agitation in the flotation cells.

Conditioning in thick pulps decreases time-factor because of the greater reagent concentration; reagent consumption may also be less, particularly with oily reagents.

Devereaux agitator (Fig. 1*a*, item *A*) is satisfactory for pulps that are not too quick settling. Propeller is upthrust type.

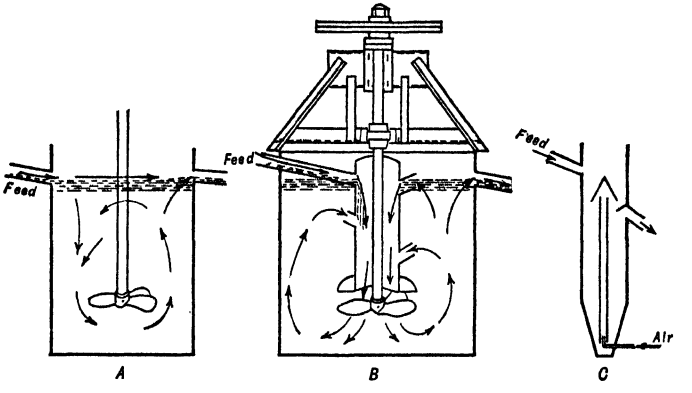

FIG. 1*a*. Conditioning tanks.

At PECOS (*IC 6605*). 8(diam.)×12-ft. Devereaux tanks had 30-in. impellers at about 3 ft. from the bottom, driven 148 r.p.m. Tendency to sand-up was overcome by bolting an 8×8-in. riser to the inside wall, with bottom about level with the agitator and discharge through the tank wall at 11 ft. above the tank floor. The sand that tends to stratify at and below agitator level is thus trapped off and lifted by the accelerated current caused by rising flow of the entire pulp stream through the small conduit.

Denver conditioner (Fig. 1*a*, item *B*) has a central column above a downthrust impeller. The inlets in the wall of the column are to accommodate coarser sands that might otherwise not circulate, or would circulate slowly.

Coarse pulps must be thick or some positive means of circulation must be provided. The usual method is to cone the bottom of the tank and then use an air lift (Pachuca-type tank, Fig. 1*a*, item *C*), or discharge the pulp from the tip of the cone through a spigot and thence to a sump supplying gravity feed to the suction of a sand pump.

At ENGELS (*IC 6550*) a tank-and-pump circuit served both for surge and conditioning. The tank was 20(diam.)×10-ft. with a 2-ft. central cylinder, the bottom 2 ft. above the bottom of the tank. A 6-in. centrifugal pump took suction on the bottom of the tank and discharged to a launder feeding the top of the well. Working range of pulp in the tank (surge) was about 3 1/2-ft. depth of pulp. Change in level changed conditioning time and was controlled by a splitter in the feed launder, which varied the proportion of return to the tank. Pump elevated 20 ft. and consumed 11 1/2 kw., chargeable against a feed of 1,000 t.p.d.

7. ACTIVATION

General principles. The hindrances to effective collector-coating are both physical and chemical in their nature. It has been found that for a coating to be useful to cause bubble attachment it must be like-oriented, hydrocarbon-end-out from the particle surface (Art. 3). For coatings caused by chemical reaction this implies a monomolecular film (MONO-COATING). If reaction proceeds beyond this, by penetration of the primary film by collector ions, the original lattice arrangement of the coated solid, which held the collector film in the desired position (Fig. 1), is changed, and the components of the film rearrange themselves into a multimolecular film (MULTI-FILM) in which their own crystalline conformation prevails. This normally results in a surface in which polar and nonpolar elements alternate. Air bubbles do not attach to such surfaces. Such multi-films occur in coating relatively soluble mineral surfaces, particularly with small collector ions. The

remedies are either to reduce surface solubility of the mineral prior to coating (see ***Sodium sulphide***, Art. 10), to rub the thick coating down to a monomolecular film before attempting levitation (see ***Attrition mixing***), or to stop the formation of the multi-coating by covering the early mono-film with oil as fast as it forms (Art. 6).

Surfaces that are adequately collector-coated frequently do not attach bubbles. Under such conditions examination usually reveals the surfaces covered with a layer of fine discrete solid particles. The difficulty is a matter of accessibility. It is as though attempt were made to bring a monster balloon (the bubble) into contact with blades of grass (the collector coating) carpeting the floor (the mineral surface) of a forest of tall trees (the small solid particles). Remedies are to prevent the slime coating or to remove it by attrition.

The COLLECTOR-COATING SALTS (reaction products of the collector ion and a mineral ion) of different minerals vary considerably in solubility. The zinc salts of the sulphydric acids are outstanding examples of high solubilities. It is frequently possible to resurface such minerals with ions which yield collector-coatings of low solubility, thus activating the underlying minerals for collection by reagents otherwise ineffective for them (see ***Resurfacing***).

Slimes in an ore pulp are loosely defined as the fine fraction that overflows a desanding separator. Such material, however, contains a major percentage of fine granular material which constitutes ideal flotation feed. It is only the small percentage, fine enough to remain suspended more or less indefinitely in a suitable pulp solution, which ever causes difficulty in flotation. This material, frequently characterized COLLOIDAL SLIME, may be either sulphide or nonsulphide, but is usually of talcy, clayey, or limonitic nature. Its principal offenses are: consumption of reagent, overfrothing, contamination of concentrate, reduction in recovery.

Consumption of reagent by slimes is not serious in extent in sulphide flotation, although a few plants report the necessity for more frother or collector or both when colloidal slimes are present. But in nonsulphide flotation, whether with soap, or with cationic collectors, with or without fortification by oil, colloidal slimes usually consume excessive quantities of such collectors, amounting in some cases to many pounds per ton. Consumption of the reactive collectors is, of course, by chemical reaction and collector coating, as a result of which the slime goes into the froth. The action with oil is coating of the droplets, which are thus stably emulsified, and armored, not only against coalescence with each other, but against their proper functions of smearing the granular material to be floated (Art. 6), or forming selecting interfaces in the bubble column (Art. 19). At EAGLE PICHER it was found (*Q*) that when talcy slimes appeared, more soda ash was required, while increase in limonitic slime increased frothing-agent requirements.

Overfrothing. See Art. 12.

Contamination of concentrate by slimes occurs primarily in nonsulphide flotation when the slime, flocculated and more or less collector-coated, floats. There is minor contamination, both in sulphide and nonsulphide flotation, by dispersed slime carried in suspension in the water, and by reason of slime coating of granular material that is floated despite the coating (see *post*).

Reduction in recovery by slimes occurs in a number of ways. Slime coating (*post*) of granular material otherwise floatable may occur to such an extent as to prevent bubble attachment. Handy (*PC*) states that almost any primary slime in ordinary mill water consists of gelatinous floccules, which when dispersed, as by sodium silicate, drop out very fine sandy material that is readily treated by flotation after removal of the dispersed colloidal material. He recommends such treatment, particularly for oxidized metallic ores. Gaudin and Malozemoff (*112 A 303*) have found that pure sulphide minerals ground excessively fine will not float under the same conditions that are effective to float the same sulphides in granular form. They state that the remedy is to add collector in the grinding circuit, but this is not generally effective in the mills; the only known palliative is to reduce the amount of overgrinding. Prevention of oiling and loss of selecting interface, discussed *ante*, also reduce recovery. Slime is very slow floating.

Slime-coating is caused, on the basis of the available evidence, by at least two different mechanisms.

Cementing hypothesis. Del Giudice showed (*112 A 398*) that certain cases of coating, *e.g.*, calcite slime on galena, were accompanied by an exchange of ions in solution in the pulp, carbonate ion leaving and sulphate ion appearing. This indicates reaction at the galena surface resulting in the formation of lead carbonate, which del Giudice postulated to act as a binding cement between the calcite particles and the galena mass. This postulate was strengthened by the showing that reagents which tended to CLOSE (render less soluble) THE SURFACES of either or both of the minerals, *e.g.*, silicate, sulphide, carbonate, or ethyl-xanthate ions, decreased or prevented coating.

Flocculation hypothesis. Bankoff (*153 A 473*) observed that when conditions in a pulp favor complete flocculation, the granular particles become slime-coated. It had already been shown (*87 A 217*) that when pulp solids are dispersed they are in Brownian movement and that the conditions in the pulp are such as to produce at the particle surface a compound having a bulk solubility of 0.5 to 15 or 20 mg. per li. Fitt *et al.* (*153 A 493*) have shown that under such conditions the dispersed particles, with one of the ions of the postulated coating, will, in an electrical field, migrate to one pole while the other ion migrates to the other pole, and that removal of the ion that travels with the particle, as by filtra-

tion through a collodion sac surrounding the pole, results in flocculation. Dispersion never occurs without such charging. Hence the condition for dispersion is the combination of anchored and free-swimming ions. Surface compounds too soluble to permit anchorage produce flocculation, as do also coatings too slightly soluble to permit a suitable atmosphere of surrounding free-swimming ions. Observation of slime pulps under a microscope, under conditions that permit control of the chemical atmosphere, show that the particles in a thoroughly dispersed pulp never make contact with each other, despite their continuous darting movements, but that when Brownian movement is stopped, either by oversolubilising or closing the particle surfaces, the particles, moving along in liquid currents, contact and adhere, *i.e.*, flocculate. Conditions in Bankoff's experiments, in so far as they were traced out, showed that slime coating corresponded to failure of Brownian movement which occurred in pulp atmospheres that produced relatively soluble or highly insoluble particle surfaces.

Ionic hypothesis. Sun (*153 A 479*) revives Ince's hypothesis (*87 A 261*) and, on the basis of cataphoretic estimates of ionic zeta potentials, concludes that slime coating is heavy when the potentials of granular particle and slime are high and of opposite sign, and/or when the potential of the slime is low; that the coating is light when the potential of the slime is high and that of the particle low, or when both potentials are high but alike in sign.

Reagents used to prevent slime coating are acids, alkalis, alkaline silicates and phosphates, and the organic colloidal dispersants. Their various reactions are discussed sufficiently under the specific reagent headings to indicate the line of attack in particular cases.

Remedies for slime difficulties, other than those already discussed, are separate sand-slime treatment (Art. 35) of the pulp to effect dispersion of the slime particles, and desliming. The last, with discard of the slime, is solely a question of economics; it is frequently advisable in nonsulphide flotation and almost never so in sulphide treatment, except, perhaps, very light desliming of the kind practiced at BUNKER HILL & SULLIVAN (Sec. 2, Fig. 108).

Attrition mixing is mechanical treatment of a pulp designed to rub particle surfaces with sufficient vigor to detach slimes and other relatively gross loosely adherent coatings such as films of mineral-alteration products and collector-coating multi-layers. The essence of the procedure is thick pulp (>60° solids) and vigorous mechanical agitation as in a lightly loaded tumbling mill or the beater box of an agitation-froth machine. Power consumption and maintenance are relatively high, but in many cases the alternative chemical treatment is even more costly. The action is aided by addition of a dispersant.

An alternative to attrition mixing, particularly if the slime coating is selective, is to treat the coated mineral as though it were of the composition of the coating, and collect with a suitable chemical collector fortified by a neutral oil.

Attrition mixing aided separation of talc (*140 #12 J 39*) and spodumene (*148 A 347*) from other nonmetallic minerals. It is asserted (*U. S. pat. 2,216,040*) that a sequence of steps comprising desliming, mechanical polishing, as in an agitation-froth beater box, and thorough secondary desliming in a hydraulic classifier aids flotation of quartz from pebble phosphate.

Resurfacing comprises production at the surfaces of specific classes of minerals of surfaces of a different nature. It may be intentional, and directed either toward activation or depression, or it may be the concomitant of accidental presence of some ingredient in the ore or water supply.

Resurfacing for activation is a common practice. The best known example is, perhaps, the addition of copper sulphate to resurface sphalerite. Copper ion exchanges with zinc and produces a surface of copper sulphide which, if the reaction is permitted to proceed, assumes the nature of covellite (*87 A 417*). In general any ion will resurface any mineral if it forms with an ion available at the mineral surface a compound less soluble than the original surface. The solubility difference must, however, be relatively large for resurfacing to occur in the short time usually available in a flotation operation and with the relatively low ion concentrations prevailing. Possibilities for sulphide resurfacing may be estimated from the following list of increasing sulphide solubilities: Hg, As; Ag, Sb; Cu; Pb, Sn, Bi; Zn; Fe, Co, Ni; Mn.

Precipitation resurfacing is, of course, aided by increasing concentration of the resurfacing ion in solution. Hence, when minerals are close together in the above list, the normal resurfacing may be reversed by using a high concentration of the ion yielding the more soluble sulphide. Thus Sutherland (*153 A 453*) reports resurfacing of chalcocite by lead. Activation of this character occurs whenever mixed sulphide ores are ground. Sutherland also reports that the effectiveness of activants for sulphides is dependent to a degree on the mineral and is chalcopyrite > sphalerite > pyrite with Cu, while with Ag it is sphalerite > chalcopyrite > pyrite. He reports further that Pb as a sulphide resurfacer produces galenalike surfaces which are not depressed by cyanide.

Oxidation and reduction. Less well recognized, because they occur as necessary sequelae of the processes of preparation, are oxidation and reduction reactions effected by other ingredients of the pulp, and secondary effects which flow from reagents added primarily for other purposes. Examples are developed in the consideration of the actions of specific reagents.

General principle in intentional resurfacing for activation is to anchor at the surface of the particle to be floated an ion which will be open to collector reaction and will form with the collector ion an effective collector coating less soluble and hence more susceptible to levitation than would have been formed with the unaltered mineral. Hence the collector to be used determines the nature of the resurfacing, or the kind of resurfacing possible sets the kind of collector that must be used.

Resurfacing agents for use with anionic collectors are the salts of heavy and earth metals; silicate ion and the metal-acid ions are used with cationic collectors.

Excess of resurfacing ion in the pulp precipitates more or less of the collector ion, according to the solubility product of the two ions. Wark and Cox (*112 A 214*) have shown that excess of Ag and Hg ions prevents bubble attachment at sphalerite surfaces with ethyl xanthate collector. Excess of Cu or Pb ion does not have this effect, although it does increase the time required for collector coating.

Copper sulphate is not effective to resurface Zn metal (*112 A 230*).

Resurfacing of nonsulphide minerals by heavy-metal and earth-metal ions is well established (*TP 1UU; 112 A 373; 134 A 180; 153 A 462*). It is a definite hindrance to the making of clean concentrate in soap flotation, but does not cause difficulty in sulphide flotation with sulphydric collectors. Examples are the use of Pb or Fe″ for calcite, Ba for gypsum, Pb for chromite and for scheelite; Fe, Ca, Ba, or Al for quartz. It has also been proposed to depress earth carbonates by resurfacing them with Fe″ or Ni and then using sodium metaphosphate to depress the resulting metallic soaps in fatty-acid flotation (*U. S. pat. 2,040,187*).

Common-ion activation. The aqueous solution film surrounding a sulphide particle to be collector-coated, and the solid surface itself are, prior to the addition of collector, in a state of near equilibrium, yet the concentration of oxidation-product ions in the region is far higher than exists in the body of the solution. This is proved by the fact that while leaching of a copper- or lead-sulphide suspension with water for a period of, say, 30 min. produces a low concentration, only, of sulphate ion in the bulk solution, addition of xanthate ion, which will form with the metal ions a precipitate of relatively low solubility, increases the concentration of sulphate ion. This additional sulphate can have come only from the particle surface and from the solution zone directly contiguous thereto. It follows, if the bulk of the solution was below the metal-sulphate saturation point before the addition of xanthate ion, that the metal sulphate at the particle surface must be of lower solubility than the same metal sulphate in bulk. This is readily understandable, since the sulphate ion at the sulphide surface is held to the lattice by forces approximating those that hold the sulphide ions. It follows further, from the solubility-product principle, that addition of a common ion will tend to load up the particle surface with that ion. If the metal ion is added, the surface will tend to become more completely metallic, whereupon, according to the same solubility-product principle, precipitation of the collector coating can be effected with a lower concentration of collector ion than otherwise.

Thus Wark and Cox (*112 A 212*) found that while a contact angle could not be developed on sphalerite in amyl xanthate solution of 25-mg. per li. concentration, addition of 9 mg. per li. of zinc sulphate caused bubble attachment. Similarly added copper ion is necessary to cause collector coating of chalcopyrite with methyl xanthate.

When the solid is relatively soluble, *e.g.*, cerussite, the same principle applies, but the amount of lead ion that must be added to give a preponderantly metal-ion surface is so large that more collector is consumed by precipitation in the solution than is otherwise required. In such cases it is usual to add first an ion that forms with the lead a relatively insoluble salt, *e.g.*, a phosphate, chromate, or arsenate. This forms a film of the corresponding lead salt over the surface of the cerussite and is held there by an excess of the common-acid ion in the solution. The bulk solution now being substantially freed of lead ion, a relatively small amount of a collector anion, which forms with the lead a salt less soluble than that formed with the conditioning ion, is sufficient for collector coating. See also ***Sulphide ion,*** Art. 10.

8. DEPRESSION

Depression is the converse of activation; it comprises steps taken to prevent flotation of a particular mineral or group of minerals. It is practiced both to hold down gangue and low-assay middling in one-mineral flotation and to hold back one or more of the minerals normally floatable by a given collector in differential flotation.

The methods of depression are manifold, but they may be grouped according to purpose into a small number of classes. (1) Prevention of activation resurfacing by soluble salts present in the pulp; (2) closure of surfaces against collector reaction; (3) destruction or nullification of collector coatings; (4) dispersion; (5) resurfacing to produce water-avidity.

Prevention of resurfacing by soluble salts is ordinarily accomplished by precipitating or complexing the activating ion or ions (*e.g.*, $3CN^- + Cu^{++} = [Cu(CN)_3]^=$). The usual

precipitants for heavy metals are hydroxyl, carbonate, silicate, and sulphide ions; the earth metals require high concentrations of hydroxyl for precipitation as hydroxides, but their basic carbonates, and their phosphates, silicates, and fluorides as well as their metal-acid salts (tungstates, molybdates, etc.) are relatively insoluble. Complexing ions are cyanide, fluoride, fluosilicide, silicate. The weak-acid anions generally form relatively insoluble salts with the alkaline-earth metals. Since the alkaline-earth ions tend to activate quartz and the alkaline silicates in alkaline solutions, their precipitation tends to depress these gangue minerals when fatty-acid or other collectors for alkaline-earth minerals are present. Such collectors are almost invariably present in ores, owing to the lubricants used in mining and crushing, hence this type of depression serves to raise grade of sulphide concentrate even though sulphydrate collectors are the only ones intentionally added.

Usual procedure in the attempt to prevent accidental activation is to try one after the other of the reagents carrying the above-mentioned precipitating or complexing ions; this is the quickest procedure in preliminary testing. If it fails, the cationic composition of the pulp water and the mineralogical character of the unwanted float should be determined. The nature of the activation can then be deduced, and a remedy devised. The problem is usually straightforward ionic chemistry, guided by a table of solubilities (Seidell, *Solubilities of Inorganic and Organic Substances*, D. Van Nostrand Co., N. Y.; *Handbook of Chemistry and Physics*, Chemical Rubber Publishing Co., Cleveland, Ohio).

Closure of surfaces against collector reaction is best typified by the action of SODIUM SULPHIDE in flotation of heavy-metal minerals. With sulphides, if the concentration of sulphide ion is held high enough so that oxidation of surfaces is reversed by resulphidization as fast as it occurs, no collection will take place, because the sulphide is less soluble than any known collector-heavy mineral reaction products. Similarly the iron-cyanide complex and the iron iron-cyanides formed when CYANIDE ION attacks the surface of pyrite keep the concentration of available iron ions at pyrite surfaces so low that reaction with collector is too meager for effective levitation. Added SILICATE ION drives back surface ionization of silicate minerals, thus closing these surfaces against both anionic and cationic collectors. SULPHURIC ACID acts similarly with quartz.

Destruction or nullification of collector coatings occurs, *e.g.*, when mixed copper-molybdenum concentrates made with sulphydric collectors are heated, the reaction in this case being destruction of the sulphydrate-coating compound and probably, also, steam distillation of oily contaminants which had acted as accessory collector (Art. 6). Adsorption of organic colloids at surfaces coated with collector, which occurs (*153 A 473*), covers over the collector coating and renders the particle water-avid and unsusceptible to levitation. Acid and alkali in soap flotation form acid and basic soaps at coated particle surfaces; these ionize and thus decrease the tendency to levitation. See also critical *p*H, under ***Hydrogen and hydroxyl***, Art. 10.

Dispersion is essentially a means of insuring that all of the particles in the pulp are free to act as individuals in response to any subsequent treatment. The mechanism of producing it has already been discussed (***Slime coating***, Art. 7). It is, in general, a sign that particles are not collector-coated, but the acid and basic soaps formed both sides of the *p*H of maximum contact angle with soap collectors cause the coated particles to disperse. Collector coating with sulphydric reagents and production of neutral-soap coatings with carboxylic collectors cause flocculation of the coated particles, leaving those uncoated still dispersed. This is the condition sought by flotation operators in cell feeds, as it usually foretells good flotation, in which neither will granular values be entrained in slime and carried into tailing nor will slime gangue be carried with collector-coated material into overflow.

Resurfacing with hydrophilic coatings anchored by collector groups has been mentioned (Art. 3). This use of collector groups with hydrophilic substituents has not been employed commercially, principally for the reason that no field for its use has presented itself in operation. Depression of pyrite by cyanide makes use, in a way, of the same principle by anchoring the water-avid ferrocyanide at the pyrite surface; depression of galena by chromate and of barite by acid dichromate are other instances. These, however, also involve surface closure and are usually so classed.

Use of organic colloids to depress involves hydrophilic coating. When the amount of colloid added is small, the coating is usually selective, and unless the *p*H is that of the isoelectric point of the coating colloid, dispersion is effected. At the isoelectric point the coated particles flocculate. Large quantities of colloid coat all ore constituents and usually produce flocculation.

Duration of conditioning is important, especially when, as with the organic colloids, the action is not ionic.

At ALASKA JUNEAU, using soluble starch as a depressant, air supply and starch feeders are activated electrically on a predetermined automatic schedule which cuts off air supply and pulp discharge to a

large subaeration machine for, say, 30 min., during which time feed and conditioning agent are being introduced. A heavy matted froth is formed during this time; the timer then cuts off starch feed, opens tailing discharge, and turns on air for, say, 10 to 15 min. (*U. S. pat. 2,184,116*).

9. PROTECTION

Protection is necessary both for collectors and for weak-acid salts used as conditioners. Protection for collectors usually involves precipitation of soluble salts of metals; the methods have been discussed (Art. 7). Weak-acid salts, both the soap collectors and the silicate, sulphide, cyanide, and similar conditioners, should be used in pulps that are at least not more than slightly acid, or they are thrown over into the acid form and ionization is largely suppressed by the excess of hydrogen ion present.

10. CONDITIONING AGENTS

Functions have already been discussed generally. In the following discussion of individual reagents, arranged alphabetically according to the principal active part, these functions are dismissed in many cases simply by naming them, and reference should be made to the functional description.

Acids are normally added for the purpose of controlling hydrogen-ion concentration; hydrofluoric acid is an exception (see ***Fluoride***). SULPHURIC ACID is ordinarily used, on account of its low price. It depresses quartz—and probably other silicates—in soap flotation by repressing ionization of silicic acid at the particle surfaces by mass-action effect, thus preventing both activation by metals and/or collector coating. It also represses ionization of the fatty-acid collectors, decreasing availability of collector ion.

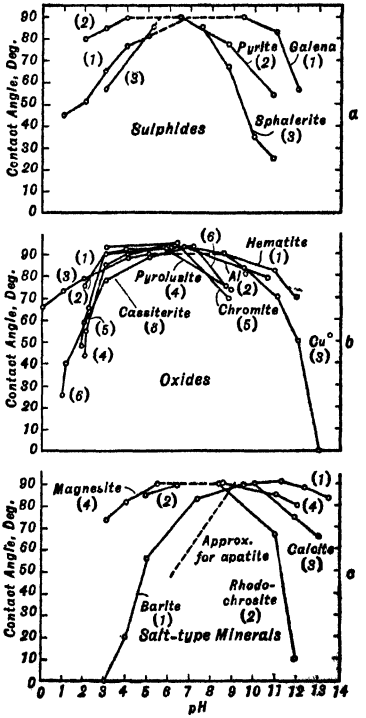

FIG. 2. Effect of *p*H on contact angle with fatty-acid collectors.

Sulphuric acid depresses granular silicates while permitting flotation of mica with amines (*RI 3558*). Short-chain organic acids are said to be as good depressants for silicate gangue as sodium silicate in nonsilicate nonsulphide flotation. On the other hand, sulphuric acid may be used to reactivate nonsulphides after depression by sodium silicate (*RI 3239*), copper sulphides after depression by cyanide and $FeSO_4$ or other reducing agents (*U. S. pat. 2,105,901*); and cationic collectors after tie-ups by sodium silicate.

Acids convert metal soap coatings to acid soap substantially completely at *p*H values dependent upon the soaps (Fig. 2). Particles so affected are unfloatable unless auxiliary oily collector is used. Fig. 2 shows that the neutral soaps of the heavy metals exist at *p*H 7 and below while in this range the earth-metal soaps are largely in acid form; this explains, in part at least, the effectiveness of sulphuric acid in early-day fatty-acid flotation of sulphides.

Quantity of acid necessary varies according to both the base and acid ions in nonsilicate salt-type minerals. Dean and Hershberger (*134 A 84*) report that with oleic acid as a collector the amounts of sulphuric acid required to depress rhodochrosite was 4 lb. per ton; calcite, 3 lb.; scheelite, 0.6 lb. and apatite, 0.4 lb. (See also Fig. 2.) As between the carbonates, manganese required more than calcium because of the greater basicity of the latter. As between the calcium minerals, the carbonate required by far the most because of loss of hydrogen ion by formation of carbonic acid.

Depression occurs on the acid side with many of the sulphydrate collectors. This is due, in most cases, to a decrease in dispersion of the collector by reason of precipitation of the corresponding acid, and, with higher concentrations of hydrogen ion, to actual destruction of collector ion by decomposition.

Acids usually coagulate ore pulps.

Aluminum salts (nitrate and sulphate) are said to activate quartz over a wide *p*H range (*U. S. pat. 2,185,224*); feldspar is also activated in the range 7 to 8, but depressed (as is spodumene) at *p*H <7 (*40 CIMM 691*). See also ***Metallic ions.***

Hahn (*123 J 449*) showed that in flotation of a chalcopyrite ore with xanthate the addition of aluminum sulphate raised the tailing from 0.07% Cu at zero addition of Al salt to 0.12% at 4 lb. and 0.42% at 10 lb. The addition of lime was no help at sulphate additions up to 4 lb., but above this quantity lime in quantities substantially equal to the Al salt additions kept the tailing in the range 0.09 to 0.12% Cu. $Al_2(SO_4)_3$ was used at Rivermines to activate sphalerite (S. J. Swainson, *PC*).

Carbonate ion is used as a precipitant for heavy and earth metals in prevention of resurfacing and in protection. Its effectiveness for heavy metals is increased by hydroxyl because of the tendency to form basic carbonates. Co-addition of lime is recommended for Ca ion (*RI 3328*). Carbonate ion is useful in steel-mill grinding of nonsulphide ores, where iron acts as an activator, to prevent solution of abraded iron (*RI 3328*).

The usual carrier employed is sodium carbonate, which contributes both $CO_3^{=}$ and OH^-. It is usually employed in lead circuits (see Art. 46, *Galena*), for pyrite flotation, and in bulk floats because of the specific depressing effect of lime on iron sulphides. It prevents activation of sphalerite by lead salts, if present in stoichiometric excess (*112 A 230*). Quantity normally added in lead circuits is from 1 to 2 lb. per ton, but may run up to 5 lb. (*123 J 293*). If the soluble salt content of the ore is too great, consumption becomes prohibitive, *e.g.* Britannia slimes (*IC 6619*). Excess usually increases frothing, and causes a watery froth and a drop in recovery; in sulphide flotation this may be accompanied by increased flotation of quartz (*RI 3247*) that sodium carbonate tends to prevent oiling of quartz in thick-pulp conditioning of table-flotation feed, even with heavy overoiling.

Cement has been used to depress pyrite and pyrrhotite. It carries unstable complex silicate and so-called aluminate ions which are made available in water and form insoluble iron compounds. Hence the function is surface closure.

Chromate and dichromate have been used for surface closure of galena in lead-zinc differential work, the reaction producing a multi-coating of the lead-chromate salt on the galena particles. Two to 5 lb. per ton of bulk concentrate is ordinarily required for depressing the galena content; about half as much is required on raw ore. Reactivation is asserted by use of ferrous sulphate, hydrochloric acid alone or with sodium chloride, or sulphuric acid with sodium hydrosulphite or bisulphite (*U. S. pat. 2,150,114*).

Gaudin (*TP 1 UU*) reports depression of pyrite with relatively low concentrations of $Na_2Cr_2O_7$, with ethyl xanthate collector, while at the same time K_2CrO_4 had no effect at concentrations up to 2 lb. per ton of solid. Since the dichromate of iron is soluble, this should not be a surface closure. But the dichromate is a strong oxidiser, while ferric xanthate is particularly susceptible to decomposition by oxidation; the chromate, on the other hand, is much less powerful in its oxidizing effect. The postulate that oxidation is responsible for the dichromate effect is confirmed by the fact that potassium permanganate has an almost equal depressing effect.

Wark and Cox (*112 A 225*) report that prolonged treatment of sphalerite (30 min.) with 100 mg. per li. of dichromate, followed by 30 min. in 10-mg. per li. copper sulphate solution resulted in failure to collector-coat with ethyl xanthate. This represents a residual effect, not explicable on the basis of chromate coating, because of the relatively high solubility of zinc dichromate, nor on the ground of decomposition of the xanthate by oxidation. It is not consistent with the differential flotation of zinc with chromate as the lead depressant.

Dichromate, preferably in acid solution, is reported as a depressant in soap flotation for cleaning calcite from a rough barite concentrate made with metal salt-silicate depressant (*post*) in the rougher (*40 CIMM 691*). This is probably depression of a silicate surface. The dichromate is asserted to be generally a better depressant for silicate gangue in soap flotation than sodium silicate is; it is reported to depress both magnesite and sulphide minerals in talc flotation (*RI 3239*).

Copper ion. Copper sulphate is the cheapest form. Its principal use is to resurface sphalerite, in either acid or alkaline pulps. Precipitation as hydroxide is insufficient to prevent activation, although it slows it down; with both hydroxyl and carbonate ions present (soda ash) even more time is required.

Mortensen (*25 ChA 3281*) reports that the time required to activate blende with copper sulphate increases with the iron content of the blende, and increases with rise in temperature and in H-ion concentration. Cu^{++} is effective similarly to activate galena, pyrite, arsenopyrite, stibnite (*RI 3326*), and chalcopyrite, but not pyrrhotite (*112 A 254*). Sulphide activation is probably the useful effect gained in grinding in the presence of $CuSO_4$ in gold flotation, since there is no known reaction between the salt and gold itself, and clean native gold does not require resurfacing. Fahrenwald (*139 #2 J 80*) reports that Cu^{++} depresses stibnite at *p*H 4 to 7.4. It complexes cyanide ion. It is used (0.3 lb. per ton) at Wright-Hargreaves to resurface pyrite before gold flotation after leaching with cyanide and lime (*140 #4 J 42*). Wark and Cox (*112 A 301*) report that copper ion in conjunction with cyanide and alkali can prevent bubble attachment to pyrite with thiophosphates, xanthates, and dithiocarbamates, and that less cyanide is necessary than otherwise; they believe the copper-cyanide ion to be the effective depressant. The action may well be surface closure by an iron cuprocyanide which is less soluble than

the iron iron-cyanides. Cu^{++} also has some resurfacing action on carbonate, phosphate (*U. S. pat. 2,105,826*), silicate, and other nonsulphide minerals whose anions form compounds of low solubility with copper; this action is, in general, more pronounced in alkaline medium. Wark and Cox (*134 A 61*) report that when copper ion is used with cyanide ion in chalcopyrite-pyrite or sphalerite-pyrite differential work, copper acetate gives better results than copper sulphate.

Feeding is best done as a dilute solution, say 5%. The actual feeder must have wood or copper parts in contact with solution. Usual quantity range is 0.5 to 1.5 lb. per ton. At PECOS (*IC 6605*) addition to the feed launder entering the zinc conditioner rather than entering the conditioner where lime is also added decreased the quantity of copper salt required by about 0.3 lb. per ton. At POROS (*IC 6706*) the amount of copper sulphate necessary after 0.05 lb. of sodium cyanide had been used in the lead circuit was 0.42 lb.; at BALMAT (*IC 6574*) the corresponding quantities were 0.09 and 2.3; at BASE METALS (*Tref 5/42*), 0.31 and 1.24, $ZnSO_4$ (1.1 lb. per ton) having been used with cyanide. Consumption of the copper salt is definitely less when $ZnSO_4$ alone is used as depressant for zinc.

Cyanide ion, as the Na or K salt, is used commercially to depress sphalerite, the iron sulphides, and arsenopyrite in the presence of sulphydric collectors. The action with iron minerals is improved by lime and by copper sulphate (*q.v.*); that against sphalerite by zinc sulphate. It is reported (*112 A 267*) that the combined action of cyanide and copper on pyrite is decreased by rise in temperature. Cyanide also has some depressing effect on the copper-iron minerals (*31[1] Bul CIMM 75; PF 196*), enargite, and stibnite (*139 #2 J 80*), but has none on galena, chalcocite, or covellite. The depression of both pyrite and the copper-iron minerals is greatest in a reducing atmosphere, *e.g.*, $FeSO_4$ or SO_2.

It is proposed to combat the Cu-Fe depression by resurfacing with Pb^{++} (*U. S. pat. 2,048,370*) or with Ni^{++} in neutral or slightly acid pulp (*U. S. pat. 2,035,458*). In soap flotation cyanide is reported to have improved separation of manganese oxides from iron oxides (*RI 3600*), and is recommended as a depressant for quartz and silicate minerals (*U. S. pat. 2,106,800*). It is also proposed as a dispersant in cationic flotation (*U. S. pat. 2,195,724*).

The mechanism of depression differs with different minerals. With sphalerite it involves prevention of resurfacing by metal ions of low sulphide solubility (Art. 7) by complexing them with cyanide, and depends upon the fact that the complexes are so stable that they either will not yield the metal to sulphide ion (*e.g.*, Cu) or, by mass-action effect the equilibrium between $[Me(CN)_x]$ and MeS is shifted so far toward the complex ion that resurfacing is inappreciable (Ag, Hg). Pb^{++} from oxidized galena resurfaces sphalerite slowly and is not complexed by cyanide, but concentration of Pb^{++} can be kept down in relatively unaltered ores by adding collector in the grinding circuit. With collectors that coat sphalerite without resurfacing, *e.g.*, potassium di-*n*-amyl dithiocarbamate, cyanide has relatively slight depressing effect (*112 A 267; PF 197*); it is not unlikely that the small effect reported is due to contained iron (see below).

The mechanism of depression of pyrite has not been established. Since the mineral does not need resurfacing for coating with the lower xanthates, depression cannot be ascribed to prevention of this phenomenon. Cyanide forms with ferrous ion the very stable ferrocyanide $[Fe(CN)_6]^{\blacksquare}$, which, in turn, forms with either ferrous or ferric ion the very slightly soluble $Fe_7C_{18}N_{18}$, probably $Fe_4[Fe(CN)_6]_3$. Precipitation of this salt, with excess of cyanide present, would close the surface against oxidation of the iron, which is essential to collection of iron sulphide by xanthate (Art. 4), and, since the formation of the ferric compound from ferrous ion involves oxidation, reducing conditions are maintained at the surface of the pyrite. The latter possibly correlates with the fact that ferrocyanide ion itself is not a depressant for pyrite (*TP 1 UU*). The usual amount of cyanide required to keep down sphalerite and pyrite in the lead circuit is 0.1 to 0.25 lb. per ton.

Depression of the copper-iron minerals by cyanide would appear to be due to surface closure by copper ferrocyanide, the ferrocyanide ion being formed by the reaction of CN^- and Fe^{++} at the particle surface and immediately precipitating with copper ion in the lattice. This postulate is consistent with the fact, above cited, that Cu^{++}, which resurfaces pyrite, aids in the depression thereof by cyanide, that ferro- and ferricyanides are depressants for chalcocite (*F 164*), and that xanthates are not abstracted from solution by copper-iron minerals when the cyanide-ion concentration is sufficient to prevent bubble attachment (*134 A 41*).

Despite depression of the copper-iron minerals by cyanide, the concentration of cyanide ion required is sufficiently higher than that required for pyrite (while the conditions at the copper-mineral surface are such as to keep down CN^- concentration by the $[CuCN_3]$-$Cu_2[Fe(CN)_6]$ equilibrium struggle) that differential depression of pyrite is possible, if the amount of cyanide added is kept low.

The depressing effect of the cyanide ion on pyrite and on chalcopyrite is less the more active the reactive group of the collector and the higher the molecular weight of the collector ion in homologous series (*PF 200*).

The effectiveness of alkaline cyanides as a source of cyanide ion is increased by increase in *p*H. The increase in effectiveness has been shown to be substantially in direct proportion to the increase in ionisation of the cyanide salt with increase in *p*H, *i.e.*, the effect is

simply one of making cyanide ion available. Accepting the value $4.7 \cdot 10^{-10}$ as the dissociation constant of hydrocyanic acid, Wark and Cox (*112 A 245*) have calculated the following concentrations of cyanide ion in mg. per 100 mg. of NaCN added to an aqueous pulp at the corresponding *p*H values:

*p*H	6	6.5	7	7.5	8	8.5	9	9.5	10	11	12	13
CN^-	0.025	0.079	0.25	0.78	2.4	6.9	17	32	44	52	53	53.1

Taking these figures with contact-angle tests, Wark and Cox (*112 A 245*) report that the concentration of cyanide ion necessary to prevent bubble attachment with ethyl xanthate as collector ranges from 101 to 228 mg. per li., averaging 177, for chalcocite; 21 to 40, aver. 34, for covellite; 6.3 to 7.4, aver. 6.8, for bornite; 0.34 to 0.52, aver. 0.44, for chalcopyrite; and 0.08 to 0.16, aver. 0.10, for pyrite. Wark (*PF 204*) calls this the CRITICAL CYANIDE-ION CONCENTRATION for the mineral. It is to be noted that only in exceptional cases will all of the cyanide ion added be available to build up the requisite cyanide-ion concentration, owing to loss in complexing metal ions in solution, and further that the mineral to be depressed may have been resurfaced, which will call for a different critical cyanide-ion concentration.

Wark and Cox (*112 A 230*) report that 1 mg. per li. of NaCN lowers the critical *p*H of pyrite from 10.5 to 8.5 and 100 mg. per li. lowers it to 7. Wark (*PF 182*) states that cyanide is not a depressant for sphalerite and pyrite against a cationic collector such as cetyl trimethyl ammonium bromide.

Brighton *et al.* (*133 J 276*) report parallel abstraction and pure-mineral flotation tests with cyanide, using xanthates as collectors. Their tests indicate that complete depression of PYRITE occurs when the thiocyanate test for iron in the pulp is very faint and there is still free cyanide ion present; that the depression parallels the concentration of cyanide complex, whether with iron or copper, and is probably due to resurfacing with the iron-metal cyanide salt. The SPHALERITE that they tested contained some copper, and they found it necessary to add much more cyanide than was required to complex the copper sulphate added, in order to effect depression. GALENA did not abstract cyanide, and its flotation was not affected by concentrations up to 1 lb. per ton. CHALCOPYRITE consumed cyanide, but its flotation was substantially unaffected thereby in concentrations up to 1 lb. per ton; the paper records, however, that the chalcopyrite floated with terpineol alone so that it was already collector-coated when added to the machine, and the test is to be interpreted as indicating that the amount of cyanide added was insufficient to displace the copper-soap coating. SPHALERITE activated by lead was not depressed by 1 lb. per ton of cyanide.

When cyanide is used as a depressant for sphalerite and/or pyrite in gold ores it dissolves appreciable quantities of gold and carries them into tailing. At GOLDEN CYCLE (*136 J 381*) where cyanide had to be used to depress pyrite on account of the flocculating effect of high lime, the amount was 20 to 40¢ ($35 gold) per ton of water. Precipitation by activated charcoal and flotation thereof (Art. 49) might serve to decrease the loss; at GOLDEN CYCLE the solution was worked back into the cyanide plant; the same procedure prevails at DEMONSTRATION (*134 A 241*).

Wark and Cox (*112 A 301*) state that cyanide prevents activation of sphalerite by copper in lower concentrations and/or less time than it deactivates copper-resurfaced sphalerite and that this latter operation is easier than depression of the resurfaced mineral after collector coating. On this basis it is, of course, advisable to add cyanide to the grinding circuit when sphalerite depression is sought.

Parsons (*123 J 759*) points out that TIME-FACTOR is important in conditioning with cyanide; he states that optimum time may range from a few minutes to an hour.

Dextrine. See *Organic colloids.*

Dyes comprise a tremendous variety of compounds. Many of them are hydrocarbons with two or more solubilizing substituents. Induline blue, Congo red, aniline blue, eosin bluish, eosin yellowish, picric acid, methylene blue, Erie black Gx00, Wool green S, acid green, acid orange, Hoffman violet, acid blue, acid orange A, and indigotine have been recommended for depression of molybdenite from copper sulphides with xanthate collectors (*U. S. pat. 2,095,967*). Others, especially acid dyes containing carboxyl or sulphonic substituents or both, *e.g.*, sulphonated nigrosine, sun yellow, and alizarin saphirol B, have been proposed for dispersion of both siliceous and carbonate gangues (*U. S. pat. 2,211,686*). Nothing is definitely known as to mechanism, but the recommendation of poly-substituents suggests that one of the substituents acts as the anchoring group while the other ionizes and both produces Brownian movement and prevents bubble attachment.

Earth-metal ions have little or no effect in sulphide flotation with sulphydric collectors except in concentrations far exceeding any met other than in flotation with sea water (*79 A 56*). With fatty-acid collectors, however, they consume reagent by precipitating

insoluble soaps; these, having gummy characteristics, smear all particles indiscriminately and tend to carry them into froths. Ca and Mg salts are asserted to retard sulphidization with Na_2S (*RI 3333*).

See also *Resurfacing* (Art. 7).

Fluoride ion is used as a precipitant for ferrous, ferric, aluminum, and the earth-metal ions; it therefore serves to prevent resurfacing of quartz by these ions and thus permits soap flotation of other silicates from quartz (*RI 3419*). Fluoride forms relatively stable complexes with the small positive ions, *e.g.*, $SiF_6^{=}$ (fluosilicate) and $AlF_6^{\equiv}$, the alkali and earth salts of which are only slightly soluble; it thus acts as a dispersant for clays and other alteration products of feldspars, even in acid solutions. The fluosilicate ion is asserted to complex aluminum (*134 A 76*). Solutions of multivalent metal oxides in hydrofluoric acid are recommended (*U. S. pat. 2,297,689*) as aids in floating aluminous silicate minerals with cationic collectors.

Glue. See *Organic colloids*.

Hydrogen and hydroxyl ions are present in all aqueous solutions; the quantities are equal in pure water; H^+ predominates in acid solutions and OH^- in alkaline.

***p*H.** The product of the ionic concentrations in mols per liter $[H^+]$ $[OH^-]$ is always constant and equal to 10^{-14}. *p*H is the common logarithm of the reciprocal of hydrogen-ion concentration in an aqueous solution. Since $[H^+] = [OH^-]$ in pure water, $(H^+) = 10^{-7}$, hence *p*H of pure water = 7. In acid solutions $[H^+] > [OH^-]$ and is, therefore, $>10^{-7}$, whence *p*H < 7. Conversely in alkaline solutions *p*H > 7.

Hydrogen-ion concentration affects the concentrations of collector ions and consequently their reaction rates and the equilibrium points for the collector-mineral coating reaction; it affects the extent to which the mineral-particle surface ionizes, and may determine the nature of the ions; and it similarly affects the ions in solution in the pulp, whether they be brought there in the mill water, leached from the ore, or added as reagents.

Acid pulps are rarely used today in sulphide flotation, but they are not uncommon in nonsulphide work. Dispersion of anionic collectors is usually hindered by an acid pulp because the acid forms of most of them are relatively insoluble; on the other hand dispersion of cationic collectors in the highly ionized salt form is aided by acidification. The weak-acid types of conditioning agents, *e.g.*, silicates, cyanides, sulphides, are similarly hindered in their actions in acid pulp. Acidification tends to clean oxide crusts from sulphides and thus frequently aids flotation of the easily oxidized iron sulphides; this is true whether the collector is of sulphydric or fatty-acid type, because the neutral-soap peak for iron falls well on the acid side (see Fig. 2). In general acid flocculates nonsulphide slimes without, at the same time, dispersing the sulphides, hence it aids slime coating of the latter. Acid minimizes or prevents resurfacing of quartz by metal ions, probably by suppression of ionization of the silicic acid at the quartz surface. Froth in acid pulps tends to be heavily loaded and correspondingly meager; such pulps are not, therefore, well suited to the vigorous aeration of pneumatic cells. The usual reagent for producing acidification is sulphuric acid, on account of cheapness. Hydrofluoric and fluosilicic acids are occasionally used in nonsulphide flotation because of specific properties of the anion, *q.v.*

Alkaline pulps. Hydroxyl ion is used for a number of purposes. It is an effective precipitant for heavy-metal ions; it complexes the readily amphoteric metals at low *p*H values and even some of the heavy metals in the middle alkaline range. It thus serves to prevent resurfacing by the less vigorous activators, to protect more vigorous activators such as Cu^{++} from consumption by collector (and conversely to protect collector), and it protects weak-acid ions such as silicate and sulphide. It increases the ionization and consequent availability of weak-acid collectors and conditioners. It is a depressant in its own right for pyrite and the other iron sulphides, probably owing to surface closure by the gelatinous hydroxide, and to mass-action effects with ferrous and ferric ions at the pyrite surface; it is most effective in this service when introduced as lime; it depresses all minerals with all collectors at sufficiently high concentration. It acts as a dispersant for many minerals, particularly the nonsulphides, at low concentrations (0.001 to 0.01 molar), but is a flocculant at higher concentrations; hence it has a controlling effect on slime coating. At high concentrations produced by alkaline (not earth-metal) carriers it removes oil coatings from minerals and emulsifies the oil in the water so that it can be separated from the solids by decantation. Excess always has a bad effect on frothing, producing watery, lightly loaded froths. This effect is most pronounced with fatty-acid collectors. It is probably secondary, however, reflecting prior sequential effects on collector coating and levitation. Metal work in contact with alkaline pulps wears more slowly than in acid, owing. of course, to the low concentration of hydrogen ion.

Range in *p*H is generally from a value between 7 and 8 for sulphide flotation in which pyrite is sought to be floated to 10 or more when lime is depended upon for pyrite depression. The *p*H for pulps in which cyanide is used as a depressant depends upon the mineral

to be depressed, the minerals to be floated, the collector used, the resurfacing salts present, and the other demands on hydroxyl ion. Maximum alkalinity with sulphydric collectors is fixed by the CRITICAL *p*H VALUE, which is defined by Wark (*PF 186*) as that value of *p*H above which bubble attachment to a mineral cannot be effected with a given quantity of a given collector. Table 4 gives values under a variety of conditions. The quantities of

Table 4. Critical *p*H values (*After Wark*) *h*

Mineral	Collector						
	Potassium ethyl xanthate *a*			Sodium Aerofloat A *b, f*	Sodium diethyl dithiocarbamate *c, f*	Potassium isoamyl xanthate *d, f*	Potassium di-*n*-amyl dithiocarbamate *e, f*
	Room temp.	40° F.	95° F.				
Arsenopyrite	8.4	.....	.....	.....	.....	.....	.....
Bornite	13.8	.....	.....	.....	.....	.....	.....
Chalcocite	>14.0	.....	.....	.....	.....	.....	.....
Chalcopyrite	11.8	13.0	10.8	9.4	>13	>13	>13
Covellite	13.2	.....	.....	.....	.....	.....	.....
Galena	10.4	10.8	9.7	6.2	>13	12.1	>13
Marcasite	11.0	.....	.....	.....	.....	.....	.....
Pyrite	10.5	10.2	10.0	3.5	10.5	12.3	12.8
Pyrrhotite	6.0	.....	.....	.....	.....	.....	.....
Sphalerite	*g*	.....	.....	*g*	6.2	5.5	10.4
Sphalerite, *R*	13.3	.....	.....	.....	.....	.....	.....
Tetrahedrite	13.8	.....	.....	.....	.....	.....	.....

a 25 mg. per li. *c* 26.7 mg. per li. *e* 42.3 mg. per li.
b 32.5 mg. per li. *d* 31.6 mg. per li. *f* Room temperature.
g No contact possible at any *p*H without activation.
h The values herein are for normal concentrations of collector, as given below. Increase in collector concentration increases the critical *p*H (*112 A 218*).
R = Resurfaced with Cu^{++}.

collector used in the tabulated tests were molar equivalents. The failure of attachment at the critical point is due to lack of collector film, owing to complexing of the metallic ions of the surface with hydroxyl as anions of the form $[Me(OH)_x]^{-y}$ (*Hammett*). If conditioning is attempted in a solution, at or above the critical point, no collector coating forms because of unavailability of metallic ion; if a collector coating is formed at lower *p*H and the *p*H is raised to the critical, the film dissolves and cannot re-form. At higher concentrations of collector the critical *p*H value is higher, and *vice versa* (*153 A 453*). Barsky (*112 A 236*) points out that for any given collector the product of hydrogen-ion and collector-ion concentrations at critical *p*H is roughly constant.

Wark (*PF 189*) postulates that the relationship [A]/[OH] = K holds for the critical point, where [A] is concentration of the collector ion, [OH] concentration of hydroxyl ion, and K an experimental constant, and that depression will occur when the value of the ratio exceeds the constant. The critical *p*H for a given collector is higher the greater the collector concentration (Table 5); as between homologous

Table 5. Effect of concentration of collector on critical *p*H value (*After Wark and Cox, 112 A 267*)

Mineral	Sodium diethyl dithiophosphate, mg. per li.									
	10	25	50	100	200	300	400	500	600	700
	Critical *p*H									
Pyrite	.....	3.5	4.5	5.1	5.4	5.7	5.8	5.9	6.1	6.2
Galena	4.0	6.5	6.8	7.3	8.0	8.3	8.6	8.8	8.9	9.0
Chalcopyrite	9.0	9.5	9.7	10.0	10.2	10.5	10.7	10.8	11.0	11.1

collectors it is higher the higher the molecular weight; it falls somewhat with increase in temperature; it is different for different sulphydrate collector groups with the same hydrocarbon groups, *e.g.*, dithiophosphate < xanthate < dithiocarbamate; and, with most such collectors maintains the order sphalerite < galena < pyrite < chalcopyrite < chalcocite (*PF 187*).

Below the critical *p*H value, *p*H and cyanide-ion addition should be so proportioned as to reach critical cyanide-ion concentration for the mineral to be depressed with the least cost.

The fact that for each collector or collector class there is an optimum hydrogen-ion concentration was pointed out by Gaudin (*10 MMt 19*) and has been confirmed by a number of other investigators. The optimum band averages wider for some collectors than others, *e.g.*, xanthates have a relatively wide band while the range for the dithiophosphates is much narrower.

With fatty-acid collectors maximum *p*H depends certainly on the mineral to be floated, and possibly on the fatty acid used. Without fortification by oil it is probable that the floating range with oleate collectors is that above about 60° contact angles for the various minerals in Fig. 2.

Carriers of hydroxyl ion differ according to the operation. Lime is usual in copper flotation and in lead-zinc differential work when pyrite is not desired in concentrate, but if the pyrite carries precious-metal values, soda ash is used for *p*H values below 10 and sodium hydroxide for higher *p*H. Cyanide, water glass, sodium sulphide, and the alkaline phosphates produce hydroxyl ion by hydrolysis, but this is not usually their primary function.

Point of addition depends upon the end sought. Normally the effect is wanted prior to collector coating, wherefore the addition is made before collector is added. The usual point is the grinding mill or its equivalent in the circuit. Occasionally lime is added as far back as the mill bins, and frequently there is addition subsequent to a part of the flotation, as in differential work where *p*H is an essential part of the control.

Buffering. The weak-acid carriers are all buffers. (See under the specific carriers for ranges.) The ores contribute buffering effect also, probably due to reactions of mineral constituents, some of which consume or contribute H^+, others OH^-, and reach equilibrium at particular concentrations of these reactants. Certain minerals, *e.g.*, quartz, the earth-metal phosphates, and sphalerite, consume either H^+ or OH^-, according to which predominates in the solution.

Iron salts are both activants and depressants, their role depending upon the mineral in question. In either role they hinder the flotation operation. The usual source is iron sulphides, but in nonmetallic flotation they may come from machines used in comminution.

Activation occurs by resurfacing of earth-metal salts by metathesis, *e.g.*, $CaCO_3 + FeSO_4 \rightarrow FeCO_3 + CaSO_4$, and of quartz either by metathesis with a soluble silicate formed at the quartz-particle surfaces in alkaline solutions or by a flocculation coating of iron hydroxide. Resurfacing is most active in alkaline solutions. When the mineral resurfaced is one that it is desired to float, *e.g.*, calcium phosphate, no harm is usually done, since the iron soaps are sufficiently insoluble to precipitate as collector coatings. Such reactions also have the effect of lowering the concentration of iron ion to a point where resurfacing of quartz and silicates does not occur.

Ferrous sulphate has been recommended (*U. S. pat. 2,150,114*) to reactivate galena that has been depressed by chromate.

It has been proposed (*U. S. pat. 2,040,117*) to utilize the resurfacing of earth carbonates by iron, and the further fact that the neutral-soap maximum for iron occurs well into the acid range (Fig. 2), to make the iron a specific depressant in certain nonsulphide flotations. Thus in separation of fluorite or scheelite from calcite, condition with ferrous sulphate to resurface the calcite with iron carbonate, which will float reluctantly or not at all at *p*H @ 7 to 8. Sodium ortho-, pyro-, or metaphosphate, it is said, aids depression of the resurfaced carbonate. Similar separation of barite from witherite is suggested.

Depression by iron salts is a well-recognized phenomenon in sulphide flotation. The effect on copper minerals (principally chalcopyrite in the ore tested) is shown in Table 6 (*after Hahn, 123 J 449*).

Table 6. Effect of iron salts on flotation of chalcopyrite ore

Ferrous sulphate		Ferric sulphate	
Lb. $FeSO_4$ per ton of ore *a*	Tailing, % Cu	Lb. $Fe_2(SO_4)_3$ per ton of ore	Tailing, % Cu
0.0	0.07	0.0	0.07
1.5	0.19	2.0	0.21
3.0	0.16	4.0	0.19
4.5	0.22	6.0	0.46
6.0	0.79	8.0	0.44
7.5	0.73	10.0	0.32

a Reagents: 4 lb. CaO, 0.2 lb. xanthate, 0.5 lb. Cleveland Cliffs No. 2, per ton of ore.

These tests indicate that the ferrous and ferric salts have equally bad effects up to 4 or 5 lb. per ton of ore. The effect of ferrous sulphate on flotation of copper-activated sphalerite with ethyl xanthate or Aerofloat is particularly bad (*RI 3149*). Ferrous sulphate has been used in conjunction with cyanide as a specific depressant for pyrite at MATAHAMBRE (*128 J 921*), and alone as a depressant for arsenopyrite (*RI 3370*).

Remedy for dissolved iron salts is, usually, to remove them by precipitation, but washing out and complexing, as by CN ion, have also been proposed. The usual precipitants are hydroxyl ion and carbonate ion; phosphate has also been added, and is present naturally in the phosphate ores. Table 7, after Hahn, shows the advantage of lime in chalcopyrite flotation.

In light of the fact that lime produced the greater improvement in the presence of the ferric salt (Table 7) Hahn proposed that when the iron salts were ferrous an oxidizing agent be added with the lime. He found that both bleaching powder and oxygen gas were highly effective, but that excesses were harmful, probably owing to decomposition of collector.

Table 7. Effect of lime in flotation of chalcopyrite ores containing iron salts

Ferrous sulphate			Ferric sulphate		
X lb. CaO per ton of ore *a*	Lb. $FeSO_4$ per ton of ore	Tailing, % Cu	Lb. CaO per ton of ore	Lb $Fe_2(SO_4)_3$ per ton of ore	Tailing, % Cu
4.0	0.0	0.07	4.0	0.0	0.07
5.0	1.5	0.10	5.0	2.0	0.08
6.0	3.0	0.13	6.0	4.0	0.10
7.0	4.5	0.14	7.0	6.0	0.13
8.0	6.0	0.17	8.0	8.0	0.11
9.0	7.5	0.23	9.0	10.0	0.14

a Reagents: X lb. CaO, 0.2 lb. xanthate, 0.5 lb. Cleveland Cliffs No. 2, per ton of ore.

Lactic acid, which is named as typical of short-chain dihydroxy organic acids in its action, is asserted to be a powerful depressant in iron-sulphide flotation (*RI 3293*). It has been used commercially as a specific depressant for mica in floating platinum-bearing iron sulphides.

Lead acts as a resurfacing activant for sphalerite, chalcopyrite, pyrite (at $pH > 7$), and for stibnite in sulphydric flotation, but not for covellite or pyrrhotite (*153 A 453*). It also resurfaces quartz, feldspars, and nonsilicate earth minerals in soap flotation; and barite with the fatty alcohol ester salts. It is suggested as an aid to copper flotation in a pulp treated with starch to depress molybdenite (*U. S. pat. 2,070,076*), and to aid flotation of halite from sylvite (*U. S. pat. 2,188,933*). (See also ***Phosphates.***)

Lignin sulphonates, particularly the calcium salt (GOULAC), are recommended for depression of carbonaceous gangues with fatty-acid, sulphydric, and cationic collectors (*U. S. pat. 2,130,574*). The amount recommended for cement rock is about 2 lb. per ton (*32 IEC 645*).

Lime is used as a carrier of hydroxyl ion (*q.v.*), and as a specific conditioner. Since it is the cheapest hydroxyl carrier, it is used for this purpose unless its specific action, as against pyrite, is undesirable, or unless the action of an anion such as silicate, sulphide, carbonate, and the like is desired additionally, when hydroxyl carriers such as the alkali salts of these ions are used. (See also Art. 46, ***Galena,*** and Art. 49, ***Gold.***) Lime is stated to be a specific depressant for quartz or talcy slimes in the flotation of silver minerals (*RI 3436*), using sulphydric collectors. Under the same conditions it depresses pyrite and, to a lesser extent, sphalerite. The action with pyrite is attributed by Gaudin (*F*) to the formation of sulphites. When present in excess in sulphide flotation it prevents galena from floating, has a definite depressant effect on the copper sulphides other than chalcopyrite (*123 J 758*), and produces tough slimy froths and low-grade concentrates (*RI 3328*). The effect of lime on dispersion of gangue varies with the ore; some experimenters (*RI 3328*) assert that low lime causes flocculation and high lime deflocculates; others that high lime flocculates gangue to an extent that separation is poor (*123 J 931*).

At POTOSI (*IC 6706*), where it was desired to increase contact time of lime with the pulp for depression of pyrite in zinc flotation, it was found that if the collector and frother (butyl xanthate and cresol) were added in the ball mill, lime could be used to replace soda ash in lead flotation up to pH 8 without bad effect on flotation of galena.

For methods of feeding see Art. 34.

Lime for use in producing alkalinity or for precipitation of soluble salts should be calcium lime; dolomitic lime is undesirable for the reason that the contained $Mg(OH)_2$ is substantially inert in the circuit on account of its relatively slight solubility. On the other hand, the magnesium hydroxide is available for neutralization.

Milk of lime for flotation use should be slaked with more than ten times the theoretical quantity of water, since such milk is substantially slower settling than lime added directly and almost twice as rapid in reaction (*120 J 1016*).

Tests at UTAH (S. E. Stein, *PC*) indicated that of 6 lb. of lime per ton added to the pulp, 0.8 lb. was consumed by the new water, 3.1 lb. by some nonmetallic solid in the ore, and about 0.1 lb. by Cu and Fe salts leached from the ore. Much of the remainder was leachable with time from tailing.

Mercury or a mercury salt with a sulphide, in relatively large quantities, with sulphydric collector ± oil is recommended for flotation of gold (*U. S. pat. 2,097,608–9*).

Metallic ions naturally present in ore pulps are the bane of the flotation operator's existence. In large excess any one of them may be expected to prevent flotation of any mineral with any anionic collector, the most acid (Zr, Th, Al, Fe, Cr) being the worst offenders (*79 A 50*). The heavy-metal ions are activators generally for nonsulphide minerals, the effect being more marked with the nonsilicates, and greatest on the alkaline side. For the effects of those metals most common in ore pulps or added in operation as activators or depressants, see under the specific ions.

Oxidation is a form of activation for sulphide minerals in that it is a necessary preliminary to flotation when using known collectors and known methods of effecting collector coating (Art. 3). The fact that it normally takes place spontaneously during grinding, classification, and in the flotation cell has led to its being generally overlooked. But with heavy sulphide ores the oxygen dissolved in the mill water is used up so rapidly that oxidation is incomplete in the usual grinding treatment and special aerators must be used to complete such conditioning.

In actual milling at NORANDA (Q) no method or reagent combination yielded satisfactory differentiation between chalcopyrite, pyrite, and pyrrhotite without adequate aeration of the pulp in the grinding circuits or at least prior to flotation. Laboratory flotation of some types of NORANDA ores is satisfactory without aeration, but duplication has not been possible. On average NORANDA ores 20 min. aeration is usually sufficient; occasionally 40 min. is necessary, particularly when the pyrrhotite content is above 55%. Optimum times are determined by laboratory tests. In controlling mill work there, the amount of thiosulphate found present in the pulp is used as a measure of the requisite aeration. The thiosulphate has no effect on flotation. The aerator used at Noranda is shown in Fig. 3. It comprises a circular tank about 9 × 15 ft. with 4 rubber air-lift pipes *a*, a plurality of radial air-inlet pipes *b* of different inward extension, and a slow-moving rake mechanism at the bottom. Feed, introduced at the top, overflows into annular launder *c*.

Parsons (*123 J 757*) warns against excessive oxidation of complex ores. He recommends a quick journey from the face to the flotation machine and, if necessary, high circulating loads or thinner pulps than usual in the grinding circuit, or the addition of suitable reagents in the circuit to minimize either the oxidation or its results.

At ALDERMAC, with ore similar to that at Noranda, it was found that aeration to oxidize prior to chalcopyrite-pyrite flotation increased xanthate consumption and decreased copper recovery. This is consistent with general experience with high $FeSO_4$ concentration. Oxidation by blowing was, however, necessary for flotation of pyrrhotite, using amyl xanthate. At PECOS (*IC 6605*) oxidation in stopes activates pyrite; if it is excessive, the amounts of lime and cyanide required to depress the pyrite lower the recoveries of Au and Cu considerably and even Pb recovery is decreased somewhat.

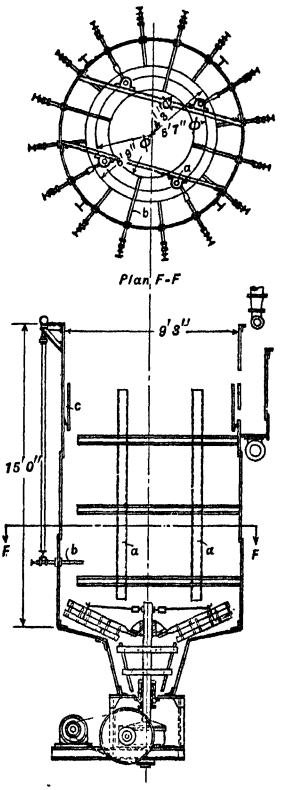

FIG. 3. Noranda aerator.

Arsenopyrite similarly needs more oxidation than is normally effected in preparation for flotation. Heavy-metal pulps to which sulphide ion is added must be freed of excess before good flotation can be effected. Dichromates, permanganates, or bromine water have been used experimentally with some benefit for oxidation in sulphide pulps, but such use is rare in operation; they must be used sparingly and should be exhausted before reducing-type collectors are added to the pulp.

Organic colloids are depressants. Some, such as glue, gelatin, albumin, dried blood, casein, and whey, are of protein character, comprising aggregates of large molecules, each molecule having a plurality of hydrophilic groups of both basic and acid nature, *i.e.*, amine and carboxyl. Others are complex polyhydroxy carboxylic acids and glucosides of high molecular weight, such as tannin (also called TANNIC ACID) licorice, saponin, and quebracho extract. Yet others are carbohydrates, *e.g.*, the dextrines and starch. These substances all form multimolecular aggregates (MICELLES) when dispersed in water. The micelles have the property of precipitating upon solid surfaces, probably either forming

definite compounds with some ingredient, as is the case with tannin and iron, or static neutralization complexes or floccules between charged ionized solid surfaces and ionized groups at their own surfaces. Whatever the mechanism, the fact of coating is well established and the coated surfaces resist collector coating and levitation. The protein substances accelerate slime coating. If added in large quantities, the colloidal depressants generally prevent flotation completely; in restricted quantities the depression is selective, possibly not due to selectivity in the coating, but to different levitation tendencies equally diminished.

Uses. GLUE and STARCH have been used to depress graphite (*U. S. pat. 1,906,029; RI 3397*), mica, and talc. They are recommended (*U. S. pat. 2,019,306*) in amounts of about 0.3 lb. per ton for depressing sulphides in lightly deslimed pulps. It is reported (*PF 108*) that a limited amount of GLUE permits flotation of blende from galena. STARCH was used successfully in laboratory flotation of cerargyrite with xanthate to depress an iron oxide-talc slime (*RI 3436*). It is reported (*40 CIMM 691*) as a depressant for fusain in flotation of coal with cresol. STARCH in so-called soluble form (prepared by making a thick paste of starch and cold water, adding one part caustic soda for each 4 parts starch, diluting to 20 volumes with water, heating to boiling and then cooling) is recommended in small quantities (<2 lb.) for depressing molybdenite in xanthate flotation of copper sulphides (*U. S pat. 2,070,076*); excess depresses the copper minerals also. Pulp made alkaline with lime is preferred for the separation. At RAUB AUSTRALIAN mill (*141 #6 J 35*) CAUSTIC STARCH was used to help settle flotation concentrate. Gardner and Ray (*134 A 146*) show that it is an effective flocculant for bituminous coal slurries and for various ores. TANNIC ACID is reported better than QUEBRACHO EXTRACT for depression of calcite and dolomite in soap flotation of nonsulphides (*RI 3437*). It is also said to aid selectivity with both anionic and cationic collectors (*U. S. pat. 2,205,923*). Clemmer *et al.* (*153 A 547*) state that it has mild flocculating properties; that in the flotation of silica from magnesite it reduced the amount of anionic collector required as did several inorganic flocculants such as alum and lime. The DEXTRINES are recommended for depression of carbonaceous gangues in gold flotation (*e.g.*, MOTHER LODE ores), the YELLOW CORN DEXTRINE, in amounts of 4 to 6 lb. per ton, being reported superior to white corn and yellow- and white-potato dextrines (*U. S. pat. 2,145,206*). Average consumption is <0.5 lb. per ton. Cost is about 7¢ per lb. (1940). The DEXTRINES should be fed as dilute (2 to 5%) aqueous solutions, which should be prepared daily. They have some frothing power, which is not, however, pronounced when the quantity added is less than 0.5 lb. per ton. They have some depressing effect on secondary silicates such as talc and sericites. Quick conditioning, as in a pump, and stage addition are recommended.

QUEBRACHO is recommended as a depressant for sphalerite and carbonaceous gangue in floating galena with sulphydric collectors and for calcite in floating fluorite with fatty acids (*U. S. pat. 2,168,762*); it is reported to depress sulphides more strongly than fluorite in such flotation, and to depress fluorite less than TANNIC ACID does (*RI 3437*). It is a highly effective dispersant for slime gangue in soap flotation. It is recommended as more dependable and less difficult to handle than metal salt-silicate (*vide*) in depressing calcite from barite or scheelite (*RI 3419*). The experimenters warn that excess depresses all minerals; that the optimum quantity varies with the collector, the pulp density and the *p*H; and that heavy-metal salts must be precipitated or complexed before addition of quebracho, since the reaction products (characterized as heavy-metal tannates) are powerful depressants of fluorite as well as of calcite and silicates.

It was found at IDAHO-MARYLAND (*133 J 344*) that SOLUBLE STARCH raised the grade of gold concentrate from about 1.0 to >6.0 oz. per ton by depressing talc and mica; excess tended to depress the gold-bearing sulphides, but this effect was overcome by adding copper sulphate.

Phosphates of both the heavy metals and of Ca and Mg are relatively insoluble, hence phosphate ion is used both to precipitate these metals and also to close the surfaces of and depress their nonsilicate salts in soap flotation.

The *ortho* tribasic salt is ordinarily used for precipitation; the *meta* is most effective in depression, the *pyro* definitely less effective, while the *ortho* salts are substantially worthless (*U. S. pat. 2,040,187*). Rose and MacDonald (*ibid.*) assert that the *meta* salt depresses calcite, apatite, barite, witherite, fluorite, chromite, bauxite, and cassiterite, the effectiveness being roughly proportional to the concentration, which differs, for a given degree of depression, with the mineral. Sodium hexametaphosphate (CALGON) is reported as a depressant of iron oxides in soap flotation of kyanite (*RI 3473*); of calcite and pyrite in cationic flotation of talc (*RI 3484*); and of clay and grit in cationic flotation of mica (*RI 3427*); it is said to have activated chromite and depressed calcite with soap, the action having been aided by either $FeSO_4$ or $Pb(NO_3)_2$ (*RI 3397*), and to have been useful in preventing activation of silicates by Fe and Al in floating bauxite (*RI 3586*). Tetrasodium pyrophosphate has been used to complex iron (*134 A 76*). Wark and Cox (*134 A 7*) report that phosphate ion activates oxidized lead minerals; the phosphate of lead is very slightly soluble, hence this is probably surface closure to an extent that prevents the formation of an unlike-oriented collector multi-coat. Sodium hydrogen phosphate activates anglesite for ethyl xanthate; considerable excess can be tolerated by galena, but very little by anglesite (*134 A 18*). AMMO-PHOS (crude mono-ammonium phosphate) is recommended for use with mercaptobenzothiazole for oxidized lead ores.

Quebracho. See *Organic colloids*.

Reduction has not been practiced as a conditioning operation in commercial flotation. Wark (*PF 117*) reports use of PYROGALLOL as necessary to effect contact with pyrite, chalcopyrite, and bornite with certain dithiocarbamate collectors. Callow (*CU*) used

acetylene and illuminating-gas atmospheres in the grinding mill to condition manganese oxide ores. It is not improbable that suitable reducing conditioning of metallic oxides such as cassiterite and hematite would improve their flotation by permitting the use of sulphydric collectors. See also *Chromate.*

Silicate ion is added to pulps in the form of a sirupy liquid, comprising an aqueous solution containing many hydrates of salts which may be considered integral compounds of Na_2O and SiO_2 with a silica-to-soda ratio varying between 1 and 4. Ratios of 2 or 3 are preferred. The mixture goes by the names SODIUM SILICATE and WATER GLASS. It carries a certain amount of free alkali, but with ores that are acid or contain much soluble salt, soda ash is usually added as a protective to prevent gel formation.

The cheapest form in which to purchase is dry, making up the liquid reagent with steam; this yields a product containing about 40% of sodium silicates, to be further diluted as desired.

SOLUBLE SILICATE is the reagent most used to depress quartz and silicate minerals and to disperse siliceous and iron-oxide slimes. The probable mechanism in depression is surface closure by mass-action effect, while dispersion, which requires the smaller amount of reagent, produces silicate surfaces, ionization of which, however, is not so completely suppressed. Excess of reagent causes weak, brittle froths and depression of all minerals. Sodium silicate tends to prevent precipitation of calcium soaps from hard waters.

Metal salt-silicate treatment comprises co-addition of sodium silicate and a heavy-metal salt, *e.g.*, $Pb(NO_3)_2$, $CuSO_4$, $FeSO_4$, $Al(NO_3)_3$, $Cr(NO_3)_3$. The result is a much stronger depressant effect than that obtained with alkaline silicate alone, and one that is effective for nonsilicate nonsulphides. By judicious use calcite is depressed and fluorite floated (*RI 3437*); calcite and fluorite depressed and scheelite floated (*40 CIMM 691*); and quartz depressed and cassiterite floated (*135 J 125; RI 3397*). Conditioning time as well as concentration is vital (*RI 3419*). The mechanism postulated (*RI 3239*) is resurfacing of the depressed mineral by the metal ion, formation of the metal silicate by reaction with the metal ion, and depression of the silicate by the mass-action effect of excess silicate ion in solution.

Silicate ion precipitates cationic collectors. Rose (*32² CIMM 535*) states that it may be used to suppress iron ions at pyrite surfaces in lieu of or in conjunction with lime.

Feeding should be as a dilute (5 to 10%) aqueous solution. Dilution to this strength is aided by heat.

Soda ash, sodium carbonate. See *Carbonate ion; Hydroxyl.*

Sodium sulphide. See *Sulphide ion.*

Starch. See *Organic colloids.*

Sulphide ion, normally added in the form of sodium sulphide, is used principally in flotation of oxidized metalliferous ores. Its function in such service is to prevent wasteful and ineffective multi-coating by collectors; it does this by first producing a sulphide coating and then retarding reoxidation sufficiently so that the subsequent collector-coating is substantially a mono-film, like-oriented and effective (Art. 3). Rey (*134 A 24*) postulates that the function of sulphide ion in flotation of cerussite and anglesite is to decrease the concentration of metallic ion in an ionic cloud surrounding the relatively soluble surfaces, this cloud otherwise precipitating diffusing collector ions and thus preventing access to the metallic ions anchored in the solid. Allen (*A TP 371*) states that when using oil with sulphydrate collectors, sulphide ion tends to raise pyrite. EXCESS of sulphide ion prevents collector coating by maintaining the relatively insoluble sulphide films at the particle surfaces; it is indicated by barren watery froths. Excess also causes penetration of the sulphidizing reaction, forming a sulphide multi-coating which is fragile and easily removed by the agitation necessary to produce subsequent oxidation. Higher excess can be tolerated by cerussite than by galena (*139 A 18*). It follows that the best procedure is to make a number of limited additions of sulphide ion (STAGE ADDITION), preferably alternating with similar stage addition of collector, but the latter practice is not necessary if the reducing atmosphere of the pulp is closely controlled so as to prevent more than monomolecular reversion at any time.

Commercial use of sulphidizing is limited to flotation of cerussite (Sec. 2, Art. 29) and attempts at bulk sweep-up of oxidized sulphides in gold flotation (Sec. 2, Art. 22). Na_2S has been used at MIDVALE (*IC 6492*) and BALMAT (*IC 6574*) to reactivate pyrite after differential flotation of galena and sphalerite, and experimental reactivation of pyrite and arsenopyrite after depression with $FeSO_4$ in acid solution is reported (*RI 3370*). In general oils are used as supplementary collectors when sulphidizing is practiced. Oxidized copper ores are floated with soap (Art. 51). Anglesite and the lead oxides, the oxidized zinc minerals, chrysocolla, gold, and the oxides of iron, tin, manganese, and chromium cannot be sulphidized satisfactorily. Cerargyrite does not require sulphidization (Art. 51).

At SAN FRANCISCO MINES OF MEXICO (*A TP 371*) sodium sulphide was necessary in galena flotation whenever the amount of soda ash required to maintain alkalinity in the lead circuit increased, indicating oxidized ore.

Sulphide ion has marked depressant effect on flotation of sulphide and of free gold when using anionic collectors. The mechanism is a combination of surface closure by sulphide films more insoluble than collector-coating films and resistance to reoxidation. Sphalerite, which is much more soluble than the other sulphides, is depressed as against the lower xanthates but not against cetyl xanthate; the others are closed also against cetyl. Wark and Cox (*134 A 7*) give critical concentrations of hydrosulphide ion necessary to prevent bubble attachment with ethyl xanthate in normal concentration as 0.01 mg. per li. for galena; chalcopyrite, 0.30; bornite, 1.3; covellite, 1.7; pyrite, 2.5; chalcocite, 6.4. The silver sulphides are also depressed at very low concentrations. The order is roughly that of decreasing resistance of the minerals to oxidation under atmospheric and pulp conditions. With mixed sulphide-oxide ores practice is to float the sulphides before starting sulphidizing. Excess of $S^{=}$ is readily removable by Pb^{++} or Cu^{++}; use of MnO_2 is also reported (*RI 3419*).

Because of the depressing action of EXCESS sulphide, close control of addition is necessary. Periodic tests of filtrate from pulp samples taken at critical points in the circuit should be made with lead acetate solution. If other than a faint dark coloration is observed on addition of the acetate, sulphide addition should be adjusted to this test color.

Sodium sulphide is also used as a self-buffered source of hydroxyl ion for dispersion of slimes in nonsulphide flotation. It is reported (*RI 3328*), however, that with some slimes, even within the buffered range, complete flocculation occurs at some concentrations of the reagent and good dispersion at others.

Fused sodium sulphide contains about 30% Na_2S. To dissolve in the mill, circulate the required amount of water to make a given strength over the solid supported on a screen. It should be prepared immediately before use. Dewatering before addition will reduce the quantity required by removing precipitating ions and increasing concentration of sulphide ion.

Thiocarbonates have been recommended as a source of sulphide ion. They have the advantage of keeping the concentration down, but are expensive. Barium sulphide has been suggested as a possible cheaper source (*23 % 13 MJA 7*).

Wark (*PF 182*) reports that sulphide ion is not a depressant for sulphides when cetyl trimethyl ammonium bromide (cationic) is used as collector. The report covers conditions, however, in which relatively tremendous quantities of collector were used and is to be weighted accordingly.

Sulphite ion, added either as the sodium salt or formed following introduction of SO_2, will depress sphalerite and permit galena to float with sulphydric collectors. The action is accentuated by co-addition of $ZnSO_4$. The operation requires close control and is not as effective as that with cyanide, but does not have the disadvantage of gold dissolution and loss.

Christman (*TP 17 AC*) postulates the formation of metal-sulphite complex anions similar to those formed with cyanides, quoting Ephriam (*Anorganische Chemie, p. 429*) to the effect that such ions form with Fe, Co, Ni, As, Cu, Zn, Ag, Cd, Au, and Hg but not with Pb. Other sulphoxy ions less oxidized than sulphate, *e.g.*, thiosulphuric and the various polythionic acid ions are recommended for the same service. Excess of the lower sulphoxy reagents tends to depress all sulphides.

At ST. JOSEPH LEAD CO., Hughesville (*IC 0447*), use of sodium sulphite instead of $ZnSO_4$ and NaCN lowered the zinc in lead concentrate from 6.5 or 7% Zn to 4 or 4.5%; excess had no effect on lead recovery.

Sulphuric acid. See *Hydrogen ion.*

Tannic acid. See *Organic colloids.*

Wetting agents have been used as dispersants. Those which contain sodium silicate, sodium phosphate, or free sodium carbonate undoubtedly function largely because of these ingredients. But with respect to the great majority of them no generalization as to suitable chemical structures can be made as yet. The most that can be said is that the characterisation "Detergent" in tables such as those presented at *31 IEC 66* and *33 IEC 16* may be taken as a pointer, whereupon, if the chemical type does not clearly mark unsuitability, the substance is worthy of trial for cases that cannot be handled by better known reagents. Many of the reagents are violent frothers, which is likely to be a disadvantage, in that it divides froth control.

Zinc ion, added as zinc sulphate, is used together with cyanide ion and with sulphite ion to increase their depressant effects on sphalerite. The action with cyanide is reported to be better if the two salts are added in stoichiometric proportions to make $Zn(CN)_2$ and this salt is precipitated before addition. The instability constants of the Cu, Ag, and Hg cyanide complexes are lower than the solubility product of zinc cyanide, so that cyanide ion thus added is available for preventing activation. At the same time the concentration of cyanide ion is thus held low, which tends to conserve the supply against consumption by other reactants, such as iron, which are not activators for sphalerite. It is also true that in the presence of excess zinc cyanide, zinc cyanide should precipitate at the sphalerite surface and tend to reduce the availability of zinc ions there for coating reaction with

fatty-acid ions introduced into the pulp by lubricants. Any excess of zinc ion in solution would tend to react with and precipitate such accidental fatty-acid ions before they reached the sphalerite-particle surfaces. Zinc sulphate alone is reported to have a depressant effect on sphalerite in differential flotation; the reason for such action is obscure, barring the presence of more than the usual amount of lower sulphoxy ions from oxidation of large amounts of iron sulphides co-present.

Wark and Cox (*112 A 225*) show that high concentrations do not affect bubble attachment to sphalerite in the presence of copper ion when using ethyl xanthate as collector. Sutherland (*153 A 453*) reports that it also has a depressant effect on chalcopyrite in the presence of cyanide, but that it has no substantial effect on the amount of cyanide required to depress pyrite.

LEVITATION

The attachment of air bubbles to collector-coated mineral particles, and the subsequent separation of the air-mineral aggregates from nonbubble-bearing particles by differential sedimentation and skimming of the float is called LEVITATION.

11. BUBBLE ATTACHMENT

A BUBBLE is a gas- or vapor-filled hole in a liquid. The mechanism underlying cling of a bubble to a solid surface is completely unknown today except in so far as explanation is comprised in the statement, based on the second law of thermodynamics, that when a bubble clings to a particle in water in static equilibrium the system has reached a level of minimum potential energy for the conditions prevailing. This is, of course, sound, but not particularly informative as to the forces acting.

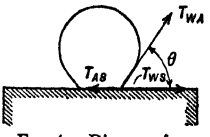

FIG. 4. Diagram for Young equation.

Attempted explanation usually proceeds along the following lines (*PF; 13 MMt 282; 17 MMt 339*). The Young equation expresses the equilibrium relationship between the forces involved in spreading, as shown in Fig. 4.

$$T_{WS} + T_{WA} \cos \theta = T_{AS} \qquad [1]$$

T_{AS}, T_{WA}, and T_{WS} are the surface tensions of the air-solid, water-air, and water-solid interfaces respectively, and θ is the contact angle through the water. T_{AS} and T_{WS} cannot be measured. But from the second law of thermodynamics, the work per unit area done in peeling off such a bubble is

$$W = E_{WA} + E_{WS} - E_{AS} \qquad [2]$$

where E is interfacial energy per unit area. But E_{WA} is numerically equal to T_{WA}, etc. Hence, combining equations 1 and 2,

$$W = T_{WA} - T_{WA} \cos \theta = T_{WA} (1 - \cos \theta) \qquad [3]$$

Total work is, of course, WS, where S is the area of air-solid contact at equilibrium. This equation tells nothing, of course, about the force required to pull a bubble away. Observation teaches, however, that the greater the value of θ, the greater the adhesive force.

Lifting by bubbles has usually been accounted for by a force diagram such as that shown in Fig. 5, item *a*, equilibrium conditions being stated by the equation $W = \sigma l \cos (90 - \theta)$, where $W = V(\delta - \rho)$, when W = weight supported by the surface forces, V = volume of the solid (shaded) body, δ = specific gravity of solid, ρ = specific gravity of liquid, σ = surface tension, l = length of 3-phase contact line, and θ = angle of contact measured through the liquid phase. Wark (*PF*) reports, however, having loaded a hydrocarbon-coated zinc plate thus floating to an extent many times greater than could be supported according to this equation; and at Columbia University such loading has been carried to the point that W = approx. $10 \sigma l \cos (90 - \theta)$, when the loading of the plate was far from shockproof.

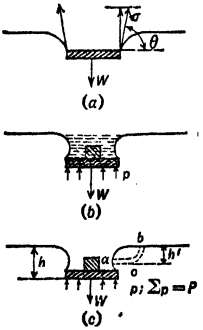

FIG. 5. Floating plates.

Experimental work at Columbia indicates that the supporting force is equal to the weight of liquid displaced by the floating system, according to the principle of Archimedes. A circular paraffin-coated disk, loaded to the limit and floating in water, shows in a diametral vertical section a configuration such as that indicated in Fig. 5, item *b*, and $2p = vp = W$ where v = the volume indicated by horizontal dotted hatching, to within less than 1%.

The analysis of the mechanism of capillary rise (see *Adam*) shows that the pressure on the liquid side of a convex liquid surface, as at *a*, Fig. 5, item *c*, is greater than that under a plane surface, as at *b*. Hence if *acb* is considered to be any liquid-filled theoretical

tube in the mass of liquid, liquid must stand higher than a therein, *i.e.*, at b, according to the relation $a - b = h'(p - \alpha)g$, where α = sp. gr. of the gas (H_2O = 1), and g = gravity constant. The total upward pressure on the under side of the plate is, of course, by the ordinary methods of hydraulics, $P = Ah\rho g$, where A is the mean horizontal cross-sectional area of the displaced fluid (neglecting the additional pressure due to the substituted gas).

When particles, small in comparison to bubble diameter, cling to bubbles, they normally arrange themselves with their largest flat surfaces in the gas-liquid interface. This corresponds to the equilibrium position for the disk pictured in Fig. 5, and is in accord with minimum-energy requirements.

Contact angles are a measure of the adhesion between bubbles and particles. This follows from the fact that spreading is spontaneous once contact is established, which means that an energy reduction is occurring; the greater the spread before equilibrium is reached, the greater the energy reduction. But large spread corresponds to large contact angle, whence the larger the contact angle the more work must be done to dislodge the bubble. This conclusion is confirmed by experiments with bubbles generated electrolytically on surfaces variously coated, which showed that bubble volume at the time of release (maximum upward pull) increased with contact angle as in Fig. 6.

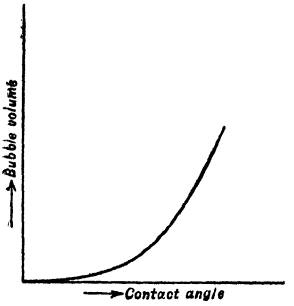

FIG. 6. Bubble adhesion *vs.* contact angle.

Rapidity of establishing contact between bubbles and coated particles varies greatly in contact-angle tests with different collectors, and with different solution environments with the same collector. Under favorable conditions the captive bubble on near approach to the particle surface appears to jump thereat; under other circumstances the bubble must be pressed so hard against the surface that it is compressed vertically to two-thirds to one-half its original diameter and may then not make contact for many seconds. It is probable that the variable rates of flotation in practice are due, in part at least, to the same phenomenon.

It has been established (*CU*) that maximum contact angles and maximum rapidity of contact are obtained with galena, chalcocite, calcite, and barite, using sodium oleate as the collector, at *p*H's ranging from 6.5 to 10.5 for the different minerals, and that these points correspond to the *p*H conditions for maximum neutral soap production. The experimental results are shown in Fig. 2. The oleate film is not removed at the points of zero contact, as is evidenced by the fact that there is immediate return to the water angle, *i.e.*, that corresponding to *p*H 6 to 7, when the particle is transferred (with precautions against drying) to water. The varying resistance to drying is attributed to the presence of H and OH ions introduced reversibly into the surface-reaction soaps in the acid and basic ranges respectively, these, probably (*153 A 500*), causing the affected soap molecules to loosen from the solid surface and re-orient, reactive water-avid end outward, thus decreasing the drying tendency of the hydrocarbon surface.

The curves of Fig. 2 probably point the explanation for the barren froths made with fatty-acid collectors in the presence of excess of alkali, *i.e.*, the alkali prevents bubble attachment although it does not prevent frothing. On the acid side frothing is also prevented or greatly depressed.

It is certain that the foregoing explanation of flotation time and maximum angle does not apply in the case of all collectors. Destruction of angle by excess of hydrogen and of hydroxyl ions with ethyl xanthate on galena has already been discussed (Art. 10). Flotation time is parallel and there is no return of angle in plain water; the coating is progressively removed.

Frothing agents affect contact. Wark (*PF 55*) asserts, on the basis of tests with bubbles aged in certain collector solutions, that oriented films of frothing agent at bubble surfaces (Art. 12) will increase the time to effect bubble attachment, because the bubble film presents water-avid groups to the particle surface, and that contact cannot be established until these are squeezed out. Actually, however, contact is established with extreme rapidity in operating bubble columns under very light pressures (the individual weights in water of the falling mineral particles) and the bubbles in these columns are heavily loaded with frothing agent by transfer from the bubbles that break at the top of the column. Furthermore a captive drop of oleic acid, at the surface of which the molecules are oriented with polar ends toward the water, makes immediate contact with surfaces coated with xanthate or fatty-acid soaps, or with solid hydrocarbon surfaces such as paraffin wax, gilsonite, or bituminous coal.

Certain frothing agents such as SAPONIN, however, destroy bubble adhesion to collector-coated minerals. This may be due, as has been postulated, to the fact that such substances tend to ADSORB (concentrate) at air-water interfaces so strongly that they form solid layers which cannot be displaced by

mineral particles. The same exclusion of mineral would occur if these substances, although not actually solidified, maintained their positions with water-avid groups presented to the coated surfaces, thus holding water against these surfaces and preventing drying. On the other hand saponin, like glue, gelatin, tannin, and the like, forms colloidal solutions in water and some of these, at least, adsorb at mineral surfaces and prevent contact.

Undissolved oils, whether of frothing type (oleic acid) or nonfrothing (neutral hydrocarbon) will, in the presence of soluble frothing agents and particles already attached to air bubbles, intrude between the bubble and the particle, leaving the particle attached at the oil-water interface. Since the surface-tension of this interface is less than that of an air-water or air-solution interface, the firmness of contact is thereby decreased.

Surface required for bubble attachment. Air bubbles will not attach themselves in water to solid surfaces which are not of hydrocarbon character. Even if the surface is hydrocarbonlike in part, as, for example, a surface of crystalline lead xanthate, no attachment can be effected, although ready attachment is obtained if the lead xanthate molecules are like-oriented with hydrocarbon ends out, as is the case with a monomolecular lead xanthate film on a particle of galena (Fig. 1).

Attachment of preformed bubbles. Air (or other neutral gas) bubbles in water will attach themselves to hydrocarbonlike surfaces under a number of different conditions. Captive bubbles (Sec. 19, Art. 22) adhere when pressed against such surfaces; more time and more force are required in some cases than in others. Under exceptional circumstances sufficient force and time to effect attachment may conjoin in an ore pulp undergoing agitation, and a preformed bubble adhere to a collector-coated mineral particle, but the occurrence is rare. The reason is that adjacent bubbles and particles are swept along by the same mass of water in the same directions, by substantially parallel forces of substantially equal magnitudes; only gravity tends to drive them in different directions; gravitational forces are not sufficient to squeeze out the water between them in a short time, while their relative velocity is too great to permit light contact of sufficient duration.

Gas precipitates from solution selectively onto collector-coated mineral surfaces under the influence of heat, reduced pressure, chemical generation of gas, or electrochemical reaction. Thus if a pair of particles, one collector-coated (*e.g.*, galena) and one uncoated (*e.g.*, quartz), is placed in a dish of clean tap water and the latter is heated slowly, gas bubbles precipitate on the galena but not on the quartz. If a similar system is placed under a vacuum or, having been subjected to super-atmospheric pressure, is removed to atmospheric pressure, again gas precipitates selectively on the galena. If a calcite particle is introduced into such a system, spaced well away from the galena, and sufficient acid is added to induce evolution of CO_2 at the calcite surface, gas bubbles will shortly thereafter appear on the galena, despite that close observation shows that no bubbles generating at the calcite surface have moved through the water to the galena. Finally, if the mineral-particle members of the system are made individually a pole of an electrolytic cell, gas precipitates on the galena but not on the quartz.

Selective gas precipitation is explicable (*36 JPC 130*) on the basis that vapor pressure is inversely proportional to surface tension. The interfacial tension between two liquids immiscible in each other lies between their individual surface tensions against air. Assuming that the interfacial tension of a solid hydrocarbon against air is not greatly different from that of a liquid hydrocarbon against air, which is of the general order of 20 to 30 dynes per cm., the interfacial tension between water and a hydrocarbon surface should be somewhere between 30 and 72 dynes per cm. The surface tension of a flotation pulp against air is of the general order of 60 to 65 dynes per cm. The surface tension of water against a natural salt is higher than that of water against air, since the surface tension of molten salts against air is higher than that of water against air, and surface tension increases with fall in temperature. Hence the surface tension of solution against hydrocarbon-coated mineral is the lowest tension of any of the pairs involved, and vapor pressure should, therefore, be the highest at this interface. Hence when the aqueous solution becomes subject to conditions that cause evaporation (heat, pressure reduction) the vapor releases at the surface of highest vapor pressure, which is the hydrocarbon surface.

Bubble removal at breaking of bubble-particle contact occurs by PEELING, *i.e.*, by sliding of the 3-phase line along the solid surface, when the contact angle is less than 90°. Such peeling is the more difficult the more minutely jagged the solid surface is. This is because of an edge effect, noted by Coghill and Anderson (*22 JPC 237*).

These authors accredit to this phenomenon the fact that the ordinary tumbler (which is greasy) can be superfilled. Fig. 7 shows the application in flotation. In item *a* three positions of one wall of a peeling bubble are represented. At 1 the equilibrium position with contact angle θ is shown on a plane surface of the solid. At 2 the equilibrium position with the edge is shown. In order to swing around the edge into position 3 the water must be bulged as indicated. This involves setting up excess surface pressure in the concave surface of the liquid in the region of *s*, to do which additional force must be applied. This is, in part, supplied by the tendency of the overhanging liquid to slump down under the in-

fluence of gravity. Advance across a depression in the surface and across a depressed edge is shown in items *b* and *c*. As in item *a*, the advancing edge of water across the plane bottom of a trough is shown in item *b*, position 1. The position at the depressed edge is shown by 2. In order for the water to reach position 3 in item *c*, water must be pushed away from the surface into a position as at *x*, item *a*, against the gravitational pull, or else water must distil from the surfaces of low curvature adjacent to *y* in item *b* into space *y*. Additional energy is needed to effect the displacement and time to effect the distillation; either slows down the progress of the water. In item *d*, in order for the advancing liquid to surmount

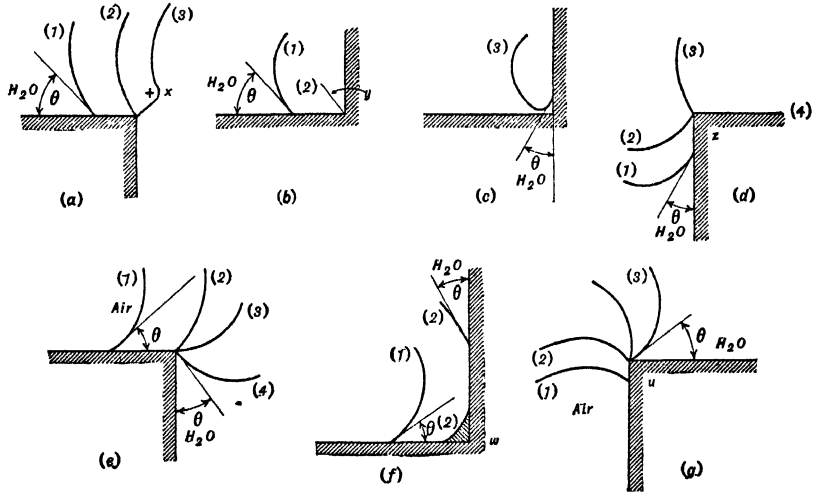

FIG. 7. Edge effects in bubble spreading and removal.

the edge *z* from position 2 to position 3 enough work must be done to raise liquid above the level of the face 4 without any appreciable movement of the 3-phase contact line. This is equivalent to the heaping up of water in a tumbler.

Spreading of bubbles is hindered on rough surfaces by the converse of the phenomena discussed in bubble removal, but this hindrance is not normally so great as the hindrance to removal.

In item *e*, Fig. 7, the bubble wall advancing from position 2 to position 4 must flatten the bubble, thus increasing its area and surface energy and also lowering its center of gravity and increasing potential energy. Since such energy increases require work to be done they tend to hinder bubble spreading. In item *f*, when the advancing bubble reaches 2 it bridges across the depressed corner *w*, leaving a body of liquid in the corner, as indicated by hatching. This tends to hasten spreading, although liquid islands are thus left behind within the confines of the bubble as the 3-phase contact line moves on. In moving around the corner buoyancy aids the rise of the bubble wall, and since there is no appreciable tendency to increase concavity on the liquid side of the air-water interface, in rounding the corner, there is no energy increase at this interface and no additional work need be done on this score.

Hysteresis of contact angle. The difference in the forces required for bubble spreading and bubble removal is the cause of the so-called hysteresis of contact angle, much discussed by early writers on flotation. Their contact-angle measurements were made on rough and contaminated surfaces to which water was applied and over which it was caused to flow by gravity. All such particles showed contact angles because of their contamination. The advancing angles were always larger than the receding. Since the extent of contamination was always greater on the minerals which reacted with fatty acids (Art. 3), the hysteresis was greatest with these. Thus arose Sulman's theory (*29 IMM 44*) that the magnitude of hysteresis, which he attributed to inherent floatability, was an indicator of floatability.

Flocculation. See Art. 42.

Flotation machines. The ways in which the principles of levitation are employed in separation of collector-coated particles from pulps is described in Art. 19.

12. FROTHING

The term FROTHING, in flotation, means the maintenance of a body of bubbles at and above the upper surface of the flotation pulp. The liquid walls of these bubbles contain

ore particles either at rest or in motion or in both states. The functions of the froth differ according to the process of bubble attachment employed but, including all processes for the minute, froth changes the effective density of the minerals included in it to an extent that permits them to rise instead of fall in a quiescent pulp; it permits differential draining back of gangue minerals into the body of pulp; it maintains a body of ore particles above the pulp long enough to permit such draining to effect more or less concentration; and it transports floated material horizontally to the concentrate discharge point.

A FROTH is simply a collection of bubbles. Prolongation of bubble life is, therefore, an essential element in frothing. Sufficiently long life is necessary to give time for the desired draining and horizontal transport. Beyond such time, however, further life is a nuisance, since froth is difficult to transport and dewater. The draining function is best served by a relatively large bubble froth, comparatively thick walled, with plenty but not an excessive amount of internal movement.

Theory of frothing

Pure water does not froth, and the more or less contaminated waters of mill pulps froth very little. Under the same external conditions, however, the addition of minute quantities of certain reagents, such as cresol, pine oil, etc., produces frothing, *i.e.*, increases the effective resistance of the bubble walls to external strain.

Adsorption of frothing agent. The properties of liquids that cause them to exist in film form are viscosity and surface tension. Frothing agents, when added in the minute quantities effective in flotation, do not affect the viscosity of water measurably; but they lower the surface tension, and they concentrate (adsorb) at the interface between the water and bodies of gas in contact therewith. The extent of surface-tension lowering is proportional to the extent of such surface concentration according to the Gibbs equation $\frac{d\sigma}{dc} = -RT\frac{U}{c}$, in which σ is surface tension, c concentration, U the amount adsorbed, R the gas constant, and T the absolute temperature (J. W. Gibbs, *Collected Works, Vol. I*, Longmans, Green & Co., N. Y.). The underlying bulk solution is correspondingly impoverished. Experimental confirmation of the relationship for frothing agents is reported (*36 JPC 300*). Inspection of the equation shows that when concentration is away from the surface (negative), as is the case generally with ionized compounds, surface tension will increase with increase in concentration of solute.

Variable resistance to strain. When a bubble is strained by external forces the covering film stretches; the result is that some of the underlying bulk liquid of the film is brought to the surface. Being lower in content of frothing agent, its surface tension is higher than that of the film before stretching. It offers greater resistance to the external strain. Time is required for sufficient contaminant molecules to diffuse to the surface to raise the surface concentration to the original level and correspondingly lower the surface tension. Until this happens, the increased resistance persists. The different tensions are manifestations of the familiar difference between dynamic and static surface tensions of solutions. If the original strain was not sufficient to break the strengthened film, and if the strain does not last too long, the bubble will remain unbroken. Hence the essential function of the frothing agent is to impart to the film capacity to adjust its internal stresses, temporarily at least, to increases in external strain, thereby increasing the life of individual bubbles, and so making it possible for them to collect into a froth.

Viscosity of mineral-froth films. When solid particles adhere to bubbles they assume positions such that one of the particle faces is either in the air-water (solution) interface or in the interface between the dilute solution of the bulk of the film and an oily film surrounding the gas of the bubble (~~see Art. 11~~). Other solid particles are usually present in suspension in the bulk solution in the bubble walls. When deformation of the bubble wall occurs, these particles interfere with and are forced to slide past each other. This is a phenomenon with the characteristics of fluid viscosity, *i.e.*, resistance to flow, or resistance to deformation; it is, consequently, an aid to bubble-wall persistence and, therethrough, to frothing.

If there is insufficient mineral present in the pulp to stiffen the froth, as in quartz-gold ores with little or no sulphide, or the reclaimed native copper tailing at CALUMET & HECLA, and slime gangue is also lacking, it is usually necessary to add a froth stiffener. Oils, such as destructively distilled pine oils or the coal- or wood-tar creosotes, are normally used. At ENGELS (*IC 6550*) two pine oils, one making a brittle froth and one a tough froth, were used, the proportions varied as necessary.

Coalescence interferes with froth building. Bubbles in pure water coalesce immediately on contact. Frothing agents and solids in the bubble interfaces decrease coalescence markedly. This decreases activity and hence strain within the froth, and keeps the bubbles small and structurally more resistant to strain.

Characteristics of a mineral-bearing froth. A good froth should carry the mineral load without collapse or excessive showering, but should not be so tight that gangue is carried in it, nor so tough that it persists unduly after leaving the machine. From the standpoint of workability on the machine, the froth should be lively, which is to say in active coalescence in its upper portion, but sufficiently small bubbled to support a fairly heavy load of solid, and not so tough that large bubbles (several inches to a foot or more in diameter) build at the top. Coalescence transfers solid load to underlying bubbles and affords opportunity to shake out gangue and mineral. If it occurs too low down, mineral showers back into the pulp. If bubbles are too fine and too much crowded (froth too dry), and coalescence infrequent, coarse gangue is carried over mechanically as on a screen. This difficulty is sometimes overcome by spraying clean water in a fine spray onto the surface of the froth. Tough films are usually the sign of too much neutral oil filming the bubbles and holding solid tenaciously. Overvoluminous lightly loaded froths are characteristic of excess of soapy frothing agent, and usually, also, of poor collection. Brittle froths, marked by spitting at the surface, are usually poor load carriers and permit excessive showering; they are used, however, for difficult differential work. When they are not the result of starvation, they can usually be stiffened by adding a small amount of neutral oil, which has the effect of producing heavier and more tenacious solid loading, with consequent increase in viscosity. Tough soapy froths can be embrittled by addition of pine oil in small quantities (5 parts per million of water, upward); too large amounts of pine oil prevent soap frothing.

Overfrothing is a term applied to any condition of a froth which involves an uncontrollable amount thereof; which can, in general, be corrected by a reduction in quantity of frothing agent; or which resembles in appearance and general behavior a condition thus correctible. Overfrothing in the absence of considerable quantities of undissolved oil is usually marked by a fluffy, large-bubble froth of large volume, carrying little or no ore solids. With sulphide ores the solid carried is frequently predominantly gangue. Such overfrothing is usually due to the formation of a skin of solid or semisolid character around the bubbles, ordinarily formed of colloidal materials present in the pulp. Soap is the usual offender, but glue, gelatin, saponin, and the like act similarly. The evil effect increases with increase in surface activity of the colloid. The films apparently exclude granular material mechanically from the interfaces that they occupy. Overfrothing of this type is induced in soap flotation by excess of soap or by excess of alkali; both conditions produce the same result of an excess of micellar (solid) soap in the pulp. When there is insoluble oil present, ORE COLLOIDS (gangue slimes) may similarly occupy the interfaces; this is particularly likely when a collector for these minerals is present.

At BENGUET CONSOLIDATED (*134 A 224*) a soft clayey gold ore requires treatment in a slightly acid pulp since in alkaline pulp large, slimy bubbles are formed and recovery falls off rapidly as *p*H increases. Variations in amount of slime are smoothed out by use of a 50-ft. thickener run as a surge tank preceding flotation.

Overoiling produces an overfrothing condition in which the froth is small-bubble and highly fluid and carries a heavy solid load with little or no selectivity. This condition was common in the days of oil flotation, but is rarely, if ever, met with now except in cases of accidental oil spills which find their way into the pulp stream. Another overfrothing condition which flows from overoiling is the formation of tough thin-walled froths by wood tars and creosotes when these are used as subsidiary collectors. Concentrate made by such froths is low-grade and hard to clean because of the inactivity in the froth (lack of coalescence and consequent inner disturbance), and the hindrance to bubble-column action (Art. 19) incident upon the narrow interbubble channels.

Temperature. The effect of heat on frothing is substantially negligible within the temperature range normally prevailing. In general, persistence decreases as temperature increases. On the other hand, because of the effect of temperature on the viscosity and consequent ease of dispersion of pine oil and of crude cresylic acid, it is usual experience that more frothing agent is required in winter than in summer in climates where winter temperatures are low and seasonal changes large.

Electrolytes in solution have various effects on frothing according to their character. ACID decreases frothing with fatty-acid collectors by decreasing dispersion of the collector and its contribution to the frothing effect. In general, also, acid tends to decrease froth volume, probably because it tends to flocculate slime gangue and thus decrease its stabilizing effect. ALKALI almost invariably increases frothing, but with excess the froth is usually underloaded, gangue-bearing, and generally undesirable. NEUTRAL ELECTROLYTES, when present in any concentrations normally present in mill waters, have no marked effects on frothing unless they react with and destroy the frothing agent (*e.g.*, earth-metal salts with fatty acids and soaps).

FROTHING AGENTS

Surface-tension characteristics. Frothing agents are substances which dissolve in the liquid to be frothed and which, when in solution, change the gas-solution interfacial ten-

sion. If they lower the surface tension of the solvent, the slope of the surface tension-concentration curve is negative and adsorption is positive, *i.e.*, the reagent concentrates at bubble surfaces; if they raise the surface tension, they concentrate away from the interface. Typical surface tension-concentration curves for aqueous solutions are shown in Fig. 8. Curve *C* is the type yielded by most inorganic compounds; curves *A* and *B* are typical of organic solutes. Compounds that yield type *A* curves are good frothers at low concentrations because the degree of adsorption is high and consequently the change in surface tension is large for relatively small changes in concentration. Traube (~~*37 KB 119*~~) states that in any homologous series of aliphatic surface-active substances the reduction in surface tension with a given weight increases as $1 : 3 : 3^2 : 3^3$, etc., for each additional CH_2 group. A good flotation frother should give a surface tension-concentration curve with an average slope of 1 to 2 dynes per cm. per 10 parts per million of water in the first part of the curve.

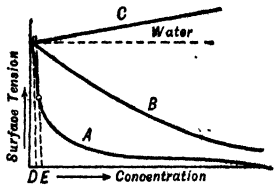

FIG. 8. Surface tension-concentration curves.

Chemical structure of frothing agents. Study of frothing agents shows (*87 A 285*) that type *B* reagents are polar organic compounds of the general structural character RA, where R is a hydrocarbon radical of any type, but normally having upward of 6 carbon atoms, and A is a polar solubilizing group such as hydroxyl (OH), carboxyl (COOH), carbonyl (CO), amine (NH_2), and the like. In alkyl compounds the solubilizing effect of the principal polar groups is $COOH > NH_2 > OH > CO$; in aryl compounds the order is $OH > NH_2 > CO > COOH$. In general the compound containing the more powerful solubilizing group is the better frother, provided both compounds are close together in solubility. Solubility for good frothers ranges normally from 0.001% to 3 or 4%. In homologous series throughout this solubility range the frothing power increases with molecular weight, *i.e.*, with the bulk of the hydrocarbon group in the molecule, up to a maximum and then falls. Bartsch (*20 KB 1*) states that amyl is the maximum in the alcohol group and butyl in the acid group.

By using yet stronger solubilizing groups such as in the strong inorganic acid esters and their salts, the salts of the tetrammonium compounds and their analogs, substituted polybasic acids, betaine salts, salts of mixed esters of polyalcohols, etc., Harris found (*134 A 82*) that the compounds of hydrocarbon groups of much higher molecular weight than otherwise could be used as frothers. Thus while cetyl alcohol ($C_{16}H_{33}\cdot OH$) is too insoluble for satisfactory frothing, cetyl hydrogen sulphate $C_{16}H_{33}\cdot SO_4H$ is an excellent frother. Others within the above classification are: sodium salt of stearyl glyceryl sulphate, $C_{17}H_{35}\cdot COO\cdot CH_2\cdot CH(OH)\cdot CH_2\cdot SO_4Na$; carbopalmitoxy methyl pyridinium bromide, $C_{16}H_{33}\cdot COO\cdot CH_2\cdot C_5H_5N\cdot Br$; stearyl malic acid, $C_{17}H_{35}\cdot COO\cdot CH(COOH)\cdot CH_2\cdot COOH$; cetyl ester of betaine hydrochloride, $CH_3\cdot NCH_2CO_2\cdot C_{16}H_{33}\cdot HCl$.

On the other hand, multiplication of solubilizing groups, holding hydrocarbon content constant, decreases frothing capacity. Thus lactic acid, $CH_3\cdot CH(OH)\cdot COOH$, is a poorer frother than propionic acid, and glycerine, $CH_2(OH)\cdot CH(OH)\cdot CH_2OH$, is less effective than propyl alcohol.

Orientation of surface films. The adsorbed surface films of frothing agents are like-oriented, with the hydrocarbon groups turned toward the gas phase (~~*29 ACS 1848, PCS*~~). A pseudo-kinetic explanation for this fact lies in the resistance of the hydrocarbon part of the molecule to wetting and the corresponding tendency of the polar groups to surround themselves by water. Negative adsorption of ionized compounds is similarly accreditable to the hydration tendencies of ions. Insoluble substances, having no attraction for water in any part of the molecule, are not broken up into molecular or ionic individuals by the water and do not adsorb; they consequently do not affect surface tension and do not cause frothing. The good frothers are those of sufficiently high proportion of hydrocarbon bulk to resist being pulled into the water body by the tendency of the polar radical to surround itself by water, but not containing such a high proportion of hydrocarbon that its solubility is too low to permit ready molecular dispersion.

Mixtures of surface-active materials may increase or decrease frothing above that obtainable by either singly according to the effect that each has on the solubility of the other. If there is no substantial solubility effect, the results are additive, *i.e.*, the addition of the second produces the same result as addition of a further equivalent amount of the first. If the second decreases the solubility of the first to the point of precipitation of some of it, without in itself adding equivalent frothing effect, the combined action will be less than that of the first alone, *e.g.*, benzyl alcohol added to amyl alcohol solution or to *m*-cresol (*20 KB 1*). If the second increases the solubility of the first and thus results in dissolving more of it, frothing increases, *e.g.*, ethyl alcohol added with nonylic acid (*ibid.*).

Ideal frothing agent should have no collecting property, in order that frothing may be controllable independently of collection; it should be intensely surface active, so that it produces frothing in low concentrations; it should be independent of kind and quantity of

solutes present in the pulp; it should produce a copious, lively, nonpersistent but nonbrittle froth; and it should not adsorb soaps or other organic colloids to the exclusion of solids (~~Dean, 186 J. 999~~). It should be liquid, cheap, and stable against storage (time) and high atmospheric temperatures. When used with ores not mined and crushed so as to contain the usual complement of lubricating oil, it should, if used in bubble-column flotation, adsorb to the extent of a second liquid layer at the bubble surfaces, or some oil must be added.

Quantity of frothing agent required varies with both the agent and the ore, but lies, in general, between 0.05 and 0.20 lb. per ton for good frothers. Bartsch (*ante*) found that with any frother in aqueous solutions there is maximum frothing at some intermediate concentration; that the surface tension at this point ranges from 54 to 70 dynes per cm. for the representative alcohols, acids, phenols, and amines that he tested; that optimum frothing for the majority occurred when the surface tension was within 4 dynes of the average for the 19 agents tested, *viz.*, 62.5 dynes per cm.; and that persistence was greater the lower the surface tension at optimum frothing.

Common frothing agents used in operating plants are pine oil, eucalyptus oil, cresylic acid, soaps, the liquid Aerofloats, mixtures of aliphatic alcohols, and sulphates and sulphonates of long-chain alcohols, the alcohol products being, in general, marketed under various trade names.

Pine oils are of several varieties. The oil obtained by steam distillation of dead pine stumps and redistilled to a close-cut fraction with an initial boiling point of about 290° to 350° F. and an end point at from 370° to 430° F. is the one most used in flotation (G.N.S. No. 5; Yarmor F). The specific gravity of these oils is about 0.92 to 0.95, refractive index about 1.48, specific viscosity about 2.5 at 70° F., color a deep straw to sulphur yellow. RISOR PINE is a lower grade with a boiling range of 420° I.B.P. to 80% at 465°, and with a slightly lower alcohol content than the preceding (*PC*, Hercules Powder Co., 1/27/38). The principal frothing compound in these oils is TERPINEOL, a hydroaromatic alcohol. There are minor amounts of FENCHYL ALCOHOL and BORNEOL. Hydrocarbons of the terpene class comprise the remaining 30 to 40%. Abnormally low specific gravities indicate adulteration with petroleum fractions; such adulteration may be determined by a polymerization test (Allen, *Commercial Organic Analysis*, Blakiston, N. Y.).

The hydroaromatic alcohols are extremely effective in emulsifying the hydrocarbons, so that with even gentle agitation the oil forms a very fine emulsion, much of the alcohol content is extracted by the water, the alcohol remaining in the undissolved hydrocarbon renders it highly surface active, so that extremely small quantities are effective (0.05 to 0.1 lb. per ton of ore), and the froth has no oily characteristics even when very deep bubble columns are carried. Ray (*U. S. pat. 2,286,374*) described emulsions of a blend of pine oil and hydrocarbons of the naphtha range together with an emulsifying agent; he named sulphonated pinene-cresol or phenol condensate, sulphated dehydroabietyl alcohol, sulphonated higher fatty-acid esters, *e.g.*, sulphonated castor oil, or the mixture resulting from heating together an ethanolamine and a vegetable oil. Such mixtures are highly surface active and yield more, and more definite, oil-water selecting interface in bubble columns (Art. 19) than is obtainable with an equal amount of pine oil.

Other steam-distilled pine oils are derived from pine needles (PINE-NEEDLE OIL), from fresh pine wood with bark on, and from pine gum (TURPENTINES).

Flotal is a synthetic mixture of alcohols and terpene-type hydrocarbons with frothing properties similar to those of pine oil. TAROLS are mixtures of steam-distilled pine oil with rosin oil. Creosote-pine oil mixtures are often used as frothers; the coal-tar creosotes stiffen froth slightly, the wood creosotes make froths that are tough and hard to clean, and tend also to carry up much middling.

Destructively distilled pine oils are obtained by redistillation of the overhead (CREOSOTES) and tars obtained in destructive distillation of live pine wood. Specific gravities and viscosities of the fractions depend upon the boiling range. Low-temperature cuts have low specific gravities (0.91 to 0.95) and low specific viscosities (@ 1.5 at 70° F.) while the corresponding values for high-temperature cuts are 0.95 to 1.04 and 3.5 to 5.0 at 185° F. Long-range cuts have lower viscosities and somewhat lower specific gravities, of course.

Destructively distilled pine oils contain aromatic hydroxy compounds and carboxylic acids in addition to alcohols. The percentage of insoluble hydrocarbons is higher than in the steam-distilled oils, and the high viscosity of these hydrocarbons makes dispersion difficult. As a result, more oil must be used to effect frothing and there is more oil in the froth. This tends to make the froth tough and the concentrate hard to clean. These oils are useful, however, in small quantities, in conjunction with more active oils, to prevent excessive froth breakage and SHOWERING (dropping of mineral from froth) when machines are being run with a restricted air supply.

Eucalyptus oil is similar in composition and frothing characteristics to steam-distilled pine oil, differing principally in that the predominating alcohol is CINEOL, which has the

same composition as, but a somewhat different structure than, TERPINEOL. It was much used in Australia in the early days of flotation in place of pine oil, on account of local availability, and is still used to some extent.

Cresylic acid ($CH_3 \cdot C_6H_4 \cdot OH$), also called CRESOL, is obtained from coal tar by distillation of the crude tar to obtain a light fraction (COAL-TAR CREOSOTE), extraction of the creosote with aqueous alkali, acidification of the aqueous extract to precipitate the mixed tar acids (homologs of phenol), and fractional distillation of the mixed acids. Crude cresylic acid, which is the usual plant reagent, normally contains considerable neutral hydrocarbon as well as some phenol and a considerable proportion of higher homologs (toluol and xylol), in which hydrocarbons are substituted on the benzene ring.

High-grade cresylic acid forms a relatively fragile froth that is easy to clean, but which tends to shower unless used with a powerful collector (one giving a high contact angle). Crude acid is a more powerful frother, if the impurities are largely toluol and xylol (indicated by higher distillation end point and low insoluble content); if the impurity is largely phenol, however, the frothing ability of the crude is lower than that of the refined acid. Insoluble oil content in the crude adds stiffness to the froth but tends to lower the grade of concentrate.

Refined acid is normally added in amounts ranging from 0.05 to 0.15 lb. per ton of ore.

Christman (*U. S. pat. 2,250,190*) asserts that isobutyl or isopropyl alkylated phenols are superior to cresol as frothers. Landolt *et al.* (*129 J 351*) state, on the other hand, that normal substituents are superior to *iso*. They also report that metacresol is superior to the other isomers, and that a refined acid containing a high percentage of this isomer is desirable.

Soaps. The soaps of the alkali metals are vigorous but otherwise highly unsatisfactory frothers. Their froths have but little carrying power, tend to load with slime, and in the presence of excess of alkali-carried hydroxyl become over voluminous and almost completely solid-exclusive. (See *Overfrothing*, Art. 12.) Earth-metal soaps are too insoluble to froth, hence water in which soaps are depended upon for frothing must be soft.

Solution of Ca or Mg soap in gas oil is described as a froth modifier (*U. S. pat. 2,208,143*). This is essentially a thinned cup grease. It has definite but sluggish surface-active capacity, which is enhanced by the presence of an active frother. It should aid collection somewhat in bubble-column machines and to that extent load down and stiffen froth.

Ammoniated talloel (AC 712) is recommended for making tough froths to aid in pulling middling when recovery is more important than grade of concentrate. It is an inflammable liquid. It should be added as a dilute aqueous solution (5 to 10%) which should be freshly prepared daily.

Aerofloats. The liquid Aerofloats (Art. 4) contain considerable residual cresylic acid, and to that extent are frothing agents.

Aliphatic alcohols of carbon content ranging from C_7 to C_{10} are powerful frothers. They are marketed under the names DUPONT ALCOHOLS, AMERICAN CYANAMID FROTHING AGENTS, NINOLS, with numbers indicative of compositions.

The DuPont series are the higher-boiling by-product fractions of the residue from the manufacture of butyl alcohols. They are identified by number as follows:

B-22: approximately 60 to 65% primary alcohols, principally 2-methyl pentanol-1; 15 to 20% secondary alcohols, principally di-isopropyl carbinol; 18 to 20% ketones, principally 2-4 dimethyl hexanone-3; 2% unidentified esters. Approximate average molecular weight, 105. Boiling range, 271 to 302° F. Specific gravity, 0.836.

B-22H is an upper shorter-range fraction of B-22 with an approximate boiling range of 284 to 302° F.; sp. gr., 0.838.

B-23: approximately 40 to 45% primary alcohols, principally 2-4 dimethyl pentanol-1; 40 to 50% secondary alcohols, principally 2-4 dimethyl hexanol-3; 8 to 12% unidentified ketones. Approx. aver. mol. wt., 123; sp. gr., 0.844; boiling range, 302 to 320° F.

B-24: approximately 43 to 47% of a mixture of primary alcohols, principally 4-methyl hexanol-1, 2-4 dimethyl hexanol-1, and 4-methyl heptanol-1; 32 to 36% secondary alcohols; 17 to 19% ketones, and 1 to 4% esters, all unidentified.

B-25 is the final residue above 382° F. from the above distillation. End point before tar is about 600° F.; sp. gr., 0.89 to 0.93. Less than 1% water soluble. When vacuum distilled the overhead product (**B-30**) is approximately 65 to 70% primary alcohols; 12 to 17% ketones; 10 to 15% phenols, principally mesitol with some 2–6 xylenol; and 2 to 6% of hydrocarbons.

B-21 is the unfractionated mixture of the above, comprising about 40% B-22, 20% B-23, 22% B-24, and 18% B-25; sp. gr., 0.86.

Amyl Alcohols is the fraction of the aforementioned by-product residue boiling between 250 and 271° F. The approximate composition is 60% 2-methyl butanol-1, 35% 2-methyl pentanol-3, and 2 to 3% ketones.

Use. Of the above alcohols, B-22, B-22H, and B-23 are used alone, the frothing power increasing generally with the molecular weight. B-24 and B-25 are not active frothers alone, but are used to add stiffness. B-21 and the Amyl Alcohols are not in commercial use (*PC, 3/20/41*) but have utility when

a fragile froth is desirable. It is reported (*21 #13 MJA 7*) that high lime causes the alcohol froths to become brittle and evanescent.

American Cyanamid Co. numbered frothers (*U. S. pat. 2,065,053*) are blends of the DuPont alcohols as follows:

AC-52 is a mixture of B-23, No. 2 domestic fuel oil, and pine oil.
AC-60 is a mixture of B-23 and No. 2 fuel oil.

Carbitols are lower alkyl ethers of diethylene glycol, $R \cdot O(CH_2) \cdot O(CH_2) \cdot OH$.

Terpineol has been used to a considerable extent in laboratory testing because, in addition to being a powerful frother, it can be completely dissolved in water and the concentration in small machines be thus controlled, and it has no collecting properties. Hence any concentration effected without added collector can be credited to contamination present in the ore, and the effects of added collectors can be segregated.

Organic sulphates and sulphonates in bewildering variety—so far as name and detailed constitution are concerned—have been put on the market under the general classification of wetting and detergent agents. For data as to makers, trade uses, trade names, and approximate chemical nature see *31 IEC 66*, *33 IEC 16*, and *35 IEC 107*. Those of them that are satisfactory frothers comprise, in simplest form, inorganic acid esters of long-chain aliphatic alcohols and the alkali and earth-metal salts thereof, RSO_4H(or M) and RSO_3H (or M). The long-chain R may also be linked to the sulphate through the residue of a polyhydric alcohol, *e.g.*, a glycol, by partial esterification of the latter with a fatty acid and then esterifying further with sulphuric acid, yielding a product of the form

$$R \cdot COOC(H,H)C(H,H)OSO_3H(\text{or M})$$

When R is C_8 to C_{12}, these reagents are relatively unaffected by dissolved salts. When R > C_{12} the reagents are asserted to be collectors (see Art. 4).

These reagents are reported (*RI 3333*) to froth excesssively in pulps of high alkalinity. Lauryl sulphate has been used at CLIMAX (*PC*) in the attempt to obtain a less tough froth than that obtained with pine oil plus a hydrocarbon collector.

Quaternary ammonium compounds are reported to be vigorous frothers (*RI 3333; PF*).

Choice of frothing agent. Of the two common frothing agents in sulphide work, pine oil is chosen when a fragile, brittle froth is required and cresylic acid when a tougher but still comparatively active froth is wanted. If a tough froth capable of carrying a heavy mineral load without showering is desired, the further addition of a small amount of a coal-tar creosote is indicated; wood-tar creosote tends to make the froth so tough that the insoluble content of concentrate is unduly high and the froth tends to build up in the concentrate thickeners.

In soap flotation the use of a minimum of excess soap and a separate frother is desirable so that collection and frothing may be controlled independently. Either pine oil or cresylic acid may be used, but the wetting agents and the C_6 to C_{10} alcohol mixtures apparently give somewhat better control.

Effect of conditioning agents. Good frothers are all nonionizing substances. When, however, they are of such nature that they form ionizable compounds with a conditioning agent, *e.g.*, phenols with strong alkalis or amines with strong acids, the ionized products are substantially nonfrothing, and in so far as such ionization occurs, the frothing effect of a given quantity of frother is decreased.

Control of frothing. The necessity for control increases with the delicacy of the separation. In one-mineral separation of sulphide from rocky gangue, control is relatively unimportant so far as ordinary operations are concerned. In ordinary differential sulphide work somewhat more care is necessary, but even here, if the neutral-oil content of the ore is low, considerable variation in frother-ore ratio can be absorbed through the action of the cleaner circuits, and the operator need only guard against loss of bubble column and runaways in the cleaner. These easy conditions flow from the sharp differentiating powers of the sulphydrate collectors as between sulphide and gangue minerals, and the great capacity of the depressant conditioners in preventing formation of hydrocarbonlike coatings on unwanted sulphides. As a result, such ores are readily floated in machines that permit little or no control of aeration; sufficient control is readily effected by relatively gross changes in quantity of frothing agent added.

When, however, the separation is delicate, as when very high grade sulphide concentrates are wanted in differential work, or as is almost invariably the case in nonmetallic work, whether high-grade concentrate is demanded or not, close control of frothing is

essential, and all available means should be provided to secure it. Usual means are: (*a*) use of flotation machines that permit regulation of the air going to the bubble column; (*b*) use of frothing agents of low viscosity and low insoluble-oil content, preferably not too powerful; (*c*) use of feeders that permit rapid and close regulation of delivery rate; (*d*) close control of ore-feed rate with prompt warning to the flotation operator of changes. In nonmetallic work these are usually preceded by more or less complete desliming of feed, and are often supplemented by the use of so-called FROTH MODIFIERS, which may be neutral oils that blanket the froth, or inorganic reagents, the mechanism of action of which is substantially unknown, but probably is different with different reagents and/or different crudes.

There are several reasons for frothing difficulties in nonmetallic work. (1) The collector is itself a frother, so that any change in quantity thereof made in response to collection demands has an effect also on frothing. (2) All of the minerals in the crude respond in some degree to the collector, and the extent of such response is dependent not only upon the mineral but upon the *p*H at which flotation is carried out (see Fig. 2; a similar condition prevails with amine-type collectors). (3) Slimes, both valuable-mineral and gangue, are readily held at the oil-water interfaces in the bubble columns, and have a remarkable stabilizing effect on the froth. They also, because of the small effect of gravity on them, tend to adhere to bubbles while larger particles of mineral are shaken off, with the result that they appropriate much of the oil. If enough oil and, necessarily, additional soluble collector are added to bring up granular material, the volume of froth becomes so great that the cell runs away, while if air supply to the column is held down to prevent the runaway, levitation is insufficient to impoverish the tailing.

FLOTATION MACHINES AND PROCESSES

Flotation machines are customarily classified on a basis which is a hodge-podge of inventor's names, litigation catch words, and sales-department slogans. As a result their fundamental mechanisms and their real similarities and differences have been widely overlooked.

A flotation machine is an apparatus to carry out a flotation process. Legally there are many of these. Scientifically the operation called flotation is separation of unlike particles at an interface between two contacting fluid phases, one of which, at least, must be liquid. The separation is effected because of the fact that one class of particles clings to the interface and the other does not. The functions of the flotation machine are (1) to produce the separating interface; (2) to bring the particles to be separated and the interface together; and (3) to lead selected and rejected particles out of the machine by different paths. The kind of interface employed and the way in which the machine performs its three functions characterize it. A classification of known types of flotation operations is shown in Table 8.

Interfaces are liquid-liquid or gas-liquid. In all ore-flotation practice the suspending medium, which forms one side of the separating interface, is a substantially saturated aqueous solution of the ore minerals; the other phase is either an organic liquid immiscible therewith, or a gas, usually air. The suspending liquid may, however, be an organic liquid, and the gas may be any gas which is substantially immiscible with the suspending liquid.

The interface may be either internal or external with respect to the suspending phase at the time of selection. If it is internal, the process is of PULP-BODY TYPE; if at the boundary, of BOUNDARY TYPE; if wholly external, of BUBBLE-COLUMN TYPE. Boundary-type interfaces are utilized only in nonfrothing processes and bubble-column interfaces only in frothing, but internal interfaces are produced and used in both.

Creation of interfaces is effected in a variety of ways. Boundary interfaces are incidental to the flow of pulp through the machine. Bubble-column interface is created by causing air in the form of small bubbles to rise through a liquid so modified as to surface characteristics (see Art. 12) that the bubbles persist on reaching the surface, and then confining the bubbles laterally above the liquid and maintaining continuous supply of new bubbles to the under side of the mass. Internal interface is created either by agitation of a mixture of the two phases, by forced introduction of one into the other, or by precipitation of one from solution in the other.

Extent of selecting interface is important from the standpoint of speed and completeness of selection, both of these increasing with increase in extent, all other things being equal. Extent is directly proportional to the degree of subdivision of the second (nontransporting) phase; it is small with boundary-type interfaces but relatively large when

Table 8. Classification of types of flotation machines

INTERFACE	Method of attachment to interface	FROTHING (All-gravity separation)		NONFROTHING (Separation varied)	
		Place of selection			
		Internal (Pulp-body)	External (Bubble-column)	Internal (Pulp-body)	External (Boundary)
LIQUID-LIQUID	Contact			Gravity separation Bulk-oil Buoyant solid Granulation Gravity-mechanical separation Oil-magnetic	Greased-surface
LIQUID-GAS	Contact		Pneumatic Stationary mat Moving mat Air lift Cascade External pump Internal pump Subaeration (Moderate agitation) Air self-supplied Extraneous air	Gravity separation Captive-bubble Gravity-mechanical separation	Skin flotation (Top-feed) Skin flotation (Submerged-feed)
	Precipitation	Boiling Chemical-generation Pressure-reduction Vacuum Plus-pressure Violent-agitation Rotary Shaking			
	Precipitation-Contact	**Agitation-cascade** **Agitation-pneumatic** **Agitation-subaeration**		**Table flotation** **(Gravity-mechanical separation)**	

pulp-body or bubble-column interfaces are employed. It is invariably increased by increasing agitation and, with mat-type pneumatic cells, by using finely porous mats.

Bringing particles to the separating interface, or the converse, is the step in which the most fundamental differences in flotation-machine operation occur. Excluding the captive-bubble procedure (Sec. 19, Art. 22) and the thick-pulp conditioning step in table flotation (Art. 30), no procedure has yet been devised to effect contact between an air bubble and a collector-coated solid particle in the interior of the suspending phase (pulp body). Hence there are no entries under "Contact" in the liquid-gas block corresponding to an internal separating interface in Table 8. Such contact is possible only when the bubble can be mechanically pressed against the collector-coated surface, as in the captive-bubble machine or in the highly viscous heavy pulp in the table-flotation conditioners. Particles do make contact with oil droplets (which are of tremendously greater weight and momenta than air bubbles) in liquid-liquid pulps, and adhere, if the conditions are such that the oil has collecting properties (Art. 3). Air bubbles are brought to and attached to collector-coated particles in the pulp body only when preferential precipitation occurs (Art. 11). Particles and bubbles adhere by contact in bubble-column machines, where the solid in the bubble walls is constrained to flow in narrow channels directly contiguous to the selecting interfaces. In skin flotation the particles are brought to the gas-liquid interface mechanically.

Certain liquid-gas machines bring into play both contact and precipitation selection and hence appear under both "Internal" and "External" columns in Table 8. Of the known frothing machines which do this, selection by precipitation predominates in the agitation-cascade type, whole bubble-column action prevails in the others. These facts are indicated in the table by typographical differences.

Separation of rejected from selected particles takes place solely by differential gravitational settling in all frothing machines. In the nonfrothing machines, it is the sole factor in some, but in others an extraneous force is applied to move one or the other of the products to its discharge port.

SELECTION AT LIQUID-LIQUID INTERFACES

These apparatus (Table 8) represent early attempts to apply the discovery that the metallic minerals in a pulverized ore cling preferentially to an oil-water interface. The majority of the methods proposed were of the pulp-body selection gravity-separation type, in which the particles of pulverized ore, suspended in the water phase, were splashed internally against the oil-water interface and the specific weights of the resultant oil-solid systems were depended upon to cause rise or fall thereof in the impoverished aqueous pulp, while the gangue minerals were caused to take the opposite path.

14. BULK-OIL FLOTATION

In processes of this type the oil used was a crude petroleum of low specific gravity, contaminated with a fatty acid, and in some processes thickened to cause it to hang together in relatively large masses. The selecting action is illustrated by Fig. 9. The contact angle of collector-carrying oil against a metalliferous mineral surface is ordinarily of the order of 160° while that against a siliceous particle is zero. Hence at an interface AB a siliceous particle G tends to remain wetted by water and to be rejected, but a metalliferous particle S tends to pass into the oil owing to the creep thereof over its surface and the apparent pull incident upon the outward curvature of the oil (see Art. 11).

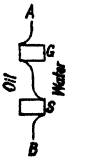

FIG. 9. Selection at oil-water interface.

Flotation occurs when the specific weight of the system composed of selected solid and oil is less than that of the pulp. The amount of oil theoretically necessary depends, therefore, on the specific gravities of the oil and pulp and the quantity of solid to be lifted. Practically such calculation is not valid, since some gangue is raised, some mineral is lost, and air entrained in mixing aids levitation markedly. The net result is that much less than the theoretical quantity of oil is necessary.

Elmore bulk-oil process (*U. S. pats. 653,340; 676,679* and *689,070*/1901; *692,643*/1902) was the best known of the oil-flotation processes proposed. It actually had mill trials. The operation consisted in first producing a freely flowing pulp by mixing pulverised ore with water in the proportions of 6 to 10 of water to 1 of ore, by weight; adding thereto a relatively large quantity of oil, up to more than a ton of oil per ton of solids, the oil being of Bunker C character with a small amount of fatty acid added; adding also sulphuric acid; mixing the ingredients in a trough provided with stirring blades on a horizontal shaft; then passing the mixture to a spitzkasten. The pulp level in the spitzkasten was kept at such a height that a slight overflow of pulp liquor was maintained. Under these circumstances the oil layer on the surface of the pulp was about one-half inch or less in thickness. The mixing was limited in violence so as not to break the oil into minute globules. Oil was recovered from concentrate by washing with solvents, filtration, centrifugation, etc. The actual oil loss is said to have been between 10 and 20 lb. per ton of ore treated. Feed must be deslimed.

For other patented methods of bulk-oil operation see *Ed. 1,787*.

Buoyant solid, such as sawdust, was added to oil to increase its lifting capacity. With this addition the oil could be broken into smaller masses, and a given weight of oil thus broken had greater selecting surface.

15. GRANULATION

This term describes a phenomenon that may be observed when finely crushed minerals, properly collector-coated, are stirred together with a relatively large amount of oil in the presence of water. Under such circumstances the minerals form with the oil a coherent mass or masses the consistency of which depends upon the kind of oil, the relative qualities of oil and mineral, and the character of the stirring. Minerals not collector-coated do not similarly granulate, hence if these are present, separation may be effected after granulation by screening or by ordinary gravity-concentration methods. Early uses and attempted uses of the method are described in *Ed. 1,944*. The only commercial use was in application to coal slurries where the large amount of oil used, amounting to upward of 50 lb. per ton of dry feed, was available as fuel in the resulting granules.

Mechanism of granulation comprises successively (*a*) selective collector-coating of the mineral to be separated, (*b*) bubble attachment by violent [illegible]tation (see Art. 19), (*c*) overoiling of the bubbles with

a neutral oil modified by a surface-active agent, as a result of which the levitated particles pass into the oil-water interface, (*d*) release of the bubbles, when the mineral-loaded oil sheath becomes heavy enough; and finally (*e*) rolling up the irregular oil-mineral agglomerates into rounded granules by slow rotary agitation.

16. MUREX PROCESS

The Murex process is a combination of magnetic separation (Sec. 13) with the differential-oiling phenomenon that is utilized in flotation processes. It is applicable to the separation of any minerals that can be selectively collector-coated. In the Murex process the oil is first loaded with powdered magnetite, then mixed with the aqueous pulp and the whole is presented in a thin film under the poles of a magnet, when the oil-coated minerals are attracted to the magnet because of the magnetite in the oily coating, while the noncoated gangue particles pass on. One oil mixture that has been used was composed of fuel oil, tar, and resin. This had the power to hold the magnetite as well as to coat sulphides preferentially.

At CLAUSTHAL (*100 J 429*) 3- to 4-mm. material was ground in a pebble mill in a thin pulp with the above oil mixture to effect coating, the product passed through a screen with 2×4-mm. openings, then spread out on a shaking table under an overhanging magnet. Galena was thus separated from barite and siliceous gangue minerals. At DARWIN LEAD & SILVER MINES (*104 J 58*) a 50-ton mill treated a partly oxidized lead-silver ore. A recovery of 80 to 85% of the mineral content was claimed at a cost of $1.78 per ton. Oil consumption was 15 lb. petroleum residuum and 0.8 lb. oleic acid; magnetite, 17 lb. per ton. See also flowsheet of MAWOHI MINES, Sec. 2, Fig. 157.

17. GREASED-SURFACE CONCENTRATORS

The usual apparatus comprises a solid surface, *e.g.*, a shaking table, moving belt or fabric, an inclined trough or the like, coated with a thickened oil (grease) or wax, over which an aqueous pulp is flowed. One class of minerals, which must be collector-coated or become so on contact with the surface, adheres while noncoated particles pass on.

These apparatus apply the same principles of selective wetting and mechanical holding by an anchored liquid that are utilized in amalgamation (Sec. 14, Art. 6). The chemical principle is that of selective collector-coating followed, usually immediately, by adhesion or spreading thereover of viscous oily liquid.

Use. Various patented methods are described in *Ed. 1, 944*. The only instance of commercial use is in diamond milling (Sec. 3, Art. 12). A recent laboratory attempt at treatment of coarse particles (*153 A 557*) consists of a cone with greased inner surface, loading selectively below water line and discharging into a launder above.

SELECTION AT LIQUID-GAS INTERFACES

All commercially successful flotation apparatus have utilized the liquid-gas interface for selection, and with one exception (skin flotation) bubbles have been used for levitation and gravity for separation.

18. SKIN FLOTATION

This is the term used to describe separation at the free boundary of a liquid. In ore flotation the liquid is water and the selecting surface is the upper boundary against the atmosphere. The force system employed to select and carry the selected material is air-water interfacial tension, and is the same as that employed in suspending the floating needle in the familiar parlor trick (Art. 11). In commercial application the feed should be deslimed, conditioned, and then brought gently to an air-water interface.

The process was developed to bring feed to the selecting surface either from above (TOP-FEED) or from the pulp (SUBMERGED-FEED). In the former case rejected material sinks through the underlying water and is removed by gravity, but with submerged feed the rejected material is moved away mechanically.

Wood top-feed film-flotation machine (*U. S. pat. 1,068,050/1914*) is typical of dry-feed apparatus (Fig. 10). It consists of two tanks *A* and *P*, filled with water. A roller *C*, covered with corrugated rubber belting and submerged with its center well below the surface of water in the tank *A*, rotates in the direction indicated. As the roller emerges from the body of liquid, it carries with it, covering its upper surface, a thin layer of water. Dry ore is fed onto the surface of the revolving roller, in a thin sheet, by means of the shaking feeder *G*; the gangue minerals tend to wet and sink into the grooves, while the minerals of metallic luster tend to float. When the floating and submerged minerals are carried over to the point where the surface of liquid in the tank intersects the surface of the roller, the floating mineral rides out onto the water surface because the surface film is continuous over the tank

and the roller. The gangue minerals remain submerged and finally fall off and settle to the bottom of the tank. At the opposite side of tank *A* is another roller *I*. An endless rubber belt *K* passes over this roller, thence in turn over pulley *R* and guide roller *M*. A gentle current is maintained from *C* toward *I* by reason of the constant addition to the surface film at *C* and constant removal at *I* by the traveling belt *K*. The surface film is continuous from the liquid in tank *A* to the liquid in tank *P* over the surface of belt *K*. Owing to the disturbance at the point where belt *R* passes below the surface of the liquid in the tank *P*, the less tightly held material in the film is shaken out and settles to the bottom of tank *P*. This material constitutes the middling of the process and is re-treated on gravity-concentration apparatus. Tailing is discharged through valve *B*. Floating concentrate overflows lip *W*, the level of liquid in tank *P* being maintained so as to overflow a thin sheet of liquid at this point.

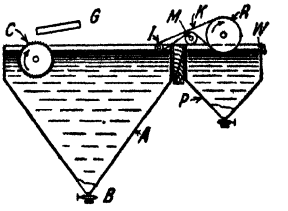

FIG. 10. Wood skin-flotation machine.

The machine as built had a feed roller 3 ft. wide, required about 0.25 hp., and is said (*44 A 684*) to have had a capacity of 1,000 to 2,000 lb. per hr.

Dry-feed machines, usually of crude form, have had considerable use in the small graphite mills in the eastern and southern U. S. No conditioning has been practiced, the accidental contamination incident to mining and crushing being sufficient to oil-coat the graphite particles.

DeBavay film-flotation process (*U. S. pats. 864,597*/1907; *912,783*/1909) was used in Australia.

Tailing from gravity concentration, crushed to pass about 40-m., was first deslimed, then fed into a mixing tank and agitated for a considerable time with cold sulphuric acid solution, about 0.2% strength, in a pulp containing 15 to 20% solids, the acid solution was decanted, the settled solid washed twice with fresh water, then thoroughly agitated with water containing about 0.02% chlorine and from 2 to 3 lb. per ton of ore of a mixture of 1 part of castor oil and 4 parts of low-grade kerosene. The oiled pulp was elevated by a monte-jus onto a series of separating cones of the type shown in Fig. 11. Concentrate floated from *A* to *B*, gangue sank and discharged through *D*. The floating material was principally froth.

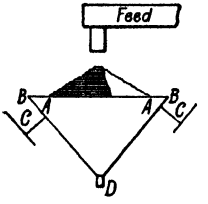

FIG. 11. DeBavay separating cone.

Macquisten film-flotation machine (*U. S. pats. 865,194; 865,195; 865,260*/1907) comprised (Fig. 12) a rotating rifled tube *b*, 1×6-ft., set horizontally, with central opening at the inlet end and full opening at the discharge end into a pointed box *d* with overflow lip. Water level was maintained in box and tube about 3 in. above the bottom of the tube so that a film of water about $1/32$ in. deep overflowed the discharge lip. Liquid pulp was introduced through the feed trough *a*. The tube made 30 r.p.m. The solids in the pulp were thus raised above the surface of pulp in the tube, water drained away, most rapidly and completely from particles of metallic luster, and, as the material slid back, the minerals of metallic luster floated in part, while the gangue minerals submerged. This operation was repeated many times as the pulp passed through the machine. Slime tends, in large part, to pass through in suspension and thus gets no chance to separate. A gentle surface current (about 10 ft. per min.) was maintained from feed to discharge end. When the submerged solids reached the tank they sank and were withdrawn as tailing. Floating concentrate passed over the lip. Tailing was re-treated in another tube.

At the MORNING MILL (*43 A 692*) 175 to 200 lb. of zinc concentrate assaying 48% zinc was floated per tube per 24 hr., representing a recovery as high as 85%. Three tons of solid per 24 hr. was passed through four tubes in series. The feed sized about 9% >40-m. and 11% <200-m. The feed pulp carried from 14 to 20% solids and was deslimed.

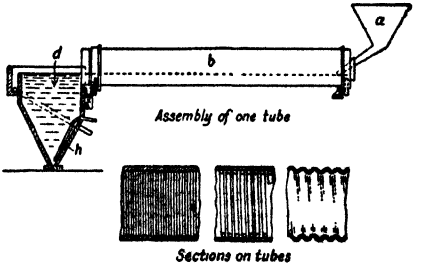

FIG. 12. Macquisten skin-flotation machine.

Size of particles that can be supported at lightly contaminated water surfaces is relatively enormous, as may be seen from Table 9.

Table 9. Flotation of dry, oiled sulphides at clean water surface (*CU*)

Mineral	Sp. gr.	Percentages of different sizes floating *a* (mm.)				
		3.3~2	2.4~1.6	1.6~1.2	1.2~0.83	0.83~0.59
Galena	7.5	.....	.....	6	77 to 85	100
Chalcocite	5.7	2	14	72 to 80	100	.....
Sphalerite	4.0	3	42	80 to 92	100	.....

a Mineral was oiled with oleic acid, applied in benzol solution, from which the benzol evaporated, leaving oleic acid as a film coating on the solid; particles were slid onto the surface from the dome of an inverted watch glass with one edge submerged.

Use. Skin flotation of ores is not practiced commercially at present (1943) except in a few small graphite mills, as previously mentioned, and as an incidental minor phenomenon in table flotation (Art. 30). A variety of methods is described in *Ed. 1, 783.*

FROTH FLOTATION

Froth flotation comprises two entirely different types of processes which resemble each other only in the fact that in both the concentrate is removed in the form of a froth or foam composed of gas, liquid, and a solid which is preponderantly one of the minerals or classes of minerals in the feed. In the early days the mineral that was floated had metallic luster, but greater knowledge of controlling conditions has now made it possible to float any kind of mineral. The processes differ fundamentally both in the place in which selection is effected and in the mechanism of selection itself. On the basis of the first difference the processes are classified as pulp-body type or as bubble-column type. On the basis of mechanism they are of contact type or precipitation type (see Table 8).

19. MECHANISM OF FROTH FLOTATION

Coursing-bubble slogan. In the early days of practice of froth flotation a plausible assertion was made to the effect that selection occurred at the surfaces of air bubbles coursing through the pulp, striking here a gangue particle, there a collector-coated particle, rejecting the former and adhering to the latter, and finally rising to the pulp surface, armored with selected solid, and gathering there to form a mineral-bearing froth. This idea, conceived in ignorance and born in litigation, was fostered by selfish interest and, unfortunately, was copied into some textbooks. It never had any technical utility, since design and operation based on its teachings are completely uncertain and inefficient. It was worth many thousands of dollars to its proponents as a slogan of litigation. It is slowly dying now that its commercial utility is over.

Error in the coursing bubble idea is made apparent by a few simple experiments and considerations. If a bubble is anchored in a conditioned pulp, deslimed to promote visibility, and the pulp is agitated so as to shower a stream of particles against the bubble, only an occasional collector-coated particle striking it adheres, and complete armoring of the bubble never occurs (*Ed. 1, 798*). The degree of adherence is greater the less vigorous the agitation. Yet when the same pulp is agitated violently, heavily armored bubbles form (see Art. 11).

If a pulp, properly conditioned for agitation-froth operation, is placed in an agitation-froth machine (Art. 27) and the agitator is run at low speed, finely divided air bubbles being introduced at the same time, so that the pulp is impregnated with small coursing bubbles, no effective froth is formed. Yet from the preceding experiment this is the agitation condition most favorable to effectuation of particle-bubble cling in an agitated pulp. Here again violent agitation will produce a good mineral-bearing froth. If, further, a barometric leg of clear water, held in an inverted burette, is placed with open end in a body of bubble-swept pulp in an operating pneumatic cell (Art. 20), some of the bubbles from the pulp enter the water column and rise therethrough above the level of the top of the bubble column in the cell. Here they can be observed to be substantially free of solid load, and such load as they carry is predominantly gangue slime. Finally, flotation recoveries can be made from pulps conditioned in such a way that if captive-bubble tests (Sec. 19, Art. 22) are made on particles of the mineral floated, after similar conditioning, considerable pressure and an induction period of many seconds are needed to effect bubble attachment.

The implication of these experiments is clear. It is not sufficient for the degree of bubble attachment necessary for effective flotation simply to cause bubbles to course around through a conditioned pulp. Such procedure cannot either impose the necessary pressure between bubble and particle to effect attachment nor can it maintain contact for the requisite induction period. The contact-angle tests prove that bubble-particle attachment can be effected by contact within the pulp body, but the other tests just as unmistakably prove that such attachment is not effected in operating machines.

Pulp-body froth flotation effects selection in the body of a conditioned pulp by causing gas bubbles to precipitate from solution in the liquid phase preferentially at the surfaces of collector-coated particles, and to cling to these particles. The particle surface thereupon becomes a part of the bubble surface, in contact with the air therein, and surrounded in the surface by the suspending liquid. Coalescence of such loaded bubbles, which observation of water containing operating quantities of frothing agent shows to occur rapidly and frequently, results in increased surface loading of the resultant bubble, due to surface-volume relationships. Thus armored bubbles and heavy laden bubble-mineral aggregates build up quickly. These are characteristic of this type of flotation. They are readily observable in operating machines having transparent walls. They can be caught and observed in the water-filled barometric leg described earlier in this article.

Precipitation contact is induced by HEATING, by CHEMICAL REACTION, and by PRESSURE REDUCTION, in fact by each and all of the known means of producing evolution of gas from a liquid.

Experimental verification of selective precipitation is simple. If particles collector-coated and the reverse (the kind of particle is unimportant) are placed in clean water in petri dishes and these are respectively heated, placed under a vacuum, or subjected to gas evolution by chemical means (*e.g.*, attacking $CaCO_3$ with H_2SO_4), bubbles precipitate selectively on the coated particles and adhere to them. Observation of the precipitation with a low-power glass, preferably of binocular type, makes it apparent that the attached bubbles were not migrating bubbles elsewhere formed, but that they formed in place. If a collector-coated particle is pushed or shaken into contact with a bubble held on another particle, adherence usually occurs, and, depending upon relative sizes of bubble and particle, the beginning of an armored bubble or of a heavy agglomerate is formed.

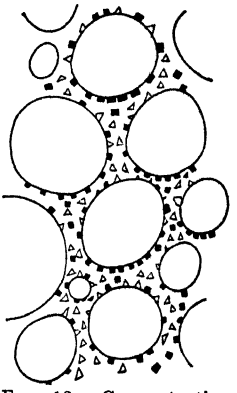

FIG. 13. Concentrating action in a bubble column.

Bubble-column flotation effects selection by gravitational contact presentation of pulp particles to the upper surfaces of a mass of rising bubbles (a BUBBLE COLUMN) which rests on a relatively quiet mass of pulp through which bubbles are continually rising. The bubbles rising through the body of pulp push pulp before them mechanically and lift it out of the body into the bubble column, where selection occurs.

Action in the bubble column may be seen to comprise behavior such as that diagrammed in Fig. 13. (Observation should be made through a transparent wall with a 10× glass, preferably of a pulp of dark valuable minerals and light gangue minerals, relatively coarse, say 48-m. maximum, and lightly deslimed. The observer should practice until he can distinguish individual grains readily.) All grains are falling relative to the bubble walls, streaming through the inter-bubble spaces. Both dark and light grains fall upon and slide along the upper surfaces of bubbles, but below the horizontal bubble equators only dark particles cling. Groups of dark particles collect at the lower poles of the bubbles, forming a pendent tip from which particles appear to string out and fall away. Gross observation of the column shows by color that the concentration of dark particles in the inter-bubble spaces increases from bottom to top of the column. This is readily confirmed by sampling (Fig. 14).

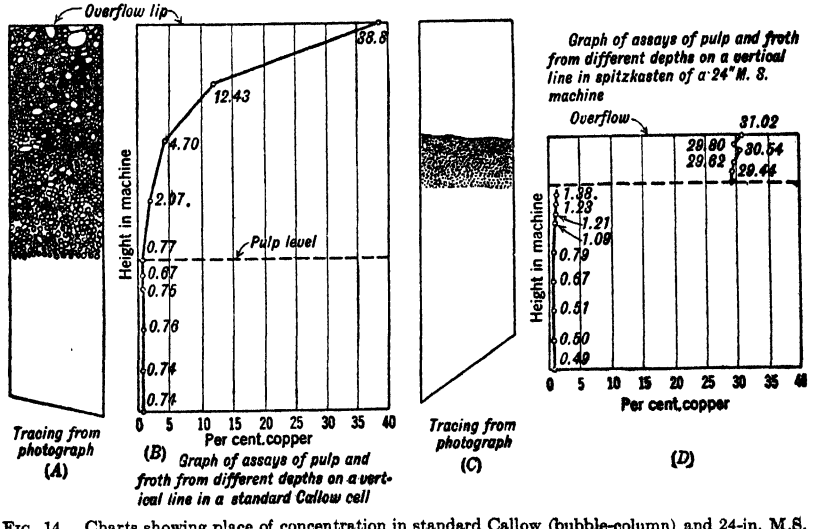

FIG. 14. Charts showing place of concentration in standard Callow (bubble-column) and 24-in. M.S. (agitation-froth) machines.

With all particles falling and the bubbles rising this change in concentration can only occur by reason of the fact that the average rising rate of bubbles lies between the average falling rates of the light and dark minerals.

Contact attachment in bubble columns is hard to understand in view of the difficulty of effecting it in a body of pulp. The conditions of presentation are little different from

those of the showered bubble described earlier in this article and do not approach the pressure and time-factor frequently necessary in contact-angle tests. All of the facts are consistent, however, with the hypothesis that the selecting surface in a bubble column is a liquid-liquid interface.

Contact angles of oil with collector-coated particles in water are about 160°, as against about 60° for air against the same surfaces. Ease and rapidity of attachment increase with increase in contact angles. Substantially all ores arriving at the flotation machines contain lubricating oils in quantities ranging from 0.05 to 0.25 lb. and upward per ton of ore, picked up in the mine and crushing plant. This oil is rendered highly surface-active by frothing agents and in such state spreads instantly at air-water interfaces. It concentrates rapidly in bubble columns because only a small part of the air-water interface entering the column as bubbles at the bottom overflows as froth, the remainder is lost by bubble coalescence in the column and bubble bursting at the top, and the oil and frothing-agent load of the lost surface is transferred to that remaining. Bubble columns do not start to operate immediately air is turned through a pulp, particularly in a cell in which pulp has not been standing. A considerable period is required to build the column up to overflow level, the period being greater with fresh water than with reclaimed, and greater with purified and with relatively soluble frothing agents such as amyl alcohol, terpineol, and pure cresylic acid than with those containing oily constituents (pine oil, commercial cresylic acid) and those of relatively low solubility, *e.g.*, the 8- to 10-carbon-atom alcohols, xylenol, etc.

Even with feeds free of oily matter other than air-borne contamination and with oil-free frothing agents, layers of saturated solutions of water-in-frothing-agent, similar to the layering of ether-water and phenol-water mixtures, apparently build up around the bubbles. This is indicated by the fact that while an unsaturated solution of water and amyl acetate is not colored by a small amount of the oil-soluble water-insoluble dye Sudan III, a bubble column formed therefrom is pink, which is the color of the dissolved dye.

Further, the ready dropping of attached mineral from bubbles in an operating bubble column, long before the push of the superincumbent load approaches that carried firmly by an armored bubble in a pulp-body-process froth, is consistent with the low surface tensions of the liquid-liquid interfaces involved (15 to 20 dynes per cm.) compared with the air-liquid tensions (60 to 65 dynes per cm.) in the same pulps (*87 A 285*). The formation of the pendent tip of mineral at the lower pole of the bubbles in an operating bubble column is never seen on bubbles carrying loads at the air-water interface, but can be simulated with captive oil droplets.

It would appear, then, that bubble-column flotation operates by and depends upon selection at liquid-liquid interfaces.

Bubble-column *vs.* pulp-body flotation. Quantitative experimental evidence of the difference between bubble-column and pulp-body flotation is presented in Fig. 14. A pneumatic bubble-column machine and the spitzkasten of a Minerals Separation standard machine were fitted with 1/8-in. sample pipes projecting inward 6 in. from the inner surface of the walls, arranged in vertical rows running from bottom to top of the respective apparatus. Simultaneous samples from all pipes were drawn from each machine, assayed, and the assays plotted against position in the machine. Plot *B* shows that bubbles on emergence into the bubble column in the pneumatic cell are carrying a load of pulp; that no concentration at the bubble surface has taken place in the pulp body. Plot *D* shows that the solid load on the bubbles emerging from the pulp in the agitation-froth process is a concentrate of substantially the grade of the finished concentrate from the cell.

The tests recorded in Fig. 14 were made in regular mill operation. In all, tests have been made in a 24-in. M.S. standard machine, a Janney mechanical machine, a standard Callow machine, two special large-size Callow machines, an Inspiration-type pneumatic machine, and a cascade machine. These tests all show that plots *B* and *D*, Fig. 14, are typical of the behavior of bubble-column and agitation-froth machines respectively. Laboratory observations, in which judgment was based on the color of the froth layers, have been made on Denver, Fagergren, and Ruth subaeration machines, a K and K machine, and a Forrester cell, all of which were of bubble-column types.

Pneumatic cell without pulp body. It logically follows from the conclusions reached in the preceding paragraph that the body of pulp in the bubble-column type of machine can be eliminated without affecting the concentration.

A cell built to eliminate the pulp body, 10 ft. long, 14 in. wide inside and 12 in. from blanket to overflow lip, with bottom horizontal (see Fig. 15), was run side by side with a regular mill cell in the Miami Copper Co. plant. This shallow cell recovered the same weight of copper per square foot of blanket area that was recovered in the standard cells adjacent, and made the same grade of concentrate.

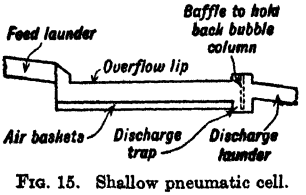

Fig. 15. Shallow pneumatic cell.

Gaudin (*F*), after analyzing the experimental evidence for and against the precipitation and contact hypotheses as applied to the agitation-froth machine, concludes for the latter on the score that fine-particle losses in this machine are much higher than coarse-particle losses, that this is explicable on account of the difficulty of effecting bubble contact with small particles but that gas precipitation should take place on them as readily as on the coarse. This is a persuasive argument. It is buttressed by the established fact that while the size at which recovery troubles start in undisputed contact processes such as the pneumatic is finer than in the agitation-froth process, the same difficulties are met therein. The argument would be stronger if it were established that the nature of the surfaces of fine valuable-mineral particles in tailing is the same as that of those in concentrate, which the available evidence contradicts. A much stronger *contra* argument would seem to be that while the other pulp-body

processes, which are undisputably of precipitation type, will not treat slimes at all, the agitation-froth process does. On the other hand, in the latter process, anything that is done to aid in the passage of gas through solution therein, such as heating the pulp or using more soluble gas than air, increases the speed of separation.

BUBBLE-COLUMN MACHINES

Bubble-column machines are practically the only ones in use in concentrating mills today (1943). They have almost completely displaced pulp-body machines over the period of 20 yr. past. They comprise a bewildering variety of forms, so different in outward appearance that their essential similarity is frequently overlooked. The three main classes are (1) pneumatic, (2) cascade, and (3) subaeration. They are characterized by the fact that all of the concentration is done in the bubble column. They use large volumes of air, of the order of 1,000 to 2,000 cu. ft. and upward per cu. ft. of solid floated. All operating machines consist of an open-top chamber through which pulp flows continuously, an external or an internal air pump, means to introduce air in the form of small bubbles at a point well below the surface of the pulp body, means to confine a bubble column above the pulp body, means to protect the bubble column from excessive shock and disturbance by the pulp, and separate ports or weirs for discharge of products.

PNEUMATIC MACHINES

Pneumatic machines are the simplest of the bubble-column types. They consist essentially of elongated open-topped boxes or deep troughs through which pulp flows from end to end and at or near the bottom of which air is introduced from an external pump or blower through pipes or some form of porous septum. The aim in air introduction is to have the bubbles that rise through the pulp under the bubble column as small and, within limits, as numerous as possible.

The first pneumatic machine to get into the mills was the sloping-bottom Callow cell (*54 A 14; Ed. 1, 809*) in which subdivision of the air supply was effected by introduction through a canvas blanket. The INSPIRATION cell and MIAMI-TYPE cells (*Ed. 1, 810*) were large-tonnage developments of this machine. The modern Callow cell is a flat-bottomed type, and the MacIntosh is the latest form of the porous-septum machines. The majority of pneumatic machines nowadays introduce the air through down-pointing pipes that are not subject to clogging and high back pressures to the extent that occurs in the porous-bottom machines. The Forrester was the first of this type to get into the mills. Modifications involve additionally some aeration by cascade action (Art. 22) in the forms described by Welsch (*U. S. pat. 1,253,653*/1918; *Ed. 1,823*) and Dunn (*U. S. pat. 1,219,089*/1917; *Ed. 1,823*). These are known variously as the Hunt-Dunn, Southwestern, Miami, etc., types. They are collectively known as air-lift machines.

20. BLANKET-TYPE PNEUMATIC MACHINES

Callow cell (Fig. 16) consists of an open trough *a*, 2 or 3 ft. wide, 6 to 60 ft. long, and 18 to 22 in. deep, with a feed box *b* from which pulp enters through a submerged slot, a

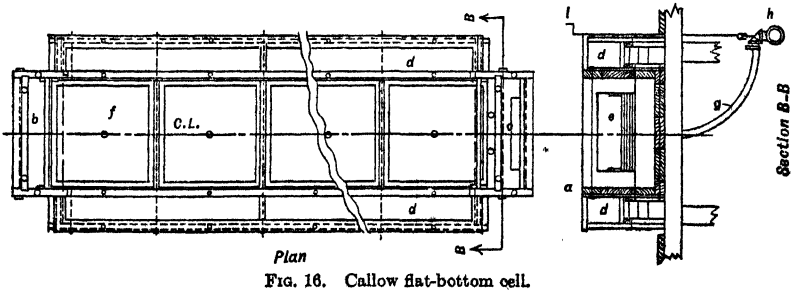

FIG. 16. Callow flat-bottom cell.

tailing-discharge box *c* into which pulp spills over an adjustable weir *e*, and froth-overflow launders *d* which slope both ways to a central discharge. Cast-iron air pans *f*, 3 ft. long by 2 or 3 ft. wide, are laid in the bottom of the trough and are supplied with air through

flexible rubber pipes *g* from a header *h* with a main supply-control valve and individual controls *i* for the separate pans.

Porous medium is canvas or rubber. For canvas covers No. 3 O.C. National Weave canvas is recommended by General Engineering Co.; this is practically a 3-ply canvas woven into one cloth. Rubber mats are pure-gum No. 2 sheeting, 5/64 or 3/32 in. thick, perforated with 0.038- or 0.045-in. punch respectively, 200 holes per sq. in. The punching makes a hole that is constricted somewhat at the center of the sheet. The holes are about 0.01-in. diameter and the blankets pass about as much air at 1-lb. pressure as canvas blankets pass at 4-lb. (*IC 6358*). The mat is bolted tightly under peripheral metal strips to the top of the air box, and is kept from bulging by longitudinal strips. The cell is made single or double, and is rated by the width and number of pans, *e.g.*, 3-ft. 8-pan, or by width and length of trough, *e.g.*, 3×24-ft. Cells longer than 8-pan are usually divided transversely by a weir as shown in Fig. 17.

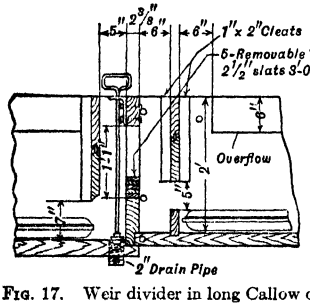

FIG. 17. Weir divider in long Callow cells.

Capacity may be calculated from the required time-factor (p. 57), allowing for a 6- to 8-in. bubble column in rougher service and 8- to 10-in. in cleaners.

Performances reported for roughers range from 0.1 to 0.8 ton per sq. ft. of blanket area per hr. AIR CONSUMPTION in roughing service ranges from about 7 to 15 cu. ft. of free air per min. per sq. ft. of blanket and averages close to 9 cu. ft.; in cleaners it is about half this. PRESSURE DROP through new wet blanket is about 1.5 lb. per sq. in. and through rubber sheet about 50 to 75% of this. Blinding by sand and slime cemented by carbonates will raise the pressure drop with blankets to as much as 3 times the initial figure; the rise with rubber is not as great. The pulp imposes additional pressure, dependent on its specific gravity and depth. POWER CONSUMPTION depends, of course, upon the blanket area per daily ton and the total back pressure. Production of low-pressure air in Roots-type blowers may be estimated at 155 cu. ft. of free air per min. to 1-lb. pressure per hp.; and within normal operating pressure ranges, power consumption is proportional to back pressure. These figures correspond to 0.5 to 3 hp-hr. per ton.

Table 10. Recoveries in successive compartments of a four-compartment pneumatic cell at Miami Copper Co. (1921)

Material	Mar. 14	Mar. 18	Mar. 26	Apr. 4	Average	Recovery, cumulative %
Feed, per cent. Cu *a*	1.90	1.50	1.39	1.55	1.58	.....
Tailing, % Cu: *a*.						
Compartment 1	0.39	0.30	0.26	0.34	0.32	79.9
Compartment 2	0.17	0.14	0.12	0.20	0.16	90.5
Compartment 3	0.14	0.07	0.10	0.16	0.12	93.3
Compartment 4	0.12	0.08	0.11	0.13	0.11	93.2
Total *b*	0.16	0.15	0.16	0.17	0.16	.....
Concentrate, combined	25.72	33.41	24.59	29.44	28.29	.....
Tons per 24 hr	.....	.....	.....	.....	123	.....

a As sulphide.
b Automatic sample. Compartment samples were cut by hand under considerable difficulty.

Most of the recovery in a pneumatic machine is effected in the first few feet. Table 10 shows results of a test on a Miami-type cell. In one test on a standard Callow cell in the Miami mill over 80% of the total recovery was made in the first 16 in. of length.

Table 11 shows assays of individual concentrates from the various compartments of a Miami-type cell. This is typical of the multi-compartment cells and also of discharges from corresponding positions along the side of the standard Callow and other trough-type machines.

Table 11. Assays of concentrate from different compartments of a 4-compartment pneumatic cell at Miami Copper Co.

Compartment No.	Assays, % Cu		
	May 1920	Oct. 1920	Feb. 1921
1	34.48	37.20	35.96
2	18.90	11.60	20.47
3	11.77	4.90	11.87
4	11.01	4.30	9.35
Total	27.21	23.55	23.00

Proportions of mat-type cells have varied gradually from the original Callow, 2 × 8 ft. in plan, 18 in. deep at the head end, and a bottom slope of 3 in. per ft., through a number of forms of increasing length and gradually decreasing bottom slope, which were compartmented by transverse weirs in order to maintain a pulp level, to the final long, narrow, shallow, uncompartmented form with little or no bottom slope. This development has been accom-

panied by a progressive improvement in metallurgical results, power and maintenance costs, ease of operation, and capacity.

The latest form at RAY comprises 2 1/2×15-ft. flat-bottom units; 8 of these in series, 2 acting as roughers and 6 as scavengers, treat 2,000 tons per 24 hr. In a test against matless cells they were sufficiently superior in metallurgical performance to justify retention despite higher operating costs (*IC 6241*).

Maintenance in blanket-type cells tends to be high on account of clogging of blankets and the harshness of the methods used to relieve it. At the best these involve emptying the cell and scrubbing with a wire brush, frequently with hydrochloric acid; at the worst the blankets are pounded with the end of a 2-by-4 until, usually, it penetrates.

Life of 4-ply 18-oz. quilted blankets in normal service is 60 to 180 days. At NEVADA CONSOLIDATED (*A TP 6*) it averaged 150 days with a minimum of 2 or 3 days. At OLD DOMINION, using lime, the blankets required an acid bath every 4 days and had an average life of 16 days; by this time pressure had risen to 6 or 7 lb. per sq. in. (*IC 6792*).

Hearing cell is an air-pan cell comprising a V-shaped box averaging 42 in. wide at the top, 14 in. at the bottom, with mean depth to overflow of 36 in. Bottom slopes 1/2 in. per ft. Length is a multiple of 24-in. air pans. Cell is provided with a weir discharge.

Three @ 5-pan cells in series are used at BUNKER HILL & SULLIVAN for each cleaning circuit. Each machine takes 250 cu. ft. of air per min. at 4-lb. pressure. The lead section treats 6 tons per hr., the zinc 4 tons in pulps containing 10, 8, and 6% solids respectively in successive machines.

MacIntosh cell (Fig. 18) has the porous medium wrapped around a rotating perforated pipe *a* mounted near the bottom of a V-shaped trough. The rotor *a* constitutes an air

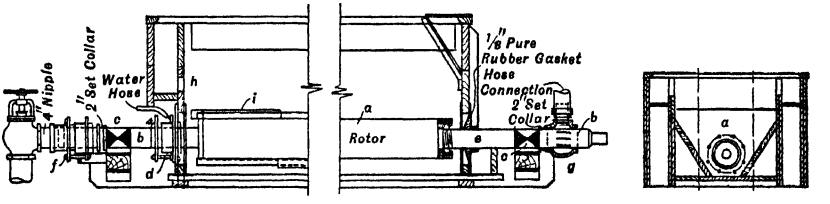

FIG. 18. MacIntosh cell.

chamber which is mounted on axial hollow shafts *b*, carried on bearings *c*. The shafts are usually carried through the feed end in a water-packed gland *d* mounted on rubber, and through the discharge end by means of a so-called gland eliminator *e*, comprising a soft-rubber gasket carried on the end wall and lapping against a cone-shaped collar on the shaft Leak through the gland eliminator, amounting to about 1 qt. per min., is routed into the tailing. The gland eliminator may be used on head end also, but then provision must be made to return leak to the feed stream, or some place of corresponding assay. Air is supplied at one or both ends, as desired; with two-end supply a transverse diaphragm is inserted in the rotor. Supply is either through a gland *f* or a rotating valve *g*. The rotor is driven at 15 to 20 r.p.m. by pulley, sprocket, or geared individual motor, as desired. Feed enters at *h* and leaves through a slot near the bottom at the opposite end, discharging into a box in which level is maintained as desired by a weir overflow. Rotors are covered with canvas socks or with perforated rubber, the materials being the same as recommended for Callow cells, *q.v.*; choice is on the same bases as for the Callow cell, except that the rubber is somewhat more difficult to mount than the canvas. Longitudinal scrapers *i* are carried at 180° and staggered lengthwise to prevent packing under the rotor.

Sizes range from 10-in. (wide) × 4-ft. tank with 4-in. rotor to 48-in. × 30-ft. tank with 2 parallel 9-in. rotors. Depth is such as to have the top of the rotor about 18 in. below the overflow lip.

AIR PRESSURE required averages about 2 lb. per sq. in. for rubber and 3 to 3.5 lb. for canvas. AIR CONSUMPTION in roughing service is from 3.5 to 7 cu. ft. of free air per min. per sq. ft. of rotor surface, or 10 to 20 cu. ft. per ft. of cell length. Power consumption per cell for air may be estimated as for Callow cells; add 0.4 to 0.5 hp. for turning the rotor. Capacity and power consumption per ton of ore must be estimated from time-factor. Bubble columns should be estimated of the same depth as in Callow cells, *q.v.* AERATION is definitely more efficient in the MacIntosh than in the Callow machine, owing to the fact that the blanket is kept substantially free of settled solid and sands are kept in suspension better, hence time-factors are lower. For rough estimating the makers state that roughing capacity ranges from 4 tons per 24 hr. per lineal ft. of rotor for a slow-floating ore to 16 tons for a fast-floating ore. At NORANDA the primary (copper-section) roughers treat 0.5 ton per ft. of length per hr. and the secondary

(pyrite) and tertiary (pyrrhotite) machines treat 0.4 ton. PERFORMANCE FIGURES range from 0.75 to 2.5 hp-hr. per ton, including roughing and cleaning. Rose and Cramer (*IC 6358*) reported that the change-over from Callow to MacIntosh cells at NACOZARI resulted in a reduction in cell power consumption from 3.75 to 0.55 kw-hr. per ton, and that 6 @ 10-ft. roughers plus 4 cleaners treated 1,000 t.p.d. McLachlan (*N. Y. meeting AIME, 1928*) reported use of a MacIntosh cell as a unit cell at NACOZARI, taking <3/8-in. primary rod-mill discharge. At VERDE CENTRAL (*IC 6489*) 3-ply blankets lasted 30 to 40 days, scrubbed every 5 days.

21. AIR-LIFT MACHINES (MATLESS CELLS)

These apparatus are so named because in the process of dispersion of air through the pulp they employ the mechanism of the air lift (Sec. 18, Art. 21), and porous media are eliminated. This principle of aeration was disclosed in a number of early flotation patents but was first built in practical form by Forrester. With his lead a number of the older names have been resurrected and applied to modifications.

Forrester cell (transverse section, Fig. 19) consists of a V-shaped trough, long in proportion to its width and depth, bottom horizontal, through which pulp to be treated is flowed from end to end. Inclined baffles *7*, spaced about 6 in. apart at the top, and vertical baffles *3*, perforated along their lower edges with round holes or slots *9*, extend from end wall to end wall. Air is introduced through 1/2- to 1-in. pipes *6* depending from header *2* to within about 6 in. of the bottom and spaced at 4- to 6-in. intervals along the length of the cell. With heavy feeds, as at BRITANNIA, 1/2-in. pipes spaced 3 in. are used in the first 20 ft. of cell. Supply for the whole cell is regulated by valve *1*, or separate regulation for sections may be arranged. Members *4* are splash boards. Feed enters through a bottom slot from a penstock at the head end, and tailing discharges over a regulable weir. Height of froth overflow is adjustable in some forms. The machine is made of either wood or steel. It may be divided by transverse partitions.

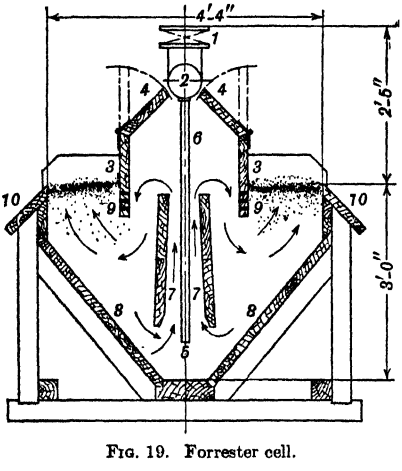

FIG. 19. Forrester cell.

Air entering the pulp at *5* rises in the space between baffles *7*, mixing with the pulp therein and lowering the bulk density of the material in this zone below that of the material outside the baffles. As a result it is displaced upward by difference in hydrostatic pressure with sufficient momentum to be thrown upward into the space between baffles *3*. It splashes back into the pulp between *7* and *3*, which is maintained at a level lower than the top of *7*.

Considerable agitation occurs in the air-lift zone (between baffles *7*), and more occurs in the splashing zone (between *7* and *9*). As a result air introduced at *5* and additional air introduced by the falling pulp masses in the splashing zone is dispersed throughout the pulp flowing away from the splashing zone and rises between *3* and the side walls, pushing up pulp to form a bubble column.

Pulp follows a path that is roughly a double spiral with horizontal axes, being circulated round and round the baffles *7* by the air-lift action and forced lengthwise of the cell by the head of the entering stream. It is thus presented many times, more or less aerated, at the bottom of the bubble column, with repeated opportunities to be carried up into the column for concentration. The effective air-swept volume of the machine is dependent upon the design and operation of the air lift and upon the depth of the baffles *3* and the area of perforations *9*. The desideratum from the standpoint of introduction of pulp into the bubble column is to decrease downward momentum of solid particles leaving the splashing zone and yet to get as much entrained air as possible from the splashing zone out under the bubble column. On the other hand the bubble column must be protected against the agitation of the splashing zone. The greater the agitation in the air-lift and splashing zones the finer is the dispersion of air and the greater the quantity carried out under the bubble column. Perforations *9* permit some aerated pulp that would otherwise become deaerated to feed more directly into the bubble column. This serves to build up a head of froth along *3* which produces a more rapid flow of froth toward overflow *10*. The elements of control are apparent from this analysis of the cell action.

Size of transverse section is normally close to that shown in Fig. 19, which has a nominal cross-section of 8 sq. ft.; length ranges from 3 to 100 ft. ROUGHING TIME is usually between 5 and 10 min. in pulps that contain 20 to 30% solids for low-sulphide ores, and 30 to 45% solids for high-sulphide ores. Contact times as high as 30 min. are reported. Southwestern Engineering Co. gives 6 to 30 tons per 24 hr. per ft. of length as a basis for estimate of ROUGHING CAPACITY. CLEANING TIMES are usually 2 to 3 times the roughing time in pulps of about half the solid content, but in differential cleaning of bulk concentrates the pulps are usually of higher solid content than in the rougher cell and the time is about the same or even shorter. MAXIMUM FEED SIZE at 20 mills reporting was a fraction on 35-m. AIR CONSUMPTION ranged from 45 c.f.m. per ft. of length for a fine-ground low-sulphide ore to 100 c.f.m. for a coarse heavy-sulphide ore and averaged about 75 c.f.m. Variation in air consumption with width is roughly plus or minus 10% per ft. of width either way from 4 ft. Consumption in cleaning cells is normally about 75% of that in roughers, but with heavy sulphides it may be 200%. At MATAHAMBRE (*IC 6544*) consumption was 43 c.f.m. per ft. of total cell length (roughers and cleaners). Power consumption may be estimated at 1 to 2 hp-hr. per ton for roughing and at 1.5 to 4 hp-hr. per ton total for 1-mineral separations; it will run up to 8 hp-hr. per ton for complicated differential treatment. The manufacturer estimates 0.6 to 1 motor hp. per ft. of length of a rougher cell 4 ft. wide, corresponding to blower efficiencies of 80 and 63% respectively, and 0.4 to 0.7 hp. per ft. for cleaners. Except in the largest mills, one attendant cares for all of the flotation. Maintenance is substantially nil. At NEVADA CONSOLIDATED (*A TP 6*) the saving in maintenance over Callow cells was 1.41¢ per ton, with a saving in power of 1.44¢ per ton (2.6 kw-hr.) due to a reduction in blower pressure from 5 1/2 lb. to 1 1/2 lb. Table 12 gives performance data on a variety of ores.

Modifications of Forrester Machines

Hunt (or Hunt-Dunn) cell differs from the standard Forrester cell in that the air lift is carried higher relative to

Table 12. Performances of Southwestern machines (*Southwestern Eng. Co., PC*)

Company	Old Dominion	Copper Queen	Britannia M. & S.	Chino Copper	Golconda	Allenby	Miami	Black Hawk	Royal	Christmas Copper
Character of ore	Chalcopyrite	Chalcocite	Chalcopyrite and pyrite	Chalcocite	Lead-zinc	Chalcopyrite	Chalcopyrite	Copper-lead-zinc	Gold after amalgamation	Chalcopyrite
Tons feed per 24 hr.	1,400	6,000	7,500	11,100	250	2,500	18,000	175	80	500
Size of feed	15 to 20% >100-m.	10 to 12% >65-m.	.....	15 to 20% >100-m.	1% >65-m.	2% >100-m.	10% >65-m.	2% >65-m.	2% >28-m.	.....
Solids, %	25	20	.....	22	25	25	32	32	16	30
Total flot. machines, ft. length	162	600	935	720	80	576	880	68	8	60
Tons per 24 hr. per ft. of rougher cells	.....	14	Cu 27.2 pyrite 37.5	17.1	Pb 8.9 Zn 8.6	6.7	30	Pb 14.6 Zn 7.3 Cu 14	*a*	12.5
Tons per 24 hr. per ft. total machine	8.7	10	Cu 11.7 pyrite 25.4	15.4	Pb 6.2 Zn 6.0	4.3	20.5	Pb 8.7 Zn 4.0 Cu 8.0	10	8.25
Air pressure, lb. per sq. in.	1.5	1.5	1.6	1.9	1.7	1.6	1.6	1.2	1.5	1.6
Cu. ft. of air per min. per ton original feed	6.7	.....	6.5	6.6	28.0	16.5	4.0	36.0	9.0	10.0
Cu. ft. of air per min. per ft. of machine	65	65	53	101	88	71	82	92	90	82.5
Kw-hr. per ton new feed	1.64	1.25	1.2	1.29	4.0	2.93	.60	6.1	1.7	1.8
Cross-sectional area of machine, sq. ft.	8	8	8	10	7.0	10	11	7.0	7.0	10
Time-factor, min.	9.6	8.2	.....	7	.....	20	5.0	.....	5.0*b*	13.5

a Roughing and cleaning in single unit, after amalgamation. *b* Estimated.

the pulp level, a deflector above the lift concentrates and directs the plunging stream downward, thus increasing the cascade action, the baffle plates protecting the bubble column extend relatively deeper into the pulp, and they are not perforated.

At MUFULIRA the Hunt machine has been modified as shown in Fig. 20, by moving out the baffles protecting the bubble column to the varying extents indicated by X, thus crowding the bubble column, and

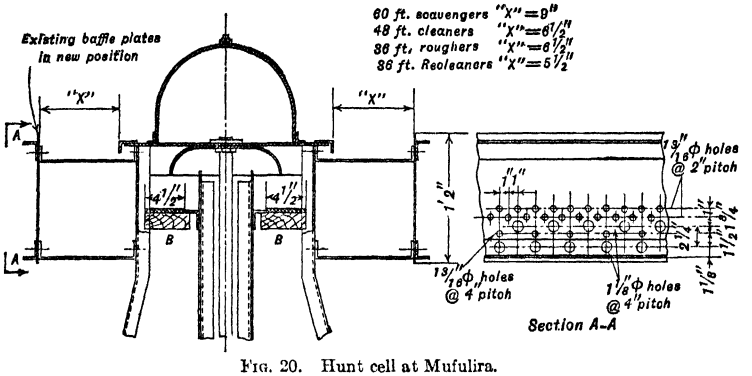

FIG. 20. Hunt cell at Mufulira.

installing splash boards *B* to divert the cascade near to the back of the baffles in their new positions. See also Sec. 2, Fig. 38.

CAPACITY of 62-ft. rougher cells at AJO (*134 A 445*) is 2,000 tons per day at 20 to 25% solids, making a 16 to 25 : 1 ratio of concentration: a 12-ft. cell cleaning this concentrate treats 80 to 125 tons per 24 hr.

Steffanson cell is a modification of the Hunt cell having a perforated deflecting cap. The result of this variation in structure is to cause a finer dispersion of bubbles under and in the bubble column.

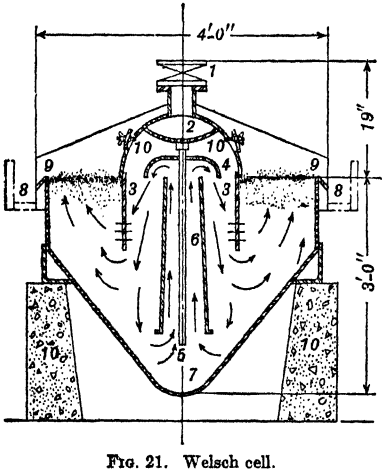

FIG. 21. Welsch cell.

Welsch cell (Fig. 21) is designed to permit depression of the pulp in the splash zone by building up pressure thereon. The extent of depression can be regulated by the air gates, *10*.

St. Joe cell is a special narrow and relatively deeper cell with 4-in. downcomers fishtailed to 1/4-in. slots. As a result back pressure is reduced to 0.75 to 1 lb. At BALMAT the lead roughers treat 11.5 tons per ft. per 24 hr. and the zinc and iron roughers 7 tons. Installed power is 2.4 hp-hr. per ton for the lead machines and 2.8 each for the zinc and iron.

At the Flat River mills of ST. JOSEPH LEAD CO. (*IC 6658*) the cells are 37 in. wide and carry an 18- to 21-in. pulp level and 24- to 39-in. depth to froth overflow, increasing with the grade of concentrate desired. Lengths are 36 ft. for roughers, 12 to 42 ft. for cleaners and recleaners. Air consumption is 100 to 150 c.f.m. per ft. of length at 12 to 16 oz. pressure.

Emery (*U. S. pat. 2,202,484*) describes an apparatus (Fig. 22) in which the side of the trough is pinched in at the top as at *a* and the splash baffle *b* is oppositely flared at the bottom and so placed as to give a narrow doubly crowded bubble column, which accelerates overflow for sluggish froths. The air lift is a continuous narrow box *c* with a plurality of short pipes *d* at the bottom, which makes for easy removal of this unit and good dispersion of air.

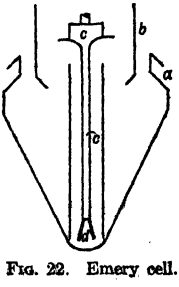

FIG. 22. Emery cell.

Shimmin cell at SUNSHINE (*136 J 269*) is of air-lift type with overflow on one side only; it is about 1 ft. wider (5 ft. 4 in.) and somewhat deeper (3 ft. 8 in.) than the standard form.

Deep air cell (*Bul 31[2] CIMM 479*) is a modification of the Forrester cell, differing principally in that the depth is 7.5 to 10 ft. and width is made somewhat greater. A 5×8×100-ft. cell at Britannia replaced more than 500 ft. of standard Forrester cells treating 5,500 to 6,200 tons dry feed per day. Comparative operating data for deep-cell *vs.* a 4×3(deep)×100-ft. Forrester in roughing service, stating deep-cell figures first, are: air pressure at header, 3.9 to 4.1 *vs.* 1.9 to 2.0 lb. per sq. in.; c.f.m. free air per lineal ft., 60 *vs.* 75; daily ea-

pacity, 6,000 tons *vs.* 1,000 at 26 to 29% solids; power input, hp., 180 *vs.* 95; power consumed per ton of ore, hp-hr., 0.72 *vs.* 2.28; tailing assay, % Cu, 0.06 *vs.* 0.045. About 80% of total recovery is made in the first 30 ft. of cell. A machine built of 3-in. and 2 1/2-in. plank, with 12-in. header and 3/4-in. drop pipes at 2 1/2-in. centers for 20 ft. and 3-in. for balance cost $2,600 (1937). Tie-rods and drop pipes are covered with rubber hose. Pinched rubber sleeves (Goodyear Tire and Rubber Co.) are used on the lower ends of the drop pipes to prevent clogging in case of unexpected shutdown. See also Sec. 2, Fig. 38.

In substituting deep cells for shallow, length should not be diminished, but rather the substitution should be on a time-factor basis in the air-swept zone, with the length held constant.

Air-lift *vs.* agitation-froth machines was subjected to thorough testing at BRITANNIA (*Bul 244 CIMM 323*). A summary of the findings was: Pine oil consumption was 0.13 lb. per ton of feed in the air-lift *vs.* 0.23 in the M.S. machine; the air-lift took 28% less power, amounting to 0.8 hp-hr. per ton of feed; maintenance was substantially nil for the air-lift *vs.* 0.3¢ per ton for the M.S.; the air-lift required less attendance, less floor space, made better recovery and a higher grade of concentrate (+1.5% Cu).

The significance of this latter ability is made apparent from a competitive test at MIAMI in which the matless cell made a concentrate containing 15.2% Cu and 33.6% Fe as against 13.3% Cu and 34.3% Fe in the competing machine; recoveries were 91.1 and 91.7% respectively, *i.e.*, against the matless cell. Yet the net profit after smelting, on the basis of a 5-mo. test, was 5.6¢ per ton of flotation feed in favor of the matless cell.

At UTAH (*IC 6792*) power consumption for 1930 was 4.9 kw-hr. per ton in Janney mechanical-air machines and 1.8 kw-hr. per ton in an Inspiration cell. In the same year the minima and maxima for copper flotation as collected by the U. S. Bureau of Mines (*ibid.*) were 2.1 to 4.9 kw-hr. per ton for mechanical machines and 0.8 to 6.6 for pneumatic.

It must be borne in mind, however, that heavy quick-settling pulps may require such excessive aeration in pneumatic cells as to make it difficult to maintain a smoothly working froth, so that tailing and power consumption may both be high in comparison with mechanical machines.

Air-lift *vs.* mat-type cells. The essential factors in this choice are size and character of ore. If the ore is a heavy sulphide or coarsely ground and hard to suspend, or if sulphide is to be depressed in the operation, both power and maintenance in the mat-type cell will be so much more costly than in the air-lift machine that even a competitive run is unjustified so far as a stationary-mat machine is concerned, and the result of a test against a rotating mat is almost a certainty in favor of the air-lift. But with fine grinding, a low-grade ore, and little or no sulphide depressed, the mat-type cell will tend to give sufficiently better metallurgical results to overcome any advantage of the air-lift in lower power consumption and maintenance.

At INTERNATIONAL NICKEL it is reported (*130 J 465*) that the power consumptions per ton of ore were 2.2 kw-hr. for stationary mats, 1.3 for rotating mats, 1.8 for matless cells.

Competitive tests. It is worthy of note at this point that the reported results of competitive tests are always to be scrutinized critically, and frequently skeptically when the report is in favor of the home team. Usually the prevailing operation has been built up over a period of years to favor every idiosyncrasy of the installed apparatus. The newcomer must not be damned because it cannot compete in absolute parallel. Time, place, nature and extent of conditioning may need change in order to attain optimum conditions for the new cell; this requires time, intelligence, and a sympathetic attitude.

22. CASCADE MACHINES

Cascade machines effect aeration by causing a stream of water or pulp to plunge into a body of pulp. Air is entrained by pushing it into the body of pulp ahead of the masses or droplets into which the entering stream is broken. Any stream of pulp that falls through a distance greater than a few times its diameter breaks up into distinct masses, the breaking being greater the greater the velocity of the stream and the further its free fall. Each mass of entering pulp, if moving at sufficiently high velocity, introduces a small volume of air in substantially the same way as an air bubble is pushed into water by a pebble thrown therein. The air thus introduced is broken up into smaller bubbles by reason of the swirl and movement caused by the entering stream and, rising to the surface of the pulp, forms thereon a bubble column in which concentration takes place as previously described. The efficiency of the operation depends on the effectiveness of the apparatus in forming and maintaining an undisturbed, highly aerated bubble column.

A form of cascade machine that was installed at CENTRAL MINE, Broken Hill, Australia, is shown in Fig. 23. It consisted of a battery of boxes *a*, *a'*, etc., placed in vertical relationship to each other as shown, with provision for pulp flow through the series by means of down-pipes *b* and overflow pipes *c*.

Froth overflowed lips *d* into launders *e*. Aeration was effected in the top box by the plunge of the feed stream from feed launder *f* into the body of pulp standing in box *a* at a level determined by the setting of weir *g* operated by lever *h*. The aerating stream to subsequent boxes was confined by the down-pipes *b*, after emerging from the nozzle *i*. Detail of the nozzle is shown in Fig. 24. Crowding boards *j* served to increase the depth of the bubble column and to prevent overflow of froth into pipes *c*. Downward projection of the pipes *b* below the upper surface of the bubble column protected the latter from being broken down by spray from the falling stream.

Nozzle (Fig. 24) comprised the downwardly converging cast-iron pipe *k*, bushed with the hardened-steel wearing bushing *l*. Clamp *m*

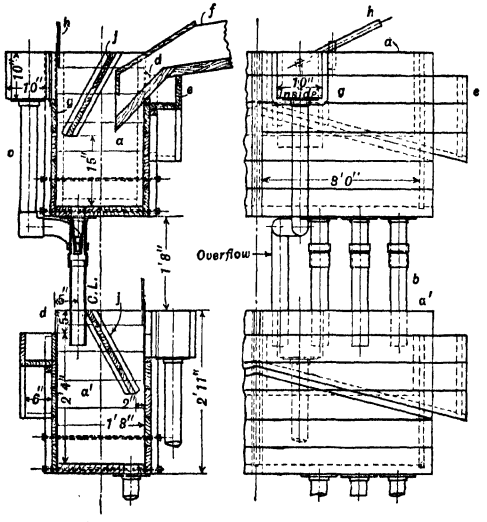

FIG. 23. Cascade boxes at Central Mill.

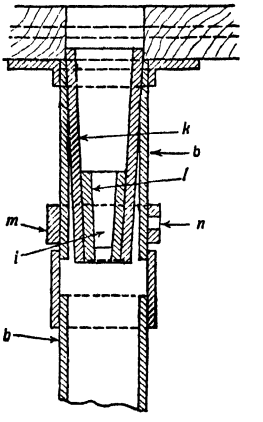

FIG. 24. Aerating nozzle for cascade machine.

had threaded hole *n* for a 1/2-in. petcock, and registered above a hole drilled in *b* to admit air into the space around the stream emerging from the nozzle. The petcock permitted regulation of the quantity of air admitted to the pulp in the lower box. Tests at MIAMI demonstrated that this regulation was unnecessary, and that the only function of the downward extension of pipe *b* below the nozzle was to protect the bubble column in the lower box from spray. A similar machine was used for roughing at PHOSPHATE RECOVERY No. 2 plant, but was not satisfactory and was replaced by subaeration machines in later plants (*118 A 474*). Details of a machine at PREMIER are given in *IC 6742*.

Use. Cascade machines have been used very little in the mills. Recoveries are low except with ores that float easily. Capacity per unit of volume is low and the height required makes for expensive installation. Control of aeration is difficult and unsatisfactory. Such little use as the machines have had was in skimming off a high-grade concentrate ahead of the main roughers, or as scavengers, in both cases the prerequisite being headroom to waste or cheap power for elevation.

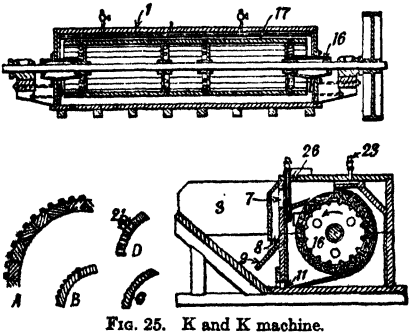

FIG. 25. K and K machine.

Mechanical cascade machines are those in which the pulp to be splashed is elevated by the machine. Of these the Kraut and Kohlberg (K AND K) and the Kraut machines are the only ones that have had more than local use.

K and K machine (Fig. 25) consists of a slotted cylinder *16*, 20 to 30 in. diam. and 10 to 16 ft. long, mounted horizontally so as to be driven (counterclockwise in the view shown) at 160 to 200 r.p.m. It is enclosed in a boxlike housing which opens full length at *7* into hood *8*, which discharges below the surface of pulp in spitzkasten *8*. Rotation of the cylinder carries pulp in the interslot openings to the top of the box and splashes it through *7* and *8* into the body of pulp in the spitzkasten, thus aerating the latter. Baffle *9* prevents aerated pulp from short-circuiting through *11* so that the

air bubbles rise in *8* and form a bubble column on the pulp therein. Froth overflows the lip along the front of the spitzkasten; pulp circulates back through *11*, thus following a spiral path around the partition from a feed point at one end of the spitzkasten to a tailing discharge at the other. CAPACITY is rated at 30 to 100 tons per 24 hr.

Butchart machine has the same type of rotor as the K and K, but it is fitted with toothed spiders between the teeth of which hardwood slats are keyed with hardwood keys. The spitzkasten is divided transversely into compartments about 30 in. long, and gates control the amount of recirculation of pulp to the corresponding section of the rotor before it passes on to the next compartment. An adjustable submersion baffle is also provided in each compartment. At EAGLE PICHER, Ruby mill (*IC 6497*), the coarse feed to the Butchart cells wore the rotors excessively, *e.g.*, life was only 10,000 and 7,100 tons in primary (slime-bearing) and secondary pulps respectively; replacement costs were 0.5 and 0.7¢ per ton.

Owen and Dalton machine at MORNING mill (*IC 6587*) is a K and K-type machine 60 ft. long, 6-compartment, with 2 @ 36-in. rotors per compartment, driven at 80 r.p.m. Slats are spaced 2 in. Capacity is 150 t.p.d. for a 60-ft. lead rougher; power consumption, 9 hp-hr. per ton for roughing and cleaning.

Kraut machine (Fig. 26) utilizes a vertical spiral pump *a* placed in a rectangular tank to elevate pulp, which is discharged into hood *b*, internally baffled to reduce swirl, and forced to flow out under the edges thereof. The splash in the hood, which has an air-inlet entry through the hollow pump shaft, aerates the pulp, and the bubble column which forms outside is protected by the hood. Pulp flows generally from one end of the cell to the other, with confused and undirected circulation on the way. The complete machine comprises 2-, 3-, and 4-cell multiples. Cell SIZES are approximately 30, 36, and 48 in. square; corresponding cell capacities are 7.5, 14, and 26 cu. ft.; maker's CAPACITY ratings, 2 tons per 24 hr. per cu. ft.; SPEEDS, 1,100, 925, and 825 r.p.m. respectively with estimated POWER CONSUMPTIONS, 1.2, 4, and 6 hp.

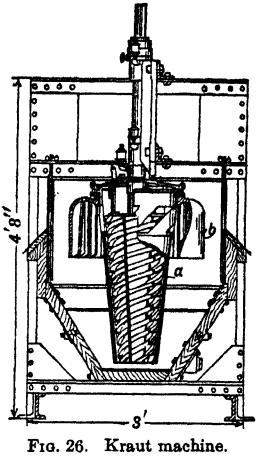

FIG. 26. Kraut machine.

The battery of six Kraut cells cleaning pyritic gold concentrate at IDAHO-MARYLAND (Sec. 2, Fig. 64) treats 5 tons feed per hr. at a reported power consumption of 7 1/2 hp. per cell. At LAKE SHORE 70 rougher and 16 cleaner cells treat 2,500 t.p.d. with a consumption of 2 hp-hr. per ton; at CUSI MEXICANA 20 lead roughers and 4 lead cleaners, 20 zinc roughers and 6 zinc cleaners treat 600 t.p.d. with a consumption of 5 hp-hr. per ton; at MURCHIE MINING CO. 12 roughers and 2 cleaners are fed 300 t.p.d. and consume 2.8 hp-hr. per ton; at BEEBE MINE 10 roughers receive 30 t.p.d. and draw 2 hp-hr. per ton (M. Kraut, *PC*).

23. SUBAERATION MACHINES

Introduction. The machines grouped under this class name differ widely in design and operation. Their common structural features are: an open-topped box for containing pulp, a rotary agitator at the bottom of the box, means to supply external air directly to the agitator, means to confine agitation of the pulp to a zone directly around the agitator, particularly to reduce swirl or surging at the top of the pulp, a froth-overflow lip at the top of the box, and feed and discharge ports for pulp. Their common operative characteristic is that separation of concentrate from tailing is made in the column of bubbles maintained above the pulp in the box. They are readily divisible into two groups, distinguished by the manner of introduction of air. In one group the impeller acts as a centrifugal air pump submerged in the pulp, with its suction pipe, usually a hollow impeller shaft or a pipe surrounding the impeller shaft, passing from the surface of the pulp to the impeller zone. In the other class air is pumped in to a point directly under the impeller by an external pump; this arrangement, incidentally, gives an additional operating control.

Differences in type of impeller and in operating speeds introduce a difference in flotation mechanism. Low-speed machines and those with double-shrouded impellers are pure bubble-column apparatus, the impeller serving simply as a device for dispersing air bubbles and distributing them under the mass of semiquiescent pulp above the impeller zone. High-speed machines with impellers that minimize mass cavitation effect more or less precipitation selection in the impeller zone, which aids carriage of floatable mineral to the bubble column. After this selected mineral arrives at the base of the bubble column, however, it merges into the other mineral therein, and selection is effected by pure bubble-column action. This merger is effected because of the fact that when surface-active material in an amount sufficient to form a separate liquid phase is brought to the surface of a bubble carrying solid in the gas-liquid interface, the surface-active material intrudes

itself into the air-liquid interface and displaces the attached solid into the liquid-liquid interface.

Machines with Internal (Submerged) Air Pumps

Denver Sub-A (Fahrenwald) machine (Fig. 27) consists of a series of substantially identical cells *a* set side by side on the same level, with party side walls and continuous front and rear walls, comprising a compartmented open-top box longitudinally, above which a frame *c* for support of a driving mechanism is placed. Impellers *d*, one to a box,

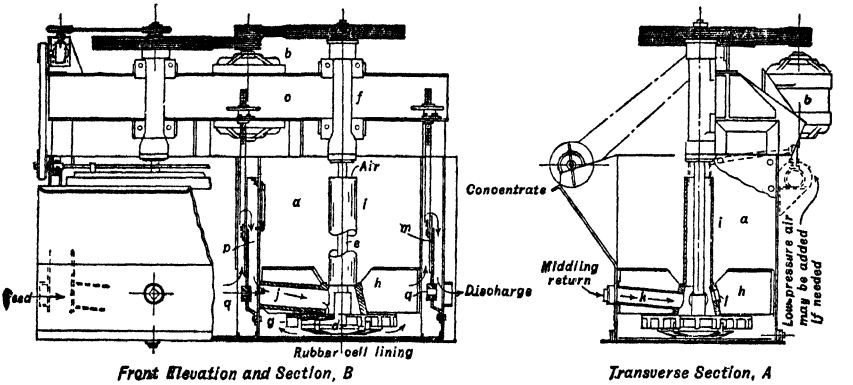

FIG. 27. Denver Sub-A machine.

positioned near the bottom, are carried on vertical shafts *e*, supported by long grease-sealed ball-bearing units *f* bolted to frame *c*. Drive is by V-rope from vertical motors *b*, bolted to the back of the drive frame; it may be either single, dual (as herein), or triple. The internal stationary assembly comprises a hood *g* bolted to four diagonal baffles *h*, which rest on slotted supports in the corners of the cell; the vertical pipe *i* which surrounds the shaft and registers with the periphery of the hole in the hood through which the shaft passes; the inclined pipe *j* leading from the head-end side wall to the vertical pipe; alternatively another inclined pipe *k* connecting the vertical pipe to the front wall; and a controllable port *l*.

In operation, with the cell full of pulp, feed is introduced continuously through the pipe *j* that leads from the head-end wall (view *B*). It flows onto the revolving impeller whence it is thrown radially toward the walls and thence starts upward in a roughly spiral path modified by the corners of the cell box. The radial baffles *h* stop the spiraling and prevent vortex formation so that the body of pulp above them is substantially quiescent as a whole, but is filled with eddies. The action of the impeller, in displacing pulp from its center to periphery, produces a flow of air down pipe *i*. This air is engulfed in the inflowing pulp and broken up into fine bubbles by the agitation in the impeller zone so that the pulp leaving this zone is impregnated with air and thus supplies the air necessary for treatment of the overlying body of pulp. Rate of circulation of pulp through the impeller zone and, consequently, the extent of aeration are controlled by the opening in port *l*, which is regulable. The pressure drop generated on top of the impeller and the fineness of dispersion of air depend to a considerable extent upon the configuration of the impeller and of the under side of the hood plate, upon the spacing between the impeller and the hood plate, which is regulable, and, of course, upon the speed of the impeller.

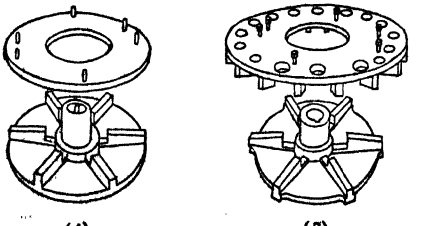

FIG. 28. Impellers and hoods for Denver Sub-A machines.

Impellers and hood plates are of two forms, as shown in Fig. 28. View *A* shows the older, so-called CONICAL-DISK FORM with 6 radial blades on the disk, tapering slightly toward the periphery, and a hood plate of substantially the same diameter, smooth on the under side but coned conformably. View *B* shows the RECESSED-DISK TYPE, with a similar impeller, differing in that the ribs are somewhat more tapered and project slightly beyond the bottom plate. The hood plate projects beyond the

impeller, the projecting part carrying depending lugs and having circular perforations between the lugs. This arrangement provides additional agitation at the periphery of the impeller and a consequent finer dispersion of air, while at the same time the perforations tend to direct aerated pulp upward nearer the center of the cell than otherwise, thus producing a more uniform distribution of rising bubbles. Wear is greater with the receded-disk type, hence it is not recommended for coarse pulps.

Bubble-column action is normal in the area embraced between the vertical walls of the cell. If the quantity of floatable mineral is small or the air supply deficient, so that it is difficult to maintain a good bubble column over this entire area, crowding boards are inserted. A small spitzkasten is normally provided, particularly for cleaner cells, in order to afford area over which there is no rise of bubbles, so as to allow some slow-draining solid to fall back before overflow, thus enriching the overflow material. For ores from which a bulky overflow is taken, a back overflow lip is provided.

Tailing is discharged over an adjustable weir *m*, the weir box being located toward the back of the cell. The small hole indicated by the arrow at *q* permits heavy sand to short-circuit the weir.

By suitable arrangement of the middling launder and capping or opening middling-return pipes *k*, froth overflow from any cell can be re-treated in another cell in the same machine. Thus it is usual to use, say, cells *4* to *10* of a 10-cell machine as roughers, feeding at cell *4;* return combined overflow to the middling-return pipe of cell *2*, making cells *2* and *3* primary cleaners, discharging cleaner tailing into the new feed in compartment *p* at the head of cell *4;* return cleaner concentrate to the middling-return pipe of cell *1*, which acts as a recleaner and discharges its tailing by weir to cell *2*.

SIZE is denoted by the manufacturer's number, which is approximately impeller diameter in inches, and the number of cells comprising the unit. Essential dimensions, and operating data corresponding to the numbers as compiled from the manufacturer's catalogue, are given in Table 13. The power figures

Table 13. Denver Sub-A machines

M'f'rs size No.	Dimensions of cell, in.			Cell volume, cu. ft.	Horsepower		Maximum recommended flow, tons solid per 24 hr. per 6-cell unit				
	Length	Width	Depth		Motor for 2 cells	Consumption per cell	% solids				
							15	20	25	30	40
12.....	22	22	28	8.5	2	1.0	60	80	105	130	190
15.....	24	24	27	12	3	1.3	65	90	120	150	220
18.....	28	28	33	17.5	3	1.5	100	135	175	220	320
18 Sp'l	32	32	34	22.5	5	2.2	190	270	350	430	630
21.....	38	38	39	40	7.5	3.3	230	320	420	520	760
24.....	43	43	39	47.5	10	4.2	385	530	700	860	1,260
30.....	56	56	51	100	20	8.0	890	1,240	1,600	2,000	2,920
Unit cell, p. 66											
a					*b*						
50.....	20	20	9 1/2	2.5	1.5	1.1					
100.....	24	24	20	6.7	2	1.5					
250.....	32	32	25	15	5	3					
500.....	38	38	29	24	7.5	5					
750.....	43	43	31	33	10	7.5					

a Tons new feed to grinding circuit. *b* For one cell only.

check with those reported (Q). PERIPHERAL SPEEDS in operation range from 1,450 to 1,850 r.p.m. CAPACITY is rated by the maker as 0.025 to 0.028 ton of slow-floating ore in a pulp of 25% solids per cu. ft. of rated cell volume per hr., and roughly double this for a medium-floating ore. PERFORMANCE figures tend to fall between 0.015 to 0.04 in pulps this dilute, averaging about 0.02, but in pulps containing 30 to 45% solids, which is a more usual range in practice for this type of machine, capacities range from 0.035 to 0.06 ton per cu. ft. of cell volume, with treatment times of 10 to 20 min. in roughing service; the figures are not greatly different in cleaner service. POWER CONSUMPTION ranges normally from 2.5 to 5 hp.-hr. per ton. Small amounts of low-pressure air are added (Fig. 27, view *A*) in practice when exceptionally dilute pulps are treated. ATTENDANCE requirements appear to be somewhat greater than for air cells, but 50 to 75 cells per man is not unusual.

Maintenance has been greatly reduced in this cell as compared with that in the older impeller-type machines by elimination of gear drive, use of heavy impeller shafts and long ball bearings, sturdy mounting of bearings and motor, and the use of rubber to cover the impeller, hood-plate, and diagonal baffles and to line the bottom and walls in the impeller zone. Field reports (Q) indicate that where cast-iron impellers and hood plates have lives of 15 days to 6 mo., according to size and abrasiveness of feed, and cast-iron baffles and liners from 60 days to 1 yr., rubber-covered impellers and hood plates last 3 to

6 yr. and liners and baffles more or less indefinitely. Old elevator belt used at BUNKER HILL & SULLIVAN to cover baffles and line walls and baffles lasts 2 yr. At BALMAT (*IC 6574*) cast-iron bowls and impellers in the lead circuit were replaced after 238 days (107,000 tons), and the impellers were again replaced after 173 days (99,000 tons); in the zinc and pyrite circuits the life of bowls and impellers was 411 days (201,000 and 164,000 tons respectively). Life of grids was 300 days in all machines. Hoods on the lead roughers treated 199,000 tons.

Feed sizes treated in subaeration machines are quite generally coarser than those sent to pneumatic cells, ranging, for some 30 mills reporting, from 65-m. maximum to 6% > 28-m.; the average is near 1% > 35-m. From a statistical standpoint, also, the great bulk of the USE is on high-sulphide ores. There is no doubt that these can be maintained in suspension more effectively in mechanical machines than in pneumatic, and when coarse sizes are treated to make low-grade bulk concentrates for regrinding and re-treatment, as is modern practice for auriferous and cupriferous pyrites, the maintenance of suspension in the flotation machine becomes important. FLOTATION TIME is definitely longer than in pneumatic machines for ores and pulp consistencies suited to the latter.

MT. LYELL reports that as between a subaeration and a matless cell working in parallel on a heavy sulphide feed <65-m., the subaeration machine is slightly superior in metallurgy and power consumption while the matless has the smaller maintenance, and that both are efficient and easy to operate.

Unit cell is a particularly rugged one-cell sub-A unit designed to scalp coarse pulps. It is frequently used in grinding circuits between mill and classifier. It is provided with a conical bottom trap with plug-cock discharge for collection and intermittent removal of coarse and heavy material. A sand-relief outlet, placed at *q*, Fig. 27, view *B*, leads by pipe to the bottom of the tailing weir box. Tailing discharges at a level sufficiently above the feed inlet, owing to the pumping action of the impeller, so that even with a trunnion screen, which it is advisable to install to scalp out tramp oversize, the cell can be installed without the use of auxiliary elevation in the ball mill-classifier line. A plan for installation is shown in Fig. 29.

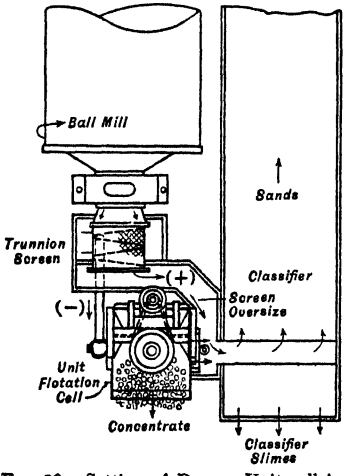

FIG. 29. Setting of Denver Unit cell in ball mill-classifier circuit.

SIZES and CAPACITY ratings are shown in Table 13 from manufacturer's figures. The "No." is the tons of solid per 24 hr. that the machine is rated to circulate in a grinding circuit.

Rubber-covered surfaces in the grinding zone are essential. At MCINTYRE PORCUPINE such surfaces on impeller and hood plate lasted about 9 mo.; at OMEGA the impeller lasted 40 days, hood plates 6 mo., and liners 12 mo.

Performance figures indicate capacities to be from 1 to 3 tons per hr. per cu. ft. of cell volume at pulp densities of 50 to 60% solid. The cell has been used principally in the treatment of sulphide gold ores and in lead-carrying ores; with some of the latter it can make a high-grade lead concentrate without the use of zinc or iron depressants, using starvation quantities of collector and frother. Early recovery of galena will normally have the effect of increasing over-all lead recovery because of its tendency to slime in a grinding circuit and the higher-than-average losses that occur in the finest fractions of flotation tailings. The cell has the incidental useful effect of tending to iron out the effects of irregularities in value of feed and to make operation of subsequent flotation units more uniform and, consequently, more efficient. At PILGRIM (*IC 6945*) a unit cell operating at 45% solids on <4-m. feed recovered 85% of the gold present with a ratio of concentration of 700 : 1.

Fagergren level-type machine (Fig. 30) comprises a trough *A* with vertical and sloping sides and a flat bottom, divided into cells by transverse partitions with upper and lower ports *Q* and *Q'*. In each cell is rigidly mounted a cylindrical grid or stator *B* (shown broken away in item *B*) carrying a standpipe *C*. The base plate *D*, carried on longitudinal angles *K*, supports the standard *E* and bearings *F* for the vertical rotor shaft *G* at the lower end of which is mounted the rotor *H*. This consists of a squirrel cage, the end plates of which are cut-out propellers. Feed pulp, introduced through box *L* and a low-level port, flows by gravity through the machine under a head determined by the height of tailing weir *M*. Centrifugal force imparted by the whirling squirrel cage causes the pulp and air pumped down by the rotor through standpipe *C* to stream out together between the bars of the rotor cage into a zone of intense shearing between rotor and stator, where the air is entrained and bubbles are broken fine. The aerated pulp then streams out through the stator bars into the surrounding body of pulp and the bubbles rise to form a bubble column at the

surface of the pulp. A sand gate N, adjusted by capstan R, discharges material too coarse to be lifted over the weir.

The form illustrated is new (1942). The STANDARD SQUARE FORM which preceded it was of the same general construction except that each cell was a unit, driven by an individual vertical motor, successive

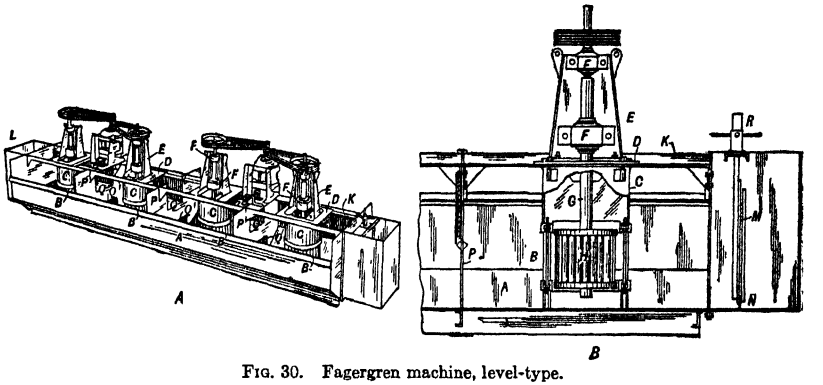

FIG. 30. Fagergren machine, level-type.

cells being set on successively lower levels, with individual pulp-level regulation by weirs, which discharged into under-floor conduits that fed up through the floor under the impellers, while intra-cell circulation was effected by a cruciform under-floor conduit, the arms pointing toward the corner of the cell, receiving pulp through ports in the cell bottom and delivering into the feed conduit and thence back to the impeller. A ROUND FORM differs in that the pulp chamber is a cylinder with overflow all around; no scraper is used, hence the cell is adaptable only for voluminous free-frothing conditions. Mead *et al.* (*U. S. pat. 2,304,270*) describe a form of round cell in which the tailing is drawn from a submerged circular weir below the froth overflow lip, so that the tailing stream cuts across the stream of bubbles rising to the bubble column. The specification asserts higher grade of phosphate concentrate than was made on standard Fagergren cells in parallel, at the expense of a higher grade of tailing. An oblong form, as installed at the UTAH COPPER Co. mills, is shown in Fig. 31. It illustrates the under-floor feed and circulation conduit with plugs in the floor for regulating circulation.

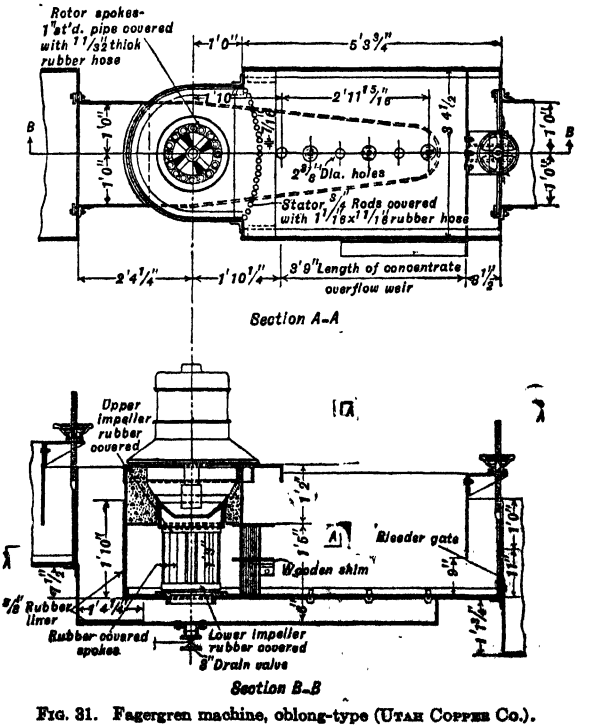

FIG. 31. Fagergren machine, oblong-type (UTAH COPPER Co.).

SIZE of cell is indicated by the number of inches length of one side of the square cell, the diameter of the cylindrical box of the round cell, and, for the oblong cell, by the size of the square cell in which a motor-rotor combination of the same size would be used. Standard sizes are 28-, 36-, 44-, 56-, and 66-in. Corresponding square cell volumes are 5.5, 13, 23, 47, and 70 cu. ft. Manufacturer's maximum CAPACITY ratings are 0.063, 0.11, 0.15, 0.15, and 0.20 ton per hr. per cu. ft. of cell volume respectively for the five sizes. Corresponding estimates of POWER CONSUMPTION are

1; 2, 4, 6, and 8 hp. per cell for square cells and about 30% higher for the level type. SPEED is about 2,100 f.p.m. peripheral.

Performance reports (Q) are substantially all for the 56-in. size; they indicate that the above maximum figures for capacity are reached in lead flotation in pulps containing 35 to 45% solids; that in roughing zinc, copper, and gold ores in pulps containing 25 to 35% solids the figure averages 0.09, with a range of 0.03 to 0.15; that in cleaning these same ores the average duty is 0.03 with a range of 0.01 to 0.07, and finally, on the basis of two reports only, that in roughing lead ore in pulps of 45 to 50% solids, figures of 0.2 and 0.6 ton per hr. per cu. ft. of cell volume are being reached. POWER CONSUMPTIONS are close to the above estimates, which give an average range of 1 to 2 hp-hr. per ton for roughing service, but this figure rises rapidly to two or three times the maximum, if roughing time is permitted to rise, or in difficult cleaning service. MAINTENANCE may be estimated from the following field reports. White cast-iron rotors and stators have a life of 40 to 50 days with hard ore and moderate loads; the same parts rubber-covered last from 220 and 400 days, respectively, to upward of 4 yr., the lower lives being for relatively heavy service.

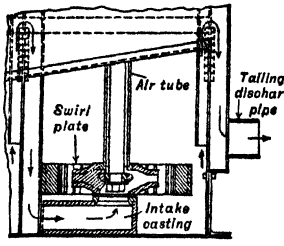

FIG. 32. Interior of UIW cell.

TREATMENT TIMES reported range, in general, from 5 to 15 min. in roughing service, the higher figures corresponding to the more dilute pulps. These figures show much more rapid flotation action than occurs in most other cells and indicate that considerable precipitation-type levitation is superimposed on the very effective bubble-column action that is evident in observation of the cell. Such action is to be expected from the high peripheral speed of the rotor and the fact that the great part of its agitating surface is concentrated at its periphery.

UIW machine (Fig. 32), used at BUNKER HILL & SULLIVAN (Sec. 2, Fig. 108), is of the square-cell one-level type with a small spitz at the front and the back crowded in as in Fig. 38. The double-shrouded tapering impeller with a central opening top and bottom is carried on a solid shaft surrounded by an air tube with adjustable air inlet at the upper end. A circular swirl plate with the comblike configuration of an internal gear surrounds the impeller. Pulp level is controlled in the individual cells by adjustable weir overflows and middling is returned from the launder to the head cells by a pipe or pipes to the respective intake castings.

SIZES are stated as the edge dimension of the square cells; 24-, 32-, and 42-in. sizes are standard. Corresponding impeller diameters are 11, 16, and 20 in.; spitz projections, 9, 12, and 15 in.; cell volumes, 10.2, 27.8, and 49.4 cu. ft.; and approximate POWER CONSUMPTIONS per cell, 0.8, 2, and 4 hp. Maker's CAPACITY ratings average between 0.04 and 0.045 ton per hr. per cu. ft. of cell volume.

Pan American machine (Fig. 33) is of pure subaeration type, designed to minimize power consumption. This is effected by placing a relatively small (8-in. in a cell 48 in. square) cavitation-type impeller *a* near the surface of the pulp in a deep cell, so arranging it at the throat of a low-pressure submerged ejector *b* that rapid circulation of the pulp upward through the ejector and downward outside is effected. Air for ejection flows by atmospheric pressure into the low-pressure zone behind the impeller blades through the hollow shaft; the bubbles are sheared and finely subdivided by turbulence effected by baffles *c* and conical deflector *d*, and the overlying bubble column is protected by perforated plate *e*. Feed enters the cell at *f* and pulp passes to the following cell through port *g*. Overflow is front and back and is controlled by raising or lowering the V-shaped crowding board *h*. Pulp volume of the 48-in. machine, 9 ft. deep, is about 115 cu. ft. The ratio of air-swept volume to total volume is low. Maker's figure for power consumption per 8-in. rotor is 3 hp.

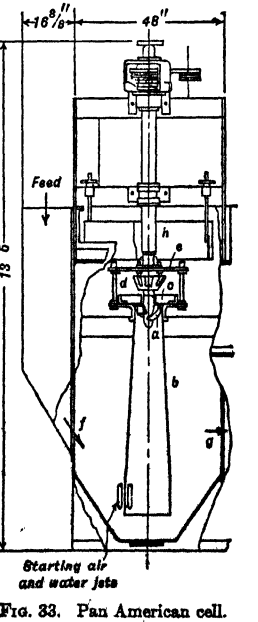

FIG. 33. Pan American cell.

Machines with External Blowers

Minerals Separation subaeration machine is made in three principal forms known respectively as the BRITISH-TYPE, AMERICAN-TYPE, and COUNTER-CURRENT machines. The American type, shown in Fig. 34, consists of a series of square cells *a* set side by side on the same level, each fitted with a top-shrouded pump-type impeller *b* (Fig. 35, item *b*) mounted just above a false floor, a perforate baffle plate *c*, a crowding board *d*, a weir compartment and weir *e*, and a small triangular offset zone *f* on the front. Feed enters the head cell

through a box which delivers to the passage *g* under the false floor whence it is forced through port *h* and a registering port in the impeller bottom plate into the zone of subatmospheric pressure engendered within the rotating impeller. Air is likewise introduced into this zone through pipe *i*. The mixture of air and pulp is discharged at the periphery of the impeller, the shearing action with the mass of slower-moving surrounding pulp serving to break the masses of air into small bubbles. The mixture of bubbles and pulp rises through the openings in *c*, swirling and surging being diminished thereby, and the bubbles rise through the substantially quiescent pulp above to form a bubble column thereon. The

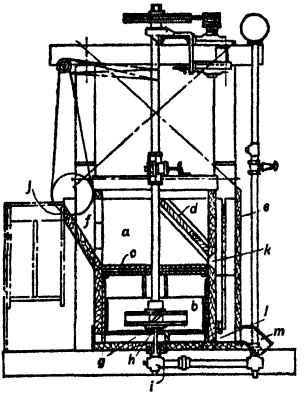

FIG. 34. M.S. subaeration machine (American-type).

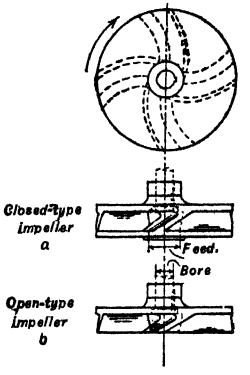

FIG. 35. Impellers for M.S. subaeration machines.

crowding board has the effect of pushing the whole bubble column horizontally toward overflow lip *j*, and the decreased bubbling in *f* permits a less impeded drain-back over this zone. Pulp flows through port *k*, over weir *e*, and thence through passage *l* to the subfloor feed passage of the next cell. Final tailing discharges through port *m*, which is on the last box only.

SIZE of machines is indicated by impeller diameter and number of cells. Usual impeller diameters are 12, 15, 18, and 24 in.; horizontal cell dimensions are twice the impeller diameters; corresponding cell pulp volumes are 12, 22, 36, and 72 cu. ft. with normal depths of bubble column. The maker's CAPACITY rating is about 0.04 ton solid per cu. ft. of machine volume per hr. in a 25% pulp. SPEED is about 1,450 f.p.m. peripheral. Maker's estimates of POWER CONSUMPTION for this speed are 1.5, 2.2, 3.2, and 4.5 hp. per cell respectively for the 4 sizes of cell, exclusive of air supply. At TYBO (*IC 6430*) 18-in. impellers drew 2.6 hp. in pulps containing 30 to 35% solids and 2.4 in pulp with 25% solids. At BROKEN HILL NORTH (*134 #2 J 61*) 15-in. impellers at 560 r.p.m. consumed 6 to 7 hp. per spindle.

Performance figures as to capacity, mostly on lead-zinc ores, fall well below manufacturer's figures; for pulps containing less than 25% solids the range is 0.015 to 0.024 ton per hr. per cu. ft. of machine volume in roughing service, average 0.018, and 0.029 for one operation in cleaning service; for 25 to 35% solids the average is 0.017 (range 0.014 to 0.021) in roughing service; for 35 to 45% solids the average, all in roughing service, is 0.030, with a range of 0.020 to 0.040 (8 cases); for greater than 45% solids one figure is available for roughing, showing 0.06 ton per hr. per cu. ft. of machine volume, while two figures for cleaning are 0.011 and 0.014. Figures from the field for POWER actually consumed in driving impellers are few, but those available indicate that the manufacturer's figures are safe for estimating purposes. Average power consumption on this basis ranges from 2.5 to 5.5 hp-hr. per ton. AIR CONSUMPTION is 10 to 30 cu. ft. per min. per 24-in. cell at 1.5 to 2 lb. per sq. in. pressure, with the average between 20 and 25 cu. ft. Cast-iron IMPELLERS last from 150 to 2,000 days, the lower figures being for 35-m. pulps in roughing service and the higher for fine sulphide pulps in cleaning service. Cast-iron LINERS last one year upward and rubber-covered wood lasts indefinitely in this service.

Countercurrent machine (Fig. 36), the latest form of M.S. machine, is essentially the same as the American-type subaeration machine except that the transverse partitions are broken with large ports just above the perforate baffle plates *c* (Fig. 34), and the forward flow of pulp is through a port in the false floor against the transverse wall and thence by an underfloor channel to the next impeller, which is shrouded on the top side only. The theory of the manufacturer is that since the pumping capacity of the impeller is normally greater than the feed rate and the discharge weir is higher than the bottom of the slots in the transverse walls, a back head is built up on these slots and a counter flow of pulp thus effected. Control of level in individual cells is sacrificed, there being only the tailing weir. Air is forced in under the impeller. The cell is shallower than the regular M.S. subaeration cell.

so that somewhat less power is required for pumping, and back pressure on the external air is slightly less.

IMPELLER DIAMETERS are 12, 15, 18, 21, and 24 in.; corresponding cell volumes are 8, 16, 27, 43, and 64 cu. ft. Maker's CAPACITY rating is 0.1 ton per hr. per cu. ft. of machine volume in a 25% pulp. This

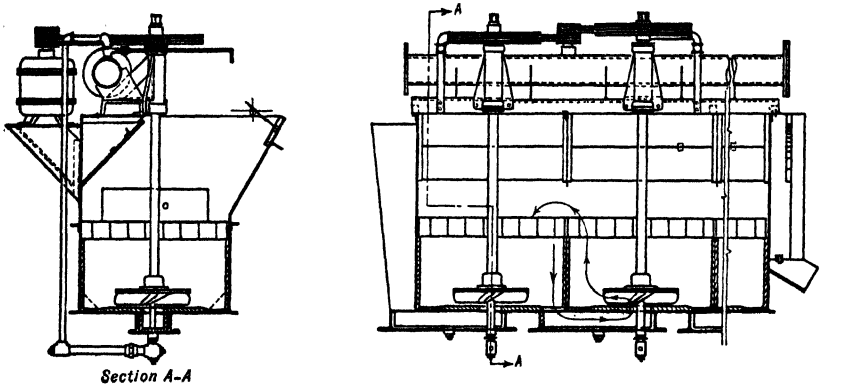

FIG. 36. Minerals Separation countercurrent machine.

corresponds to about 4 1/2-min. treatment time. PERFORMANCE figures are few but they do not indicate any such capacity. Normal treatment times are 10 to 20 min. Corresponding capacities would be 0.027 to 0.045 ton per hr. per cu. ft. of machine volume in a 25% pulp.

Geco machine (Fig. 37) is of the square-cell single-level type with single or double spitz. All cells in a block are on the same level. Inter-cell transverse walls terminate at *a*, some distance above the cell floor, affording a continuous open passage for pulp from feed intake to tailing weir. An annular plate casting *b*, resting on the cell floor, carries upwardly projecting radial blades *c* which surround the impeller *d*. The latter is of the top-shrouded form with cruciform vertical dependent blades. Underneath it is placed a shallow conical pan *e* with 8 baffles radiating from a central pipe through which blower air is introduced from the bottom. Baffles *c* are surrounded by a circular band *f*, welded to the corner braces *g*.

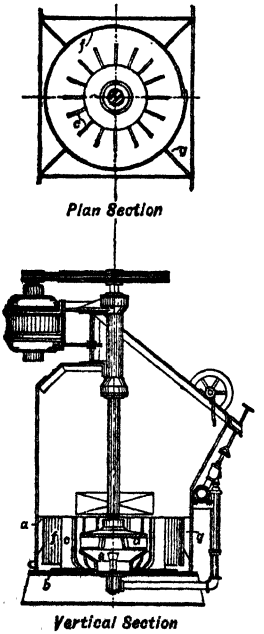

FIG. 37. Geco machine.

SIZE is indicated by the dimension of the square plan section of a cell in inches. Standard sizes are 24-, 30-, 36-, 42-, and 48-in., available in 2- to 12-cell blocks in 2-cell steps. Corresponding operating cell volumes are approximately 6, 14, 20, 32, and 48 cu. ft. CAPACITIES are to be estimated on time-factors.

Weinig machine, Fig. 38, is a single-level square-cell machine built in 2-, 3-, 4-, 6-, 8-, and 10-cell blocks. Feed enters a given cell through down-passage *a* and thence by underfloor passage *b* through passage *c* into the impeller zone. Cruciform baffles *d* prevent swirl. The impeller *e* is bladed as shown in Fig. 39. The bubble column is crowded at the back side by the in-slanting back wall *f*, and column drainage is provided at the front by flaring the upper part of the front wall. Cell tailing is discharged over weir *g*, adjustable by handwheel *h*. Air is introduced from main *i* via valved branch pipes *j*, stuffed compartment *k*, and holes *l* into the hollow impeller shaft and thence to the lower face of impeller *e*. Passages *m* are provided for middling return from the overflow launders and may be opened or blocked off as desired. Liners *n*, baffles *d*, and impellers are hard iron in standard equipment, but molded-rubber impellers are available and recommended for coarse abrasive pulps. Clearance between impeller blades and cell bottom is 1/2 to 1 in. Drive is designed for impeller speeds of 1,500 f.p.m. peripheral.

IMPELLER DIAMETERS are 10 in. in No. 6 1/2 cell, 15 in. in Nos. 10 and 16, 18 in. in No. 22, 21 in. in No. 40, and 24 in. in Nos. 50 and 75. Cell numbers, indicating machine sizes, are the nominal cubages per cell. POWER CONSUMPTIONS per cell, as estimated by the manufacturer, are respectively for the

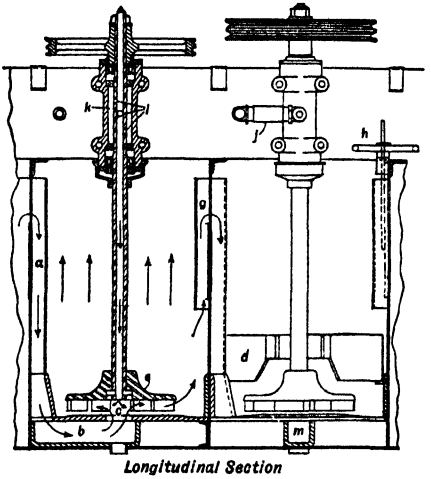

Longitudinal Section

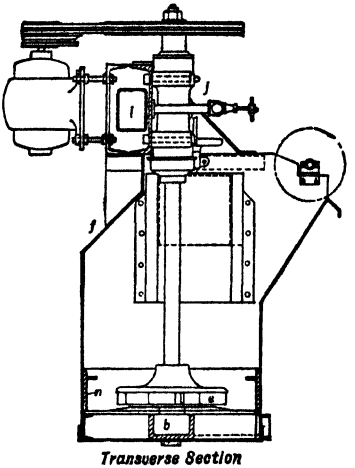

Transverse Section

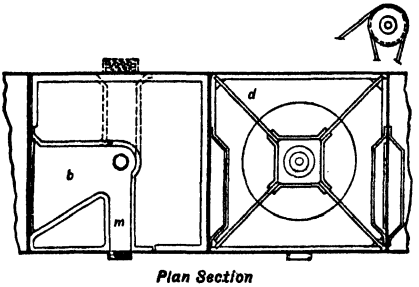

Plan Section

FIG. 38. Weinig machine.

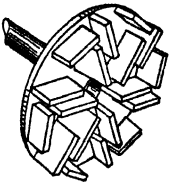

FIG. 39. Impeller for Weinig machine.

sizes listed 1, 1.5, 1.8, 2.5, 3.2, 4.5, and 5.5 hp. AIR is recommended in an amount equivalent to 0.5 cu. ft. per min. per cu. ft. of cell volume. CAPACITIES are to be determined from time-factor. For estimating purposes the manufacturer gives from 0.6 ton per 24 hr. per cu. ft. of cell volume for the No. 6 1/2 cell to 0.75 ton for the No. 75 cell for a slow-floating ore and 1.5 times these figures for average ores. At CLIMAX, 30 No. 40 Weinig roughers in series treat 62 tons per hr. of <35-m. feed in a pulp containing 40 to 50% solids. Forty cu. ft. per min. of air at 1-lb. pressure is supplied to each cell, and impeller power is 4 hp. per cell, making 2.1 hp-hr. per ton for roughing. In primary cleaning, 36 No. 40 cells treat 25 tons per hr. with the same power consumption per cell or 6 hp-hr. per ton. In recleaning, 6 tons per hr. is fed to 24 cells or 17 hp-hr. per ton. Over-all consumption for the three steps is about 6 hp-hr. per ton of original feed. These figures are in no way excessive for the service.

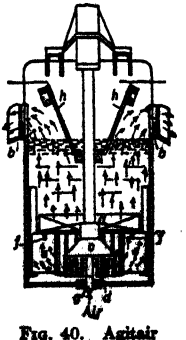

FIG. 40. Agitair machine.

Agitair machine (*U. S. pat. 2,182,442*/1939) consists of a rectangular trough, subdivided into a plurality of square compartments (Fig. 40) by transverse partitions with slotted openings *a* connecting adjacent compartments; a feed box at one end; an overflow weir at the other end for tailing discharge; two froth-overflow weirs *b* on opposite sides of each compartment; and an aerating agitator in each compartment. The agitator comprises an inverted cone *c* with cylindrically disposed teeth *d* depending from the periphery of the base, all mounted on a centrally placed spindle. Sixteen radial baffles *e*, equally spaced, are carried on a ring *f* and the structure is supported in place by the four corner baffles at such a height that a free circulation space is left underneath. Air introduced through pipe *g* is finely dispersed by the coaction of the impeller

teeth and the radial baffles; the latter also prevent swirl. Breaking down of bubble column by the agitator shaft is prevented by the V-shaped crowding baffle *h*, which is set to dip below pulp level; it also does away with the necessity for scraping froth.

SIZES are Nos. 24, 36, and 48, signifying the length in inches of the sides in plan of the square agitating compartments. Corresponding cell volumes are 10, 22.5, and 44 cu. ft. Drive is V-belt by 2-cell units; POWER installation is 1.5, 2.5, and 5 hp. per cell. Impeller SPEED is about 1,700 f.p.m. Units are 2-, 4-, and 6-cell and are built with registering feed and discharge ports in the end walls, to which feed and discharge boxes may be bolted or through which, when two sections are bolted together end to end, pulp in process passes. Bottom is lined with rubber and lower side walls with manganese steel. The baffle unit is supplied of alloy steel, reversible to permit double wear. IMPELLERS are of hard cast iron. Rubber sleeves therefor, enclosing the sides and outer surfaces of the teeth and the lower outer surface of the cone, are available, as are also impellers with standard rubber covering. Maker's statement as to POWER CONSUMPTION is that it ranges from 0.9 to 2.6 hp-hr. per ton according to the speed at which the ore floats. L. E. Booth (*PC*) reports 250 t.p.d. fed to a 10-cell 24-in. machine at MONTEZUMA-APEX, power consumption 0.9 hp-hr. per ton; at MAGMA, 250 tons to an 8-cell @ 36-in. machine, 1 hp-hr. per ton; at VIENNA, 75 tons to a 6-cell @ 20-in. machine, 1 hp-hr. per ton.

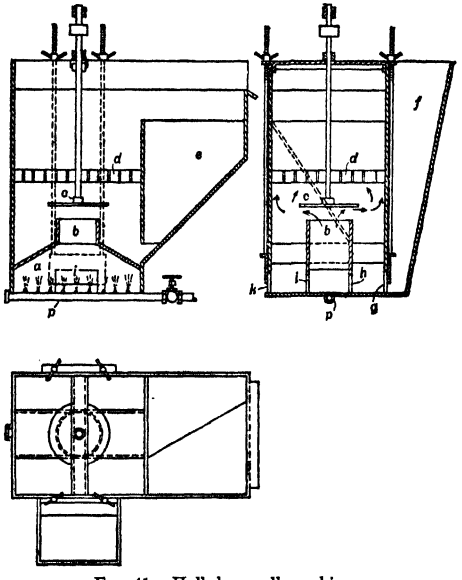

FIG. 41. Hall deep-cell machine.

Hall deep cell (*U. S. pat. 2,141,862;* Fig. 41). Pulp is aerated and circulation induced by introduction of multiple streams of air through pipe *p* into the pulp in a bottom compartment *a* of the cell; the coarsely aerated pulp discharges by internal air-lift action through a chimney *b* under a smooth disk *c* about 2 ft. diam., rotating at about 5,000 f.p.m., which produces very fine dispersion. Grid *d* prevents swirl. Feed is introduced at *f* and flows through ports *g* and *h* into compartment *a;* entry into *a* is also had by port *i;* middling drops out in *e* and is returned by the eccentric hopper to the feed side of compartment *a*. Tailing discharges through port *k*. The machine was designed for use at ALASKA JUNEAU for ores containing a very small amount of floatable material. Considerable saving in power and maintenance is claimed.

Gayford *et al.* (*U. S. pat. 2,073,148*) describe a perforated bladeless impeller over a canvas or rubber mat of slightly smaller diameter. The purpose is to reduce power and swirl. Compartment area to disk area should be about 3.8 : 1; cell area to mat area 5.7 : 1. Cell is 24 in. square, disk 14 in. diam., mat 12 in. diam., peripheral speed, 2,200 to 2,500 f.p.m.

Subaeration *vs.* pneumatic machines. Reliable comparative data are scarce. The weight of the evidence appears to be that for easily floatable ores of normal maximum sizes (65-m.) treated at usual pulp density (20 to 30% solids) the pneumatic cell gives the same metallurgical results as the subaeration but more cheaply. The subaeration machine, because of partitioning, permits greater flexibility in variation of treatment along the flow; it can handle thicker and coarser pulps; is more intense in its aerating action; by its attrition effects, it decreases harmful multicoating by collectors, and is, therefore, superior for the more soluble salt-type minerals (nonsilicate nonsulphides).

Logue, writing in the house organ of the manufacturer (*Tref 9/40*), gives comparative sizing-assay tests on Denver and air-lift machine products operating on the same ore (Table 14). With over-all recovery the same in the two machines, the subaeration made 1.4% better grade of concentrate, primarily because of better rejection of <10-μ gangue, the resulting loss in recovery at this size being compensated by a higher recovery in the coarser sands. Similar experience is reported on molybdenite at QUESTA (*IC 6551*), where the Ruth subaeration machine gave superior recoveries on sandy feed but the Callow was better on slimes.

At POTOSI (*IC 6706*) it was found that pneumatic machines would not float coarse mineral. At PECOS (*IC 6605*) it was concluded that air-lift machines with heavy sulphide pulps tend to float everything when enough air is used to maintain suspension, and that they are not good for close separations because the air cannot be cut below the suspension minimum, which may be too much. This view is not, however, generally accepted.

Table 14. Sizing-assay test of products of subaeration and air-lift machines in parallel service (*After Logue*)

Size, μ	Subaeration				Air-lift			
	Concentrate		Tailing		Concentrate		Tailing	
	% weight	% Cu	% weight	% Cu	% weight	% Cu	% weight	% Cu
>208	1.8	27.14	6.5	0.16	0.4	28.80	6.5	0.21
147	4.6	29.26	12.3	0.14	1.9	29.28	12.4	0.18
104	8.3	29.08	10.7	0.11	4.3	29.54	10.8	0.16
74	12.2	30.60	12.2	0.11	8.4	30.92	12.4	0.12
50	16.2	30.24	20.5	0.09	13.1	31.68	20.7	0.09
30	19.1	29.54	14.3	0.07	16.7	31.82	14.7	0.06
20	15.3	28.40	8.9	0.09	18.8	30.92	8.6	0.06
10	15.3	26.18	4.5	0.10	16.8	29.85	4.3	0.08
<10	8.9	18.73	10.1	0.26	19.5	10.66	9.6	0.16
Total.....	100.0	28.36	100.0	0.12	100.0	26.94	100.0	0.12
>74	27.0	29.7	.....	.....	15.0	30.2	.....	.....
<74	73.0	27.9	.....	.....	85.0	26.4	.....	.....
Recovery, %....	91.0				91.0			
Ratio conc'n.....	24.3				23.1			

PULP-BODY MACHINES

These machines may be classified, on the basis of the method of effecting gas precipitation (see Art. 11), into three types: (1) boiling, (2) chemical-generation, (3) pressure-reduction. The machines are characterized by the production of heavy-laden clotted froths, unless the amount of material floated is minute. They utilize relatively small amounts of gas, rarely more than 100 cu. ft. per cu. ft. of solid floated, running down to 20 cu. ft. per cu. ft. or less. Their elements vary somewhat according to the type, but comprise as essentials a tank to contain the pulp during the time of treatment, means for effecting gas precipitation therein, a tank (which may be the same as the first) in which the pulp is sufficiently quiescent to permit separation of agglomerates of gas and selected mineral from rejected mineral by gravity, and separate weirs or ports for discharge.

24. BOILING PROCESS

This process, described by Bessel Bros. in 1887, was the first of the froth-flotation processes. It is operated by heating a conditioned pulp, preferably containing some oily collector and preferably also lightly deslimed, to a temperature preferably below that of active boiling. Apparatus comprises any mixing tank in which oiling may be effected, and a second tank in which the settled sand underneath a relatively dilute pulp (15 to 25% solids by weight) may be heated and at the same time stirred gently to release gas-mineral agglomerates. Separation is rapid and relatively complete.

The method has not been used commercially for ores. Heating is expensive and slow. The process is operative with deaerated water in a sealed flask, *i.e.*, with water vapor only as the bubble filling.

25. CHEMICAL-GENERATION PROCESS

This process depends upon chemical reaction to generate gas in the pulp. The usual reaction is that between a carbonate and an acid to generate CO_2. Decomposition of the pulp water by electrolysis has been described (*Brit. pat. 13,579*/1904; *U. S. pat. 1,329,127*/1920). Deslimed feed and an oily collector are preferable. Apparatus for the CO_2 process comprises a mixing tank for conditioning and a separating tank in which the conditioned pulp mixed with finely granular limestone or dolomite is relatively quiescent. Here acid is added and the settled sand is stirred just enough to release agglomerates. Heat aids the operation materially.

Potter-Delprat process (*U. S. pats. 735,071*/1903, *763,668*/1904, *768,035*/1904, to Delprat and *776,145*/1904 to Potter) was the first froth-flotation process commercially successful with sulphide ores.

Dewatered pulp is fed into an apparatus of the type shown in Fig. 42. Hot sulphuric-acid solution of 1% to 10% strength or acid salt-cake solution of 1.3 to 1.4 density is introduced through the pipes *a* to the bottom of the vat. Dewatered sand carrying carbonate is fed to maintain a layer of solids 2 ft. or more in height, depending upon the depth of the vat, teetering above the spigot. A coherent froth overflows. The tailing is drawn off as a thickened product from the spigot at the bottom of the box. The compartment without a spigot is for the purpose of collecting any coarse particles that would tend to clog the spigot. Temperature was high enough in Australian operations to precipitate considerable air and water vapor. No oil is added, but there is no doubt that the lubricating oil introduced in ordinary mining operations is sufficient for collection and froth stabilization.

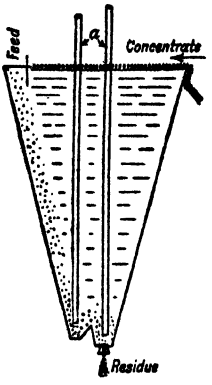

FIG. 42. Delprat frothing box.

Performance (*117 P 375*). The principal use of this process was at the BROKEN HILL PROPRIETARY MINE, N.S.W. Feed was deslimed tailing from the gravity-concentrating mill, practically all of which would pass a 40-m. screen and from 20 to 25% remained on 60-m. The gangue was principally quartz, rhodonite, and garnet with some gneiss from the walls and small amounts of rhodocrosite, siderite, and calcite, totaling about 0.5% CO_2. Feed assayed about 17% Zn, 3% Pb, and 4 oz. Ag per long ton. The boxes were cast iron, 8 ft. × 9 ft. surface area, 2 ft. × 1 ft. at the bottom, and 15 ft. deep. Solution pipes were cast iron, tipped for 2 ft. 6 in. with 2-in. lead pipe drawn down at the end to 1/2-in. and perforated near the end with 1/4-in. holes. Sulphuric acid solution (1%) heated to about 190° F. in stock-solution tanks by the use of superheated steam was mixed with the moist ore (6 to 9% H_2O) in the tank. Capacity was 10 to 20 long tons per hour. Recovery occasionally got up to 90% but the general average was 80%. Grade of concentrate was worked up to 48 to 49% Zn, 6% Pb, and 10 to 12 oz. Ag. Concentrate was about 8% >40-m. and 17% <200-m. Tailing assayed 3% Zn, 2% Pb, 2 oz. Ag per long ton. Three to 3. 5 tons of solution was added per ton of ore, entering under a pressure of approximately 15 lb. per sq. in.; acid consumption, including 1 to 2 lb. per ton of original feed discarded with the tailing, was 25 to 30 lb. per ton; strength of solution returning to stock tanks, 0.6% acid. Temperature of solution in the frothing boxes was 165° F.; and of solution drained from concentrate and returned to the stock tanks, 145° F.

At this same plant slime feed was concentrated with heated (140° F.) acid solution (0.3% H_2SO_4) without oil by sending the pulp through a series of four centrifugal pumps and separating boxes in alternate series. Concentrate assayed 34% Zn, 25% Pb, and 40 oz. Ag; tailing, 4% Zn, 9% total Pb (8% oxide), and 4 oz. Ag. Plant capacity was 3,000 tons per week.

Froment process was patented in 1902 in Italy and Great Britain but was not patented in the United States.

Finely pulverized ore with 1 to 2% of limestone is fed into a mixer in a pulp containing about 30% solids; animal or vegetable oil in an amount equivalent to 1 to 1.5% on the ore is added and the mixture agitated at the rate of 1,000 to 1,500 f.p.m. peripheral speed. The agitated mixture is next run into a shallow vat provided with a slow-moving rake at the bottom. Sulphuric acid of about 30% strength in an amount sufficient to react with the limestone present is slowly added through a perforated coil suspended just above the rakes. Desliming of the feed aids in making clean concentrate, but is unnecessary with certain oils or if a small amount of acid is added in the mixing vat.

The Froment process never went into commercial operation. Tests in a laboratory apparatus treating zinc ore gave rough concentrates assaying 35 to 45% Zn and tailings 0.6 to 0.8% from feed assaying 11 to 12%.

Other chemical-generation patents are described in *Ed. 1, 792.*

PRESSURE-REDUCTION PROCESSES

These processes have been described in three forms: (1) Plus-pressure type, in which an oiled (and preferably deslimed) pulp was subjected to superatmospheric pressure in a closed tank by pumping in air, and was then jetted into an open tank provided with a froth-overflow weir and a tailing spigot. This was never used commercially. A modern form for treating coal is described by Price (*U. S. pat. 2,142,207*). (2) Vacuum type. (3) Agitation-froth type.

26. VACUUM PROCESS

The essential elements of vacuum-flotation operations are conditioning of the pulp and subjection of conditioned pulp to a vacuum in apparatus that permits separation of froth and tailing. Deslimed pulp and an oily collector are desirable.

Elmore vacuum plant, which had limited commercial use, is shown in Fig. 43. Pulp ground to at least 0.5-mm. maximum size and containing about 50% solids was mixed in tank *d* with oil in an amount generally less than 0.5% on the ore, with or without acid, and thence was discharged into the feed pipe *a* of the separating apparatus. Here water was added to bring the pulp to a consistency of 15 to 25% solids. The separating apparatus was a closed conical chamber fitted with a slowly revolving rake at the bottom, a tailing-discharge pipe *b* at the periphery, and a concentrate-discharge pipe *c* from near the apex. The separating chamber was attached to a vacuum pump. The lower ends of pipes *b* and *c* were sealed by causing them to discharge below the surface of liquid in tanks as shown. The vertical lift in the pipe *a* was about 25 ft. and the vertical length of the pipes *b* and *c* was somewhat over 30 ft. A vacuum of 20 to 27 in. of mercury was maintained. Under the influence of this vacuum the pulp fed into pipe *a* passed up into the separating chamber. Froth overflowed into an annular launder and passed down pipe *c*. At the same time tailing was slowly scraped to the periphery of the floor and passed down pipe *b*. The rate of flow in pipes *a* and *b* was so regulated that the pulp level was maintained slightly below the overflow lip.

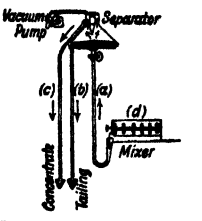

FIG. 43. Elmore vacuum plant.

Capacity of a 5-ft. separator was from 25 to 50 tons of ore per day. Re-treatment of concentrate was not ordinarily necessary. Power consumption per pan was well under 5 hp. for mixer and vacuum pump together.

Development of the vacuum process was stopped by the introduction of the agitation-froth process, but it is probable that if the same amount of work had been expended in attempts to make the vacuum process highly efficient, as was spent in bringing the agitation-froth process to its present degree of efficiency, the results would have been equally favorable. Slimes are easily treated, if sufficient agitation with proper agents precedes the vacuum treatment, but granular sulphide is most easily treated out of the presence of slime.

At ZINC CORPORATION (*88 J 205*) the feed to vacuum machines contained 20% Zn, 5.75% Pb, and 8 oz. Ag per long ton. Concentrate assayed 43% Zn, 11% Pb, and 17 oz. Ag.; tailing 3.5% Zn, 2.2% Pb, and 2.2 oz. Ag. ACID CONSUMPTION ranged from 10 to 20 lb. per long ton; Texas fuel oil, 6 to 8 lb. per ton. Cost of flotation alone (1909) was $0.55 to $0.60 per ton. Claudet (*103 J 786*) says that a standard unit will treat 35 tons of <10- or <20-m. molybdenum ore per 24 hr., using a small quantity of coal oil (kerosene) and that molybdenite floats preferentially to pyrite and pyrrhotite. Slime is overflowed before flotation. At KVINA MINES, Norway (*19 CMI 127*), feed assaying 0.8 to 1.0% MoS_2 produced concentrate containing 75 to 85% MoS_2, representing 80% recovery.

27. AGITATION-FROTH MACHINE

This machine is essentially a device for continuous production of localized superatmospheric pressure and partial vacuum in pulp in a tank open to the atmosphere. This result is effected by rotating a bladed agitator at high speed below the surface of pulp in an open-topped tank square in cross-section or baffled so as to prevent centrifugal swirl. The pulp in front of the impeller blades is under superatmospheric pressure, owing to its inertia and the pressure of the blade; that directly behind the blade is under reduced pressure owing to its lag behind the rapidly receding rear face of the blade. The rotation of the impeller introduces air by engulfment at the surface of the agitated pulp and, in shallow boxes, by downward extension of the vortex until its tip is cut off into the pulp by the revolving impeller. The engulfed air is broken up into fine bubbles by shearing action in the liquid induced by agitation, and dispersed throughout the mass of pulp in the box. That part of the aerated pulp in the region of superatmospheric pressure ahead of a blade dissolves air. When it escapes from this region, particularly if the escape is into the region behind a blade, there is rapid and pronounced pressure drop and gas precipitates. In so doing, if collector-coated particles are present, the precipitation is preferential thereonto. In continuous apparatus pulp discharges from the agitation chamber into a settling box provided with a froth-overflow weir and a tailing-discharge port.

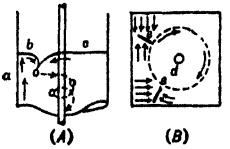

FIG. 44. Aeration by rotary agitation.

Aeration is readily observed in a deep square glass jar with a cruciform agitator near the bottom. When the jar is partially filled with water and the agitator is rotated at such a speed that occasional bubbles of air only are introduced, these act as tracers and the action of surface engulfment may be seen as in Fig. 44. In elevation *A* water forced up the corner *a* of the jar flows down hill at *b*. As it comes to the lower level *c* of the swirling water mass surrounding the impeller (*d* in plan view *B*) an irregularly oscillating downward-pointing V is formed along lines *e*. At irregular short intervals these close together above the point of the V and a bubble of air is engulfed. This travels in to the impeller

shaft and thence along a spiral path downward around to the region around the impeller blades, where it is broken up and dispersed. As speed increases the rate of surface engulfment increases until it becomes substantially continuous.

Gas precipitation by agitation. If the square glass jar is provided with horizontal baffles fitting as closely as possible around the shaft and against the walls and placed just below the water level, when agitation is started there is no surface engulfment and no vortex forms, hence there is no introduction of air from the surface. If, however, the rate of revolution of the impeller is gradually increased, a speed is finally reached at which the liquid in the vessel becomes cloudy, showing the presence of finely divided gas bubbles. When agitation ceases, air bubbles collect under the baffle plates. If these bubbles are released by tilting the plates and the impeller is again started, a higher speed must be reached before gas again precipitates, provided the temperature of the water has remained the same. Increase in temperature from 12° C. to 30° C., the heating being accomplished on a water bath without stirring, lowered the critical speed of gas precipitation with a 3-in. impeller from 1,535 to 395 r.p.m. When heating to the same temperature was done by an electric heater, on which much gas precipitated during heating, the critical speed was 940 r.p.m. Adding pine oil to the water (0.006%) lowered the critical speed at 12° C. to 980 r.p.m.

Table 15. Suction behind blades of the impeller of an agitation-froth machine

R.p.m. of impeller	Vacuum, in. Hg	R.p.m. of impeller	Vacuum, in. Hg
370	0.22 *a*	1,380	4.4
475	0.29 *a*	1,490	5.2
580	0.43 *a*	1,595	5.9
685	0.68 *a*	1,700	6.8
740	0.9	1,810	7.5
850	1.3	1,865	7.8
955	1.6	2,070	8.7
1,060	2.3	2,300	9.6
1,170	2.9	2,610	10.9
1,275	3.6	.....	.....

a Calculated from observations on water gage. Temperature approximately 20° C.

Vacuum produced by agitation. In the apparatus described in the preceding paragraph an opening in the back of one of the beater blades, near the tip, was connected to a vacuum gage by a conduit within the blade and by a hollow shaft with a stuffing box at the top. Pressures were read at different speeds with the results given in Table 15. At the higher speeds the vacua recorded were well below those actually existing, because of the fact that air coming out of solution behind the blades broke the vacuum by passing into the hole in the beater arm.

Effect of agitation on froth formation is shown in Table 16. The critical speed for the Gabbett laboratory apparatus at approximately ±30° C. lies between 310 and 380 r.p.m., but at this speed the rate of precipitation of gas was so slow that 75 min. was required for frothing to start. At 380 to 420 r.p.m. fair concentration was attainable in 70 min., but at 40 min. it had not started. Compare these results with those in tests 10 to 13, representing the normal speed range for this machine. The speed at which froth production begins corresponds with that at which gas precipitation begins in the square glass jar machine of corresponding size.

Table 16. Effect of agitation on froth formation in agitation-froth process

Test number	Impeller, r.p.m.	Duration, min.	Temperature, deg. C.	Froth, in.	Segregation of sulphide *a*
1.....	170 to 235	75	34 to 30	0	0
2.....	265 to 320	75	32 to 29.5	0	Very slight.
3.....	310 to 320	15	31 to 30	0	Slight.
3 con'd.	310 to 370	30	31 to 29	0	Do.
3 con'd.	310 to 370	45	31 to 28.5	0	Slightly increased.
3 con'd.	310 to 370	60	31 to 28	0	Do.
3 con'd.	310 to 380	75	31 to 27.5	1/4	Partial.
4.....	380 to 390	25	31 to 30.5	0	Very slight.
4 con'd.	380 to 390	40	31 to 30	0	Do.
4 con'd.	380 to 400	55	30 to 29.5	3/16	Partial.
4 con'd.	380 to 420	70	29.5 to 29	1/2	Fair.
5.....	455 to 480	10	28	0	Slight.
5 con'd.	455 to 500	20	28	1/16 scum	Partial.
5 con'd.	455 to 500	30	28	3/8	Fair.
6.....	540 to 590	25	28	1/4	Do.
7.....	680 to 710	20	27.5	1/2	Do.
8.....	700 to 720	18	29	1/2	Do.
9.....	835 to 850	11	28	1/2	Do.
10.....	900 to 940	7	28.5	1/2	Do.
11.....	1,040 to 1,100	6	28	5/8	Do.
12.....	1,270 to 1,300	3	28	1/2	Good.
13	1,650 to 1,660	2.5	28	3/4	Do.

Laboratory Gabbett mixer (see *Ed. 1, 799*). Zinc ore, 18.7% Zn. 18.8% solids. Oleic acid, 3.0 lb. per ton; H_2SO_4, 36.6 lb. per ton.

a Degree indicated by change in color of settled solids from gray to white and actual appearance of agglomerates.

Minerals Separation machine (Fig. 45), as installed, consisted of a plurality of connecting cells on the same level. Each cell comprised an agitating compartment *a* and froth-separating compartment *b*. The cruciform agitator had blades inclined 45°, and was carried close to the floor on a vertical spindle *c*, driven through enclosed bronze bevel gears from a horizontal line shaft. End thrust was combatted by opposing the gears. Feed was introduced into the first agitating compartment, or passed first through one or more agitating compartments, without froth-separating boxes, for conditioning. Agitated pulp flowed through slot *d* into the froth-separating compartment, entering at a point about 6 in. below the pulp level. Tailing flowed from the froth-separating compartment through pipe *e* into the bottom of the next agitating compartment, under the influence of the pumping effect of the agitator therein. Rate of flow was regulated by means of valve *f* actuated by hand wheel *g*. Froth was removed by revolving scraper *j*. Six to 20 cells in series constituted a unit.

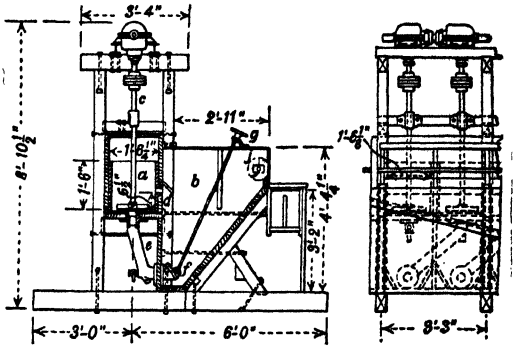

FIG. 45. Minerals Separation 12-in. standard machine.

Low-level machine had a shallower spitzkasten, the bottom of which was but little below the level of the bottom of the agitation chamber, and the overflow lip was at such a level as to maintain a pulp depth of 9 to 12 in. in the agitation chamber when the machine was liquid-filled at rest.

SIZE of a unit was indicated by the distance tip to tip of the impeller blades and the number of cells in series, *e.g.*, 24-in. 12-cell. Usual impeller sizes were 12-, 18-, and 24-in. Time factors ranged from 15 to 30 min. in roughing service at pulp densities of 25 to 45% solids for <48-m. pulps, which works out to 0.3 to 7 tons per cell per hr. POWER CONSUMPTION per cell was 1.5 to 3 hp., 2.5 to 5 hp., and 3.5 to 10 hp. respectively for the three sizes, depending upon speed, specific weight and viscosity of pulp, and the pulp level, whence consumption per ton of ore ranged from 0.8 to 15 hp-hr. and probably averaged between 2 and 4. Power for low-level machines was 60 to 70% that of the standard machine. Peripheral speeds ranged from 1,500 to 2,500 f.p.m. with the average near 1,700 f.p.m. Considerable trouble was experienced from gear wear and breakage.

Reagent consumption is, in general, higher in pulp-body than in bubble-column machines.

Use of agitation-froth machines, except for a few lingering relics, has practically ceased. They were extravagant in power consumption and maintenance and of low capacity. They served a real need in the days of oily collectors of low selectivity. They have today a restricted field for the treatment of ores containing particularly refractory primary slimes where attrition cleaning (Sec. 10) of sandy particles is helpful. Forms of agitation machines that had definitely local use are described in *Ed. 1, 803*.

28. COMBINATION MACHINES

Pneumatic and cascade machines operate by pure unassisted bubble-column or contact action; agitation-froth machines are just as distinctively precipitation-type. Utilization of precipitation selection to aid bubble sweeping in presentation of floatable mineral to the bubble column in high-speed subaeration machines has been discussed (Art. 23). Machines which thus utilize the two types of selection are called combination machines. The Janney machines described below typify two further types.

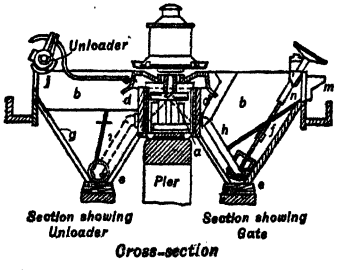

FIG. 46. Janney mechanical machine.

Janney mechanical machine (Fig. 46) shows the form introduced in the mills. It consisted essentially of an agitating compartment *a* with two froth-separating compartments *b*. The agitator shaft was an extension of the spindle of a 6-hp. vertical motor, 570 r.p.m. It carried two four-armed impellers with blades set at 45°. The agitating compartment was circular and contained four baffles extending slightly more than one-half the distance from the bottom toward the top. The arms of the lower impeller were shorter than those of the upper in order to clear the baffles. Feed was introduced through the side of the agitating compartment, near the bottom, by means of a pipe, thrown out through the channels at the top on each side of the agitator compartment, and introduced, by means of the submersion blades *d* slightly below the level of the pulp

in the froth-separating compartments. In general, several machines were installed in series on successively lower levels. For detail of pulp circulation see *Ed. 1*.

Five to 15 cells comprised a unit. SIZE was indicated by the diameter of the agitation chamber and the number of cells in series. Usual peripheral SPEED was 3,600 f.p.m. POWER CONSUMPTION of a 24-in. machine was approximately 6 hp. per agitator. CAPACITIES reported on <48-m. pulps at 20 to 25% solids ranged from 25 to 60 tons per cell per 24 hr.

The concentrating action in the agitation chamber of this machine is pure and highly efficient selective gas precipitation. The discharge into the spitzkasten aerates the pulp therein by cascade action and the introduced air sweeps up pulp and starts bubble-column action, particularly at the rear of the spitzkasten. This is rarely a happy condition in the operation for the reason that it tends to unload the floatable mineral from the air-water interface where it is tightly held to a liquid-liquid interface with much smaller supporting forces, and then, as the froth layer moves toward the overflow lip the supply of air is insufficient to maintain the bubble-column action and the loosely held material showers down into the spitzkasten and must be returned to an agitating box in order to be picked up again. The Janney laboratory machine, because of its smaller size, has much less cascade action and was much more efficient than the mill machine.

Janney mechanical-air machine utilized pulp-body concentration by the agitation-froth method and bubble-column action by pneumatic and cascade means. This combination of processes was effected by placing air baskets in the froth-separating compartments of a Janney mechanical cell. See *Ed. 1* for detailed description. CAPACITY of a 24-in., 5-cell machine on siliceous ore in a pulp containing 20 to 25% solids was 150 to 200 tons per 24 hr. POWER CONSUMPTION per agitator was 6 to 7 hp. AIR CONSUMPTION per square foot of air basket was from 5 to 10 cu. ft. of free air per min. at 4 to 5 lb. pressure, corresponding to an additional power of 5 to 8 hp. per machine.

Final separation in this machine is done by bubble-column action. The precipitation selection in the agitating compartment serves simply to hasten the arrival of floatable material at the bubble column. This, however, has secondary effects. It decreases the burden of pulp sweeping on the air rising to the bubble column; it makes the bubble-column feed effectively (although not by assay) of higher grade than it would be in a straight pneumatic cell, it reduces the amount of bubble-column air required and, by reduction in the depth of pulp body necessary (because floatable particles are carried to the column by the precipitated bubbles), it reduces the pulp back pressure and blower power consumption.

29. DESIGN OF FLOTATION MACHINES

The aims in design are high recovery, high grade of concentrate, and economy of installation and operation. The essential functions of a flotation machine are to effect attachment of floatable particles at an interface and thereafter to lead attached and unattached particles to different discharge ports. Good design is that which brings about the performance of these functions in such a way as to satisfy the above aims.

Recovery is dependent on many other factors than the machine. From the machine standpoint alone, however, it must be borne in mind that good recovery cannot be effected, no matter how efficiently all other steps of the process have been carried out, unless a flotable particle becomes attached to the separating interface and is maintained attached until it passes through its discharge port. Furthermore, since attachment to the separating interface is never immediate for every suitably conditioned particle and never permanent for all particles once attached, attainment of high recovery requires that floatable particles be afforded repeated opportunities for contact and that, contact having been once effected, the mineral-bearing interface be moved as rapidly as possible to the concentrate-discharge port, and be protected in such travel from strains and shocks that tend to break the contact. It follows also that the apparatus should be designed for repeated recirculation of particles through the air-swept zone; this is attained both by recirculation means within single compartments or cells and by multiplication of such compartments in series.

At CLIMAX (*153 A 588*) recovery was raised 1% by placing 30 Weinig cells in series as against 3 @ 10-cell machines in parallel. E. W. Engelman reports that at UTAH the capacity for a given recovery of 16 cells in series was 1,000 t.p.d. while the same cells in 2 @ 8-cell blocks in parallel could treat only 800 t.p.d.

Grade of concentrate is dependent, after given suitable pulp preparation, upon prevention of mechanical entrapment of gangue particles in the interfacial structure, and rejection of such particles as become entrapped prior to discharge of the mineral-bearing interface from the machine. The fundamental demands here are just the reverse of those of the preceding paragraph; they entail impeding, or at least not encouraging, movement of particles toward the selecting zone, and affording every opportunity for particles in the zone to get out.

Economy of installation and operation requires high capacity, low power consumption, ease of operation (low attendance requirements), and good mechanical design (low maintenance). Additionally the coarser the feed that can be handled, the less the amount that must be expended for grinding beyond that required to free the mineral species.

Elements of design common to all machines are: (1) transport of particles to the zone of selection; (2) formation and conformation of the selecting zone; (3) separation, including movement of separated products to the discharge ports; (4) recirculation of unfinished material; (5) utilization of machine volume; (6) mechanical features. The incidence of these factors differs according to the selecting interface employed and to the method of

effecting attachment thereto, *i.e.*, whether by contact or precipitation. Consideration is easiest if the various classes of machines are considered separately.

Design of Bubble-Column Machines

Selecting zone is the bubble column. It must be supported laterally and at the bottom. Its capacity depends, all other things being equal, on the interfacial area that it contains. This is determined by its over-all volume and by the size of the constituent bubbles. Height of column and rate of bubble rise determine time available for separation of any given mass of pulp presented to a given horizontal area at the bottom; barring inoperatively restricted air supply which produces a bubble-rising rate so low that floatable mineral can fall back into the pulp after it has made contact with and become attached to a bubble, and barring overloading and local breakdown, particles once attached to a bubble tend to be carried to the top of the column. Consequently depth of column and rising rates within the operative range affect only grade of concentrate. Horizontal extent of column determines the amount of pulp that must be treated per unit volume of column for a given depth with a given feed rate or, conversely, the amount of feed that may be presented to the column per unit of time and yet permit the required time to make the desired concentrate grade in the overlying volume. In other words, requirements as to concentrate grade set column depth for a given rate of bubble rise; recovery requirements set horizontal column area for a given capacity and grade. In general, high-grade feeds require less air than low-grade; more air is, therefore, required in scavengers than in roughers.

Transport to selecting zone. The bubble column in all commercial machines excluding, perhaps, that at the back of a Janney mechanical-air machine (Art. 28) rests upon the body of pulp undergoing treatment. Transport of feed to the column is effected by sweeping pulp upward from this body into the column in minute masses held around the bubble by viscosity.

Gaudin (*F 92*) states that the liquid pulp in an operating pneumatic machine is expanded 15 to 35% by the air contained at any instant. Taking 25% as an average and 2 mm. as average bubble diameter, and assuming rectangular-packing arrangement of the rising bubbles (assumption of diagonal packing changes the calculation but little), the average face-to-face spacing of bubbles in any plane (closest approach if the rise were vertical) would be about 1 mm., the maximum (diagonal) spacing would be about 2.5 mm., and the average horizontal cross-sectional area occupied by bubbles would be about 35% of the total. It will thus be seen that 35% of the cell cross-section is swept by each layer of rising bubbles. Since the velocity of rise of 2-mm. bubbles is about 150 mm. per sec., disregarding water currents, the number of rising-bubble layers per sec. is about 50, which means that each horizontal sheet of pulp in the cell is completely swept through by bubbles between 17 and 18 times per sec. While not too great dependence can be placed on an approximation of this character, it does serve to explain, since each rising bubble carries a sheath of pulp upward into the bubble column, how the pulp is raised into the separating zone.

One test of the effectiveness of air sweeping is the quantity of air per minute per cubic foot of cell volume; if this is low, sweeping is comparatively inefficient. Transport is aided by directing pulp flow toward the under side of the bubble column. To sweep the pulp effectively it is essential that as large a proportion thereof as possible shall be undergoing sweeping at any given moment. Unswept pulp fills dead cell volume so far as concentration is concerned.

Mat-type pneumatic cells with fixed bottom-positioned mats and vertical side walls (Fig. 47, item *A*) maintain the greatest proportion of pulp in sweeping position of any of the bubble-column machines, but lose sweeping effectiveness because of large-sized bubbles, loss of effective mat surface through clogging of mats and sand sedimentation, and eddy currents which produce actual downward movement of bubbles relative to the cell walls in some parts of the cell.

Rotating-mat V-type cell (Fig. 47, item *B*) sweeps a large proportion of the total pulp. It does not suffer serious loss from sedimentation, but does have a tendency to boil at the center by reason of greater air supply at this point owing to lower back pressure; the pulp below the center of the air tube is substantially non-air-swept. Air bubbles are of the same size as in the stationary-mat cells.

Cascade machines (Fig. 47, item *C*) are the least efficient from the standpoint of air sweeping. The air supply itself is relatively inadequate, the dispersion is low, and considerable cell volume is sacrificed in baffling *a* to prevent short-circuiting of pulp from feed to discharge.

Air-lift cells (Fig. 47, items *D*, *E*) use proportionately less of their volume for air sweeping than either the mat-type pneumatic or cascade cells. On the other hand the air is more finely and completely dispersed and the air-swept zone is more quiescent than in any other type of bubble-column cell. The effect of bubble size is illustrated strikingly by comparison of the two types of air-lift cells. A given mass of air remains in the deep-cell air lift (*E*) for a period at least twice as long as in the standard-cell lift. The degree of agitation in the lift is about the same in both. Hence the dispersion of air in the pulp cascaded to the air-swept zone is much finer in the deep cell and the volume held is also greater. The resulting capacity of the deep cell per foot of length is 5 to 6 times as great as that of a shallow cell

of the same width while power consumption shows no proportionate increase (Art. 21). Not all of the increased efficiency is due, however, to more effective air-sweeping; no small part arises from the increased selecting area in the bubble column incident to the decrease in size of bubbles going to it.

Subaeration machines show a great variety in air-swept volume and in effectiveness of sweeping. A simple lift-type impeller with underfeed of air as shown in item *F* would give a central air-swept cone as shown, but no bubble column could be maintained above it because of boiling at the center due to both the mechanical lift and large air bubbles. Various bafflings are, therefore, employed to protect the bubble column and to break down large bubbles; each of these has its effect on the air-swept volume. Fig. 47, item *G*, shows the effect of reversing the impeller in *F* and baffling above with a honeycomb baffle. The air-swept volume is substantially unchanged, but the surface will maintain a bubble column, if the cell is made deep enough. In item *H* the impeller is top-shrouded, which tends to protect the area above it from disturbance. Inwardly projecting baffles from the side break up swirl and increase agitation in the zone directly around the impeller. Downwardly projecting straight blades, which may be multiplied and variously staggered (see Weinig, Geco, Agitair, Art. 23) both increase agitation directly in the impeller zone and decrease unidirectional flow (center to walls). The air-swept volume is not substantially increased, but the effectiveness of the air itself is greatly increased by reason of the finer dispersion. The double-shrouded impeller of the M.S. American-type cell gives the same air-swept volume, but is less effective in dispersion. In the form shown in item *I* (Denver) the impeller is bottom-shrouded and a bladed shroud is fixed in place above it. Baffling is of the same general type as in item *H*. Air-swept volume is substantially unchanged, dispersion is somewhat finer owing to the shear set up between the fixed and moving shroud blades. The form shown in item *J* (Fagergren) has the greatest percentage of aerated volume of any of the subaeration cells. This is attained by greatly increasing both the actual depth of the impeller and the proportionate depth referred to the cell. This increase is made possible by increasing horizontal cross-section proportionately to the impeller diameter, and by breaking up unidirectional currents by means of a cylindrical grid surrounding the impeller. Excellent dispersion is attained by using high peripheral speeds.

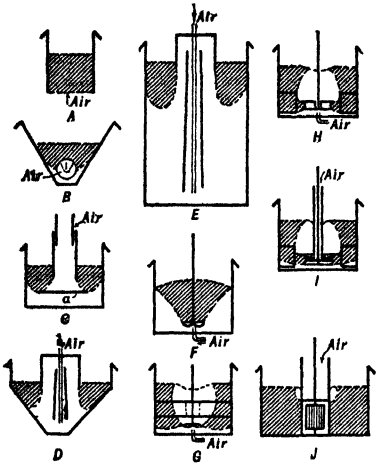

FIG. 47. Air-swept volume in bubble-column cells.

The smaller the diameter of the impeller relative to the horizontal dimensions of the cell the larger the air-swept volume, all other things being equal. But small impellers mean small blade surface and small volumes of highly agitated material, so that the volume of finely dispersed air is correspondingly small unless compensating changes are made elsewhere.

Transport of floatable mineral is aided in forms *H*, *I*, and *J* by running the impellers at such speeds that substantial vacua are formed behind the propeller blades and their equivalents (see Art. 27).

Separation is the entire operation of causing selected and rejected particles to follow divergent paths. It involves vertical movement of particles in the bubble column and horizontal movement of froth and pulp to and through their respective ports and conduits. It is the operation at which control is aimed, and is the most complicated of the elements of design.

The ideal bubble column is one containing sufficient separating surface to insure room for contact for all of the floatable mineral brought to it during the time interval that such mineral must spend in the column to permit separation; loose enough in texture at the bottom to permit ready egress of the large volume of reject that must be dropped out; and thin-walled enough at the top to offer viscous resistance to the fall of selected mineral in addition to retardation due to interfacial tension, in order that the selected load may be held up long enough to be overflowed. Such a column should be lively enough (have sufficient bubble coalescence) to shake out reject, but this is a matter of frothing agent rather than of machine structure. Otherwise the column should be as free as possible of strains, *e.g.*, disturbance by impeller shaft. Depth of column and rate of bubble rise should be readily regulable, if possible without changing the time available for air-sweeping of pulp.

Froth overflow may be by gravity, or the froth may be scraped off, or it may be crowded off, which is to say pushed off by rising air. In any case more or less horizontal movement occurs and external strain incident to the movement is imposed. The path may be extended by sloping the wall beneath the overflow lip outwardly, in which case the air supply to the extended path is diminished and it may be cut off entirely by suitable baffling. Any such extended path increases separating time, and with diminished air supply upsets the rising bubble-falling particle equilibrium in the column in favor of fall so that the slower

rising stratum, consisting usually of coarse and locked-middling grains, falls out. The strains incident to horizontal flow also shake down some solid.

A method of gaining separating time without losing rising-bubble support that is sometimes practiced with freely flowing froths in long cells with normally full-length overflows is to build up the sides for a greater or less distance from the tailing-discharge end toward the head end, thus forcing tail-end low-grade froth to flow back over richer pulp in order to reach its overflow port. The result is usually a higher average grade of concentrate without change in tailing assay.

Tailing flow is normally transverse to froth flow. In trough-type machines without transverse partitions, usually pneumatic or cascade types, pulp flow is commonly in the form of a confused double spiral around parallel horizontal axes symmetrically spaced on both sides of the longitudinal center plane of the trough. The tighter the spiral and the more rapid the peripheral rate the more frequently the pulp is brought into the air-swept zone.

Tank should be so proportioned and conformed as to return settled material to the air-swept zone as rapidly as possible. This is usually accomplished by sloping the tank bottom toward the point of air introduction.

Subaeration machines are usually partitioned transversely. In some of these pulp flow is simply undirected displacement through large slots in the partition walls, the cell circulation being depended upon to move pulp into the air-swept zone and to return it sufficiently often to insure eventual transport to the bubble column. Most of the machines which depend upon precipitation levitation to aid transport lead the stream entering a cell directly to the agitator in order to insure at least one passage of all pulp through the pressure-reduction zone.

Tailing-outlet ports are preferably weirs, since these are less readily clogged than submerged ports and flow across them is more easily regulated. They must, however, be supplemented by sand-relief ports unless feed is all <48-m. Compartmented cells may have weir discharges from cell to cell, this arrangement permitting control of pulp level in individual cells.

Malozemoff and Ramsey (*142 #3 J 45*) point out that machines without transverse partitions are easier to control, consume less power, are easier of access, have lower maintenance costs, and are cheaper to build. It must, however, be borne in mind that these economies are gained at the expense of reduced circulation of pulp through the air-swept zone and that unless there is compensating increase in efficiency therein, the machine must be increased in length or higher tailing will result.

Recirculation has two facets, *viz.*, (1) return of pulp to the air-swept zone and thence to the bubble column, and (2) return of low-grade overflow (middling) from the tail end of the cell to an earlier point. The first type has been discussed in considering flow of pulp, except that in some cells (Fagergren, M.S. countercurrent, Janney) attempts are made to direct recirculation to a certain extent.

Middling return can be effected by gravity flow in trough-type subaeration machines, whether compartmented or not, if the cell bottom is substantially level (see Denver, Art. 23).

Mechanical features should be considered first from the standpoint of how well they serve the primary functions of making recovery and grade of concentrate, secondly as to continuity and ease of operation, and finally as to the supply and labor costs involved in maintenance. Apart from the questions of air-sweeping, protection of bubble column, and direction of separating flows, provision must be made to prevent sanding up. This involves elimination of dead spots in the pulp path, arrangement of pulp passages so that incipient constrictions tend to increase pulp velocity and so increase carrying capacity as to scour out the settled material, and provision of sand bleeders which short-circuit settled material directly to a zone of greater agitation. It is important also to so design that a cell can be restarted after an unexpected shutdown without emptying. This is not difficult to arrange in machines operating with extraneous air supply; with other machines it is wise to provide for piping high-pressure flushing water to impeller zones, closed pulp passages, sand bleeders, and the like. Such entry points, and air-entry pipes also, should, so far as possible, point downward. All conduits should be as short as possible, particularly with heavy ores. Rubber pinch tips, which insure against sand entry, are now available (Art. 21).

Impellers should be designed to serve the purposes of effecting the desired presentation and representation of pulp to the bubble column, and of fine dissemination of air, with minimum wear and consumption of power. The rules of design are not established. Simple propulsion and circulation would seem to be best effected by upright radial blades, the propulsive effect increasing with height and length, but not directly with number. Dissemination of air is increased by placing baffling close to the impeller and by increasing the number of blades and baffles. Beyond these almost obvious considerations, design is wholly a matter of trial and error.

Rubber and rubber-covered impellers have proved consistently economical. At UTAH the covered impellers in Fagergren machines last 4 times as long and cost only twice as much new as the uncovered.

IMPELLER SHAFTS should be of large diameter, carried in long bearings, preferably of ball or roller types, mounted on a sturdy framework. V-belt DRIVES are superior to gears. Efficient protection against pulp splash and lubricant drip should be provided. With coarse or abrasive pulps, the impellers and all baffles, liners, and other stationary parts that come in contact with swiftly moving pulp should be rubber-covered. This applies also to down-pipes in air-lift cells handling dense pulps. Valves and sliding gates or weirs handling sandy pulps are anathema; when unavoidable they should be moved by heavy hardened-steel stems with power threads, well protected from splash.

Power of top-shrouded 45° impellers was tested by Read (*91 Aa 377*) who found that with constant peripheral speed the power draft increased with impeller diameter (using 15- to 24-in. impellers in a 3×3-ft. tank with different submersions) but that the volume of air did not increase proportionately, so that the smaller impellers gave more aeration per unit of power. Increasing submersion of the impeller from 28 to 40 in. increased power consumption about 12% with the 15-in. impeller and about 9% with the 24-in., but aeration decreased from 17 c.f.m. to 9.5 c.f.m. with the 15-in. impeller (44%) and with the 24-in. impeller from 24.5 cu. ft. to 12.5 (49%) so that the loss in aeration per unit of power with increase in submersion was serious. Increase in power consumed with increase in peripheral speed was at the rate of about 0.3 kw. per 100 ft. peripheral for water and about twice this figure for pulp of 1.5 sp. gr. With an 18-in. impeller at 322 r.p.m. and 47-in. submersion, power increased from 2 kw. per spindle at 1.0 gravity (water) to 3 kw. per spindle at a pulp gravity of 1.54 by substantially equal increments. Fahrenwald (*Pamphlet 64 IBMG*) obtained similar results in a miniature cell; he also estimated the extent of subdivision of the air introduced and the corresponding area of new surface, and, from known surface tensions, calculated that the efficiency of his laboratory apparatus as a producer of new surface was of the order of 0.3%.

Rose (*A TP 1702*) compared energy inputs per cu. ft. of pulp volume with cell capacity for 12 semi-random plant performances. A summary of the data follows:

Machine *a*.....	1	5E	3D	2 *d*	5A	4	3B *e*	3C	3A *e*	5C	5D	5B
Capacity *b*.....	2.54	2.45	1.71	1.37	1.20	0.76	0.70	0.66	0.63	0.53	0.53	0.21
Power *c*.....	0.16	0.17	0.11	0.13	0.10	0.09	0.04	0.09	0.06	0.10	0.09	0.05

a Numbers refer to 5 different plants. Cells 1, 5A, and 5B were matless type; cell 2 was a sub-aeration type with some blower air; cells 3A, 3B, 3C were of the same general type as 2 but of a different make; cells 3D, 4, 5C, and 5D were completely self-aerating; cell 5E was a self-aerating cell of a different make.

b Dry tons new feed per 24 hr. per cu. ft. of cell volume.

c Hp. per cu. ft. of cell volume.

d Feed 6.4% >28-m., 33% <200-m.; 50% solids in pulp.

e Feed 87% <200-m.

Feeds to the 12 cells ranged from 20 to 50% solids, specific gravities of the pulps from 1.15 to 1.52, percentages <200-m. from 33 to 87, and machine depths from 24 to 114 in.

The data of Read and of Fahrenwald show that the proportion of total power input required for pulp suspension is a function both of depth of pulp and of pulp density. Rose points out (notes *d* and *e* of correlation) that particle size is also a factor in the energy required for suspension, which is, of course, common experience. Recirculation of pulp through the air-swept zone consumes power, and differs in extent in different machines. Hence the fact that except in the instances in which particle size and pulp density were grossly out of line, energy consumption and machine capacity to (presumably) a common base of metallurgical performance varied directly, points to the conclusions that modern flotation machines have reached a substantially common level of design so far as effectiveness in pulp suspension and recirculation are concerned, that the five plants reported had reached a common level of acceptance of metallurgical recovery, and that the differences in the machines employed resolves itself into one of intensity of work done in dissemination of air per unit volume of pulp undergoing treatment. The necessity for fine dissemination has long been recognized. The trend from pneumatic toward subaeration machines, and the trend in design of subaeration machines toward straight-bladed impellers and shrouds and close spacing of the two are convincing evidence of this recognition. The Rose correlation is a quantification of the principle, and confirmation of the correctness of the line of attack from a power standpoint. Whether the trend is economic requires consideration of maintenance costs and scrutiny of the metallurgical results; these latter the correlation implies to have been equally efficient.

Design of agitation-froth machines differs from that of bubble-column machines in two important respects, *viz.*, (1) the selecting zone is the zone of agitation, and (2) the separating zone is the quiescent pulp after agitation. The only part of the zone of agitation that is effective for selection is the relatively minute volume of pulp directly behind the outer part of the impeller blade at any given instant. Since pulp cannot be held in this position for more than a very short interval at a time, the agitator and the agitating compartment should be so designed as to lead pulp again and again into the active position, to enlarge the active zone and to make the tendency to precipitate gas therein as great as possible.

30. TABLE FLOTATION

This process, also called AGGLOMERATE TABLING, was discovered by Cattermole in the early 1900's, rediscovered by Christensen in 1921, and patented by Chapman and Little-

ford (*U. S. pat. 1,968,008*) in 1934. The essential elements of the operation are: (1) elimination of slime and use of a sandy feed of not too great size or size range, (2) collector-coating in a thick pulp, preferably in a manner that will introduce air, (3) dilution under conditions that will introduce more air, (4) treatment in the normal way in gravity-separation apparatus, preferably a shaking table.

Desliming is done in the usual apparatus (Sec. 8), the particular type of deslimer chosen depending upon the character of the slime. If slime coats the valuable mineral and prevents collector-coating, or coats gangue and induces collector-coating, desliming must be thorough, and will generally follow conditioning with a dispersant (see Art. 8). If the slime does not coat solids appreciably, much less thorough desliming is necessary, since it is, in general, the kinds of slime that do such coating that collect in the oil-water interfaces and hinder the oil from coating the solid to be floated.

Size of feed. The maximum size of grain (sp. gr. 3) that has been table-floated commercially is about 1/8-in. The usual maximum is 6- to 10-m. Sand as fine as 200-m. can be handled but table capacities are low on sands <65-m., whether treated alone or in admixture with coarser material. Best results are claimed (*IC 3247*) when the ratio of maximum to minimum grain diameters in the feed is 2.8 : 1.

Collector-coating in a thick pulp is advantageous from the standpoint of economy of collector, conditioner capacity, and power consumption, primarily because it keeps the oil close to the solid particles at all times, thus increasing the probability of contacts, and because the rubbing of the particles together smears out adhering oil droplets into the thin films that are essential for bubble attachment. In operations in which reaction with an earth metal is involved in collector-coating, a preliminary treat with alkali, preferably followed by a second desliming, quickens collector-coating and reduces the quantities of collector required.

Aeration during collector-coating in thick pulps is desirable. The introduced air bubbles are pressed against the oil-coated particles and attached to them and then, because of the large contact angles (>90°), leave behind small residual bubbles when they are subsequently broken away by the continued agitation. The result is that the oil-coated particles become frosted, as it were, with a coating of very small, strongly adherent bubbles. Other and larger bubbles also become attached interiorly of two or more oiled particles, cementing them together into agglomerates, and being themselves more or less protected against dislodgment by their interior positions.

Dilution is and should be effected by dropping the stream of thick pulp into the dilution water, as in the feed box or onto the deck of a shaking table. The result is that each particle or droplet of pulp carries down into the water a blob of air, a part of which at once coalesces with the air bubbles frosting the particles, thus tending to produce more agglomerates.

Separation is effected because the air-mineral agglomerates are larger and specifically lighter than the nonagglomerated material. In general, the degree of levitation is insufficient to cause actual flotation in water. But reasonable separation can be made in a rising-current classifier or in a lively jig bed, and excellent high-capacity separation is made on shaking tables. On the last apparatus an additional mechanism of separation is utilized in the fact that as the levitated particles cross the riffle tops in flowing toward the normal tailing side of the table, some of them break through the water surface and are held thereon as a skin float and carried off rapidly by the surface water. The proportion thus separated increases with decrease in the volume of cross water.

Ordinary shaking tables (Sec. 11) are used, provision being made to guard, as far as possible, against high wear due to the heavy loads of coarse pulp. The oil tends to coat and form gum deposits on lineoleum decks. Masonite decks at SOUTHERN PHOSPHATE (*143 #2 J 80*) were found to resist gumming and not to warp.

Conveyor separator. At CORONET PHOSPHATE CO. (*143 #12 J 51*) conveyor belts are substituted for shaking tables as the separating means. Aeration is effected by jetting water into the pulp along the center of the belt, and agglomerates flow to and over the edge. Diagonal scrapers turn the pulp over during the run and heap up a ridge along the centerline of the belt. Rod scrapers in V-shape turn over the roughed feed for scavenging toward the tail end of the belt. Rough concentrate has to be cleaned. A 30-in. × 70-ft. level belt at 80 f.p.m. roughs 10 to 17 tons per hr. of deslimed sand containing 25% solids. The belt has straight idlers at 1 ft. centers. Two lines of pipe, 6 in. apart along the centerline, 5 in. above the belt, drilled at 2-in. intervals with 3/32-in. holes, supply jet water. Blade scrapers are used for 40 of the 70-ft. length, the V-rod scrapers the balance. A 60-in. cleaner belt, 70 ft. long, runs at 65 f.p.m. and serves the three roughers. It has 4 spray lines. RECOVERY is said to be 85 to 90%; grade of concentrate on a pilot test was 74.9% B.P.L. Three men are required for operation of the plant, including desliming classifiers, and a 20-ft. log washer and 4×30-ft. inside-spiraled drum used in series for conditioning.

Screen separation. At SWIFT & CO. (*43 #5 RP 27*) 20~48-m. phosphate rock suitably conditioned is run over fixed, submerged screens (18-m. aperture), inclined 50 to 55°, to remove the coarse agglomerates; undersize is sent to tables for separation.

Quantities of collector employed in table flotation are larger than in froth flotation, amounting, for nonmetallic salt-type minerals, to 0.5 to 1 lb. of fatty acid and 2 to 4 lb. upward of petroleum oil per ton of feed. Circulation of water in Florida phosphate practice tends to reduce the quantities to 50 to 70% of those required in parallel operations

with fresh water. Despite high reagent costs, however, table flotation is cheaper than froth flotation because of savings in grinding, power, and installation.

Applicability. Table flotation is indicated when the spread in specific gravity between valuable mineral and gangue is too small for gravity tabling (Sec. 11, Art. 15), severance is effected at sand sizes, slimes can be discarded or otherwise treated, and subsequent use (and consequent value of concentrate) are unaffected by the oil coating.

OPERATION

Flotation is a chemical process. It follows that successful operation requires knowledge and control of the composition of the entering ingredients, their reactions and reaction rates. With this basic aim the definable elements of control are: ore, water, reagents, machine, feed rate, pulp density, feed size, temperature.

31. ORE

The genesis of ores constituting flotation feed and the story told about them by the microscope are of vital importance to the flotation operator, because not only may the behavior of a given particle in the cell be determined entirely by the chemical constitution of a very small part of its surface, but also the behavior of the ore as a whole may be influenced to a considerable extent by the presence of a gravimetrically minor constituent.

Primary sulphide ores are normally clean, *i.e.*, free of clayey and micaceous constituents; the valuable sulphide may be coarse or extremely fine grained, and separate or finely intergrown with other sulphide. In any case it can usually be broken free into grains the surfaces of which are of the same composition as the interior. The extent of grinding necessary to do this can be determined by microscopic examination of representative specimens by reflected light (Sec. 19, Art. 9).

Secondary sulphides, particularly those near the transition zone, are almost invariably coated by other sulphides at the grain boundaries and along cracks. Pyrite, for example, is usually a core mineral to chalcocite and covellite (Sec. 5, Fig. 1). It is normally impossible to separate such coatings from the underlying mineral, with the result that the coated mineral tends to float as though it had throughout the composition of the coating.

Oxidized metallic ores not only contain their valuable metallic constituents in a form that is usually soft and crumbling, but all of the ore ingredients are finer, more intermixed, more soluble, and more complex chemically than are the sulphide ores. As a result the pulp liquor is an extremely complicated system, ion concentrations are high, reaction rates high, reagent consumptions relatively great, and reagent reactions more difficult to control. On top of all this is piled the mechanical slime problem which includes particle coating by slimes, coating of oily collectors and bubble walls by slime, consequent exclusion of granular material from the froth, and probably a host of as yet unidentified further interferences.

Character of the ore delivered to the mill is not an uncontrollable element, despite the tendency on the part of mine operators to so consider it. Ore is variable enough, in all conscience, even as it occurs in large ore bodies; when it comes from small scattered bodies, the variations from place to place in the mine are frequently tremendous. In many mining operations the history of the ore from the time it is broken at the face until it reaches the flotation cell likewise constitutes an important variable, since from one face it may get to the flotation plant in a few hours while from another the duration of the trip is weeks, months, or even years; at one face it may start its trip wet or it may get wet on the trip, while from another it starts dry and comes through dry; one batch may receive the leachings from old mine timbers or come to the mill admixed with timber; another may be subject to excessive contamination by lubricant; one part of the mine may be moist and hot, another cool and dry. All of these things affect the chemical composition of the flotation feed in ways that change its floatability. Hence, if operation is to be optimum, steps must be taken to smooth out the suddenness of changes in composition, means should be devised to indicate their occurrence and character, and the operating changes necessary for accommodation should be determined and applied.

The best arrangement from the mill standpoint is probably the maintenance of a number of underground working faces with constant proportionate draws therefrom to the haulage system. This starts the mixing process early. The larger the storage provided between the mine and the flotation plant, the finer the material therein, the better it is bedded; and the greater the number of draw points, the more thorough the ultimate mixing will be and, consequently, the more uniform the flotation feed. The shorter the elapsed

time between mining and floating, the smaller the quantity of mine water accidentally admixed, the less the amount of accidental contaminant introduced, the better the flotation results will be. It will pay mine management to listen to mill complaints about ore, and compare asserted economies in mining without regard to mill problems with resultant mill costs and losses.

When the ore coming to the mill varies so greatly that radically different methods must be used on different lots, segregation and separate treatment are indicated. Occasionally such a difference exists between the hard and soft parts of an ore; in such case the practice is to separate these as early as possible by gravitational or sizing means and treat them separately.

High-grade feed makes for easy operation on account of the heavy loading of the bubbles and the consequent great stability of the froth. It is easier to make high-grade concentrate with high-grade feed, probably on account of the tendency of the mineral to crowd gangue from the bubble surfaces mechanically. On the other hand, the tailing from the treatment of high-grade feed will almost invariably assay higher than that obtained from a low-grade feed of equal general floatability. It may happen, however, as is the case with free-milling nonsulphide gold ores, that the amount of metal present is insufficient to stabilize a highly selective froth, in which case flotation is difficult.

Floatability of minerals. There is no great difference, from an operating standpoint, in floatability of the sulphides of different metals, assuming proper conditioning and choice of a suitable collector. The same is probably true of the nonsulphides, but knowledge of suitable reagents and their use is less well established. The principal differences of importance lie in the gangue minerals. An ore containing a large amount of clayey material, *i.e.*, PRIMARY SLIME, is invariably more difficult to float than an ore with a clean siliceous gangue, and different methods of treatment may have to be employed. In some mills primary slimes are separated from the granular material by classification and treated separately (Sec. 2, Figs. 31 and 36). Control of feed to keep the primary-slime content within proper limits is now the practice at all mills where such control is possible; fairly elaborate methods of mixing in the mill bins are practiced to attain this end.

32. WATER SUPPLY

The water should be as pure as possible. When contaminated water must be used, its composition should be maintained as uniform as possible. If reclaimed water is used, it must be watched to guard against building up of harmful ingredients. These are, in general order of decreasing objectionableness, organic colloidal matter, oil, frothing agents, heavy-metal salts, alkaline-earth salts, salts of the alkali metals.

Organic colloidal matter is normally introduced with new water in tropical climates. It is a general depressant, making for clean concentrate, but at the same time lowering recovery. It tends to adsorb on slimes and, in general, to flocculate them. Hence one way to eliminate it is to admix such new water with mill tailing and reclaim it from the tailing pond.

Oil, whether from lubricants or other sources, is almost never sufficiently free of fatty-acid contamination to be without chemical collecting power. This is exerted on sulphides generally and on nonmetallic minerals which contain or are activated by heavy metals and alkaline earths. Oil also tends to stiffen froths. It is usually introduced into water supply in objectionable quantities from surface runoff; the remedy is, of course, to keep this out of the mill supply.

Frothing agents are not consumed to any great extent in the flotation operation except in so far as they are lost by evaporation. They concentrate in the froth. Hence if concentrate water is returned to mill supply, there is great danger of building up frothing effect therein to the point that control of frothing through control of the amount of new frother added is lost.

Heavy-metal salts activate both sulphides and gangue minerals, the tendency being to make all minerals float alike. Certain of them also act as depressants in sulphide flotation (see Art. 10, ***Ferrous sulphate***). Fortunately they are rare in most mill-water supplies except those drawn from the mine. They are precipitated to a large extent by alkalis and by the anions of many weak acids, as well as by their activating reactions, hence do not build up in circuit.

Alkaline-earth salts build up badly because of the relatively high solubilities of their sulphates, chlorides, and hydroxides. As already noted, they tend to activate quartz and alkaline silicates. In excessive concentrations they have a depressing effect on sulphides.

At saturation concentrations, which are reached at COPPER CLIFF owing to the large additions of lime necessary to neutralize the sulphuric acid formed by oxidation of pyrrhotite, pyrite, and pent-

landite, they precipitate throughout the circuit and clog pipes, valves, launders, and cell blankets and incrust everything they splash on. No cheap methods of elimination have been devised. For bibliography on zeolite treatment see *RI 3671*. Coghill and Clemmer (*112 A 452*) assert that hard water in soap flotation is less harmful at high pulp temperatures. Clemmer *et al.* (*153 A 547*) found that in using cationic collectors the hardness of the water was unimportant, but this cannot be taken as universally true with these reagents. Salts of the ALKALI METALS are not particularly harmful.

Sea water can be tolerated as a suspending medium by proper choice of collector and frothing agent; it has been used at a few plants where other sources of water were unduly expensive. It increases corrosion of machine parts.

Change in water supply. Water supply is not normally an operating variable, except in those cases where reclaimed and fresh water are at the disposal of the operator for alternative use. Under such circumstances it is usually found that change from one to the other, in whole or in part, requires corresponding changes in reagent addition. In Arizona, where much of the mill water may be reclaimed from a tailing dam, the water frequently becomes so concentrated in soluble salts, owing to repeated leaching and evaporation, as to have a harmful effect on performance; on the other hand, a heavy rain which dilutes the water in the tailing pond may also have a harmful effect, particularly where the return water is depended upon for some of the flotation agents. In other words, the situation is that after the mill operation has been adjusted to a certain amount of contamination in the water as a regular operating condition anything that disturbs the regular condition is harmful. See also Art. 40.

At TUL MI CHUNG (*33 IMM 3*) the spring floods bring large quantities of claylike solid into the water supply, and so long as this material is present flotation is uncertain and unsatisfactory. Bates (*109 J 552*) notes similar interference with flotation in a Mexican mill. Water from bogs and swamps contains TANNIN and VEGETABLE ACIDS which are ordinarily deleterious. At COCHENOUR WILLANS (*143 #3 J 45*) flotation with lake water deteriorates in winter, probably owing to reduction in oxygen content, since the trouble is remedied by aeration.

It is an interesting commentary on the long-suffering nature of millmen that of some 50 who responded to a question as to the effect of mill water on flotation operation, some of whom reported dissolved salts in quantities as high as 3,000 parts per million, 45 stated that the nature of the water had no effect, one said he took what he could get, and two or three reported that it was all right if it wasn't muddy.

Water treatment may need to be practiced in order to soften (remove Ca and Mg ions from) waters to be used in soap flotation. The usual plant procedure is to add, in succession, lime and soda ash. The lime first precipitates carbonate ion, which holds a certain amount of the Ca and Mg in solution as bicarbonates (temporary hardness). Additional lime precipitates the small amount of $MgCO_3$ still dissolved as hydroxide. Soda ash, by raising the concentration of carbonate ion, next precipitates the Ca present as sulphate and chloride (permanent hardness). Zeolite treatment is now displacing the older method.

33. REAGENTS

Character and action of reagents have been discussed in Arts. 3 to 10. The considerations controlling choice are effectiveness, specificity, stability, ease of handling and addition, and cost per unit weight and per unit of recovery. Quantities differ according to the function and the burden. The alkalis, having multiple functions, usually are added in greatest quantity. High-sulphide ores containing large quantities of iron sulphides form considerable sulphuric acid in the course of the oxidation that they undergo and also load up the pulp with $FeSO_4$, which is a depressant (Art. 8).

Hydroxyl ion. Lime is the cheapest source of hydroxyl ion, producing, as it does, 1 lb. OH per 1.6 lb. CaO; corresponding figures for Na_2CO_3 are 1 lb. per 3.1 lb., and for NaOH, 1 lb. per 2.4 lb. Usual comparative prices for the crude chemicals are: lime, 0.3 to 0.5¢/lb.; soda ash, 1 to 1.5¢/lb.; caustic soda, 2.5¢/lb. As much as 15 lb. of CaO per ton of ore may be required to precipitate the iron, neutralize the acid, and build up excess hydroxyl (raise *p*H) to the point necessary to depress iron minerals; with clean, low-sulphide ores as little as 0.5 to 1 lb. per ton may be sufficient to produce and maintain the *p*H in the optimum range for sulphydrate collectors. When it is desired to float the iron minerals, it is usual to use soda ash (crude sodium carbonate) instead of lime. This buffers the solution at *p*H 8 to 9.5, but this is high enough for most minerals and collectors.

Quantities of collectors. SULPHYDRATE collectors are usually added in amounts ranging from 0.05 to 0.25 lb. per ton of ore. Less of the higher molecular weight homologs is required. The usual quantity of FATTY-ACID collectors is from 0.5 to 1 lb. per ton when used alone and from one-third to one-half these quantities when supplemented by neutral oils. The NEUTRAL OILS, when used with sulphydrates, are usually kept below 0.25 lb.

per ton; when used with fatty acids the quantity may run up to 2 to 3 lb. per ton, particularly in table flotation. Practice with AMINES is not yet established.

Concentration of collector. Since collector-coating with soluble collectors is a precipitation reaction, it follows that concentration of the reacting ion is a factor in its completion to an effective extent. Thus, if a copper xanthate is to be precipitated, the product of the ionic concentrations of copper and xanthate must exceed the solubility product of cuprous xanthate at the particle surface, and this may be reached by adding either copper or xanthate ion to the solution. But since addition of copper ion will tend to consume xanthate ion, by precipitation in the body of the solution rather than at the particle surfaces, xanthate ion should be added. When the mineral to be collected is relatively soluble in water, *e.g.*, anglesite, a high concentration of collector ion is necessary in order to first precipitate all dissolved lead and build up $SO_4^{=}$ concentration and then to cause precipitation of the collector-coating. Economy will usually dictate substantial closure of the surface (see Art. 3) first by cheaper means, *e.g.*, by carbonate, phosphate, or sulphide ion in the case of anglesite, whereupon a smaller concentration of collector ion will serve. Addition of $SO_4^{=}$, to drive back Pb^{++} to the anglesite surface, should also be useful. In general, without such conditioning, the amount of collector ion necessary to add is in proportion to the solubility of the mineral and of the collector-coating itself.

Use of high collector concentrations or overpowerful collectors causes extremely rapid bubble attachment, whether the mechanism be precipitation or contact. This results in premature froth formation, heavy overloading with resubmergence of overloaded clots, and abnormally high persistence of removed froth, all of which are evils from an operating standpoint.

Excess of collector is usually harmful. With soaps it causes over-frothing and a marked decrease in recovery. The increase in frothing is in accord with the recognized fact that the curve for froth volume *vs.* concentration of frother shows a maximum at an intermediate concentration well in excess of that necessary to use in chemical collection; hence when the standard is the latter quantity, excess is on the rising leg of the froth volume-concentration curve. The decrease in recovery is usually attributed to formation of multi-films on the coated particles, which films are either unoriented or, if oriented, present their polar ends toward the water. This is, for such a film, the state of greater stability; it is likewise an orientation which repels rather than invites bubble attachment.

Taylor and Knoll (*112 A 390*) have shown that lead xanthate is soluble in strong solutions of the corresponding alkali xanthate. Bubble attachment decreases with approach to this dissolving concentration and is zero when it is reached.

Excess of oil in soap flotation tends to cause all minerals present to oil and float, the explanation probably being that the gangues are at least lightly resurfaced with heavy- and earth-metal ions (see Art. 7) and that after the completely collector-coated particles are oiled the excess spreads on these lightly coated particles.

Xanthates are always sold and used as the alkali-metal salts. Since the xanthate ion is the active part and experiment has shown that the alkali-metal salts in low concentrations have no effect in flotation, the only difference between, *e.g.*, sodium and potassium xanthates lies in the cost of xanthate ion. SODIUM XANTHATES are cheaper to produce but are less pure than the potassium salts and less stable at high atmospheric temperatures; choice is a matter of experiment.

Aerofloats are not good collectors for pyrite and are often used where depression of the latter is desirable.

Thiocarbanilid differentiates between copper sulphide and pyrite to a greater extent than xanthates; likewise between galena and lead-activated sphalerite. Somewhat the same effect is observed as between Aerofloats and xanthates.

High molecular-weight collectors produce larger contact angles than their lower homologs, and since the levitating effect of a bubble increases with increase in the contact angle, it is usual to add a small amount of higher homolog toward the end of the roughing stage to lift coarse mineral.

Frothing agents are added in amounts equivalent to 0.05 to 0.15 lb. per ton. Excess of frother produces excessive froth, which loses selectivity as the volume increases; deficiency causes a weak, thin froth which showers much mineral back into the pulp.

Conditioners. The quantities of activators and depressants vary with the substance. When COPPER SULPHATE is used without cyanide the amount of the hydrated salt ($CuSO_4 \cdot 5H_2O$) is ordinarily less than 0.25 lb. per ton; when used to reactivate it may be twice this plus the copper equivalent of one-third the weight of cyanide ion previously added. The amount of CYANIDE required for normal lead-zinc ores is 0.05 to 0.2 lb. per ton; for copper-iron ores, about the same. LIME quantities for depressing pyrite in copper ores range from 3 to 5 lb. per ton. Excess cyanide depresses copper minerals; excess sulphide depresses all sulphides and gold; excess alkali depresses lead, etc. For further details see the specific reagents.

***p*H is always held above 7, if possible, on account of high maintenance expense in acid pulps.** The only sulphide that floats best in acid pulps is PYRITE; where high recovery is

desirable, as at the BOLIVIAN TIN properties, *p*H is held at 4.5 to 7; otherwise pyrite flotation both in gold mills and in lead-zinc-iron differential mills is effected in the range from 8 to 9. COPPER MINERALS are floated at *p*H 8 to 9 when pyrite depression is unimportant or when it is effected by cyanide; if lime is used as the pyrite depressant, however, *p*H is usually in the range 10 to 12. GALENA is usually floated in the range 7.5 to 9 whether alone, as a bulk concentrate with sphalerite and/or pyrite, or as a differential float. SPHALERITE, after activation with copper, floats over the range from 7.5 to 11; if pyrite is to be depressed, the usual range is 10 to 12. MOLYBDENITE flotation is substantially unaffected by *p*H and operations are, therefore, just above neutral, except in so far as depression of accompanying sulphides or dispersion of gangue requires another value. Range for the NONMETALLIC MINERALS depends upon the collector; with soap the optimum range for a given mineral is that in which contact angle is a maximum (Fig. 2), but another point may be chosen on the basis of depression requirements; with cationic collectors the acid side is usually better on account of the effect on solubility of the collector.

Place of addition of reagents depends on their function. Reagents added for control of pulp character are usually put in the grinding mills; LIME is sometimes added at the bins when the ore is wet and acid. ACTIVATORS and DEPRESSANTS should be introduced in time to permit the required reactions to complete before aeration is started. However, since the reactions are usually ionic, and the reagents are ordinarily added in solution into a pulp undergoing agitation, addition is sometimes deferred until just before entrance into the cell. COLLECTORS are normally added after the conditioners. The controlling elements are ease of dispersion, tendency to decomposition or to reaction with dissolved salts, and speed of the collecting reaction. OILS and the oily sulphide collectors (*e.g.*, Minerec) require more time and more agitation than chemical collectors but do not need protection; SOAPS react relatively slowly on account of the low concentration of ionic material, the bulk being in molecular and micellar dispersion; the SULPHYDRATES are relatively unstable, highly ionized, and highly reactive; their addition should be held back as long as possible especially when the pulps are foul. When the collector reacts with one of the conditioning reagents, its addition should be held back as long as possible to permit time for consumption and dilution of the latter. When protection is unnecessary, maximum collection is obtained by addition in the grinding mill (*140 ✱ 11 J 34*). FROTHERS are ordinarily added in the cell feed box.

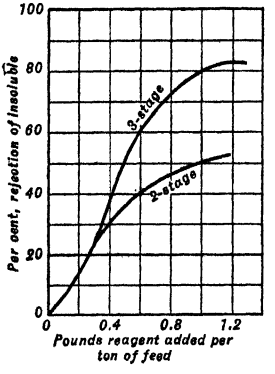

FIG. 48. Flotation of quartz with two-stage and three-stage additions of collector (*After Clemmer, et al.*).

Stage addition is stepwise feeding of the same reagent at different points along the flow of pulp through the flotation operation. It frequently starts with the grinding circuit. It serves to prevent overaction of a reagent at a single addition point with a later deficiency of action due to consumption or removal, and it decreases reagent consumption. It is especially useful and usual in differential work when the requirements as to concentrations differ at different points in the circuit. It may spell the difference between success and failure in a soap-flotation operation requiring close selection (*32 IEC 645*), or in operations requiring sulphidizing of mixed sulphide-oxide ores, where excess of sulphide ion depresses both sulphides and sulphidized oxides. The beneficial effect in cationic collection of silica from magnesite is shown in Fig. 48. It is usual in operations with powerful collectors and frothers, or with reagents which decompose readily, or when the content of soluble salts which consume reagent is high. Stage addition of collector reduces counteraction to the depressant.

34. REAGENT FEEDING

Reagent feeding must be regular and the quantity fed must be proportional to the quantities of ore and water running. No satisfactory method of effecting such proportioning automatically has yet been devised, but with the present development of automatic control apparatus there is no reason to believe that the method will not be forthcoming as soon as the demand becomes sufficiently insistent.

General requirements for a feeder are: precision to within about ±10%; certainty of operation, with, preferably, some automatic signal to warn of stoppage; ease of adjustment; reasonably wide range of adjustment; protection against dust, splash, vibration and jar; simplicity; resistance to corrosion and mechanical wear; prevention of segregation of nonhomogeneous materials; reasonable first cost and low operating cost.

Dry feeders are used when the reagent is solid, fine grained, nonhygroscopic, and the quantity fed is large enough to constitute a reasonably continuous stream. They comprise

miniatures of familar types of mechanical ore feeders delivering from a storage hopper. Belt-type feeders are most common, quantity being regulated either by varying belt speed or the width or depth of hopper opening; speed variation is preferable but more expensive. It is well to supply a rotating rake or scratcher over the discharge end to prevent hang-ups at this point, if the speed is slow. Roller feeders, plate feeders of the Challenge type, reciprocating push feeders, shaking and vibrating feeders, and screw feeders are also used, but are, in general, less dependable. A guard screen should always be provided to prevent charging lumps to the hopper; the latter should be large enough to hold a little more than one day's supply of reagent, in order to insure a daily visit and inspection by the operator, and it should be of such construction that the run of material through it is not affected by the amount present. A charge floor a few inches below the hopper top is a convenience and tends to prevent spill in charging, but it also invites introduction of extraneous matter.

Lime is normally fed dry, but unless expensive brands are purchased, it must be either crushed or slaked before it can be handled satisfactorily. As a result many plants feed it as MILK OF LIME, *i.e.*, as a thin suspension or slurry in water, normally containing about 1 part CaO to 4 of water. This is made by grinding burnt limestone in a tumbling mill, in closed or open circuit according to the grinding capacity, and is usually stored in a tank with slow mechanical agitation, whence it may be fed directly or, as in some large mills, circulated continuously by pump through supply lines to the feed points where it is drawn as required through valved outlets. High-grade powdered lime may be slurried in a stirring tank continuously fed with dry lime and water at predetermined rates to balance drawoff directly to the feed points. At MIAMI milk of lime is fed through orifices from a constant-head tank, through which circulation is maintained by pump from a storage tank.

At UTAH 1~1/4-in. limestone is purchased at the quarry, shipped in bulk by rail 25 mi. to Magna, burned in rotary kilns (1 @ 6×125-ft. and 1 @ 8×125-ft.) with a consumption of 1 lb. coal per 3.7 to 4 lb. burnt lime. The product contains 77 to 80% available CaO. It is slaked in two Hardinge mills in closed circuit with drag classifiers; classifier overflow with 20% solids is pumped through 4-in. lines to agitator storage tanks at the two mills (Sec. 2, Fig. 18), thence to feeders with gravity return of excess to the storage tanks. Cost delivered to the storage tanks is $6 to $8 per ton of lime; consumption is about 4 lb. per ton of ore.

At INTERNATIONAL NICKEL (*130 J 467*) lime received in bulk is unloaded by portable conveyor to a small gyratory and proceeds thence to a 125-ton storage bin, feeder, 3×8-ft. rod mill in closed circuit with a rake classifier (water added as required); overflow goes to an intermediate storage tank, pump, 15,000-gal. circulating storage tank with two agitators, where it is diluted and whence it is pumped through a circulating system from which it is drawn off as desired.

Wet feeding in the form of dilute aqueous solutions is preferable for all water-soluble reagents that are used in small quantities. Usual procedure is to make up solution of the desired strength in a supply tank from which it is drawn as needed to a feeder. The more dilute the solution the more accurate the addition. Concentrated solutions should not be used on account of the tendency to crystallize and clog conduits. The ordinary method of draw from the supply tank is through a valve operated by a liquid-level control device on the feeder tank. In smaller mills, the feeder tank itself is made large enough to hold supply for a shift or for 24 hr.

Copper sulphate is usually made an exception to the ban against feeding of concentrated solution. The usual method is to maintain a wooden barrel well filled with crystalline $CuSO_4 \cdot 5H_2O$, to baffle the barrel to prevent short circuiting of inflow to outflow, and then to so control the flow of new water to the barrel that it will displace the required amount of saturated solution. Rubber hose is used to convey saturated solution to the point of addition. A storage hopper for dry crystal above the barrel, with a gravity feed controlled by the quantity of crystal in the barrel, decreases the amount of attention necessary.

Wet feeders are of either constant-head flow types or mechanical; the former are cheaper to install, the latter more dependable in operation.

Flow-type feeder. A simple form used at OUTOKUMPU is shown in Fig. 49. It comprises a floating weir *a*, 2 mm. wide, formed by a slot in a piece of 3/4-in. tubing, as shown. This is mounted on a float *b*, and is regulable in position with respect to the float by means of adjusting screw *c*. Rubber tubing *d* connects with a pipe passing through the side of the tank in which the weir floats, the length of tubing, size of tank, and position of outflow pipe being so proportioned that the suspended weight of tubing does not vary between the operating full and empty positions of the float and the float cannot reach the wall of the tank. This feeder is subject to considerable variation in delivery if fibrous dust is present, and the weir cannot escape some fluctuation in submergence as the reaction of the rubber tubing changes with change in relative position between the fixed and float-supported ends thereof.

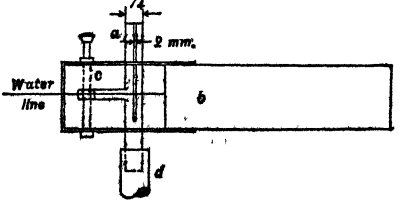

FIG. 49. Liquid reagent feeder at Outokumpu.

Siphon feeder is a siphon so mounted that submergence of the feed end is maintained and the head on the discharge remains constant between times of adjustment. The ADAMS FEEDER (Fig. 50) comprises a rectangular tank *a* of about 8 gal. capacity on which is mounted the parallel frame *b*, *c*, *d*, *e*. Siphon *f* is clamped to part *c*, so that change in the inclination of *b*, effected by screw *g*, changes the head on the siphon discharge. Float *h*, on which the lower end of *c* rests, maintains submergence. Siphon tubes are of different sizes according to the volume to be fed and the viscosity of the liquid and are made of different materials according to the chemical nature of the reagent. The parallel frame may be arranged to actuate a valve on a supply tank.

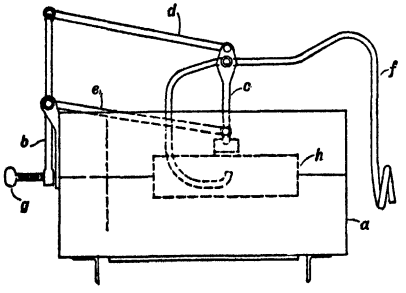

FIG. 50. Adams siphon feeder (*After Mine & Smelter Supply Co.*).

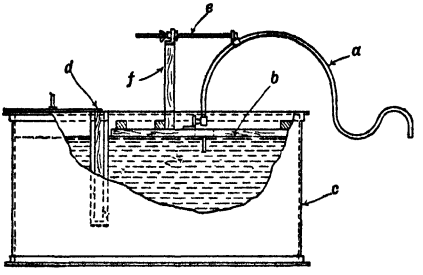

FIG. 51. Home-made siphon feeder.

Home-made siphon feeder is shown in Fig. 51 (*139 #3 J 51*). Siphon *a*, of copper pipe, is supported by float *b* in float compartment of tank *c*. The other end of the tank is a covered feed compartment. The siphon support is hinged to the float, and the head on the siphon tip is regulable by means of a wing nut on the threaded rod *e* supported on post *f*.

At MIAMI (*Q*) xanthate solution and pine oil are fed through orifices from tanks in which constant level is maintained by automatic liquid-level control from supply tanks. Operation is reported as accurate at all times.

Mechanical feeders are of three general types, *viz.*, disk-and-cup, reciprocating-cup, and pulley-and-finger.

Disk-and-cup feeder takes a variety of forms. The best known (Fig. 52) consists of a disk *a* driven at constant speed by a small motor with speed-reducer; a number of pins *b* of different lengths mounted on the disk and carrying cups loosely suspended so as to hang vertically by gravity; bar *c*, adjustable vertically (sometimes also as to extent of projection toward the disk); and a trough *d*, mounted in such a position as to receive spill from the cups when they are tilted at or near their top positions and, in the form shown, slidable along its axis; all mounted on a tank *e*. The cups fill when revolution of the disk immerses them in liquid in the tank; they spill more or less of their load according to the degree of tilt that they receive in dragging over bar *c*. Speed must be such that the cups do not rebound on striking the bar. Disks are normally 15 to 30 in. diam., but may be made larger. Number and size of cups are also matters of design for a particular service. A form having greater flexibility has all cup pins the same length and two or three or more cups on a pin, arranged so as to be readily removable and to be fixed in any of the several cup positions along the pin.

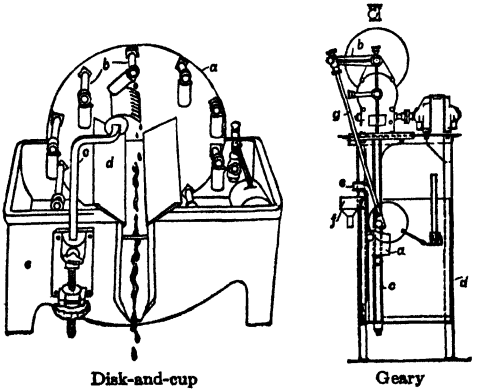

Disk-and-cup Geary

FIG. 52. Wet reagent feeders.

In another type (CLARKSON) the cups are fixed on the disk and deliver onto a splitter adjustable to deliver any desired fraction of the stream to the discharge pipe. Another variant of this type has nontilting cups adjustable as to angle so as to spill more or less of the load before reaching the position where the balance dumps into the trough.

At Utah adjustment is made by means of a 60-point rheostat on the variable-speed driving motors. The adjustment is easy and accurate but constancy is interfered with by dirty motor brushes.

Geary feeder (Fig. 52) is of the tilting-cup type, but the cup *a* reciprocates vertically, under the impulse of crank *b*, between guides *c*, which extend down into tank *d*. The bail of the cup is attached to the bottom and the front guide *e* is led out at the front above the delivery hopper *f*, thus permitting the cup to tilt to an extent adjustable by varying the length of the connecting rod *g*.

A homemade modification of the Geary feeder as built at St. Joseph Lead Co., Hughesville plant, is shown in Fig. 53. In the front assembly *A* is a 2×10-in. plank making about 15 @ 10-in. vertical s.p.m. under the impulsion of cranks *B* and connecting rods *C* from pulley-driven shaft *D*. Members *E*, comprising a 1/2-in. bolt welded to a 3/8×1-in. bar, carry tilting cups *F* mounted on brackets welded

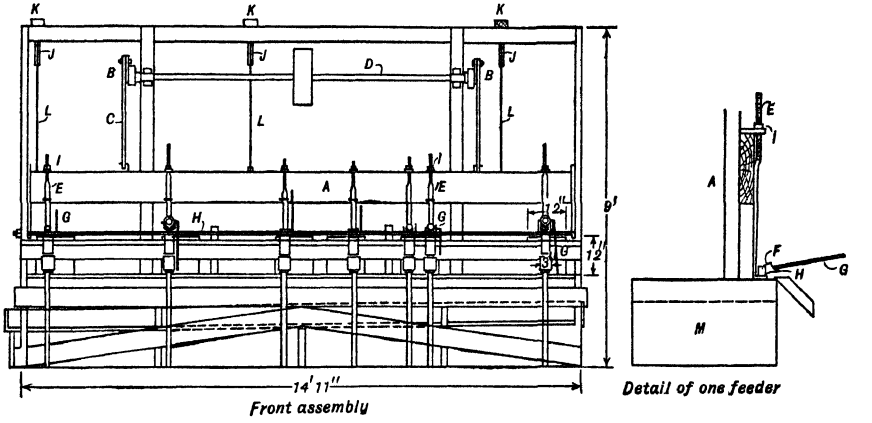

Fig. 53. Geary reagent-feeder battery.

to the lower angled end. Tipping rods *G* bearing against fixed rods *H*, in conjunction with the position of nut *I* on rod *E*, determine the extent of tilt and, consequently, the amount delivered from a full cup. The device serves additionally as a mixer; members *J* are 4-ft. walking beams suspended from members *K*, with driving connecting rods *L* linked to *A* and buckets suspended on rods at the other ends; these buckets hold weighed charges of reagents and slosh up and down in the requisite amounts of water in mixing tubs which supply the feeder tanks *M* via 1/2-in. centrifugal pumps. A 3-hp. motor drives the apparatus.

Tilting-cup feeders are not suitable for viscous liquids.

Pulley-and-finger feeder is used for both mobile and viscous liquids. The pulley is so mounted over a tank containing the liquid to be fed that it dips into the liquid therein and carries a film of liquid with it on the emerging side. The finger is a shallow trough with a chisel-pointed upper end which bears against the downcoming face of the pulley near the top in such a way as to slice off a film of liquid. The width of the slice is adjustable by sidewise motion of the trough across the edge of the pulley and the thickness or depth of slice may be varied by adjusting the pressure of the finger against the face.

Delivery for a given setting varies with the temperature, owing to change in viscosity of the liquid, so that thermostatic control of tank temperature is necessary if mill temperatures fluctuate much. Fibrous dusts catch on the knife edges and change delivery rate, grit wears both pulley face and knife-edge, and corrosive liquids pit them and make them irregular.

Pumps of piston type, of miniature size, with variable stroke length may be used for viscous liquids if the amount to be delivered is not too small. They come nearest to constant delivery of such material in the face of variable viscosity, provided pressure feed is arranged.

Use. On the basis of some 50-odd mills reporting (Q) about 40% of the liquid feeders employed are of the disk-and-cup type, about 25% of the pulley-and-finger type, about 12% the skip type (Geary), and the rest use siphons, drip cups, or constant-head flows through valves. Disk-and-cup type uses were 45% for viscous and the remainder for mobile liquids; temperature was asserted to affect delivery at three of the plants where pine oil and liquid Aerofloat were fed. Other interferences with delivery as reported were sediment, corrosion of buckets, and dropping of buckets. Accuracy to within 1 or 2% was

reported from two mills. The preponderant rating was good on the scores of accuracy and ease of adjustment. Pulley-and-scraper type uses were 70% on viscous liquids (oils and liquid Aerofloats). Temperature changes and dirt in the material or settled on pulley or finger were reported as the usual interferences. Ratings as to accuracy were not as high as for the cup type, but this is to be expected from the more difficult materials fed. Rating was high as to ease of adjustment. Geary-type uses were 50–50 as to viscous and mobile liquids. Ratings as to accuracy were ±2% where reported in figures. Constancy rated high, with wear, occasional binding, and level control the reported difficulties. Easy adjustment was the unanimous opinion. Siphon uses were 80% on aqueous solutions, but satisfactory performance is reported on pine oil. Drip cans are used principally for supplemental stage addition along the cell, the use being about half-and-half for aqueous solutions and for oils; dirt and changing head are the common difficulties. Constant-head tanks with valved outlets are reported for xanthate solutions, milk of lime and pine oil; at NEVADA CONSOLIDATED (McGill) a constant-head tank feeds a diaphragm pump which discharges to a launder with an adjustable splitter which returns excess to the tank.

Dry feeding by belt is practiced for dry lime and soda ash at most mills where these reagents are used in the grinding circuit or conditioners. For thiocarbanilid a shaking feeder and a horizontal disk with an adjustable scraper are reported.

Feeder floor. In most mills all of the liquid feeders for the mill or for one or more sections thereof are placed on a floor which affords gravity flow to the feed points and which, preferably, is readily accessible by hand truck to the storeroom. This floor should be roomy, afford ready access to the supply tanks, and have suitable measuring buckets, scales, scoops, etc., for compounding solutions. Provision should be made for hosing down when necessary, with discharge of the cleaning water to some point from which it cannot get back into the mill stream.

At MIDVALE (*IC 6492*) all reagents are prepared on the top floor of the mill, which is served by push-button elevator of 2,500-lb. capacity. The floor carries 6 hoppers for dry reagents, which feed into 250-gal. Devereaux mixing tanks which, in turn, flow to 1,000-gal. storage tanks. Dry reagents which are to be fed in solution are delivered to the preparation floor in drums, weighed out in the quantities required for a 250-gal. batch, and delivered via the hoppers to the mixing tanks. Solution strengths are such (±13%) that 20 lb. of dry reagent is contained in 1-in. depth of solution in a storage tank. Oils are stored in 14,000-gal. main supply tanks outside the mill and pumped thence to the mixing tanks, from which the mixtures flow to 1,000-gal. mill storage tanks. All storage tanks feed individual Geary feeders by gravity through 3/4-in. lines.

Stage addition of a given reagent is provided for in large mills by having a separate feeder for each point at which addition may be required. At the TOOELE oxide mill (*IC 6759*) there was a feeder each for xanthate and sodium sulphide for each cell of a 12-cell machine. At small mills stage additions are usually made from drip cans.

35. SIZE OF FEED

Maximum size depends upon severance requirements and levitation capacity. Maximum in sulphide flotation, using sulphydric reagents, was about 28-m. for 11 lead-zinc mills reporting, 35-m. was maximum for 6, 28-m. for 2, and 48-m. for 3. Of 14 copper mills, 6 reported 35-m. grinding, 6 @ 48-m., and one each at 65-m. and 100-m. Pyrite is floated from Bolivian tin concentrate at 20-m. maximum. Gold ores, in general, are ground to at least 65-m. and some to 200-m. before flotation. Assay of the coarsest size in the tailing is generally the highest of all of the sizes, and, for a given ore, is higher the coarser the maximum. The tonnage of such material is, however, low, so that the saving effectable by finer grinding is not, ordinarily, sufficient to overcome the additional cost thereof plus the increased loss in the finest fraction (*post*). Deslimed feeds as coarse as 10-m. are treated in nonsulphide froth flotation, particularly in the case of coal, but the usual maximum is 48-m. Table flotation has treated deslimed nonsulphide feeds as coarse as 3-mm. maximum; usual maximum is 20-m.

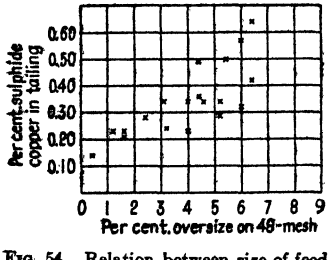

FIG. 54. Relation between size of feed and assay of tailing in a pneumatic machine (*55 A 576*).

Tailing loss *vs.* size. In treating normally ground sulphide feeds, losses in tailing are usually a minimum in the middle size range whether the maximum size is 28-m., 60-m., or 100-m. (see Tables 17 and 18 and Figs. 54, 55, 56, and 57). Similar results are reported NORANDA (*118 A 576*). With such feeds it is to be noted that the failure of the

machines is actually even greater than appears, since in the classifier overflows comprising them the heavy mineral is much finer than the gangue.

Table 17. Sizing-assay test of feed and products of agitation-froth machine, Braden Copper Co. (*After Broadbridge, 22 IMM 37*)

Mesh	Feed, %		Concentrate, %		Tailing, %	
	Weight	Cu	Weight	Cu	Weight	Cu
40	6.4	0.8	.....	.....	3.6	0.60
60	18.3	1.0	5.8	15.0	26.1	0.65
80	11.5	1.8	9.3	14.4	8.6	0.45
100	14.9	2.9	18.0	17.3	11.7	0.32
150	8.1	3.6	25.6	22.0	12.7	0.38
<150	40.8	3.8	41.3	24.7	37.3	0.75

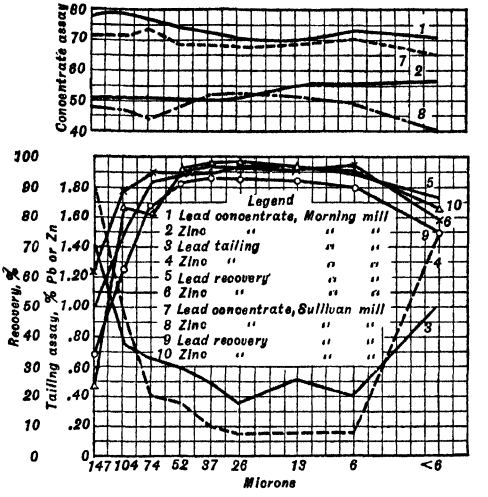

FIG. 55. Assay and recovery *vs.* particle size, lead-zinc ore.

Table 18. Sizing test of feed and products and sizing-assay test of tailing of pneumatic cells at Miami Copper Co.

Mesh	Sizing test			Sizing-assay test of tailing			
	Feed	Tailing	Concentrate	Weight, %	Assays, % Cu		
					Total	Oxide	Sulphide
28	.....	.....	.....	1.4	0.61	0.18	0.43
35	.....	.....	.....	4.3	0.58	0.14	0.44
48	0.7	0.7	.....	8.1	0.52	0.14	0.38
65	4.6	4.9	.....	9.7	0.45	0.15	0.30
100	11.8	12.9	.....	12.9	0.38	0.14	0.24
150	17.3	16.3	.....	12.1	0.40	0.15	0.25
200	5.6	4.6	0.8	5.9	0.40	0.23	0.17
<200	60.0	60.0	99.2	45.6	0.83	0.68	0.15

Martin (*IC 6479*) reports the following relationship between grinding time in a batch mill, size of feed, and tailing assay in a series of flotation tests on UTAH ore:

Time, min	3	5	10	15	20	25	50	150
% <200-m	51.3	57.9	76.5	88.2	93.6	95.7	99.4	99.9 *a*
Tailing assay, % Cu	0.21	0.13	0.08	0.07	0.06	0.06	0.05	0.63

a <300-m.

Fig. 57 (*14 MMt 421*) represents results obtained in floating sized fractions of pure sphalerite. It shows both maximum recovery and maximum rate at 150 ~ 200-m. with the drop progressively more serious in the fine sizes. It shows also the importance of long time-factor for floating fine sizes, even when there is no interference by slime.

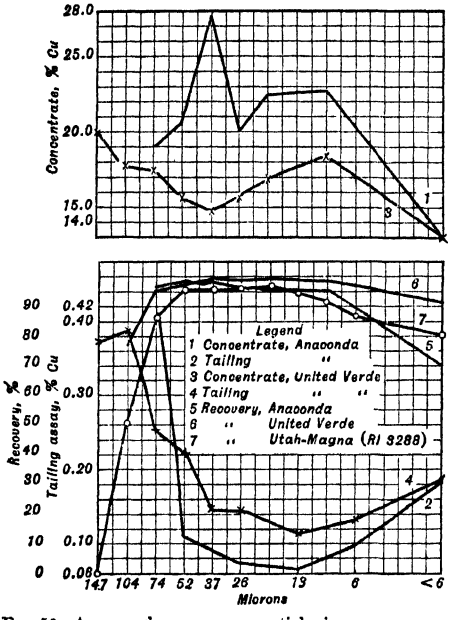

Fig. 56. Assay and recovery *vs.* particle size, copper ore.

Reasons for failure to recover large and small particles are different. Large particles are lost because of the inability of the bubbles to carry them. In the agitation-froth process many of the bubbles attached to large particles do not have sufficient buoyancy to lift them to the top of the pulp in the spitzkasten. Also in many cases the large particles are jarred loose from the bubbles that precipitated upon them, because of the relatively great inertia of these large particles. In bubble-column machines, it is difficult to lift large particles into the bubble column, on account of their greater settling velocities, and it is, of course, more difficult to lift them in the bubble column, for the same reason. As between the two types of processes, the agitation-froth process is the better fitted to hold large particles in the froth, once they have been raised to that point, both because of the firmer bond between the particles and the bubble walls and because the fine-textured froth acts mechanically as a screen and prevents large particles from falling back, even though they become detached from the bubbles.

The reason for loss of small particles is not known. Gangue flocculation in which otherwise floatable particles are locked away in gangue floccules is undoubtedly one cause. Slimed sulphide is generally more highly oxidized than granular. Fine particles are more difficult to bring into contact with the separating surfaces in a bubble column. Differential flocculation of the floatable material is normally a concomitant of good recovery, but it is not established as causative. Gaudin *et al.* (*112 A 303*) ascribe the difficulty to interaction between all of the minerals present resulting, eventually, in making them all alike at the surface, and recommend ball-mill addition of collector, with consequent surface closure of the material to be floated, as a corrective.

McLachlan (*AIME, N. Y. meeting, 1928*) reported that at Nacozari, when flotation performance declined by reason of high acidity or excessive salt content of the mill water, the increased tailing loss was in the >65- and <200-m. sizes.

Several plants have found (*Q; 136 J 395*) that the use of neutral oil in addition to sulphydric collector is useful for aiding recovery of overgound sulphide.

The relatively great difficulty in floating slime sulphides is not universal. Of 12 copper plants reported in Information Circulars of the U. S. Bureau of Mines, 9 showed an excess of assay of <200-m. tailing over that of 150~200-m. sand ranging from 10 to 100%, averaging 49%, but 3 plants made lower tailing in the <200-m. size, averaging 39% superiority. Eight out of 10 lead-zinc plants showed excess values in <200-m. slime over 150~200-m. sand ranging from 17 to 380% and averaging 116%; 2 showed the reverse to an extent of 37%. Zinc excess in slime occurred in 8 out of 12 cases; the range was 25 to 1,220%; the average (excluding the maximum) 52%. In the 4 plants in which slime zinc tailing was superior, the range of superiority was 17 to 50%, and the average 43%.

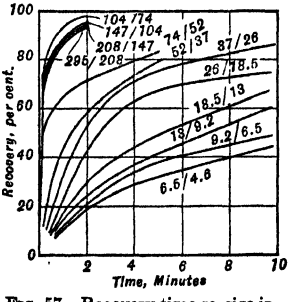

Fig. 57. Recovery time *vs.* size in μ (standard reagents).

The same condition exists in nonsulphide flotation, prompting Coghill and Clemmer (*112 A 452*) to generalize that the distinctly crystalline, lustrous minerals are the more readily floatable and that the earthy ores are difficult to concentrate. Further experience in the nonsulphide field has shown that the decomposition and alteration of which earthiness is a mark have resulted in such complete infiltration of the residual structure of the earthy ores by the decomposition products that all particles after comminution tend to present one kind of mineral only at the surface, irrespective of their interior composition. The remedies are dispersion of the alteration products, either by chemical means or attrition mixing (Art. 7) or both.

Machines. When feed is coarse, it is better to arrange the delivery slot to the spitzkasten of an agitation machine to deliver in an upward or horizontal direction so that the

bubble-mineral aggregates do not have to reverse momenta against the impulse of the pulp stream. This principle is also followed in many subaeration machines, in which considerable pains have been taken by the designers to flow the pulp being aerated directly upward toward the bubble column and thus to add to the pulp-elevating action of the rising bubbles the carrying power of the pulp liquid.

Bubble-column machines are best for fine pulps because of the flexibility that they permit in control of intensity. In order to make grade, the slow-settling gangue slimes must be given time to drain out of the bubble column, while at the same time the mean rising velocity of the bubbles therein must be greater than the mean falling velocity of the fine economic-mineral particles. Simultaneous control of pulp level and air supply aimed toward production of a deep bubble column which is highly liquid at the bottom and as dry as possible at the top is the indicated procedure. No such variation in froth consistency is possible in the agitation machine.

Froth should be made tougher and quieter for coarse than for fine feeds.

Economics of feed size is to be decided on balance between recovery and cost. Recovery is, in general, improved by finer grinding, at least down to 100-m. maximum. Grade of concentrate also tends to improve with the greater severance thus effected. On the other hand, grinding costs increase materially, capacity of flotation machines decreases, reagent consumption is higher, and concentrate handling costs more the finer the flotation feed.

It is reported from WALKER MINE (*IC 6555*) that increase in feed size from 4% >48-m. to 14% >48-m. increased plant capacity (limited by grinding capacity) from 750 t.p.d. to 1,200 t.p.d., and that the concomitant loss in tailing was more than offset by decrease in milling cost. Economies at CLIMAX, where <20-m. feed is roughed and rough concentrate is ground to 200-m., are yet more striking (*A TP 1675;* Sec. 2, Fig. 142).

Stage flotation describes a practice in which low-grade concentrate is roughed out at relatively coarse size, using very intense flotation conditions, and the bulk of the feed is discarded as tailing. The concentrate is then reground and refloated. The practice is employed both for one-mineral separation (MIAMI, AJO) and for differential work (CONSOLIDATED MINING & SMELTING, TENNESSEE, SHENANDOAH-DIVES). Coghill (*119 P 404*) states that at the PRIMOS CHEMICAL CO. molybdenum plant recovery was raised from 60 to 83% by floating coarse pulp and then regrinding and refloating the tailing, and ascribes the improvement to the fact that such initial grinding of all of the pulp to ultimate flotation size overground the coarser mineral. Table 19 shows the effect of stage flotation at ALLENBY (*87 A 117*); Table 20 shows the effect at MIAMI (*IC 6573*), where marked increase in grade of concentrate outweighed a small increase in tailing assay.

Table 19. Effect of stage flotation at Allenby *a*

Mesh	Before concentrate regrind				After concentrate regrind		
	Concentrate		Tailing		Concentrate		Tailing
	Weight, cum. %	% Cu	Weight, cum. %	% Cu	Weight, cum. %	% Cu	% Cu
>65	1.8	12.28	2.7	0.66	.....	.....	.....
100	10.5	11.39	16.3	0.45	0.5	17.37	.....
150	16.8	12.73	24.6	0.39	1.6	20.45	.....
200	27.8	14.79	37.9	0.38	4.4	19.93	.....
270	38.7	17.84	45.1	0.26	9.4	19.63	.....
325	46.9	23.76	50.4	0.23	18.4	21.33	.....
<325	53.1	36.85	49.6	0.17	81.6	35.43	.....
Totals.....	100.0	27.10	100.0	0.277	100.0	32.54	0.223
Recovery....	81.7		....		85.8		.....

a Ore is finely disseminated chalcopyrite and bornite in a siliceous gangue.

Table 20. Effect of regrinding and reflotation on Miami primary concentrate (*After Hunt, IC 6573*)

	Final tailing, assay, %			Final concentrate, assay, %			Ratio of concentration
	Total Cu	Oxide Cu	Sulphide Cu	Cu	Fe	Insol.	
Without re-treatment....	0.089	0.042	0.047	20.12	22.8	26.2	34.0
With re-treatment.....	0.113	0.053	0.060	42.11	19.5	2.9	74.2

Stage flotation gives much of the economic advantage of low-cost coarse flotation without sacrifice of the metallurgical advantages of fine grinding. It has the further advantage of decreasing overgrinding of sulphides, since the quantity of very fine sulphide produced in regrinding concentrate to a given maximum size is, in general, much less than when the great bulk of gangue in the raw feed must be concurrently reduced in the same mill.

Desliming appears to be essential in table flotation, since otherwise gangue slime and levitated concentrate discharge together. Slime also tends to coat the coarser mineral and prevent oiling; and it consumes large amounts of collector both by reaction, and by coating and thus immobilizing oil droplets. Desliming aids operation in most nonsulphide froth flotation. The reasons are, in part at least, those prevailing in table flotation, with the additional one that the slime appears to form viscous films at the separating surfaces in bubble columns and thereby to exclude granular material.

At BUNKER HILL & SULLIVAN (*IC 6314*) a very light desliming more than doubled machine capacity and reduced tailing assay from 0.7% Pb and 0.7% Zn to 0.14% Pb and 0.45% Zn. The amount of slime removed (and discarded) comprised 2.4% of the tonnage of feed to flotation; it assayed 4.2% Pb and 0.7% Zn and contained 0.9% of the lead and 1.1% of the zinc in the feed.

Separate sand-slime treatment was practiced in a few copper mills (*e.g.*, MT. MORGAN; BRITANNIA; ANACONDA; Sec. 2). The basic reason therefor is that the oxides and tarnished sulphides which concentrate in the primary slimes float slowly and only under relatively intense conditions, while in the ground-sand feeds the copper minerals float readily and quickly and flotation conditions must be relatively gentle to aid in depressing pyrite.

Differences in floatability between primary slime and fine material produced by grinding at ANACONDA (*128 J 292*) are indicated by Tables 21 and 22, showing that, with very little difference in copper content and with the iron content militating against the sand so far as grade of concentrate is concerned,

Table 21. Sizing-assay tests on Anaconda sand-flotation products (*a*) (*After Morrow, 128 J 298*)

Mesh	Concentrate					Tailing				
	Weight, %	Assays, %				Weight, %	Assays, %			
		Cu	Fe	SiO_2	Al_2O_3		Cu	Fe	SiO_2	Al_2O_3
48	.....	.....	.....	.....	.....	0.4	.....	.....	.....	.....
65	0.2	.....	.....	.....	.....	7.8	0.19	1.8	87.5	6.0
100	0.3	18.7	14.2	29.8	2.4	10.9	0.16	1.6	87.2	5.5
150	4.5	22.9	22.4	11.0	1.0	9.8	0.18	5.4	80.1	6.7
200	12.2	24.7	25.6	3.5	0.7	13.7	0.18	13.1	67.8	5.3
300	26.4	28.0	24.7	2.0	0.5	9.1	0.23	17.0	58.5	4.5
<300	56.4	32.1	16.8	9.1	2.6	48.3	0.30	13.8	56.0	9.6
Totals	100.0	29.6	20.2	6.7	1.7	100.0	0.24	10.9	66.2	7.5

a Feed assay: 3.97% Cu; 11.8% Fe.

Table 22. Sizing-assay tests on Anaconda slime-flotation products (*a*) (*After Morrow, 128 J 298*)

Mesh	Concentrate					Tailing				
	Weight, %	Assays, %				Weight, %	Assays, %			
		Cu	Fe	SiO_2	Al_2O_3		Cu	Fe	SiO_2	Al_2O_3
150	0.3	16.1	20.8	21.1	1.7	0.9	0.30	1.6	79.4	8.7
200	0.8	17.8	23.7	14.8	1.4	3.7	0.16	0.3	81.8	9.5
300	2.0	20.4	24.6	9.6	1.0	6.9	0.17	0.3	81.0	9.9
<300	96.9	20.3	19.6	15.0	5.4	88.5	0.44	2.4	64.6	17.4
Totals	100.0	20.3	19.7	14.9	5.3	100.0	0.40	2.2	66.5	16.5

a Feed assay: 4.16% Cu; 5.8% Fe.

sand concentrate and tailing were 29.6 and 0.24% copper respectively, while the corresponding figures for slime flotation were 20.3 and 0.40%. In the slime concentrate the principal difficulty was that the finest gangue floated. The natural assumption is that the 3 : 1 ratio of silica to alumina in the slime concentrate represents clay, and that the higher ratio in the sand concentrate is due to some fine silica accompanying the clay. On the other hand, applying the 3 : 1 ratio to the sand-concentrate gangue, it becomes apparent that very little of the silica in the sand concentrate is very fine, while the high-silica, low-alumina content in the coarse sizes of the sand concentrate indicate that the low copper assay of the coarse sizes is due to flotation of locked quartz middling. Sizing-assay tests of sand-

flotation feed showed that with a grind showing 7.3% on 65-m. 73% of the total copper was in the <300-m. size. Finer grinding is discouraged by the showing that losses in <300-m. are upward of 25% higher than in the coarser sizes.

At BRITANNIA (*IC 6619*) tailing for combined sand-slime treatment is about 0.05% higher than the combined tailings from separate treatments. At a number of other copper mills separate treatment has been tested on pilot or full scale [NACOZARI (*IC 6358*), COPPER QUEEN (*IC 6404*), UTAH (*IC 6479*)] but proved not sufficiently advantageous to justify final adoption. At SUYOC (Sec. 2, Fig. 62) colloidal slime washed out in the crushing plant is by-passed to the scavenger cells.

36. TIME-FACTOR

Time-factor is involved both in the phenomena of conditioning and collector-coating and in machine operation. Requirements for time for economic completion of the chemical phenomena can usually be satisfied by introduction of reagents at a point or points in the normal flow of pulp ahead of the rougher; if the time thus available is too short, a conditioning tank, which is simply a reservoir of predetermined time-factor fitted with agitation means to prevent segregation by sedimentation, is inserted in the flow. It should be arranged for drawoff at various levels in order to permit change of time-factor as an operating variable without interference with feed rate or pulp density.

Conditioning times reported for sulphide flotation range from 5 min. to as much as 3 hr. with the normal about 15 or 20 min. In most cases, but not all, it is well to err on the high side.

Time-factors in flotation machines differ primarily according to character of ore, kind of separation, size of feed, and kind of machine. As between slow-floating and rapid-floating ores there may be a difference of several hundred per cent. Thus reported time-factors for roughing and scavenging the porphyry copper ores range from 3.5 to 10 min. with an average of 7 min. while the time-factor for the pyritic copper ores ranges from 15 to 25 min. with an average of 18 min. Times for the clean lead ores and lead roughing from nonpyritic lead-zinc ores range from 4.5 to 9 min., average 6.5 min.; zinc roughing from similar ores averages 5 min. On the other hand, the complex lead-zinc-iron ores require from 15 to 20 min. for lead roughing, 15 to 30 min. for zinc roughing, and 10 to 15 min. for pyrite roughing. Clean gold ores require 10 to 20 min.; heavy pyritic gold ores and oxidized gold ores, 15 to 30 min.

Slimy feeds are always slower-floating than granular feeds; the variation may be several hundred per cent.

Machines. Subaeration machines are faster than pneumatic; of the former the machines that effect the best dissemination of air are fastest.

Cleaning time may be greater or less than roughing time, depending upon the separation to be made; when this is simply to drop rocky gangue and middling out of sulphide concentrate, cleaning times reported range from one-sixth roughing time to equality therewith; when the task is to separate sulphides, as in separating chalcopyrite or blende from pyrite, or galena from blende in bulk concentrates, reported cleaning times range from equal to 6 times the roughing times. Running up very high grade concentrates such as molybdenite or graphite requires cleaning times 3 to 10 times the roughing time.

Feed rate. There is a maximum feed rate for any cell under given conditions, but there is no minimum rate other than that imposed by economic considerations in design. That is to say, recovery in a given cell under given conditions is a maximum at the minimum feed rate, but the fall in recovery with increasing feed rate is very slow until the overload point is reached, when recovery falls rapidly with further increase. Many cells are fed far below the maximum rate. This condition of underload is more evident in series installations, such as the multi-compartment agitator machines and compartmented pneumatic machines, than with single-cell machines of trough type. In the multi-compartment machines the later compartments are acting as scavengers only, under normal operating conditions, and the recovery that they effect is small. When the feed rate is increased, more work is put on these later, normally underloaded compartments. In parallel-type installations, the machines are usually worked much more nearly to ultimate capacity, and when increased load comes on, some of the additional mineral goes into the tailing. (See also Art. 29, *Recovery*.)

Series *vs.* parallel operation. The ultimate capacity per cell is the same in both series and parallel installations. This was conclusively proved by careful experiment, both with standard Minerals Separation machines and with Callow machines, at the MIAMI COPPER CO. Practice favors series roughing, and scavenging with some underloading, as a precautionary measure.

Constant feed rate is important, for the reason that other variables, particularly reagent addition, are based on a given rate; change in rate changes the proportions and usually results in poorer performance.

37. PULP DENSITY

Pulp density is important on both chemical and mechanical grounds. Through its effect on volume it determines reaction times with a given flow rate of solids and a given volume of conditioning tank and flotation machine. Since most reagents are added on a pounds-per-ton-of-solid basis, pulp density determines reagent concentration and thereby both equilibrium point and reaction velocity. In general, conditioning in a thick pulp permits sensibly smaller reagent additions. This is one of the reasons for the practice of adding soluble collector in the grinding mill. When the reagent is a liquid insoluble in the proportions used, such as petroleum oil and fatty oils in flotation of nonmetallics, thick pulps are particularly helpful in effecting coating, since the oil droplets are practically smeared across the particle surfaces.

From the standpoint of levitation it is the volumetric aspect of pulp density that is important, *i.e.*, its effect on the spacing of particles. Flotation is normally more rapid and complete in the denser pulps, but concentrate grade is lower.

The following results reported by Gaudin (*F 118*) for a laboratory test on an artificial mixture of granite and galena are typical.

Solids, %	46	37.5	21	15	11.5	8
Concentrate, % Pb	43	57	62	64	68	75
Tailing, % Pb	0.12	0.14	0.14	0.27	0.45	0.56

Ralston (*U. S. pat. 2,064,031*) asserts, however, that in cleaning concentrate at UNITED VERDE the grade improved and assay of cleaner tailing rose also with increase in pulp density.

Newton and Ipsen (*139 #5 J 43*) conclude, from laboratory experiment, that pulp density has little or no effect on recovery, speed of flotation, grade of concentrate, or ratio of concentration. They do say that high density aggravates the harmful effects of slimes. The consensus of operators is that unless compensating changes are made, change in density affects all four of the above measures of performance; that optimum density for normally ground pulps lies in the range of 25 to 30% solids in roughing, with fall in recovery on both sides, usually accompanied by an increase in grade of concentrate in the more dilute pulps.

Dense pulps are better suited to agitation machines; bubble-column machines must be aerated so intensely in order to lift the heavy loads into the bubble column and support them there that it is difficult to prevent boiling, and the bubble column is so shallow that concentrate grade is low.

Coarse pulps must be denser than fine to overcome the tendency for coarse heavy mineral to settle out.

Dilute pulps are asserted to be best for floating flaky minerals (*45 CME 273*).

At AJO (*134 A 445*) the froth on all cleaner cells is sprayed with fresh water, which tends to reduce assay of insoluble in overflow. Pulps are frequently thickened in order to wash out dissolved materials, colloids, and slimes, where other methods of removal or combat are ineffective or overcostly. Common examples are thickening between lead and zinc flotation and the use of bowl classifiers to prepare pebble-phosphate feeds (Sec. 2, Art. 29; Sec. 3, Art. 30). Filtration prior to addition of cyanide has been suggested when the concentration of cyanicides, particularly iron, is high (*U. S. pat. 2,048,369*).

Table 23. Pulp densities in sulphide flotation

Type of ore	Pulp density, %			
	Rougher		Cleaners	
	Range	Aver.	Range	Aver.
Heavy sulphides:				
Copper-iron	30 to 50	35	10 to 50	30
Lead-zinc				
Lead	30 to 50	40	5 to 50	.....
Zinc	20 to 40	35	10 to 45	.....
Disseminated:				
Copper	18 to 33	25	10 to 23	15
Pyrite-gold	15 to 45	30	20 to 40	26
Lead	24 to 33	28	5 to 15	8

Densities used in practice (Table 23) run definitely higher in both roughing and cleaning with heavy sulphide feeds than with the disseminated ores. Densities in unit cells may run as high as 75% solids.

Density variation in machine. Pulp density falls markedly from head to tail of a long stage, particularly when the feed is highly mineralized, because of the fact that the density of a good mineral-bearing froth is ordinarily much higher than that of the pulp from which it comes.

At CONSOLIDATED MINING & SMELTING CO. feed to the lead rougher was 40% solid and tailing 26%, the fall was from 50% to 40% in the cleaner and 50% to 20% in the recleaner; in the zinc section the corresponding figures were 35 to 30, 45 to 36, and 45 to 35. Hence scavenger feeds are frequently quite dilute.

Maintenance of constant pulp density is just as important as determination of the right density. Ordinarily other conditions can be so adjusted that any pulp density within a considerable range will yield the same results, but once adjusted, results will fall off, if density varies. (See Sec. 8, Art. 14, for control of density of classifier overflow.)

38. TEMPERATURE

Temperature of the pulp has marked effect in any flotation operation which is being conducted under critical conditions, *e,g.*, starvation quantities of collector or frother or depressant. Rise in temperature normally increases reaction velocity. It aids completion of reactions involving decomposition, solution of solids, or formation of a gas as one of the reaction products, but ordinarily hinders reactions involving precipitation of solids. It reduces viscosity of oils and thus aids coating.

Practice. Most mills operating where there is a large seasonal change in pulp temperature report that metallurgical results in summer are better than those in winter and that flotation is slower in the cold pulps. Consumption of frother is ordinarily higher in cold pulps, but the ST. JOE lead mills in southeastern Missouri report higher frother consumption in summer. Where lime is used as a flocculant for slime, consumption increases with fall of temperature. MAGMA reports (*Q*) that if temperature rises too much in the grinding mills, copper recovery falls, the action being attributed, tentatively, to overoxidation of bornite. Few plants heat pulp, the principal instances of such practice being at the copper-gold plants in northern CANADA, in conditioning for sphalerite flotation in lead-zinc differential work, and in destroying collector coatings on copper concentrate in molybdenite-copper differential operations. ALDERMAC reports optimum flotation at 80° F. NORANDA reports that at temperatures above 86° F. differential work is poor, reagent consumption increases, and gold recovery falls. At DOME (*143 #3 J 45*) rise in temperature of pulp increases recovery of pyrite but not of gold. Similar action on pyrite was observed at PECOS (*IC 6605*). At BASE METALS MINING CORPORATION (*Tref 5/42*) temperatures are 56° F. in lead roughing, 42° in lead cleaning, 61° in zinc roughing, and 90° in zinc cleaning. Diesel-engine cooling water is used for heating. The low temperature in the lead cleaner, to drop zinc, is the natural corollary of the high temperature in the zinc cleaner. At CONSOLIDATED M. & S. (*131 J 315*) temperatures are 82° F. in the lead rougher, 85° in the zinc rougher and cleaner and in the lead cleaner and recleaner, and 95° in the zinc recleaner; 12,000 lb. live steam per hr. is required for heating the pulp. Grade of zinc concentrate rises with temperature (*Q*). POTOSI reports (*Q*) that at winter temperatures flotation of zinc decreases in the zinc circuit, while iron tends to float therein, the lead circuit being unaffected. Heat has been used in pilot-plant operations in which galena was depressed by chromate. In most cases, however, much or all of the improvement that can be effected by heating can be more cheaply obtained by increase in quantity of reagent or time-factor.

Wark and Cox (*134 A 47*) report that in the absence of copper ion, both cyanide and alkali are more active as depressants with xanthate collectors at 95° F. than at 40° F. They report also that the contact angle with given reagents is independent of temperature over the above range. Flotation rate at 100° F. is twice that at 43° F. (*IC 6784*); optimum temperature varies with the ore but ordinarily lies in the range of 73° to 100° F.

Temperature in agitation-froth machines has an important additional influence due to its effect on vapor pressure of the water and partial vapor pressure of the dissolved air. The speed of gas precipitation increases, all other things being equal, with increase in these pressures and they, in turn, increase parabolically with increase in temperature. Hence both capacity and recovery are increased with temperature rise. No such effect is, of course, present in bubble-column machines, but even in these, summer performances are better than winter, owing, no doubt to improved conditioning.

At PECOS (*loc cit.*) blower intake was placed under the roof and condenser water was used for make-up in order to hold temperature constant winter, summer, day and night.

39. EQUIPMENT

Machines are not, of course, an operating variable in the sense that the type of action can be changed at will, but in modern machines there is considerable operating control of intensity of machine action and not a little control of the duration of treatment of underflow and overflow respectively. Thus all bubble-column types, whether straight pneumatic or subaeration, permit control of intensity of treatment of underflow by control of air supply, the more air introduced, in general, the greater the total of the upward impulses on any particular particle in the pulp and the greater the likelihood that it will discharge in the overflow. There are limits to such variation, however; if aeration is too restricted, the bubble column breaks down, there is little overflow, and recovery suffers, although grade of concentrate is improved; if aeration is too intense, either the excessive boiling of the pulp destroys the bubble column mechanically or, if a bubble column is maintained, the excessive return of gangue lowers grade of overflow. Time-factor for underflow and

overflow, at a given intensity, are dependent, in that increase in time of treatment of underflow, which is attained by raising pulp level, results in a corresponding decrease in depth of bubble column and in time for cleaning overflow. Independent control of cleaning time may, however, be obtained by the use of crowding boards or by counterflow discharge of froth. It should be noted also that the time of treatment of overflow varies inversely with change in intensity.

40. CONSTANT CONDITIONS

Constancy of operating conditions is almost as important as the initial determination of optimum conditions. It should be apparent by this time that there is a high degree of interdependence between the various elements of a flotation operation and that quantified expression of the effects of a change in one variable on another is not possible in the present state of knowledge. Hence adjustment to compensate for change in an operating condition is usually a matter of trial and error in the mill and frequently calls for laboratory help. Meantime grade and/or recovery suffer.

Experienced operators have a collection of rules of thumb that they employ to correct easily visible faults. Increase in tailing assay (indicated ordinarily by vanning) is countered by dumping in more collector. If, however, differential work is involved, this upsets the balance between collector and depressants. In this case frothing may be increased, either by increase in frothing agent or in air supply; both tend to lower concentrate grade, and the latter may also lower recovery by mechanical disturbance of the bubble column. Increase in feed rate is usually met with more than proportionate increase in collector, rise in pulp level, and by either or both of the alternative expedients for combatting tailing loss.

At Potosi (*IC 6706*) variation in *p*H caused variation in frothing. At Mt Isa (*IC 7073*) change to mine water made it necessary to increase all reagents, particularly the frother (*AC 31*); if, however, mine-water make-up was added to the tailing pond, the difficulty was obviated.

When fluctuation in character of ore supply is inevitable, attempt is usually made to devise a pilot of some kind and prescribe adjustments in terms of the showing of the pilot. Thus at Consolidated M. & S. (*131 J 315*) a Wilfley table is inserted in the stream of lead recleaner tailing and the supply of collector oil is raised or lowered according to the width of the lead streak on the table; another table is available for testing the feed to the zinc rougher.

41. CLEANING

Cleaning in froth flotation is effected by refloating rough or primary concentrate, usually in a much more dilute pulp than that present in the rougher machine. The conditions in this refloated pulp differ materially from those prevailing in the original pulp. Activators and depressors in solution are substantially reduced in concentration unless further addition thereof has been made, which is unusual. The *p*H will have moved toward neutral, though not to a great extent so far as *p*H number is concerned. Collector concentration in solution is very low. Concentration of frother is substantially higher, owing to the marked initial adsorption in the bubble films and the build-up that occurs in the rougher because of capacity of froth to hold up the frother dropped by bursting bubbles. The slime content of the solid is proportionately low and the collector-coated mineral correspondingly high. The desideratum is to keep the liquid-solid volumetric ratio in the froth high so as to encourage dropping of all lightly held grains, such as large gangue that has been trapped mechanically in rougher froth, and middling containing only small specks of valuable mineral. Aeration must be restricted to compensate for excess of frother, but it should otherwise be the maximum possible in order to maintain high liquid content. The bubble layer should be deep to give time for draining. Coalescence should be active to enforce frequent transfer of bubble loads and encourage bubble-column action, even in agitation-froth machines. Froth should be removed promptly in order to prevent overloading. Air distribution should be as even as it is possible to effect. When overloading tends to occur, it can sometimes be corrected by restricting overflow length in such a way as to cause more rapid draw from the areas that tend to overload. Spraying the froth with fresh water or even with water containing a wetting agent tends to raise grade of concentrate by encouraging coalescence and keeping bubble walls thick.

Countercurrent cleaning, used with pneumatic cells, comprises building up the sides of the cell at the tail end so as to force the low-grade froth to flow back toward the head end in order to overflow. Additional draining time is thus afforded for draining back of gangue.

42. FLOCCULATION

Flocculation in an ore pulp has long been considered an index of floatability, the vagueness of the statement being no greater than that of the ideas underlying it. Recently (1930's) the Bureau of Mines publications have set forth selective or differential flocculation of the mineral to be floated as the condition precedent to successful flotation. This comes nearer the truth than the older legend, but is still inaccurate and undependable. The difficulty flows from the fact that the floccules or particle aggregates in mineral pulps form from a variety of causes, only some of which are, at the same time, causative of selective flotation.

The aggregation which gave rise to the flocculation legend was partial or restricted levitation of granular oil-coated sulphides, the aggregates comprising a number of such sulphide particles bound together into grapelike clusters by inter-particle bubbles of microscopic size. Such aggregation or agglomeration is a characteristic result of thick-pulp selective oiling of deslimed pulps, or of high-speed agitation with oily collectors of similar pulps of medium solid content, with restricted aeration or without an active frothing agent; it occurs less frequently in slime-bearing pulps and then only with oily collectors; it is unknown with soluble collectors. It is limited to oiled pulps for the reason that only at oiled surfaces are contact angles high enough and bubble adhesion consequently strong enough to effect contact levitation in thick pulps or to survive violent agitation in dilute pulps. Such air-bound floccules, when brought into contact with an air-water interface, transfer their solid load to the interface with great rapidity and certainty, and hence were and are of utility in both froth and table flotation.

Selective flocculation also occurs to a certain extent with soluble collectors (*153 A 493*), and as such is indicative of successful flotation. But similar flocculation may be effected by noncollectors, in which case it has no indicative value. In neither case are the floccules air-bound. They have no utility. They simply flow from the fact that the particle surfaces are not in the ionized state that prevents flocculation (Art. 7).

Overoiling of a sulphide pulp containing a gangue also susceptible from any cause to oil-coating, causes nonselective air-bound flocculation of the entire pulp, all of which will float when suitable aeration is effected.

43. ATTENDANCE

Operation of flotation processes requires a higher class of labor and more careful and intelligent supervision than does any other operation in a concentrating mill. This is due to the fact that successful operation involves harmonizing many different elements, and it is substantially impossible to formulate simple rules that set forth the proper things to do under the multifarious conditions that arise. Even in the laboratory, where conditions are under the best possible control, skilled and unskilled operators working from the same set of instructions and with the same materials will obtain results differing greatly in recovery and concentrate assay, and yet the differences in the things they do are very slight and are differences of degree rather than of kind. The early results obtained in any plant are almost invariably poorer than those attained at a later date, notwithstanding that the elements of the operation have not, in so far as they are capable of definition, substantially changed. It is not, of course, to be understood that any mystery is involved, but rather that control of the magnitude or intensity of essential operating factors and judgment of results are matters that must be gained by intelligent observation and experience, all of which may be summarized in the statement that in the present state of knowledge flotation is an art rather than a science, despite the great strides that have been made in understanding of the underlying mechanism.

Pilot apparatus is a marked help to operators, and is usual equipment in differential mills. Shaking tables are normally employed. At PECOS (*IC 6605*) a dark-colored gangue made it difficult to read the concentrate streak on the pilot table at night; a small air-lift cell was put in ahead of it and the froth therefrom—free of the obscuring gangue—was sent to the table. Oxide content of ore and degree of grind are followed on the pilot table at MIDVALE (*IC 6492*). When, as at MT. ISA (*IC 7073*), losses are in the finest slimes, pilot tables are not satisfactory; there it was found that tailing assay correlated with grade of concentrate and control was based on quick assays (20 to 30 min.). At BRITANNIA (*IC 6619*) quick assays of key products are made three times per shift. Hourly colorimetrics were made at COPPER QUEEN (*IC 6404*).

44. COST

Cost of flotation varies widely according to the ore and to the scale of the operation. The elements are power, maintenance, reagents, and labor.

Power consumption depends principally on the amount of cleaning done. Consumption per ton of ore in roughing for each mineral in a pulp containing 30% solids ranges from 0.5 to 2.25 hp-hr. in matless cells, 0.75 to 3.0 hp-hr. in mat-type pneumatic cells, about the same in subaeration, and from 1.5 to 5 hp-hr. in agitation-froth machines. The lower figures correspond to rapid-floating ores and large machines. Cleaning is normally done more slowly than roughing and usually in more dilute pulps. Hence power consumption per ton of solid treated in cleaners is higher. If the ratio of concentration in roughing is low the additional consumption per ton of rougher feed for one stage of cleaning may equal that for roughing, but normally it ranges from about 20% for ores with low content of floatable mineral to 50 or 60% with highly mineralized ores; each successive cleaning stage will add 50 to 100% as much as the preceding. Each scavenging stage will normally add 50 to 100% of the consumption of the preceding stage. Consumption at copper concentrators (*IC 6792*) averaged about 2 hp-hr. per ton total for air-lift machines, 2.5 to 3.5 for mat-type, and 4 to 6 for agitation-froth. At lead-zinc concentrators the treatment of the primary stream is doubled and more cleaning is usual; the reported figures for consumption range from 6.2 to 26 hp-hr. per ton (*IC 6776*). Costs of power (1930) ranged from 0.15 to 1¢ per hp-hr. with the majority clustering about the range 0.7 to 0.9¢.

Maintenance is relatively low in all modern bubble-column machines; it is least in matless cells and greatest in the high-speed subaeration machines. It should not, however, amount to more than 5% of the total flotation cost.

Reagent costs are best estimated from current quotations on the chemicals prescribed. For rough estimates on simple sulphide ores the following approximations will apply: collector, 0.1 lb. @ 15¢ per lb.; frother, 0.1 lb. @ 10¢ per lb.; conditioner, 1 lb. @ 1 to 2¢ per lb. (1937 prices). For simple two-mineral separations, double these figures and add 25 to 100% for depressants and activants. For difficult complex ores add 50% to the preceding maximum. Costs in 1930 ranged from 2 to 13¢ per ton for copper (*IC 6792*) and from 12 to 38¢ for reagents and maintenance supplies for lead-zinc ores (*IC 6776*).

Labor cost varies greatly according to the difficulty of flotation, the scale of operation, and union exactions. In large plants treating simple ores one operator can readily handle machines treating 2,000 to 5,000 t.p.d., if they are not too scattered, and ore and reagent feed conditions are regular. On the same treatment scale with a complex or difficult ore, particularly if ore feed is irregular in composition, one man will rarely be able to handle machines carrying more than 1,000 t.p.d. In small mills treating simple ores one man can operate all of grinding and flotation, if the plant is compact. From the practical standpoint, however, it is usually necessary to hire two to three times these minimum numbers of men for the job, and labor cost will range (1940) from 2 to 3¢ per ton in large mills in which the cells practically run themselves to 25¢ or more in small mills treating difficult complex ores. A rough labor estimate may be made by equating the item to the power estimate.

Total flotation costs (1940) for sulphide ores, on the above basis, range from 6.5 to 75¢ per ton, depending on the complexity of the operation and the tonnage treated. As a very rough figure estimate power, set labor equal thereto, and take the combined cost as 30 to 50% of total for lead-zinc separation and as 50 to 75% for copper plants. These figures check with such costs as are available from annual reports and private communications.

Costs for the period around 1930 as summarized from the Information Circulars of the U. S. Bureau of Mines ranged, for copper ores, from 4¢ per ton for slime flotation at BRITANNIA to 24¢ at SHERRITT-GORDON (*IC 6792*). The costs at the porphyry coppers was 8 to 10¢. Cost for floating straight lead and straight zinc ores runs about the same as for copper. Lead-zinc differential work (1930) ranged from 23¢ at BUNKER HILL & SULLIVAN to 50 or 60¢ at smaller plants where pyrite was present or where precious-metal values required additional scavenging.

Costs for nonmetallic flotation must be estimated in more detail, since reagent practice is not yet standardized and experienced skilled operators are not generally available.

FLOTATION FLOWSHEETS

Flotation flowsheets have four elements, *viz.*, (1) the types of operations to which the ore is subjected; (2) the order of these operations; (3) the apparatus employed; and (4) the reagent dosage. From the standpoint of record and comparison however, the first two of these are the important features; differences in apparatus are of compensatory character, and reagent dosages are so nearly standardized for most ore types that only the departures therefrom justify recording.

The usual form of presentation of a flotation flowsheet shows the machines in some diagrammatic fashion with flow lines chasing back and forth from one cell to another and off to the periphery to accessory grinding machines, classifiers, thickeners, and the like to an extent that makes a newspaper pencil maze look like a simple figure. Yet actually most such flowsheets comprise but two, rarely three or four, complementary operations applied to each of the mineral species floated. The unit block of two operations is always required because of the fundamental inability of all concentrating machines to make finished concentrate and finished tailing in one and the same operation. Hence every complete treatment scheme shows at least these two operations.

Key to flowsheets. The flowsheets herein presented are condensed according to a scheme which gives a graphic picture of the general type of treatment at a glance and an accurate story of the flow on closer examination. The basis of the scheme is that each concentrating operation which makes two products comprises a STAGE which can be represented by a long horizontal dash, thus ——. This stage may be the whole or a part of a pneumatic cell, or one or 20 successive cells of a subaeration machine; the test is that it makes two and only two products. The overflow product of any stage is conceived as flowing down the page; if it is finished concentrate, that fact is designated by a short dash below the long dash thus ——· If more than one concentrate is made in the entire treatment, a small capital letter designates the kind of concentrate, *e.g.*, ——$_{L}$ = lead. If the overflow product is reconcentrated (CLEANED), such an operation comprises another stage and is denoted by a second dash below the first or ROUGHER stage, thus ——. Flow of underflow of all stages is presumed to be to the right, along the same horizontal level of the paper. If the underflow product of the rougher stage is finished tailing, that fact is indicated by a pair of short vertical parallel lines placed at the end of the rougher dash, thus ——‖. If, on the other hand, the rougher underflow is subjected to another flotation treatment for the same mineral (SCAVENGED), that fact is represented by a second dash following the first, thus —— ——. Stages are assigned numbers beginning with 1 for the first or rougher stage, and continuing through all successive stages treating the primary pulp stream, thence through the stages (not necessarily successive) treating primary overflows, thence through the stages treating overflows from primary cleaners, etc. These numbers are placed above the stage dashes, thus $\frac{1}{——}$, designating the primary rougher. (See also any flowsheet in Fig. 58.) When a stream from any stage is routed other than to an adjacent stage, that fact is indicated by a small numeral placed adjacent to the stage in the proper flow line, thus $\frac{5}{——3}$ indicates an overflow from stage 5 returned to stage 3 and $\frac{2}{——}1$ denotes underflow from stage 2 returned to stage 1. Accessory equipment is indicated by signs as below, the equipment is referenced by numbers in the same way as the flotation stages; nonadjacent destinations of the products are similarly designated.

⊙ Grinding circuit. ⌀ Conditioner.

Deslimer. ←→ Gravity concentrator.

⊠ Dewaterer. Ⓐ Aerator.
W

45. FLOWSHEET TYPES

The flotation flowsheets of Sec. 2 are summarized in Fig. 58. Examination shows that there are but two fundamental elementary patterns in all of the flowsheets, *viz.*, $\frac{1}{——}\frac{2}{——1}\|$ (No. 2), and $\frac{1}{——}\|$ (No. 13). In the first of these, known as ROUGHER-SCAVENGER flow, final concentrate is made in the rougher and final tailing in the scavenger; scavenger froth is counterflowed to the rougher. In the second, called ROUGHER-CLEANER flow, final tailing is made on the rougher, final concentrate on the cleaner, and cleaner tailing counterflows to the rougher. Roughers may be multiplied, as in 10; scavengers, as in 7 and 10; cleaners, as in 16 and 18 and, to an exaggerated degree, as in 37. Counterflow is usually one-stage, but may skip back several stages (37). The principle ordinarily followed in counterflow is to return the stream to the point where its assay value and water composition are nearest those of the stream that it joins, thus avoiding, so far as possible, change in composition of either stream on mixing. Flow 1 is designated SCALPING; flows 3 and 4 then constitute scalping followed by rougher-cleaner flow with one- and two-stage cleanings respectively. Item 6 is simply two successive rougher-scavenger flows with intervening regrind. Item 9 is simple rougher-scavenger flow for lead, rougher-two scavenger flow for zinc, and pyrite scalping of zinc-circuit tailing. Flow 21 represents a favorite combination which may be looked upon as scavenging a rougher-cleaner tailing or cleaning a rougher-scavenger concentrate. Item 26 is the same combination with one more cleaning stage. Item 30 is simply item 16 in the lead circuit and item 26 in the zinc circuit; item 32 is item 26 in the lead circuit and item 18 plus a scavenger in the zinc circuit. Item 38 is a good example of

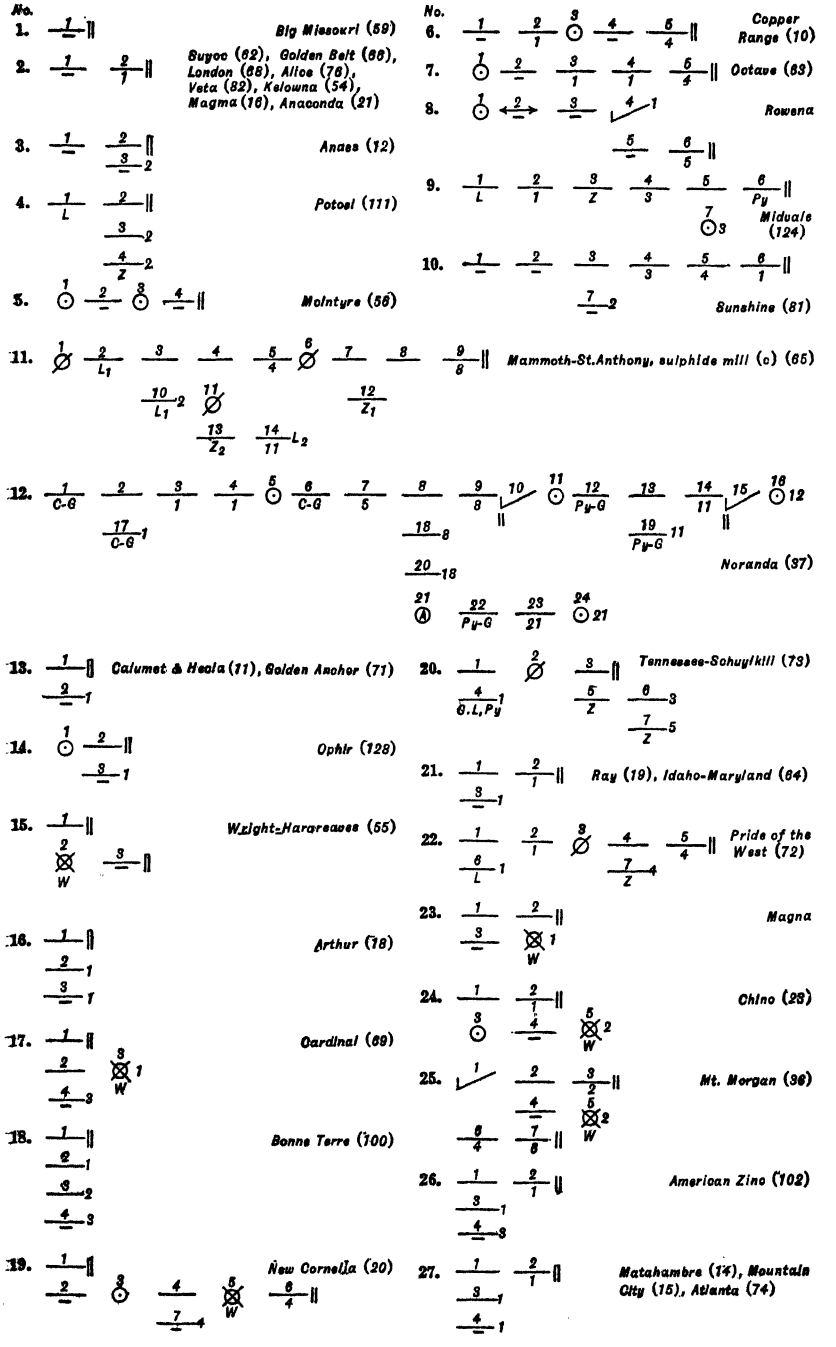

FIG. 58. Flowsheets for flotation of metalliferous ores. *a*, *b*

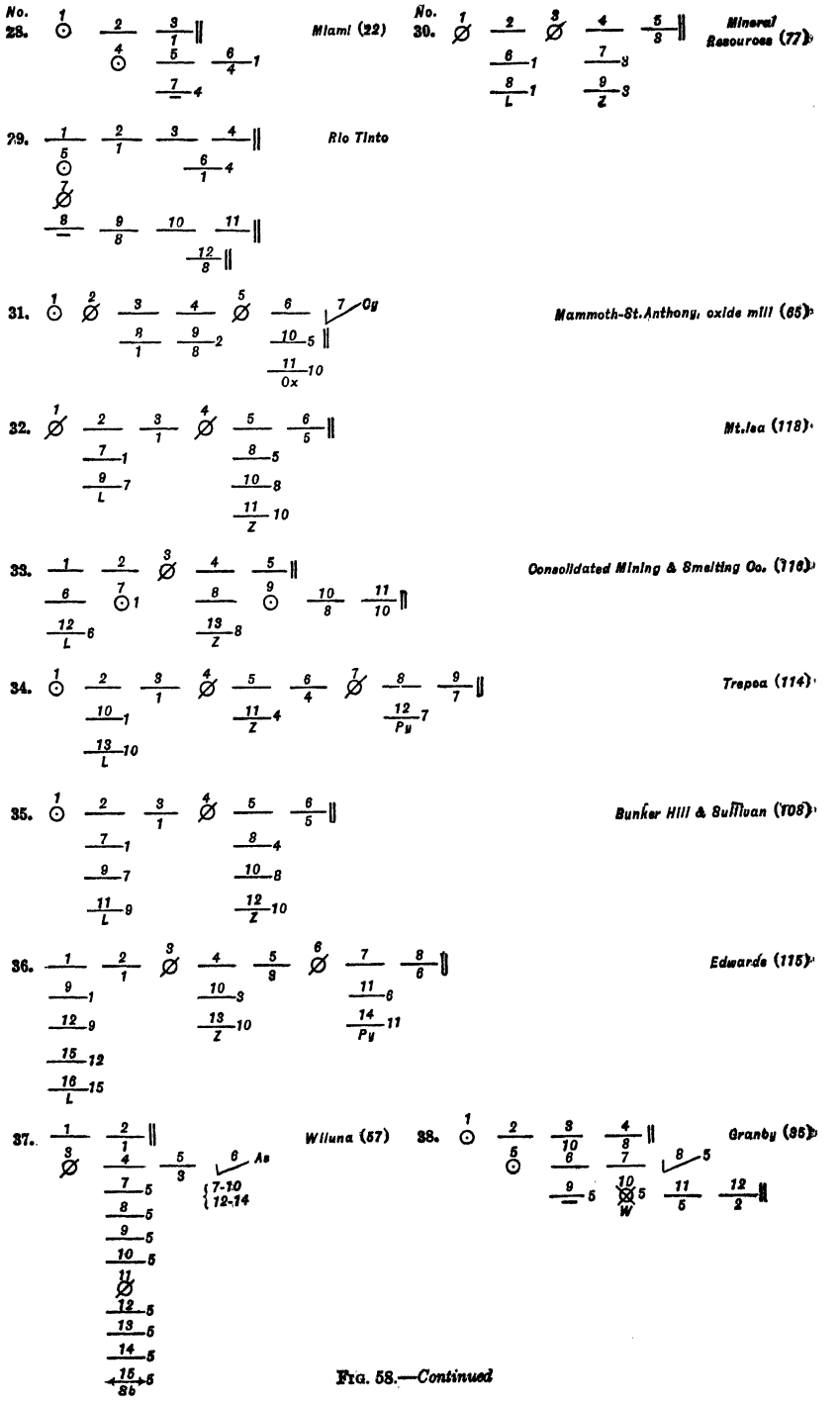

FIG. 58.—*Continued*

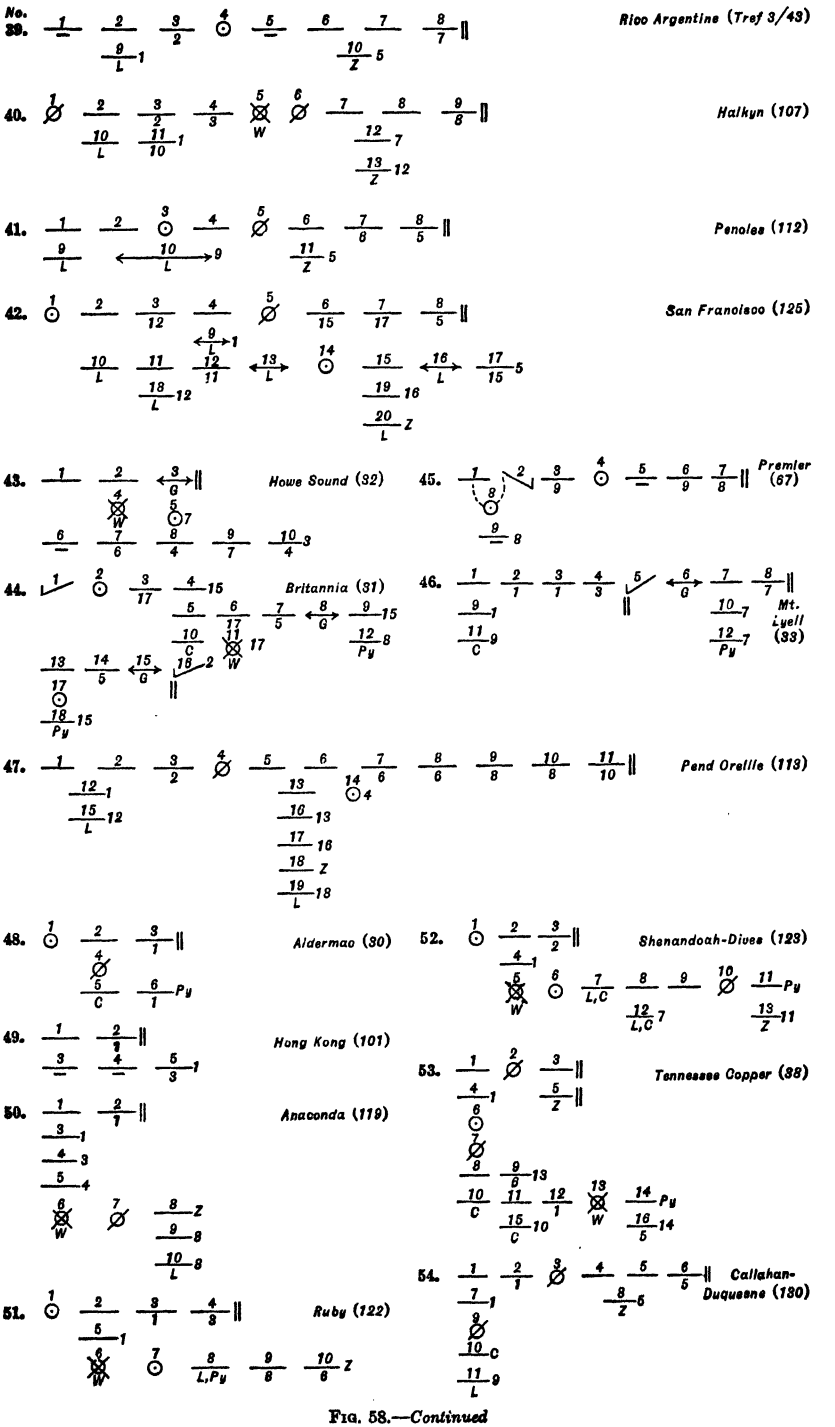

FIG. 58.—*Continued*

NOTES TO FIG. 58.

a Numerals in parenthesis following names of plants indicate figures in Sec. 2 at which mill descriptions are to be found.

b For explanation of flowsheet form see p. 103.

As = arsenic, C = copper, Cy = to cyanidation, G = gold, L = lead, Ox = oxide, Py = pyrite, Sb = stibnite, W = water, Z = zinc.

c The zinc sulphide is of two different varieties, with different colors; one depresses normally with cyanide; the other is not depressed in 1% cyanide solution nor in strong solutions of sulphites or sulphur dioxide. In the flowsheet shown, cyanide, zinc sulphate, and 0.04 lb. thiocarbanilid are added at the ball mill, cresylic acid at conditioner 1, Aerofloat 31 (0.08 lb.) at stage 4, lime and copper sulphate at conditioner 6, Z-5 xanthate in stages 7 and 9, and a 14 : 1 mixture of sodium dichromate and sodium metasilicate in aqueous solution in conditioner 11 (*A TP* 1714). Assays and recoveries at different points in the flow are shown in the accompanying table:

Material	Lead		Zinc	
	Assay, %	Weight, %	Assay, %	Weight, %
Feed	6.63	100.0	7.57	100.0
Concentrate L_1	65.50	55.2	8.04	5.6
Tailing of stage 3	3.21	.....	7.67	.....
Concentrate of stage 4	22.30	30.2	35.00	45.6
Tailing of stage 5	1.10	.....	4.55	.....
Concentrate Z_1	4.70	7.2	42.30	34.0
Final tailing	0.63	7.4	1.45	14.9
Concentrate L_2	45.50	24.4	12.85	6.8
Concentrate Z_2	7.70	5.8	47.10	38.8
Lead concentrate ($L_1 + L_2$)	54.98	79.7	9.73	12.3
Zinc concentrate ($Z_1 + Z_2$)	6.80	12.9	44.46	72.8

scavenging in the cleaner circuit; this practice usually involves regrind of rougher concentrate, either before cleaning (29) or after scalping (19), and tailing may be made on the cleaning stream (19, 38) or cleaner tailing counterflowed (28). Regrind of rough concentrate reduces grinding by permitting roughing at coarse size, with discard of coarse tailing, but it requires a coarse enough dissemination to at least insure exposure of all mineral at a size above that at which economic maximum severance is effected.

Primary-slime separation is illustrated in items 25 and 44. This practice is adopted when the character of the slime is such as to harm flotation. The flows are designed to reclaim such values as possible from the slime and then get it out of the system; thereafter the now deslimed concentrate may be admixed with sand concentrate for cleaning without harm.

Choice of flowsheet is based primarily on the prevailing economic elements and the character of the ore, particularly as regards dissemination and speed of flotation.

Rougher-scavenger flow is adapted to economic situations in which grade of concentrate is less important than recovery, *e.g.*, as for pyritic gold ores, particularly where concentrate is to be cyanided on the ground rather than shipped, or where sulphur is of value for acid, and/or iron yields a premium rather than incurs a penalty at the smelter (ANACONDA, MAGMA), or where nearness to the smelter makes additional freight on dirty concentrate less costly than additional cleaning. The simple two-stage form (item 2) requires a clean coarsely disseminated siliceous ore, which means rapid-floating, if properly conditioned. Finely disseminated and slow-floating ores, under the same economic conditions, require increase in scavenging.

Rougher-cleaner flow is used when grade of concentrate is important. If the ore is very easy to float or the operation is primarily scalping, the simple two-stage flow is used. Ordinarily, however, a scavenger is added, even for easily floated ore (21). The number of scavengers usually increases with the unit value of the metal.

Bulk-differential flows (items 50 to 54) differ in over-all pattern from those already discussed in that they tend to multiply scavengers on the cleaner streams. The reason for this practice is that the bulk-concentrate feed to the differential circuit is so highly concentrated in normally floatable material that very gentle flotation conditions must prevail in the concentrate-floating cells (these correspond to the roughers in a rougher-scavenger flow), and the scavenger cells on the same stream must be depended upon to pick up all of the floatable mineral to prevent its loss in the underflow concentrate of the last scavenger.

At ANACONDA (item 50), a rougher-cleaner circuit is used on the bulk concentrate; the lead is pulled hard on the differential rougher and zinc pulled with it is counterflowed from the lead cleaners. At MT. ISA (*IC 7073*) the lead-circuit scavenger (item 2, flowsheet 32) must be pulled hard in order to keep down Pb and Ag losses.

Scavenging is usually done in the same type of machine as roughing unless various types of machines have been purchased at different times in search for the best, or cheapest, in which case the scavenger is usually the oldest or least efficient. In light of the fact, however, that subaeration machines tend to favor the recovery of the coarser mineral and pneumatic that of the finer (Art. 35) it would seem to be better practice to make scavenger and rougher of different types, if the amount of value to be scavenged will more than pay for the extra installation and storeroom costs (see *124 J 289*).

SULPHIDE FLOTATION

46. SINGLE-SULPHIDE FLOTATION

This ranks with the rarer operations in flotation. Some of the southeastern Missouri lead ores contain galena as the only sulphide; MASCOT and some Joplin ores similarly contain sphalerite substantially unaccompanied by galena and pyrite; and gold-bearing pyrite is not infrequently the sole sulphide in gold ores. In substantially all other sulphide ores sulphides of more than one metal are present, and since concentrate predominating in any one valuable metal is usually penalized at the smelter for the presence of other metals, sulphide flotation, in most cases, involves not only elimination of rocky gangues but separation of one sulphide from another.

Separation of sulphide from rocky gangue, whether the sulphide is single or mixed, presents no problem nowadays as to the sulphide, provided the latter is not materially oxidized. Difficulty, if any, arises in the attempt to keep down some particular ingredient of the gangue. Clean siliceous ores are the simplest. Pulp is conditioned to a *p*H of 7 to 9, usually with lime; ethyl xanthate is used as collector and pine oil or cresylic acid as frother. Ores with clean calcareous gangues respond to the same treatment except that slightly more care needs to be taken to reduce accidental contamination by lubricants. Micaceous and other flaky gangue minerals either are coated preferentially by such lubricants or, equally coated with the other gangue minerals, they float more readily because of their smaller mass at a given grind. The usual expedients employed to keep them out of concentrate are (1) preliminary flotation with starvation quantities of frothing agent before the addition of collector, and restricted aeration; (2) conditioning for depression either with sodium silicate or with small amounts of organic colloids such as glue, casein, dextrin, or starch, and floating with a minimum of frothing agent; or (3) repeated cleaning with added conditioners of the above types. When the gangue contains considerable quantities of clay, *p*H must be controlled carefully to effect a maximum dispersion thereof, which usually occurs at a point slightly on the alkaline side; small amounts of sodium silicate or sodium sulphide added during grinding are frequently helpful, since these reagents tend to close up the sulphide surfaces and prevent slime coating by reaction (Art. 7); a small amount of creosote in addition to the usual sulphydrate collector apparently tends to film over light slime coatings and aid sulphide collection. Flotation of lightly oxidized sulphides is usually helped by the same expedients employed for clayey gangues, with, additionally, substitution or addition of a higher xanthate.

Floatability of sulphides varies principally in that some are more and some less subject to oxidation in aqueous pulps, and these oxidized surfaces vary specifically, according to the metal of the sulphide, in their capacity to form highly water-repellent reaction coatings with collector ions. The order of oxidizability of the common sulphides, under conditions such as occur in ordinary flotation pulps, would appear to be: Cu > Fe > Zn > Pb. The order of solubility of the thio-acid collector salts is Cu < Pb < Fe < Zn. Hence the order of floatability with sulphydrate collectors, in the absence of conditioning agents, is Cu > Pb > Fe > Zn. This order may be accentuated in certain cases and definitely upset in others by use of specific reagents. Thus in the presence of free Cu^{++}, sphalerite becomes nearly or equally floatable with galena; in the presence of CN^- or of a high concentration of lime the floatability of pyrite is greatly decreased; Na_2S in amounts near H_2S saturation decreases the floatability of all sulphides, but small amounts aid the floatability of pyrite and, to a lesser extent, galena, especially if the minerals are somewhat oxidized.

Floatability by size is normally fine sand > medium sand > coarse sand > very fine slime (see also Art. 35).

Cinnabar is readily floated at as coarse as 10-m. by small amounts of amyl xanthate (*RI 3564*). Lime and sodium cyanide may be used for depression of pyrite without effect on cinnabar flotation (*RI 3370*). Pulp made alkaline with sodium silicate is best so far as silicate gangue is concerned (*141 & 5 J 42*). Either pine oil, Aerofloat 15, or DP 23 is suitable for frothing (*RI 3564*). Rey (*153 A 536*) found that the small amount of H_2S generated in grinding a cinnabar ore containing realgar was a depressant for cinnabar in xanthate flotation. Mercuric chloride was a better activant for cinnabar than copper sulphate and permits the use of cyanide as a depressant for arsenopyrite.

Cobaltite, smaltite, and **erythrite** in a diabase gangue, assaying 2.6% Co, were floated with Flotagen, pine oil, and copper sulphate in an alkaline pulp, yielding 84% of the cobalt in a 17.8% concentrate (*Bul 724 CMB 80*). Response to flotation was slow (*ibid.* 160).

Copper sulphides generally are readily amenable to flotation. Recoveries normally range from 90 to 95%; sulphide tailing on clean ores should be less than 0.1% Cu. The best collectors are the xanthates, the ethyl variety having sufficient collecting power. The higher xanthates and their oxidation products (dixanthogens and polysulphides) and the higher mercaptans and thiophenols are recommended as selective against pyrite (*U. S. pat. 2,125,337*), but it is doubtful, in the light of Hassialis' work (*153 A 513*) whether the advice is good as to the xanthate oxidation products. Lime is almost universally used for *p*H control, and in larger quantities as a pyrite depressant. The iron-bearing copper sulphides (chalcopyrite and bornite) are susceptible to pyrite and sphalerite depressants, particularly to cyanide; nickel ion has been recommended for reactivation against cyanide, preferably in slightly alkaline pulp (*U. S. pat. 2,035,458*). When starch is used to depress MoS_2 in copper flotation it has a depressant effect on the copper minerals also; lead ion is said to have an activating influence under such circumstances (*U. S. pat. 2,070,076*). Relative floatabilities of the different copper minerals in UTAH COPPER CO. ores are to be inferred from the recoveries of the coarser sizes in Table 24. At ANACONDA the order of floatability is enargite > chalcocite > bornite.

Table 24. Recovery of copper sulphides in Utah Copper Co. ore (*After Martin*)

Mineral	Size, microns				
	>147	104	74	20	10
Chalcopyrite....	53	84	90	98	94
Bornite.....	18	87	91	99	94
Chalcocite.....	32	77	70	97	90
Covellite.....	54	92	96	98	93

Chalcocite; covellite. Little affected by depressants other than very high concentrations of CN^-, $S^=$ and/or OH^-. Readily collected by sulphydrates of low molecular weight (ethyl), fatty acids, and organic sulphates and sulphonates of high molecular weight.

Chalcopyrite; bornite. Less resistant to depressants than chalcocite and covellite, but more resistant to iron-mineral depressants than pyrite, *q.v.* Similarly less readily collected than the straight copper sulphides, *i.e.*, requiring somewhat stronger dosage for a given effect, but still readily floated by ethyl sulphydrates, fatty acids, and organic sulphates and sulphonates. Bornite oxidizes more readily than chalcopyrite and gives some trouble in the mills owing to over-oxidation. Chalcopyrite is depressed by cyanide in relatively low concentrations, substantially the same as required for copper-resurfaced sphalerite, while much higher cyanide concentrations are necessary to depress the other copper sulphides; hence in differential work with cyanide these other copper minerals float with the galena, while chalcopyrite is depressed with the sphalerite, and floats with it on reconditioning with copper sulphate.

Galena is activated by copper ion; under certain conditions it becomes coated with metallic copper. It is depressed by high concentration of OH^- (*p*H 10.4 with ethyl xanthate) hence sodium carbonate rather than lime is ordinarily used for *p*H control in lead circuits, in order to utilize the buffering effect of the former reagent. Galena is also depressed by low concentration of $S^=$, but not affected by CN^- or SO_3, S_2O_3, and the like. Dichromate is a strong depressant. Reactivation thereafter may be effected by reduction as with $FeSO_4$ or alkaline sulphites, or by chloridization as with HCl or NaCl in acid solution (*U. S. pat. 2,150,114*). Collected, substantially as readily as the copper minerals, by sulphydrates, fatty-acids, and sulphates or sulphonates of fatty-acid alcohols. Galena is not floated without activation by sodium Aerofloat except in highly acid pulps (*p*H = 2), but when activated by copper sulphate excellent flotation is effected.

Iron sulphides are pyrite, marcasite, pyrrhotite, and arsenopyrite. Ordinarily they are not wanted for themselves, since they lack commercial value except for acid manufacture, and cannot compete in that field with sulphur except where local markets or other special differentials act in their favor. On the other hand, certain special conditions, *e.g.*, when they are gold carriers (NORANDA; quartzitic gold ores), when they constitute otherwise inseparable impurities in concentrate (Bolivian tin), when they are a local source of arsenic, etc., may make their flotation desirable.

The iron sulphides are readily floated by fatty acids, especially in acid pulps, and by the higher xanthates in acid, neutral and even slightly alkaline pulps. The lower xanthates and the Aerofloats are not good collectors for them, particularly in pulps of reducing character (see *post*). Partially oxidized auriferous pyrite should be sulphidized, after an initial float for free gold; mercapto-benzo-thiazole is recommended for flotation of the sulphidized pyrite, with or without a higher xanthate or Aerofloat.

The iron sulphides are all highly susceptible to oxidation under the conditions prevailing in grinding circuits and flotation pulps. As a result, the pulp loads up with ferrous sulphate, the water is depleted of dissolved oxygen, and has strongly reducing quality. Oxidation is necessary from the standpoint of iron flotation with xanthates, since the insoluble xanthate is ferric. Ferrous sulphate is harmful to the flotation of other sulphides because it holds back the necessary oxidation of their surfaces. Arsenopyrite and pyrrhotite are the worst offenders. When the iron-sulphide content of the ore is high and flotation of sulphides other than iron is desired, it is necessary to oxidize ferrous ion or to remove it from solution. It cannot be oxidized so long as pyrite or SO_2 in solution remains (*RI 3263*). Precipitation is the usual procedure; it is effected by adding hydroxyl and/or carbonate ion to the pulp.

The order of floatability of the iron sulphides appears to be marcasite > pyrite > pyrrhotite. Wark and Cox (*112 A 200*) report that pyrrhotite is not coated by ethyl xanthate without resurfacing by copper sulphate.

Usually the aim is to depress iron sulphides. Cyanide ion is a powerful depressant for pyrite. The most powerful depressant combination which yet will permit flotation of other sulphides is a high-lime alkalinity with a small amount of cyanide ion. The cyanide may be omitted when, as with copper-iron or zinc sulphides, it tends to depress these associated minerals. Wark and Cox (*112 A 220*) postulate that the effect of high alkalinity and of the addition of cyanide ion is to lower the concentration of ferric ion so greatly that the solubility product of ferric xanthate is not exceeded. Sulphite ion is also a depressant. Pyrrhotite may be depressed by starch (*140 #2 J 75*). Pyrite is strongly depressed by *p*-aminophenol, which forms colloidal sols with iron salts; by phenol-sulphonic acids; by gelatin; by tannic acid and similar substances (formation of adhering and water-avid tannates and the like). Ferric sulphate is also a depressant on the acid side, although not so powerful as the ferrous salt; it is speculated that the pyrite particles become coated, even in the presence of collector, with ferric-hydroxy sol or with a layer of basic-ferric-sulphate slime (*RI 3263*), while on the alkaline side the ferric compounds flocculate and precipitate out. Arsenopyrite is reported by Wark and Cox (*134 A 45*) to respond to cyanide in the same way as pyrite when copper ion is present; in the absence of copper, however, cyanide does not affect arsenopyrite. They report a critical *p*H value of 7 for arsenopyrite with 25 mg. per li. of potassium ethyl xanthate. Lime is reported to be a better depressant than cyanide for arsenopyrite (*141 #5 J 40*). Parsons (*123 J 932*) reports that soda ash has a marked depressant effect on pyrrhotite. When flotation of pyrite in alkaline pulps is desired soda ash is used for *p*H control.

Parsons (*123 J 931*) states that soda ash is of use in reactivating pyrite that has been depressed by a cyanide-high lime mixture. Sulphide ion is sometimes used for the same purpose.

Linneite (Co–Ni·CuS) is reported (*135 J 401*) readily floated with soda ash (0.8 lb.), ethyl xanthate (0.5 lb.), and pine oil (0.1 lb.), yielding 26% Co–Ni concentrate and 0.18% tailing from a 2.2% ore.

Molybdenite is the most readily floatable of all the sulphides. It is floated at CLIMAX with a saturated hydrocarbon as the sole collector and can be refloated with the same reagent, even after depression with an organic colloid, such as starch (*U. S. pat. 2,070,076*). It floats with the copper minerals with lower-xanthate collectors and pine oil, and floats preferentially to pyrite in the presence of sodium silicate with starvation amounts of pine oil (0.03 lb. per ton) as the sole added reagent. Gaudin *et al.* (*112 A 319*) report that flotation is not markedly enhanced by xanthates; tests at Columbia University indicate that it is not coated by xanthate at all. It is depressed in copper ores by starch, glue, and other organic colloids added in controlled quantities (*U. S. pat. 2,070,076*). "Condensation products of aldehydic substances (formaldehyde, acetaldehyde, butyraldehyde) with aromatic sulphonic acids (sulphonic acids of alkylated and nonalkylated aromatic hydrocarbons such as benzene, xylene, naphthalene, etc.), and the salts of these products with salt-forming bases" are also recommended as depressants (*U. S. pat. 2,187,930*), but commercial use is not reported. Differential separation from copper is effected by making a bulk float, decomposing the xanthate coatings on both minerals by steaming (*143 #2 J 80*) or by dry heating and refloating the molybdenite with pine oil ± small amounts of kerosene (MIAMI, UTAH, CHINO). Xantho-molybdic acid is recommended as a selective collector (*U. S. pat. 2,148,475*). Marsh (*U. S. pat. 2,316,743*) recommends differential flotation of molybdenite from other sulphides by use of a mixture of C_6–C_{10} aliphatic alcohols, fuel oil, and pine oil (approx. 4 : 4 : 2 respectively). He notes that in such flotation lime in excess of $^1/_2$ lb. per ton is harmful but that soda ash producing even higher alkalinity is not.

Molybdenite, owing to its softness, acts like graphite in coating gangues by smearing, whereupon such coated gangue particles float and lower grade of concentrate; use of

sodium silicate tends to prevent the coating or to detach and disperse the adhering particles, and thus raise grade.

Realgar floats readily with a neutral hydrocarbon oil as collector. It requires activation by a heavy-metal salt for flotation with xanthate; this activation hinders flotation with hydrocarbon collectors. Dextrin is a depressant.

Silver sulphides are argentite; the arsenic- and antimony-sulphur compounds polybasite, proustite, pyrargyrite, and stephanite; and silver-bearing tetrahedrite, tennantite, and galena. Leaver and Woolf (*RI 3436*) made an extensive study of the behavior of pure-mineral mixtures of these (exclusive of tennantite and galena) with clean siliceous and with slimy gangues. Their findings were that argentite, polybasite, and tetrahedrite are all readily floated by ethyl xanthates and Aerofloat 15, and that recoveries were not affected by sufficient amounts of lime to depress pyrite. Pyrargyrite floated with the lower sulphydrates in neutral circuit but was depressed by small quantities of lime. Proustite and stephanite required higher xanthates (amyl) for efficient flotation and were both affected adversely by lime. Iron oxide slimes were generally bad, if dispersed, because they lowered concentrate grade unless frothing was decreased, and they lowered recovery when frothing was decreased. Talcy slimes lowered recovery when they were flocculated by lime. Both slimes could be depressed by starch; but such depression lowered recovery with all the minerals except tetrahedrite. Sodium sulphide, which is often used with oxidized gold ores, consistently lowered recovery, even in low concentrations.

Tennantite is similar to tetrahedrite and the Leaver and Woolf tests on the latter may be considered indicative of the probable behavior of the former.

Galena is not appreciably affected in flotation behavior by silver content.

Mill practice with silver sulphides is to use powerful sulphydrate collectors, and lime, and, if necessary, cyanide to depress pyrite. If pyrite depression raises tailing assay, use of a lower xanthate or of a cresyl Aerofloat may raise recovery without floating undue quantities of pyrite. At ELDORADO, the collectors are Aerofloats 25 and 208 (*139 #4 J 37*); at SUNSHINE (*136 J 269*), Aerofloat 25, Minerec A, and Barrett 4 were used. At LUCKY TIGER (*128 J 465*), Aerofloat plus ethyl xanthate gave maximum recovery on an ore in which the principal silver-bearing mineral was tetrahedrite.

Sphalerite, in the absence of activating ions, is floatable with fatty-acid collectors in acid pulps but not so well at higher *p*H; it is not floated by the lower sulphydrate collectors but is floated by xanthates C_8 and upward. Resurfacing is effected by all metallic ions that form less soluble sulphides than Zn does. Such resurfacing, and activation toward ethyl xanthate, are effected by As, Sb, and Pt for flotation in acid solutions (*p*H = 4 to 5), and by Ce, Pb, Cd, Cu, Ag, Hg, Bi, and Au for flotation in neutral solutions (*40 JPC 799; PF 168*). The minimum concentration of copper ion that will activate sphalerite is reported (*112 A 245*) to be 10^{-28} mols per li. It is reported (*38 JPC 13*) that one minute is sufficient for monomolecular filming at usual operating concentrations.

Sphalerite is usually a penalty product in concentrates of metals other than zinc, and zinc concentrates are penalized heavily for extraneous substances. On the other hand the mineral occurs without sulphide associates in very few ores. It must, therefore, be depressed, or floated in pulps containing depressants for other sulphides, in practically every case where it is recovered, and hence its behavior to depressants and activators is of primary importance. Usual procedures are to depress it from copper and lead minerals and to float it away from iron. Since it does not float with the lower sulphydrates without activation, activation is prevented by complexing the usual activating ions (Cu, Ag) by cyanide (Art. 8) and floating the lead and/or copper minerals with a lower xanthate or Aerofloat, then activating the sphalerite with copper ion in excess of that required to complex the remaining cyanide, when it can be floated with a sulphydrate. Lime is preferred for *p*H control; *p*H is usually held between 9.0 and 11.5. The floatability of sphalerite is increased markedly by rise in temperature. If iron is to be depressed, this is done by adding high lime, in which case a higher sulphydrate, butyl or amyl, is used for collection, or the lower molecular-weight collector is buttressed by an oil.

Cyanide is not a depressant for unactivated sphalerite in the presence of a collector for the same, such as fatty acid.

Sulphites depress sphalerite in much the same way as cyanide does, but higher concentrations are required and the operation requires close control. The action of sulphite ion is intensified by adding the sulphate or chloride of Al.

The action of cyanide ion is intensified by $ZnSO_4$. Salts of manganese, tin, nickel, etc., which, in the presence of iron, will precipitate insoluble ferrocyanides, are also recommended to be added with cyanide to intensify its action (*U. S. pat. 2,048,369*).

Ferrous sulphate is harmful in sphalerite flotation; the ferrous ion should be removed by precipitation by lime or soda ash, or it may be oxidized as by $CaOCl_2$, or removed by washing.

The iron sulphides are all highly susceptible to oxidation under the conditions prevailing in grinding circuits and flotation pulps. As a result, the pulp loads up with ferrous sulphate, the water is depleted of dissolved oxygen, and has strongly reducing quality. Oxidation is necessary from the standpoint of iron flotation with xanthates, since the insoluble xanthate is ferric. Ferrous sulphate is harmful to the flotation of other sulphides because it holds back the necessary oxidation of their surfaces. Arsenopyrite and pyrrhotite are the worst offenders. When the iron-sulphide content of the ore is high and flotation of sulphides other than iron is desired, it is necessary to oxidize ferrous ion or to remove it from solution. It cannot be oxidized so long as pyrite or SO_2 in solution remains (*RI 3263*). Precipitation is the usual procedure; it is effected by adding hydroxyl and/or carbonate ion to the pulp.

The order of floatability of the iron sulphides appears to be marcasite > pyrite > pyrrhotite. Wark and Cox (*112 A 200*) report that pyrrhotite is not coated by ethyl xanthate without resurfacing by copper sulphate.

Usually the aim is to depress iron sulphides. Cyanide ion is a powerful depressant for pyrite. The most powerful depressant combination which yet will permit flotation of other sulphides is a high-lime alkalinity with a small amount of cyanide ion. The cyanide may be omitted when, as with copper-iron or zinc sulphides, it tends to depress these associated minerals. Wark and Cox (*112 A 220*) postulate that the effect of high alkalinity and of the addition of cyanide ion is to lower the concentration of ferric ion so greatly that the solubility product of ferric xanthate is not exceeded. Sulphite ion is also a depressant. Pyrrhotite may be depressed by starch (*140 #2 J 75*). Pyrite is strongly depressed by *p*-aminophenol, which forms colloidal sols with iron salts; by phenol-sulphonic acids; by gelatin; by tannic acid and similar substances (formation of adhering and water-avid tannates and the like). Ferric sulphate is also a depressant on the acid side, although not so powerful as the ferrous salt; it is speculated that the pyrite particles become coated, even in the presence of collector, with ferric-hydroxy sol or with a layer of basic-ferric-sulphate slime (*RI 3263*), while on the alkaline side the ferric compounds flocculate and precipitate out. Arsenopyrite is reported by Wark and Cox (*134 A 45*) to respond to cyanide in the same way as pyrite when copper ion is present; in the absence of copper, however, cyanide does not affect arsenopyrite. They report a critical *p*H value of 7 for arsenopyrite with 25 mg. per li. of potassium ethyl xanthate. Lime is reported to be a better depressant than cyanide for arsenopyrite (*141 #5 J 40*). Parsons (*123 J 932*) reports that soda ash has a marked depressant effect on pyrrhotite. When flotation of pyrite in alkaline pulps is desired soda ash is used for *p*H control.

Parsons (*123 J 931*) states that soda ash is of use in reactivating pyrite that has been depressed by a cyanide-high lime mixture. Sulphide ion is sometimes used for the same purpose.

Linneite (Co–Ni·CuS) is reported (*135 J 401*) readily floated with soda ash (0.8 lb.), ethyl xanthate (0.5 lb.), and pine oil (0.1 lb.), yielding 26% Co–Ni concentrate and 0.18% tailing from a 2.2% ore.

Molybdenite is the most readily floatable of all the sulphides. It is floated at CLIMAX with a saturated hydrocarbon as the sole collector and can be refloated with the same reagent, even after depression with an organic colloid, such as starch (*U. S. pat. 2,070,076*). It floats with the copper minerals with lower-xanthate collectors and pine oil, and floats preferentially to pyrite in the presence of sodium silicate with starvation amounts of pine oil (0.03 lb. per ton) as the sole added reagent. Gaudin *et al.* (*112 A 319*) report that flotation is not markedly enhanced by xanthates; tests at Columbia University indicate that it is not coated by xanthate at all. It is depressed in copper ores by starch, glue, and other organic colloids added in controlled quantities (*U. S. pat. 2,070,076*). "Condensation products of aldehydic substances (formaldehyde, acetaldehyde, butyraldehyde) with aromatic sulphonic acids (sulphonic acids of alkylated and nonalkylated aromatic hydrocarbons such as benzene, xylene, naphthalene, etc.), and the salts of these products with salt-forming bases" are also recommended as depressants (*U. S. pat. 2,187,930*), but commercial use is not reported. Differential separation from copper is effected by making a bulk float, decomposing the xanthate coatings on both minerals by steaming (*143 #2 J 80*) or by dry heating and refloating the molybdenite with pine oil ± small amounts of kerosene (MIAMI, UTAH, CHINO). Xantho-molybdic acid is recommended as a selective collector (*U. S. pat. 2,148,475*). Marsh (*U. S. pat. 2,316,743*) recommends differential flotation of molybdenite from other sulphides by use of a mixture of C_6–C_{10} aliphatic alcohols, fuel oil, and pine oil (approx. 4 : 4 : 2 respectively). He notes that in such flotation lime in excess of $^1/_2$ lb. per ton is harmful but that soda ash producing even higher alkalinity is not.

Molybdenite, owing to its softness, acts like graphite in coating gangues by smearing, whereupon such coated gangue particles float and lower grade of concentrate; use of

sodium silicate tends to prevent the coating or to detach and disperse the adhering particles, and thus raise grade.

Realgar floats readily with a neutral hydrocarbon oil as collector. It requires activation by a heavy-metal salt for flotation with xanthate; this activation hinders flotation with hydrocarbon collectors. Dextrin is a depressant.

Silver sulphides are argentite; the arsenic- and antimony-sulphur compounds polybasite, proustite, pyrargyrite, and stephanite; and silver-bearing tetrahedrite, tennantite, and galena. Leaver and Woolf (*RI 3436*) made an extensive study of the behavior of pure-mineral mixtures of these (exclusive of tennantite and galena) with clean siliceous and with slimy gangues. Their findings were that argentite, polybasite, and tetrahedrite are all readily floated by ethyl xanthates and Aerofloat 15, and that recoveries were not affected by sufficient amounts of lime to depress pyrite. Pyrargyrite floated with the lower sulphydrates in neutral circuit but was depressed by small quantities of lime. Proustite and stephanite required higher xanthates (amyl) for efficient flotation and were both affected adversely by lime. Iron oxide slimes were generally bad, if dispersed, because they lowered concentrate grade unless frothing was decreased, and they lowered recovery when frothing was decreased. Talcy slimes lowered recovery when they were flocculated by lime. Both slimes could be depressed by starch; but such depression lowered recovery with all the minerals except tetrahedrite. Sodium sulphide, which is often used with oxidized gold ores, consistently lowered recovery, even in low concentrations.

Tennantite is similar to tetrahedrite and the Leaver and Woolf tests on the latter may be considered indicative of the probable behavior of the former.

Galena is not appreciably affected in flotation behavior by silver content.

Mill practice with silver sulphides is to use powerful sulphydrate collectors, and lime, and, if necessary, cyanide to depress pyrite. If pyrite depression raises tailing assay, use of a lower xanthate or of a cresyl Aerofloat may raise recovery without floating undue quantities of pyrite. At ELDORADO, the collectors are Aerofloats 25 and 208 (*139 #4 J 37*); at SUNSHINE (*136 J 269*), Aerofloat 25, Minerec A, and Barrett 4 were used. At LUCKY TIGER (*128 J 465*), Aerofloat plus ethyl xanthate gave maximum recovery on an ore in which the principal silver-bearing mineral was tetrahedrite.

Sphalerite, in the absence of activating ions, is floatable with fatty-acid collectors in acid pulps but not so well at higher *p*H; it is not floated by the lower sulphydrate collectors but is floated by xanthates C_8 and upward. Resurfacing is effected by all metallic ions that form less soluble sulphides than Zn does. Such resurfacing, and activation toward ethyl xanthate, are effected by As, Sb, and Pt for flotation in acid solutions (*p*H = 4 to 5), and by Ce, Pb, Cd, Cu, Ag, Hg, Bi, and Au for flotation in neutral solutions (*40 JPC 799; PF 168*). The minimum concentration of copper ion that will activate sphalerite is reported (*112 A 245*) to be 10^{-28} mols per li. It is reported (*38 JPC 13*) that one minute is sufficient for monomolecular filming at usual operating concentrations.

Sphalerite is usually a penalty product in concentrates of metals other than zinc, and zinc concentrates are penalized heavily for extraneous substances. On the other hand the mineral occurs without sulphide associates in very few ores. It must, therefore, be depressed, or floated in pulps containing depressants for other sulphides, in practically every case where it is recovered, and hence its behavior to depressants and activators is of primary importance. Usual procedures are to depress it from copper and lead minerals and to float it away from iron. Since it does not float with the lower sulphydrates without activation, activation is prevented by complexing the usual activating ions (Cu, Ag) by cyanide (Art. 8) and floating the lead and/or copper minerals with a lower xanthate or Aerofloat, then activating the sphalerite with copper ion in excess of that required to complex the remaining cyanide, when it can be floated with a sulphydrate. Lime is preferred for *p*H control; *p*H is usually held between 9.0 and 11.5. The floatability of sphalerite is increased markedly by rise in temperature. If iron is to be depressed, this is done by adding high lime, in which case a higher sulphydrate, butyl or amyl, is used for collection, or the lower molecular-weight collector is buttressed by an oil.

Cyanide is not a depressant for unactivated sphalerite in the presence of a collector for the same, such as fatty acid.

Sulphites depress sphalerite in much the same way as cyanide does, but higher concentrations are required and the operation requires close control. The action of sulphite ion is intensified by adding the sulphate or chloride of Al.

The action of cyanide ion is intensified by $ZnSO_4$. Salts of manganese, tin, nickel, etc., which, in the presence of iron, will precipitate insoluble ferrocyanides, are also recommended to be added with cyanide to intensify its action (*U. S. pat. 2,048,369*).

Ferrous sulphate is harmful in sphalerite flotation; the ferrous ion should be removed by precipitation by lime or soda ash, or it may be oxidized as by $CaOCl_2$, or removed by washing.

Stibnite does not float with xanthates without activation (*112 A 319*). It is reported to be activated for such flotation by copper sulphate (*RI 3328*), and when thus activated to have the same standard curve as sphalerite (*40 JPC 799*). Lead is said (*U. S. pat. 2,052,214*) to activate it for flotation with thiocarbanilid or Aerofloat. Fahrenwald (*139 # 2 J 80*) reports that it is depressed by copper sulphate at *p*H 4 to 7.4, and by cyanide at *p*H 3.5 to 7.

47. DIFFERENTIAL FLOTATION

Differential flotation is the term used to describe flotation operations in which two or more minerals are successively floated from a pulp, or, more rarely, in which a bulk concentrate is first floated and then, after conditioning this concentrate to effect selective depression of one or more of the mineral constituents thereof, is refloated. Choice between the two methods is discussed in Art. 48. Differential flotation has been applied principally to sulphide ores. The usual separations are galena from sphalerite, and copper sulphides from pyrite; less frequently, galena from pyrite, sphalerite from pyrite, chalcopyrite from sphalerite, and galena from copper sulphides.

Certain general procedures are followed in all differential work. So long as the flotation is differential, *i.e.*, so long as one or more sulphides are to remain depressed during the flotation of another, collectors which act with a certain degree of selectivity in favor of the mineral to be floated are chosen; the molecular weight of the collector is kept down; and starvation quantities are added. Conditioning for selective flotation of the first mineral is usually effected during grinding, but Parsons (*123 J 757*) says that as much as 2 1/2 hr. contact time is allowed in some practice before lead flotation and up to one hr. before subsequent zinc flotation; in other ores the required contact times are a few minutes only. Froth is made as fragile and lively as possible without excessive loss of the mineral to be floated. Table 25 shows the comparative behaviors of common sulphides with normal concentrations of various collectors and conditioning agents.

Table 25. Collector coating and the effects of depressants on sulphide minerals, as determined by contact angles (*After Wark and Cox, 112 A 267*)

Collector	Concn., mg. per li.	Chalcopyrite *j*		Pyrite		Galena		Sphalerite *d*	
		Critical *p*H	Critical CN^- concn., mg. per li.	Critical *p*H	Critical CN^- concn., mg. per li.	Critical *p*H	Critical CN^- concn., mg. per li.	Critical *p*H	Critical CN^- concn., mg. per li.
Sodium Aerofloat	32.5	9.6	±0.01	4.1 *a*	.....	6.5	∞	*e*	.....
Ethyl xanthate (K)	25	11.8	0.4	10.5 *b*	0.1	10.4	∞	*e*	.....
Ethyl dithiocarbamate (Na,di)	26.7	>13.5	1.8	10.5 *c*	.....	>13.5	∞	6.3 *f*	*i*
Amyl xanthate (K iso-)	31.6	>13	2.4	12.3	1.7	12.1	∞	5.5 *g*	*i*
Amyl dithiocarbamate (K,di)	42.3	>13.5	±50	12.9 *c*	17	>13.5	∞	10.4 *h*	*i*

a Copper ion activates at higher *p*H values.
b Raised to 12 by 150 mg. per li. $CuSO_4 \cdot 5H_2O$.
c Response greatly decreased by 5 mg. per li. $CuSO_4 \cdot 5H_2O$ and bubble attachment completely prevented by 150 mg. per li. Probably due to impoverishment of collector by precipitation as the copper salt.
d When activated with copper behaves like chalcopyrite, but slightly more sensitive to depressants.
e No contact, irrespective of *p*H or quantity of collector up to 200 mg. per li.
f Increases to 7.8 as quantity of collector is raised to 200 mg. per li.
g Increases to 6.5 as quantity of collector is raised to 200 mg. per li.
h Increases to 11 as quantity of collector is raised to 200 mg. per li.
i Cyanide an effective depressant.
j The other copper sulphides are more resistant to depression than chalcopyrite.

Critical cyanide-ion concentrations of Table 25 are for the collector concentrations given therein. It has been pointed out that the values vary with collector concentrations, but that with normal and higher collector concentrations the floatability curve for any sulphide mineral (Fig. 59), which has the same general shape, down to the lower inflection point, as the curve of constant cyanide-ion concentration, has the same shape as that for any other sulphide mineral, in other words that this may be designated a STANDARD CURVE.

Wark and Sutherland (*134 A 53*) report, however, that when starvation quantities of collector are used, the presence of heavy-metal salts, addition of sodium carbonate, or low temperature, separately or in combination, produces ISLANDS OF NONFLOATABILITY to the left of and below the standard curve and that aggravation of these conditions causes these islands to so grow and the curve itself to become

so modified in shape and position that all resemblance to the standard condition is lost. Pyrite and pyrrhotite are most markedly affected and chalcocite least. The authors conclude therefrom that susceptibility to departure from the standard curve is a measure of susceptibility to depression, and that those conditions which, in contact-angle tests, produce most marked departure are the ones which should be applied in the cell for depression. They state further that island formation is due fundamentally to exhaustion of collector. If this is true, differential flotation becomes a clear-cut problem of the use of a collector, the heavy-metal salts of which have different solubilities according to the heavy-metal ion; the addition of starvation quantities thereof; with possibly the further addition of a soluble salt of the metal of the sulphide to be collected, and of carbonate ion.

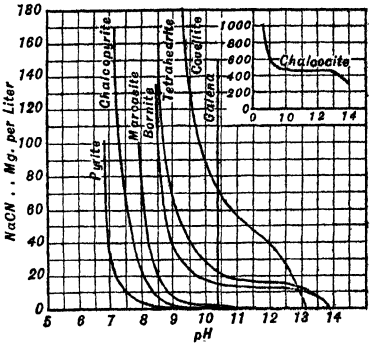

FIG. 59. Floatability curves for sulphide minerals with KEtX in the presence of CN^- and OH^- (*After Wark and Cox*).

Galena-sphalerite separation is usually performed by grinding in the presence of lime or sodium carbonate sufficient in quantity to maintain *p*H of 8 to 9.5, plus 0.1 to 0.5 lb. per ton of sodium cyanide, the amount required depending upon the amount of copper ion to be locked up and upon the alkalinity maintained. Soda ash is normally used for *p*H control, both to buffer below the critical *p*H for galena (10.4 for ethyl xanthate) and to precipitate lead as the basic carbonate and thus prevent activation of sphalerite by lead ion. Ethyl xanthate or a lower Aerofloat or thiocarbanilid is used as the lead collector, normally in very small quantities to minimize coating of sphalerite, and a small amount of wood or coal-tar creosote may also be added, the function of which is probably to smear the lightly coated galena and thereby aid bubble attachment. Occasionally chemical collectors are omitted, the minute sulphydric content of tar oils being depended upon to spread an oil coating on the galena. Frothing is usually kept to a minimum by starvation quantities of frothing agent (0.03 to 0.1 lb. per ton).

If sphalerite tends to float despite the cyanide, zinc sulphate is added; if sphalerite flotation still persists, it is wise first to examine into the lubricants employed in mining and crushing, eliminating those in the mine that are doped with fatty acids and soaps, and protecting in the mill against introduction of grease into the ore stream. At MAMMOTH-ST. ANTHONY (*A TP 1714*) the sphalerite was of two varieties so far as color and depressibility were concerned; one depressed normally, the other would not depress with cyanide or with sulphite ion. Copper minerals were dispersed in both varieties; apparently more coarsely so in the depressible one. The remedy was to float a lead-zinc middling, containing the nondepressible zinc, between the normal lead and zinc stages, and to depress the lead from this (Fig. 58, item 11).

Parsons (*123 J 759*) states that when the iron-mineral content is low, sodium bicarbonate may be preferable to sodium carbonate for lead-zinc separation.

Sphalerite is usually floated by adding sufficient copper sulphate to complex cyanide ion (Art. 7) and to activate the sphalerite. Xanthate, frequently of higher molecular weight than that used for galena, is added as collector. Frothing is made more vigorous. Leady middling may be returned to the lead circuit, but if this is done it should be well conditioned in relatively strong cyanide to deactivate sphalerite, and should usually be reground. High lime is added to keep pyrite down. If pyrite is absent, or substantially so, sphalerite may be floated with oleic acid in substantially neutral or slightly acid circuit without activation by copper, but this treatment is barred when pyrite or lime-bearing gangue is present, because these then float with the sphalerite.

Copper minerals present normally float with the galena, as do also any free silver minerals. If chalcopyrite is to be so floated, however, the cyanide addition must be carefully regulated, since this mineral is materially depressed by relatively small amounts of cyanide at a *p*H above 8 (see Fig. 59).

At CENTRAL MINE, Broken Hill, Australia (*88 Au 23*), KEtX, 0.03 to 0.05 lb., is used to float galena, and soda ash, 0.6 to 0.8 lb. per ton, to lower concentration of lead ion and prevent activation of sphalerite. This is essentially differential flotation by reason of the relatively high solubility of zinc ethyl xanthate. Laboratory results indicated better grade of lead concentrate with more soda ash, but build-up of some ingredient in circulating mill water with the higher concentrations caused a great decrease in grade. Cyanide as a depressant improved grade of lead concentrate but depressed silver. Zinc was reactivated by neutralisation of the pulp (13 to 15 lb. per ton of H_2SO_4 required) and 0.4 to 0.5 lb. copper sulphate, and floated with 0.05 to 0.07 lb. KEtX. An alkaline circuit was harmful in zinc flotation. A similar method is followed at BROKEN HILL SOUTH (*129 J 350*).

At BUNKER HILL & SULLIVAN (*U. S. pat. 2,019,906*) a partially oxidized lead-zinc-iron ore yielded four concentrates and a reject as follows: The ground ore was treated with sodium silicate in sufficient

quantity to disperse slimes thoroughly and was then lightly deslimed. Glue, 0.3 lb. per ton; a frothing agent comprising 10% pine oil and 90% Barrett 4; and 0.005 lb. of ethyl xanthate were added and galena floated. Sphalerite was next activated with 1 lb. of copper sulphate and floated with addition of 0.1 lb. Barrett 4. Pyrite was floated next on addition of 0.2 lb. ethyl xanthate. Finally cerussite was floated with 1 lb. of an oleic soap-cresol gel.

At PECOS (*IC 6695*) it was found that lead recovery and grade of concentrate were improved and zinc grade was improved at the expense of a slight loss in recovery by substituting lime and amyl xanthate for soda ash and ethyl xanthate in the lead circuit. Zinc sulphate only (0.8 lb. per ton) was used with the lime in the 15-min. conditioning for zinc depression; cyanide addition was deferred until zinc began to show in lead roughing (fourth cell) and until pyrite began to appear in zinc flotation, *i.e.*, in the cleaners. The earlier cyanide was added the less the recovery of Ag and Cu in lead concentrate (where they are paid for). $ZnSO_4$ is, similarly, the only depressant used for sphalerite at the HECLA (*IC 6600*), PAGE (*IC 6587*), and MORNING (*IC 6587*) mills.

Parsons (*123 J 931*) generalizes that the separation between lead and zinc with cyanide is easier and more complete the higher the iron content of the zinc mineral. This is probably due to coupling prevention of copper resurfacing of zinc with cuprocyanide depression of iron.

Sphalerite is described as floated preferentially to galena by use of an unsubstituted primary aliphatic amine of at least 6 carbon atoms (*U. S. pat. 2,287,274*). (See also Art. 5.)

Galena-pyrite separation with sulphydric collectors is made with cyanide; alkali is not effective for the reason that the critical *p*H of the two minerals is close together.

Copper-iron separation is a much more difficult problem than lead-zinc both because the copper is usually present in two or more sulphides having different responses to flotation agents, and because depression of the iron is not simply a matter of prevention of activation, as is the case with sphalerite, but requires the taking of steps that detract from the floatability of the copper minerals as well as of the iron minerals, although to a smaller extent.

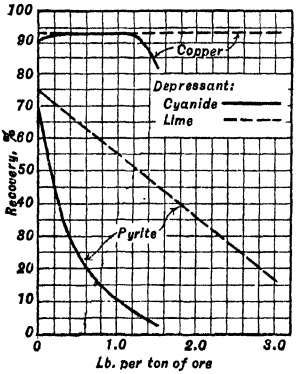

FIG. 60. Comparative depressant actions of lime and sodium cyanide on a chalcopyrite-pyrite ore (*TP 7 AC; 87 A 154*).

The usual copper sulphides are chalcocite and chalcopyrite, the former characteristic of secondary deposits and the latter of primary. Bornite is fairly common in transition zones; covellite is usually present in minor quantities with chalcocite; tetrahedrite, tennantite and enargite are often present in minor amounts in vein-type deposits, particularly in ores containing sensible amounts of precious metals.

The usual iron mineral is pyrite. Pyrrhotite may constitute an important part of the massive copper sulphides, as, for example, at NORANDA and TENNESSEE COPPER.

The relative responses of the copper minerals and of pyrite to sulphydrate collectors and to cyanide, the usual iron depressant, are shown in Figs. 59 and 60. High concentration of lime is also an effective depressant for pyrite (Fig. 60). It is apparent from the curves that while the differences in the responses of chalcocite and covellite on the one hand and pyrite on the other to the collectors and to cyanide are relatively great, and that differential flotation should, therefore, be possible over a considerable range of *p*H and reagent concentrations, the differences in response are much less with chalcopyrite and bornite. Control must be much closer with these minerals, and separation is never so complete.

In tests on copper-iron separation with ALDERMAC ore, 0.04 lb. per ton was the maximum permissible cyanide addition without affecting chalcopyrite in alkaline (soda-ash) pulp with Aerofloat 25 and cresylic acid. Pyrite was floated subsequently with Aerofloat 25, ethyl xanthate, and copper sulphate (*724 CMB 101*). At HOWE SOUND (*140 #11 J 34*) the maximum permissible cyanide addition was 0.02 to 0.04 lb. per ton of feed. The effectiveness of cyanide to depress pyrite from chalcopyrite is less at 95° F. than at 10° F. (*154 A 48*). Addition of copper sulphate increases pyrite depression at the lower temperature but not at the higher. Sodium Aerofloat shows maximum differentiation between the two minerals in the absence of copper sulphate (*112 A 290*). The Aerofloat reagents are normally used in the mills for the separation, since they are effective at lower alkalinities than xanthates, but *p*H must be watched closely as the effectiveness of the collector falls off rapidly with excess alkalinity. The dithiocarbamates are highly effective for differentiation in the presence of copper ion.

At ANACONDA (*112 A 413*) an exhaustive series of tests was run, directed toward maximum depression of pyrite. It was found that cyanide plus zinc sulphate was much more effective than high lime, but that, using them, middling could not be returned to the head of the roughing circuit or there was a loss of copper mineral locked with depressed pyrite. A flowsheet was devised in which a high-grade concentrate was made on the primary rougher, using sodium Aerofloat and ethyl xanthate as collectors

and high lime for depression, then a high-pyrite middling was made on the scavenger, which middling was reground and floated in a cleaner-scavenger circuit, making tailing on the scavenger; scavenger froth was sent back to the cleaner. Tailing of the cleaner-scavenger circuit was 0.36% Cu as against 0.14% on the primary scavenger, with a combined tailing of 0.20% Cu. Concentrate was raised from 28% to 41% Cu.

Lime is the usual pyrite depressant. At ANACONDA (*128 J 297*) *p*H is carried at 12 to 13 (5 to 6 lb. of lime per ton of ore), and ethyl xanthate kept at a minimum; tonnage rate is kept as constant as possible; control is by colorimetric tailing assays at hourly intervals; overfrothing raises tailing loss. At BRITANNIA (*IC 6619*) a bulk float of copper minerals and copper-pyrite middling is made with ethyl xanthate, pine oil, and lime (*p*H 8 to 8.5); the rough concentrate is reground to break the copper-pyrite bond and then refloated with ethyl xanthate, Aerofloat 25, pine oil, and lime to *p*H 10 to 10.5. At MIAMI (*IC 6573*) it was found necessary to have a small amount of undissolved lime present for good pyrite depression in chalcocite-pyrite rough concentrate; increase in lime depresses chalcocite also. At UTAH (*IC 6479*) a small amount of cyanide is used with lime.

At INTERNATIONAL NICKEL (*130 J 467*) chalcopyrite is said to be floated from pyrrhotite and pentlandite without use of a depressant, simply by crowding the cells and feeding starvation quantities of collector and frother.

At RIO TINTO, Province of Huelva, Spain (*52 CMJ 97*), treating a high-sulphide chalcopyrite-pyrite ore, the flotation routing (Fig. 58) involves the familiar roughing out of a bulk concentrate, regrinding this, and making a differential float of chalcopyrite and a final tailing therefrom. In both the rougher and cleaner circuits, however, low-grade secondary middling from scavenger cells is cleaned and returned directly to the concentrate cell of its respective circuit. This ingenious variant on the usual one-stage middling counterflow in concentrate-middling routings tends to build up a rich feed to the concentrate cell without as many reflotations of the difficultly floatable fraction of the valuable mineral, and thus tends to decrease tailing loss.

Sphalerite-pyrite separation is effected by first activating the sphalerite with copper sulphate and then depressing pyrite with lime. The collector should be of low molecular weight and added in as small quantity as will just effect sphalerite flotation. Wark and Cox (*134 A 48*) report tests indicating that the copper-cyanide complex is the effective depressant for pyrite in the co-presence of copper ion and a cyanide salt, and that the depressing action of this ion on pyrite is greater at low than at high atmospheric temperatures.

In general in lead-zinc-iron separations the alkalinity in the zinc circuit is kept higher than in either of the others.

Chalcopyrite-sphalerite separation is one of the most difficult. The usual procedure is to add soda ash and cyanide in grinding to prevent resurfacing of sphalerite with copper and then to float with a strong collector, adding a little copper sulphate at the cell, if necessary, to lower cyanide-ion concentration below the critical for chalcopyrite.

At SHERRITT-GORDON (*Q, Tref 1/44*) chalcopyrite is floated from a heavy-sulphide pulp maintained at 0.8 lb. Na_2CO_3 per ton of water, using cyanide to depress sphalerite and thiocarbanilid to minimize iron flotation. Amyl xanthate is used for scavenging copper. Aerofloat 15 is the primary frother. Sphalerite is activated and floated from iron in the usual fashion.

Barthelmy (*134 J 281; U. S. pat. 1,950,537*) describes a process for floating sphalerite from copper minerals in which the ore is first treated with an alkaline ferro- or ferricyanide, forming, according to the patentee, a colloidal coating of copper-iron cyanide at the copper surfaces, then activating sphalerite with copper sulphate and floating with a dithiophosphate. Chalcopyrite requires oxidizing conditions in the pulp for depression. The copper minerals may be floated subsequently by addition of a xanthate, which, according to the patentee, decomposes the copper-iron cyanide complex.

Galena-copper separation is unusual. The method is to make a bulk float and then either depress the galena with a dichromate or depress chalcopyrite with cyanide.

At DUQUESNE (*153 A 619;* see Flowsheet 54, Fig. 58) a bulk lead-copper concentrate is floated from sphalerite using propyl xanthate as collector and zinc sulphate and cyanide to depress zinc; sphalerite is floated from this tailing with lime, copper sulphate, xanthate, and pine oil, with a little further cyanide to drop iron. The bulk concentrate is refloated with high cyanide (11 lb. per ton of bulk concentrate) at *p*H 9.7 to 10.2, yielding galena as float and chalcopyrite as underflow. Maximum *p*H must be kept down in order not to exceed the critical *p*H for galena.

Molybdenite-copper separation is practiced at a number of the porphyry coppers. The usual procedure is to float a bulk concentrate of the two sulphides, depressing pyrite with high lime, roast or steam the bulk concentrate to destroy xanthate coatings, and then float molybdenite with a neutral oil. Rough depression of the sulphides accompanying molybdenite in a bulk concentrate not made with oil may be effected by conditioning with a high concentration of sulphide ion, which displaces sulphydrate ion; the molybdenite is not affected since sulphydrate ion plays no part in its flotation.

Miscellaneous. SIEGENITE (Co, Ni sulphide) can be floated from copper and iron sulphides with diphenyl thiocarbazid (Art. 4). NICKEL-PYRRHOTITE separation is normally made with the same reagents as chalcopyrite-pyrite, hence any chalcopyrite present floats with the nickel minerals. CINNABAR-ARSENIC separation, the arsenic minerals being realgar and arsenopyrite, was made (*153 A 536*) using dextrin as a depressant for realgar,

cyanide as a depressant for arsenopyrite, mercuric chloride as an activant for cinnabar after closure of the surface by H_2S generated in grinding the realgar, xanthate as collector, and pine oil as frother. Herkenhoff (*U. S. pat. 2,342,277*) describes separation of a bulk float of pyrrhotite, arsenopyrite, and pyrite by use of an alkali permanganate as a conditioner. As little as 0.05 lb. per ton is stated to be effective to depress pyrrhotite in the presence of arsenopyrite, whereas a somewhat greater quantity, but usually less than 0.25 lb. per ton, depresses arsenopyrite while permitting pyrite to float. Sulphydrate collectors and frother are added with the depressant to effect flotation; pulp should be alkaline with soda ash, and copper sulphate aids the flotation.

48. BULK DIFFERENTIAL *VS.* STRAIGHT SELECTIVE FLOTATION

Choice between the two methods depends on the kinds of sulphide minerals to be separated, their absolute and relative proportions, the amount of grinding necessary for severance, the precious-metal content and distribution, and the soluble-salt content of the pulp. In general, if the soluble heavy-metal salt content of the ore is high, and particularly if it is high in copper, lead, or silver, the ore must either be washed before any flotation or the first float must be a bulk concentrate; otherwise the consumption of reagents is excessive. In general, also, if the valuable sulphides are coarsely aggregated with respect to the ore as a whole, but fine grinding is required to separate them from each other, bulk flotation with subsequent differential separation is again indicated. With relatively clean ores in which substantially complete severance is effected at ordinary flotation size (<65-m.), lead-zinc and lead-zinc-iron separations are normally effected by straight selective flotation, this method being the more clearly indicated the higher the sulphide content of the ore. Departure from this rule, if any, is the more likely the smaller the ratio of lead to zinc. When precious metals and iron sulphides are both present in a copper ore, the gold being associated with the copper mineral, decision is frequently based on reagent cost. Since high lime, used to depress pyrite, is also a depressant for gold, cyanide and soda ash are indicated as depressant and protector respectively, and as both are relatively expensive, a preliminary bulk float is indicated. This is particularly true when the copper mineral is chalcopyrite, since the copper sulphate also added to aid in reflotation of the chalcopyrite aids the cyanide in depression of the pyrite. Bulk flotation is usually the first step also when depression of one of the sulphides requires prolonged contact or relatively high concentrations of reagents; thus when lead-copper separation is desired, depression of lead requires the expensive dichromates while depression of chalcopyrite requires conditioning with cyanide, in both cases with relatively high concentrations of reagents and prolonged contact. Massive sulphide ores containing chalcopyrite and minor zinc are usually bulk floated under conditions of high lime and a small amount of cyanide to depress pyrite and to depress as much sphalerite as possible and the bulk concentrate treated with cyanide to depress the zinc and further pyrite. If economic, the tailing from the bulk-float cell may be retreated to make zinc concentrate by adding copper sulphate.

FLOTATION OF NONSULPHIDES

The flotation of nonsulphides is, fundamentally, the same kind of operation as that involved in flotation of sulphides, *viz.*, coating of the particles to be floated with a water-repellent oriented hydrocarbon-type film; depression of the accompanying minerals; and control of frothing. But each of these steps is more difficult in nonsulphide flotation, both because of the greater chemical similarities between the desired and undesired minerals in the nonsulphide ores and, in many cases, because of the higher requirements, in the nonmetallic industries, for purity of concentrate.

The nonsulphide minerals may be classified into several groups on the fundamental basis of their chemical composition, which affects and determines the methods of flotation applicable. The classifications adopted herein are: (1) oxidized heavy-metal minerals; (2) nonsilicate minerals of alkali and alkaline-earth metals; (3) silicate minerals; (4) inert minerals.

OXIDIZED HEAVY-METAL MINERALS

The oxidized metallic minerals include the native metals, the oxides of the heavy metals, and the heavy-metal salts. The native metals are easily floated, if the particle size is small enough, using simply sulphydrate collectors, with gangue depressants if the gangue is slimy. The oxides are not readily floatable because they are, in general, so highly insoluble

in water and resist ionization to any appreciable extent in dilute aqueous solutions. The metallic salts other than the silicates are quite readily soluble in water to a sufficient extent for collector reactions; in fact the greatest difficulty with them is to stop the collector reaction while the precipitated coating is still substantially monomolecular and like-oriented. The standard method is stage sulphidization and collector coating with one of the more powerful sulphydrate collectors; fortification of the reaction coating by oil, usually a creosote; maintenance of a dispersed gangue by use of sodium silicate protected by sodium carbonate; and floating with a fragile, evanescent froth. Reconstructed oils (Art. 6) are frequently used as collectors. Their efficacy for such service is probably due to the fact that they tend to hold the sulphydrate compound that makes them active largely in solution in their droplets, and that by spreading over the collector reaction coating as fast as it forms they prevent the formation of noncollecting thick crystalline coatings. Their use is, therefore, equivalent to stage sulphidizing and stage addition of collector.

49. NATIVE METALS

This class comprises gold, silver, and copper. The native metal is the usual form of occurrence for gold; native silver ores are far from common, and native copper is fairly unusual.

Gold is rarely floated when the gold is free and the gangue simple, since amalgamation and/or cyanidation are cheaper and equally or more efficient in the recovery of such values. The gold ores subjected to flotation are usually ores in which the precious metals are enclosed in one or more sulphides, or the more or less oxidized residues of such ores. Graphitic ores are also usually floated, since the graphite tends to reprecipitate gold dissolved by cyanide and/or to coat amalgamating plates.

A remedy reported (*720 CMB 1931*) for such an ore was flotation of the graphite and some gold with lime, kerosene, and pine oil, whereupon cyanidation of tailing yielded 99% recovery of the remaining gold.

The basic principles underlying treatment are easy to state but rather more difficult to follow. Since every ore particle that has gold in it contributes much more to tailing loss than a particle of the same size in base-metal concentration, the primary endeavor is to float every such particle. Hence powerful collectors should be used. Since these are useful also for flotation of oxidized sulphides, two ends are thereby served. But the powerful collectors differentiate poorly, if at all, between the various sulphides. If the ore is complex and any segregation has occurred in the ore genesis, differential flotation must be attempted in order to save after-treatment charges. Thus gold in lead or copper concentrate is worth more per ounce at the smelter than it is in zinc or iron concentrate, and the usual penalties for zinc in lead and copper concentrate or iron in copper and zinc concentrates apply irrespective of gold content. Copper is objectionable in concentrate that is to be cyanided. Arsenic, antimony, and bismuth frequently occur in gold-bearing sulphides and are usually undesirable in the concentrates. Native gold is not easy to float, and the coated gold in oxidized ores is yet more difficult. Freight rates on gold-bearing concentrates are high, so that high ratios of concentration are desirable. As a consequence of these varied conditions and frequently contradictory requirements, the operator puts in a little of this to hold that down, and some of that to bring something else up until his reagent list looks like the menu for a ten-course dinner.

It is a rule of thumb in gold milling generally that the recovery of gold increases with fineness of grinding. Oldright and Head (*134 J 228*) have shown, however, that when the gold in the ore is coarse, fine grinding tends to imbed other constituents of the ore into the surfaces of the gold particles, with the result that their response to flotation or amalgamation is greatly diminished. This fact, coupled with the tendency of the gold to hang up in tumbling mills and mechanical classifiers, the relative difficulty in flotation of gold at a size that would be fine for a sulphide, and the high unit value of lost gold particles, leads to the desirability of concentration in the grinding circuit, and this is usual practice in present-day flotation of gold ores. See ***Unit cells*** (Art. 23), ***Mineral jigs*** (Sec. 11, Art. 7), and ***Gold*** (Sec. 2, Art. 22).

Reagents. What might be considered a stock reagent combination for a sulphide gold ore with clean siliceous gangue, little or no oxidation, and no differential separation of sulphides necessary, is a C_3 or C_4 xanthate or Aerofloat as a collector, ±0.1 lb. per ton; cresol, pine oil, or Aerofloat 15 as a frother, ±0.1 lb. per ton; and sodium silicate as a dispersant, ±0.5 lb. The same ore, if slightly oxidized, would require a C_5 collector, in slightly greater quantity than above, and would need sodium carbonate with the silicate to precipitate soluble iron and to protect the silicate. Excess of soda ash may depress the gold (*IC 7024*). If the oxidation is heavy, hydroxyl-ion addition should increase, a part, at least, normally being added as soda ash (lime is a depressant); sodium sulphide should be added in

stages; more of the soluble collector should be used, preferably added in stages; an oily collector, preferably a coal-tar creosote, 0.2 to 0.4 lb. per ton, should be added also; and frother addition will normally be greater. When differential flotation is practiced, the usual sulphide-flotation and depression requirements prevail, with the exception that collectors are usually stronger than when gold is absent, and especially powerful collecting conditions prevail in the final float. There is no recognized reagent for tarnished gold (*140 #11 J 34*); long time-factor is the best remedy. For reagent combinations used with particular ores see Sec. 2, Art. 22.

At BEATTIE, treating an ore in which gold is finely disseminated in pyrite, which is in turn finely disseminated in silicified porphyry, pyrite is activated with copper sulphate in the presence of sodium carbonate in the grinding circuit and Barrett 4 is added here also for emulsification; ethyl xanthate and pine oil are added at the roughers and Rhodamine B and further pine oil are added at the scavenger to raise a quartz float for regrinding and return to the rougher. At SURCEASE (*141 #8 J 48*), making a mixed sulphide concentrate, Minerec B, pentasol xanthate, soda ash and lead acetate were added in the grinding mill, and pentasol xanthate, secondary butyl thiophosphoric acid, mercapto-benzothiazole, and Aerofloat 15 at the cells. At NORTH CAMARINES (*141 #10 J 49*) pentasol xanthate and Aerofloat 31, with pine oil and lime for depression of pyrite, were used to make a high-copper low-gold concentrate. At WRIGHT-HARGREAVES (*140 #4 J 42*), treating siliceous pyritic cyanide tailing, seeking a high ratio of concentration (100 : 1), the collector used was secondary butyl xanthate (0.04 lb. per ton), DuPont alcohols 23 and 25 were added for frothing, copper sulphate (0.3 lb.) to complex the cyanide, and soda ash (0.15 lb.). At HOG MOUNTAIN (*136 J 508*) hydrated lime (0.4 lb. per ton), amyl xanthate (0.05 lb.), sodium Aerofloat (0.03 lb.), and fuel oil (0.03 lb.) were added to the ball mill, cresylic acid (0.4 lb.) to the first cell, and pine oil (0.1 lb.) staged along later cells. At GOLDEN CYCLE (*136 J 381*), treating custom ores, soda ash, cyanide, and zinc sulphate, with ethyl and amyl xanthates and coal-tar creosote, for lead flotation, are added at the ball mill, cresol and pine oil at the cells, and copper sulphate in the zinc conditioner. For MOTHER LODE ores (*136 J 173*) sodium sulphide (0.4 lb.) and copper sulphate (0.2 lb.) are used for conditioning, amyl xanthate (0.15 lb.) for collection, and cresol (0.33 lb.) for frothing. The Bureau of Mines staff (*RI 3564*) use as a stock testing charge, for preliminary tests, amyl xanthate (0.1 lb. per ton), Aerofloat 15 (0.15 lb.), and cresol or pine oil (0.05 lb.), varying quantities and introducing other reagents as indicated. PLACER GOLD is readily floated, unless too coarse or too badly coated, with ethyl, butyl, or amyl xanthate and Aerofloat 15 with or without soda ash. Lange (*136 J 116*) states generally that gold coarser than 48-m. is hard to float, but that <65-m. gives no difficulty from a size standpoint; that lime and soda ash are definitely depressing, sodium silicate slightly so, and sodium sulphide generally so, but that sulphuric acid is helpful in thin pulps (20% solids) although depressing at higher pulp density; that copper sulphate increases rate of flotation but not recovery; that amyl xanthate, amyl xanthate plus thiocarbanilid, and Aerofloat 31 and 208 are the best collectors for free gold; that free gold, in general, does not float as readily as sulphides; and that high-density pulps are best. Mercury or a mercuric salt in a reducing pulp atmosphere are recommended for difficult ores (*U. S. pat. 2,097,608–9*). Leaver and Woolf (*RI 3275*) made an extensive study of the effects of sodium sulphide in gold flotation. They used an artificial mixture of a gold containing 15% alloyed silver and sea sand. They found sodium sulphide generally harmful to flotation of metallic gold, not helpful for coated gold, bad for flotation of gold-bearing sulphides generally, and bad for silver sulphides, especially when not added in stages, but useful with clayey gangues to raise grade of concentrate although decreasing recovery somewhat. With talcy or iron-oxide slimes both grade and recovery were affected adversely. Long conditioning tended to decrease the harmful effect (probably due to oxidation). Ores containing gold in copper or oxidized lead minerals were both helped to float by the sulphide. Soluble starch was a better depressant for slime than the sulphide. High lime was bad. The collectors used were sodium secondary butyl xanthate and Aerofloat 15 with or without pine oil as a frother. At NORANDA (*112 A 554*) it is necessary to aerate heavily pyritic ore after grinding for periods as great as 40 min. in order to attain optimum flotation of gold, whereupon best gold recovery is made in a high-lime pulp. At SHENANDOAH DIVES (*136 J 395*) it was found that cyanide depression of pyrite and sphalerite caused gold loss; similar depression at GOLDEN CYCLE put 20 to 40¢ soluble gold per ton of water in the tailing. At HOLDEN (*140 #11 J 34*) a 40-min. roughing period is necessary for satisfactory recovery of coated gold. Fahrenwald (*137 J 554*) reports laboratory tests indicating increases in recovery, grade of concentrate and speed of flotation with increasing dilution over the range from 35% to 10% solids. Coke (*U. S. pat. 2,285,394*) describes the use of a heavy metal salt of sulphonated castor oil as an aid in collection of gold and associated sulphides; he asserts that the reagent is particularly effective in pulps made with sea water.

Chapman (*134 A 207*) has proposed a process for gold ores comprising solution with cyanide, precipitation on charcoal and flotation of the latter. Lime, cyanide, and activated carbon are added to the grinding mill, an oily collector and a frothing agent to the cells.

An operation of the method is reported at RIO TINTO (*141 #3 J 43*) in which oxidized gossan carrying $3.25 per ton in gold was treated at the rate of 1,000 tons per 24 hr., being ground to 70% <200-m. Recovery was 90% on the charcoal added, representing 87% of the soluble gold or 70% of the total gold. Silver recovery was low.

Silver (metallic) is treated in the same way as gold, and the same reagents are effective. Improvement in recovery by use of ammonium phosphate has been reported (*IC 6945*).

Copper (metallic) is readily floated in clean ores with small quantities of ethyl xanthate and pine oil; in slimy oxidized ores the collector must be protected by precipitating soluble salts (lime, soda ash) and the gangue should be dispersed (sodium silicate). It has been proposed (*U. S. pat. 2,310,240*) to treat the native-copper ores of the Lake Superior dis-

trict, in which the vein minerals are calcite and epidote, and the country rock mined therewith is highly siliceous, with a collecting mixture comprising xanthate and soap to thereby float a low-grade concentrate containing also the bulk of the locked mineral in a roughing operation, and thereafter to regrind the concentrate and float the copper therefrom with sulphydrate collector at a *p*H high enough to destroy soap flotation of the nonsulphides (Art. 8).

50. OXIDES

The base-metal oxides have, to date (1942), proved to be the most difficult of all minerals to float effectively. The fundamental difficulty is that of producing an ion of the metal at the particle surface by treatment in dilute aqueous solutions at ordinary atmospheric temperatures. The only commercial operations reported so far are for rutile and ilmenite from beach sands, and for manganese; flotation of chromite is rumored. Patent and periodical literature record more or less successful treatment of bauxite, cassiterite, chromite, hematite, molybdite, and arsenic trioxide from flue dusts. In most cases the collector is soap or an analogous chemical, frequently fortified with an oil. The practice is quite definitely that of nonmetallic flotation, involving desliming, substantial elimination of dissolved metallic ions, and careful control of gangue-particle surfaces.

Bauxite may comprise gibbsite, diaspore, or a mixture of the two. Gibbsite is reported (*RI 3586*) as readily floatable from silica in a carefully deslimed pulp, conditioned to *p*H 7.5 to 9 with sodium sulphide, using oleic acid as a collector, and a hydrocarbon distillate of medium boiling range to aid collection and prevent soap overfrothing. Diaspore is more difficult to float but responds to some extent to the same treatment.

Best results with slimes present were obtained by grinding in silica; using meta- or pyro-phosphates to complex Ca, Mg, Fe, and Al ions in solution; adding sodium silicate or sodium sulphide for further slime dispersion, if necessary; conditioning and coating in thick pulp (65 to 75% solids); and floating in a dilute pulp (15% solids). With such treatment silica was reduced from 20% to 5 or 6%. Using dextrin and a higher *p*H reduced Fe_2O_3 from 13% to 6%. Alkyl sulphates and sulphonates with oil produced some separation but were not as effective as oleic acid. Talloel was almost as effective as oleic acid in collection but produced violent overfrothing, particularly at higher *p*H. Quebracho, sodium silicate, or dextrin reduced the phosphorus (apatite) content of concentrate.

Cassiterite has been claimed floatable in several patents; its flotation is reported by the U. S. Bureau of Mines (*RI 3397*); and certain samples of concentrate have been floated at Columbia University. But no commercial flotation of cassiterite ores is reported and Columbia experience indicates that success there was due to a superficial coating, probably of iron oxide, on the cassiterite grains. This postulate is supported by the fact that quartz also present in the concentrate floated excessively. Activation of cassiterite by calcium hydroxide has been reported.

Collectors used in most reported flotations have been fatty acid, usually oleic, or soap, with or without a frother (pine oil, cresol, Ninol), but Vivian (*36 MM 348*) reports some collection by cupferron (ammonium salt of nitrosophenyl hydroxylamine). Kirkland (*CU 1932*) found that cassiterite abstracted the negative radical of this compound, leaving ammonium ion substantially undiminished in concentration in the solution. Activation attempts with tungstic acid, *iso*-polyacids (*U. S. pat. 2,125,631*), $CuSO_4$, or $FeSO_4$ in weak alkali, nascent hydrogen (*Brit. pat. 354,395*/1930), and sodium metaphosphate with a metal salt are reported, as well as the use of a metal salt-silicate mixture (Art. 10) to depress silicate gangue. It is reported that the function of the metal-silicate is to coat quartz with silica gel and that such action has been indicated by staining with a water-soluble dye (*27 ME 527*).

Chromite flotation is reported (*RI 3370, 3397*) as effected by soap and oleic acid, using in one case sodium silicate and sodium carbonate as conditioners and in another sodium metaphosphate plus or minus $FeSO_4$ or $PbNO_3$. Conversely flotation of olivine from chromite with oleic acid in slightly acid pulp is reported (*134 A 87*).

Various patents recommend triethanol amine (*U. S. pat. 2,014,406*), phosphomolybdic or phosphotungstic acids (*U. S. pat. 2,082,817*) and isopolyacids (*U. S. pat. 2,125,631*) as conditioners with fatty-acid collectors. The U. S. Bureau of Mines reports a recovery of 75% with a concentrate containing 42.6% Cr_2O_3 on an ore ground through 200-m. As usual, flotation is easier with deslimed pulp. Coghill and Clemmer (*112 A 459*) report that acid is superior to alkali for depressing silicates in deslimed chromite (and other) nonsulphide soap flotation.

Cuprite floats readily under the same conditions as malachite and azurite, *q.v.*

Ilmenite is reported floated (*RI 3328*) with oleic acid (1.5 lb. per ton), Emulsol X-1-corn oil emulsion (0.25 lb.), and sodium silicate (0.17 lb.) after a silica grind. The same experimenters also report that with soda ash admixed with the pulp a steel-mill grind gave equally good flotation. Soft water was necessary for good results, quartz being the gangue in all cases. Isopolyacids are recommended (*U. S. pat. 2,125,631*) for conditioning with fatty-acid collectors. Cetyl pyridinium bromide is claimed

as a collector (*U. S. pat. 2,132,902*). Flotation of quartz by Emulsol 660 B (cationic), leaving ilmenite depressed, is reported. McMurray (*AIME, Feb. meeting, 1943*) reported flotation of ilmenite with pine oil, Lorolamine and sulphuric acid; *p*H <5.1 was required for consistent results; concentrate contained 53.8% TiO_2 and represented 90% recovery.

Iron oxides. The problem of flotation rises both in the separation of small quantities of the oxide occurring as an impurity, *e.g.*, as in glass sands, barite, bauxite, etc., and in treatment of low-grade iron ores. The facts are, at present (1942), that while granular hematite and granular magnetite float readily as pure minerals and limonitic slimes are almost impossible to keep down when one seeks to float anything else in a pulp containing them, there are, nevertheless, no commercial operations in which the iron oxides are floated.

Keck *et al.* (*134 A 102*) report experiments on pure-mineral flotation of specular and massive HEMATITES with fatty-acid collectors. Oleic acid was best; optimum *p*H was 7 to 7.4, an active frother was desirable, and optimum recovery was made over the size range of 20- to 150-μ. Lead nitrate was found to better recovery when added in quantities of 0.4 to 0.6 lb. per ton, but to have a depressing effect over the range of 0.1 to 0.3 lb. Sodium hexametaphosphate aided collection; gelatine, tannic acid, and sodium silicate were powerful depressants. Behavior of MAGNETITE was similar to that of hematite (*134 A 129*). Mesabi log-washer tailing carrying 17% Fe as hematite, in laboratory test, yielded 74% of the iron in a 59% concentrate when ground fine and floated with 1 lb. per ton of sodium oleate, 2 lb. of soda ash, and up to 0.5 lb. of sodium silicate (*132 J 54*). Current wash-ore slime required desliming and flotation in soft water (*139 #6 J 42*); it then yielded satisfactory concentrate with the same reagents, but recovery of >200-m. material was very low. As a result the over-all iron recoveries, counting desliming loss, ranged from 25 to 75%, depending on the amount and tenor of the coarser material present.

Starch is reported as a satisfactory depressant for iron oxide slimes in xanthate flotation (*RI 3436*).

Manganese oxides are floated from siliceous gangue on a commercial scale at CUBAN-AMERICAN MANGANESE (Sec. 2, Fig. 137).

A tremendous amount of experimentation has been done on other ores, the results of which may be summarized as follows: The crystalline oxides float readily from siliceous gangue with fatty acids and their soaps, but the earthy oxides separate from gangue difficultly if at all. Desliming is advantageous but not necessary. Sodium silicate, with or without soda ash, is the usual conditioner. With calcareous and chloritic gangues separation by soap flotation is poor. Iron oxides and phosphorus (probably as phosphate) float with the manganese substantially nonselectively in soap flotation; the iron can be largely removed by a reducing roast and magnetic separation of concentrate. Flotation of quartz from the manganese shows little promise (*RI 3383, 3397, 3419, 3547, 3564, 3600, 3623, 3624, 3628, 3633; 148 #2 J 80*).

Molybdite flotation with soap is reported (*RI 3370*).

Rutile. Flotation from mica and clay, using oleic acid as a collector, is reported (*RI 3473*).

A rutile-quartzite ore containing about 34% TiO_2, ground to <200-m. and thoroughly deslimed, yielded concentrate containing 87% TiO_2, representing 67% recovery, using oleic acid and Emulsol X–1 in small quantities. Attempts to float the slimes and silica with laurylamine hydrochloride left coarse silica in the nonfloated rutile (*RI 3628*). The use of isopolyacids as activators is recommended (*U. S. pat. 2,125,631*). Emulsol X–1 is said to be a collector (*RI 3333*). Flotation of rutile, ilmenite, magnetite, and alumina from glass sand is asserted (*U. S. pat. 2,257,808*) using a reagent combination comprising a wood creosote (*e.g.*, Pensacola Tar and Turpentine 400, 0.5 lb. per ton; or Cleveland Cliffs 1 or 2), a sulphonated oil (Colonial Dipex M, Colonial Beacon Oil Co., a pure sodium sulphate of a mineral oil), 0.4 lb.; and oleic acid or a soap (0.4 lb.). Procedure involves deflocculation with or without subsequent decantation, and flotation in a thick pulp (30 to 50% solids) in a pneumatic cell. Excess fatty acid tends to float silica.

Stainerite is reported (*RI* 3370) to have been floated in the laboratory with 10 lb. per ton of ammonium sulphide, sodium silicate (1 lb.), amyl xanthate (4 lb.), and pine oil (0.05 lb.).

Arsenic trioxide in flue dusts is said (*U. S. pat. 2,257,710*) to float in a pulp neutralized with lime, using kerosene as a collector and the flue gases themselves for "aeration" and frothing-agent supply.

51. HEAVY-METAL OXIDE SALTS

This group comprises principally the nonsilicate salt-type oxidation products of the sulphides. Cerussite, malachite, and cerargyrite are the principal members; the vanadium minerals are floated at one or two mills; the jarosites give great difficulty.

Alunite floats readily from quartz, using fatty acid in pulps made slightly alkaline by sodium silicate (*RI 3610*). Iron was depressed to a considerable extent with the quartz, as were also clay and feldspar. Some flotation of the former with the alunite was effected by co-addition of dibutyl amine.

Anglesite is a minor constituent of oxidized lead ores. It is more difficult to float than cerussite on account of higher solubility. It is reported (*RI 3419*) to sulphidize better when the sulphate-ion concentration in solution is raised by addition of sodium sulphate.

Wark and Cox report (*134 A 10*) that sulphide films are most adherent to it at pH 8 to 10; that bubble contact is induced by ethyl xanthate best at pH 9.5 to 11; that xanthate concentration must be greater than 50 mg. per li.; that more xanthate is required when sodium carbonate is added; that sodium sulphate had no effect; that it is activated for xanthate collection by sodium hydrogen phosphate, but that only a small excess of the salt can be tolerated.

Cerussite is the usual oxidized mineral in the simpler oxidized lead ores. It is readily floatable by step addition of a considerable quantity (up to several pounds per ton) of higher xanthate, or, more economically, by step sulphidization with sodium sulphide and simultaneous step addition of small quantities of higher xanthate. The mechanism of collection in the latter case is light sulphidization, oxidation of the surface film, and substantially monomolecular filming with lead xanthate. Best *p*H in contact-angle tests was <9 (*134 A 23*). An oil, usually a creosote, is normally used to fortify the soluble collector. Careful dispersion of slime gangue, usually effected by sodium silicate, is important. See Sec. 2, Fig. 127.

Alkaline cyanide in addition to the alkaline sulphide has been suggested for conditioning (*U. S. pat. 2,196,233*). Handy (*U. S. pat. 2,019,306*) recommends, as a collector, a gel made by mixing 57 parts oleic acid and 29 parts cresol, stirring thereinto a 10% aqueous solution of soda ash containing 8 parts, referred to the oil, of the ash, and then stirring in a 10% aqueous solution of sodium silicate, comprising 8 parts of the silicate on the mixture, until the mixture gels. This is to be added as a 10% emulsion in water. It has both frothing and collecting properties and is said to be effective to collect also malachite, hematite, siderite, and scheelite. It is added with sulphide reagents at BUNKER HILL & SULLIVAN (Sec. 2, Fig. 108). Christman and Falconer (*U. S. pat. 2,029,156*) prescribe mercapto-benzothiazoles, in pulps made acid with phosphoric acid, for both oxidized lead and copper minerals.

Cerargyrite is not an uncommon silver mineral in cerussite ores. Leaver and Woolf (*RI 3436*) found that it was readily floated by ethyl and amyl xanthates or by Aerofloat 15, that sodium sulphide depressed it, normal quantities of lime did no harm, but high lime (*p*H 11) decreased recovery and lowered grade, and that starch could be used as a slime depressant without affecting silver recovery.

Malachite and azurite float readily with either sulphydrate or fatty-acid collectors. Of the former the higher molecular-weight xanthates are best, with stage addition coincident with additions of sodium sulphide. If much copper sulphate is present in the ore it should be washed out; precipitation with Na_2S or Na_2CO_3 is not satisfactory (*RI 3419*).

Large-scale commercial practice at KATANGA (*135 J 401*) uses about 4 lb. per ton of 6 parts hydrolyzed palm oil and one of oleic acid or 12 parts corn oil to one of oleic acid after conditioning with 2.4 lb. soda ash and 1.5 lb. sodium silicate at 95° F. The *p*H should be 8.5 to 9. With high-talc ores the talc is first floated with 0.03 lb. pine oil alone. This treatment raises concentrate grade from 25% Cu and >18% insol. to 41% Cu and <3% insol. Recovery is about 90%, but tailing is high. In general the unsaturated fatty acids and their soaps are superior to the saturated (*136 J 220*). Lightly oxidized copper sulphides can be floated in the usual fashion (Art. 46) with amyl xanthate.

Chrysocolla does not sulphidize on the alkaline side; it can be sulphidized at *p*H 4, using H_2S or Na_2S with $(NH_4)_2SO_4$. High recoveries on a synthetic ore with sulphidization and xanthate collector are reported (*RI 3419*). Some success in laboratory flotation with animal-fatty acid soaps has been reported (*RI 3357*). At present (1942), however, commercial flotation of copper-silicate ores is not reported.

Rhodochrosite is floated by oleic acid or soap. Siliceous gangue is depressed by sodium silicate and sodium carbonate.

At ANACONDA (Sec. 2, Art. 138) a bulk sulphide float is taken first without harm to the subsequent soap flotation.

Calamine has been floated in the laboratory (*RI 3370*) by sulphidizing, activation with $CuSO_4$, collection by amyl xanthate and Barrett 4, with pine oil for frothing as needed.

Jarosites do not respond to the ordinary methods for treatment of oxidized ores. They respond to sulphidization very slightly, if at all. Flotation of deslimed ore in neutral or slightly alkaline solutions with octyl xanthate (3 lb. per ton) and with lauryl xanthate (1 lb. per ton) are reported (*RI 3419*). The same experimenters report nonselective flotation in the presence of calcite with higher fatty acids and also some recovery with sulphuretted (reconstructed, see Art. 6) pine oil in neutral pulp. Slimes are reported to consume tremendous quantities of reagent.

Siderite is reported (*RI 3335*) floatable with Emulsol K 1031. Siderite rock is reported (*112 A 457*) raised in iron content from 36% to 44% and lowered in silica content from 18% to 5% by soap-oleic acid flotation with the usual dispersants.

Tungsten minerals. The principal ore mineral is scheelite, but hübnerite, wolframite, and ferberite are not uncommon. Their floatability decreases in the order named. Scheelite is readily floated from silicate gangues by soap flotation with sodium silicate ± soda ash (*p*H 9.5 to 10.5) for conditioning.

Calcite gangues are depressed by metal-silicate treatment (Art. 10). It is reported (*OD Notes 7 AC*) that spraying froth on the cell with a dilute solution of Aerosol OT (sodium salt of dioctyl sulphosuccinic acid) improves grade markedly. This is strongly surface active and a strong detergent and would tend to disperse and drop the less lightly held material in the froth. Ultra-violet light is useful in observing the operation (*112 A 460*). Apatite, which will float with scheelite, can be depressed in the cleaner by a weak organic acid (formic or acetic) or by a low concentration of an inorganic acid (*RI 3339*). Hübnerite flotation is aided by potassium acid dichromate in both rougher and cleaner (*RI 3328*). Ferberite floats best in acid solution, depression thereby being prevented by addition of $MnSO_4$. Wolframite responds to the same reagents and conditions as ferberite. (See also Sec. 2, Fig. 164.)

A 75-ton plant at NEVADA-MASSACHUSETTS (*TP 585 USBM 19*) treated gravity-plant slimes assaying 0.25 to 0.5% WO_3, by scalping out pyrite with xanthate, Aerofloat 25, cresylic acid, and pine oil in a pulp made alkaline with soda ash, then roughing in a subaeration machine with oleic acid, sodium silicate, Emulsol X–1, and DuPont B 22 (or pine oil). Optimum *p*H was 9.0 to 9.5; lower *p*H lifted calcite and silica, higher tended to prevent frothing. Stage addition of collector and frother was desirable. Rough concentrate assayed 10 to 15% WO_3 with a recovery of 60 to 90%, averaging about 80%. Flotation concentrate was cleaned on slime tables to 50 to 65% WO_3 with a yield of 50 to 80%. Water treating to decrease hardness was necessary, both for conservation of collector and for economic recovery.

Vanadium minerals. The principal ore minerals are vanadinite and the descloizites.

Laboratory flotation is reported by the Bureau of Mines (*RI 3328, 3333, 3370, 3547, 3564, 3628*). The reagents were: soda ash to precipitate soluble salts, sodium sulphide for sulphidizing, $CuSO_4$ for activation, amyl xanthate and Aerofloat 25 step-added for frothing-collection. Recoveries on a feed assaying 1.6% V_2O_5 ranged from 60 to 90%, with concentrates carrying 10 to 17% V_2O_5. In general the conditions for flotation were those that favored flotation of cerussite, but sulphidization was much slower. Vanadinite floated more easily than the descloizites. Sodium naphthyl dithiocarbonate gave better collection than xanthate. Engel and Guggenheim (*RI 3425*) found that high concentrations of earth-metal salts derived from the mill water and the ore were harmful and that by filtering after grinding and throwing out Mg by lime and Ca by soda ash, then repulping, they could make 15% V_2O_5 concentrate and 0.13% tailing from a feed containing 1.55% V_2O_5. See also MAMMOTH-ST. ANTHONY, Sec. 2, Fig. 65.

Wulfenite responds to the same treatment as vanadinite.

Carnotite is reported easily floatable with soap, but rougher concentrate grade is low and losses in cleaning high (*RI 3370*).

Metal-acid minerals (tungstates, molybdates, etc.) are all apparently collectible by cationic collectors, on the basis of precipitation and contact-angle tests with laurylamine hydrochloride (*CU*).

52. NONSILICATE MINERALS OF ALKALI AND EARTH METALS

These minerals comprise a large group of soluble and relatively insoluble salts of which calcite, fluorspar, barite, halite, and sylvite are typical. Flotation is almost universally effected by soap flotation, the soap being added as such or formed *in situ* by hydrolysis of a fatty acid in the presence of an alkali. The coating reaction is dependent upon the fact that the earth-metal soaps are of very low solubility in water and hence precipitate as reaction products at the mineral surfaces, the soap ion displacing the acid ion of the mineral.

Because of the tendency of soaps to coagulate, and the gelatinous character of the coagules, bubble attachment at soap-coated surfaces is frequently not easy to establish. On the other hand, oil coats a soap-coated surface readily. For these reasons, oil is usually employed as a co-collector in soap flotation.

Conditioning. The mineral associates of a desired earth-salt mineral are frequently other minerals of the same class, or silicates that are floatable with soap. Concentration becomes primarily conditioning to depress the undesired constituents. If the undesired associate carries a different earth-metal, differential flotation may sometimes be effected by close control of *p*H (Fig. 2). The usual way to prevent flotation of silicate associates is to reduce the solubility of the silicate-mineral surfaces by increasing the concentration of silicate ion in the pulp, by addition of a soluble silicate (*e.g.*, sodium silicate) to the point that an anchored ionized surface is formed. The visual test of this condition is a high degree of dispersion of such silicate particles. Under these circumstances the concentration of available earth-metal ions at the particle surface is very low and sufficient soap coating cannot form on the particles to activate them for bubble or oil attachment.

Undesired earth-metal nonsilicate minerals may be depressed by the so-called metal-silicate treatment (Art. 10).

Desliming is necessary when it is impossible to prevent collector coating of gangue (unwanted) slime. It is always desirable from an operating standpoint because it reduces the quantity of reagent necessary and the presence of slime in the froth increases the difficulty in dropping out granular gangue.

Barite floats readily with fatty-acid collectors and with the sulphate and sulphonate salts of the corresponding alcohols. Optimum *p*H for oleate collectors is 10 to 11. Sodium silicate is a sufficient depressant for iron-silica gangues (*RI 3427*), but calcium-bearing gangues require metal salt-silicate treatment or quebracho, and grade of concentrate is improved by dichromate addition in cleaning. Feeds are usually high-grade (>50% $BaSO_4$) so that stage addition of collector is desirable and oily collectors should be emulsified.

Tall oil at *p*H 7.5 to 9, naphthenic acids, sodium and calcium lauryl sulphate, Emulsol X-1, X-2, K-1031, Alphasol, and Shell 795 are also reported as collectors (*RI 3333, 3425, 3397, 3484*). Concentrate containing 90 to 95% $BaSO_4$ with sp. gr. of 4.2 to 4.3, representing recoveries of 70 to 75%, are reported (*RI 3425; 148 A 291*) in laboratory tests. Norman and Lindsey (*153 A 540*) report separation of barite from silica at <325 m. without desliming, using fatty acid (lauric preferred), sodium silicate and pine oil. Oleic acid is not a good collector to employ when concentrate is to be used for oil-well mud, because of resistance of the concentrate to water wetting; Shell 795 is reported to make wettable concentrate. Siliceous gangue is reported as floating with hydrochloric acid (8 lb. per ton), DP 243 (0.25 lb.), and DP 60 (0.1 lb.), yielding 94% barite and 70% recovery, but the reagent cost is excessive. It is reported in the discussion that a 125-ton all-flotation plant is now treating the same ore (*153 A 545*). Barite is also floatable with lauryl and higher amines; recovery is aided by increasing concentration of either amine or sulphate ion. Ba^{++}, added as $BaCl_2$, reduces floatability (*CU*).

Calcite floats readily from siliceous gangue, using fatty-acid collectors with sodium silicate, lignin sulphonate or dextrin for dispersion, at *p*H 8 to 9.5. Use of this fact is spreading rapidly in preparing cement mixes (see Sec. 3A, Art. 2, for performances). U. S. patents *2,161,010* and *2,161,011* to Breerwood are veritable textbooks for the practice. Procedure usually involves light desliming of a finely ground pulp, flotation of carbonaceous material by starvation amounts of a frother, such as the C_7 to C_{10} monohydric alcohols or cresol, dispersion of the remaining pulp with calcium lignin sulphonate or a dextrin, and thereafter either flotation of calcite by step addition of minute quantities (<0.5 lb. per ton total) of fatty acid emulsified with an alkaline resinate and a frother, leaving mica and quartz in the tailing; or flotation of mica and silicates with cationic reagents at *p*H 7.5 to 8, leaving calcite and iron minerals in the tailing. In either case mica may be floated from quartz and other silicates by starvation quantities (0.05 lb. per ton of feed) of medium-weight amines, *e.g.*, dodecyl amine hydrochloride.

Results reported from LONE STAR CEMENT CO., Argentina, S. A. (*31 PQ 52*), are given in Table 26. Table flotation of deslimed calcite-flint cement rock, using fatty acid + soap (1 lb. per ton) and cheap fuel oil (4 lb.) with soda ash (0.5 lb.), yielded concentrate assaying 99.5% lime rock and 1.7% SiO_2 and recovery of 97.6% (*136 J 221*).

Table 26. Flotation of calcite from cement rock at Lone Star Cement Co.

Material	Percentages				
	Feed	Rough concentrate	Clean concentrate	Combined concentrate	Tailing
SiO_2	30.9	3.4	3.0	3.4	75.7
Fe_2O_3	2.4	0.6	0.8	0.6	3.9
Al_2O_3	2.9	0.3	0.3	0.3	5.9
CaO	33.5	53.9	53.9	53.9	5.2
$CaCO_3$	59.8	96.2	96.2	96.2	9.2
MgO	0.9	0.3	0.6	0.3	1.0
Loss	28.7	41.2	41.0	41.0	9.4
Total	99.3	99.7	99.5	99.5	101.1
Ratio *a*	5.8	3.9	2.8	3.7	7.7

a $SiO_2/(Fe_2O_3 + Al_2O_3)$.

Calcite is also floated by lauryl-amine hydrochloride; the amount required for good collection is reduced from 80 mg. per li. of solution to 40 mg. by co-addition of 10 mg. of Na_2CO_3, and to 20 mg. by 5 mg. of sodium silicate. In the first case the phenomenon is simple common-ion effect; in the second, silicate coating of the calcite precedes the common-ion phenomenon (*CU*).

Celestite is reported (*RI 3628*) as floated from calcite and strontianite at <200-m. and 30% solids using quebracho, oleic acid, and a higher-alcohol frother.

Cryolite is reported floated with fatty acids (*RI 3397*).

Dolomite can be floated by soap flotation (*RI 3314*). It is depressed in soap flotation by metal salt-silicate treatment or by acid dichromate. Selective activation to xanthate ion by treatment with zinc sulphate is reported (*28 ChA 2305*). No commercial operation has been reported (1942).

Fluorspar was floated commercially at 10 plants in the U. S. in 1941 (*143 M & J 80*). Treatment of sulphide-free feed usually involves light desliming, soap and oleic acid as a collector, and use of a dispersant depressor fitted to the gangue. Optimum *p*H is 8 to 9.5.

Silicate gangue is depressed by sodium silicate or quebracho; calcite and barite require metal salt-silicate treatment (*RI 3437*).

A laboratory test to make acid spar from gravity concentrate containing 90% CaF_2 is reported (*RI 3547, 3564*) to have yielded concentrate, after calcination, carrying 98.5% CaF_2 and 0.86% SiO_2, recovery being 82%; reagents were: oleic acid (0.9 lb. per ton), DP 23 (0.25 lb.) and quebracho extract (1 lb. per ton in the rougher and 0.1 lb. per ton in each of four successive cleaning stages). Water should be soft and iron precipitated or complexed (*RI 3437*). Good concentration from calcite gangue without desliming has been reported (*RI 3239*). Mitchell *et al.* (*134 A 100*) found that in floating fluorspar from calcite and quartz with oleic acid as collector, optimum results were obtained at temperatures upward of 140° F. at *p*H = 8.5, with a small amount of sodium silicate added. Sized feeds in the range of 65- to 150-m. gave best grades and recoveries, but good results were obtained on 65~0-m. material.

Gypsum is floatable with the soap-type anionic reagents, preferably oleic acid, with low alkalinity and a controllable frother. Slime feed is difficult to handle, and both it and the fact that the percentage to be floated is high dictate stage addition of the organic reagents. Flotation of siliceous gangue with the cationics Emulsol 660B or DLT 699 has been reported (*RI 3553*), but other cationics (DP 243, Armour 1180, Emulsol 903L) floated gypsum as well as quartz.

Magnesite floats readily with oleic acid, but is not thus separable from calcite, dolomite, talc, and serpentine, which are common associates.

For treatment of such a mixture in Washington ores Doerner and Harris (*Bul P-1 SCW*) floated silicates first with cationic reagents (DP 243 > Emulsol 660B >DPQ) in neutral pulp (*p*H = 7.8), using DP B-23 as a frother and tannic acid as a depressant, then graded up the magnesite underflow by stage addition of oleic acid and sodium silicate. Recovery of MgO was 80% in the cationic float, in the form of an underflow assaying 82% MgO. The first anionic float from this underflow was substantially pure magnesite; continued flotation brought up increasing dolomite. High-grade magnesite rock was treated in a pilot plant by Clemmer *et al.* (*153 A 547*), also to float silica; they found that DLT 699, Emulsol 903L and DP 243 were about equally effective as collectors, that about 1 lb. per ton yielded about 85% of the magnesite in a product containing less than 1% SiO_2 and 2% CaO, and that either tannic acid or caustic starch aided separation.

Phosphates are both froth-floated and table-floated on an extensive commercial scale (Sec. 3, Art. 30). Fatty acids at a *p*H of 8 to 9 obtained with sodium silicate, soda ash or caustic soda, fuel oil, and a rosin or turpentine frother are the usual reagents, the frother being omitted, of course, in table flotation. Cheap carriers of fatty acid, *e.g.*, fish-oil fatty acids, or talloel, are used. Reagent consumption in table flotation is about 1 1/2 to 2 lb. fatty acid, 2 to 4 lb. of a light fuel oil, and 1/2 lb. of caustic soda (*129 A 295*); consumption is materially lowered by re-use of water. Florida feeds are invariably deslimed before conditioning, but Russian apatite ore with nephelite gangue is treated in the presence of the slimes produced by grinding (Sec. 3, Fig. 56). Birch tar is a satisfactory substitute for fatty acids in the Russian practice, but a larger quantity must be used. The phosphate minerals apatite, podolite, staffelite, and kurskite are said to float decreasingly in the order named; their solubilities increase in that order.

Phosphates are depressed by mineral acids and short-chain organic acids. Amine soaps (*U. S. pat. 2,084,415*), aliphatic alcohol esters of higher fatty acids (*U. S. pat. 2,312,466*), and the reaction products of polyethylene polyamines with fatty acids and/or fatty oils (*U. S. pat. 2,521,186*) as collectors; flotation of feeds sized hydraulically (*U. S. pat. 2,156,245*); use of C_{12} and higher xanthates (*U. S. pat. 2,162,496*); preflotation of clay with short-chain amines followed by quarts flotation with long-chain cationics (*U. S. pat. 2,185,224*); prewashing of the feed with caustic alkali solution and draining before flotation with a long-chain amine (*U. S. pat. 2,313,360*); and similar treatment except that the prewash is with alkali and fatty acid (*U. S. pat. 2,288,287*), are a few of the variants from standard practice that have been suggested.

Strontianite is floatable with oleic acid.

Soluble Salts

All flotation is carried out in aqueous solutions substantially saturated at the time of the flotation operation with all of the chemical species comprising the suspended solids. Flotation of the so-called soluble salts depends on similar saturation of the flotation liquor. Flotation of sylvite from halite and the reverse operation are both being practiced commercially in the recovery of potash from its ores. Laboratory flotation of borax minerals and of ammonium chloride from alkali-metal nitrates have been described (*RI 3333*). Best feed size is <35-m. Conditioning with oily reagents should be effected in thick pulps. Stepwise addition of frothers and collectors is desirable.

Halite is floated from sylvite by fatty acids in a brine saturated with both minerals.

Naphthenic and tar acids (*RI 3397; U. S. pat. 2,222,332*); soaps soluble in salt water, *e.g.*, palm-kernel oil soap or coconut oil soap, resin soaps and alkali resinates (*U. S. pat. 2,188,933, 2,222,331*); and the alkylamine soaps and Turkey-red oil (*RI 3271*) are also described as collectors. Sodium silicate may aid (*RI 3397*). Clayey slimes usually go with the halite. Starvation quantities of soap or fatty acid ± sodium silicate are suggested to float such slimes preferentially (*U. S. pat. 2,175,178*). Alizarin oil and turf tar have been used experimentally in Russia for flotation of earthy impurities from halite (*PC* from N. Vishnevsky). Weinig (*U. S. pat. 2,188,933*) states that lead or bismuth salts in the solution (*e.g.*, 1.5 gm. dissolved Pb per li. of brine) reduces the amount of collector required and increases speed of flotation. He says further that the use of an independent frother, such as cresol, in amounts ranging from 0.5 to 1 lb. per ton of solid, increased selectivity and decreased the amount of collector required from 4 lb. to 1.6 lb. Halite is floated from sodium nitrate by capric or oleic acid or betaine hydrochloride and lead nitrate. Use of oleic acid or oleates with a frother such as cresol or C_7-C_{14} alcohols to float calcium sulphates from halite in saturated brines is described by Perkins (*U. S. pat. 2, 340,613*).

Sylvite is floated from halite and from small amounts of clay by the sulphates of the C_8 to C_{12} aliphatic alcohols in amounts of 1 lb. or less per ton; shorter-chain products require larger quantities, and longer-chain compounds are too insoluble for rapid and effective use (*RI 3271; U. S. pat. Reissue 21,566*).

The process was used at POTASH COMPANY OF AMERICA. Feed should be at least <35-m. and better <48-m. and pulp density about 25% solids. Recovery of 93.6% KCl in a concentrate containing 96% KCl is reported on a feed assaying 43% KCl. Table flotation using 20 lb. fuel oil in addition to the sulphate gave about the same yield but concentrate of about 10% lower grade on 10~48-m. feed of about the same assay. Fatty acids, fatty-acid soaps, and aromatic sulphonates were investigated and found unsatisfactory. Amine salts C_8 to C_{12} range *e.g.*, octylamine hydrochloride, are reported to give good recovery and good grade of concentrate (*U. S. pat. 2,088,325*). Water-soluble salts of straight-chain acyl derivatives of ethylene diamine, in which the acyl group derives from a single fatty acid of 10 to 18 carbon atoms, or from mixtures of fatty acids such as occur in natural oils and waxes, are also recommended as sylvite collectors in the presence of halite (*U. S. pat. 2,329,149*). Tartaron (*U. S. pat. 2,330,158*) recommends desliming before final grinding. Cole *et al.* (*U. S. pat. 2,322,789*) recommend the use of dextrin as a conditioning agent with amine collectors.

Gangue minerals accompanying sylvite and halite, *e.g.*, clays, gypsum, anhydrite, iron and manganese oxides, polyhalite, langbeinite, leonite, and glaserite, are said to be floated from sylvite and halite in saturated brines thereof by an alkali resinate (*U. S. pat. 2,222,330*).

Langbeinite is reported (*RI 3300*) as having been floated from halite with sodium octadecyl sulphate. Tartaron *et al.* (*U. S. pat. 2,297,664*) recommend sulphonates of the higher fatty acids for langbeinite and sylvite.

Borax and boric acid are reported as floated from halite by oleic acid or with an aromatic amine (*40 CIMM 691*); flotation of boric acid with pine oil and cresylic acid is described (*RI 3488*); Shelton (*U. S. pat. 2,317,413*) asserts that boric acid is AUTO-FLOATABLE, *i.e.;* floats without a collector or frothing agent, in saturated solution of boric acid, and that depression of clayey slimes and the like is aided by use of metallic salts, the cations of which form insoluble borates, *e.g.*, Al and Cu, or of colloidal depressants (Art. 10), or of both jointly, or of sodium silicate. Shelton points out also that the boric acid may be formed by reaction of other borax compounds with inorganic acids.

Potassium sulphate is said to float readily with fatty- and naphthenic-acid collectors.

Sodium bicarbonate is reported readily separated from halite by capric or oleic acid or by betaine hydrochloride.

Sodium sulphate is claimed (*U. S. pat. 2,310,315*) to be separated from sodium chloride in a brine made alkaline with sodium hydroxide, using a fatty acid or an oil containing fatty acid and a salt containing Ba, Cu, Sr, Ti, or Fe^{+++}.

53. SILICATE MINERALS

Silicate minerals comprise quartz and the silicate salts of both earth and heavy-metal minerals. In general the latter are too insoluble to free surface ions in sufficient quantities for effective collector coating. Most of the silicates containing earth metals are sufficiently soluble, however, to free ions at the surface and are, therefore, amenable to flotation. Furthermore, since the silicate salts of the cationic collectors are, in general, exceptionally insoluble, they, as well as the soaps, are available for collection.

Choice of collector depends, from the technical standpoint, upon the relative quantities of silicate and nonsilicate minerals present in the feed. From the standpoint of cell operation and collector consumption, that ingredient should be floated which is present in the cell in smaller quantity. On the other hand, the cationic collectors are more expensive, in general, than the anionics, and more securely protected by patents, whence economic factors are, at present (1942), frequently controlling, and anionic collectors are used where technology alone would indicate cationic flotation.

In soap flotation of silicate minerals the procedures and techniques are much the same as those already discussed for nonsilicate earth salts; control of *p*H and depression of unwanted minerals are the primary problems. In cationic flotation the problem is selection of the proper cationic reagent, there being quite definite differences between the floatabilities of the various silica-containing minerals with different cationic collectors. Water should be soft and free of heavy-metal ions; surfaces should be free of slime coating and pulps preferably deslimed; quantity of collector used should be a minimum, particularly if concentrate is to be cleaned.

Patek (*112 A 486*) rates the relative floatabilities of 20 silicates by oleic acid in acid pulps, on the basis of flotation tests on 80~200-m. thoroughly deslimed artificial mixtures, as follows: zircon > tourmaline > almandite > topaz > olivine > kyanite > epidote > tremolite > titanite > rhodonite > augite > anorthite > spodumene > biotite > muscovite = labradorite > nephelite > albite > orthoclase = quartz. Separation could not be effected satisfactorily between minerals adjacent in the list, but could, in general, between those three or more places apart, *e.g.*, muscovite and anorthite.

Andalusite floats with soaps. Norman *et al.* (*134 A 76*) report flotation of this mineral and corundum from quartz, in a mixed concentrate, in acid pulp (2 lb. H_2SO_4), using tetrasodium pyrophosphate (1 lb. to complex soluble iron), sodium silicofluoride (3 lb. to complex soluble aluminum), and naphthenic soap (3 lb.) as frother and collector. Quartz was floated from the andalusite by laurylamine hydrochloride.

Beryl ore in a deslimed pulp, with oleic acid and DP 23, yielded concentrate assaying 6% BeO with 87% recovery. Beryl is depressed by sodium silicate, soda ash, or caustic soda (*RI 3547, 3564*).

Brucite, olivine, and other magnesium minerals are said to be floated from cement rocks by the use of cresylic acid and a hydrocarbon with an alkaline earth soap in conjunction with a salt of the lead-thallium class and a xanthate, or with the reaction product of these latter substances (*U. S. pat. 2,208,143*).

Clays differ widely in the kind and proportions of clay minerals present, in the degree of dispersion, and in the amount of included impurities such as quartz, feldspar, mica, etc. They can be floated with amines and with the ammonium and pyridinium compounds.

Selective flotation of clay from other silicates is asserted (*U. S. pat. 2,185,224*) using short-chain amines ($<C_5$); also with 25 lb. per ton of raw waste liquor from sulphite treatment of spruce and hemlock pulps (*U. S. pat. 2,249,569*), leaving quartz, mica, etc., depressed. Depression of clay and flotation of mica, using DP 243 as collector and Calgon and HCl for conditioning, has been described (*RI 3427*). Removal of limonite, pyrite and such "speck" material from clays in Macquisten tubes, presumably with anionic collectors, is also recorded (*138 #2 J 93*).

Corundum is floatable with soaps (see Andalusite).

Feldspar is reported floatable by both soaps and cationic reagents.

Lead nitrate is a strong activator with soap; copper salts also activate; $Al(NO_3)_3$ depresses in acid solutions, if the feldspar is clean, and activates in slightly alkaline pulps; iron salts act like aluminum; acid depresses altered feldspars (*RI 3558*). With cationic collectors quartz tends to float selectively in slightly alkaline pulps, but in acidic pulps generally, especially in those acidified with fluorine-bearing acids, feldspar floats selectively. In general, also, feldspar floats more readily with the cationic collectors, under conditions where quartz and feldspar will both float, so that use of cationics of lower hydrocarbon weights or in relatively starvation quantities favors selective flotation of feldspar. O'Meara *et al.* (*Bul 18 ACerS 286*) and Smith *et al.* (*23 ACerS 339*) describe extensive laboratory and pilot tests both by froth-flotation at <48-m. and table-flotation at 20~48-m. Smith tabled a feed containing iron-contaminated silicates and quartz, first conditioning with oleic acid (2 lb. per ton) and Diesel oil (4 lb.) and tabling to remove iron, then with hydrofluoric acid (4 lb.), laurylamine hydrochloride (2 lb.), and Diesel oil (4 lb.) to take off feldspar. Feed containing 0.87% Fe_2O_3, 76% feldspar, and 19% quartz yielded 10 parts iron concentrate assaying 4.1% Fe_2O_3, 29% feldspar, and 16% quartz; 73 parts of feldspar concentrate assaying 98% feldspar, 2% quartz, and 0.52% Fe_2O_3; and 16 parts of quartz tailing containing 95% quartz. Flotation of <48-m. from the same feed was done in three stages: Tributylamine, 0.33 lb. per ton, was used to float off slime and save on quantities of subsequent reagents; an iron float was next made with oleic acid (2 lb.); a final feldspar float required 4 lb. hydrofluoric acid and 2 lb. laurylamine hydrochloride. Feed assayed substantially as above; combined iron-slime floats comprised 19 parts and carried 2.8% Fe_2O_3, 75% feldspar, and 7% quartz; 63 parts of feldspar concentrate assayed 99% feldspar, 1% quartz, and 0.41% Fe_2O_3; tailing carried 98.6% quartz. Tabling a clean feed carrying about 3% mica with the balance about 50–50 quartz and albite, O'Meara (*ibid.*) made concentrate assaying 19.2% Al_2O_3 and tailing containing 0.89% Al_2O_3 from feed carrying 9.1%, representing 95% recovery, using 2.3 lb. per ton HF, 0.24 lb. laurylamine hydrochloride, and 5.4 lb. fuel oil. Results by flotation on <48-m. feed were slightly better. On a badly weathered potash feldspar containing about 2% mica and a 50–50 quartz-feldspar ratio, conditioning with 3 lb. per ton HF, 0.48 lb. laurylamine hydrochloride, and 10 lb. fuel oil, table concentrate contained 18.6% Al_2O_3 and tailing 0.1% from 13% feed. Flotation of <48-m. material, using 3 lb. HF and 0.8 lb. of the same amine, gave concentrate assaying 19.2% Al_2O_3 and tailing carrying 1.4% from 15.5% feed. Cleaning was unnecessary. Tests with varying amounts of hydrofluoric acid in flotation with the laurylamine showed peaks of both recovery and grade at about 3 lb. per ton.

With hydrochloric acid, grade of concentrate rose from 10 to 16% Al_2O_3 and recovery fell from 95 to 50% over the *p*H change from 6 to 2. The more extensively altered the feldspar was, the greater was the tendency for quartz to float, even in acid pulps. This was attributed to coating of quartz by the slimes and to activation of quartz by iron and aluminum salts. For satisfactory feldspar separation it was necessary to disperse the slimes with dispersion agents ± attrition mixing, and to add salts or acids that would form complex or slightly ionized salts with iron and aluminum, this being the supposed principal function of the fluorine-bearing conditioners. Reagent consumption by micas and other feldspar decomposition products is excessive; such materials should be dispersed, and decanted, floated with short-chain amines, or tabled with the same conditioner plus fuel oil. Such treatment reduced consumption of laurylamine in subsequent feldspar flotation from 6 lb. per ton to 0.2 lb. in one instance.

Kyanite is floated with anionic reagents, using sodium silicate or a phosphate salt for dispersion, ± sodium carbonate or hydroxide for protection and ± an auxiliary frother, *e.g.*, pine oil.

At Celo Mines (*RI 3473*) sulphides and biotite are floated first with Aerofloat and laurylamine hydrochloride; then kyanite is floated with oleic acid and Calgon, and cleaned with further addition of Calgon. Concentrate is about 97% kyanite and 0.8% Fe_2O_3 with recovery about 90%. Feed size is 2% >65-m. and 60 <200-m.

Acid may be useful in cleaning. Tartaron (*U. S. pat. 2,305,502*) recommends a short pre-treatment of deslimed kyanite pulp with strong acid and subsequent washing out of the acid before flotation with fatty acid and a frother. Tartaron (*U. S. pat. 2,289,741*) recommends analogous pre-treatment with caustic alkali. Dean and Hersberger (*134 A 85*) report the use of a slightly acid circuit to depress iron minerals as well as quartz when using oleic acid as collector. Use of a cationic reagent (Emulsol 660B) to float siliceous gangue and leave enriched kyanite is reported (*40 CIMM 691*).

Mica may be floated by either anionic (fatty acid) or cationic collectors. It is depressed by lactic acid, starch, and by organic colloidal substances such as glue, tannic acid, etc. (*RI 3239*). Flotation with cationics should be with short-chain amines or with starvation quantities of the longer-chain amines, using depressants, *e.g.*, acid ± aluminum sulphate for depression of granular silicates. Lead nitrate is reported (*40 CIMM 691*) as an activator.

Tartaron (*U. S. pat. 2,226,103*) recommends flotation of mica from quartz, feldspar, and kaolin with an alkaline resinate in a dilute pulp. Tartaron and Cole (*U. S. pat. 2,303,962*) recommend activation of the mica with alkaline earth compounds. Norman *et al.* (*134 A 68*) report flotation of vermiculite from granular silicates by thorough desliming, either by attrition or hydrofluoric acid, conditioning with a small amount of a long-chain amine and oil in the presence of aluminum sulphate and sulphuric acid, and tabling. They assert this to be a general method for separation of the micas other than biotite from other silicates. Desliming is highly desirable; if the mica is slime coated, an alkaline dispersant and attrition mixing should precede desliming. Tabular shape permits tabling at as coarse as 10-m. (4- to 6-m. for vermiculite) and floating at 35-m. maximum, but tabling at coarse sizes requires 2 to 4 times as much oil (14 to 28 lb. per ton) as at finer sizes (*RI 3558*). Biotite is less floatable than muscovite.

At Pecos (*IC 6605*) mica was removed before lead flotation using 0.15 lb. per ton of pale cresylic acid as the only organic reagent added. The operation required that the quantities of lime and zinc sulphate be held down in the lead conditioner as both depressed mica, the lime seriously. When attempt was made to depress mica with lime, the amount required was so great that galena also was depressed.

Quartz is more resistant to flotation than the earth silicates, but floats directly with the more powerful cationics (long-chain amines, pyridinium, and substituted ammonium compounds). It may be activated for anionic flotation by heavy-metal ions, by Ba ion in alkaline solutions, and by Al ion over a wide *p*H range. Oil aids bubble attachment with either type of collector. Depression is aided by acid and by precipitation or complexing of dissolved activating ions; also by argol, citric acid, and the organic colloids of the glue-tannic acid group (*RI 3397*). Dispersion is readily effected by the alkaline silicates and phosphates.

Betaine N (Art. 5) has been recommended for flotation of quartz from nonmagnetic iron minerals (*U. S. pat. 2,217,684*). Norman *et al.* (*134 A 72*) assert the general rule that the quaternary ammonium bases and their salts should be used for flotation of quartz and granular silicates from nonsilicates. Kirby (*U. S. pat. 2,341,046*) describes the use of carbohydrate colloids of the type of tannic, pectic, and alginic acids and their water-soluble salts, and gums containing them, in conjunction with amine-type collectors, in flotation of quartz from carbonates and oxides. Lonts (*U. S. pat. 2,337,118*) describes the use of acids of the type of tartaric and citric, and their water-soluble salts and amides, in the same way, in the same service.

Sillimanite was floated from schist in a deslimed <65-m. pulp, using soda ash and oleic acid, yielding 95% sillimanite in concentrate and 90% recovery on the sands (*RI 3564*). Flotation by cationics is reported (*140 #3 J 42*).

Slimes comprise generally a heterogeny of secondary silicates, usually more or less hydrated, plus, in many instances, considerable quantities of iron oxides. Nearly all of the

components of such slimes are susceptible to coating by fatty-acid collectors, with the result that they consume large quantities of collector because of their great surface, they show up in the froth, and they largely exclude granular material therefrom so long as they are present in the pulp. Fortunately they contain little or nothing of value in most nonsulphide flotation and can, therefore, be discarded with considerable economy. They do not float (become water-repellent) with sulphydrate collectors, hence, if they are dispersed, as is readily done with sodium silicate or low concentrations of hydroxyl ion, they do not enter the froth except under over-frothing conditions or as they are classified upward by excessive aeration. Quebracho is a common, cheap, and useful dispersant in nonsulphide flotation (*RI 3437*). The silicate constituents float very easily with cationic collectors, and must be removed both for economy of reagent and in the interest of high-grade concentrate before the powerful cationics are added; desliming or flotation with short-chain amines effects this. They tend to coat granular materials and thereby affect their responses to collectors. Their flocculation in sulphide flotation tends to entrap and enclose sulphide values in the floccules and to cause coating of sulphides.

Carbonaceous slimes are depressed by soluble starch (*40 CIMM 691*) or by lignin sulphonates (*U. S. pats. 2,161,010–1*). At FLIN FLON talcy and micaceous slimes are floated, prior to sulphide flotation, using starch as a depressant for granular materials, by lubricant, accidentally introduced, as the collector (*RI 3397*).

Spodumene usually occurs with feldspars, mica, and quartz plus small amounts of iron and manganese oxides. If unweathered, it is floatable from the other silicates by soap flotation, but if weathering has proceeded to any considerable extent, the weathered spodumene coats the other minerals, either in the ground or in preparation for flotation, to such an extent that all of the ore floats alike with soap.

Norman and Gieseke (*148 A 347*) report tests in which heavily weathered rock was attrition-cleaned at 50% solids with 6 lb. NaOH for 1 hr. in an agitation-froth beater box, deslimed, washed, and floated with oleic acid (0.8 to 1.5 lb.) and pine oil, making concentrate assaying 5.4% LiO_2 and tailing of 0.49%. Optimum *p*H was between 6.5 and 8.5. Concentrates assaying 90 to 95% spodumene and tailing containing about 1% spodumene were said to be easy to obtain. Naphthenic soap with sodium silicofluoride in acid pulp gave somewhat lower recovery but a slightly higher grade of concentrate. Other collectors effective with the cleaned feeds were sodium and ammonium oleates, paper-mill soaps, and fatty acids, in neutral and slightly alkaline pulps; also naphthenic acids, sulphonated and phosphorated castor oils, and ammonium sulphoricinoleate, in acid pulps. Mica could be thrown into the spodumene concentrate by adding about 0.1 lb. of C_{18} amine; it was thereafter removed by cleaning in acid pulp, wherein the spodumene was depressed. Clean feldspar was floated from mica-free tailing with laurylamine hydrochloride or C_{18} amine; feldspar was floatable with the spodumene and mica by adding more of the C_{18} amine in the roughing float, in both cases using HF as a conditioner (5 to 10 lb.). Aluminum nitrate is reported as a depressant for spodumene at *p*H < 7 (*40 CIMM 691*).

Talc is so readily contaminated with fatty-acid collectors that it is activated in almost any ore before it gets to the flotation machines and is, therefore, floatable by the addition of frothing agent alone. It is also readily coated by cationic reagents (*e.g.*, DP 243), yielding a good grade of concentrate and good recovery (*RI 3484*).

Separation from magnesite with kerosene emulsified with Emulsol X-1, using sodium silicate and soda ash for dispersion, is reported (*RI 3314*). At EASTERN MAGNESIA TALC CO. (*Tref. 2/40*) 0.1 lb. per ton of a sulphonated petroleum fraction (C_{14} aver.) is used as the sole reagent for the same separation. Talc is depressed by starch (*RI 3436*), and by organic colloids (*U. S. pat. 2,070,076*). Norman *et al.* (*Bul 18 ACerS 292*) report on laboratory separations respectively from tremolite ± serpentine; limestone; and quartz, feldspar, and tremolite. They found pine oil sufficient for flotation of foliated talc, and amines better for fibrous talc. Quartz did not require special depressants; tremolite and dolomite required acid or alkali. A "mixture of nitrogenous bases from recovered oil" was the best collector; diamyl amine next. None of the talc concentrate was of high purity. Sodium carbonate was the best dispersant and yielded cleanest concentrate; grinding with 2 lb. per ton, settling 30 min., decanting, and floating the sand was the best operation. Norman and Ralston (*134 A 73*) assert the general rule that the short-chain amines will float silicates containing more than 5% water of hydration (*e.g.*, talc, pyrophyllite, sericite, clays, and weathered mica) but do not float those less hydrated.

Tourmaline floats with soap (*40 CIMM 691*).
Wollastonite is collector-coated by laurylamine hydrochloride (*CU*).
Zircon is floatable, after a fashion, from mica and kaolin with oleic acid (*RI 3473*).

Zircon is said to be separable from rutile with sodium oleate plus oleic or other unsaturated fatty acid plus a frother, or with soap plus sodium oleyl sulphate, in alkaline pulps (*40 CIMM 691*). Order of floatability is said to be zircon > monazite > rutile > ilmenite with soap collector; these differences are accentuated by draining after conditioning, subjecting the sand to an acid wash, and refloating in slightly acid or neutral pulp with a small amount of frothing agent.

54. INERT MINERALS

The minerals in this class comprise a small group, unrelated chemically, which are substantially chemically inert in dilute aqueous solutions at atmospheric temperatures. The best known are coal, graphite, and sulphur; others are the solid hydrocarbons, *e.g.*, gilsonite, ozokerite, etc. These minerals have the outstanding property, from a flotation standpoint, that they are preferentially wetted by neutral hydrocarbon oils, and by certain other oily substances, in the presence of water. Gilsonite and ozokerite attach to air bubbles in clean water, through a wide *p*H range, and can, therefore, be froth-floated with a frothing agent only, and can be table-floated with preparation directed solely to depression of the accompanying minerals. The other minerals require oil filming, but the oil may, in the case of graphite and the fat coals, be largely or entirely supplied by contamination in mining or by the minute amounts of insoluble oil carried in the frothing agent.

Graphite, particularly the flake variety, is readily floated; the difficulty in treatment is to keep down gangue which is smeared by the graphite in crushing. Pine oil, which is the preferred frother, is usually the only organic reagent needed; kerosene or other hydrocarbon aids recovery and is necessary for coarse flake but decreases grade of concentrate because it tends to float graphite-smeared gangue. Tar oils float entirely too much gangue. Smeared gangue may be depressed by effecting dispersion of the smearing graphite with sodium silicate in slightly alkaline pulp, but the usual procedure is to acidify to *p*H 3 to 5 and work up grade by three or four cleanings. The froths with acid pulps are more easily cleaned than the relatively tough, small-bubble floats obtained in alkaline pulp. Cyanide is effective to depress pyrite (*RI 3225*). Field experience is that the large-bubble, brittle, evanescent froth induced by high acidity is not well handled in pneumatic cells, so that subaeration machines predominate.

Clemmer *et al.* (*Bul 49 GSA*) found that soda ash, sodium silicate, caustic soda, or cyanide could be used for depression of coarse gangue, if addition was carefully controlled, and that they had the additional advantage over acid of dispersing clay slimes and keeping them out of concentrate. The writers state that the graphite floats over the *p*H range 3 to 9 and that grade of concentrate and recovery were equally good in laboratory runs at *p*H 4 and 7.5 on four different and presumably random samples.

Depression of graphite and of so-called carbonaceous gangues is important in some ores. Starch, glue (*U. S. pat. 1,906,029, RI 3397*), and other organic colloid-type depressants, and lignin sulphonates (*U. S. pat. 2,161,010*) are all more or less effective. Use of a reducing gas such as SO_2, H_2S, CO, or natural gas has been proposed (*U. S. pat. 2,154,092*).

Flotation of carbonaceous material from electric furnace waste containing cryolite and alumina, using pine oil (0.08 lb. per ton), hardwood creosote (0.24 lb.), and kerosene (0.12 lb.), has been described (*U. S. pat. 2,183,500*). Flotation of coke and other carbonaceous residues in crude ultramarine pigment using a hydrocarbon collector and a frothing agent is also described (*U. S. pat. 2,144,115*).

Coal floats readily with a neutral collector and a frother; in general the floatability increases with increase in volatile content except that the trend is reversed when the low-rank earthy sub-bituminous coals and lignites are reached. Freshly mined coal is uniformly more easily floated than dump coal; the latter tends to dull either through the formation of oxidation products or deposition of scale from soluble salts leached out of material accompanying the coal.

The problem in coal flotation is normally economic rather than technical. Flotation is applicable only when the finished coal is required to be fine, as in coke-oven feed, gas making, or for powdered fuel; or where a market for the fine coal can be developed, *e.g.*, anthracite briquettes. For this reason the principal use of flotation in coal washing has been in treatment of the fines of coking coals. Here the process clearly more than pays its way in reduction of ash, sulphur, and phosphorus, and in the reduction in porosity and increase in strength of the coke that flows from the admixture of the fine floated coal with crushed slack. In general it may be predicted that raw coking-coal fines carrying 10 to 15% ash can be separated into a concentrate of 3 to 6% ash content, a steam-coal middling of 10 to 20% ash, and a refuse containing 70 to 80% ash.

Dewatering concentrate is a serious item of expense. The floated coal holds moisture obstinately, up to as much as 30% with feeds that have not been deslimed. Dewatering costs may run up to 25¢ per ton for filtration and an additional 10¢ per ton for heat drying of filter cake. At one plant (*26 JCM 125*) the float concentrate was air flocculated by overoiling and heating, whereupon gravity filtration on coco mat was feasible.

Maximum size readily floatable in a froth is 10-m.; 6-m. can be froth floated but flotation conditions must be so intense that fine bone and carbonaceous refuse are also carried up. Table flotation is to be preferred for coarse feeds.

Yield and concentrate grade vary inversely, as is usual in all concentration. The best procedure is to rough out the finer high-grade coal with a small quantity of frother and very little or no collector, making finished concentrate on the primary rougher; scavenge fines in the second cell, and clean once,

with return of cleaner tailing to the scavenger; scavenge coarse material in the final cell, and clean in a separate cleaner, discharging tailing from this cleaner and from the second scavenger. Some plants treating coal in which impurities are largely in the fines have fed <3/8-in. material to the rougher and screened final tailing to recover the coarse coal, thus obviating the screening of a considerable tonnage of fine material (*67 IME 374*).

When elimination of pyrite, phosphorus, and clay are important, best results will be obtained by use of a petroleum or neutral tar oil as a collector and a relatively pure cresylic acid as a frother. This eliminates carboxylic and sulphydric collectors except in so far as the former are introduced with lubricants. Step addition of both collector and frother is desirable. Total requirement of organic reagent should not exceed 1 to 2 lb. per ton of feed. Sodium silicate is a satisfactory dispersant for clayey slimes. Lime is the usual pyrite depressant, but its use is limited by the fact that *p*H greater than 8.5 tends to decrease recovery and drop grade. Cyanide may be used, but considerable quantities are required on account of the *p*H limitation. Ferrous sulphate has been recommended as a pyrite depressant (*RI 3263*). Pyrite may be floated preferentially from the less floatable coals, if they are not contaminated with too much oily lubricant, by the use of xanthate and pine oil, using sodium silicate or an organic colloid (*e.g.*, glue or starch) as depressants. Fusain is depressed by starch under gentle collecting conditions, as with cresol alone.

Various procedures suggested in patents are: to emulsify the oily collector and cause frothing by a salt of a sulphonated alcohol, preferably in the C_{12} to C_{18} range (*U. S. pat. 2,112,362*); for a long-range anthracite culm, first float a high-grade concentrate with an alcohol in the C_7 to C_{10} range, deslime the residue with sodium silicate and float the sandy material with 5 lb. per ton of kerosene (*U. S. pat. 2,136,341*); or size the culm into two or more grades and float each separately (*U. S. pat. 2,136,074*); for raw coal, stage addition of up to 1 gal. per ton of a mixture of coal-tar creosote, fuel oil, and kerosene (*U. S. pat. 2,028,742*).

Costs reported range from 15 to 60¢ per ton of feed, but could undoubtedly be lowered.

Sulphur is floated at OLLAGUE, Chile, with creosote, using sodium silicate for dispersion; 90% recovery in an 80% S concentrate from a feed containing 40% S is reported.

SECTION 13

ELECTRICAL CONCENTRATION

REVISED BY

M. D. HASSIALIS, ASSOCIATE IN MINERAL DRESSING,

SCHOOL OF MINES, COLUMBIA UNIVERSITY

ART.		PAGE
	MAGNETIC SEPARATION	
1.	Introduction	01
2.	Magnetic theory	02
3.	Principles of magnetic separation	10
4.	Holding-type separators	15
5.	Pick-up separators	21
6.	Roasting to magnetize	33
7.	Guard magnets	34
8.	Magnetic flocculation	37
9.	Design of magnetic separators	37
	ELECTROSTATIC SEPARATION	
10.	Principles	40
11.	Machines	42

Electrical concentration is effected by utilizing the differential responses of minerals to electrical forces. The methods are classed as magnetic or electrostatic, according to the particular form of electrical force employed.

MAGNETIC SEPARATION

Magnetic separation utilizes the force of a magnetic field, coacting with some other force, to produce differential movements of mineral grains through the field. Fundamentally, differences in magnetic permeability of minerals constitute the basis for separation, but practically separation is influenced by the specific gravity, size, and purity of the mineral grains, and by mechanical and electrical attributes of the separator.

1. INTRODUCTION

A magnetic field exerts a force on a permeable particle within it only if the field varies in uniformity. The magnitude of the force exerted, all other things being equal, depends upon the uniformity gradient of the field, and upon the departure from uniformity caused by the particle. The force is invariably directed from a region of low magnetic intensity toward an adjacent region of higher intensity. The steeper the intensity gradient between these regions the greater the force.

Magnets are uncharged bodies which, under suitable electrical conditions, attract or repel one another. The alignment of a freely suspended magnet in the magnetic meridian (roughly north-south in middle latitudes) is a familiar result of the magnetic forces exerted by the earth, itself a vast magnet, upon the suspended magnet. The POLES of a magnet are the points of convergence of lines so drawn as to have everywhere the direction assumed by a magnetic needle when suspended at different points in the neighborhood of the magnet. By convention, a NORTH or POSITIVE pole is one which turns toward the north geographical pole, and a SOUTH or NEGATIVE pole toward the south geographical pole.

Magnetic permeability is a measure of the ease with which magnetic properties may be induced in a substance by the action of a magnetic field. All substances are permeable to some extent; they are classified as PARAMAGNETIC or DIAMAGNETIC, respectively, when more or less permeable than free space. Very strongly paramagnetic materials are called FERROMAGNETIC. The magnetic force exerted on a particle in a given magnetic field depends upon the relative permeabilities of the particle and the surrounding medium; when the permeability of the particle exceeds that of the medium, the force is attraction: conversely repulsion occurs. Since air is the usual test medium, substances attracted to

the poles of a magnet are rated as paramagnetic, those repelled as diamagnetic. A better classification for ore-dressing purposes is STRONGLY MAGNETIC (corresponding to ferromagnetic), WEAKLY MAGNETIC and NONMAGNETIC, as in Table 1. The position of a given mineral in this list may be altered by small amounts of impurities, either chemically or mechanically held.

Table 1. Relative magnetic attractability of minerals. (*After Davis, Bul 7 MSM*)

	Substance	Relative attractability
Strongly magnetic..	Iron (taken as standard)...	100.00
	Magnetite....	40.18
	Franklinite....	35.38
	Ilmenite.....	24.70
Weakly magnetic..	Pyrrhotite....	6.69
	Siderite.....	1.82
	Hematite.....	1.32
	Zircon.....	1.01
	Limonite.....	0.84
	Corundum....	0.83
	Pyrolusite....	0.71
	Manganite....	0.52
	Calamine.....	0.51
Non-magnetic..	Garnet.....	0.40
	Quartz.....	0.37
	Rutile.....	0.37
	Cerussite.....	0.30
	Cerargyrite...	0.28
	Argentite.....	0.27
	Orpiment.....	0.24
	Pyrite.....	0.23
	Sphalerite.....	0.23
	Molybdenite..	0.23
	Dolomite.....	0.22
	Bornite.....	0.22
	Apatite.....	0.21
	Willemite.....	0.21
	Tetrahedrite...	0.21
	Talc.....	0.15
	Arsenopyrite..	0.15
	Magnesite....	0.15
	Chalcopyrite..	0.14
	Gypsum.....	0.12
	Fluorite.....	0.11
	Zincite.....	0.10
	Celestite.....	0.10
	Cinnabar.....	0.10
	Chalcocite....	0.09
	Cuprite.....	0.08
	Smithsonite...	0.07
	Orthoclase....	0.05
	Stibnite.....	0.05
	Cryolite.....	0.05
	Enargite.....	0.05
	Senarmontite..	0.05
	Galena.....	0.04
	Niccolite.....	0.04
	Calcite.....	0.03
	Witherite.....	0.02

Mixtures susceptible to magnetic separation are normally those in which valuable mineral and gangue fall in different classes in Table 1. Theoretically, it should be possible to separate materials whose permeabilities are in the ratio of 5 or 10 : 1 (magnetic separation of atomic mixtures of even lower ratios have been performed successfully), but practically success usually depends on other factors. Impurities in natural minerals may so alter permeabilities as to render published indices of susceptibility unreliable. Thus iron-stained quartz and iron-bearing muscovite mica are sometimes separated from other nonmagnetic minerals, iron-bearing sphalerite is separated from pyrite and quartz, iron-bearing garnet from quartz and other acid silicates and corundum, rutile (probably ilmenite-bearing) from apatite, and a magnetic galena occurs at one of the Coeur d'Alene mines. Hence, except for such separations as of strongly magnetic from clearly nonmagnetic substances, the safest procedure in determining whether a mixture is separable by magnet is to test.

Most important magnetic separations in practice are those of the iron ores, *e.g.*, magnetites from quartz, feldspars, hornblende, garnet, and apatite; roasted hematite and limonite from silica; roasted siderite from siliceous and carbonaceous gangue; roasted pyrite from blende unaltered in the roasting; pyrrhotite from blende, and from quartz and basic silicates. Other commercial separations of metallic minerals are: franklinite from willemite, zincite, and calcite; pyrolusite and psilomelane from siliceous gangue and limonite; chromite from silicates; rutile from apatite; copper carbonates from siliceous gangue; wolframite from cassiterite; magnetite and ilmenite from monazite sands; ilmenite from cassiterite concentrate; rutile, brookite, and ilmenite from orthoclase feldspar; wolframite from a tungsten-bismuth concentrate; and tramp iron from ores and ashes. In the field of industrial minerals magnetic processes are used to remove magnetic materials from concentrate, *e.g.*, iron introduced in mining and grinding from body slip or glaze, China clay, or fireclay; iron and magnetic pyrite from coal; siderite from cryolite; iron, and such iron-bearing minerals as biotite, garnet, tourmaline, and some muscovites from feldspar; iron, magnetite, and pyrrhotite from garnet; garnet and mica in a gravity concentrate from kyanite; magnetite and muscovite from nepheline; iron from salt; magnetite and ilmenite from glass sand; iron from sillimanite or andalusite; burnt magnesite from lime and alumina; garnets and basic silicates from diamondiferous sands; garnets from metamorphic silicates; garnet from corundum; and lava from leucite.

2. MAGNETIC THEORY

Units. Great confusion exists in the literature of electricity owing to multiplicity of systems of units and to lack of uniformity in nomenclature and symbolic representation. Electric and magnetic systems of units superimpose on the fundamental mechanical units of length, mass, and time certain units of electrical measurement. When the added units

are themselves fundamental, the system is ABSOLUTE (see ***CGSM system,*** below). When the system is modified in order to bring the numerical value of some derived unit to one, when the fundamental units in the derivation equation have unit values, the system is said to be RATIONALIZED. A rationalized system of electromagnetic units is one wherein a unit electric charge emits unit electric flux (instead of 4π units of electric flux) and a unit magnetic pole emits unit magnetic flux. Two methods of achieving this end exist; one changes the size of the units, the other injects the constant 4π into the values of the space constants ϵ_0 and μ_0 (see Table 2 for meaning of symbols). The latter method is sometimes termed SUBRATIONALIZATION.

The following are the systems of electrical units most commonly used.

Electromagnetic (CGSM) system of units (see Table 2) is an absolute, consistent, unrationalized system based on the centimeter, gram, second, and space permeability ($\mu_0 = 1$) as fundamental units. A rationalized form is sometimes used in physics literature. These units were developing in the days when low-voltage, heavy-current phenomena were the center of interest; consequently the units are now of inconvenient magnitude. The unrationalized CGSM system will be used throughout this section.

Electrostatic (CGSS) system of units (Table 2) is absolute, consistent, and unrationalized. It uses the centimeter, gram, second, and space permittivity ($\epsilon_0 = 1$) as fundamental units.

Heaviside-Lorentz (HLU) system of units is an absolute, consistent, rationalized system based on the centimeter, gram, and second. In this system both space permeability and permittivity are taken as unity. This scheme greatly simplifies the fundamental relations; more important, it exhibits the symmetry existing between electric quantities on the one hand and magnetic quantities on the other, *e.g.*, in CGSM,

$$D = E/4\pi c^2 + P = \epsilon E/4\pi c^2 \quad \text{and} \quad B = H + 4\pi I = \mu H$$

while in HLU

$$D = E + P = \epsilon E \quad \text{and} \quad B = H + I = \mu \mathrm{H}$$

This system is primarily used in basic physics; it is also used in engineering literature dealing directly with Maxwell's field equations.

Giorgi (MKS) system of units is an absolute, consistent system based on the meter, kilogram, and second. It was adopted by the International Committee of Weights and Measures, of which this country is a member, in October 1935. No choice was made as to the fourth fundamental unit, preferences being divided between the ampere, ohm, permeability, and coulomb. Similarly, no decision was reached as to rationalization. The rationalized system using Q as the fourth fundamental unit is given in Table 2. This system possesses the symmetry advantages of rationalization and the advantage of utility since it includes all the practical units (see below).

Practical system is an incomplete system of units of magnitude convenient for measurements. Originally these units were designed to be decimal multiples or fractions of the CGSM units. Fortunately, although the units differ somewhat from the International units, the differences are so small as to be negligible for most practical purposes.

International system of units is based on standards set up in accord with the definitions and specifications adopted by the International Electrical Congresses of 1893, 1908, and 1910. The most recent determinations of these units are given in Table 2.

Pole strength is measured in poles. The more common measure, the INTENSITY OF MAGNETIZATION I, gives the distribution of pole strength per unit area, *i.e.*, poles per square centimeter (GAUSS). The more precise definition of I is based on the physical realities of magnetism rather than on the abstractions. Poles cannot be isolated; the finest subdivision of a magnet yields a magnetic particle possessing two equal and opposite poles separated by a distance l. The product of pole strength and the distance between poles is called the MAGNETIC MOMENT M and is measured in pole-centimeters. More precisely, therefore, the intensity of magnetization is defined as the magnetic moment per unit volume. Although this definition gives a unit of I having the dimensions of poles per sq. cm., it makes I a directed or vector quantity. The force F exerted by magnetic pole m_1 upon another m_2 is $m_1 m_2/\mu r^2$, where μ is a constant depending on the intervening medium and r is the directed distance in centimeters between the poles. In free space, $\mu = 1$; hence $F = m_1 m_2/r^2$. A positive force indicates repulsion and a negative force attraction, since like poles repel and unlike attract. The force H (MAGNETIC FIELD INTENSITY) exerted by a magnetic pole m upon a unit north pole in free space is m/r^2.

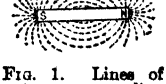

FIG. 1. Lines of force surrounding a bar magnet.

Magnetic field (or force) of a magnet is the surrounding space through which its influence extends. The magnetic field is mapped by lines of force (see Fig. 1) obtained as follows: A unit positive pole is placed in the magnetic field, the direction of the magnetic force exerted on it is determined, and the unit pole is moved an infinitesimal distance in this direction. By repetition of this process at each new position of the unit pole a line of force is traced; the sense of the line is denoted by an arrowhead pointed in the direction of the field intensity. Although through every point of the field there passes one and only one line of force, the desire to associate the magnitude of the field intensity as well as its direction with the mapped field led early investigators to assume that one line of force

Table 2. Systems of electrical units

Quantity	Symbol	Electromagnetic		Electrostatic			Giorgi			International	
		Name	Dimensional equation	Name	Dimensional equation	Factor (x)	Name	Dimensional equation (w)	Factor (x)	Name	Factor (y)
Length	l (p)	Centimeter	L	Centimeter	L	1	Meter	L	10^2	Meter	1
Mass	M	Gram	M	Gram	M	1	Kilogram	M	10^3	Kilogram	1
Time	t	Second	T	Second	T	1	Second	T	1	Second	1
Force	F	Dyne	MLT^{-2}	Dyne	MLT^{-2}	1	Newton	MLT^{-2}	10^5	.....	.....
Work, energy	W	Erg	ML^2T^{-2}	Erg	ML^2T^{-2}	1	Joule (z)	ML^2T^{-2}	10^7	Joule	1.00024
Power	P	Erg/sec.	ML^2T^{-3}	Erg/sec.	ML^2T^{-3}	1	Watt (z)	ML^2T^{-3}	10^7	Watt	1.00024
Charge (a)	Q	Abcoulomb	$M^{1/2}L^{1/2}\mu^{-1/2}$	Statcoulomb	$M^{1/2}L^{3/2}T^{-1}\epsilon^{1/2}$	c^{-1} (aa)	Coulomb (z)	Q	10^{-1}	Coulomb	0.99968
Current	I	Abampere	$M^{1/2}L^{1/2}T^{-1}\mu^{-1/2}$	Statampere	$M^{1/2}L^{3/2}T^{-2}\epsilon^{1/2}$	c^{-1}	Ampere (z)	$T^{-1}Q$	10^{-1}	Ampere	0.99968
Electric potential (b)	V	Abvolt	$M^{1/2}L^{3/2}T^{-2}\mu^{1/2}$	Statvolt	$M^{1/2}L^{1/2}T^{-1}\epsilon^{-1/2}$	c	Volt (z)	$ML^2T^{-2}Q^{-1}$	10^8	Volt	1.00036
Electric field intensity (c)	E	Abvolt/cm.	$M^{1/2}L^{1/2}T^{-2}\mu^{1/2}$	Statvolt/cm.	$M^{1/2}L^{-1/2}T^{-1}\epsilon^{-1/2}$	c	Volt/meter	$MLT^{-2}Q^{-1}$	10^6	.....	.....
Electric flux density (d)	D	Abcoulomb/cm.^{2}	$M^{1/2}L^{-3/2}\mu^{-1/2}$	Statcoulomb/cm.^{2}	$M^{1/2}L^{-1/2}T^{-1}\epsilon^{1/2}$	c^{-1}	Coulomb/m.^{2}	$L^{-2}Q$	10^{-5}	.....	.....
Electric flux	ψ	Abcoulomb	$M^{1/2}L^{1/2}\mu^{-1/2}$	Statcoulomb	$M^{1/2}L^{3/2}T^{-1}\epsilon^{1/2}$	c^{-1}	Coulomb	Q	10^{-1}	.....	.....
Permittivity (e)	ϵ_0	Abfarad/cm.	$L^{-2}T^2\mu^{-1}$	Statfarad/cm.	ϵ	c^{-2}	Farad/meter	$M^{-1}L^{-3}T^2Q^2$	$10^7/4\pi$	.....	.....
Specific inductive capacity (f)	κ_e	.....	(ab)	.....	(ab)	.....	.....	(ab)	.....	.....	.....
Electric moment (g)	p	Abcoulomb-cm.	$M^{1/2}L^{3/2}\mu^{-1/2}$	Statcoulomb-cm.	$M^{1/2}L^{5/2}T^{-1}\epsilon^{1/2}$	c^{-1}	Coulomb-meter	LQ	10	.....	.....
Electric polarisation (h)	P	Abcoulomb/cm.^{2}	$M^{1/2}L^{-3/2}\mu^{-1/2}$	Statcoulomb/cm.^{2}	$M^{1/2}L^{-1/2}T^{-1}\epsilon^{1/2}$	c^{-1}	Coulomb/m.^{2}	$L^{-2}Q$	10^{-5}	.....	.....
Resistance	R_e	Abohm	$LT^{-1}\mu$	Statohm	$L^{-1}T\epsilon^{-1}$	c^2	Ohm (z)	$ML^2T^{-1}Q^{-2}$	10^9	Ohm	1.00048
Capacitance (l)	C	Abfarad	$L^{-1}T^2\mu^{-1}$	Statfarad	$L\epsilon$	c^{-2}	Farad (z)	$M^{-1}L^{-2}T^2Q^2$	10^{-9}	Farad	0.99952
Magnetic pole (f)	m	Pole (q)	$M^{1/2}L^{3/2}T^{-1}\mu^{1/2}$	.....	$M^{1/2}L^{1/2}\epsilon^{-1/2}$	c	Weber	$ML^2T^{-1}Q^{-1}$	$10^8/4\pi$	.....	.....
Magnetic potential (k)	A	Gilbert	$M^{1/2}L^{1/2}T^{-1}\mu^{-1/2}$	.....	$M^{1/2}L^{3/2}T^{-2}\epsilon^{1/2}$	c^{-1}	Ampere-turn (u)	$T^{-1}Q$	$4\pi\times10^{-1}$	.....	.....
Magnetic field intensity (l)	H	Oersted (r)	$M^{1/2}L^{-1/2}T^{-1}\mu^{-1/2}$	.....	$M^{1/2}L^{1/2}T^{-2}\epsilon^{1/2}$	c^{-1}	Amp.-turn/m.(v)	$L^{-1}T^{-1}Q$	$4\pi\times10^{-3}$	.....	.....
Magnetic flux density (m)	B	Gauss (s)	$M^{1/2}L^{-1/2}T^{-1}\mu^{1/2}$	.....	$M^{1/2}L^{-3/2}\epsilon^{-1/2}$	c	Weber/meter^2	$MT^{-1}Q^{-1}$	10^4	.....	.....
Magnetic flux	ϕ	Maxwell	$M^{1/2}L^{3/2}T^{-1}\mu^{1/2}$	.....	$M^{1/2}L^{1/2}\epsilon^{-1/2}$	c	Weber	$ML^2T^{-1}Q^{-1}$	10^8	.....	.....
Permeability	μ_0	Gauss/oersted (t)	μ	.....	$L^{-2}T^2\epsilon^{-1}$	c^2	Henry/meter	MLQ^{-2}	$4\pi\times10^{-7}$	.....	.....
Relative permeability (n)	κ_m	.....	(ab)	.....	(ab)	.....	.....	(ab)	.....	.....	.....
Magnetic moment	M	Pole-cm.	$M^{1/2}L^{5/2}T^{-1}\mu^{1/2}$	.....	$M^{1/2}L^{3/2}\epsilon^{-1/2}$	c	Weber-meter	$ML^3T^{-1}Q^{-1}$	$10^{10}/4\pi$	.....	.....
Magnetisation (o)	I	Gauss	$M^{1/2}L^{-1/2}T^{-1}\mu^{1/2}$	.....	$M^{1/2}L^{-3/2}\epsilon^{-1/2}$	c	Weber/meter^2	$MT^{-1}Q^{-1}$	$10^4/4\pi$	.....	.....
Reluctance	R_m	Gilbert/maxwell	$L^{-1}\mu^{-1}$	.....	$LT^{-2}\epsilon$	c^{-2}	Amp.-turn/weber	$M^{-1}L^{-2}Q^2$	$4\pi\times10^{-9}$	.....	.....
Inductance	L	Abhenry	$L\mu$	Stathenry	$L^{-1}T^2\epsilon^{-1}$	c^2	Henry (z)	ML^2Q^{-2}	10^9	Henry	1.00048

Notes for Table 2:

a Or electric charge or quantity.
b And electromotive force, or potential difference.
c Or electric field strength, electric intensity, or potential gradient.
d Or electric displacement, electric induction.
e Or dielectric constant, or inductive capacity.
f Or dielectric coefficient; $\kappa_e = \epsilon/\epsilon_0$ (where ϵ = permittivity of the medium).
g Or dipole moment.
h Or intensity of polarization, density of electric moment.
i Or capacity.
j Or pole strength.
k And magnetomotive force.
l Or magnetic field strength, magnetic intensity, magnetic force.
m Or magnetizing force, magnetic induction.
n $\kappa_m = \mu/\mu_0$, where μ is permeability of the medium.
o Or intensity of magnetization, density of magnetic moment, or magnetic polarization.
p Bold face italic symbols denote vectors; the corresponding scalar magnitudes are denoted by the ordinary italic symbol.
q Or maxwell/4π.
r Adopted in 1930 by International Electrochemical Commission, oersted sometimes used for unit of reluctance, alternative name gilbert/cm.
s Also maxwell/cm.^{2}.
t Or abhenry/cm.
u Or pragilbert, most often used for unit of unrationalized MKS system.
v Or praoersted, usually used for unit of unrationalized MKS system.
w *Q* is chosen as the fourth fundamental unit.
x Ratio of size of unit to size of CGSM unit; to obtain equivalent number of CGSM units multiply by *F*, *e.g.*, 10 amperes = $10F$ abamperes = 1 abampere.
y Ratio of size of international unit to practical unit.
z Practical units incorporated in MKS system.
aa $c = (2.99796 \pm 0.00004) \times 10^{10} \doteq 3 \times 10^{10}$.
ab Pure number.

crosses each unit area perpendicular to the line when the field intensity is unity. In the CGSM system, one line of force would cross one square centimeter of surface when the field intensity is one oersted. A magnetic field is said to be UNIFORM or HOMOGENEOUS when the lines of force are parallel and equally spaced; otherwise it is NONUNIFORM or INHOMOGENEOUS. More precisely, a field is uniform when the rate of change of the field intensity with position, in any direction, vanishes; in some instances the field may be uniform in one direction but nonuniform in another, *e.g.*, the wedge-shaped pole piece of a Wetherill separator (Fig. 34) gives rise to a uniform field parallel to the width of the pole piece and a nonuniform field in all other directions.

Magnetic potential, *A*, at a point of the magnetic field is the work required to bring a unit positive pole from outside the field up to the point in question, *i.e.*, it is the potential energy of a unit pole placed at the point. The magnetic potential depends only upon the position at which it is to be evaluated and not upon the path followed by the unit pole, in contradistinction to the magnetomotive force (see p. 09) which depends upon the path.

Electromagnetic field is produced by any moving, electrically charged body; the magnetic field is transient, *i.e.*, the direction and magnitude of the force exerted on a unit pole vary with time. A steady stream of moving charges, *e.g.*, a current (of electrons) carried by a long straight conductor gives rise to a stationary magnetic field (see Fig. 2)

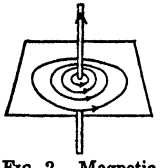

FIG. 2. Magnetic field of a linear current.

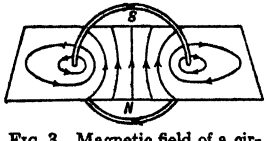

FIG. 3. Magnetic field of a circular current.

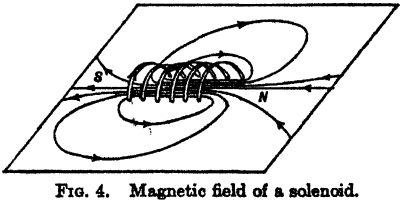

FIG. 4. Magnetic field of a solenoid.

whose lines of force are concentric circles. The sense of the lines of force of the electromagnetic field bears a definite relation to the direction of the moving charges; it is that of the rotation of a right-handed screw advancing in the direction of motion of the charges. The lines of force of a ring-shaped conductor (Fig. 3) are the "circles" of two linear conductors, displaced eccentrically toward the outside and somewhat deformed. For a cylindrical coil (SOLENOID), the lines of force are similar to those of a permanent bar magnet (*cf.* Fig. 4 with Fig. 1). By analogy with the poles of magnets, the areas of convergence

of the lines of force (the openings of the coil) are called the POLES OF THE ELECTROMAGNET, the south pole being the opening through which the lines enter and the north pole the opening through which the lines leave the coil.

Field intensity of a solenoid at any point along its axis is

$$H = 2\pi ni\ (\cos\theta_1 + \cos\theta_2) \tag{1}$$

where θ_1 and θ_2 are the angles included between the axis and the lines drawn from the point to the near and far edges of the solenoid respectively, and n is the number of turns per cm. At the center of the solenoid, Eq. 1 becomes

$$H = 4\pi ni(l/\sqrt{l^2 + 4r^2}) \tag{2}$$

where l and r are the length and radius of the solenoid expressed in centimeters. In the case of a coil whose length is large compared to its radius, Eq. 2 reduces to $H = 4\pi ni$. For a solenoid wound with n turns per centimeter in a number of layers extending from a distance r centimeters from the axis to a distance R and carrying a current of i abamperes, the field intensity in oersteds at an axial point distant l_1 and l_2 centimeters from the two ends is

$$H = \frac{2\pi ni}{R - r}\left(l_1 \ln \frac{R + \sqrt{l_1^2 + R^2}}{r + \sqrt{l_1^2 + r^2}} + l_2 \ln \frac{R + \sqrt{l_2^2 + R^2}}{r + \sqrt{l_2^2 + r^2}}\right) \tag{3}$$

when ln is the Napierian logarithm.

Induced magnetism is observed whenever matter is placed in the magnetic field of a permanent magnet or electromagnet; thus a rod of iron placed in the core of a solenoid becomes magnetized in the direction of the impressed magnetic field and magnetic poles form at the end surfaces of the rod.

Magnetic flux density, B, that is, the magnetic force at a point inside a magnetic material, is the resultant of the externally impressed magnetic field and the force due to the induced poles at the ends of the rod. If the strength of the induced magnetism is equivalent to I dipoles per cc., the number of lines due to the induced magnetism is $4\pi I$; the number due to the impressed field is H, hence the total number of lines crossing each sq. cm. is

$$B = H + 4\pi I \tag{4}$$

Magnetic flux, ϕ, is the number of lines crossing total section of rod, or

$$\phi = BS \tag{5}$$

where S = surface area of section in sq. cm.

Intensity of magnetization induced depends upon the impressed field intensity, the temperature, chemical composition, physical structure and previous magnetic history of the magnetized body, and upon the time characteristics of the magnetizing field.

Susceptibility of a magnetic medium, k, is defined as the ratio of the induced magnetization to the impressed field, *i.e.*,

$$k = I/H \quad \text{or} \quad I = kH \tag{6}$$

Susceptibility as defined by Eq. 6 is sometimes called the VOLUME SUSCEPTIBILITY to differentiate it from the SPECIFIC SUSCEPTIBILITY $\psi = k/\rho$, where ρ = density. Substances having positive susceptibilities, *i.e.*, those in which the induced field augments the impressed field, are paramagnetic; substances of negative susceptibility, for which the induced field cancels a part of the impressed field, are diamagnetic. The direction of the magnetization is parallel to the impressed field for isotropic materials (antiparallel for isotropic diamagnetic substances) and the susceptibility is a constant independent of the orientation of the body. For anisotropic materials the induced magnetization is at an angle to the impressed field and the susceptibility varies with the orientation. In general, anisotropic materials possess three magnetic axes such that fields impressed along these axes produce parallel magnetization. The susceptibilities along the magnetic axes may vary considerably; with some materials, *e.g.*, graphite, it is possible to prepare a specimen that is paramagnetic in one direction and diamagnetic in another.

Table 3 gives figures on susceptibility of minerals collected from various sources; several discrepancies were evident, and the warning given in connection with Table 1 should be remembered.

Permeability, μ, of a magnetic substance is the ratio of the magnetic flux density to the impressed field, *i.e.*,

$$\mu = B/H \quad \text{or} \quad B = \mu H \tag{7}$$

Permeability is related to susceptibility, since substitution of Eqs. 6 and 7 in Eq. 4 gives

$$\mu = 1 + 4\pi k \tag{8}$$

Hence substances of permeability greater than unity are paramagnetic; less than unity, diamagnetic. Owing to the linearity of the relation between μ and k, it follows as above that B is parallel or inclined to H according to whether the material is isotropic or anisotropic, the latter possessing three magnetic axes along which B and H are parallel.

Table 3. Magnetic susceptibilities of minerals

Mineral	Susceptibility	Mineral	Susceptibility
Magnetite	0.12–3.07 *a*	Fluorite	−0.000000285 *b*
Franklinite	0.0025–0.0037 *a*	Aragonite	−0.000000392
Ilmenite	0.0015 *a*		−0.000000444 *b, c*
Pyrrhotite	0.000337–0.00575 *a*	Calcite	−0.000000363
Siderite	0.000084, 0.000143 *b, c*		−0.000000405 *b, c*
Hematite	0.00011–0.0011 *a*	Ruby	0.00000047 *b*
Zircon	−0.000000170	Topaz	−0.00000042 *b*
	+0.000000732 *b, c*	Beryl	0.000000826
Limonite	0.0007–0.0008 *a*		0.000000386 *b*
Corundum	−0.00000034 *b*	Epidote	0.0000238
Pyrolusite	0.00062–0.0007 *a*		0.0000239 *b, c*
Manganite	0.00049 *a*	Hornblende	0.000024
Garnet	0.000375 *a*		0.000018 *b, c*
Quartz	0.000175–0.000438 *a*	Augite	0.0000266
Rutile	0.00000196, 0.00000209 *b, c*		0.0000227 *b, c*
Pyrite	0.00015–0.00002 *a*	Adularia	−0.000000427; 384; 317 *b, d*
Sphalerite	−0.000000264 *b*	Diopside	0.0000088 *b*
Dolomite	0.000001 *b*	Sapphire	0.0000057 *a*
Apatite	−0.00000264 *b*	Cobaltite	0.0000058 *a*
Willemite	0.00019 *a*	Feldspar	0.0000016 *a*
Chalcopyrite	0.00000085 *b*	Limestone	0.000006 *a*
Spinel	0.00000062 *b*	Red serpentine	0.000041 *a*
Galena	−0.000000035 *b*	Green serpentine	0.00035 *a*
Rock salt	−0.00000050 *b*	Antimony sulphide, native	−0.00000085 *a*
Celestite	−0.000000342; 314; 359 *b, d*	Mica, Bengal ruby—clear	0.000012–0.000008 *a*
Tourmaline	0.00000112 *b*	Mica, Bengal ruby—spotted	0.0147–0.000287 *a*
Graphite	−0.0000022		
	−0.0000142 *b, c*		

a Volume susceptibility. *b* Specific susceptibility. *c* For different axes. *d* Read in ciphers before significant figures after semicolons; *e.g.*, see Rutile.

Magnetization *vs.* impressed field. The ratio of magnetization and, therefore, of magnetic flux density to the magnitude of the impressed field is constant for all known diamagnetic substances at presently available field intensities, and for most paramagnetic substances. However, μ and k vary with H for ferromagnetic substances. Fig. 5 shows a typical B–H curve and the corresponding μ–H

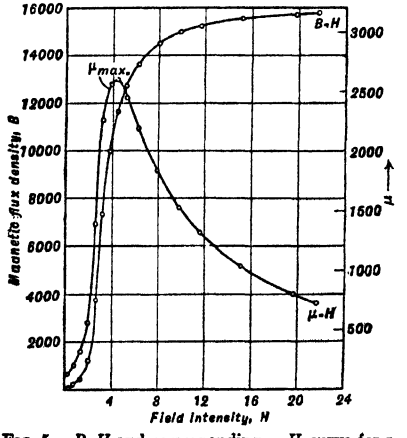

FIG. 5. B–H and corresponding μ–H curve for a ferromagnetic material (*after Ewing, 176 Phil. Trans. Roy. Soc. 523*).

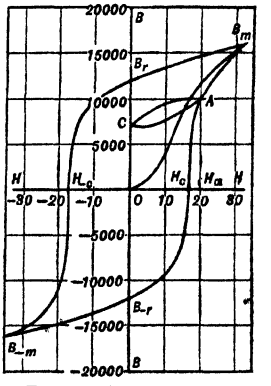

FIG. 6. Hysteresis loops.

curve for iron. The B–H curve shows a varying increase of B with an increase in H, the maximum rate of increase $\mu_{max.}$ coming at the inflection point of the curve; as H increases past the value corresponding to $\mu_{max.}$, B increases less rapidly and finally approaches a steady rate of increase; here the material is said to be MAGNETICALLY SATURATED and the flux density is designated MAXIMUM FLUX DENSITY B_m (or more precisely the SATURATION FLUX DENSITY). If, after magnetic saturation, the impressed field is decreased to zero, the B–H curve is represented by the curve B_mB_r of Fig. 6; B_r is

called the REMANENCE (remanent induction or retentivity) and is a measure of the permanent magnetism acquired by the magnetised body as a result of the magnetic treatment. With an increase of H in the reverse direction, B decreases along the curve $B_r H_{-c}$ until it finally vanishes; H_{-c} is called the COERCIVE FORCE and is equal to $4\pi I$. Materials with a high coercive force are said to be magnetically hard or rigid; with a low coercive force, magnetically soft or elastic. These descriptive terms are loosely used, and their implications are not founded on facts. For further increases of H in the negative direction, B increases negatively to a negative maximum value B_{-m}; further changes of H as indicated by Fig. 6 trace the curve $B_{-m}B_{-r}H_cB_m$, where B_{-r} (= B_r) and H_c (= H_{-c}) are the negative remanence and positive coercive force respectively. The entire cycle is known as a HYSTERESIS LOOP. If, when the point A on the H_cB_m branch is reached, H is decreased to zero and then increased to H_a, a MINOR LOOP ACA is obtained. This procedure may be repeated for any point of the major hysteresis loop, hence an infinity of minor loops may be obtained. Thus for each value of H there are an infinite number of values of B and consequently an infinite number of values of μ. Hence the value of μ for ferromagnetic substances is significant only when the previous magnetic history is known.

Dependence of permeability upon temperature is of practical importance only in the case of ferromagnetic materials. In general, the value of μ increases slowly at first and then more rapidly until

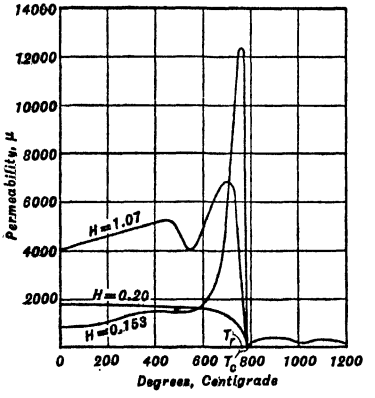

FIG. 7. Temperature variation of the permeability of iron (*after Morris, 44 Phil. Mag., Series V, 213*).

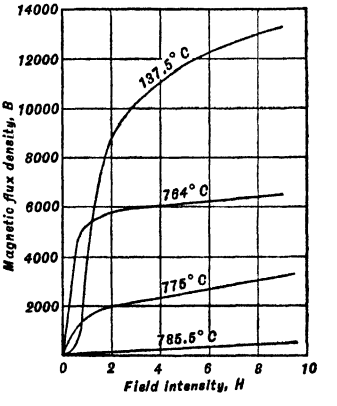

FIG. 8. B–H isotherms for iron (*after Morris, 44 Phil. Mag. Series V, 213*).

a temperature T_R (Fig. 7), known as the RECALESCENCE TEMPERATURE, is reached. Thereafter μ decreases rapidly and vanishes at the critical temperature T_c (CURIE POINT). The possibility of magnetic separation of two ferromagnetic substances by working at a temperature above the Curie point of one has been suggested (*Bul 425 USBM*). The B–H curves for iron at different temperatures (Fig. 8) show a decrease in saturation flux density with an increase in temperature and an approach to the linearity associated with paramagnetic materials ($\mu \neq f(H)$). For the diamagnetic and weakly paramagnetic materials, permeability is independent of temperature; for the stronger paramagnetics the permeability varies inversely as the absolute temperature (Curie's law).

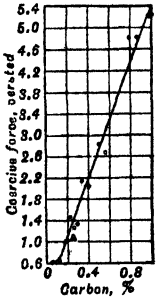

FIG. 9. Coercive force vs. carbon content (*after International Critical Tables, vol. 6, p. 379*).

Effects of physical structure and chemical composition on permeability are too varied to permit of generalization. Substances existing in more than one crystalline state invariably exhibit different permeabilities in these states. In general, the different allotropic states of a substance show different magnetic properties; thus of the four allotropic states of pure iron (α, to 800° C.; β, 800 to 920° C.; γ, 920 to 1,410° C.; δ, 1,410° C. to melting point), only the α-state is magnetic. The decrease in magnetization at saturation with increasing temperature is proportional to the percentage of α-iron. Physical changes produced by the action of mechanical, electrical, or optical forces are invariably accompanied by changes in magnetic properties. Some indication of the effect of chemical composition may be had from the B–H curves (Fig. 9) for steels of varying carbon content. The regular increase of coercive force with carbon content has been suggested as the basis for a rapid method of plant-control analyses (*24 #1 ASM 175*). The unpredictability of magnetic properties of alloys from the properties of the constituents is well known; of practical importance is the low permeability of the higher manganese-iron alloys (>5% Mn) on the one hand, and the high permeability of the alloy, 23.7% Mn with Ni, on the other.

Time characteristics of the magnetizing field intensity have a negligible effect upon the magnetization curves of some materials and a very marked effect on others. In general, magnetisation lags behind the imposed, uniformly maintained field intensity (Fig. 10). Similarly magnetisation lags behind the removal of the magnetising field (Fig. 11). This time-lag is a function of size, increasing with diameter of a solenoid iron core, and is also a function of the field intensity. On account of these

time-lags, the hysteresis cycle may vary markedly with the rate at which field intensity is varied. For fields with alternating characteristics, the maximum permeability is at first independent of frequency, then decreases rapidly as frequency is increased, finally becoming unity at frequencies above 3×10^{10} per sec. Hysteresis loops obtained with alternating magnetic fields generally show an increase in coercive force.

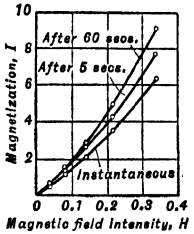

FIG. 10. Time lag of magnetization for annealed wrought iron (*after Ewing, 46 Proc. Roy. Soc. A, 269*).

Magnetic circuit is a useful fiction which conceives of a flow of hypothetical magnetic substance (FLUX) in a manner analogous to the flow of current in a conductor, the magnetic flow resulting from a difference in magnetic pressure or potential, called the MAGNETOMOTIVE FORCE (m.m.f.), by analogy with electromotive force, and resisted by the RELUCTANCE of the circuit (analogous to resistance). The relation of these quantities of the magnetic circuit is

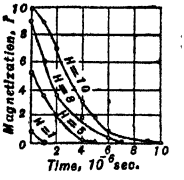

FIG. 11. Time rate of decrease of magnetization of a hard steel wire (*after Wvedensky, 66 Ann. Physik 110*).

$$\phi R_m = \text{m.m.f.} \tag{9}$$

Magnetomotive force is the work done by the magnetic field when a unit positive charge is carried around the current producing the electromagnetic field in the sense of the lines of force; it is independent of the path provided the path is closed, otherwise it is dependent thereon. In a magnetostatic field due solely to permanent magnets the m.m.f. is identical with the magnetic potential. For a toroidal solenoid with an iron core

$$\text{m.m.f.} = \oint H dl = 4\pi Ni \tag{10}$$

where l = mean length of torus and N = total number of turns. Since $\phi = BS$ (Eq. 5) and $H = B/\mu$, $H = \phi/\mu S$, whence

$$\phi \oint \frac{dl}{\mu S} = 4\pi Ni = \text{m.m.f.} \tag{11}$$

Reluctance. The circular integral of Eq. 11 is the reluctance. In the case of a magnetic circuit consisting of several distinct parts, in each of which μ and S are constant

$$\oint \frac{dl}{\mu S} = \frac{l_1}{\mu_1 S_1} + \frac{l_2}{\mu_2 S_2} + \cdots \tag{12}$$

Thus if the iron-ring core is cut by a narrow gap of width w (Fig. 12) the reluctance of the magnetic circuit becomes (taking $\mu_{\text{Air}} = 1$)

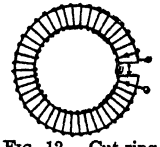

FIG. 12. Cut-ring electromagnet.

$$R_m = \frac{l - w}{\mu_{\text{Fe}} S} + \frac{w}{\mu_{\text{Air}} S} = \frac{l + w(\mu_{\text{Fe}} - 1)}{\mu_{\text{Fe}} S}$$

Thus the original flux has been decreased by a factor $l/[l + w(\mu - 1)]$. Assuming a permeability of 300 for iron, a gap as small as $l/300$ reduces the flux by one-half; which shows the tremendous effect of even small gaps in a magnetic circuit. In the case of an electromagnet with a keeper so located in the magnetic circuit (Fig. 13) as to form two air gaps, the reluctance is

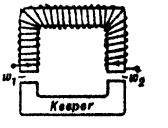

FIG. 13. U-magnet with keeper.

$$R_m = \frac{l - (w_1 + w_2)}{\mu_{\text{Fe}} S} + \frac{w_1}{S} + \frac{w_2}{S} = \frac{l + (w_1 + w_2)(\mu_{\text{Fe}} - 1)}{\mu_{\text{Fe}} S} \tag{13}$$

Inductance. When the magnetic flux in a substance is changing, a current is induced therein which lasts as long as change continues. The magnitude of the induced e.m.f. is proportional to the time rate of change of flux. If the flux is decreasing, the sense of the induced current is that of the rotation of a right-handed screw advancing in the direction of the flux, whereas if the flux is increasing, the induced current is in the opposite sense. In either case the induced e.m.f. acts in the sense to oppose the change in flux. If the changing magnetic flux is due to changes in current flowing in a conductor, a counter e.m.f. is induced in the circuit. This phenomenon is known as SELF-INDUCTION, and the ratio of flux to current is the self-inductance $L = \phi/i$.

Energy stored in a magnetic field is the energy expended in producing the flux against the counter e.m.f. induced by the changing flux. This is

$$W = \int \text{e.m.f.} \times i dt \tag{14}$$

where e.m.f. = induced counter e.m.f. in abvolts. For a coil of n turns the time rate of change of total flux is $d(N\phi)/dt$ = e.m.f. where ϕ is the flux linked per turn. Eq. 14 becomes

$$W = \int_0^{\phi} iN d\phi = iN\phi = NLi = Li^2 \tag{15}$$

where L and L_t are the inductances of the coil and each winding respectively. If the magnetic circuit includes iron (*e.g.*, iron core in an electromagnet), Eq. 15 becomes

$$W = \int \frac{d(BSN)}{dt} i dt = SNi \int_0^B dB$$

But $H = 4\pi ni$ (p. 06) $= 4\pi Ni/l$, whence

$$W = \frac{1}{4\pi} \int_0^B HlSdB \text{ ergs} = \frac{1}{4\pi} \int_0^B HdB \text{ erg/cc. of iron} \tag{16}$$

This integration cannot be performed unless the hysteresis loop relating B to H is known. In the case of a nonmagnetic medium, $\mu = 1$; hence $B = H$ and Eq. 16 becomes

$$W = \frac{1}{8\pi} B^2 = \frac{1}{8\pi} BH = \frac{1}{8\pi} H^2 \tag{17}$$

The energy stored in an air gap w cm. wide between two pole faces S sq. cm. in area is

$$W = \frac{1}{8\pi} BHSw \tag{18}$$

Since Hw is the work done in carrying a unit positive pole from one pole face to the other, $Hw = A$ (magnetic potential) and $BS = \phi$ (assumed uniform over gap), the energy of the air gap may be written as $W = (1/8\pi)\phi A$ ergs.

The energy loss due to hysteresis is, from Eq. 16, $1/4\pi$ times the area of the hysteresis loop, the latter being determined by graphical integration of the loop. In addition to the power loss represented, the conversion of the hysteresis loss into heat, with subsequent reduction in maximum flux densities with rising temperature (see p. 08), is a problem of prime importance in the design of alternating magnets. For maximum flux densities, B_m between 2,000 and 12,000 lines per sq. cm., the empirical equation, $W = \eta B_m^c$ ergs per cc. per cycle, may be used, where η (HYSTERESIS COEFFICIENT or constant) and c are constants of the material. Another empirical equation giving results which are somewhat too high at B_m less than 10,000 and too low at greater values of B_m, is $W = (1/\pi)\eta B_m H_c$ ergs per cc. per cycle.

3. PRINCIPLES OF MAGNETIC SEPARATION

Magnetic forces acting on a body in a magnetic field may be determined by application of Coulomb's law, *i.e.*, $F = m_1 m_2/\mu r^2$. However, if the body in question is not a point pole or a small magnetic dipole, and is not located at distances from the magnets of the field sufficiently great relative to its linear dimensions that it may be so considered, the summations or integrations resulting from application of Coulomb's law are extremely complicated and often impossible. A more fruitful and less difficult method of obtaining the force exerted depends upon the fact that the energy stored in the magnetic field is energy of position, *i.e.*, potential energy, and is, therefore, available to do external work.

If, in any magnetic system composed of permanent and/or induced magnets, a particular body is moved an infinitesimal distance dl, the magnetic energy changes by an infinitesimal amount dW from the energy W_1 of the initial state to the energy W_2 of the final state. The work done in moving the body against the force F acting on it is $Fdl = -dW$, whence the force acting on the body is

$$F = -\frac{dW}{dl} \tag{19}$$

Thus in the case of two magnetized iron surfaces of area S separated by a gap w, the energy stored in the gap is given by Eq. 18. The rate of change of this energy in the direction of w and therefore the pull in dynes is $B^2S/8\pi$. Similarly for a rotation, the torque T is given by Eq. 20.

$$T = -\frac{dW}{d\theta} \tag{20}$$

For the magnetic system specified, the X-component F_x of the force per unit volume is given completely by

$$F_x = -\rho_m \frac{\partial A}{\partial x} - \frac{H^2}{8\pi} \frac{\partial \mu}{\partial x} + \frac{\partial}{\partial x}\left(\frac{H^2}{8\pi} \rho \frac{\partial \mu}{\partial \rho}\right) \tag{21}$$

where ρ_m is the density of magnetic poles and ρ is the mass density. The first term is the force due to the permanent magnetism of the body, whereas the others arise from the induced magnetism. The second term is of importance in dealing with bodies wherein the permeability varies with position within the body. The third term accounts for potential energy stored within the magnetized body as a result of a change in shape of the body (usually a lengthening or shortening in the direction of the magnetization known as MAG-

NETOSTRICTION). The force arising from this internally stored energy depends upon the space rates of change of the field intensity, the permeability, and the mass density. In the problems of interest in this section it is assumed that $\mu - 1 = c\rho$, where c is a constant, and that $\partial\mu/\partial x = 0$. Although neither of these assumptions is correct, the errors introduced by their use are relatively small. Eq. 21 may now be written

$$F_x = -\rho_m \frac{\partial A}{\partial x} + \frac{\mu - 1}{4\pi} H \frac{\partial H}{\partial x} \tag{22}$$

Example. The force exerted by one magnetic particle upon another requires the preliminary evaluation of the potential which was given by Maxwell (II *Electricity and Magnetism 11*) as

$$A = \frac{M_1 M_2}{r^3} (\cos\phi - 3\cos\theta_1 \cos\theta_2) \tag{23}$$

where M_1 and M_2 are the magnetic moments of the particles, r is the distance between their centers, ϕ is the angle which the axes of the particles make with each other, and θ_1 and θ_2 are the angles which the axes make with r. Although the variables r, ϕ, and θ are sufficient to specify completely the relative disposition of the particles, ϕ is a dependent variable. This difficulty is removed by expressing Eq. 23 in spherical polar co-ordinates using r as the polar direction, θ as latitude, and ψ as azimuth, when Eq. 23 becomes

$$A = \frac{M_1 M_2}{r^3} [\sin\theta_1 \sin\theta_2 \cos(\psi_1 - \psi_2) - 2\cos\theta_1 \cos\theta_2] \tag{24}$$

Differentiating Eq. 24, the force acting on the second magnetic particle along the line of centers is given by Eq. 25

$$F_r = -\frac{\partial A}{\partial r} = -\frac{3M_1 M_2}{r^4} [\sin\theta_1 \sin\theta_2 \cos(\psi_1 - \psi_2) - 2\cos\theta_1 \cos\theta_2] \tag{25}$$

When the magnets have their axes in a straight line and in the same direction, $\theta_1 = \theta_2 = 0$, $\psi_1 = \psi_2$, and an attractive force $6M_1M_2/r^4$ is exerted. When the axes are perpendicular to the line of centers and parallel in the same direction, $\theta_1 = \theta_2 = \pi/2$, $\psi_1 = \psi_2$, and a repulsive force $-3M_1M_2/r^4$ acts. If the axes are parallel in opposite directions, $\psi_1 = \pi + \psi_2$, and the force is an attractive force of the same magnitude.

The couple tending to increase, say, the angle ψ_1 is found by applying Eq. 20 to Eq. 24, giving

$$T = -\frac{\partial A}{\partial \psi_1} = \frac{M_1 M_2}{r^3} \sin\theta_1 \sin\theta_2 \sin(\psi_1 - \psi_2) \tag{26}$$

When the axes are perpendicular to the line of centers and to each other, $\theta_1 = \theta_2 = \pi/2$ and $\psi_1 = \psi_2 + \pi/2$. The couple is M_1M_2/r^3.

The force exerted on a sphere, say, of soft iron possessing no permanent magnetism is given by

$$F_x = \frac{\mu - 1}{24} D^3 H \frac{\partial H}{\partial x} \tag{27}$$

Tractive force exists only when the space rate of change of the field intensity does not vanish, *i.e.*, when the field is nonuniform; it has components only in the directions of inhomogeneity and is positively oriented in the direction of maximum inhomogeneity providing $\mu > 1$. For diamagnetics, $\mu < 1$, the direction of the tractive force is that of decreasing inhomogeneity of field, *i.e.*, diamagnetic spheres move toward the more uniform part of the field. Looked at from the point of view of lines of force, a paramagnetic spherical body placed in a uniform field (Fig. 14, item *a*) concentrates the lines of force over the hemispherical surfaces facing the poles. Lines of force may be considered as being in tension; hence each half of the particle is subject to a pull whose magnitude depends upon the orientation and number of lines, and, since this is the same for the two halves, the resultant force vanishes; however, in the case of a paramagnetic particle in an inhomogeneous field (Fig. 14, item *b*), although the number of lines crossing each half of the particle is the same, the orientation is such that the particle is pulled toward the focus of inhomogeneity. If the particle possesses any permanent magnetism and is presented to the field in such fashion that its axis is not collinear with the lines of force, it is also acted on by a couple which turns the particle until its axis parallels the field; if the particle was originally nonmagnetic the axis of the induced polarity is parallel to the field. In the case of a diamagnetic sphere the lines of force are dispersed (Fig. 14, item *c*); the axis of the induced polarity is parallel to the field and the couple acting tends to align the axis therewith. However, if a diamagnetic needle is placed in a field it aligns itself with its axis perpendicular to the field when the dimensions of the needle are comparable to those of the magnet, and with its axis parallel to the field when these dimensions are small.

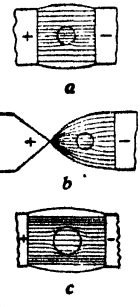

FIG. 14. Effect of permeable bodies on magnetic fields.

Faraday (*Experimental Researches*, § *2418*) observed this behavior of long diamagnetic needles and correctly interpreted it as the result of the tendency of the induced poles to move toward the region of greater uniformity; his published reports on this subject have been rather generally misread and misinterpreted down to the present.

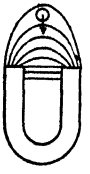

FIG. 15. Motion of a paramagnetic sphere in the field of a horseshoe magnet.

The direction of the motion produced by the magnetic force, as noted above, is that of maximum rate of change of field intensity, and in general does not coincide with the direction of the lines of force. Thus if a sphere of soft iron is placed symmetrically with respect to the two poles of a U-magnet (Fig. 15) and at some distance therefrom, the maximum rate of change of intensity is in the direction perpendicular to the lines of the poles, hence the particle moves in this direction toward the poles generally, but not directly toward either.

Direction of motion, other things being constant, is determined by the sign of $\mu - 1$ as noted above; this should be written more correctly as $\mu_{\text{solid}} - \mu_{\text{medium}}$, from which it follows that a paramagnetic particle can be made to move in the direction of increasing uniformity of field by surrounding it with a more paramagnetic medium. This principle may be utilized to separate a mixture of paramagnetic particles whose permeabilities are very close, by placing the mixture in a medium of intermediate permeability.

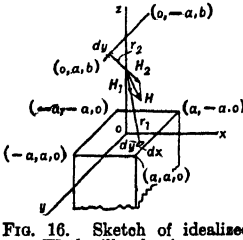

FIG. 16. Sketch of idealized Wetherill pole pieces.

Example: In order to apply Eq. 27, it is necessary to have the equation relating H to position, and this is the chief problem in application. To illustrate the method, an idealization of the Wetherill pole-pieces (Fig. 16) is used. The wedge-pole magnet is assumed to be a line magnet of length $2a$ with positive poles distributed at the rate of $2am$ per unit length. The flat-pole magnet is assumed to be a square $2a$ units on a side with a surface distribution of negative poles of $-m$ per unit area. The contribution H_2 of the line magnet to the resultant field intensity H at a point $P(0,0,z_0)$ is given by Eq. 28, where $r_2 = [y^2 + (z_0 - b)^2]^{\frac{1}{2}}$

$$H_2 = 2am\int_{-a}^{a} \frac{1}{r_2^2}\,dy \tag{28}$$

From symmetry considerations the x- and y-components vanish, the z-component H_{2z} is given by

$$H_{2z} = 2am\int_{-a}^{a} \frac{(z_0 - b)}{r_2^3}\,dy = \frac{4ma^2}{(z_0 - b)[a^2 + (z_0 - b)^2]^{\frac{1}{2}}} \tag{29}$$

The contribution H_1 of the square-pole magnet at P is given by Eq. 30, where $r_1 = (x^2 + y^2 + z_0^2)^{\frac{1}{2}}$

$$H_1 = -m\int_{-a}^{a}\int_{-a}^{a} \frac{dx\,dy}{r_1^2} \tag{30}$$

The x- and y-components vanish, the z-component H_{1z} is given by

$$H_{1z} = -m\int_{-a}^{a}\int_{-a}^{a} \frac{z_0 dx dy}{r_1^3} = \frac{8mz_0}{\sqrt{2(a^2 + z_0^2)}} - 2\pi m \tag{31}$$

The resultant field intensity of the magnet combination at the point P is

$$H_z = \frac{4ma^2}{(z_0 - b)[a^2 + (z_0 - b)^2]^{\frac{1}{2}}} + \frac{8mz_0}{\sqrt{2(a^2 + z_0^2)}} - 2\pi m \tag{32}$$

and the rate of change of H_z along the z-axis is

$$\frac{dH_z}{dz_0} = \frac{4ma^2[a^2 + 2(z_0 - b)^2]}{(z_0 - b)^2[a^2 + (z_0 - b)^2]^{\frac{3}{2}}} - \frac{16ma^2}{[2(a^2 + z_0^2)]^{\frac{3}{2}}} \tag{33}$$

Assuming a square-pole magnet 6 in. on a side, a wedge-pole magnet 6 in. long, a gap of $\frac{3}{4}$ in., and a value of 40 for m (calculated to give a field intensity of 1,000 oersteds at the point in question), the space rate of change of the intensity at a point $\frac{1}{8}$ in. above the square pole is 472 oersteds per cm. If a 10~14-m. magnetite particle is placed at this point, it is acted on with a magnetic force of 55 dynes or 0.055 gm., the gravitational pull on it being 0.0088 gm., assuming a density of 6.0. A 150~200-m. magnetite particle similarly located is magnetically attracted with a force of 1.4×10^{-5} gm., the gravitational force being 0.22×10^{-5} gm. If the gap is shortened to $\frac{1}{2}$ in. and the field intensity at the point $\frac{1}{8}$ in. above the lower pole is still assumed to be 1,000 oersteds, the magnetic pull on the 10~14-m. particle is now 0.103 gm. On the other hand, if a value of $m = 40$ is assumed when the gap is $\frac{1}{2}$ in., the pull on the 10~14-m. particle is 0.234 gm.

The dependability of the above results, considering the number and nature of the assumptions made, is not great; however, it is believed that they show the order of the magnitudes involved. A com-

parison of the forces at constant field intensity, 0.055 and 0.103 gm., acting on the 10~14-m. particle, when the gaps are 3/4 and 1/2 in. respectively, shows the tractive effect of increased inhomogeneity of field. In general, a decrease in gap is accompanied by an increase of field intensity as well as inhomogeneity; the increased pull of 0.234 gm. when $m = 40$ and gap = 1/2 in. is due to both factors. It should be noted that ratio of the magnetic forces acting on two particles of different diameters, similarly located in the field, is equal to the third power of the ratio of the diameters and that the ratio of magnetic to gravitational force is independent of particle size.

Magnetic Forces in a Separator

Magnetic concentration is based upon the differences in paths followed by particles of different permeabilities in passing through a magnetic field under the simultaneous action of magnetic and other forces. Determination of the paths is essentially a problem in dynamics, requiring for its solution complete specification of the ore grains, *i.e.*, location, size, shape, density, permeability and initial velocity, and a knowledge of the magnetic and other forces as functions of position and time. Assuming ability to specify the problem, the mathematical difficulties of obtaining a solution are almost insurmountable. However, by stripping the problem of those factors related to the mutual interaction of particles it is possible to obtain an idealized problem more susceptible to attack, the solution of which exposes the interplay between the factors determining the differences in paths. Thereafter by removing the idealizing conditions one by one and modifying the solution accordingly, it is possible to obtain a useful picture of the actual process. In the following example, this method is applied to the Wetherill separator; it is equally applicable, with less difficulty, to drum, pulley, and belt-type separators, and, with greater difficulty, to wet magnetic concentrators.

Particle paths in a Wetherill separator. A single spherical grain of magnetic substance moving with the uniform velocity v of the feed belt of a Wetherill separator (Fig. 34) is acted upon by a balanced system of forces until it comes within the effective range (wherein magnetic exceeds gravitational force) of the magnetic field. Here it is subject to the resultant of the following forces: (*1*) a magnetic force, $\frac{\mu - 1}{24} D^3 H \frac{\partial H}{\partial z}$ varying in direction and magnitude with position; (*2*) a constant gravitational force $\frac{\pi}{6} D^3 \rho g$; (*3*) a negligible, transient, frictional force which acts only at the time the grain leaves the belt, provided the relative motion has a component parallel to the belt. The path of the grain is completely determined by these forces and the velocity v. The force equation along the co-ordinate axes is given by (see Fig. 16, belt is parallel to x-axis)

$$(a) \qquad \frac{\pi}{6} D^3 \rho \frac{d^2 z}{dt^2} = \frac{\mu - 1}{24} D^3 H \frac{\partial H}{\partial z} - \frac{\pi}{6} D^3 \rho g = F_z$$

$$(b) \qquad \frac{\pi}{6} D^3 \rho \frac{d^2 x}{dt^2} = \frac{\mu - 1}{24} D^3 H \frac{\partial H}{\partial x} = F_x \qquad (34)$$

$$(c) \qquad \frac{\pi}{6} D^3 \rho \frac{d^2 y}{dt^2} = \frac{\mu - 1}{24} D^3 H \frac{\partial H}{\partial y} = F_y$$

Solution of Eqs. 34 requires a knowledge of H as a function of the co-ordinates; information is generally lacking and difficult to obtain. Nevertheless, it is possible to discuss the form of the solution qualitatively with the aid of certain plausible assumptions. If the particle is symmetrically disposed relative to the length of the collecting pole-piece, F_y may be set equal to zero and Eq. 34(*c*) is solved by $y = 0$. F_x, on the other hand, does not vanish; it represents a force of varying magnitude (Fig. 17) whose direction is parallel or antiparallel to the direction of motion of the feed belt when the grain is located to the left or right of the y-axis, taking RR' as the effective magnetic range. The magnitude of F_x depends upon the field intensity, the inhomogeneity of the field in the X-direction, the permeability, and upon the diameter of the particle. In the event that $F_x = 0$, Eq. 34(*b*) is solved by $x = vt +$ constant, *i.e.*, the projection of the trajectory of the particle in the XY-plane is that of a particle moving in the direction of x with constant velocity v (Fig. 18, curve *A*). The effect of F_x upon this horizontal motion is an acceleration when the particle is located to the left of the Y-axis, and a deceleration when located to the right (Fig. 18, curve *B*). When the initial velocity v is great, the effect of F_x upon the horizontal motion is almost negligible (Fig. 18, curve *C*). The solution of Eq. 34(*a*), giving the projection of the motion in the XZ-plane, is obtained in finite terms only when $H \frac{\partial H}{\partial z}$ is given in extremely simple form; otherwise the solution is given by a convergent infinite series, or by a series of successive approximations. If it is assumed that $H \frac{\partial H}{\partial z} = C$ (constant), Eq. 34(*a*)

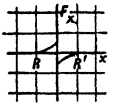

FIG. 17. Variation of the horizontal component of the magnetic force.

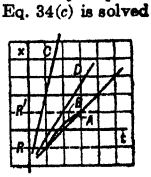

FIG. 18. Projection of particle trajectory in xy-plane.

is solved by $z = \frac{1}{2}\left[\frac{(\mu-1)C}{4\pi\rho} - g\right]t^2$, *i.e.*, the motion is that of a particle uniformly accelerated (Fig. 19, Curve *A*). The assumption of a constant F_z is not valid for the fields used in magnetic separators, the Frantz Isodynamic separator (Sec. 19, Art. 22) being the sole exception; in general the product of field strength and inhomogeneity increases as z increases. The effect is to dip the z-t curves more and more toward the Z-axis (Fig. 19, curves *B*, *C*, *D*). The magnitude of this effect may be gaged by comparing solutions obtained by assuming that $H\frac{\partial H}{\partial z}$ varies linearly with z, in which case a solution of the form $z = at^2 + bt^4 + ct^6 + \cdots$ is obtained; and that $H\frac{\partial H}{\partial z}$ varies as z^2, in which case the form of the solution is $z = at^2 + bt^6 + ct^{10} + \cdots$. The shape of the z-t curves also depends on the permeability of the particle, being more steeply inclined as μ increases.

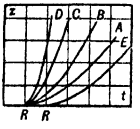

FIG. 19. Projection of particle trajectory in xz-plane.

The trajectory of the particle is obtained analytically by eliminating t between the solutions of Eqs. 34(*a*) and (*b*), and graphically by plotting z *versus* x for equal values of t from the curves of Figs. 18 and 19. The resulting curves are shown in Fig. 20. Curve *B* is the result of eliminating t between curve *A* of Fig. 18 and curve *B* of Fig. 19, and curve *A* results from *C* of Fig. 18 and *D* of Fig. 19, from which it appears that the effect of an increase in the value of v is to decrease the steepness of the trajectory; the same effect results from decrease in permeability. The trajectory of the particle is also affected by its vertical position when it comes within the effective magnetic field. Thus if the feed belt were closer to the square pole-piece, the effective magnetic range would be smaller; consequently the z-t curve is simply shifted toward the right (curve *E*, Fig. 19), it being assumed that the lower initial value of $H\frac{\partial H}{\partial z}$ has negligible effect upon the shape. The resulting trajectory is also shifted toward the right (curve *A*, Fig. 20).

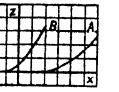

FIG. 20. Trajectory of a particle in Wetherill separator.

Separation of particle elevated by the action of the magnetic force depends upon the interception of its trajectory by the surface of the collecting pole-piece (actually the cross-belt). The factors favoring steeper trajectories and therefore increased probabilities of separation are: increases in permeability, field intensity, inhomogeneity, and particle diameter, and a decrease in speed of feed belt. In practice, inhomogeneity is increased by bringing the wedge-shaped pole-piece closer to the square pole, *i.e.*, by decreasing air gap. This also increases field intensity and in effect brings the particle closer to the collecting pole. When it is desired to increase field intensity alone, the current to the electromagnets is increased. These conditions are opposed by economic requirements; thus, although a zero feed-belt speed insures separation of a magnetic particle placed within the effective magnetic range, capacity requirements necessitate the maximum belt speed compatible with high probability of separation. Similarly infinitely large field intensities are opposed by the economic demand for minimum power consumption.

Removal of idealizing conditions reveals new factors affecting the shape of the trajectory and therefore the probability of separation. If a closely sized mixture of magnetic and nonmagnetic grains is spread over the feed belt in a closely packed single-grain layer, F_z acting on a magnetic particle will be opposed by a frictional force, owing to contact with neighboring nonmagnetic particles, and F_x will be increased by a force resulting from contact with material moving with the belt. Both factors tend to produce a flatter trajectory, and hence to decrease chances of separation. If a closely sized mixture is presented in a closely packed layer two particles deep, a magnetic particle in the bottom layer completely surrounded by nonmagnetic particles is almost completely shielded from the magnetic field, resulting in a decrease of F_z; moreover, its resistance to rise is effectively increased by frictional contact with neighboring particles and by the weight of the overlying nonmagnetic particles. The net effect is a marked decrease in F_z, with consequent flattening of the trajectory and a decrease in probability of separation. The adverse effect of layering may be partially overcome by suitable changes in the factors which tend to steepen the trajectory, *e.g.*, by increasing permeability, field intensity, or inhomogeneity, and by decreasing belt speed. If the particles of a closely packed, single-grain layer are of different sizes, a small magnetic particle surrounded by larger nonmagnetic neighbors is partially shielded from the full action of the magnetic field; hence the value of F_z acting to elevate the particle is decreased. Further decrease is due to the greater distance of the particle from the collecting pole, and to the force resisting passage through the interstice among neighboring particles. When the magnetic particle is small enough to pass through the interstice unopposed, it is small enough to be completely shielded by a contiguous particle; then, as before, F_x is increased by a force resulting from contact with material moving with the belt. The net effect of these additional forces is to flatten the trajectory to such an extent that the probability of separating fine particles is greatly reduced; the probability decreases with increasing size range. There exists, therefore, some CRITICAL SIZE RANGE beyond which the loss of fine magnetic material is too great for economic operation. The critical range is affected by the same factors that affect F_z and F_x; hence increases in permeability, field intensity, and/or inhomogeneity, and decrease in belt speed increase critical size range. If the mixture possesses a long size range, and is presented in the form of a closely packed, multiparticle layer, the adverse effects of shielding and resistance to vertical penetration of the layer by a magnetic particle increase. If the mixture contains a sufficient amount of moisture to impart slight coherence, resistance to exit penetration increases and particle weight is increased by the adhering particles.

Magnetic interaction between magnetic particles is more difficult to assess since it depends upon the geometric arrangement of the magnetic particles. Grouping increases F_z for the group; nonmagnetic material trapped within the grouping reduces the increase in F_z, and the magnetic product

is diluted with nonmagnetic material. The larger the ratio of magnetic to nonmagnetic particles, the greater the probability of levitation as a group, and the greater the chances of entrapment of nonmagnetic particles.

Summary. To separate material of given permeability the maximum usable belt speed depends upon $H\frac{\partial H}{\partial z}$, *i.e.*, upon the field intensity and air gap, increasing as $H\frac{\partial H}{\partial z}$ increases. On the other hand, for a given air gap and field intensity, belt speed increases with the permeability of the material, an upper limit being set by the permeability. Keeping current to electromagnets and permeability constant, belt speed increases with a decrease in air gap; keeping current and belt speed constant, air gap decreases with decrease in permeability; keeping belt speed and air gap constant, current increases with a decrease in permeability. In so far as presentation of feed is concerned, the size range and depth of layer are critical; a broad range requires increase in current, decrease in air gap, decrease in belt speed, or an increase in permeability; the requirements for multiparticle layers are the same. In both cases there exists an upper limit which may not be exceeded if economic recoveries are desired. A decrease in maximum size of feed requires increase in current, decrease in air gap or belt speed, or increase in permeability.

Forces normally acting in magnetic concentrators, in addition to the magnetic force, are gravity, friction, centrifugal, fluid resistance, electrostatic, and capillary. Momentum is of equal importance in determining particle trajectories. Air resistance, electrostatic attraction, and capillary forces are unavoidable; usually they are beyond control and act to decrease the effectiveness of the separation. The air currents created by moving belts, falling material, and the like, and the force required to pull magnetic particles through an air-water interface may be reduced somewhat but not completely eliminated. The nonmagnetic forces that are used deliberately to assist in the separation may act either with or against the magnetic force. When centrifugal force or fluid resistance is the nonmagnetic force, the magnitude and direction of the resultant force can be varied by varying either these or the magnetic force; when gravity or friction is the nonmagnetic force, control lies in the magnetic force alone. When momentum is active in determining the resultant force, it is usually subject to control.

MAGNETIC SEPARATORS

Separators differ greatly according to whether the feed is coarse or fine, wet or dry, and of low, medium, or high permeability. Types have been classified on several bases: (*a*) Intensity of the magnetic field, as low-, medium-, and high-intensity; the same machine often falls in two of the classes and in some cases in all three. (*b*) Medium, in which separation takes place, as wet or dry; some machines fall in both classes. (*c*) Mechanical devices used in the presentation of material to the magnet, as on a belt, pulley, drum, shaking tray, or by free fall through a fluid, etc. (*d*) Mode of disposal of products, as by gravity, cross and longitudinal belts, sprays, scrapers, etc. (*e*) Current characteristics, *i.e.*, alternating- or direct-current separators. (*f*) Nature of the magnetic phenomena utilized, as induced attraction, hysteretic repulsion, coercive-force reaction, etc. (*g*) Motion of magnets, *e.g.*, stationary or moving. (*h*) The classification adopted herein is based on the method used to get the magnetic material onto the collecting surface. When an attempt is made to introduce the feed directly onto the collecting surface, the separator is classified as of HOLDING TYPE; when the collecting surface must attract particles from a feed stream moving in close proximity, as of PICK-UP TYPE.

4. HOLDING-TYPE SEPARATORS

Material is usually fed directly onto the collecting surface, where a component of gravity acts to hold both magnetic and nonmagnetic material. Nonmagnetic material is removed either by flowing water across the collecting surface (in this case usually inclined), a component of gravity aiding, the balance developing an opposing frictional resistance; or by suspension in a fluid; or by transportation by the collecting surface to a region where gravity has no component normal to the surface, discharge being aided by the momentum acquired as a result of such movement. Magnetic material is removed either by mechanical scraping across the collecting surface to a point beyond the action of the magnetic field followed by gravity discharge, or by movement of the material on and with the collecting surface to a point beyond the effective range of the magnetic field where the material discharges by gravity (which may now oppose the magnetic field), momentum aiding.

Drum separators of the holding type consist of rotating horizontal cylinders of nonmagnetic material, ordinarily brass or bronze, surrounding magnet banks conformed to the inner surfaces of the drums. Magnet banks may be either stationary or rotating.

They are built up of individual flat magnets, arranged radially around the drum axis and wound to produce opposite polarities in adjacent poles. Electrical connections are made through a hollow shaft supporting one end of the drum.

Stationary-magnet drum separator (Fig. 21) has a magnet bank fixed to cover between 1/2 and 2/3 of the drum circumference as shown. Feed is distributed along the top element of the drum. Magnetic material, under the coaction of the magnetic field and the frictional force exerted on it by the drum surface, moves with the drum so long as the particles remain in the magnetic field. Magnetization of this moving material persists from the field of one magnet to that of the next; as a result the magnetized particles, which orient themselves along the lines of magnetic force, turn end-for-end in adjusting to the curved lines of force between adjacent poles. In going from one pole to the next nearest pole of like polarity, the magnetised particle executes one complete rotation; thus it travels along the drum surface in its direction of its own rotation a distance $\pi Dn/2$, where D = diameter of particle and n = number of poles. Nonmagnetic material that may have been mechanically held among or under magnetic particles is freed by this winnowing action. The bulk of the nonmagnetic material rolls or slides along the downward-curved downcoming forward face of the drum and falls off as shown, separated from discharged magnetic material by a divider.

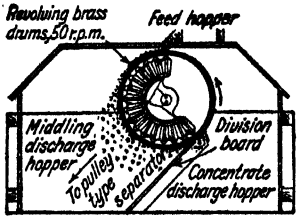

FIG. 21. Drum separator with stationary magnet.

Rotating-magnet separator (Fig. 22) has a full-circle magnet bank *a* which is rotated counter to drum *b* by an independent drive. It requires a take-off roll *c*, of ferromagnetic material, likewise independently rotated. Magnetism is induced in the latter by the main magnet, and its surface is corrugated to accentuate inhomogeneity of field and cause traction toward it from the drum. The magnet rotates much more rapidly than the drum, so that the winnowing travel of magnetized material is not only counter to that of the drum surface, but is more rapid, resulting in a net movement counter to the gravity flow of the nonmagnetic material.

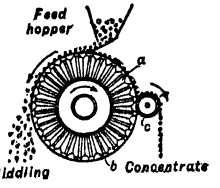

FIG. 22. Drum separator with counter-rotating magnet.

Operation of drum machines. Drums range from 8 to 60 in. in width, 12 to 30 in. in diameter, and are run at peripheral speeds of 150 to 2,000 f.p.m. POWER requirements range from 0.25 to 5 hp. for mechanical operation, and from 150 to 2,500 watts for magnet activation. The activation requirement varies with permeability and feed size. At MT. HOPE (*99 J 562*), 6 amp. at 250 v. is used for 1 1/2- to 2-in. material, 4.5 amp. for 1/2- to 1 1/2-in., and 3.75 amp. for 1/4- to 3/4-in. FEED SIZE ranges from 3-in. to about 100-m. limiting. Fairly close sizing is practiced when concentration is the object; a wider size range is permissible when drum acts as a guard. Spacing of magnets depends on feed size, a closer spacing being used for finer feeds. CAPACITY varies from about 650 cu. ft. per hr. per ft. of width for the smaller machines at 40 to 50 r.p.m. to about 3,000 cu. ft. per hr. per ft. of width for the larger machines at 25 to 40 r.p.m.; capacity varies with feed size, being considerably smaller on the fine sizes.

Double-drum separator (Fig. 23) is an attempt to make finished concentrate on a drum-type machine. The first drum is run slowly with a strong field in an attempt to make a low-grade concentrate and clean tailing. The second drum (*G*) is fed by centrifugal force with the rough concentrate from the first. It is run at higher speed and with a weaker field; as a result low-grade material is dropped into middling compartment (*M*) and only high-grade concentrate is carried around to be thrown over into hopper (*C*). This machine is intended for finer feed than the single-drum machine, the size recommended by the makers being below 2.5-mm. On such material a CAPACITY of 15 to 20 tons of magnetite ore per hour is claimed on drums with 24-in. face, running the first drum at 40 r.p.m. and the second at 50, drawing 10.5 amp. and 13 amp. respectively. POWER required for driving is 0.5 to 0.75 hp.

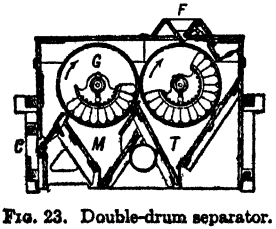

FIG. 23. Double-drum separator.

A double-drum separator (Fig. 24) of local design was used at WITHERBEE SHERMAN (*IC 6624*). The magnets were mounted as in the standard type except that 14 were used, the upper 6 being stronger than the lower 8. The upper drum drew 9 amp. at 125 v. while the lower drum took 12 amp. at 125 v. Peripheral speed of drums was 340 f.p.m. Feed to the upper drum was separated into a concentrate and middling; the latter went to the lower drum, where a clean tailing and middling were made. Concentrate assayed 66% Fe (by magnetic determination) and tailing 1.2%. Feed assay was probably between 40 and 52% Fe.

Double-drum separators arranged with one drum above and to one side of the other are used to remove magnetic particles of high reluctance. The upper drum subjects the feebly magnetic particles to an intense magnetic field and thus makes them more susceptible to the second drum, which receives the discharge from the first. This separator has been especially designed for the removal of very fine iron and iron oxide from nonmetallic minerals.

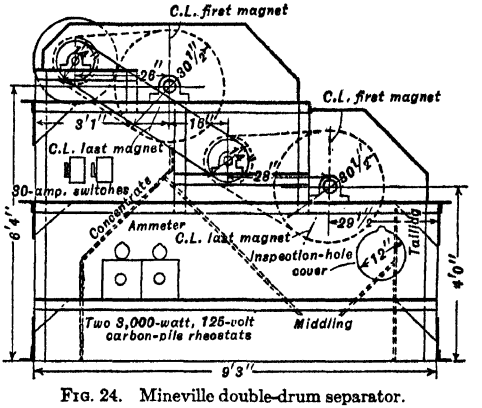

FIG. 24. Mineville double-drum separator.

Performance. Single-drum separators at WITHERBEE, SHERMAN CO. (*96 J 959*) were 30-in. diam. by 18-in. face, made of brass, rubber covered. Each contained 16 magnets. They ran at 50 to 56 r.p.m., and were used to treat sized feed 3/4~3/8-in. and 3/8~1/4-in. Capacity was about 10 t.p.h. on the finer feeds (*IC 6624*). In one mill treating coarsely crystalline ore, material 2~0.75-in. was also treated on drum machines. They made concentrate assaying about 60 to 65% Fe and a middling assaying about 18% from feeds ranging between 25 and 45% Fe. About 4 amp. at 125 v. was used on the coarse feeds, 7 amp. on finer feeds. From 0.5 to 0.75 hp. was required for driving. One man attended 17 separators of drum and pulley types. At REPLOGLE STEEL CO. 2-drum machines with drums 36-in. diam. by 28-in. face with 14 magnets per drum were run at 49 r.p.m.; feed rate was 14.9 t.p.h. Sizing test of feed and products is given in Table 4. Average assays: Feed, 33.4% Fe; concentrate, 62% Fe; tailing, 22.4% Fe. Iron in tailing was mostly hematite. Similar drum machines were used to treat reground middling from belt separators. Sizing test of feed was about the same as given in Table 4. Average assays: Feed, 26.8% Fe; concentrate, 57.4% Fe; tailing, 20.6% Fe (mostly hematite, went to gravity mill). One of the separators in retreatment service had 30×42-in. drums with 27 magnets in the upper drum and 45 in the lower. Average tonnage on retreatment machines was 17 each.

At MESABI IRON CO. a 30×30-in. drum drawing 7 1/2 amp. at 110 v. was fed with deslimed <4-m. sand (58.2% water) at the rate of 8.7 t.p.h. Assays (magnetic Fe, %) were: Feed, 36.7; concentrate, 48.2; tailing, 9.5.

At MT. HOPE manganese-steel shells were substituted for brass on the drum. These shells, 1/8-in. thick, lasted four times as long as the brass drums and the cost per ton was one-quarter as much. Roche substituted pure rubber bands for manganese steel at the RICHARD mine and found that the life of 3/16-in. rubber was three times that of the steel, with a further saving in installation time and power consumption. Roche used four bands on a 24-in. drum and found that the bands could be readily snapped on drums by merely lifting one end of the shaft out of its bearings.

Table 4. Sizing tests of feed and products of drum-type separators, Replogle Steel Co.

Screen, mesh	Weights, per cent.		
	Feed	Concentrate	Tailing
20	14.6	15.5	10.2
40	37.5	50.1	37.4
60	30.4	14.5	23.7
80	7.6	3.8	5.1
100	3.1	1.4	3.4
<100	6.8	14.8	20.1

Wenstrom separator is a drum-type machine for coarse feeds, used in Swedish mills in the same position as the drum separator. The flanged drum is built up of alternate lamellae of wood and soft iron. The electromagnet is circular in cross-section but has annular grooves containing the winding and is wound in such a way that alternate poles have opposite polarity. It is placed eccentrically within the drum. Projections from the inner face of the iron drum lamellae are so arranged that those of alternate lamellae approach opposite poles of the magnet during their downward travel and are thus magnetized by induction; during their upward travel they are out of the effective field of the primary magnet and lose their induced magnetism. The effect is somewhat the same as in the drum machine, except that the magnetic agitation of pulp on the drum is not so active in the Wenstrom machine. A 30×24-in. drum is said to require about 15 amp. at 110 v. and to treat from 5 to 10 tons of 1- to 2-in. magnetite ore per hour at 30 r.p.m.

Use. The magnetic drum is essentially a low-intensity roughing machine. In concentrating iron ores it is used to make a clean concentrate and a middling for retreatment. In treating industrial minerals it is used to remove iron and iron-bearing impurities, also to remove magnetite prior to a high-intensity separation of two nonmetallic products. Drums are also used to remove tramp iron from the feed to crushers, grinders, etc.

Magnetic-pulley separators (Fig. 25) consist essentially of a belt conveyor with a magnetic head pulley, a feeder to deliver a thin layer on the carrying portion of the belt, and a divided receiving chute to take the two products. The magnetic pulley consists of a number of circular, horseshoe electromagnets, cast integrally or in sections, of highly permeable, homogeneous, electric steel (usually dynamo steel) properly annealed, the

whole assembled on a common shaft. The magnet is energized by direct current, and is so wound or assembled that adjacent poles are of like polarity, electrical connection being made through slip rings on the pulley shaft. As the ore passes over the pulley, the nonmagnetic portion discharges by gravity or acquired momentum in a parabolic path; the magnetic portion is held by the magnet against the belt until it is carried out of the field at the underside of the pulley, where it is discharged by gravity.

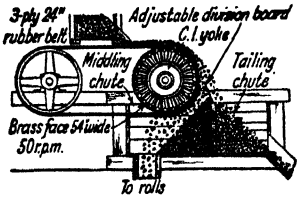

FIG. 25. Magnetic-pulley separator.

Pulley diameters range from 12 to 30 in., belt widths from 12 to 90 in. Belt speed is 125 to 500 f.p.m. CAPACITY varies with field strength and feed size; manufacturers' average figures range from about 800 to 1,850 cu. ft. per hr. per ft. of belt width. POWER required for mechanical operation increases with belt width and ranges from about 1/2 hp. for a 12×12-in. pulley to 10 hp. for a 30×60-in.; for magnet activation, power increases with pulley diameter and width; average manufacturers' figures are 415 watts for a 12×12-in. pulley, 3,080 watts for a 24×48-in., and 7,850 watts for a 48×60 in.

Performance. At WITHERBEE, SHERMAN CO. (*96 J 959*) 20-in. pulley machines treated 2~0.75-in. crude ore at the rate of 300 tons per machine per day and also treated the sized middling from drum machines. Each pulley had 25 magnets and drew about 25 amp. at 125 v. Feed was practically dry. Pulley speed, 40 to 50 r.p.m., giving a belt speed of 250 to 320 f.p.m. Feed assayed 35% Fe and tailing 6 to 8%. Rough concentrate was sent to drum machines. Pulley machines were also used to rough out tailing on drum rejects sized to 2~1 1/4-in., 1 1/4~3/4-in., 3/4~1/2-in., and 1/2~5/16-in. Tailing averaged 4.2% Fe on the 2~1 1/4-in. and 1.85% Fe on the 1/2~5/16-in. material. One man attended 17 separators of the drum and pulley types.

At INTERNATIONAL NICKEL CO. a capacity of 75 t.p.h. is reported for a 36×36-in. pulley cobbing nickeliferous pyrrhotite from a low-grade nickel ore crushed to <3 1/2-in. At CLIMAX 1,000 t.p.h. is reported for a pulley with a 54-in. belt, removing tramp iron from cone feed.

Uses. Magnetic pulleys are used to remove tramp iron from the feed to crushers and grinding machines, to remove magnetic contaminants, usually iron, from finished nonmetallic products, and to concentrate minerals from their associated gangue. In the latter capacity they function best on coarse or lump material, although material as fine as 48- or 65-m. has been handled. Pulleys produce clean tailing and a concentrate requiring further treatment, hence they are used in magnetite milling to retreat reject from drum machines, producing a discardable tailing and thus reducing load on regrind machines.

Drum-pulley machine (Fig. 26) is a combination of the two machines just described, designed to economize floor space and headroom and deliver, from one machine, finished concentrate and tailing, and middling for retreatment. Construction and operation of each part are the same as in the separate machines.

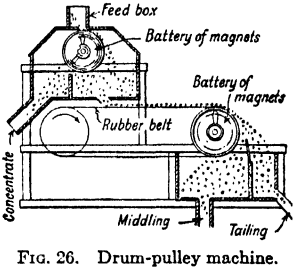

FIG. 26. Drum-pulley machine.

Induced-roll separator (Fig. 27) consists essentially of a number of high-intensity drums in series. Transversely laminated rolls *A* made of alternate sheets of a highly permeable material such as soft iron and of a nonmagnetic material such as zinc are located between the poles *C* of an electromagnet and the induced poles *B* of a bridge-bar or keeper, and are rotated in the directions indicated. Keeper poles *B* are accurately machined to conform to the rolls, which are placed in close proximity to them to minimize air gap and consequently the reluctance of the magnetic circuit. Primary poles *C* are machined as shown, located with apices substantially in the 45° diametral planes of the corresponding rolls, with an adjustable gap. The curvilinear contour below the apex is said to conform to the trajectory of the nonmagnetic material delivered from the roll. The primary poles induce, over a short length of arc of each lamination of the corresponding roll, a magnetic pole of opposite polarity, the lines of force being more concentrated over the arc than over the primary pole; the keeper provides the magnetic circuit with a magnetic conductor of low resistance and thus insures maximum concentration of flux lines over the roll surface. Air gaps are adjusted so that field intensity is progressively higher as the material proceeds from top to bottom; on the roughing roll A_1, the field may also be weakened by not bringing the primary pole piece *C* to as sharp an apex as for the other rolls and by not providing a keeper. Feed is introduced from a hopper feeder onto the upper surface of the roughing roll at the same rate as the peripheral speed thereof. The less susceptible portion is discharged from the brow of the roll in a parabolic trajectory determined by gravity and acquired momentum; the more susceptible material is attracted to the magnetic lamina-

tions and there held until, by rotation of the holding lamina out of the magnetic field, attractive force is reduced, when discharge takes place by gravity. An adjustable knife edge D_1 is set to make a cut at any desired point of the discharge stream. Magnetic fractions fall directly into discharge spouts; the less magnetic fractions are treated further on lower rolls. Number of rolls depends upon the feed; separators with seven rolls are reported. A roughing roll is indicated when the separator has an odd number of rolls; it is optional, used for treating materials containing a small amount of abraded iron or other strongly magnetic material which must be removed before material reaches the high-intensity rolls, since these would otherwise be fouled. A duplex-type machine consists of two standard separators placed back to back, with one coil serving four instead of two poles.

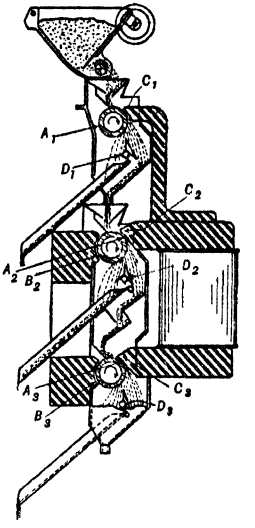

FIG. 27. Stearns induced-roll separator.

Roll width ranges from 4- to 90-in.; diameter usually about 5-in.; speed is 100 to 200 r.p.m. POWER required for driving ranges from 1/8 to 15 hp.; for energizing the magnets from 100 to 22,000 watts is required, depending on roll width, number of rolls, and material to be treated. CAPACITY depends upon the permeability and size of material treated, width of rolls, number and speed of rolls, and the completeness of separation required; it is estimated at about 10 times that of the high-intensity pick-up separators (*Bul 425 USBM 198*). CAPACITIES of 2 t.p.h. for four separations and of 3 t.p.h. for five separations, requiring respectively 100 and 300 watt-hr. per ton, are reported.

Uses. This separator is used primarily for the separation of weakly magnetic materials, to produce one or more concentrates, one or more middlings, and tailing. Feed must be clean (*i.e.*, washed), dry, finer than about 8-m. but not finer than about 200-m.; the lower limit is imposed because of dusting and sticking to the roll surface.

Performance. Successful use in the following services is reported: biotite, garnet, tourmaline, and muscovite from run-of-mine pegmatite (*IMR 262*); tourmaline and biotite from feldspar (*17 MM 441*); iron from feldspar (*IC 6488*); limonite after roasting from barite (*IMR 106*); abraded iron, pyrite, magnetite, limonite, garnet, biotite, and some muscovite from kyanite (*138 J 46*); magnetite and muscovite from nepheline syenite (*18 Glass Ind. 204*). At the WARWICK mine the ore containing 45% ilmenite and 20% apatite, together with micaceous minerals, is ground, deslimed, dried, and separated into a salable magnetic ilmenite, a weakly magnetic micaceous material, and a salable nonmagnetic apatite concentrate (*43 CME 24*). Other reported applications are cleaning gangue from manganese ores, separation of wolframite from tin and silica, and of molybdenite from scheelite. At COLONIAL SALT CO. (*Bul 425 USBM 303*), iron specks introduced into salt by contact with iron vessels are removed from the hot, dry material by two-roll machines fed at the rate of 3 t.p.h. At BRIDGETON SAND CO. (*ibid.*) a white sand analyzing 99% SiO_2, 0.1% iron oxide, and some ilmenite and clay is washed, piled, drained, dried, and then screened on a 22-m. screen; the warm undersize goes to a 3-roll separator which makes a product containing 0.018 to 0.02% Fe. Cost of the magnetic operation is 15¢ per ton. At MAGNET COVE mill orthoclase feldspar carrying about 5% TiO_2 in the form of rutile, brookite and ilmenite, and some iron-bearing minerals, such as limonite, magnetite, goethite, etc., is first concentrated by tabling. Table concentrates are then given both an oxidizing and reducing roast which cracks fine particles of iron from the surface of the titanium crystals. The cool product is sized into five fractions, *viz.*, >30-, 30~40-, 40~55-, 55~70-, and <70-m, then the three finer fractions are each passed through a low-intensity roll which makes a magnetic product assaying 6% TiO_2 and a tailing which passes through 3 @ 3-roll separators in series. The composite assay of the magnetic product of the first two separators is 60% TiO_2, the assay of the third 80% TiO_2, and of the nonmagnetic 93% TiO_2.

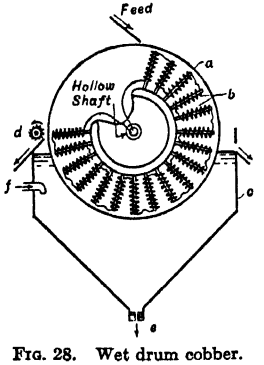

FIG. 28. Wet drum cobber.

Wet drum cobber (Fig. 28) comprises a standard rotating brass drum *a*, with stationary magnets *b* extending through about 245° of arc, submerged to approximately 1/3 of its diameter in a spitzkasten *c*. Wet pulp is fed at the top of the drum in the direction of rotation; some of the nonmagnetic portion is washed off the drum by the feed water, the balance is discharged by gravity under water in the spitzkasten; the magnetic portion, held to the drum surface, is carried out of the water on the rising side of the drum and is removed by a counter-rotating longitudinally ribbed induction roller *d*. Sand tailing discharges through spigot *e*; slimes are overflowed with water introduced at *f*. Drum is 36 in. diam., 6 in. wide, and is rotated 40 r.p.m.; the take-off roller runs at 400 r.p.m. The machine is said to work best in the range from 8- to 100-m., but can treat sizes up to 1/2-in. (*Bul 425 USBM 201*).

Roche wet belt machine (Fig. 29) consists of an endless rubber vanner belt *a*, 30 in. wide, 2-ply with 2-in. flanges, set on a slope of 10 to 80°, usually 30°; and a battery of 20 electromagnets 30 in. long, spaced 3 in. center to center, having alternating poles of opposite polarity, enclosed in a properly ventilated, waterproof copper box *b*, all set underneath the upper run of the belt as shown. Feed is introduced at *f*; the magnetic portion, held against the belt by the action of the magnets, is carried up slope against a stream of wash water supplied through spray pipes *c*; the nonmagnetic material, acted on by wash water and gravity, flows downslope and discharges over the tail roller. Washing of concentrate is aided by the winnowing motion caused by the alternating polarity of the magnet poles. Concentrate is discharged by immersion of the belt in water box *d*, aided by spray *e*.

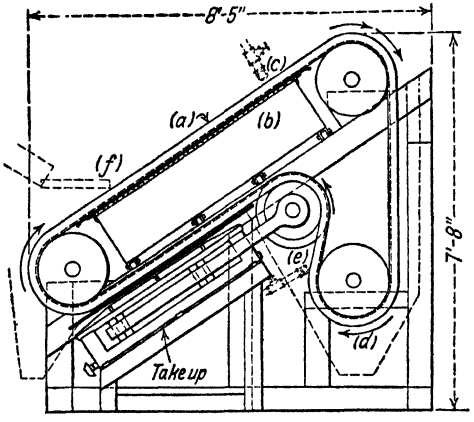

FIG. 29. Roche wet belt separator.

Maximum SIZE OF FEED is 1/4-in. but the best results are obtained with material passing 1/8-in. or 1/16-in. screen. Current supply should be up to 20 amp. at 125 v. One hp. is required for running a 2-belt unit. Belt SPEED is 200 f.p.m. Roche (*115 J 971*) states the CAPACITY on magnetite ore to be 3 t.p.h. per ft. of belt width with a total water consumption of 2 g.p.m. per in. of belt width. CURRENT draft is 5 to 10 amp. at 125 v. Table 5 gives comparative results obtained by this machine and a dry belt-type machine treating ore from the RICHARD MINE.

Performance. At the SCRUB OAK plant (*134 J 241, 273*) ore containing 33% Fe, of which 18% was nonmagnetic martite, 0.075% P, and 36% SiO_2, was crushed through 6-m., concentrated by gravity, and the gravity tailing treated as follows: 6 @ 36-in. separators fed at 16.5 t.p.h., run at 200 f.p.m., drawing 14 amp. at 125 v. produced a primary rough concentrate assaying 45% Fe, and a finished tailing containing 1.2% Fe, from a feed assaying 24.6% Fe; rough concentrate went to 6 @ 36-in. primary finishing machines fed at 11 t.p.h., run at 200 f.p.m., drawing 6 amp. at 125 v. (current decreased to increase grade), making a finished concentrate of 60% Fe and a middling of 30% Fe, which was reground in a rod mill, the discharge of which went to four secondary roughers making finished tailing assaying 1.2% Fe and a secondary rough concentrate containing 45% Fe; this was cleaned by four finishing machines making finished concentrate (60% Fe) and a 30% middling which was returned to the rod mill.

Table 5. Comparison of concentrate made by Roche wet separator and dry belt separator (*a*)

Screen size, mesh	Belt separator, per cent.		Roche separator, per cent.	
	Weight	Fe	Weight	Fe
20	34	54.06	37	55.16
30	22	57.03	22	69.03
60	20	62.61	20	68.31
80	14	59.01	20	67.22
100	7	51.03	0.5	66.41
200	2	43.21	0.25	66.03
300	1	41.16	0.25	61.09
Total.....	100	56.56	100.00	63.25

a Feed to both machines all through 8-m. (0.084-in.) screen and on 300-m.; assay, 48% magnetic Fe. Dry belt machine: tailing, 17.93% magnetic Fe; ratio of concentration, 1.28; recovery, 91.8%. Roche machine: tailing, 2.19% magnetic iron; ratio of concentration, 1.33; recovery, 98.9%.

Magnetic log washer (Fig. 30). As originally designed, this machine was similar to the ordinary two-log washer (Sec. 10, Art. 4) but had, additionally, a bank of primary magnets underneath the tank as shown in Fig. 30. In the later design, similar to that of an Akins classifier (Sec. 8, Art. 3), the logs were replaced by two helical-screw conveyors made from copper-ribbon spirals which form a four-thread worm of relatively long pitch. Ore pulp is fed into the trough about one-fourth the way from its lower end; the magnetic portion, usually of higher density, under the combined action of gravity and magnetic attraction, falls to the bottom of the trough, along which it is worked uphill by conveyor action until it is forced over the top end of the trough; the nonmagnetic portion is kept in suspension by water currents and flows over a tailing weir. Concentrate is washed by sprays directed at the point where concentrate emerges from the pulp.

Use. This is essentially a slime machine, not suited to treatment of feed coarser than 48-m.; treatment increases in efficiency as the feed is finer. All >48-m. material goes into the concentrate, with resulting lowering of grade.

Performance. Machines installed by MESABI IRON CO., 14 ft. long and 2 ft. wide, with two spirals per tank, treated <150-m. feed containing about 35% magnetic Fe at the rate of 50 to 75 tons per

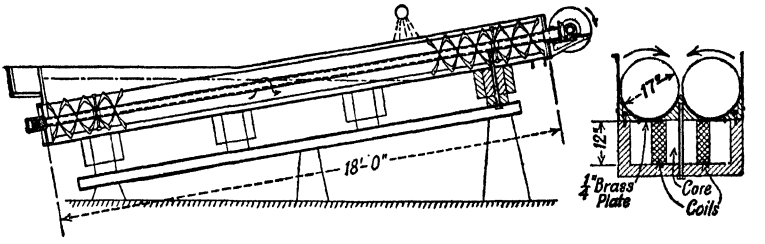

FIG. 30. Magnetic log washer.

24 hr. and produced 65% concentrate and a tailing containing from 1 to 2% magnetic iron. The machines for the final installation at Mesabi were 18 ft. long and 6 ft. wide, equipped with four spirals; produced from 50 to 125 tons of concentrate per 24 hr., the amount depending on the difficulty experienced in washing concentrate. W. G. Swart stated that the machine required about 0.25 hp. for excitation and the same for mechanical operation and that it recovered 95 to 98 per cent. of the magnetic iron fed. Character of concentrate depended upon the extent to which mineral was freed, fineness of grinding, and amount of washing. With grinding fine enough to permit gangue to be kept in suspension, and to free mineral with substantial completeness, concentrate assaying 65 to 70% Fe as magnetite was readily made. Wear with fine feed was negligible.

Frantz Ferro-filter (Fig. 31). Pulp is flowed through a tube containing a set of screens *A* magnetized by an electromagnet *B;* in this manner a magnetic particle repeatedly passes close to the magnetic edges of the screens until it is finally acted upon by a magnetic force sufficiently great to overcome the viscous drag; it is held at the edge until screens are demagnetized. The screens, made from steel of high permeability, are stacked between two spiders *D* and centrally located by means of a center tube *C*. The material to be separated is passed through the screens, either by gravity feed from above or by forced feed from below; the cleaned product passes out either through a discharge pipe in the bottom or over a discharge lip at the top. Pulp level is regulated by a discharge valve operated by float *E*. The separator may also be equipped with a magnetic safety valve *F*, made of magnetic tubing, which falls and closes the discharge in case of current failure, thus preventing contamination of cleaned product.

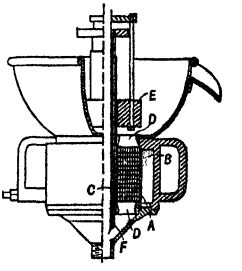

FIG. 31. Frantz Ferro-filter.

Sizes are rated to handle from 50 to 2,000 g.p.h., with different screen openings; lineal feet of screen collecting edges ranges from 260 to 5,000 ft. POWER requirements range from 115 to 275 watts. In a recently reported model, screens were made of a permanent magnetic material. Operating cost averages between 2 and 4¢ per ton.

Use. Removal of magnetic impurities from slurries, slips, glazes, enamels, lubricating oils, etc. Particles of ilmenite as small as 1-μ may be removed (*45 % 5 CME 274*). At LENOX, INC. (*425 Bul USBM 292*), ceramic body composed of clay, flint, and feldspar, weighing 31.25 oz. per pint (67° Baume), and of such viscosity that 1 lb. of slip flows through a 3/8-in. opening in 1 hr., is cleaned of abraded iron by large Ferro-filters having a capacity of 1,000 lb. per hr.

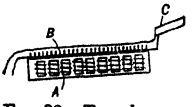

FIG. 32. Trough separator.

Magnetic trough separator (Fig. 32) consists of a magnet battery *A*, housed in a waterproof copper casing, over which is placed a removable tray, having the bottom studded with rectangular auxiliary pole-pieces *B*, appropriately staggered. Pulp fed from a pipe or launder *C* flows downhill and discharges into a suitable receiver; during its run it is subject to the magnetic field induced in the auxiliary poles, magnetic contaminants being attracted and held thereto. This machine is used primarily to remove small amounts of magnetic material from clay slip and the like.

5. PICK-UP SEPARATORS

With this type, feed does not come into direct contact with the collecting surface but is conveyed through the magnetic field by suitable means and therein magnetic particles

are attracted, gravity usually opposing, and are moved through a short distance to a moving collecting surface, which then transports them to a point beyond the magnetic field, where they are discharged by the action of gravity, scrapers, sprays, etc. Nonmagnetic material follows the path of the feed means and is discharged by gravity, momentum aiding, at a suitable point. With wet machines of this type, owing to eddy currents, some nonmagnetic material does come in contact with the collecting surface and is mechanically entrained. Except for materials of high permeability, the ratio of magnetic to gravitational force required to effect separation is greater for this type than for the holding type (p. 15), since the range of the effective magnetic force must be greater.

Belt separator (Fig. 33) consists essentially of a feed belt *b* which carries material into the magnetic field of a battery of d-c. electromagnets *c*, and a take-off belt *d*, running directly under the magnets, which removes attracted magnetic particles. A suitable feeder *a* regulates feed to belt *b*. The battery consists of 8 to 12 magnets wound so that poles alternate in polarity. In one variant the pole-pieces are arranged in herringbone pattern to produce vibration of belt *d*, thus assisting in cleaning. As material comes into the magnetic field the magnetic portion is lifted to the underside of belt *d*, which runs at a higher speed than belt *b;* lifted material is carried forward by friction against *d*. Magnetic particles, aligning with the lines of force, form depending loops, which break and reform as the belt carries material forward; this enables weakly magnetic middling and entrained nonmagnetic material to be dislodged and fall into hopper *M*. Strongly magnetic material is carried forward until it passes out of the field and is discharged into hopper *c*. Nonmagnetic material remaining on the feed belt is discharged over the head pulley, usually into the same hopper as the middling.

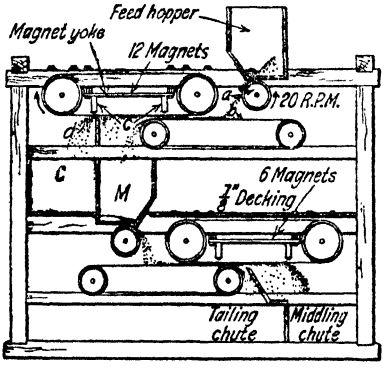

FIG. 33. Belt separator, series type.

This low-intensity machine is used primarily in treating dry sized ores ground finer than 1/2-in., and containing a strongly magnetic mineral.

Usual belt speeds are 100 to 250 f.p.m. for the feed belt and 200 to 400 f.p.m. for the take-off belt, the lower speeds corresponding to the more weakly-magnetic material, such, for instance, as magnetite middling, and coarser sizes. In treating magnetite ore passing 1/4-in. screen, the current requirement for a 12-pole machine is from 4 amp. at 250 v. when lifting concentrate, to 8 to 10 amp. when lifting middling. The machine shown in Fig. 33 is a 2-deck machine of the series type in which middling from the first belt is retreated on a second belt that makes a true middling and a tailing that can be rejected.

In the 2-deck parallel machine, used for fine material that does not contain sufficient middling to justify regrinding and retreatment, clean concentrate and finished tailing are made on each deck, and the use of multiple decks is resorted to only in order to increase capacity per unit of floor space. Where both series and parallel types are used in a mill, as at Witherbee, Sherman Co., the series type is used on coarser feeds, say >1/16-in., and the parallel type on the <1/16-in. material. Usual **belt widths** are between 18 and 30 in. **Capacity** of a 24-in. machine on <1/4-in. crude magnetite ore is 20 to 25 t.p.h.; Roche (*115 J 972*) gives the capacity on magnetite ores crushed to pass 8-m. as 1 long ton per ft. of belt width per hour but this is undoubtedly low. Capacity varies nearly in proportion to diameter of feed within the range of sizes treatable. Capacity is increased and grade of products is bettered if feed is closely sized. At Mt. Hope (*99 J 563*) the sizes treated are: 5/16~3/16-in., 3/16~1/8-in., 1/8~1/16-in. and <1/16-in. At Replogle Steel Co. double-deck separators are of the parallel type, with 26-in. 2-ply belts and 10 magnets per deck. Speed of feed belts is 209 f.p.m.; magnet belts, 335 f.p.m. Average feed rate, 15 t.p.h. Sizing tests of feed and products are given in Table 6. Average assays: Feed, 31.4% Fe; concentrate, 61.1% Fe; tailing (middling), 27.0% Fe. Iron in tailing is mostly hematite.

Table 6. Sizing tests of feed and products of belt-type separators at Replogle Steel Co.

Screen	Coarse feed, weight, %			Fine feed, weight, %		
	Feed	Concentrate	Tailing	Feed	Concentrate	Tailing
1/8-in.	10.3	.....	.....	.....	.....	.....
10-m.	8.0	25.6	33.4	.....	.....	.....
20	42.4	31.8	44.9	.....	.....	.....
40	20.3	28.0	11.8	33.0	26.6	32.9
60	8.1	6.8	5.5	27.8	48.2	40.0
80	3.3	2.0	1.1	10.7	4.4	8.1
100	1.8	1.5	0.5	5.9	4.4	5.8
<100	5.8	4.4	2.7	22.6	16.4	13.2

The same-sized separators at the same belt speeds are used to treat <20-m. product at the rate of 10 t.p.h. Sizing tests of feed and products are given in Table 6. Average assays: Feed, 32.7% Fe; concentrate, 59.1% Fe; tailing, 19.9% Fe (hematite; to gravity mill).

Wetherill separator (Fig. 34) consists essentially of a feed belt *c*, which carries material through convergent magnetic fields produced between flat and wedge-shaped pole-pieces, and a cross belt *d* for removal of concentrate. Both magnets are of the horseshoe type, energized by regulated direct current and wound so that opposite poles are of opposite polarity. The lower flat poles *a* are fixed, the upper wedge-shaped poles *b* may be raised or lowered to give an interpole distance of about 1 1/4- to 3/8-in. The cross belt runs over a series of two or three pulleys and directly under the upper pole in a direction at right angles to the feed belt. Magnetic particles lifted toward the upper pole come in contact with the cross belt and, owing to friction, are carried off toward the front of the pole, which is horn-shaped to reduce field intensity and thus facilitate discharge. A feeder located near the tail pulley of the feed conveyor regulates feed thereto; tailing is discharged over the head pulley. The action of this separator is discussed on p. 13.

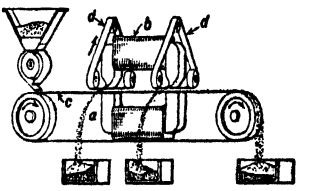

FIG. 34. Wetherill magnetic separator.

This machine is made with one, two, three, or four pairs of poles and with feed-belt widths of 6- to 18-in. Table 7 gives manufacturers' data on various mill sizes for machines with 18-in. pole widths. Current regulation of each pair of electromagnets is made with a rheostat, an ammeter indicating change. Speed of feed and cross belts is adjustable.

Use. The Wetherill, being a high-intensity machine, is used primarily for the separation of weakly magnetic minerals and of mixtures of minerals whose difference in permeability is small.

Effect of adjustments. CURRENT strength varies the strength of the magnetic field and consequently, if the pole distance remains constant, the character and amount of products lifted from the feed belt. Too great current strength causes concentrate to cling under the upper poles and fail to discharge uniformly, with the result that clusters of concentrate build up and are scraped off by the feed belt or crowd material off the feed belt. The current drawn varies from about 5 amp. on the first magnet of a 6-pole (3-magnet) machine to 35 amp. on the last magnet. Variation in POLE DISTANCE is an important adjustment. If the pole distance is too great, current strength must be increased in order to make the desired recovery and difficulty in discharging concentrate results, as explained above. With too small pole distance the cross stream of concentrate brushes gangue off the feed belt into the concentrate receiver and thereby lowers the grade of concentrate. Pole distance depends upon the permeability of the concentrate and upon the size of feed particles. It may be as great as 1 in. plus the thickness of the feed belt (usually 1/4 in.) on coarse material of relatively high permeability, whereas it may need to be as small as 1/8 in. if the permeability is low and the feed fine. Thickness of feed belt is preferably less than 1/4-in. if the concentrate is very feebly magnetic; 1/8-in. is, however, the practical minimum. The take-off belt should be and is made as thin as possible, usually about 1/32 in. thick. SPEED OF BELTS affects capacity and recovery. The feed belt is run as rapidly as possible, in order to make capacity as large as possible, but if ore is fine, dusting limits the speed to between 200 and 300 f.p.m., while on coarser material a limit is imposed by the inability of the magnetic field to overcome the momentum of the particle. From this point of view, of course, the speed for feebly magnetic materials must be least and feed must be fairly uniform in size, whereas greater speed and less uniformity in feed size are allowable with more permeable substances. Effect of size of feed on speed is shown in Table 8. The usual speed of the feed belt is from 50 to 100 f.p.m. on feebly magnetic materials and from 100 to 300 f.p.m. with material of medium permeability. WIDTH OF

Table 7. Sizes of Wetherill separators

Number of poles	Magnet wound for ampere turns			Total watts	Mechanical hp. to drive
	First magnet	Second magnet	Third magnet		
2	30,000	.....	.....	1,200	1.5
2	60,000	.....	.....	1,600	1.5
2	100,000	.....	.....	3,200	1.5
4	30,000	60,000	.....	2,800	2
4	30,000	100,000	.....	4,400	2
4	60,000	100,000	.....	4,800	2
6	30,000	60,000	100,000	6,000	3
8 *a*	20,000	30,000	60,000	7,000	3

a A fourth magnet is wound for 100,000 ampere turns.

FEED BELT also affects capacity, but is practically limited to 18 in. because of the fact that with greater width the mass of material on the take-off belt is so great that it scrapes gangue off the feed belt unless the pole distance is made impossibly great. Ratio of concentration affects width of feed belt, a low ratio with the correspondingly great bulk of concentrate requiring a narrower belt than a high ratio. SPEED OF TAKE-OFF BELT is limited by the kind of material removed and the size of particles. It may be higher with strongly than with weakly magnetic material and higher with fine than coarse particles.

Table 8. Adjustments of Wetherill-Rowand separators at New Jersey Zinc Co., Franklin mill

Magnet separator number	1 *a*	2 *a*	3 *c*	4 *c*	5 *c*	6 *c*	7 *c*
Number of machines for each size	12	24	8	8	6	6	4
Feed rate, t.p.h.	4.2 *b*	1.8	2.4	2.5	3.1	3.3	3.5
Feed, in.: <	0.023	0.023	0.035	0.042	0.065	0.089	0.101
>	0.003	0.003	0.023	0.035	0.042	0.065	0.089
Speed conv. belt, f.p.m.	220	105	110	110	120	116	107
Speed take-off, f.p.m.:							
Pole 1	1,065	698	794	650	640	640	640
Pole 2	688	698	794	650	640	640	640
Pole 3	.....	557	700	560	560	560	550
Pole 4	.....	557	700	560	560	560	550
Pole 5	.....	.....	575	520	510	510	500
Pole 6	.....	.....	575	520	510	510	500
Air gap, 32nd inches:							
Pole 1	20	18	22	24	26	32	34
Pole 2	15	16	20	22	24	28	30
Pole 3	.....	15	18	20	22	26	28
Pole 4	.....	14	16	17	20	24	26
Pole 5	.....	.....	16	17	18	22	24
Pole 6	.....	.....	14	15	16	18	20
Energizing voltage	125	125	125	125	125	125	125
Current, amperes:							
Magnet No. 1	5.5	5.5	5.5	5.5	5.5	5.5	5.5
Magnet No. 2	.....	10.0	7.0	7.0	7.0	7.0	12.0
Magnet No. 3	.....	.....	14.0	14.0	14.0	14.0	16.0
Power consumed, hp.	1	1.5	1.5	1.5	1.5	1.5	1.5
Attendance, machines per man	12	24	16	16	16	16	16
Lost time, %	2	2	2	2	2	2	2

a The 36 machines of Cols. 1 and 2 are arranged in twelve similar groups, each consisting of one primary separator (Col. 1) and two final separators (Col. 2). Both poles of the primaries and the first two poles of the final separators produce franklinite for shipment. The last two poles of the final separators produce a mixed low-grade product, also for shipment. Tailings from each group constitute feed to tables for willemite-calcite separation (see Sec. 2, Fig. 106).

b Feed is composite of new feed and reground middlings from separators in Cols. 3 to 7.

c These machines make a franklinite concentrate for shipment, middlings for regrind, and a tailing which constitutes feed to jigs for willemite-calcite separation (see Sec. 2, Fig. 106).

Speed of take-off belt is the limiting factor in the capacity of a machine when the ratio of concentration is low, while speed of feed belt limits when ratio is high. Young (*106 J 868*) recommends not more than 50 to 100 lb. per hr. per cross belt for a 6-in. machine. Capacity on wolframite-cassiterite ore is as low as 0.75 ton per 24 hr. on account of fineness and necessity for clean products (*120 P 379*). The feed must be perfectly dry in order to permit free movement between particles and not too fine or slime will stick to the feed belt.

Performance. At NEW JERSEY ZINC CO., Franklin mill, 6-pole 18-in. Wetherill-Rowand machines (Fig. 35) treat an ore containing franklinite, willemite, zincite, and calcite and make franklinite as

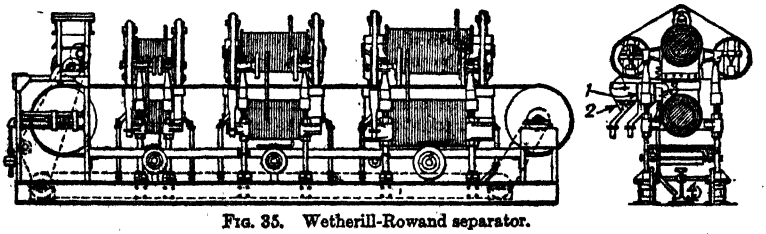

FIG. 35. Wetherill-Rowand separator.

concentrate. Two or more products are taken from each cross belt by means of the hoppers (1), (2), the most highly magnetic material being thrown farthest. Gangue swept off falls into (3) and

thence by conveyor (4) back to the feed end. Adjustments are shown in Table 8. An approximate mineralogical analysis of the products of one separator is shown in Table 9. At ALGONQUIN MINE, Philipsburg, Mont. (*116 J 181*), pyrolusite and psilomelane occur in a siliceous gangue. A Wetherill 6-pole machine (see Table 7) took 5~10-m. feed. Speed of feed belt, 95 f.p.m.; take-off belt, 250 f.p.m. Concentrate from the first pole contained 10% Fe and was rejected; other poles delivered concentrate assaying 75 to 80% MnO_2; tailing assayed about 10% MnO_2. A second machine of the same type treated 10~100-m. material and made similar products except that the product of the first pole contained about 20% Fe. At S. AND M. SYNDICATE (*120 P 379*), feed was gravity concentrate containing wolframite, bismuthinite, and cassiterite; a four-pole separator with weak current on the first two poles removed magnetite and pyrrhotite; later poles with strong current removed a wolframite

Table 9. Mineralogical analysis of products of a Wetherill-Rowand separator at the Franklin mill, New Jersey Zinc Co.

Mineral	Products										
	Feed	First magnet			Second magnet				Third magnet		Tailing
		First pole	Second pole		First pole		Second pole		First pole	Second pole	
			Inside	Outside	Inside	Outside	Inside	Outside			
Magnetite	2.4	47.1	.....	0.1	.....	.....	.....	.....	.....	.....	.....
Franklinite	28.6	42.3	60.2	81.0	26.7	80.9	29.9	63.2	50.4	26.2	2.9
Spinel	0.5	.....	0.6	0.1	1.0	0.1	2.6	1.0	0.5	.....	.....
Rhodonite	9.3	.....	3.4	1.1	8.9	2.6	12.8	6.3	8.0	7.4	2.6
Rhodochrosite	1.8	0.3	0.7	0.2	5.3	0.5	6.0	2.2	6.0	4.6	1.4
Garnet	3.5	.....	0.1	0.1	3.4	0.2	9.4	3.0	12.4	22.5	3.7
Micas	1.9	.....	.....	.....	1.5	.....	2.4	.....	0.5	0.6	1.4
Chlorite	0.1	.....	.....	.....	0.3	.....	.....	.....	.....	.....	.....
Tremolite	.....	.....	0.2	.....	.....	.....	.....	.....	.....	.....	.....
Zincite	0.5	.....	0.2	.....	0.2	.....	.....	0.2	.....	1.8	4.4
Willemite	9.1	.....	0.1	.....	0.3	0.1	0.2	0.2	0.3	2.9	27.8
Calcite	27.7	0.1	3.0	0.5	6.7	0.2	4.8	2.6	6.6	12.7	48.6
Sulphide, slate	.....	.....	.....	.....	.....	.....	0.3	.....	.....	.....	0.6
Quartz	.....	.....	.....	.....	.....	0.2	.....	.....	0.4	0.1	2.1
Middling	14.0	10.2	31.5	16.9	34.6	15.0	31.6	21.4	15.1	21.3	4.4

concentrate assaying 73% WO_3, 0.7% Sn, and a trace of Bi; nonmagnetic product contained 63% Sn, 4% Bi, and upward of 2% WO_3, depending on the amount of scheelite (nonmagnetic) present. Recoveries were about 97% WO_3 and 99% Sn.

At AIN BARBAR, Algeria (*351 RIM 373*), ore consisting of chalcopyrite, ferruginous blende, galena, quartz, and calcite, crushed through 3-mm. and roasted to increase permeability of chalcopyrite, was separated into six size fractions down to 80-m. Each fraction was treated on a 4-pole Wetherill drawing 35 amp. at 60 v. First pole removed all pyrite and some chalcopyrite, second pole most of chalcopyrite containing some blende, third pole mixed products including some chalcopyrite, fourth pole a mixture containing everything except pyrite and a tailing of blende, galena, and gangue. Middlings were reground, reroasted, and again separated magnetically. Copper concentrate assayed 18% Cu and represented a recovery of 82%; zinc concentrate 40% Zn with an 87% recovery.

At the TROUT mill, ore containing 30 to 35% Mn and 25 to 30% SiO_2 (Philipsburg ore) is roll crushed, and screened into 6~14-m. and <14-m. fractions. Each fraction goes to a separator with three magnets wound respectively with 30,000, 60,000 and 100,000 ampere-turns. Concentrate assays 70% MnO_2, 0.2% P, 6% Fe, and about 10% SiO_2. At EAST POOL AND AGAR, LTD., Cornwall (*2 MQE 341*), gravity concentrates from an ore containing cassiterite, wolframite, arsenopyrite, and chalcopyrite, finely disseminated in a siliceous gangue, were roasted to remove arsenic, increase permeability of iron minerals, and dry the feed for magnetic concentration. The four-pole separators used had 15-in. × 8-ft. feed belts run at 73.7 f.p.m.; cross belts were 2.5 in. wide, magnets were energized by a 4 1/2-kw. motor generator. Four products were made, an iron concentrate containing 5 to 10% Sn, a tinny iron, a tinny wolfram, and a sale-tin concentrate. At the Mill City plants of NEVADA-MASSACHUSETTS Co. (*112 A 833*), ore containing scheelite disseminated in a gangue of garnet, quartz, epidote, calcite, and pyrite is concentrated by gravity methods, followed by flotation to give a concentrate containing 50% scheelite, with pyrite, garnet, and tramp iron. The dried concentrate is passed through a six-pole separator; the magnets are wound for 30,000, 60,000, and 100,000 ampere-turns and draw 1.4, 11.4, and 21.4 amp. at 120 v. Tramp iron is removed at the first pole, altered pyrite at the second and third poles, and the bulk of the garnet at the remaining poles. The nonmagnetic concentrate is given a magnetizing roast and is passed through a second six-pole separator, similarly wound but drawing 3.5, 11.4, and 21.4 amp. at 120 v. Pyrrhotite is removed at the first pole, the remaining poles remove a middling of iron minerals, garnet, and scheelite for retreatment. The nonmagnetic concentrate is again roasted and passed through a Dings M-2 separator, resulting in a product assaying 73.6% WO_3, 20.6% CaO, 2.3% SiO_2, 1.3% Fe, 1.2% Al_2O_3, 0.3% MnO, 0.3% Mo, 0.4% S, and P and As <0.02%. At MOORLIGHT, pyrolusite and psilomelane are separated from dolomite, limestone, and quartz by 3 @ 6-pole separators, two of which are fed 10~20-m. material and the other 20~48-m. Speed of

feed belt, 75 f.p.m.; take-off belt, 300 f.p.m. Feed contains 1.5% moisture and assays 47% MnO_2; tailing, middling, and concentrate assay 15, 60, and 71% MnO_2, respectively.

At SAKIET-SIDI-YOUSSEF, Algeria (*97 J 899*), a modification of the Wetherill machine (Fig. 36) was used to treat roasted blende-pyrite concentrate, assaying about 30% Zn before roasting. Belt *a* (14-in.) traveling at 175 f.p.m. carried the feed stream between two sets of powerful primary electromagnets *b* and *c*, with wedge-shaped pole-pieces, the upper pole of *b* and both poles of *c* being enclosed in metallic drums. The first magnet drew 7 to 9 amp. at 40 v. and the second 10 to 12 amp. at the same voltage. Magnetic material drawn up against the first drum was thrown onto cross belt *d* and thence discharged. At the second magnet, magnetic material clung to the upper drum until it reached a weaker part of the field, where it left under the combined action of gravity and momentum. Adjustable knife edges divided discharge into three products. Two sizes were treated on separate machines, *viz.*: 3~1-mm. and <1-mm. Each separator made four products: (*1*) highly magnetic iron product assaying 17 to 18% Zn, (*2*) a less highly magnetic iron product carrying 19 to 20% Zn, (*3*) a zinc-iron middling assaying 27 to 28% Zn, and (*4*) blende concentrate, 42% Zn. The last two products were mixed to yield a salable product assaying about 40% Zn and represented about 90% of the zinc in the original feed. ROASTING was done in a 5-hearth McDougall-type furnace, and cooling in a multitube rotary cooler, each tube individually water-jacketed; tubes were about 2.75 in. diam.; slope, 7%; 8 r.p.m.

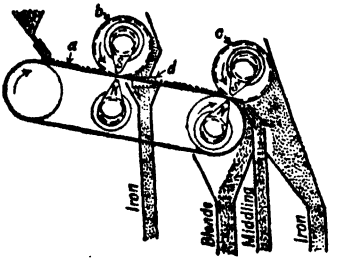

FIG. 36. Wetherill-Mechernich separator.

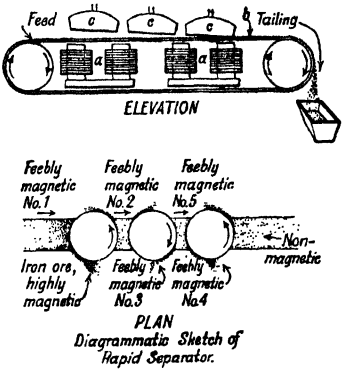

FIG. 37. Rapid separator.

Rapid separator (Fig. 37) is another high-intensity machine in which powerful fields are induced in sharp-edged secondary poles overhanging the flat-pole primary magnets *a* placed below the upper run of an endless-belt conveyor *b*. The secondary magnets are saucer-shaped rotating disks *c*, with diameter several inches greater than the width of the belt. Any given point on a disk, when over the belt, is also over the pole-piece of a magnet and therefore becomes magnetized and lifts magnetic material from the belt. As the disk revolves, this point travels to one side, induced magnetism is lessened, finally passes through zero in reversing polarity, and its load of magnetic material is discharged under the combined influence of gravity and centrifugal force. By tilting the axes of the disk shafts as shown, the effective strength of the secondary magnetic fields may be varied with the result that successively less-magnetic products are discharged as indicated in the figure.

This machine is supplied with 2, 3, or 4 poles and respectively with 1 or 2, 2 or 3, and 3 separating disks. Where the number of disks equals the number of poles, the first disk, acting as a rougher, operates over only one pole. Belt widths range from 10- to 15-in., speeds from 50 to 200 f.p.m. Power required for magnet excitation ranges from 726 to 1,320 watts, for mechanical driving from 1/2 to 3 1/2 hp. Capacity may be estimated from belt speed and size of feed.

Performance. At STOREY'S CREEK, Australia (*18 MM 266*), a wolfram-tin separation was made. The feed contained 50 to 66% WO_3, magnetic concentrate assayed 70 to 74% WO_3, and nonmagnetic product 65 to 68% Sn. Capacity of separator was 1.5 t.p.h. Another wolfram-tin separation at a mill in Tasmania (manufacturer's catalogue) was made on a feed containing 73% wolfram, 20% cassiterite, and 7% silica and iron pyrites. The wolfram product assayed 73% tungstic acid and 0.7% Sn; the tin product 66.5% Sn and 0.6% tungstic acid. These assays are averages taken over an 8-mo. period. A sphalerite-siderite separation is also reported; a feed of 38.9% Zn giving a zinc concentrate of 48.3% Zn and a siderite product containing 1.4% Zn.

In another machine of this type, the keeper with flat poles is placed below the upper run of the belt and the electromagnet above the belt. The collecting surface is a rotating ring whose cross-section shows a broad, flat surface adjacent to the primary poles, while the sides form a parabolic curve ending in a highly peaked vertex. In a third machine the collecting disk is milled with three sharp edges instead of one.

Rapidity separator (Fig. 38) is a recent modification wherein the rotating bridge disk *a* operates over two feed belts *b* moving in opposite directions. Discharge of magnetic material takes place in the space between the belts. Disks are operated at peripheral speeds slightly higher than the belt speed, and since the collecting edge does not travel across the belt, as in the Rapid separator, higher disk speeds and consequently higher belt speeds may be used. The time spent by a magnetic particle in the magnetic field, for constant belt speeds, is longer in the Rapidity model. The magnetic area is shaded in Fig. 38.

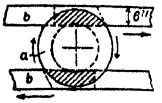

FIG. 38. Diagram of Rapidity separator.

Machine is available with two poles, one disk, two 6-in. belts, requiring 850 watts. Belt speeds ranging from 80 to 150 f.p.m. for monazite sands, 150 to 378 f.p.m. for ilmenite from black sands, and 100 to 200 f.p.m. for garnet are reported. At COCKS ELDORADO dredge, Victoria (*29 CEMR 186*) (see also Sec. 2, Fig. 149), the gravity concentrate of an ore containing gold and tin is treated in an amalgamating barrel to remove gold; the residue is concentrated by tabling and the dried concentrate assaying 0.5% Sn is passed through a Rapidity separator energized by a 3 kw. 110-v. motor-generator set. A magnetic residue containing 0.35% Sn and a tin concentrate of 71% Sn are made with a ratio of concentration of about 4 : 1. A capacity of 2 1/2 to 3 tons per 8-hr. shift is reported.

Tray-type separator (Fig. 39) is a low-intensity machine for treating highly magnetic materials. The essential parts are the two fixed primary electromagnets *a* with pole-pieces *b* suspended above the feed tray or belt and shaped as circular arcs with chords equal to the tray width. Cast-aluminum, brass, or bronze circular plates *c* about 26-in. diam., carried on gear-driven inclined shafts *d*, carry on their periphery Y-shaped laminated-steel segments *e* 1 to 2 in. long and spaced a similar distance edge to edge. The upper part of these segments closely engages the arc-shaped poles of the primary magnets while the lower ends barely clear the bed of feed in the shaking tray *f*. A steel bed-plate *g* underlies the tray. The magnetic circuit is substantially that indicated by the dotted lines *h* passing through core *a*, pole-pieces *b*, segments *e*, air gaps between *b* and *e* and between *e* and *g*, and completed through bed-plate *g*. The segments at any given time above the tray are, therefore, magnets, and lift magnetic material from the mass on the tray. As plate *c* revolves, any given segment passes out of the field of a given pole as it approaches the edge of the tray or belt and as it does so it loses its induced magnetism more and more until it reaches the diameter perpendicular to the tray axis when its magnetic flux becomes zero. Further revolution causes it to approach the opposite pole of the primary magnet where induced magnetism of opposite polarity is effected. As a segment carrying magnetic material leaves a primary pole, the least-magnetic material is dropped out, owing to the decreasing strength of field, and at the neutral point the most highly magnetic material is dropped. Since the diameter of the segment circle is 8 in. greater than the width of the tray, the magnetic concentrate drops clear of the tray into chutes *i* provided to receive it. The second magnet usually has more ampere-turns than the first, thus allowing it to pick up the magnetic material that the first passed, and the air gap of the second is adjusted to a smaller distance than the first. This adjustment is effected by changing the length of the tray-suspension rods *j*, by means of hand wheels *k*. Thus concentrate is delivered into hopper i_1, middling into hopper i_2, and tailing from the lower end of the tray.

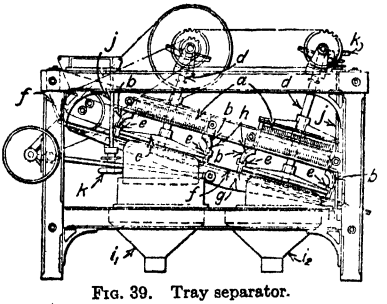

FIG. 39. Tray separator.

In another form of the same machine, the shaking tray is replaced by a rubber conveyor belt. The tray type is superior where hot roasted ores are being handled or where agitation of the feed is necessary to prevent entrainment of low-grade material in the concentrate; the belt is quieter and gives less trouble mechanically.

The standard width of belt or tray is 18 in. The tray is vibrated 450 to 500 s.p.m. and slopes about 4 i.p.f.; the belt is horizontal and runs between 50 and 100 f.p.m. CURRENT drawn is about 2 amp. on the first magnet and 3 on the second. CAPACITY on roasted zinc-iron concentrate passing 3/16-in. screen is about 1 to 2.5 t.p.h.

Performance. Roasted zinc-iron concentrate was treated in Wisconsin (*107 J 1110*) by passing it over two machines in series, the first a 2-disk shaking-tray rougher, and the second a 1-disk belt-type finisher. Shaking tray was made of maple with 1/4-in. pressed-asbestos liner, sloped 4 i.p.f. and vibrated 450 s.p.m. Magnets over first rougher disk drew 2 amp. at 225 v. when heated to 100° F.;

over second disk, 3 amp. at the same temperature. Tips of secondary poles were spaced 3/8 to 1/2 in. above the top of the tray liner. Finisher had two 12-in. feed belts running at 70 f.p.m. and discharging at the center of the machine under an armature of solid steel 24 in. diam. and 6 in. thick, revolving on a vertical shaft. Primary-magnet poles were 3/4 to 7/8 in. below the lower face of the revolving armature. These magnets had 6-in. cores and carried a current ranging from 9 amp. minimum cold and 7.5 amp. hot to 19 and 15 amp. maximum respectively. Capacity of the two machines was 40 to 45 t.p.d. Cost of roasting and separating (1919) was $1.28 per ton, excluding overhead.

Gröndal drum-type wet magnetic separator (Fig. 40) consists essentially of the ordinary drum-type separator *a*, 16- to 24-in. diam. and 17- to 67-in. face, with alternating-pole magnets, mounted above a spitzkasten *b* in such a way that the lower face of the drum just touches or just fails to touch the water surface. Magnets are made adjustable in angular position and the drum as a whole is adjustable vertically and horizontally. Feed is kept in suspension by rising water currents, and all solid matter is forced to flow through the effective part of the magnetic field by means of properly disposed baffles *c*. Sand tailing sinks to the bottom of the spitzkasten and is drawn off through appropriate ports; slime overflows with excess water as shown; concentrate adheres to the drum surface until it has been lifted sufficiently to be discharged over the side of the spitzkasten. At this point the bank of magnets ends and concentrate is washed off by a spray into a concentrate launder. When two drums are run in series, a strong current is carried in the first to lift all magnetic material as a rough concentrate for retreatment on the second machine which, in turn, produces finished concentrate and a middling for regrinding, retreatment, or discard as tailing, according to the exigencies of the problem.

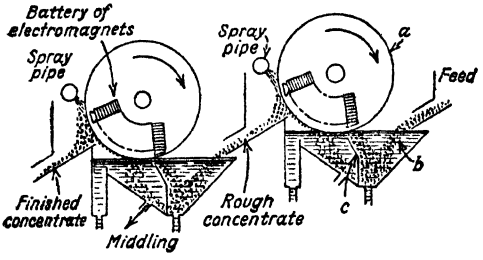

FIG. 40. Gröndal drum-type wet magnetic separator.

In another form of this separator used in Europe, the drum surface is composed of alternating radial strips of nonmagnetic material and iron. The primary magnet has a pointed pole-piece directed vertically downward and mounted directly above the baffle in the spitzkasten. Hence the induced magnetism in the iron strips is greatest when the strips are submerged and decreases as they emerge, becoming sufficiently small by the time they reach the horizontal diameter of the drum to permit concentrate to be washed off.

Usual drum SPEED is from 30 to 35 r.p.m. Suitable FEED SIZES range from 8-m. to 100-m. CAPACITY on magnetite ores is from 2 to 4 tons per ft. of width of drum face per hr. CURRENT requirement is from 6 to 24 amp. at 110 v., and from 1/2 to 1 1/2 hp. is required to drive the drums. Water consumption is about 10 g.p.m. per ft. of drum width.

Use. Primarily for concentrating <14-m. magnetite ore. DISADVANTAGE is that magnetic particles must be pulled through the air-water interface.

Performance. At BENSON MINES, N. Y., two machines were run in series, the second taking rough concentrate from the first; tailing from both was sent to waste. Two such pairs handled 700 to 750 t.p.d. of 20-m. feed assaying 30% Fe and about 0.35% P, but the machines were somewhat overloaded and a third pair was installed. Titanium in the feed ran 3.5% and in the concentrate, 1%. Table 10 gives sizing-assay test of concentrate. Tailing assayed about 8.5% Fe, not all magnetic. HANOVER BESSEMER IRON AND COPPER CO., Fierro, N. M., treated 400 t.p.d. of 30-m. feed assaying 48% Fe, 0.6% Cu, and 0.02% P on three sets of two Gröndal machines in series. Concentrate assayed 60% Fe, 0.2% Cu, and 0.007% P. At BETHLEHEM STEEL CO., Lebanon, Pa., the ore consists of magnetite, pyrite, and chalcopyrite in talc and ferromagnesian silicates; assay, 43% Fe, 1.8% S, and 0.4% Cu. 3,000 t.p.d. crushed to 30-m. went to 20 Gröndal machines in sets of two in series. Concentrate assayed 60% Fe, 0.9% S, and 0.2% Cu. Sintering reduced S to less than 0.1%. At SHOWA STEEL WORKS, South Manchuria (*Bul 125 USBM 275*) the ore, consisting of magnetic and nonmagnetic oxides of iron finely disseminated throughout a silicate rock, is first roasted to increase permeability, then after crushing to <150-m., is concentrated on Gröndal machines. A concentrate assaying 58 to 60% Fe and a tailing of 10 to 14% Fe are made from the furnace product, which assays 38.5% Fe and 15% FeO.

Table 10. Sizing-assay test of concentrate of Gröndal separators, Benson Mines Co., N. Y.

Screen, mm.	Weight, per cent.	Assays, per cent.	
		Iron	Phosphorus
0.833	3.0	47.65	0.060
0.589	11.2	53.72	0.057
0.417	20.8	57.48	0.055
0.295	15.5	60.18	0.056
0.208	16.0	60.86	0.051
0.147	9.0	61.04	0.049
0.104	9.2	61.76	0.044
0.074	3.8	62.10	0.045
−0.074	11.5	62.88	0.042

Steffensen separator (Fig. 41) is similar to the Gröndal separator but differs in that the drum is submerged; hence magnetic material is not pulled through the air-water interface. Feed is introduced into the bottom of the feed box through conduit *A;* water entering through pipe *B* under sufficient head suspends and carries solids upward toward the rotating drum *C*. Magnetic material attracted to the drum surface and carried upward by rotation is cleaned by the winnowing action caused by the alternate polarity of the pole pieces and by the countercurrent washing of water admitted through openings *D*. When out of the magnetic field, concentrate is discharged with the aid of spray *E*. Tailing discharges over weir *F*.

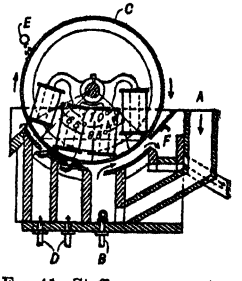

FIG. 41. Steffensen separator.

The drum is 30 in. diameter, 40 in. long, and has an active magnet width of 36 in. A smaller machine having drums of the same diameter but only 22 in. wide is also made. Power required for driving ranges from 1/2 to 1 hp. per drum; for magnet activation, maximum power required is 2,000 watts.

Performance. At the Lebanon plant of BETHLEHEM STEEL CO. each separator unit consists of three drums in series. The first drum makes finished tailing and a concentrate which is retreated in series by the second and third drums. Finished concentrate discharges at 60 to 75% solids. The second and third drums operate at reduced field strength. Density of feed to the unit is not critical and may range from 20 to 60% solids. Treating Cornwall ore, from which pyrite and chalcopyrite as well as iron are recovered, each 3-drum unit has a capacity of about 350 to 400 t.p.d. Finished concentrate, at 48 *mog*, assays between 60 and 62% Fe; final plant tailing, 0.25% Fe; feed, 43% Fe, of which 38 to 40% is magnetic iron. At 200 *mog*, P. L. Steffensen (*PC*) reports finished concentrates assaying 66% Fe. Sintering difficulties necessitate the coarser grind. In all cases separator capacities are materially reduced by slimes.

Ullrich separator (Fig. 42). The essential parts are one or more concentric rings of wedge-shaped pieces of soft iron *e* carried depending from a revolving table *d;* powerful fixed magnets *a*, radially disposed, with windings *b* and flat pole-pieces *c* for energizing the suspended wedge pieces by induction; feed devices *k* that lead the feed in a thin uniform stream between the primary and secondary poles; suitably disposed receiving spouts *l* and *m*, alternating with the fixed primary-magnet poles, for magnetic material, and a common central hopper *n* for tailing. As the wedges come over a pole and feed chute in the course of their revolution a strong magnetic field converging on the wedge is formed and magnetic material is drawn from the feed sole to the induced pole. On passing to the next radially disposed pole, which is of opposite polarity, the induced magnetism reverses sign and magnetic material is dropped or removed by a scraper. By varying the air gap between successive rings of secondary poles and the poles of the primary magnet from a maximum at the outer ring to a minimum at the inner, fields of increasing intensity are traversed by the radial feed streams, thus permitting the production of several classes of product in a very small space. The separator is made for either dry or wet service. In dry service the feed channels are shaking trays or traveling belts about 6 to 8 in. wide; in wet, they are shallow launders. In wet work the revolving table *d* is filled with water and discharges through pipes to form water sheaths around the wedges. These sheaths are continuous with the liquid in the feed launder (by reason of the small pole distance and the high surface tension of water) so that the movement of magnetic material to the poles is made under water.

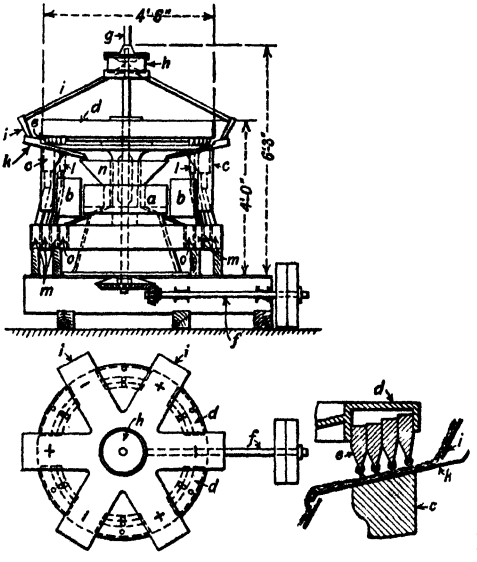

FIG. 42. Ullrich separator.

Performance. Kranafeldt, writing as the distributors' representative (*34 CMJ 705*), stated that the capacity on strongly magnetic material at 2-in. size is 7 t.p.h. while with fine material of the same character 4 t.p.h. can be treated. Capacity on feebly magnetic material passing a 3/8-in. screen is said

Table 11. Performances of Ullrich separators

Kind of ore	Assays, per cent.														Recovery, per cent.			
	Feed					Magnetic product					Nonmagnetic product							
	Fe	Mn	Zn	Cu	P	Ins.	Fe	Mn	Zn	Cu	P	Ins.	Zn	Cu	Fe	Mn	Zn	Cu
Blende-siderite	15.9	3.8	27.8	....	....	....	30.1	8.2	2.5	....	....	....	49	....	....	75.2	92	....
Blende-siderite	....	....	22.0	....	....	....	....	....	....	....	....	....	40.6	....	....	....	98.8	....
Blende-siderite	....	....	33.1	....	....	....	....	....	....	....	....	....	52.9	....	....	....	97.5	....
Blende-siderite	....	....	38.9	....	....	....	....	....	....	....	....	....	55.9	....	....	....	92.8	....
Chalcopyrite-siderite	38.9	....	....	1.01	....	....	39.8	....	....	0.13	....	....	....	3.97	68	....	....	88
Magnetite-hematite	37.3	....	....	....	0.238	....	65.32	....	....	....	0.0255	....	....	....	80	....	....	....
Swedish hematite	34.6	8.9	....	....	0.349	33	48.3	11.1	....	....	0.0276	12	....	....	79.1	70.9	....	....
Bohemian hematite	56.5	....	....	....	....	....	68.6	....	....	....	....	....	....	....	93.3	....	....	....
Roasted siderite	37.2	6.9	....	....	....	....	48.1	8.5	....	....	....	....	....	....	93.5	89.5	....	....
Swedish magnetite	34.6	....	....	....	0.329	....	51.6	8.5	....	....	0.021	....	....	....	88.5	....	....	....
Swedish magnetite-hematite	50.2	....	....	....	0.106	....	61.6	....	....	....	0.029	....	....	....	86.4	....	....	....
Italian magnetite	54.5	....	....	....	....	....	65	....	....	....	....	....	....	....	90	....	....	....

to be 0.5 to 3 t.p.h. The data on performance in Table 11 are from the same source.

Wet machines, treating blende-siderite ore in SARDINIA (*100 J 911*), were fed 7~4-, 4~2-, and <2-mm. material, each size on a separate machine. Feed pulp contained about 20% solids. Combined capacity of the three separators was 2.5 to 3 t.p.h. Power, 1.5 hp. for driving and 10 amp. at 125 v. for excitation of each machine. Assays: Feed, 34% Zn and 38% Fe; concentrate, 53% Zn and 5% Fe; tailing, 2.5% Zn and 48% Fe. Recovery 96% Zn; 90% of siderite eliminated.

Crockett submerged-belt separator (Fig. 43) consists essentially of a battery of flat magnets, arranged side by side so that their pole-pieces lie in an arc *A*, dipping into pulp in a multihoppered tank. A belt *B* is so supported as to intervene between the pole-pieces and the pulp; it is driven at an average speed of 200 f.p.m. in the direction shown. Clear water drawn into the space between the belt and the pole-pieces at *M* by a frictional pumping action discharges along the sides of the belt throughout its submerged run, thus excluding grit. The magnet battery, consisting of 20 electromagnets spaced about 4 1/2 in. c. to c. and having succeeding poles of opposite polarity, is enclosed, except for the pole-pieces, in a nonmagnetic stainless steel or copper housing, made waterproof by welding. Magnets are energized by direct current; the sections over the feed chute *C*, tailing hopper *D*, and middling hopper *E* are designed to give progressively weaker fields, rheostat control being provided for the last-named section. The catenary shape of the magnet bank insures close contact of the endless take-off belt therewith. Feed tray *C*, inclined 10 or 15° from the horizontal, may be adjusted to increase or decrease distance from magnet according to the size of the feed. Tailing and middling hoppers are equipped with baffles *F* to prevent water from flowing with the belt. A series of underwater sprays *G* is directed toward the belt. Ore pulp, introduced through feed box *H*, flows down the feed tray where it comes within the relatively strong field of the first magnet section. The magnetic portion is lifted and held against belt *B*, which carries it forward. The winnowing action due to the alternating polarity, the weaker magnetic field over the tailing hopper, and the underwater sprays act jointly to free entrained gangue particles in the tailing section; these factors act similarly to drop middling when the material on the belt is over the middling section. Thereafter magnetic material is carried over a shallow tray *I* which is partly filled at normal operating pulp levels; two unsubmerged sprays located here are operated at sufficient pressure to wash material held against the belt; the major portion of the dislodged material, running down toward the middling hopper *E*, is picked up again before entrance thereto. Finally magnetic material is carried forward

over a dewatering tank *J* and then out of the magnetic field and is discharged into concentrate hopper *K*. Rheostat control of magnets over the middling section is used to control grade of concentrate. Water level, adjusted by means of overflow weirs *L*, is always kept above the active zones of the separator; it is highest at the concentrate end of the separator. Slimes overflow weirs *L*.

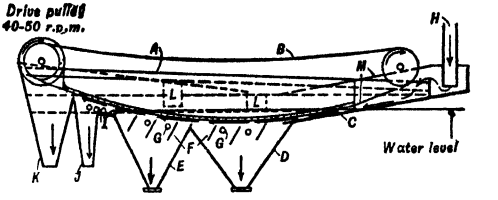

FIG. 43. Crockett submerged-belt separator.

Table 12 gives manufacturer's data on various mill sizes. Capacity figures vary greatly with size of feed and concentration ratio. Belt speeds average 200 f.p.m. Water content of feed may range through wide limits; average figures are 66% water for fairly coarse ore and 80% for extremely fine feeds, *e.g.*, 100-m. A variant of the machine described has been designed to clean ferrosilicon medium used in sink-float processes; it differs in that the middling hopper is eliminated and the magnet battery slopes upward more toward the concentrate end, to promote cleaning and dewatering. The ferrosilicon machine is made with magnet widths of 12, 24, and 36 in., requiring 600, 1,200, and 1,800 watts, and has capacities of 6, 14, and 22 t.p.h. respectively.

Table 12. Manufacturer's data on Crockett separator

Magnet width, in.	Belt width, in.	Capacity, tons ore per hr.	Watts, d-c.	Hp.	Water, g.p.m.
6	8	1/2	500	1	5
12	18	4 to 18	1,200	2 & 3	15 to 45
24	30	9 to 38	2,400	3	30 to 75
36	42	14 to 55	3,600	5	45 to 110
48	54	20 to 80	4,800	5 & 7 1/2	60 to 150

Use is primarily in low-intensity wet separation of unsized permeable ore at maximum size of about 4-m. The machine can be used to make two finished products and a middling for retreatment. Its most important applications to date are in the concentration of magnetite ores and in the cleaning of ferrosilicon medium.

Performance. At SCRUB OAKS, Crockett machines are used to separate magnetite from a siliceous gangue. Magnets are 36 in. wide, take 2 1/2 hp. for excitation and 1 hp. for driving. Belt speed is 200 f.p.m. Distance of feed tray from battery magnet, 3/4 in. Attendance required is 12 machines per man. Table 13 gives performance data.

Table 13. Performance of Crockett submerged-belt separators at Scrub Oaks

Separator number	1	2	3	4
Capacity, tons solid per 24 hr.	1,200	600	500	600
Size of feed, mesh	<8	<48	<65	<60
Water in feed, %	60	70	70	75
Assays, % magnetic Fe				
Feed	55.4	27.7	39.2	60.6
Tailing	0.40	0.25	0.39	0.34
Middling	19.5	0.4	5.0	1.2
Concentrate	67.5	68.4	65.4	71.5
Ultimate recovery	99.6	99.4	98.1	99.4

At the Tahawus plant of NATIONAL LEAD Co. 8 @ 48-in. Crockett separators are used as roughers and 4 @ 48-in. as cleaners, with no intermediate regrinding. Results are shown in Table 13*a*. R. E. Crockett (*PC*) estimates a magnetic iron content of 0.75% for the combined tailings and middlings, which, if correct, indicates a recovery of over 99%.

Linney belt separator (Fig. 44) is a pick-up type wet-belt machine, generally similar to the Crockett, but with curved magnet battery *A* on a relatively steep slope, and with different feed and washing arrangements. Feed enters box *B*, is distributed across the underside of belt *C* by box *D*, aided by pressure water, and overflows into shallow tray *E*, down which it flows in a thin stream in close proximity to but not in contact with the belt. The overlying magnet section *F* has a relatively strong magnetic field. Magnetic material is drawn up to the belt through the air-water interface, and is carried up-slope, past the entry point of the feed, to a middling section *G*, of somewhat lower field strength. Here it is sprayed with water from pipes *H*, located opposite the pole-pieces, and drops out middling and entrained gangue, which discharges into a separate tray *I*; that which escapes recapture in flowing

Table 13*a*. Performance of Crockett submerged-belt separators at Tahawus

	Rougher					Cleaner concentrate
	Feed *b*	Concentrate	Middling	Sand tailing	Slime tailing	
Dry feed, t.p.d. *a*	3,400	1,700	.....	1,400	300	1,600
Solids, %	40.0	.....	10.0	45.0	8.0	.....
TiO_2, %	16.5	10.5	25.0	23.0	18.0	10.0
Fe, %	35.0	56.5	26.0	20.0	16.0	58.4
Magnetic Fe, % *d*	.....	95.1	0.35	0.90	.....	98.9
Screen analysis, mesh:						
>28	.....	7.2 *c*	.....	.....	.....	8.5 *c*
35	20.3 *c*	21.0	7.0 *c*	17.8 *c*	.....	23.0
48	35.3	36.5	13.2	33.6	.....	39.2
65	49.7	52.1	20.3	48.5	.....	55.1
100	63.0	64.3	31.4	63.4	7.1 *c*	67.7
150	72.1	78.1	44.8	74.7	11.8	76.1
200	78.5	82.2	59.1	85.6	19.8	83.5
<200	21.5	17.8	40.9	14.4	80.2	16.5

a Long tons.
b Exclusive of middling.
c Cumulative per cent. retained.
d By Davis tube (Sec. 19, Fig. 153).

down the tray discharges through opening *J*. Concentrate is similarly reworked under field *K;* middling is dropped through slot *L*, and final concentrate is dropped at *M*. Magnets are wired in groups to give four sections of controllable field intensity.

At REPUBLIC STEEL CORP., Port Henry, N. Y., belts are 54 in. wide with 20 @ 48-in. magnets. They are inclined about 35° to reduce carriage of dirty water from the lower to the higher sections. Belt speed is 225 f.p.m. Spray pipes use about 75 g.p.m. CAPACITY depends on size and magnetic content of feed; R. J. Linney (*PC*) quotes average figures at 75 t.p.h. for an iron ore containing 50% magnetic Fe, and 100 t.p.h. for 35% magnetic Fe content. POWER for driving is 5 hp. Concentrate averages 69.5% magnetic Fe and tailing 2%.

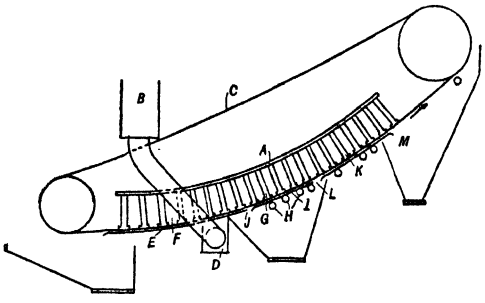

FIG. 44. Linney belt separator.

Dry *vs.* wet magnetic separation. The size at which separation is contemplated and the permeability of the material are the principal factors in determining whether dry or wet separation shall be used. Existing wet separators are limited to a maximum feed size of about $^1/_4$- or $^1/_8$-in., hence if magnetic separation at a coarser size is desirable, as is usually the case when finished tailing or finished concentrate can be made at such sizes, dry separators are used. For this purpose the so-called COBBERS or ROCK-PICKERS are best, with strong fields and special gap distances chosen according to the size of ore treated. For separations at sizes less than $^1/_4$- or $^1/_8$-in. the determining factor is permeability; for weakly magnetic materials a high-intensity machine is required and, since no high-intensity wet separator is available, dry separation is practiced; for strongly magnetic materials current practice favors wet separation, although dry separation is practiced in some older mills.

The principal ADVANTAGES of wet separators over dry in treatment of fine materials are: (1) Feed to wet separators need not be sized, whereas close sizing is required for dry separation. (2) Feed to dry separators must be thoroughly dry to permit freedom of movement between the particles on the feed sole; if excessive dusting results or if fine gangue particles adhere to the surfaces of magnetic particles, *e.g.*, apatite on magnetite, thorough washing is also required to avoid production of a low-grade concentrate. (3) State health laws regarding silicosis may necessitate air conditioning if dry separation is used.

Wet separators, in addition to the difference implied by their classification as of the holding or pick-up type, differ according to whether the tailing or concentrate or both pass through the gas-liquid interface. Passage therethrough requires that a force of approximately $0.226D$ grams (D = diameter of particle) be exerted to overcome the interfacial tension; for a 10~14-m. particle this force amounts to 0.032 gm., and for 150~200-m., 0.0020 gm. The ratio of this force to the gravitational force is $0.006/D^3\rho$, where ρ = density, hence the crossing of the gas-liquid interface becomes a matter of increasing importance as the size of the material decreases, and may actually become of the same order of magnitude as the separating force, when pick-up may be prevented.

6. ROASTING TO MAGNETIZE

Roasting is practiced in the case of many iron-bearing products in order to convert the iron-bearing mineral into a magnetic state. Fe_3O_4, *gamma* Fe_2O_3, and Fe_7S_8 are highly magnetic compounds of iron, whereas Fe_2O_3 (hematite), $2Fe_2O_3 \cdot 3H_2O$ (limonite), $FeCO_3$ (siderite), and FeS_2 (pyrite) are feebly magnetic or nonmagnetic. These latter may, however, be converted to the magnetic state by proper roasting. Chalcopyrite, bornite, and other complex sulphides containing iron are similarly rendered magnetic.

Hematite is changed to Fe_3O_4 by abstraction of oxygen at temperatures ranging between 370° and 600° C., the lower limit being set by the time allowed for reduction, the upper limit by the necessity for preventing incipient fusion. Change can be effected by strong heating in air, less heat in a reducing atmosphere, and a still lower heat when there is intimate admixture of a reducing substance such as hydrogen or carbon. Reducing roasting has had some commercial application in Europe, and much experimentation therewith has been done. Theoretically only about 1% by weight of carbon or equivalent fuel would be necessary to effect the conversion of pure Fe_2O_3, if there were no heat losses, but the Minnesota School of Mines Experiment Station has determined that on a typical low-grade hematite ore from 5 to 10% by weight is necessary. Their conclusions as to operating conditions follow: (1) For efficient and rapid roasting the temperature should exceed 400° C. (2) Comparatively small increases in temperature effect considerable increases in efficiency. (3) Efficiency generally increases with increase in duration of roast. (4) Efficiency increases with decrease in size of particles, but this factor is less important than temperature and duration. (5) Simple heating in air produces little change in magnetic character. (6) The reducing agent should contain as little methane as possible, as this gas has low efficiency.

Siderite is converted to the magnetic oxide by calcining with restricted access of air at 700 to 800° C. Over-roasting produces the feebly magnetic ferric oxide, Fe_2O_3.

Pyrite may be converted by roasting either to Fe_7S_8 or to Fe_3O_4, both of which are highly magnetic, according to the character of the roast. When heated in the presence of air, pyrite (and marcasite) decrepitate at 60° C., and as the temperature is raised lose sulphur more and more rapidly until at about 400° C. the magnetic sulphide, Fe_7S_8, is formed, the sulphur igniting and passing off as SO_2 gas. If the period of subjection to heat is short (FLASH ROASTING), only the surface of the pyrite is altered, and Fe_7S_8 is formed, but this surface shell of magnetic material is sufficient to cause the particles to be lifted by the magnet in a field of high intensity. Further roasting at 500 to 600° C. with limited air and an atmosphere of CO, H, and SO_2 results in conversion to the highly magnetic Fe_3O_4, more or less complete according to the duration of the roast and the size of the particles. Roasting to form the magnetic sulphide is hard to control; some of the more strongly magnetic oxide is sure to form, especially from the smaller particles, while the larger particles contain mixtures of the original material and the various possible products. The product is, therefore, difficult to separate on account of the varying permeability of the constituents, and for this reason it is frequently better to carry the roast to magnetic oxide. Over-roasting, especially if accompanied by access of air, causes conversion of Fe_3O_4 to the feebly magnetic Fe_2O_3. Where conversion must be closely regulated the ore must be closely sized before roasting and, if complete conversion to oxide is desired, it should be ground to <2-mm. On the other hand, if the feed is too fine, it is difficult to obtain proper exposure to the furnace gases, with the result that roasting is again uneven.

Furnaces. Several types of furnaces have been used in magnetic roasting; they are of the rotary-tube, multiple-hearth, shaft, and turbulence types. Capacity of a 6- or 7-hearth, 22-ft. furnace in this service is 100 to 125 t.p.d. on <3/8-in. material; of a shaft type with a 4-ft. heating zone 6 ft. in diameter, about 200 t.p.d. on <3/4-in. material.

Reducing agents. A gas mixture essentially CO, H_2, and N_2 obtained from natural gases by passage together with air and water vapor over a Ni catalyst, water gas obtained by passing steam through incandescent coke, producer gas, and coke-oven gas have all been used.

Cooling. Roasted material must be cooled before it is passed through the separators, on account of the destructive effect on the machines and difficulty in handling. Cooling must be done out of the presence of air in order to prevent reoxidation. Temperature of material leaving the cooler should be less than 100° C. Revolving cylinders, usually with water sprays on the outside of the shell, are frequently used.

At TRAIL (*120 P 864*) it was found that the effect of a roast to increase the magnetic quality of pyrrhotite without complete conversion to Fe_3O_4 was lost if immediate quenching or slow cooling was practiced, but retained with rapid cooling in a rotary cooler.

Performance. PYRITE-BLENDE CONCENTRATE, Wisconsin (*107 J 1107*): Self-roasting furnaces of the Wedge and Skinner types were used with rotary coolers. Characteristic roaster feeds range from 21.6 to 45.9% Zn, 12.8 to 27.4% Fe, 0.22 to 0.82% Pb, 1.50 to 2.15% CaO, and 35.7 to 41.6% S. One plant used an 8-hearth Wedge furnace, 22 ft. 6 in. diam. by 24 ft. high. Ore was heated gradually by the heat of its own combustion to a maximum temperature of 900 to 1,000° F. on the lowest hearth, at which temperature marcasite is strongly oxidized but blende is unaffected. Gases contained 4 to 5% SO_2. Decrepitation and abrasion increased the percentage of <40-m. material from 9% in the entering feed to 30% in the discharge. Four rotary coolers were used, 2×26-ft., 6 r.p.m., with outside spray (30 g.p.m. each). Magnetic quality of the roasted ore was greater when slightly warm than when cold. Dings tray-type separators made rough concentrate assaying 56 to 58% Zn; this was raised to 61.5% Zn by a high-intensity cleaner; tailing contained 4 to 5% Zn and 25% S, which

is suitable for sulphuric acid manufacture. At another plant in the same district (*99 J 977*) the zinc-iron gravity concentrate was given a slight, positively controlled roast in an oil-fired revolving kiln, was cooled in a revolving cooler, and separated on a Campbell separator (tray-type with cross belts for concentrate removal). The raw concentrate assayed 21 to 34% Zn and finished concentrate 49 to 61%, with recoveries of 92 to 95% reported. Shrinkage in weight during roasting ran from 50 to 70%. The iron product was suitable for acid manufacture if not over-roasted. CASSITERITE-PYRITE SEPARATION, Llallagua (*100 J 513*): The furnaces were of McDougall type, 5-hearth; ore was self-roasting (no carbonaceous fuel added); feed was all <1-mm. and assayed about 25% sulphur as pyrite and 15% Sn; furnace feed contained about 5% moisture. Best results were obtained on Stern-type wet separators. (A star-shaped pole-piece revolving 10 to 20 r.p.m. around a horizontal axis in a tank of pulp picks up magnetic material and carries it above the surface of the pulp, where it is washed off the pole arms and over the sides of the tank by a strong jet of water. Current draft is about 6 amp. at 110 v. Capacity: 18 tons per 24 hr. was handled when the roasted product contained 10 to 12% S. Under these conditions the magnetic product contained 50% Fe and 22% S and the nonmagnetic 2.5% Fe and 1.5 to 2% S.) Properly roasted product was black with metallic luster; over-roasting was indicated by a reddish product on which the separators did poor work and discharged a tin product high in iron. Capacity of roasting furnace was about 0.04 ton per sq. ft. of hearth area per 24 hr. Amount of flue dust was less than 5% of the furnace feed and tin content of dust was about 5% on a 20% feed, due in part to the fact that cassiterite does not decrepitate. There was never more than 2% loss of tin in dust. COPPER-IRON, Calumet and Arizona Smelter, Douglas, Ariz. (*Bul 9 MSM 38*): Davis states that magnetic roasting was incidentally performed at this plant in connection with drying and desulphurization prior to smelting. The ore, crushed to pass a 1-in. screen, was roasted in a 6-hearth McDougall-type oil-fired furnace 21 ft. 6 in. diam. at the rate of 80 to 100 tons per 24 hr. with conversion of about 80% of the iron to magnetic oxide at a total operating cost in 1919–20 of $0.31 per ton.

HEMATITE from tailing pile, Cooley, Minn. (*A TP 731; 22 MCJ 20*): Ore was crushed to pass 3/4-in. screen, then screened at 4-m. and the products binned. Screened products were fed to a shaft-type furnace, coarse ore in an outside annular position, fine ore centrally, in a ratio of 5 : 1. Furnace was heated by oil; heating zone was 4 ft. high, 6 ft. diam.; reducing zone (located immediately below heating zone) was 14 3/4 ft. high and 3 1/2 ft. diam. Fine and coarse ore were mixed at the head of the reducing zone by suitably disposed baffles. After passage through the reducing zone, ore was cooled over a distance of 7 ft. and finally quenched. An operating time of 692 hr. in one month, with a loss of 3.9% of possible time, during which 5,802 tons of ore was reduced, is reported. Oil consumption was 9.5 g.p.t.; electric energy 3.3 kw-hr. per ton; 1.3 men per shift were required. Cost was 67.7¢ per ton, of which 55.5¢ was for oil, 5¢ for power, and 7.2¢ for labor. Calcined ore was concentrated by wet cobbers, which make a concentrate of 62.3% Fe and tailing of 21.4% Fe from a feed of 46.8% Fe, with a recovery of 64.3%. TACONITE-LIKE ORE, Anzan, South Manchuria (*Bul 40 M 43 UM 13*): This is the largest magnetic-roasting plant in the world. Ore is crushed, sized to 4~0.4-in., and given a magnetic roast in a shaft-type furnace at 600 to 700° C. Calcine is ground to 150-m., and concentrated on Gröndal separators. Concentrate is dried and sintered. Furnace capacity is 300 to 400 t.p.d.; fuel consumption per ton of ore is 54 to 68 lb. of powdered coal and about 35,000 cu. ft. of coke-oven gas; electrical energy, about 2.2 kw-hr. Ore assays 38.4% Fe and 6% FeO, concentrate 57% Fe. Recovery is 80 to 90%. Production of sinter is 260,000 tons per year. SPATHIC IRON ORE, Eupel mine, Germany (*Bul 425 USBM 279*): Ore is crushed to <120-mm., roasted, and the calcine screened to 120~70-, 70~35-, and <35-mm. The two coarse sizes go to picking belts where tailing, intermediate products, and half-roasted material are picked out. Intermediate products are crushed through 35-mm. and join the <35-mm. calcine; this mixture is screened to 35~18-, 18~12-, 12~6-, and <6-mm. These products, concentrated on drums, yield concentrate, middling, and finished tailing. Middling is combined, reground to <4-mm., and separated on a drum into concentrate and tailing. Crude ore assays 39 to 40% Fe, 7.4 to 7.5% Mn; concentrate, 49 to 49.3% Fe and 9% Mn. Recovery is 95%.

7. GUARD MAGNETS

Lifting magnets are used primarily in crushing plants to remove tramp iron and steel from the feed before it goes to a crusher incapable of handling it. It is stated (*112 J 728*) that at MELONES MINING Co. a magnetic pulley placed ahead of a primary crusher saved $1,400 per month in delay and repairs. The magnet is usually placed either at the head pulley of a conveyor belt or over the belt itself. In the former position it should be hung at an angle and offset to prevent magnetization of the pulley (Fig. 45*a*). When placed over the conveyor (Fig. 45*b*) a sufficiently long suspension is used so that the magnet can be swung aside for discharging. Magnets are usually of the type used for lifting scrap iron in handling plants, and are sufficiently powerful to lift pieces of steel from the rapidly moving masses of coarse ore and, as the load builds down, to hold it against the blows of the material moving

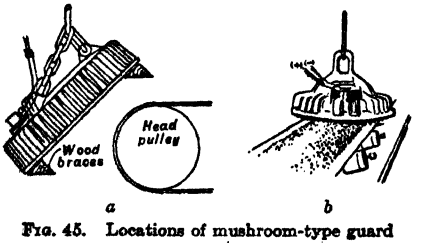

FIG. 45. Locations of mushroom-type guard magnets.

with the belt. Auxiliary signaling devices are available to warn operators when magnets are overloaded. High-intensity rectangular magnets, as wide as the belt, are lighter than a circular magnet for the same purpose.

Performance. Table 14 summarizes results of a study (*Bul 425 USBM 293*) of guard magnets at four washeries. At ST. JOSEPH LEAD Co., Hughesville (*IC 6447*), a 39-in. magnet drawing 17 amp. at 125 v., suspended over head pulley, guards a cone crusher; at MT. ISA (*IC 7073*) cone crushers are protected by 2 @ 2-pole high-intensity magnets; at BALMAT (*IC 6574*) a #39 magnet placed between jaw and gyratory crushers protects the latter; at CANANEA (*IC 6261*) a suspended magnet and magnetic pulley were used to protect cones; at PIONEER (*112 A 679*) a 29-in. magnet suspended over a

Table 14. Performance of guard magnets at Pittsburgh Coal Co.

	Washery			
	1	3	4	5
Location	*a*	*b*	*c*	*d*
Belt conveyor: Width, in.	60	60 (boom)	42	36
Speed, f.p.m.	288	73 (boom)	350	330
Capacity, t.p.h.	950	350 (boom)	450	475
Depth of load, in.	8			
Magnet: Diameter, in.	64	60	46	45
Weight, lb.	3,160	750	2,240	
Distance from coal, in.			7	4.5
Voltage	250	500	230	230
Amperage	25	3.09	15	12
Tramp metal, lb. per shift:				
Caught	140	10	10–200	200
Missed	A little *e*	Rarely	Small amount	Some
Character	*f*	*g*	*h*	*i*
Cost, ¢ per ton	0.00001	0.06	0.004	

a 18 in. ahead of and above discharge of belt before main screen, magnet adjustable.
b One at each end of two loading booms, beneath coal; magnet not adjustable.
c Over belt before crusher, magnet adjustable.
d At discharge end of new-coal belt; magnet adjustable.
e Especially 12-lb. wedge blocks from mine cars.
f Parts of railroad and mine cars, spikes, bolts, picks, axes, and mule shoes.
g Machine bits, track spikes, etc.
h Parts of mine cars, spikes, etc.
i Machine bits, spikes, bolts, augers, picks, plate pins, machine parts, shot wire, wrenches, knives, and keys.

24-in. belt is powered by 5 kw.; at FRESNILLO (*112 A 736*) a 42-in. magnet is suspended over a 30-in. belt, and with a magnetic head pulley guards a cone crusher. At MCINTYRE-PORCUPINE, Ontario (*Bul 425 USBM 296*) a 55-in. magnet is suspended above the head sprocket of a 48-in. pan conveyor. It is inclined 23° from the vertical and offset 4 in. above the center line of the head shaft. The conveyor, moving 5 f.p.m., carries <7-in. ore from the primary crusher. Depth of bed is 20 in.; about 140 lb. of tramp iron is removed daily at a cost of 0.05¢ per ton of ore. Power, 5.25 kw. Since this magnet misses some metal, a second magnet, 45 in. diam., drawing 20 amp. at 216 v., is located over the discharge belt from the following cone crusher. The belt is troughed, 36 in. wide, travels at 275 f.p.m. and carries <1.5-in. material. The second magnet is reported to miss no metal, and collects 60 lb. per day at a cost of 0.035¢ per ton of ore.

Magnetic pulleys are frequently used as guard magnets. Pulleys have the ADVANTAGE that tramp iron, which frequently stratifies next to the belt, need not be pulled through the bed; they do not accumulate iron above the belt, with consequent danger of redischarge into the stream by jostling or power failure; and they require less inspection.

Performance. At SUNSHINE (*Bul 425 USBM 206*) a 24-in. magnetic pulley at 11 1/2 r.p.m. removes 40 to 50 lb. of tramp iron per 24 hr. 60 t.p.h. from <8-in. material. Pulley draws 15 amp. at 120 v. Another pulley at 12 3/4 r.p.m. is fed 100 t.p.h. of <12-in. material on a 30-in. belt.

Guard magnets cannot be used in plants treating magnetite ore, on account of the magnetic character of the ore itself. Also, guard magnets will not lift manganese steel, because of its low permeability. At the REPLOGLE STEEL Co. plant, vertical disk crushers set to 1/4-in. were guarded by a screen with 3/4-in. aperture sending oversize in closed circuit to a set of rolls. These were rugged enough to break up the steel fine enough to pass the disk machines without injury to them. At the UTAH COPPER Co., where manganese-steel dipper teeth are used on the steam shovels, close watch is kept on the shovels and when a tooth is missing a telephone message is immediately sent to the mill (18 miles distant) and particularly close watch is kept as the ore is unloaded to the primary crusher, until the tooth is found and removed.

Magnetic chute. Fig. 46 shows a method of applying a guard magnet to a chute. Magnets *a* are so arranged as to produce a strong field in the chute and catch and hold tramp iron until it is removed

by an attendant. Just below the magnetic zone a tilting section *b* is placed in the chute bottom. This is held in closed position by the magnets *c* so long as there is current flowing through the guard magnet but if current is cut off, accidentally or otherwise, the tilting section is released and spills the released iron together with the feed stream onto the floor until such time as the feed is cut off or the tilting section is closed with current again flowing.

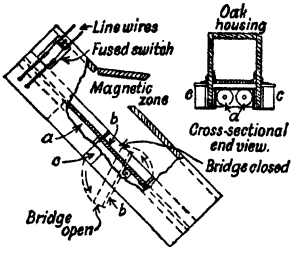

FIG. 46. Magnetic chute.

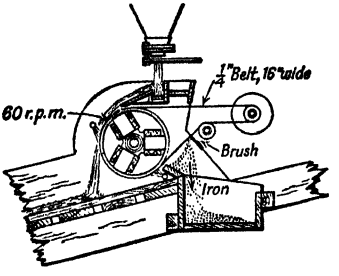

FIG. 47. Pulley-type separator in tube-mill circuit at Simmer and Jack mill.

Magnets in grinding-mill circuits are used in cyanide plants to remove iron introduced by abrasion from the crushing and grinding machines.

Unless removed, this iron, being difficult to grind, builds up to such an extent that it may amount to as much as 15% of the total circulating load (ALASKA-TREADWELL GOLD MINING CO., *96 J 452*).

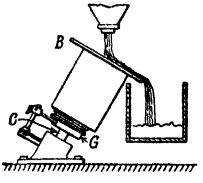

FIG. 48. Brown electromagnet for tube-mill circuit.

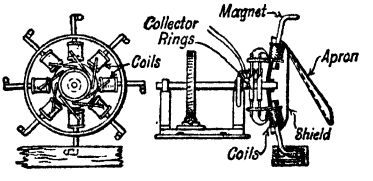

FIG. 49. Magnet for tube-mill circuit at Alaska Treadwell.

Schmidt (*RMP*) states that as much as 900 lb. of metallic iron per day has been removed from a RAND tube-mill circuit and that prior to the introduction of a magnet at the SIMMER AND JACK mill it was necessary to open the tube-mill circuit for 15 min. each day, and pass the whole pulp to the cyanide plant without regrinding, in order to clear out the accumulation of iron. Fig. 47 shows an application of a pulley-type separator (Art. 4) at this mill. Fig. 48 shows another type of separator in similar service (*90 J 445*). A flat disk-shaped cast-iron pole-piece *B* of an electromagnet with cast-iron core is mounted to revolve on shaft *C*, which is inclined 35° from the vertical. Current enters through slip-ring *G*; the other end of the coil is grounded. Winding is encased water-tight by a zinc sheath soldered to the iron bobbin of the winding. The magnet is driven at 6 r.p.m. by a 0.5-hp. motor; exciting current is 2.5 amp. at 100 v. Iron is caught on the rim of the plate and is scraped off by a piece of canvas belting.

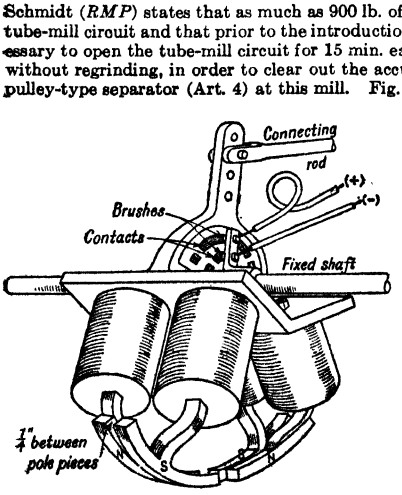

FIG. 50. Pulp magnet at Liberty Bell.

A magnet used at ALASKA-TREADWELL is shown in Fig. 49. The magnet poles dip into the tube-mill discharge launder leading to a Dorr classifier. Current on a given pole is broken by a commutator when the pole-piece reaches a position above the apron. Fig. 50 shows a pair of oscillating magnets with curved pole-pieces that were swung in a semicylindrical section of a main pulp launder at the LIBERTY BELL G. M. Co. Water jets washed the poles as they emerged from the pulp and current was cut off when the magnet reached the highest point of the swing at which time it overhung the edge of the launder. Each pole had 800 turns of wire and drew 2.0 to 4.0 amp. at 110 v. The machine made 4 to 5 oscillations per min. and required about 0.1 hp. for driving. Feed rate was 100 tons of <16-m. material per 24 hr. in a pulp carrying about 10% solids. Removal of metallic iron was reported practically complete.

Manufacturers. The typical machines described are built by different manufacturers as follows; for a particular type the products of the different manufacturers differ primarily in mechanical or electrical details, but not in basic principles.

American: Bauer Bros. Co.; Cutler-Hammer, Inc.; Dings Magnetic Separator Co.; Electric Controller & Manufacturing Co.; Exolon Co.; A. E. Jacobson Co.; Jeffrey Manufacturing Co.; Ohio Electric Manufacturing Co.; Stearns Magnetic Manufacturing Co. *British:* Rapid Magnetting Machine Co.; Bepco Canada, Ltd. *Swedish:* Aktiebolaget Industrimetoder; Patentaktiebolaget Gröndal-Ramén, Aktiebolaget Arboga Mekaniska Verkstad.

8. MAGNETIC FLOCCULATION

Magnetic flocculation is based upon the fact that magnetized particles of a magnetically hard material, when free to move, will bunch together with unlike poles in contact so far as possible, the net effect being to reduce the external field to a minimum.

Gröndal slime separator consists of a primary magnet with wedge-shaped pole-piece mounted above a spitzkasten through which the slime feed is run. Mineral particles of relatively high coercive force become magnetized under the influence of the magnetic field, are drawn together just below the water surface, and there form flocs that sink and are drawn off from the bottom of the tank. In another form a strong horizontal surface current skims the enriched surface layer of slime from the tank before sufficient agglomeration has occurred to cause the magnetic material to sink; in this case the mineral may be magnetically soft.

Demagnetizer. For materials of low coercive force, the demagnetizer consists of a conical coil comprising a large number of turns carrying alternating current, surrounding an iron pipe carrying magnetized pulp. For materials of high coercive force a demagnetizer made of a water-cooled solenoid 3 in. in diam., 3 1/2 in. in height, with 6 turns per inch, connected to a 3 kv-a. mercury-arc converter drawing 5 amp. at 220-v., 60-cycle alternating current, is effective; the frequency is estimated at 50,000. Also effective with high coercive material is a solenoid comprising 5,000 turns of No. 22 double cotton-covered-magnet wire wound over a 3-in. length of 1 3/8-in. nonmetallic tubing; electrical connections are made as shown in Fig. 51. The oscillatory discharge of the condenser is effective in demagnetization.

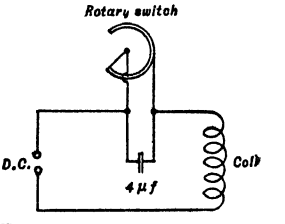

FIG. 51. Circuit for a demagnetizer.

Use. When an ore that has been over a magnetic separator is finely ground, there may be sufficient residual magnetism in the magnetic particles to cause them to agglomerate and, in classification, to go with the unground sands rather than overflow with the slimes. Effective closed-circuit grinding is thus prevented. Passage through a demagnetizer remedies this difficulty. At MESABI IRON CO. a conical demagnetizer was used on the ball-mill discharge feeding bowl classifiers. Demagnetizers are also used on the ferrosilicon medium of the sink-float process after magnetic cleaning.

9. DESIGN OF MAGNETIC SEPARATORS

The fundamental elements of every successful magnetic separator are (*a*) a magnetic field of sufficient intensity and inhomogeneity to cause a marked difference in the magnetic forces acting on the magnetic and nonmagnetic particles in the mass to be separated; (*b*) a means for bringing the material to be separated to the magnetic field in such a way that the particles have sufficient freedom of movement under the influence of the magnetic forces to permit the magnetic particles to move away from the nonmagnetic or *vice versa;* (*c*) a force or forces such as gravity, centrifugal force, or the friction of a solid or fluid, acting against the magnetic force, and serving to intensify the difference in direction of movement of the magnetic and nonmagnetic particles; (*d*) a means for removing both magnetic and nonmagnetic particles from the magnetic field after separation.

Design of magnetic systems to give fields of sufficient intensity and inhomogeneity for efficient magnetic separation involves (*1*) proper choice of pole shapes and a disposition thereof to produce most efficient inhomogeneity of field (not necessarily maximum inhomogeneity), (*2*) selection of proper materials for cores and poles, and (*3*) specification of winding of the required number of ampere-turns.

Shapes of pole-pieces are determined empirically on the basis of designs already in use. The usual method of producing nonuniform fields is to use wedge-shaped pole-pieces on the collecting poles (see p. 23) or to build collecting armatures of alternating disks of magnetic and nonmagnetic materials. Arrangement of pole-pieces yields to solution by mathematical means in simple cases; the more complex cases are solved by graphical mapping of the field followed by a determination therefrom of the degree of inhomo-

Table 15. Magnetic properties of typical magnetically soft materials. (*After Legg, 18 BSTJ 438*)

Composition, %						Cost, *a* ¢/lb.	Typical anneal	Name	Permeability		Ferric flux density, gauss *e*	Hysteresis loss per cycle, erg/cc.	Remanence, gauss	Coercive force, oersted	Curie temperature, °C.	Density gm./cc.
Other	Mn	Mo	Ni	Cu	Fe				Initial	Maximum						
3 C, 2 Si	.....	.....	.....	.....	95	<1	800° C.	Cast iron	.....	600	.....	20,000	5,300	4.6	.....	.....
	.....	.....	.....	.....	99.94	7*b*	900° Pot	Magnet iron	250	5,500	21,500	5,000	13,000	1.0	770	7.88
	.....	.....	.....	.....	99.98	7	1,480° H_2+ 880° H_2	Magnet iron H_2 purified	25,000	275,000	21,500	300	13,600	0.05	770	7.88
0.5 Si	.....	.....	.....	.....	99.5	7 *b*	800° Pot	1/2% Si-Fe *c*	250	3,700	21,000	4,500	12,800	0.8	760	7.7
4 Si	.....	.....	.....	.....	96	8 *b*	800° Pot	4% Si-Fe *d*	400	6,700	20,000	3,500	12,000	0.5	690	7.5
9.5 Si, 5.5 Al	.....	.....	.....	.....	85	3	Cast	Sendust	30,000	120,000	10,000	100	5,000	0.05	.....	7.1
0.2 Cu	.....	.....	99	.....	0.4	35	1,000° Pot	Nickel	110	600	6,100	3,000	3,600	3.4	360	8.85
	0.6	.....	45	.....	54.4	17	1,100° Pot	45 Permalloy	2,700	23,000	16,500	1,200	8,000	0.3	440	8.17
	....	.....	50	.....	50	18	Long 1,200° H_2	Hipernik	3,000	70,000	16,500	220	7,300	0.04	500	8.25
	0.6	.....	78.5	.....	20.9	28	1,000°+Quench	78.5 Permalloy	9,000	105,000	10,700	200	6,000	0.05	580	8.60
5 Cu	1.0	.....	74	.....	20	27	900°+Quench	Mumetal	7,000	80,000	8,500	200	6,000	0.05	.....	8.58
3.8 Cr	0.6	.....	78.5	.....	17.1	29	1,000° Pot	3.8–78.5 Cr-Permalloy	10,000	40,000	8,000	200	4,500	0.05	455	8.56
	0.6	4	79	.....	16.4	32	1,000° Pot	4–79 Mo-Permalloy	22,000	72,000	8,500	200	5,000	0.05	460	8.72
15 Cu	1.0	3	71	.....	10	29	1,100° H_2	1,040 Alloy	40,000	100,000	6,000	200	2,500	0.014	290	8.76
	.....	12.5	80	.....	7.5	40	800° H_2	12.5–80 Mo-Permalloy	9,000	*f*	*f*	*f*	*f*	*f*	40	8.9
	.....	.....	.....	99	.....	136	1,000° Pot	Cobalt	70	240	18,000	2,000	5,000	10.0	1,120	8.9
	.....	.....	.....	50	50	69	900° Pot	Permendur	800	5,000	24,500	12,000	14,000	2.0	1,000	8.3
2V	.....	.....	.....	49	49	73	800° Pot	2V-Permendur	800	4,500	24,000	6,000	14,000	2.0	980	8.2
	0.6	.....	45	25	29.4	50	1,000°+425° Bake	45–25 Perminvar	365	1,800	15,500	4,000	3,300	1.4	715	8.3
	0.6	.....	70	7	22.4	35	1,000°+425° Bake	7–70 Perminvar	850	4,000	12,500	.....	2,400	0.6	650	8.6
	0.6	7.5	45	25	21.9	57	1,000°+425° Bake	7.5–45–25 Mo-Perminvar	550	3,800	10,300	2,600	4,300	0.6	540	8.66

a As of 1939.
b For 14-mil sheet, approximate.
c Used for fields.
d Used for transformers.
e Ferric flux density = $B - H = 4\pi I$; values given for magnetic saturation.
f Over room temperature range.

geneity (A. D. Moore, *Fundamentals of Electrical Design*). The extent and character of the inhomogeneity desirable in a field to be used in separating ores should be determined by the conditions of operation and the character of the ore. The rules are yet to be enunciated; in most designs the subject is not even investigated.

Selection of magnetic materials for cores and pole-pieces is made according to the particular characteristic required. Thus for an electromagnet, a material having a relatively large permeability and large saturation flux density is usually desired in order to reduce the magnetomotive force and the weight of material. On the other hand, if the electromagnet is to be used to produce an alternating magnetic field, the energy dissipated in the core must be kept at a minimum, hence material possessing a hysteresis loop of small area is desired. If the electromagnet is to be used in a particular range of flux density, the material should have its maximum permeability in this range and the μ–H curve (see Fig. 5) should not be too peaked. If the magnet is to be subjected to large variations in temperature the μ-temperature curve (see Fig. 7) should be as nearly parallel to the temperature axis as it is possible to obtain. Materials used in magnets for ore separators are of high permeability with large saturation flux density (see Table 15).

Permanent magnets are used in the Frantz Ferro-filter (p. 21). Increasing use of magnetically hard materials is forecast by the advent of newer magnetic alloys and by the ever increasing use made of such materials in the field of instrumentation. With permanent magnets the characteristics sought are a high coercive force and a large value of the energy product BH since the latter is a measure of the energy stored in the gap (see Table 16).

Windings of coils may be calculated to give the desired field intensity in the gap in any number of ways, *e.g.*, the total reluctance of the magnetic circuit may be calculated from Eq. 12, since the gap range and mean path in core (set by dimensions and design of separator magnet) as well as the permeabilities are known, the ampere-turns required are then computed by means of Eq. 11. The problem

Table 16. Magnetic properties of typical magnetically hard materials. (*After Legg, 18 BSTJ 438*)

Composition, %						Cost, ¢/lb. *b*	Heat treatment		Name	Permeability		Ferric flux density, gauss	Remanence, gauss	Coercive force, oersted	Energy product, *d* $(BH)_{max} \times 10^6$	*B* for maximum value of *BH*, gauss	Curie temperature °C.	Density gm/cc.
Other	Al	Cr	Ni	Co	Fe		Quench	Aging		Initial	Reversible							
0.6 C, 0.8 Mn	.....	.....	.....	.....	98.8	0.8	800° Water	.....	Magnanese	75	.....	21,000	10,000	50	0.2	6,900	750	7.8
0.6 C, 0.4 Mn	.....	—1	.....	.....	98	0.9	800° Oil	.....	1% Chrome	.....	.....	.....	9,800	50	0.2	6,900	.....	.....
1 C, 0.4 Mn	.....	3	.....	.....	96	1.1	840° Oil	.....	3% Chrome	.....	31	.....	9,700	65	0.3	6,100	.....	7.7
5 W, 1 C	.....	.....	.....	.....	94	9	840° Water	.....	5% Tungsten	.....	32	.....	10,800	60	0.3	7,000	.....	8.0
7 W, 0.5 Mn	.....	3.5	....	36	52	62	940° Oil	.....	Cobalt (Honda KS)	7	9.4	19,000	9,500	220	0.9	6,000	700	8.3
6.7 Ti	3.7	.....	18	27	45	53	Cast	650°	Honda, new KS	3	3.8	.....	7,100	780	2.0	4,100	.....	7.3
	13	.....	29	.....	58	14	1,200° Oil	600°	Mishima	4	5	11,600	6,000	550	1.4	3,500	750	7.1
	14	.....	25	.....	60	12	1,200° Oil	600°	Oerstit 500	.....	5	.....	6,500	500	1.4	4,400	.....	.....
	12	.....	20	5	63	17	1,200° Oil	600°	Alnico I	.....	4	.....	7,300	430	1.4	4,500	.....	7.0
6 Cu	10	.....	17	12.5	54.5	26	1,200° Oil	600°	Alnico II	.....	4	.....	7,200	540	1.6	4,400	.....	7.1
17 Mo	.....	.....	.....	12	71	33	1,300° Oil	700°	Remalloy	8	12	17,000	10,500	250	1.1	6,500	780	8.4
60 Cu	.....	.....	20	.....	20	13	1,000° Oil	600°	Magnetoflex	3	3	5,000	3,400	390	0.5	1,800	.....	.....
41 Cu	.....	.....	24	35	.....	60	1,050° Oil	600°	Magnetoflex	4	4	8,600	5,300	440	1.0	3,400	850	8.7
77 Pt	.....	.....	.....	23	.....	$400	1,200° Oil	.....	77 Platinum-cobalt	1.1	1.1	.....	4,500	2,600	3.8	2,500	.....	.....
a	.....	.....	.....	.....	.....	25	*c*	.....	Compressed oxide	1.7	1.7	.....	1,800	600	.....	.....	350	3.8

a 2% Fe_2O_3 + 1% Fe_3O_4 + 1% Co_2O_3.
b As of 1939.
c 950° C. vacuum with magnetization at 500° C.
d Related to energy stored in the gap; most economic use of a permanent magnet occurs when BH is maximum and magnet volume a minimum.

is thus resolved into a proper choice of coil such that for a given voltage across its terminals the desired ampere-turns are produced without overheating. Standard procedures are here followed (*Standard Handbook for Electrical Engineers*, Sec. 5, McGraw-Hill Book Co.), making allowance for any special limitations imposed by the problem.

ELECTROSTATIC SEPARATION

Electrostatic separation utilizes the force of an electric field, coacting with some other force, to produce differential movement of mineral grains. The basis for such separation is found in the differences in interfacial resistance offered by different minerals to the passage of electrons therethrough, modifying factors being specific gravity, size, shape, surface condition, and purity of the mineral particles, as well as the mechanical and electrical attributes of the separator.

10. PRINCIPLES

Charges are fundamental entities which possess the property of attraction or repulsion for one another. Two types are recognized, a positive charge (PROTON) and a negative charge (ELECTRON). The force exerted by one charged body upon another is given by e_1e_2/r^2 where e_1 and e_2 are the charges of the two bodies and r is the distance between them; a negative value of this force denotes attraction, a positive repulsion.

Electric field of a charged body is the surrounding space through which its influence extends. As with the magnetic field, the electric field may be mapped by lines of force, at every point of which the tangent has the direction of the force that would be exerted on a positive charge located at that point. The magnitude of this force is known as the ELECTRIC FIELD INTENSITY and the work required to bring a unit positive pole from infinity up to this point as the ELECTRIC POTENTIAL.

Matter is conceived of as a collection of positive and negative charges together with certain other fundamental particles, the ensemble constituting a complex dynamical system in equilibrium. Thus a hydrogen atom is said to consist of a central positively charged nucleus about which there revolves an electron. In general, the atom is composed of a large number of positive and negative charges, the former being concentrated in the nucleus about which the latter revolve, in much the same fashion as the planets revolve about the sun.

Polarization. Influence of an electric field upon an atom is approximately the resultant of the influences upon the constituent charges. In an atom between two dissimilarly charged plates, the electrons are attracted by the positively charged plate and repelled by the negatively charged, while the nucleus is attracted by the latter and repelled by the former. The result is that the centers of position of the positive and negative charges no longer coincide but are shifted apart through a distance which depends upon the intensity of the field. This phenomenon is known as polarization. If a large number of atoms are strung together to form a particle of matter, the effect of the electric field is to shift the electrons toward that end of the particle which is closest to the positively charged plate. The nuclei, on the other hand, being tremendously heavier than electrons, and held together by the cohesive forces of matter, are not appreciably shifted; in any event, a displacement of the centers of position of the positive and negative charges has taken place.

Current. Movement of electrons through matter, noted above, constitutes a CURRENT. The ease with which this flow takes place depends upon the nature of the material; in all cases it is resisted by a force, analogous to fluid resistance. RESISTANCE depends upon the chemical and physical properties of matter. Substances which offer small resistance to the passage of electrons are known as CONDUCTORS, those offering large resistance as nonconductors (INSULATORS or DIELECTRICS). It should be noted that conduction takes place through all materials providing the driving force exerted on the electrons is sufficiently great. The principal flow of electrons with solid conductors is along the surface.

Charging by induction. If a polarized particle, maintained free of any contact with a conductor while in the electric field, is removed from the field, the polarization is found to have disappeared and the particle is uncharged. However, if a polarized particle is placed in temporary contact with a grounded conductor (conductor connected to the earth) when in the electric field, it is found to be charged upon removal from the field. It can be shown that the conductor provided a path along which electrons could be removed from or brought to the polarized body under the driving force of the electric field, the earth serving as an electron reservoir.

Charging by conduction. When two spherical particles charged with different amounts of electrons are brought into contact, flow takes place from the more highly charged to the other, and ceases when the charge on the two is the same. This may be considered as a kinetic exchange of electrons between the two; when so viewed it appears that the work done in moving an electron from the more highly charged sphere against the forces of repulsion due to the electrons on the other is less than the work done in moving an electron in the reverse direction. Flow continues from the body at higher potential to that at lower potential until the potential difference between the two bodies vanishes. If the potential difference between two bodies placed in air is sufficiently great, the bodies need

not be brought into contact for electrons to flow from the body at higher potential to the other, since now the resistance of air to passage of electrons may be overcome.

Pyroelectric charging. A limited group of natural and artificial crystals exhibit polarization upon change in temperature. Thus when a tourmaline crystal is heated, a positive charge appears at the pointed end of the Z-axis (termed the ANALOGOUS POLE) and a negative charge at the opposite end (ANTILOGOUS POLE); cooling of a tourmaline crystal develops charges in the opposite sense. The poles are readily located by dusting the polarized crystal with a mixture of positively charged litharge and negatively charged sulphur (*20 Wied. Ann. 592*). The lines of force are similar to those of a bar magnet (Fig. 1); they are rendered visible by placing the polarized crystal in a container filled with smoke produced by burning magnesium ribbon (*24 Proc. Camb. Phil. Soc. 491*), when filaments of magnesium oxide develop along the lines of force. Crystals exhibiting pyroelectric effects are characterized by absence of a center of symmetry and of twinning, *e.g.*, calamine, tourmaline, and boracite. Some twinned crystals such as topaz, axinite, and dioptase exhibit pyroelectricity in a somewhat modified form, the electrical axes being replaced by ill-defined regions (*9 Z. techn. Phys. 430*). Many crystals show a pseudo pyroelectric effect when subject to changes in temperature; actually the effect noted is due to piezoelectricity developed by internal stresses arising from the temperature gradients established by the heat treatment. Thus quartz when heated and maintained at a uniform temperature shows no polarization, but if the crystal is then cooled three axes of polarization appear (*45 Ann. Phys. 737; 46 ibid. 221*).

Piezoelectric charging. Excepting crystals belonging to the class 432-0 (Bragg and Bragg, *The Crystalline State*, Bell, 1933, p. 86), natural or artificial crystals, lacking a center of symmetry, develop electric charges on their surfaces when subjected to mechanical stresses. In general, three polar axes corresponding to six surface areas of charge are found. Charges are also developed on the surfaces of uncharged, stressed crystals when the stresses are removed. Development of internal strains by temperature gradients, magnetostriction, etc., is invariably accompanied by piezoelectric charging.

Interfacial resistance. The ease with which electrons enter or leave a polarized body depends upon the resistance offered by the interface between the body and the conductor. The interfacial resistance depends upon the potentials of the body and conductor at the point or surface of contact, upon the nature of the contact, *e.g.*, point against a flat surface, and, in general, upon the chemical and physical properties of the contacting materials. Thus the interfacial resistance of a TiO_2 crystal in contact with gold is fourteen times greater than when it is in contact with magnesium (*27 Compt. rend. acad. sci. URSS 547*). Also the interfacial resistance with crystalline materials differs along the different crystallographic axes. With materials that are good conductors, the number of electrons per unit of time that can be transported across the area of contact depends primarily upon the area of contact and the number of electrons in the vicinity of the contact area. The latter depends upon the shape of the particle, *i.e.*, in a spherical charged body the electrons are uniformly distributed over the surface, whereas in an irregular body the electrons tend to concentrate at the peaked parts of the surface. With poor conductors the rate of transfer of electrons depends additionally upon physical structure and orientation. Column 4 of Table 17 (after Johnson, *A TP 877*) gives a relative empirical measure of interfacial resistance based on an assumed resistance of unity for graphite.

Electrostatic forces. The laws of attraction and repulsion of charged particles are strictly analogous to the laws describing the interaction of permanent magnets. Coulomb's law describes the force existing between two charged bodies, if the fields of the bodies produce no alteration in distribution of charge. The electrostatic equation analogous to Eq. 21 is

$$F_x = -\rho_e \frac{\partial V}{\partial x} - \frac{E^2}{8\pi}\frac{\partial \epsilon}{\partial x} + \frac{\partial}{\partial x}\left(\frac{E^2}{8\pi}\rho\frac{\partial \epsilon}{\partial \rho}\right) \tag{35}$$

where ρ_e = the charge density and ϵ = dielectric constant, and V and E are analogues respectively of A and H in Eq. 21. The first right-hand term of Eq. 35 is the Coulomb term; the second accounts for variable inductive capacity of the body; the last for the energy stored within the body as a consequence of configuration changes. As with magnetic bodies, in the absence of a permanent charge, *i.e.*, $\rho_e \dfrac{\partial V}{\partial x} = 0$, the force is determined primarily by the inhomogeneity and magnitude of the field intensity, and by the inductive capacity of the body. One important difference should be noted: unlike magnetic poles, charges may move slowly over the surface of the body.

If a negatively charged insulated sphere is brought near an uncharged particle suspended by an insulated string, polarization is induced in the particle and it is attracted

toward the sphere, since the latter possesses a convergent field of force. When the attracted particle touches the surface of the charged sphere it becomes negatively charged by conduction and is immediately repelled by the Coulomb force. If either sphere or particle is a poor conductor, high interfacial resistance may cause a time lag of several seconds before the particle becomes charged by conduction and is repelled. If the suspended particle is initially charged negatively to a lower potential than that of the sphere, the particle is first repelled, then attracted. The repulsion is Coulomb repulsion between the negative charges on sphere and particle. On closer approach polarization induced in the particle by the electric field of the sphere surpasses the initial negative charge on the particle, and electric-dipole attraction becomes stronger than the Coulomb repulsion so that the resultant is an attractive force. If the negatively charged sphere is located at such distance from a negatively charged particle that a force of repulsion is exerted, and the particle is touched for a short though finite length of time to a grounded conductor, the force changes to attraction if the particle is a sufficiently good conductor and the interfacial resistance is low enough to permit draining off the initial negative charge in the time available; induced polarization then determines the force exerted by the sphere. Conversely, the force remains repulsion. Further contact time may cause the particle to become positively charged through the loss of electrons. On long contact with a grounded conductor, even a poorly conducting particle becomes positively charged. Relative conductivities of minerals are given in Table 17.

Reversibility. An originally uncharged particle momentarily grounded when in the field of a charged electrode develops a charge of polarity opposite to that of the electrode. The time required for the induced charge to build up depends upon the electrical properties of the particle. If the uncharged particle is introduced onto the surface of a grounded roll *A* (Fig. 52) and brought into the electric field of the charged electrode *B* (which can be charged either positively or negatively as desired), the situation is strictly analogous to that described above. The time permitted for inductive charging of the particle depends upon the speed of *A* and the arc length covered by the electric field. In the absence of any field, conducting and nonconducting particles leave the roll under the action of the gravitational and centrifugal forces and follow thereafter a normal parabolic trajectory, the heavier particles reporting farther from the roll. In the presence of an electric field, the particles conducting in that field are first polarized, then lose or gain electrons to or from the grounded roll, according as the electrode *B* is negatively or positively charged, and thus become correspondingly positively or negatively charged. Owing to the charge developed, an electric force acts and the trajectory is spread beyond the gravitational trajectory. The particles nonconducting in the field follow their normal trajectories since their interfacial resistance to passage of electrons is too high to permit charging in the time the particle is in the field. Johnson (*A TP 877*), using the experimental setup shown in Fig. 52, determined the potential of electrode *B* required to shift the particle trajectory from *D* by an arbitrary amount *DC*. The values obtained are given in Column 5 of Table 17.

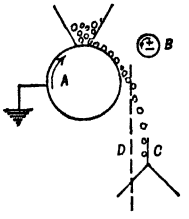

FIG. 52. Experimental setup for reversibility testing.

Johnson also reports that some minerals differ in their behavior according to the polarity of the charged electrode. He has called such minerals reversible. Thus calcite acts as a conductor at a potential of 10,920 v. only when electrode *B* is negatively charged; when *B* is positively charged, calcite acts as a nonconductor. Assuming the validity of the classical explanation of inductive charging, it follows that the interfacial resistance offered to passage of electrons from calcite to metal roll is less than the resistance to passage from metal to calcite. If this is true, then calcite will again act as a conductor when *B* is positively charged to some potential greater than 10,920 v. Minerals that apparently develop only a positive inductive charge Johnson terms REVERSIBLE POSITIVE; conversely, reversible negative minerals are also found. Such reversibility is generally exhibited by the poorer conductors, principally by silicates, carbonates, and some oxides; silicates and oxides are usually reversible negative and carbonates reversible positive. As with tables of magnetic permeabilities, Table 17 is probably subject to errors due to impurities in the natural minerals. It is also reported (H. B. Johnson, *PC*) that the polarity of the reversibility, in the case of some minerals, changes with size and possibly with shape.

11. MACHINES

Electrostatic concentrators are of two principal types, classification being based on intensity of the electrical field. In HIGH-INTENSITY MACHINES a relatively wide divergence

Table 17. Relative empirical mineral conductivities

No.	Mineral and chemical composition	Source	Relative voltage	Voltage	Reversible *a*
	NATIVE ELEMENTS				
1	Flake graphite, C	Texas	1.00	2,800	Non
2	Graphite-plumbago, C	Ceylon	1.28	3,588	Non
3	Sulphur, S	California	3.90	10,920	RP
4	Arsenic, As	Canada	2.34	6,552	Non
5	Antimony, Sb	California	2.78	7,800	Non
6	Bismuth, Bi	Canada	1.67	4,680	Non
7	Silver ore, Ag	Cobalt	2.34	6,552	Non
8	Iron in basalt, Fe	Germany	2.78	7,800	Non
	SULPHIDES				
9	Stibnite, Sb_2S_3	Nevada	2.45	6,864	Non
10	Molybdenite, MoS_2	Colorado	2.51	7,020	Non
11	Galena, PbS	Oklahoma	2.45	6,864	Non
12	Chalcocite, Cu_2S	Alaska	2.34	6,552	Non
13	Sphalerite, ZnS	Oklahoma	3.06	8,580	RN
14	Niccolite, NiAs	Cobalt	2.78	7,800	Non
15	Pyrrhotite, Fe_5S_6 to $Fe_{16}S_{17}$	Canada	2.34	6,552	Non
16	Bornite, $Cu_2S \cdot CuS \cdot FeS$	Transvaal	1.67	4,680	Non
17	Chalcopyrite, $CuFeS_2$	Arizona	1.67	4,680	Non
18	Pyrite, FeS_2	Utah	2.78	7,800	Non
19	Smaltite, $CoAs_2$	Canada	2.28	6,396	Non
20	Marcasite, FeS_2	Oklahoma	1.95	5,460	Non
	HALIDES				
21	Halite, NaCl	Prussia	1.45	4,056	Non
22	Fluorite, CaF_2	Illinois	1.84	5,148	Non
23	Cryolite, Na_3AlF_6	Greenland	1.95	5,460	RP
	OXIDES				
24	Quartz, chert, SiO_2	Missouri	3.17	8,892	RN
25	Quartz, smoky, SiO_2	Colorado	3.45	9,672	RN
26	Quartz, flint, SiO_2	England	3.63	10,140	RN
27	Quartz, gold, SiO_2	Dakota	3.63	10,140	RN
28	Quartz, crystal, SiO_2	Brazil	4.80	13,416	RN
29	Quartz, milky, SiO_2	Pennsylvania	5.30	14,820	RN
30	Quartz, rose, SiO_2	S. Dakota	5.30	14,820	RN
31	Corundum, Al_2O_3	Transvaal	4.90	13,728	Non
32	Hematite, Fe_2O_3	England	2.23	6,240	Non
33	Ilmenite, $FeTiO_3$	India	2.51	7,020	Non
34	Magnetite sand, $FeO \cdot Fe_2O_3$	California	2.78	7,800	Non
35	Franklinite, $(Fe, Zn, Mn)O \cdot (Fe, Mn)_2O_3$	New Jersey	2.90	8,112	Non
36	Chromite, $FeCr_2O_4$	S. Rhodesia	2.01	5,616	Non
37	Rutile, TiO_2	Virginia	2.62	7,332	Non
38	Pyrolusite, MnO_2	New Mexico	1.67	4,680	Non
39	Manganite, MnO(OH)	California	2.01	5,616	Non
40	Limonite, $2Fe_2O_3 \cdot 3H_2O$	Alabama	3.06	8,580	Non
41	Bauxite, $Al_2O_3 \cdot 2H_2O$	Tennessee	3.06	8,580	RN
	CARBONATES				
42	Calcite, $CaCO_3$	Montana	3.90	10,920	RP
43	Calcite, $CaCO_3$	Missouri	3.90	10,920	RP
44	Dolomite, $CaMg(CO_3)_2$	New York	2.95	8,268	RP
45	Magnesite, $MgCO_3$	Greece	3.06	8,580	RP
46	Siderite, $FeCO_3$	Connecticut	2.56	7,176	Non
47	Rhodochrosite, $MnCO_3$	Montana	3.06	8,580	Non
48	Smithsonite, $ZnCO_3$	New Mexico	4.45	12,480	RN
49	Aragonite, $CaCO_3$	California	5.29	14,800	RP
	SILICATES				
50	Microcline, $KAlSi_3O_8$	Canada	2.67	7,488	Non
51	Oligoclase, $n(NaAlSi_3O_8)m(CaAl_2Si_2O_8)$	N. Carolina	2.23	6,240	RN
52	Labradorite, $(NaAlSi_3O_8)(CaAl_2Si_2O_8)_3$	Labrador	1.78	4,992	Non
53	Enstatite, $MgSiO_3$	Transvaal	2.78	7,800	RN
54	Pyroxene, $RSiO_3$	Canada	2.17	6,084	RN
55	Amphibole-hornblende, $Ca(Mg, Fe)_3(SiO_3)_4$	Canada	2.51	7,020	RN
56	Nephelite, $K_2Na_6Al_8Si_9O_{34}$	Canada	2.23	6,240	Non
57	Garnet, $R_3R_2(SiO_4)_3$	New York	6.45	18,000	Non
58	Rhodolite, $2Mg_3Al_2(SiO_4)_3Fe_3Al_2(SiO_4)_3$	N. Carolina	5.85	16,380	RP
59	Almandite, $Fe_3Al_2(SiO_4)_3$	New York	4.45	12,480	Non
60	Chrysolite, $(Mg, Fe)_2SiO_4$	N. Carolina	3.28	9,204	RP
61	Zircon, $ZrSiO_4$	N. Carolina	4.18	11,700	RN
62	Topaz, $(AlF)_2SiO_4$	Virginia	4.45	12,480	RP

Table 17. Relative empirical mineral conductivities—*Continued*

No.	Mineral and chemical composition	Source	Relative voltage	Voltage	Reversible *a*
	SILICATES—*Continued*				
63	Kyanite, Al_2SiO_5	Connecticut	3.28	9,204	Non
64	Axinite, $H(Ca, Fe, Mn)B(Al, Fe)_2(SiO_4)_4$	France	3.68	10,296	RN
65	Calamine, H_2ZnSiO_5	Missouri	3.23	9,048	Non
66	Tourmaline, $H_9Al_3(B \cdot OH)_2Si_4O_{19}$	California	2.56	7,176	RN
67	Muscovite, $(H, K)AlSiO_4$	Pennsylvania	1.06	2,964	RP
68	Lepidolite, $KLi[Al(OH, F)_2]Al(SiO_3)_3$	S. Dakota	1.78	4,992	Non
69	Biotite, $(H, K)_2(Mg, Fe)_2Al_2(SiO_4)_3$	Canada	1.73	4,836	Non
70	Serpentine, $H_4Mg_3Si_2O_9$	New York	2.17	6,084	RP
71	Talc, $H_2Mg_3(SiO_3)_4$	N. Carolina	2.34	6,552	Non
72	Kaolinite, $H_4Al_2Si_2O_9$	S. Carolina	2.39	6,708	RN
73	Bentonite	Wyoming	1.28	3,588	Non
	PHOSPHATES				
74	Monazite sand, $(Ce, La, Di)PO_4$	N. Carolina	2.34	6,552	Non
75	Apatite, $(CaF)Ca_4(PO_4)_3$	Canada	4.18	11,700	RP
	SULPHATES				
76	Barite, $BaSO_4$	S. Carolina	2.06	5,772	Non
77	Anhydrite, $CaSO_4$	N. Brunswick	2.78	7,800	RP
78	Gypsum, $CaSO_4 \cdot 2H_2O$	Michigan	2.73	7,644	RP
	TUNGSTATES-MOLYBDATES				
79	Wolframite, $(Fe, Mn)WO_4$	England	2.62	7,332	Non
80	Scheelite, $CaWO_4$	Nova Scotia	3.06	8,580	Non
81	Wulfenite, $PbMoO_4$	New Mexico	4.18	11,700	Non
	HYDROCARBON COMPOUNDS				
82	Anthracite	Pennsylvania	1.28	3,588	Non
83	Bituminous coal	Pennsylvania	1.45	4,056	RP
84	Bituminous coal, coking	Virginia	2.23	6,240	RP
	ARTIFICIAL ABRASIVES				
85	Aluminous oxide	New York	4.85	13,572	RP
86	Silicon carbide	New York	2.01	5,616	Non
	BEACH SANDS				
87	Rutile	Australia	2.67	7,488	Non
88	Zircon	Australia	3.96	11,076	RP
89	Rutile	India	3.18	8,892	Non
90	Zircon	India	3.96	11,076	RP

a Non = not reversible, RP = reversible positive, RN = reversible negative.

in path between conducting and nonconducting particles is attained by pinning the nonconducting particles to a movable charged roll, the conducting particles being repelled therefrom. In LOW-INTENSITY MACHINES pinning is at a minimum or is entirely absent, divergence due to repulsion is small, and separation is effected rather by close regulation of splitters coupled with repetitive treatment. In both machines time-factor is an essential element.

Sutton separator (Fig. 53) has a convergent electric field of high intensity developed between a grounded material-conveying electrode *A*, a charging electrode *B*, and the neon-tube electrode *C*. Electrode *A* is a brass cylinder, 6 in. diameter by 4 ft. long, fed by a Syntron-vibrated plate *D* from hopper *E*. Electrode *B* is a comblike structure parallel to *A*, comprising a rod provided with needlelike discharge points *F*; it is maintained at a high negative potential by connection to the secondary of a step-up transformer. The position of electrode *B* and the orientation of the discharge points are adjustable; the points are usually set a little above the line of centers of electrode *A* and rod *B*. A tube-type rectifier permits use of ordinary a-c. circuits. Power equipment is well insulated and enclosed; access thereto is through a door which automatically throws main power switch when opened. When tube electrode *C* is not energized the electric field between electrodes *A* and *B* is similar to the magnetic field shown in Fig. 14*b*. A similar though less convergent field exists between electrodes *A* and *C* when *B* is off. With both *B* and *C* energized, the lines of force terminating at electrode *A* are pushed together by mutual repulsion of the two fields.

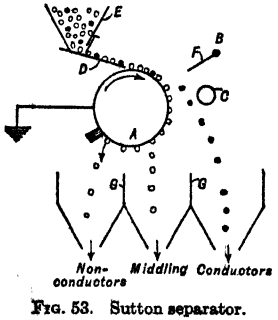

FIG. 53. Sutton separator.

Electrode *A*, rotating as indicated, carries a feed layer one particle deep into the electric field, where it receives an electron spray from *B*. The conducting particles lose electrons through grounded electrode *A* and are then attracted by *B* because of an induced polarization, and, possibly, through positive charging brought about by an oscillatory discharge caused by surface irregularity. Their trajectories are the resultants of the electrical and gravitational forces and their initial momenta. Nonconducting particles lose electrons very slowly to the grounded electrode, hence they remain or become negatively charged; a positive charge is induced in the region of the grounded electrode close to the particle, and as a result the nonconducting particle is pinned to this electrode. Thus held to the surface, the particle is carried by rotation of the electrode to a point beyond the action of the field, where it may fall by gravity, or to a point further on where it is mechanically brushed off the roll surface. After leaving the electrode *A*, conducting particles are still subject to electron bombardment and may again acquire a net negative charge, some of which tends to leak off through the air to the grounded electrode. If this reacquired negative charge becomes sufficiently great, the particles tend to be repelled by *B* and *C*. If the position of the particle with respect to *C* is such that the upward vertical component of the repulsive force exceeds the horizontal component toward *A*, the effect will be to lengthen the trajectory of the particle by decreasing the net downward pull thereon. It seems probable that this is the primary function of electrode *C;* this electrode undoubtedly also serves to attract conducting particles that for one reason or another escape the effect of electrode *B*. Adjustable knife edges *G* are set to divide the falling particles into conductors, nonconductors, and a middling.

Operation. Roll speeds range from 50 to 400 r.p.m., the higher speeds being used for the finer feeds and for feeds having a wide spread in electrical properties. Upper limiting speed is set by the effect of centrifugal force in loosening pinned particles. Speed is kept at the maximum allowable in order to prevent bouncing of feed particles. The following roll speeds are most commonly used (G. W. Jarman, Jr., *PC*): 20~28-m., 110 to 130 r.p.m.; 28~48-m., 150 to 190 r.p.m.; 48~65-m., 200 to 240 r.p.m., and 65~150-m., 250 to 400 r.p.m. Voltage of the charging electrode ranges from 15,000 to 20,000 v. depending upon the resistance to charging of the conducting particle. Current drawn across the air gap to the grounded electrode ranges from 0.0001 to 0.0003 amp. Power required for mechanical operations ranges from 1 to 1.5 hp. Capacity ranges from 1.5 to 2 t.p.h. per roll, being higher for the larger particles, for those of higher specific gravity, and for mixtures with the larger differences in conductivity. Series-operated rolls may be arranged to suit the individual requirements of the problem; the Y-type separator consists of four rolls; the first two operated in parallel make finished concentrate and a middling which is combined and scavenged by two rolls in series, the first of these making finished concentrate, the second a middling and a finished tailing. Feed must be within the range 8~150-m. and closely sized; closer sizing is required at the coarse end. Feed must be so prepared that surface condition of particles is proper for electrostatic separation. In all cases the surface must be dry; in some cases feed must be washed and even given a surface grind (scuff). Temperature of feed at conveying roll should be 150 to 180° F., but material is usually preheated to 220 to 250° F. and then allowed to cool to the lower temperature, in order to take advantage of any pyro- or piezoelectric charging. With feeds that are difficult to maintain at proper dryness, a gas- or oil-fired heating element is located within the hopper. Operating variables are roll speed, electrical potential, the position and orientation of the charging electrode, and the positions of the dividers.

Performance. The NORTON ABRASIVES Co. (G. W. Jarman, Jr., *PC*) uses two electrostatic separators in series to separate fused alumina from silicon carbide. Scrap abrasive wheels, etc., are crushed, washed to remove clay, and kiln-treated to remove resins and other bonding materials. Feed goes to the first roll, which makes finished alumina concentrate, finished silicon carbide concentrate, and a middling product which is treated by the second roll, which also makes three products. Middling from the second separation, about 3% of original feed, is returned to the first roll. Assays: feed 40% SiC, 60% Al_2O_3; carbide concentrate, 99.5% SiC; alumina concentrate, 98% Al_2O_3. Capacity is 3,500 to 4,000 lb. per hr. Other separations currently being made are rutile from zircon; scheelite from wolframite, ferberite, and hübnerite, but principally from pyrite; and stainless steel grindings from abrasive grain (*ibid.*).

Johnson separator, manufactured by the Ritter Products Corp. (Fig. 54), consists of an electrode *A* (CLASSIFYING ELECTRODE) which separates feed into two products of distinctly unequal sizes, each of which goes to a series of separating electrodes *B*. The grounded classifying and separating electrodes are cylinders of 3-in. diameter and 8-ft. length made of copper, brass, or stainless steel, the choice assertedly depending upon differences in the nature of the charge developed by friction between the feed and electrode surface. The similarly charged electrodes *C* are rods of about $\frac{1}{4}$-in. diameter. The charged electrodes *D* are brass cylinders about 1 in. in diameter and are rotated at 75 r.p.m. in the directions shown. Material fed onto the top of *A* is carried by its rotation into the electric field, where polarization of the particles is induced. The conducting particles with the higher induced moment are subject to an attractive force owing to the convergence of the field, or to an induced polarity of opposite sign. Under the combined actions of the electrical and gravitational forces and the momentum, the conducting

particles follow a trajectory which carries them beyond the normal gravitational trajectory. Since the attractive force depends upon the volume of the particle (see Eq. 35), the trajectory of the smaller of two particles of identical electrical properties deviates less from the normal trajectory. The nonconducting particles have normal gravitational trajectories, which are steeper for the smaller particles. By proper adjustment of dividing edge E, two roughly sized fractions may be made, the coarser particles in the fine fraction being nonconductors and the finer particles in the coarse fraction being conductors. These sized fractions proceed by gravity to electrodes B, where separation is effected. Metal-wool composition pads F serve to discharge any conducting particles which come to rest on the surfaces of electrodes D. Any electrical arrangement of electrode combinations B-D may be made to suit the separation. In the arrangement shown, the first four B-D combinations each side act as roughers to make a clean tailing; the last three as cleaners to make finished concentrate and a middling for retreatment. For small separators a tube-rectifying electrical set is used; for large installations using a single polarity on all charged electrodes a mechanical-rectifying set consisting of a motor, exciter, generator, and mechanical rectifiers mounted on a common shaft is used. The generator output is 110-v. single-phase current, which is stepped up by a transformer and then mechanically rectified. In a heavy-duty separator utilizing reversibility a double-polarity mechanical-rectifying set is used. Energizing power required by heavy-duty sets is 2 hp. starting and 1 1/4 hp. operating; these sets can service units handling 150 t.p.h.

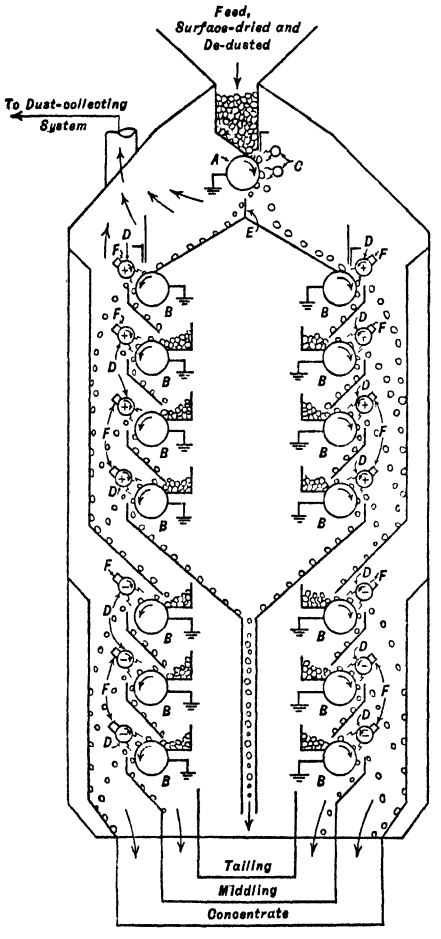

FIG. 54. Johnson separator.

Operation. Electrodes B are operated at 35 to 60 r.p.m.; the higher speeds are used for the finer feeds and for mixtures having a wide spread in conductivities. Potential of charged electrodes of roll A ranges from 3,000 to 6,000 v., of electrodes D from 5,000 to 18,000 v. Current flowing from electrodes D to rolls B averages 0.00005 amp. Power required for mechanical driving of each pair of electrodes is about 1/10 hp. Separating capacity ranges from 9 to 12 t.p.h. each side with 8-ft. rolls; classifying capacity from 25 to 30 t.p.h. Feed must be within the 10~150-m. range and closely sized. As in the Sutton machine, feed must be prepared by washing and desliming, if necessary, followed by surface drying; feed temperatures range from 150 to 270° F. Thickness of feed bed on rolls B ranges from 3/16 to 1/4 in., depending on particle size.

The polarity of electrodes D of the roughers may be the same as or different from that of the cleaner D electrodes, depending upon the reversibility characteristics of the mineral grains. Separation of a mixture of nonreversible minerals or a mixture of reversible minerals of opposite polarity is possible at any potential relative to which one mineral acts as a conductor and the other as a nonconductor, regardless of the polarity of electrodes D. For a mixture of two similarly reversible minerals separation is possible when electrodes D have polarity opposite to that of the minerals and a potential at which one mineral is conducting and the other is not. A mixture of a nonreversible and a reversible mineral is possible regardless of polarity of electrodes D when the nonreversible mineral is the better conductor. When the reversible mineral is the better conductor, electrodes D must have polarity opposite to the reversibility for separation. In all instances the polarity assigned to electrodes D is one for which the spread in conductivities is a maximum, *e.g.*, a mixture of a nonreversible mineral X, conducting at 5,000 v., and a reversible positive mineral Y, conducting at 5,500 v., shows a difference in conducting potentials of 500 v. when electrodes D are negatively charged, and 5,000 v. when elec-

trodes *D* are positively charged; hence the latter polarity would be used. In the series arrangement of the *D* electrodes a polarity consistent with the above restrictions and best suited to the separation is used; thus if the separating electrodes are used as roughers, such polarity is imposed as will make the valuable minerals behave as conductors; in cleaning, the polarity is chosen, if possible, so that gangue and middling act as conductors.

The only operating variables at the disposal of the operator are the polarity and potential of the charged electrodes; the other variables, *i.e.*, conveying electrode speed, position of charged electrodes, and position of dividers, are set by the manufacturer at the time of the installation and locked to prevent change in the settings.

Performance. At the Pierce, Florida, plant of the AMERICAN AGRICULTURAL CHEMICAL Co. two double 9-electrode separators are used to upgrade phosphate-flotation concentrate. The first six electrodes, acting as roughers, are positively charged to a potential of 15,000 v.; the last three, acting as cleaners (middlings are recirculated), are also positively charged, but to a potential of 17,000 v. All rolls *B* run at 35 r.p.m. Each duplex separator has an operating capacity of 16.8 t.p.h. (average of a 6-month period) and produces 16.1 t.p.h. of concentrate. Feed size is <35-m.; temperature 165° F. Operation is continuous. Time loss chargeable to the separator is well under 1%. No labor is required unless the separator is to be shut down or started up. Assays as per cent. B.P.L.: feed, 71.74; concentrate, 76.89; tailing, 14.86. Insoluble in feed is 11.97%; in concentrate, 5.44%. Recovery of B.P.L. is 98.3%, ratio of concentration 1.1 : 1. Two double 9-electrode separators are also used to concentrate washed matrix. Electrodes are arranged as for concentrate but are negatively charged to 15,000 and 17,000 v. All other conditions are the same as for the concentrate separators. Capacity per duplex unit is 26.1 t.p.h. making 18.5 t.p.h. of concentrate. Assays as per cent. B.P.L.: feed, 56.6; concentrate, 71.9; tailing, 19.7. Assays as per cent. insoluble: feed, 29.7; concentrate, 11.2. Recovery, 89.9. Ratio of concentration, 1.4 : 1.

At the Libby, Montana, plant of the UNIVERSAL ZONOLITE INSULATING Co. (H. B. Johnson, *PC*) two double 12-electrode separators are used to separate vermiculite from a gangue consisting principally of kyanite and pyroxenite. The first nine electrodes are used as roughers, the last three as cleaners; middlings are recirculated. Conveying electrodes are run at 35 r.p.m. Feed to the separators is sized into 6~28-m. and <28-m. fractions, each fraction going to a separate unit; temperature of feed is 250° F. Capacity of each unit is about 12 t.p.h. The kyanite and pyroxenite are both reversible negative, hence charging electrodes may be charged positively or negatively, a positive charge giving somewhat better results. When the electrodes are negatively charged, the coarse-ore separator is operated at 18,000 v. and the fine at 15,000 v.; when electrodes are positively charged, coarse-ore separator is operated at 16,000 v. and the fine at 12,000 v. Concentrates contain 3 to 6% moisture. Assays as per cent. vermiculite: feed, 32%; concentrate, 96%; tailing, 2.5%. Recovery is 96% and ratio of concentration is 3 : 1.

Other electrostatic separations currently practiced (*ibid.*) are: grindings from abrasives, silicon carbide from aluminous abrasives, rutile from zircon, separation of chemical salts, and the cleaning of various food products.

SECTION 14

MISCELLANEOUS METHODS OF CONCENTRATION

ART.		PAGE
	HAND SORTING	
1.	Introduction	01
2.	Sorting surfaces	02
3.	Operation	05
4.	Mechanical pickers	09
	AMALGAMATION	
5.	Principles of amalgamation	10
6.	Plate amalgamation	12
7.	Pocket amalgamators	18
8.	Grinding amalgamators	18
9.	Retorting and melting	21
10.	Performance	22
11.	Differential disintegration	23
12.	Differential phase change	24

The methods of concentration grouped in this section are unrelated on any logical ground except, perhaps, that they are limited in utility, either on the score of limited applicability or limited efficiency or both, and hence constitute a part only—and that usually minor—in any given treatment scheme. They utilize a considerable variety of mineral properties. Thus hand sorting is dependent on one or more of the characteristics, color, luster, shape, grain size, and specific gravity of the materials comprising the crude; amalgamation depends upon the differences in solubility of the ore minerals in mercury; differential grinding depends upon differences in hardness and toughness and is closely allied in principle to scrubbing and washing (Sec. 10); separation by means of decrepitation is closely related to the foregoing method, in that it also depends upon differences in response to a disintegrative force, in this case heat; liquation and retorting likewise depend on differential responses to heat, the first in respect to melting point and the second to boiling point.

HAND SORTING

1. INTRODUCTION

Hand sorting or HAND PICKING is manual removal of selected grades of material from a mass of broken ore. A concentrate of high-grade or SHIPPING ORE is one of the grades commonly selected. Such material may be worth more per ton, on account of its size, than mill concentrate, and, if taken thus early, is not subject to the loss attendant on further treatment. Tailing or WASTE for rejection is likewise frequently made. The advantages of this practice are: (*a*) saving the cost of milling waste, (*b*) increased capacity from a given mill equipment, (*c*) increase in the possible mining rate, and (*d*) reduction in wear on mill equipment. Even if increased capacity is not utilized, there may be marked increase in efficiency because of the reduction in load on the mill. Sometimes both shipping ore and waste are picked at the same operation and a third class, *viz.*, MILLING ORE, requiring mechanical treatment, is the residue. High-grade complex ores may be picked into several classes; as many as 16 have been made at one time at CLAUSTHAL (*4 SMQ 196*). Such close work requires breaking with hammers in addition to the actual sorting (see Sec. 4, Art. 11).

Sledging, spalling, and cobbing are rarely practiced in the United States except around prospects and one-man mines, but they are established practice in many countries where labor is cheaper. At certain CORNWALL mines picking and cobbing produced (*a*) rich copper pyrite, (*b*) coarse rich galena, and (*c*) coarse rich blende, all of which were sent directly to the smelters; (*d*) fine tin oxide, (*e*) pyritiferous milling ore, (*f*) waste. At CLAUSTHAL (1880–1884) six products were made from the original ore, *viz.*: (*a*) copper pyrite, nearly pure, (*b*) mixed copper-iron pyrite with copper predominating, (*c*) the same with iron predominating, (*d*) iron pyrite, nearly pure, (*e*) pyritiferous milling rock, (*f*) pyrite-chalcopyrite-galena-blende-gangue middling. The first four were sold to smelters, the fifth milled, and the sixth further cobbed by expert workmen, producing: (*g*) galena, (*h*) mixed copper and iron pyrite (distributed between (*b*) and (*c*)), (*i*) intergrown pyrite and galena, (*j*) galena milling rock, (*k*) pyritiferous milling rock, (*l*) mixed pyrite and blende. Lots (*i*), (*j*), and (*k*) were accumulated

and milled separately; (*l*) was further cobbed. These are extreme cases, but they resulted in salable or treatable products from an ore from which such products could then be made only with extreme difficulty, if at all.

When the ore-treatment process is chemical, sorting may be resorted to to remove deleterious substances, such as those that consume chemicals, hinder settling and filtration, absorb and carry valuable solutes into tailing, etc.

Apart from the necessity for removing refuse such as rope, wood, steel, dynamite, etc., from any mill feed, and dangerously deleterious substances from feed to chemical ore-treatment processes, the decision as to the advisability and extent of sorting is purely economic. The cheaper the labor and the more inefficient and expensive the mechanical treatment, the further sorting can be carried and *vice versa*. Undoubtedly sorting could be introduced with advantage in many plants, but just as undoubtedly it is being practiced in some places where economy demands its discard or curtailment. For formulas applying to the economics of sorting, see Sec. 19, Art. 24.

Sorting of some kind is a part of every mining and ore-treatment operation. In narrow ore bodies with distinct walls, much of the country rock that is unavoidably broken in mining is sorted out underground and left at some convenient place, or used for filling. In certain mines in which the ore contains segregated masses of pure valuable mineral, as in some of the Lake Superior native-copper deposits, at DOME, etc., coarse valuable mineral is picked out underground and sent to the surface separately. In general, however, underground sorting is uneconomical on account of restricted working places, poor lighting, poor presentation of material, and the obscuring effect of the fine dirt present. Some sorting to remove wood, rope ends, powder, and tramp steel is done ahead of the primary crusher in practically all mills. This work is, however, incidental to crusher operation and is hardly to be considered as a part of the general problem, although many tons may be sorted daily, *e.g.*, at MIAMI, and the sorted material may carry recoverable value, as at INTERNATIONAL NICKEL.

Picking is much more common with nonmetallic crudes than with metalliferous ores. Whenever valuable mineral occurs as coarse aggregates, or when considerable waste is mined and the mineral and gangue or milling ore and waste are readily distinguishable by eye, the economics of sorting should be investigated. If there is an appreciable difference in specific gravities between valuable and waste minerals, it may be cheaper to sort by heavy suspensoids (Sec. 11, Art. 28).

2. SORTING SURFACES

Sorting is performed on floors, stationary tables, and grizzlies, and on various sorts of moving surfaces such as revolving tables, conveyors of the pan or belt variety (see Sec. 18), and shaking surfaces such as shaking feeders or shaking screens or grizzlies. In modern practice in United States and on the Rand the material fed to sorting surfaces is prepared mechanically and there is little or no breaking during sorting, but in European and some Latin American mills considerable breaking (spalling and cobbing) of the ore is done during sorting (*ante*).

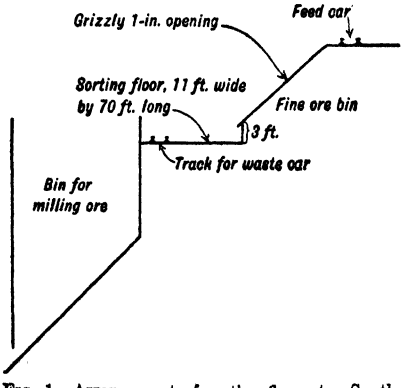

FIG. 1. Arrangement of sorting floor at a South African cyanide plant.

Floors are used for sorting where labor is cheap or where spalling and cobbing are practiced. In its crudest form a sorting floor is any level space with a surface that can be swept up thoroughly, on which the ore to be sorted is dumped and picked over. The usual practice in such sorting yards is to let the work on contract, assigning to each contractor a certain space on the floor, delivery of feed and collection of products being made by the company. With coarsely aggregated complex sulphide ores, such as the German and Austrian lead-zinc-iron ores, Cornish tin ores, and certain Bolivian tin ores, it is possible by such methods to get out high-grade salable concentrates that could not be separated, or could be separated only at great expense, after grinding. The costs of such work are so variable and so dependent on the ore, the products required, and on local custom as to be entirely unreliable for quotation. Sorting floors

were carried to their highest development at some of the Rand gold mines, but have long been superseded by mechanical means for presentation to the sorters and for removal of nonselected material.

Fig. 1 shows one arrangement. The floor was covered with 1/2-in. steel plate. About 550 tons per 24 hr. was fed over the grizzlies by two men per shift. Nine men per shift on the floor dragged the oversize out with heavy 2-pronged rakes, washed it, did some sledging, sorted out about 70 tons of waste per shift, and threw this into cars on the floor, while coarse milling ore was shoveled over into the coarse ore bin at a cost (1896) of about 35¢ per ton sorted. Waste was quartzite and some slate, the ore a cemented conglomerate.

Similar arrangements are relatively common at mines at which ores of residual types are mined, *e.g.*, barite, rock phosphate, and manganese; and either high-grade, milling ore, or waste may be present in separate lumps of considerable size. See Sec. 2, Fig. 135.

The DISADVANTAGES of floors are that all material must be moved manually and that the sorters must work in a stooping position, which is tiring. The ADVANTAGE is thorough inspection, since every piece of material must be turned over and the pickers are not unduly hurried.

Table for sorting is shown in Fig. 2. Feed is delivered by cars or wheel barrows running on the floor at the left and is dumped onto a perforated plate submerged 1 or 2 in. in water in tank *A*. Shovelers standing on this plate work fines through the screen and wash the coarse oversize, then shovel it onto the inclined table *B*. Pickers sitting on plank *C* remove whichever separable component of the feed is present in smallest bulk and drop it below them into proper receptacles, finally scraping the residue through the opening into the tank below *B*.

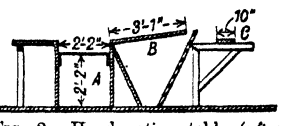

FIG. 2. Hand-sorting table (*after Richards*).

For sorting on a small scale a punched-plate screen set horizontally on horses or the like is recommended as superior to a floor or table (*106 J 412*). It saves stooping, screens out, during the sorting operation, material too small to pick, and the reject is readily hoed off at one end.

Fixed chutes and grizzlies for sorting are of the usual types with the limitations, however, that their slope shall be near the sliding angle of the material (see Sec. 18, Art. 15, and Sec. 7, Table 20) and that the width shall not exceed that readily inspected and worked, *viz.*: about 24 to 30 in. when worked from one side and 48 in. when worked from both sides. If the slope is less than the sliding angle, material is worked along with rake or hoe; if more, the flow is stopped as desired by a board, hoe or shovel inserted into the stream. Such sorting surfaces are not used when a large percentage of the total material is to be removed or when close sorting is desired. They serve principally when rope, wood, powder and steel are being taken out of the primary-crusher feed in order to obviate trouble in the mill. A grizzly makes selection easier than a chute because of removal of fines, but if the particles are tabular or wedge-shaped, the grizzly clogs badly at the low speeds at which material passes and it is, consequently, difficult to control the movement of material.

A sorting grizzly of adjustable slope used at the PORT HENRY IRON ORE CO. at Mineville, N. Y., is shown in Fig. 19, Sec. 7.

Moving surfaces for sorting include belt and pan conveyors, revolving tables, and shaking chutes and screens. Such surfaces have the advantage that manual handling of rejected material is eliminated, but this rejected material is not turned over by or for the picker and material is therefore passed through oversight that should be removed. Further, all material passes at a given uniform rate, irrespective of the content of material that should be removed, with the result that pickers are, at certain times, hurried beyond their capacity and at other times are underworked, if the average speed of travel is right. Notwithstanding these drawbacks, most hand sorting at present is done on movable surfaces because of the advantage of mechanical transport of the reject.

Belt conveyors (see Sec. 18, Art. 6) are the most usual picking surfaces. Belts are commonly 24 to 30 in. wide for a single row of pickers and 36 to 48 in. wide for a double row. Stations for operators are placed 3 to 6 ft. apart along the belt, and chutes are provided at each station for receiving the material removed. These chutes are placed beside the picker or on the opposite side of the belt. It is probable that chutes on the opposite side are best for material up to 3- or 4-in. that can be thrown by a flick of the wrist, but pieces that need two hands are best drawn toward the picker, and it is probably less tiring to draw one-hand pieces larger than 4-in. to the picker's side than to throw them away. Chute mouths should be so large that accurate throwing is not necessary and of such conformation that pieces will not tend to bound out. Speed of belts ranges between 10 and 80 f.p.m.; the average speed is between 30 and 40 f.p.m. The more

difficult the job, *i.e.*, the smaller the pieces and the greater the amount to be removed, the slower the speed and the longer the belt.

Tuttle (*17 SMQ 396*) states that coal-picking belts are usually 4 ft. wide and run at 30 to 60 f.p.m. For picking oversize of a 1 1/2-in. screen at 30 tons feed per hr. he recommends a belt length of 15 ft. plus 10 ft. for each 3% of material removed. On 3/4- to 1 1/2-in. sizes he recommends 30 f.p.m. belt travel and, for a feed rate of 20 t.p.h., 15 ft. of belt for every 1.5% of material removed. For more than 4 to 6% of impurity he recommends washing rather than picking.

The belt should be troughed as little as possible to prevent heaping up in the middle. In many cases a wide flat belt with feed coming on not nearer than 6 in. from the edges is used. A belt conveyor is suitable as a sorting surface for any size of material that can be handled by the pickers, but it will not stand any considerable amount of sledging, and wears excessively with feed coarser than 6- to 8-in. particularly when, as should be the case, the fine material has been screened out. It may be set on a slope not to exceed 20°, and should be sloped somewhat to permit drainage from washed feeds.

For performances see Art. 3.

Pan conveyor (see Sec. 18, Art. 7) is used for coarse material. The arrangement is similar to that described for belts. The speed is usually slower, both for mechanical reasons and because larger lumps are handled. A pan conveyor will stand sledging and is less subject than belts to wear from large lumps. The best form for sorting is one forming the bottom of a shallow trough, which has, therefore, stationary sides. This permits removal of large heavy lumps more readily than when articulated sides form part of the moving mechanism. At SHULER COAL CO. (*21 CA 1077*), a picking pan conveyor 72 in. wide was run at 50 f.p.m.; it spread run-of-mine bituminous coal about 8 in. deep.

Pan conveyors, if beaded or the equivalent, may be set on slopes up to 30°, although material will pile up somewhat against the beads and not be so well presented as on flatter slopes.

The conveyor may be partitioned longitudinally, *e.g.*, into three strips, with loading onto, say, the two outside strips, and a picked product thrown into the unloaded strip for delivery into a separate pocket at the end.

Revolving table. One form is shown in Fig. 3. A metal picking surface (usually inclined toward one edge) is carried on a structural frame with a circular track running on suitably placed wheels on the supporting frame. The platform is revolved by means of gear and pinion. Feed is introduced through chute *A*, pickers stand or sit at suitably placed stations around the outer and inner peripheries and throw material removed into appropriate chutes or other receptacles. Reject is removed by a scraper *B* and falls into chute *C*. Some tables are supported by ribs from a central spindle, which prevents picking stations on the inner periphery. The usual outside diameter ranges from 16 to 25 ft.; speed is usually between 20 and 40 f.p.m. Some tables are double-decked. The upper deck is about half the width of the lower and 6 in. higher; it receives the selected material, thus presenting both reject and selected material to the inspector.

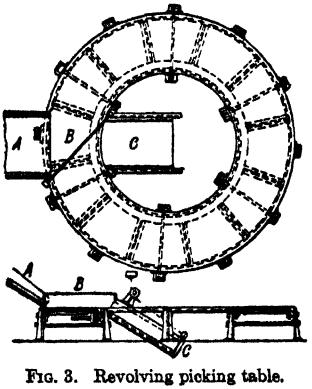

FIG. 3. Revolving picking table.

Revolving tables have been largely used in South Africa and in Europe, but installations in the United States are rare. German tables are 12 to 15 ft. diam., and 12 to 16 pickers work at each table. The cost of sorting on revolving tables on the Rand, where the feed is washed oversize of 1.5- or 2-in. screen, averaging 3-in. size, was 18 to 50¢ per ton, pre-1914. (Truscott, *Witwatersrand gold fields*, p. 413.)

The ADVANTAGES are compactness with consequent ease of supervision and collection of products; DISADVANTAGE, as compared to rectilinear conveyors, is the loss of elevation suffered by the reject.

Shaking surfaces have been used widely in collieries, but, except as primary-crusher feeders have not been used to any extent in metal-treatment plants. They are essentially chutes with perforate or imperforate bottoms, set on an incline of about 10° in the direction of flow and shaken at 100 to 250@ 2- to 6-in. throws per min. by a simple eccentric. With the Ferraris method of suspension by means of short struts or hangers inclined backward about 15° from the vertical, or with a differential head motion (*e.g.*, Marcus screen) the picking surface may be horizontal. Limitations of width and the arrangement of receptacles are the same as previously discussed.

These are the least satisfactory of the movable picking surfaces for careful picking, but when screen bottoms are used, they serve the triple purpose of screens, conveyors and sorting surfaces and thus justify themselves.

3. OPERATION

Material picked should be that present in least amount in the feed, thus leaving the larger bulk unhandled. Wiard (*112 J 328*) recommends removing ore (one or two classes as the case may be) whenever the tonnages of ore and waste are approximately equal. His argument is that this puts a single and easily defined responsibility on the picker, *viz.*: to remove everything that looks like ore, and makes inspection of the products more simple.

Washing of feed is essential to rapid and accurate sorting. It is usually done in the trommels or vibrating screens removing oversize, but may be done by hose or sprays on chutes, grizzlies, floors, or moving sorting surfaces. Spray water run on to a troughed inclined belt just above the feed point will wash fines down the incline and over the tail pulley where they can be collected in a suitable receptacle. See Secs. 7, 10.

Performances at various mills are given in Table 1.

Handy (*61 A 224*) states that the labor in a typical COEUR D'ALENE sorting plant, in which 800 tons per day, sorted at 1.5- to 4-in. size, yielded 50 tons shipping ore and 150 tons waste, consisted of 20 sorters with 5 bosses and repair men. The normal cost (1917) was 16¢ per ton of run-of-mine rock or 65¢ per ton sorted out. Picking coal on belts in English fields, with the percentage removed ranging from 2.1 to 17.5, the tons picked per worker per hour ranged from 0.03 to 0.35, with the highest tonnage corresponding to the greatest percentage removed; there was general, though not exact, adherence to this rule. (*Louis, p. 98.*) Huntoon (*93 J 53*) gave the COST of sorting 15 to 20% of waste from belts at TONOPAH BELMONT at $0.68 per ton of waste and at TONOPAH MINING CO., $0.80 per ton removed when this comprised 11% of the feed. At INTERNATIONAL NICKEL (*58 CMJ 665*) 7 pickers per shift removed 25 to 30 tons wood per 24 hr. This was burned and high-nickel ash was added to nickel concentrate. Wood chip was blown from belts in roll circuit by fishtail jets to prevent accumulation in circuit and blinding of screens. At HECLA (*IC 6600*), sorting 8~3-in. crude ore on a belt, each sorter removed 12 tons of 50% (Pb) smelting ore, or 25 tons waste per shift at a cost of 20¢ per ton for waste and 35¢ per ton for high-grade ore. At HANNAN'S NORTH, Kalgoorlie (*31 CEMR 333*) 9~1 3/4-in crude was picked on a 3×18-ft. Ferraris table; 22% waste rock was picked off at the rate of 2 t.p.h. per man.

Amount removed by sorting varies according to the ore treated.

With native-copper ores of Lake Superior the amount was as small as 0.001% of the whole at COPPER RANGE. At FEDERAL MINING & SMELTING CO. lead mines and at WITHERBEE SHERMAN magnetite mines 20% total high-grade ore and waste were removed. On the RAND (*20 IMM 307*) material from 8-in. to 1.75-in. constituted 50 to 70% of all rock hoisted. Waste picked out of this varied from 10 to 30% of the total hoisted, averaging about 16%. This constituted about 50% of the total waste hoisted. In IDAHO mills treating coarsely disseminated lead ores, shipping ore picked out varied up to 60% of the total concentrate produced. At SULPHUR BANK (*IC 6429*) 60% of 300 t.p.d. was discarded as waste at 9~1-in. on a 36-in.×40-ft. belt at 40 f.p.m.

Labor is generally that unfit for any heavier work—boys, girls, women, or old or crippled men. Boys and girls are the quicker and, if properly supervised, most satisfactory.

Size of material sorted ranges on the average from 2.5- to 12-in.

Smelting ore as fine as 0.75-in. was picked at the old Morenci plant of PHELPS DODGE and as coarse as 24-in. at the Ogdensburg plant of N. J. ZINC CO., but the number of moves necessary to make tonnage on the small sizes is so great that the capacity of pickers is low, and difficulty in deciding about and handling 24-in. lumps is likely also to slow the operation down below the rate on intermediate sizes. Wiard states (*112 P 327*) that the best size range for sorting is between 1- and 3-in. Richards (*TB 196*) estimates the maximum rate to be on 3- to 4-in. lumps, but Table 1 shows that maximum tonnages per man-hour correspond to feed averaging 6- to 12-in. Comparison between FEDERAL M. & S. CO. and WITHERBEE SHERMAN (Table 1) is particularly instructive since at both mines 20% of the feed was picked as shipping ore and waste and the number of pickers indicates sorting to have been the sole responsibility of the workers. At WITHERBEE SHERMAN 5 tons per man-hour of 4- to 16-in. material was picked against 0.34 ton per man-hour of 1- to 6-in. material at the Federal plant. The high tonnages on coarse material at ALASKA-JUNEAU correspond to easy decision.

Cost of hand picking bituminous coal at different sizes was thoroughly investigated by U. S. COAL & COKE CO. (*Am. I. & S. Inst., 1921*). With labor at $0.55 per hr., the costs per ton, including interest and depreciation on the investment in sizing and picking machinery, for picking at various sizes were as shown in Table 2.

Lighting. An extensive investigation of lighting for picking was made in South Africa, the engineers of the mines and of lamp manufacturers collaborating (*59 MM 234*). Conclusions were that early-morning daylight had a better quality for sorting purposes than afternoon light, and that light from daylight-blue gas-filled lamps made discrimination

Table 1. Performances in hand sorting

Item	Copper Range	Britannia *b*	Phelps-Dodge	Alaska-Juneau *h*		Crown Mines	Elko Prince	Gold Road	Preston East Dome *q*	Rand, General *x*
Kind of ore	Cu	CuS *d*	CuS	Au–Ag	Au–Ag	Au–Ag	Au–Ag	Au–Ag	Au–Ag	Au–Ag
Material picked	Cu *a*	*e, f*	*g*	Ore *j*	Ore *j*	Tailing *o*	Tailing	*p*	Tailing *r*	Tailing
Size of material, in.	12~6	3 1/2~1 1/2	3~3/4	8~4	4~3	R.o.m. > 1 1/2	7~2	R.o.m.	R.o.m. > 2 1/2	8~2 *ac*
Picking surface: Kind	Chute	Belt	Belt	Belt	Belt	Belt	Belt	Belt	Belt	Belt
Width, in.			36	42	42		30	36	42	36
Length, ft.							8		40	
Slope, i.p.f.	6		2 3/8	Level	Level	2 1/2		2	*s*	*y*
Speed, f.p.m.				100	150	100	20	60	25	40
Pickers: No.	1	4	4	4 *l*		19 *n*	1	4	4 *t*	
Spacing, ft.			6	*m*	*m*	3.8		3	5	3 *z*
Length of throw, ft.			6			*n*	1 1/2		*u*	*u*
Tons per man-hr.	0.055	0.15 *e*	0.33	10 to 12.5		3.7	0.16 to 0.25	1.3	2.3	0.67
Percentage removed	0.001	5 to 10	0.7	19.5		17.4	10		17 *w*	*ab*
Assays: Feed		2.7% Cu *c*		$1.10 *k*					0.32 oz.	
Selected material		10 to 18% Cu *e*		$1.92		0.28 dwt.			0.020 oz. *v*	0.4 dwt.
Material left				19¢						
Cost				*l*						1 shil. *aa*

Item	Tonapah-Belmont	United Eastern	Witherbee Sherman	Cons. M. & S. Co.	Fed. M. & S. Co.	Timber Butte	Falconbridge	Interstate Zinc & Lead *ag*	N. J. Zinc	
									Zinc	
Kind of ore	Au–Ag	Au–Ag	Fe *ao*	Pb–Zn	Pb–Zn	Pb–Zn	Ni	Zn	*am*	*am*
Material picked	Tailing	Tailing	*ap*	Refuse *ae*	*ap*	Tailing *al*	Tailing *al*	Ore	18~3	3~1 1/2
Size of material, in.	9~2		16~4	8~3	6~1	12~3	<6	6~3; 3~1 3/4	Rev. table	Belt
Picking surface: Kind	Belt *ad*	Pan conv.	Flight conv.	Belt	Belt	Pan conv.	Belt	2 belts		
Width, in.		42			36		48	36		
Length, ft.					88			22		
Slope, i.p.f.	1 1/4	Level	Level	20°	1 1/4	3 7/8	Level		Level	2
Speed, f.p.m.	45	1.5	200	65	43	30	57		30	122
Pickers: No.	7	1	7	2	10	1	2	*ah*	2	1
Spacing, ft.	4		3		4		6		25	
Length of throw, ft.	1	5	2		1.5	1	2		2	2
Tons per man-hr.	1.5	0.75	5	*af*	0.34	0.62	1.5		0.2	
Percentage removed	15	1.8 to 2.2	20		20	1	1.5	*ai*	0.13	
Assays: Feed									*an*	
Selected material							Cu, 0.32%; Ni, 0.21%		1.5% Zn	
Material left								*aj*	22% Zn	
Cost								9 to 11¢ *ak*		

Notes to Table 1:

a Mass.
b 113 P 695.
c 8% Fe, 1.5% Zn, 6% S, 70% SiO_2.
d In chloritic schist.
e Shipping ore.
f Pebble rock.
g Smelting ore.
h IC 6236; 131 J 369.
i On each of 3 belts.
j Quartz and any pieces of quartz-bearing rock picked from black slate and gabbro.
k R.o.m. ($20 gold).
l 3.3 to 4.2¢ per ton of rejected material for picking only (1926 to 1929); mill cost per ton milled, 3 to 33¢.
m The distribution of material on the primary belts averaged 0.95 ton per 350 sq. ft. of belt, and 0.19 t.p.m. per belt was removed; on the secondary belts the distribution was 0.57 ton per 525 sq. ft. of belt, with 0.14 t.p.m. per belt removed.
n Dropped onto return run of belt; 2 pickers on return run scavenge milling ore.
o Lump reef for tube mills picked from discharge end of belt.
p Primarily waste rock; also considerable timber, steel, and other mine refuse. Oversize boulders are taken off, broken, and returned to eliminate clogging of chutes.
q 62 CMJ 535.
r Comprises greenstone, dark mineralized porphyry, and light unmineralized porphyry; quartz and light mineralized porphyry remain.
s First 15 ft. sloped 18° and troughed to permit washing; balance slopes 5°.
t 2 each side.
u Dropped into chutes alongside.
v Mill tailing assays 0.009 oz. Max. economic value of waste removed (1941 prices and allowances) is 0.024 oz.
w Of ore hoisted.
x 44 IMM 479.
y 12° on picking portion, at least 18° on washing portion.
z Pickers both sides.
aa Per ton of material removed.
ab Fell steadily from 17.3% in 1905 to 7.8% in 1919 and then rose steadily to 13.1% in 1933; this is about 20% of material on belt. About 14% is sorted underground.
ac Usual, but some modern plants 3~3/4-in.
ad Steel.
ae Picking waste rock proved uneconomical.
af Part time only.
ag IC 6666.
ah 3 or 4 each side of each belt.
ai Material remaining on belt is 40 to 50% of material hoisted.
aj 0.3 to 0.4% Zn; mill tailing, 0.6 to 0.8% Zn.
ak Per ton of material fed to belt.
al Also refuse.
am Refuse plus as much waste rock as the crew can take.
an Waste rock.
ao Magnetite.
ap Lump concentrate and waste.

easier than light from vacuum-type lamps. It was found that there were appreciable differences in the assays of selected and rejected materials with variations in intensity and character of daylight, and that the changes in selection were gradual and largely unconscious on the part of the sorters. On the basis of this observation, and correlation thereof with the intensities of lighting at which changes in results first began to appear, artificial lighting was arranged for actuation by photoelectric cells so as to cut in artificial light whenever belt illumination fell below 150 ft.-candles and to maintain artificial illumination at a minimum of 160 ft.-candles. Special rectangular reflectors were designed to throw light along the belt but to cut lateral light off below the level of the sorters' eyes. Using 400-watt Osira electric-discharge lamps and reflectors at 4 1/2 ft. above the belts and spaced on 10-ft. centers, the desired light distribution was attained.

Table 2. Cost of hand picking at different sizes (*After O'Toole*)

Size, inches		Cost, dollars per ton of run-of-mine coal
Through	On	
.....	4	0.22
4	1 1/2	1.01
1 1/2	1	4.55
1	3/4	7.81
1	1/2	9.88
1/2	3/8	27.63
3/8	3/16	164.38

At Preston East Dome (*62 CMJ 535*) lights are 6 @ 48-in. 40-watt daylight fluorescent mercury-vapor lamps, hooded to about neck level of the operators, and thus 12 to 14 in. above the surface of material on the belt. The mercury-vapor lamps have been widely adopted for coal picking; Mazda Day-blue and Skylight lamps are also used; ordinary incandescent lights have largely disappeared from picking stations.

Table 3. Colors of various minerals under different lights (*After Egeler*) a

Ore	Red filter (Mazda)	Sodium	Mazda	Daylight Mazda	Mazda and high-intensity mercury-vapor	High-intensity mercury-vapor
Chalcocite	Red specular	Gray-black; yellow specular	(4) Silver gray	(3) Darker silver gray	(2) Darker silver gray	(1) Purplish hue on deep gray
Covellite	Black	Black	(3) Deep purple	(2) Lighter purple	(2) Deep purple	(1) or (2) Deep purple
Chalcopyrite	Dull red sheen	Green-gold sheen	Yellow brass	Yellow brass; slight hue changes	Greenish gold	(1) Brightest green gold hues, most vivid
Chalcopyrite, bornite, malachite	Pink and gray; malachite gray	Golden gray	Chalcopyrite, yellow brass; bornite, purple; malachite, yellow-green	(2) Same except bornite stands out better	Bornite less purple; malachite brighter green	(1) Malachite bright green. Very contrasty for malachite
Chalcopyrite with bornite	Flat reddish hue	Dull yellow-green with highlights	(2) Purple and dull bronze hues	Purple and yellow brass	Purple and yellow brass	(1) Purple and green contrasting hues with yellow-green highlights
Pyrite	Pink gray with highlights	Yellow with highlights	(3) Deep yellow hue with highlights	(2) Darker yellow with highlights	Yellow, slight green, with highlights	(1) Yellow and deep silver with more vivid highlights
Galena	Black and red specular	Black and yellow specular	(1) Gray-black specular	Gray-black specular	Gray-black specular	(1) Gray-black specular
Sphalerite	Reddish hue, little contrast	Yellowish hue, little contrast	(1) Rich brown and black	Brown	Still lighter brown	(1) Yellow-green
Sphalerite and galena	Black	Greenish black	(1) Gray and brown	(2) Gray and lighter brown	Gray and greenish brown	(2) Gray and greenish brown
Hematite	Gray with black spots	Dull olive with black spots	Brown-black with highlights	Lighter brown-black with highlights	Pale brown, deep choc. with highlights	Pale greenish brown with highlights
Hematite and slate	Black (slate) and pink	Deep olive	(2) Hematite brown-black. Slate gray-black	(1) Hematite lighter brown-black. Slate gray-black	Green-brown, black	(1) Green-brown and gray-black

a Numbers in parenthesis indicate order of observers' preferences.

Colored lights affect the appearances of different minerals differently. Hence a light that produces excellent contrast for one ore may not be the best for another. This is brought out by Table 3 (Egeler, *60 CMJ 16*).

Fluorescent light is particularly useful in the case of certain minerals. For a list of fluorescent minerals and their colors see Sec. 19, Art. 9.

Economics of sorting may be analyzed by the methods of Sec. 19, Art. 24. The essential element in such analysis is to compare the monetary yield per unit of production (*e.g.*, ounce of gold, pound of copper) after all charges and allowances. An example of an analysis for the COLD SPRING mine, Nederland, Colo. (W. O. Vanderburg, *IC 6673*), follows:

Example. Run-of-mine ore contains 0.9% WO_3; value at $12 per unit is $10.80 per ton. Sorted ore contains 5.72% WO_3; value per ton, $68.64. Waste rejected in sorting assays 0.025% WO_3, with a tungsten value of 30¢ per ton. Let x = number of tons from which one ton of sorted ore can be produced, and y = number of tons rejected per ton of sorted ore. Then $68.64 + 0.30\,y = 10.80\,x$, and $x - y = 1$. By simultaneous solution, $x = 6.51$ tons r.o.m. per ton of sorted ore milled, and $y = 5.51$ tons waste discarded. Cost of sorting out one ton of milling ore is $1.95. Cost of mining is $2.34 per ton. Transport from mine to mill costs $1 per ton. Milling cost on r.o.m. is $2.85 per ton, and on sorted ore is $3.22 per ton. Recovery on unsorted ore is 80% and on sorted ore 87%. Mill return on r.o.m. is $0.8 \times \$10.80 = \$8.64$; costs as above are $2.34 + 1.00 + 2.85 = $6.19. Profit per ton of r.o.m. without sorting is $2.45. Return for one ton of sorted ore is $0.87 \times \$68.64 = \$59.72$. Costs are: *mining* 6.51 tons, $15.23; *sorting*, $1.95; *transportation*, $1, if sorting is done at mine, as it should be, of course, under the circumstances; milling, $3.22; total, $21.40. Profit per ton of sorted ore, $38.32; per ton of r.o.m., $5.89. Profit per ton of r.o.m. from sorting is $3.44. The point at which the cost of sorting eats up the profit therefrom is $z = \$3.44 + 0.30 - 2.45 = \$1.29$ where $0.30 = 1.95/6.51$ = cost of sorting per ton of r.o.m. when profit from sorting was $3.44 per ton of r.o.m. If the waste sorted out yields a profit either from sale or from use as mine support or the like, such profit is to be credited *pro rata* to the sorting operation.

Reef picking is the name given on the Rand to sorting during development work to reclaim and store material of too low grade to rehandle. King and Clemes (*39 JCM 135*) report that in the development of VOGELSTRUISBULT 8,000 tons of >1-in. reef was sorted, containing 8 dwt. per ton (3,200 oz. Au); 6,000 tons 1~$^1/_8$-in. grits was screened out, assaying 3.5 dwt. per ton (1,050 oz. Au), and 100,000 tons of fines, assaying 2 dwt. per ton, was impounded (10,000 oz. Au). This material was substantially all milled in the early months of mill operation at a gross profit estimated at $30,000 per mo.

4. MECHANICAL PICKERS

Several machines have been invented for picking crude anthracite, all built to take advantage of the difference in shape between particles of coal and of slate. The simplest and earliest form, typified by the ZIEGLER picker, consists of a sloping steel chute with a transverse slot in the bottom through which the flat, sliding, slow-traveling slate falls while the rounded, rapidly rolling coal particles "jump" over and pass on to the end. The principal modification of this type is a slate-bottomed chute, which retards slate in the coal more than a steel bottom and causes more rolling of the coal. Another modification of the same device was introduced by shaking the separating chute, which, of course, makes it possible to set the separating surface on a flatter slope and thus save headroom. Another modification is the roller picker, which has a series of transverse spaced rollers across the bottom of the separating chute, the spaces corresponding to the slots in the jump-type pickers. AYERS PICKER consists of a flat apron conveyor traveling up-slope at such an inclination that rounded coal particles roll downhill while flat slate particles are carried up and over the head roller; speed is 150 to 200 f.p.m.

A modification of the Ziegler picker used in separating flat gravel from rounded in a sized product comprised (*34 #10 PQ 42*) an inclined steel chute with just enough water running to keep the bottom wet; flat pieces tended to adhere and slide slowly, whereas the rounded gravel rolled and bounced; an adjustable flap at the bottom made the separation. At another plant (*43 #10 RP 48*) a sized product was fed to boom-type conveyor, 2×6-ft., inclined 30 to 36 in. in 6 ft., with flat idlers running at 160 f.p.m.; round gravel rolled back while flat discharged over the head pulley; 90% efficiency of separation was claimed.

Shaking picker for coal (*44 #7 CA 61*) comprised a surface shaped like a Venetian blind, set at a flat slope with the blinds sloping against the run of the material, blinds adjustable in pitch, the whole shaken and sloped sufficiently to cause material to travel across it. Sized material is fed and the blinds are set to permit slate to slide between but to reject coal.

Spiral picker was the most widely used of the mechanical picking devices. One form is illustrated in Fig. 4. In sliding down the spiral chutes the coal, being rounded, travels

faster than the flat slate, develops a greater component of centrifugal force, and hence works to the outer peripbery, and falls off into the larger spirals, which discharge separately from the smaller. Spiral pickers will not work on wet coal, and are of little value for fine coal. They are adjustable for temperature. Each type and size of coal requires a different setting; certain types are not amenable. Feed must be closely sized. Spirals had their greatest success in treating anthracite, because the slaty impurities are tabular while the coal is rounded. They have been supplanted by sink-float separators.



FIG. 4. Anthracite spiral (near side of large spiral cut out to permit view).

Spiral chutes have also been used for mixing segregated sizes of crushed stone (*43 # 11 RP 52*).

AMALGAMATION

5. PRINCIPLES OF AMALGAMATION

Amalgamation is a concentrating process in which metallic gold or silver, or an alloy of the two, is caused to pass preferentially across a water-mercury interface from the water into the mercury, after which the metal-laden mercury (AMALGAM) and the impoverished ore pulp are caused to travel different paths to effect separation. The ore containing the metallic precious metals must be ground fine enough to free them, and should either be in a suspension in the water or at least be moved by it; the mercury body may be fixed in position with the stream of ore flowing past it, or the mercury may be in the form of droplets dispersed through the ore at the time that the selection is made, and be thereafter separated by sedimentation or other means.

Selection. The process depends upon three important properties of the substances involved: (1) that the gold and silver are the only metallic substances in the ore; (2) that they are relatively soluble in mercury and relatively insoluble in water, and are, therefore, wetted preferentially by mercury in the presence of water without formation of a stable three-phase contact angle (Sec. 12, Art. 6); and (3) that the surface tension of the interface water-mercury is high enough (375 dynes per cm.) to cause a metallic particle wetted by the mercury to be engulfed therein while a particle wetted preferentially by the water is similarly engulfed by it. The case is entirely analogous to that of the gangue and conditioned sulphide mineral at an oil-water interface discussed in connection with Fig. 9, Sec. 12, with the difference that the surface tension of the mercury-water interface is so much higher than that of the oil-water interface (which is only 20 to 40 dynes per cm.) that the metal particles are held much more strongly by the mercury, and are even engulfed by it.

Separation is effected by anchoring a film of mercury to a metallic surface, usually plane, over which the pulp flows (plates); or by holding the mercury in a pool by the action of gravity, while the pulp flows across its surface (mercury riffles, traps, etc.); or by utilizing the high specific gravity of mercury and amalgams (13.5; or upward if gold is the amalgamating metal) to effect gravity separation in dilute pulps through which the mercury has been dispersed as droplets by agitation.

The essential operating requirements of the process are maintenance of an interface that is essentially water-mercury, uncontaminated by either liquid or solid films; and presentation to this interface of precious-metal particles with clean metallic surfaces.

Contamination of the mercury-water interface occurs in a variety of ways. The most usual cause of contamination is an oil that is or contains a fatty acid or a fatty-acid salt (GREASE). Most machine and cylinder oils and greases used around mines and mills fall into this category, and a large part of all of such material consumed gets into the ore. The amount is rarely less than 0.1 lb. per ton of ore milled, and at small mines working tight veins in hard rock it may be several times this figure. In the process of grinding, this oil becomes dispersed in small droplets through the pulp, and when such a drop meets a mercury-water interface, the oil spreads thereover instantly. The surface then becomes an excellent collector for sulphides, carbonaceous materials, talc, clays, calcite, lime, etc. (see Sec. 12, Art. 4), and unless the adhering film of such material is scraped away, as by scouring or agitation, access by precious metal particles to the mercury surface is substantially impossible.

Base amalgams ordinarily form by precipitation of metallic ions thrown into solution in the pulp by oxidation of their sulphides. Many of these plate out on iron in acid solution. There is always the probability also, particularly in acid pulps, of galvanic action

in the system, in which metallic mercury and copper or/and iron are in contact with an electrolyte and with each other.

Oxide films. Base amalgams will normally stay bright if not subjected to oxidizing conditions, but they flour (break up into small masses) readily. If they are subjected to oxidizing conditions, most of the base metals oxidize readily, and the oxides, insoluble in mercury, float to the surface thereof and form skins that prevent access of gold to the mercury and encourage flouring. This combination of effects is called SICKENING (see *post*). The base-metal oxides also form insoluble soaps with any fatty materials present, which intensifies sickening.

Sulphide ions are blamed, and probably properly so, for a part at least of the aggravated sickening that occurs with ores containing simple and complex sulphides of arsenic, antimony, and bismuth. The direct evidences against the sulphide ion are: (*a*) that the mercury blackens, and (*b*) that calcining removes much or all of the difficulty (such treatment also removes Sb, As, and Bi, however). Indirect evidences are even more persuasive, *e.g.*, (*c*) pyrrhotite and, to a less extent, pyrite, under oxidizing conditions strong enough to produce acid solutions, and, consequently, some sulphide ion, cause sickening; (*d*) antimony and bismuth sulphides, which are more soluble in strongly basic solutions than arsenic sulphides, are more refractory than arsenic sulphides (see p. 15); (*e*) addition of reagents supplying *e.g.*, Pb^{++} or Cu^{++}, which form highly insoluble sulphides and thus reduce sulphide-ion concentration, is helpful (p. 15); (*f*) addition of strong alkalis, which, with arsenic, antimony, and bismuth, form complex sulphur-oxygen ions with these elements, likewise reduces sickening (see p. 16).

Clean gold. Most lode gold from primary unoxidized ores is bright and clean and, if brought into contact with clean mercury, amalgamates readily and quickly. Gold from oxidized ores, on the other hand, is almost invariably TARNISHED (lightly filmed with a non-gold-bearing film), and frequently COATED (rusty) with a heavy film in which oxides of iron are an important part. Tarnished gold does not amalgamate readily; coated gold will not amalgamate at all. Preparation, in such cases, must be such as will remove the tarnish and coating; mechanical means (grinding) is almost invariably the method employed.

Rose states that when gold is hammered the surface gets hard and is then very difficult to amalgamate, but that annealing restores the ready response to mercury. Head (*134 A 266*) has reported that some rusty gold contains particles of rock driven into the surface. These are possible explanations of the difficulty in amalgamating even the coarser gold in some overground pulps.

Coating with chemical collectors. The fact that at the ST. JOSEPH LEAD CO. mill, Atlanta, Idaho (*IC 6836*), amalgamation of rod-mill discharge was improved by addition thereto of flotation reagents comprising 0.6 lb. copper sulphate, 2 lb. soda ash, and 0.01 lb. ethyl xanthate per ton has been cited as evidence that coating with a flotation collector does not inhibit the amalgamation of gold. The facts are not even persuasive to the conclusion stated. The preponderance of copper ion in the pulp over xanthate ion is so great that the concentration of xanthate ion available for coating precious-metal particles is negligible, so that it must be assumed that there were no collector-coated metallic particles in the pulp presented to the mercury either with or without the xanthate addition. The effect of the soda ash in emulsifying lubricating oil, the stabilizing of the emulsion by sulphides and clay or similar gangues, and the removal of sulphide ion by further excess of copper ion are much more likely explanations of the improvement noted.

Amalgams are defined as alloys of mercury and other metals. Considerable evidence is cited (*Rose*) for the existence of a series of compounds of gold and mercury ranging from $AuHg_2$ to Au_3Hg. Mercury filtered from amalgams contains about 0.14% Au at normal temperatures (*9 Phil. Mag. 468*) and 0.65% at 100° C. (*30 Bul. Soc. chim. 20*); these figures are taken to indicate solubility. The usual mill amalgam made with medium to coarse gold is not completely converted to alloy or compound, but contains particles of gold with alloyed surfaces and unaltered gold cores. The solid amalgam is not readily soluble in mercury. Pressing (*post*) of mill amalgams expresses mercury of a low gold content and leaves a brick containing 20 to 40% Au, according to the force employed, the coarseness of the gold, and the age of the mass.

Apparatus employed for bringing the precious metals into contact with mercury surfaces are (*a*) PLATES, *i.e.*, metallic sheets, almost invariably copper, on which a film of amalgam is held relatively stationary while the gold-bearing pulp is flowed over or splashed against it; (*b*) POCKET AMALGAMATORS, *i.e.*, traps, riffles (Sec. 11, Art. 26) and the like, in which a body of substantially liquid mercury is maintained below and in contact with a stream of pulp; (*c*) PRESSURE AMALGAMATORS, in which it is attempted to bring the gold particles against a body of mercury with a force in excess of the force of gravity; (*d*) MIXING AMALGAMATORS, in which the mercury is caused to disperse through the pulp in relatively small droplets, thus increasing the extent of mercury-water interface and correspondingly the probability of contact therewith by gold particles. In forms *a*, *b*, and *c*, the mercury is relatively stationary; in form *d*, both mercury and pulp are in motion relative to the apparatus.

6. PLATE AMALGAMATION

Plates may be either stationary, or oscillating with a small amplitude; the great majority are stationary.

Apron plates are plane, inclined, of 10 or 12 to 100 or more sq. ft. expanse. When they follow stamps, they are as wide as the mortar or slightly wider, and usually 8 or 10 to 20 ft. long; when they follow a tumbling mill they are ordinarily narrower, *i.e.*, 3 or 4 ft. wide, because of the difficulty in obtaining uniform distribution of the pulp over a greater width.

Construction. The frame (Fig. 5) is a shallow trough with bottom usually of 2×4-in. planed soft lumber (redwood, fir, soft pine) on edge, spiked and through-bolted, with sides of the same lumber, also through-bolted, projecting 3 or 4 in. above the bottom and sufficiently below for bolting to supports as shown. It is essential that the trough be tight against leakage of mercury; it must, therefore, be framed carefully, with ample tightening bolts; litharge in glycerine may be used at joints, but it is probably safer to depend on swelling; both lead in oil and asphalt are likely to introduce contamination whenever the plates are steamed, and the oil would certainly cause contamination in early operations, probably, in fact, as long as it was effective as a seal.

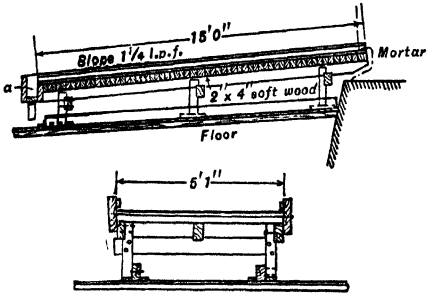

FIG. 5. Frame for amalgamating plate.

Supporting frame should be heavy and rigid and should be completely independent of the battery frame, since vibratory effects on pulp flow are unpredictable and hard to counteract, if harmful.

Slope ranges from 1 to 3 1/2 i.p.f., being low for narrow plates, fine grinding, dilute pulps, and siliceous ores, and relatively steep for the reverse conditions. Adjustment may be provided for in the frame, but it is usually effected, if necessary, by wedging under the feet. The desideratum is to have the pulp flow in a succession of waves or ripples, without deposition of banks; slope and dilution are adjusted to particle size and ore character until the desired state is attained.

Drops of 1/2 in. to 2 or 3 (occasionally 4) in. are frequently provided between succeeding sections of apron plates. These aid in bringing ore particles into contact with plate surfaces, and are claimed to aid in ripple formation. Their primary and obvious effect is contact at the drop, which is testified either by accumulation of amalgam at the drop or by scour at the same point; if scour occurs, the drop is, of course, too great.

Plate is usually of copper (occasionally Muntz metal), not less than 1/16-in. thick, usually 1/8-in., occasionally 1/4- or 3/8-in.; it is screwed to the trough bottom, or held down by side strips wedged under cleats on the side walls. The copper should be of high purity and annealed; it may have an electroplating of silver (2 or 3 oz. per sq. ft.), in which case it is easier to effect the initial setting (*post*).

Area of plate required depends upon the size of the gold, being greater the finer this is; and upon whether amalgamation is the principal means of concentration, or is used only to rough out the coarse, clean gold. Area ranges from about 1 to 6 or more sq. ft. per daily ton, with the average probably between 4 and 5 sq. ft. when amalgamation is the principal process.

Battery plates are plates placed in a stamp mortar. They are usually placed on the chuck block, and may be curved at the top substantially quarter-round, in an attempt to catch gold in the drop-back from the screen in a position that is somewhat protected from the direct splash from the screen.

At ARGONAUT (*IC 6476*) a vertical-faced chuck-block plate was ribbed horizontally with half-round iron strip, spaced 2 in., which helped protect amalgam. Inside plates are infrequently used nowadays, but at GUYSBOROUGH 95% of the plant recovery is made in the mortar.

Splash plates are plates set on a relatively steep angle in front of a battery screen, at such a distance that the splash through the screen falls on them with as little impact as is consistent with a reasonable supply of pulp.

At ARGONAUT (*ibid.*) two such plates were used, 5 in. and 8 in. wide, sloping 3 i.p.f. and 4 i.p.f., respectively, toward the screen, with a 2-in. drop between them, the lower with a 5-in. drop to the mortar lip.

Sluice plates are plates placed in launders, usually between grinding mills and their classifiers, or between grinding-mill classifiers and following apron plates.

At HOMESTAKE such a plate in the launder to the classifier was 12-in.×7-ft.; it loaded up in 4 hr. and was replaced by a freshly dressed strip at this interval (*IC 6408*).

Swinging plates are suspended substantially vertically in a flowing stream of pulp either in such a way that the flow of the stream causes an irregular swing, or better, they are mechanical sweeps with sufficient stirring action to raise the layer of settled sand from the launder floor. They are used infrequently, usually with the idea that fine gold will impinge against them with launder velocities.

Shaking plates, usually with a side-shake mechanism similar to that of a side-shake vanner (Sec. 11, Art. 24), are sometimes used when the available headroom is insufficient for apron plates, or when sand packs badly on such plates. They are set on slopes of $^1/_4$ to $^1/_2$ i.p.f. and run at 180 to 200 @ 1-in. s.p.m. Width is usually as great as is structurally possible (5 or 6 ft.) in order to give a thin bed. They give more agitation than is obtainable on a fixed plate and can be operated with thicker pulp. They may be riffled near the head, and should be followed by a trap (*Bul 363 USBM*).

Gibson amalgamator is a shallow rubber-lined riffled box shaken by a shaking-table head motion and having transverse amalgamating plates against which material impinges.

Covered plates. Amalgam is an overpowering temptation to many laborers, and with the conditions that have prevailed since the early 30's, it is cheaper to put mechanical deterrents in the path of the amalgam thief than to depend on the law, despite that locked coverings over plates and stacking them to gain capacity within small enclosures results in decreased efficiency, owing to difficulty in inspection and dressing. A number of forms of boxed-in amalgamators are on the market. All consist of some variant on a tier of small plates in series, rarely totaling in area per ton that of an apron plate, all narrow and hence carrying deep streams, and all depending on multiple drops from plate to plate, with splash plates at the turns, or in some cases, upon impingement effected by motion of the plates, to compensate for the deep stream. None of them affords inspection, of course, without unlocking, and all must be run on a time-schedule so far as dressing (*post*) is concerned.

Preparation of plates (SETTING) is aimed at the production on the upper surface thereof of a sheet of amalgam of such consistency that it deforms readily under pressure of the finger or of a stiff-bristle brush or whisk broom, yet will not weep mercury. To do this involves amalgamating the plate; this requires a clean plate and clean mercury.

Usual procedure is to scrub the plate thoroughly, first with fine sand and later with fine emery cloth until it is free of all stain and tarnish, taking care not to scratch. Some operators use fine sand impregnated with mercury and moistened with dilute cyanide solution or a stronger ammonium-chloride solution for scouring, thus insuring that the mercury is brought to a clean plate. Cyanide was found to be a necessity when nonsilvered plates were coated at PORCUPINE UNITED (*IC 6433*). Silvered plates may then be amalgamated directly with mercury by sprinkling the mercury on and rubbing with a grease-free brush or rag. Copper plate is more usual, however, and silver amalgam is employed for the first application because the catch is easier. Once a catch is effected, the coating is brought to the desired consistency by thinning with mercury or thickening with silver (or plant) amalgam. *Rose* states that about 0.21 oz. Hg and 0.08 oz. Ag amalgam per sq. ft. is required for setting new plates, and that it is desirable in the case of copper plates to set them several weeks before putting them into service. Chapman recommends 0.5 oz. Hg and 0.25 oz. Ag per sq. ft. (*Bul 138, Ariz. Bur. Mines*).

Muntz metal (60 Cu, 40 Zn) plates are said to be better than copper plates for heavy-sulphide and arsenical ores, because of greater resistance to sickening, and for custom mills because of easy, rapid, and more complete clean-up, owing to smaller penetration by the mercury. They do not require aging after the first setting. Stains can be removed with sulphuric acid. Amalgamation is effected by first cleaning by scouring with dilute sulphuric acid, then making a first catch by hard rubbing at one spot with mercury and a flannel cloth and then working more mercury in across the caught spots. Muntz-metal plates are not as satisfactory as copper for highly acid ores (*Rose*).

Purification of mercury is effected by distillation followed by acid treatment of the distillate. Gross impurities are first removed by straining through tight canvas, chamois, or the like. Lime, to take up fatty acids, and iron filings, to take up sulphur, are placed in the still. Some base metals volatilize with the mercury; in part these condense as solids prior to condensation of the mercury (b.p. = 675° F.). Zn, Cu, Fe, and Sn may be leached out of the distillate by shaking with dilute HCl, or by placing a layer of dilute (1 : 3) HNO_3 over the mercury and stirring occasionally. Other methods are to drip the mercury repeatedly through a long column of $HgNO_3$ or dilute HNO_3, or to shake with aqueous solutions of strong oxidizing agents ($FeCl_3$, H_2SO_4, $K_2Cr_2O_7$), or to blow air through a layer of the metal covered with a dilute solution of HNO_3 or H_2SO_4 (*Rose*). Dilute cyanide solution may also be used.

Pure mercury forms no tail when flowed over a clean surface; when floured it coalesces in water plus metallic sodium, or with an electric current (*Rose*).

Purified mercury should be kept in iron, earthenware, or glass flasks, and should be handled as little as possible, with special attention to exclusion of organic matter of all kinds.

Silver amalgam is made by grinding precipitated washed metallic silver with mercury in a porcelain mortar, adding sufficient silver to produce a mass of buttery consistency (about 1 Ag to 3 Hg). The silver may be made by reducing precipitated AgCl with HCl and metallic iron (*e.g.*, iron nails), or by precipitating silver on copper strip from a dilute solution of silver nitrate (12 to 24 hr. required for complete precipitation). The precipitated silver is loosened from the copper by heating the solution almost to boiling. It should be thoroughly washed and dried before amalgamating.

Sodium amalgam is sometimes used for refractory ores, particularly for those containing arsenic. The sodium content is minute (1 part Na to 2,000 Hg on GUYSBOROUGH ore). It is made by adding

small grains (*e.g.*, 1-mm.) of clean metallic sodium to mercury; it is of proper strength when it will just stick to a clean nail (indicating 0.5 to 2 parts Na to 1,000 Hg). It may also be made by electrolysis (Chapman, *loc. cit.*) using a 10 or 15% solution of sodium chloride over the mercury and an automobile storage battery for current, making mercury the negative pole (insert lead through glass tube immersed in Hg before pouring on the salt solution). Use nail test; 10 or 15 min. electrolysis is usually sufficient.

Chapman (*loc. cit.*) states that sodium amalgam promotes formation of base-metal amalgams.

Operation of Plates

Operation of plates comprises (*a*) DRESSING, *i.e.*, bringing the amalgam coating to a state that is best for catching gold and at the same time resisting scouring and loss, and (*b*) cleaning, which consists in removal of amalgam.

Dressing of plates has several facets. From the mechanical standpoint, it seeks to correct the conformation and consistency of the surface resulting from differences in abrasion and from uneven rates of formation of amalgam; from the chemical angle dressing is directed toward removal and correction of stained and sickened areas. The desirable rippled flow is promoted if the surface is finely ridged transversely to the direction of flow, and such ridging tends also to prevent uneven banking of sand with resultant channeling and staining. Hence the consistency of the covering is made stiff enough to hold ridging, and the finished texture is applied with a whisk broom or stiff-bristled brush which is stroked across the plate. Stiff amalgams also hold mercury well, thus preventing leakage or weeping. On the other hand, the activity of an amalgam surface in catching and holding gold is greater the softer the surface. Hence the consistency sought is the best compromise between these two demands, and in general is as described under ***Preparation of plates*** (*ante*).

Procedure in dressing is to cut off flow of pulp to the plate, wash down fine sand with a hose, at the same time brushing black sand and/or sulphides toward the top of the plate for subsequent clean-up, to soften hard spots by adding mercury and mixing it in by rotary or reciprocating brushing, and then to resurface by transverse brushing, working from the bottom up and from center to sides, finally removing any excess of amalgam or mercury that collects along the edges.

Staining and sickening are evidences of unwanted chemical reactions at the amalgam-water interface between substances derived from the pulp and/or the atmosphere and/or the metals comprising the plate and its amalgam coating. The only element in the system that is not under suspicion in such a case is the gold. Both staining and sickening prevent amalgamation of the precious metals, and cause the mercury to flour and fail thereafter to coalesce.

The general nature of the reactions that cause sickening has been discussed in Art. 5. Remedies have developed by trial-and-error over the years, but can be much more intelligently applied by consideration of the chemistry involved.

Any one pulp comprises a mixture of solids, having more or less chemically active surfaces, with an aqueous solution more or less saturated with salts dissolved from the ore or derived therefrom by oxidation reactions, and containing also solutes and suspended materials picked up by or intentionally added to both ore and water in their travels to the point under consideration. Additionally, in amalgamation practice, there are frequently two or more metals in contact with the electrolyte, and a metallic circuit closure exists, so that electrolytic effects are also present. This is the system with which the amalgamator must deal.

Organic materials containing fatty acids and soaps are much more harmful with ores containing talc and graphite than they are in clean siliceous ores, because they are the means through which these and like ingredients of such ores are held at the mercury-water interface (Art. 5). A small amount of such oils, such as is introduced in mining, is readily tolerated by clean ores, but the amount should be kept as low as possible by use of drip pans in the mill, and by exclusion of surface wash, particularly such as is oil- or grease-contaminated, from the pulp stream. If pulp spill in the mill is likewise minimized to the extent that it can be washed directly to the tailing launder in mill cleanups, one source of difficulty will be removed. Furthermore, pure hydrocarbon lubricants, without vegetable-oil dopes, are satisfactory for most oil lubrication in mine and mill. Such oils are relatively harmless, if fatty acids and soaps from other sources are kept out of the pulp. Greases are thickened with soaps. These are usually lime soaps in the cup greases, and the lime soaps are relatively insoluble in water, or in oil in the presence of water, and have very little surface activity or collecting ability; hence they are not particularly harmful. Soda soap is usually the thickener in stiff greases; it has high surface activity, *i.e.*, it spreads readily at air-water and mercury-water interfaces; it is readily soluble in water, and is an excellent collector, particularly in conjunction with its accompanying oil, for calcium and magnesium minerals, and for heavy-metal sulphides; it must, therefore, be rigidly excluded.

When fatty-acid-bearing oils cannot be excluded from the pulp, their effect can be minimized by addition of lime; this reacts with the fatty-acid ion to form the insoluble calcium soaps, which then tend to adhere more or less indiscriminately to any solid surfaces in the pulp, and thus to minimize

the chance that gold will be smeared. The addition should be made as far ahead of the amalgamating plates as possible in order to give maximum opportunity for reaction and nullification.

Talcose, clayey, and graphite ores low in sulphides can be substantially denuded of these nonmetallic constituents and of organic materials at the same time by running the ground pulp through a flotation machine with a small amount of frother (Sec. 12, Art. 13) as the only reagent added, and operating to make a light fragile froth; this will carry little or no precious metals unless these are in sulphides. If iron sulphides tend to float they can usually be kept down by lime (Sec. 12, Art. 47).

Talc, clay, and graphite will cause no trouble in the absence of fatty-acid-bearing oils.

Heavy sulphide ores are not suitable for plate amalgamation, primarily because of their tendency to form banks on the plate and shield the surface from access of gold. They are usually amalgamated in barrels (*post*). There, if the pulp is kept alkaline, they cause little difficulty unless they contain sulphides of arsenic, antimony, or bismuth, or complex sulphides of the heavy metals of the arsenide or antimonide type. The general prescription for their treatment in the barrel is to do most of the grinding before adding mercury, during this time to maintain the pulp alkaline, and preferably of oxidizing character, and to make the actual time of amalgamation as short as possible. If, during the grinding, ions are present which precipitate or complex the heavy-metal ions brought into solution by oxidation of the sulphides, it is probable that the behavior during subsequent amalgamation will be improved, but the danger of forming scaly base-metal amalgams by electrolytic discharge of their ions is not so great as in plate amalgamation, because of the relatively larger amount of mercury present in the barrel.

Arsenic, antimony and bismuth sulphides are the worst offenders in ores, so far as sickening is concerned. Leaver and Royer (*RI 3275*) report results of laboratory tests as in Table 4. The experiments were made by grinding together 10 parts of the listed minerals, 90 parts sea sand (primarily

Table 4. Mercury losses due to grinding in artificial mixtures of sea sand and the listed minerals (*After Leaver and Royer*)

Test No.	Mineral tested, 10 parts; sea sand, 90 parts	Mercury loss, lb. per ton in tailings after					
		Panning		Panning + amalgamation		Panning + amalgamation + flotation	
		Following grinding for — min.					
		35	240	35	240	35	240
1	Talc	0	3.4	.....	0.2	.....	0.2
2	Siderite	0.8	3.2	0.4	0.8	0.13	0.2
3	Cerussite	0.22	3.1	0.20	2.8	0.10	0.2
4	Smithsonite	0	4.0	.....	0.68	.....	0.5
5	Malachite 20, Azurite 80	0.8	1.4	0.6	1.0	0.2	0.4
6	Sulphur	0	49.0	.....	30.0	.....	8.0
7	Galena	2.0	2.8	1.2	0.9	0.4	0.6
8	Sphalerite	2.0	10.0	1.3	3.1	0.4	0.7
9	Pyrite	1.2	13.0	1.0	2.0	0.4	0.8
10	Marcasite	0.6	21.0	0.6	*a*	0.35	0.6
11	Pyrrhotite	1.6	22.3	1.0	12.2	0.5	0.9
12	Arsenopyrite	1.04	14.0	1.0	4.0	0.36	2.3
13	Realgar	53.0	60.0	19.1	22.8	0.4	4.2
14	Stibnite	88.0	159.4	50.3	122.0	0.4	3.6
15	Chalcopyrite	2.04	14.2	1.28	3.4	0.2	1.75
16	Enargite	1.72	91.6	0.84	14.2	0.6	9.0
17	Tetrahedrite	1.84	26.2	1.8	5.4	0.33	0.34
18	25% each of hematite, martite, magnetite, and limonite	0.4	0.6	0.4	0.4	0.15	0.16
19	Graphite	9.0	126.0	0.4	92.0	0.12	0.18
20	Amorphous carbon	0.4	38.0	0.4	1.0	0.30	0.38

a Erroneously reported as 66.0.

quartz), water in unrecorded quantity but apparently 40 to 50% of the mixture, and mercury in an amount equivalent to 400 lb. Hg per ton of other solids. Grinding times were 35 min. (which gave a 65-m. grind) and 240 min. (which yielded a very fine pulp). The ground material was subsequently panned, residue amalgamated on a plate, and plate residue floated with amyl xanthate and pine oil. Net mercury losses after the successive treatments are the tabular values. Blanks on sea sand showed no loss after panning. *Rose* states that bismuthinite acts the same as stibnite, but less rapidly. Jackson and Knaebel (*Bul 363 USBM 105*) report that when mercury is sickened by Sb- and As-bearing ores, it becomes black, which indicates the presence of sulphide ion in the pulp. Flynn (*42 CIMM 150*) reports that addition of lead ion to an arsenic-bearing pulp prevents sickening, and a similar report comes from Seal Harbor (*Tref, 10/38*), where litharge is effective to lower the gold content of barrel tailing and decrease sickening. The effect of the lead ion would, of course, be to decrease the con-

centration of sulphide ion in the pulp; it would also tend to precipitate at any solid surface where sulphide ion was available and thus close the surface against further emission of sulphide ions.

Flynn also reports that the addition of 0.7% NaOH, 0.85% As_2O_3, and 1.5% lead acetate or white lead, based on the solid charge to the barrel, made it possible to grind an arsenopyrite ore 9 hr. in the presence of mercury with no mercury loss and a high (80%) recovery of gold, when without the reagents, there was marked sickness, heavy mercury loss (18%), and low recovery. The time-factor effect of the reagents is shown in Fig. 6. The *p*H of such a pulp, if it contained the usual high percentage of solids employed in barrel grinding, would be high enough to throw much of the lead into plumbite form, in which it is available to sulphide ion (Sec. 12, Art. 10), but not otherwise available in the system, and to dissolve the As_2O_3 as arsenite ion. Excess of arsenite ion in solution tends to hold back decomposition of arsenopyrite, and thus decrease the supply of sulphide ion further.

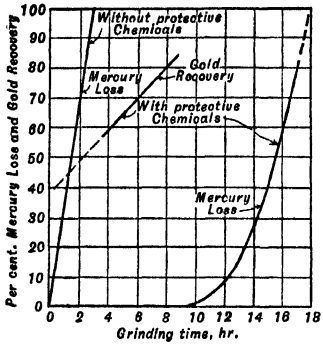

FIG. 6. Effects of time and protective reagents on mercury loss (*after Flynn*).

Sodium amalgam is commonly reported as having some effect against sickening in some cases, notably with arsenical ores, but to be harmful with antimony and bismuth sulphides. The sodium is oxidized by water at the amalgam surface to form sodium hydroxide and hydrogen, as a result of which any metallic oxides at the mercury surface, including mercury oxides, are reduced. The action with arsenic is probably the same as that of strong sodium hydroxide, which tends to complex the arsenic, as discussed *ante;* the continuous formation of hydroxyl ion directly at the mercury surface by decomposition of water by metallic sodium results in high concentration of hydroxyl ion at the interface, although the concentration reckoned on the bulk of the pulp solution is low. Both antimony and arsenic sulphides are soluble in strong sodium hydroxide solutions, with resulting low concentration of sulphide ion. But since the sulphides of mercury and arsenic have much the same solubilities in aqueous solutions, the precipitation of mercury sulphide is low. Antimony sulphide is, however, much more soluble than mercury sulphide, so that when sulphide ion from this source is made available in the presence of mercury, the mercury sulphide precipitates. Bismuth is similar in this respect to antimony.

The sulphides of arsenic, antimony, and bismuth have the further peculiarity that they are collectible by neutral hydrocarbon oils alone (Sec. 12, Art. 6). Since there is always enough fatty acid in any such oils present in an ore to cause them to spread at a mercury-water interface, it is probable that much of the ill effect of these sulphides is due to co-action with lubricating oil, in which case the presence of lime during grinding, or better, conditioning with lime prior to grinding, would go far toward eliminating a part of the difficulty.

Staining is usually a sign of acid pulp. A green stain (VERDEGRIS) is due to copper, and occurs principally at places where the amalgam layer is thin and/or where sands bank. It is probably caused by solution of copper oxides at the mercury surface and precipitation of the dissolved copper as carbonate, in regions of high concentration of copper and/or maximum exposure to air and protection against scour. The stain is removed readily by complexing with cyanide or ammonia (sal ammoniac) or by solution with dilute strong acids (HCl or H_2SO_4).

Brown stains are ordinarily due to iron salts. The usual remedy is to flocculate the hydroxide by making the pulp alkaline; otherwise the stain must be removed by dressing.

Reagents used in dressing plates are ammonium chloride (sal ammoniac), sodium or potassium cyanide, weak solutions of hydrochloric and sulphuric acids, and sodium hydroxide or lye.

Ammonium chloride removes oxide stains and probably complexes copper and iron. It is used both as a solid and, more frequently, as a dilute solution.

Cyanide ion complexes copper and iron readily, rendering them soluble in the absence of excess of the metallic ions; removal of the cyanide ion raises the alkalinity of the remaining solution and thus makes it effective in removing grease. Gold, silver, and mercury are also complexed, however, so that cyanide dressing solutions must be dilute, or concentrated solutions must be used locally and in small quantities, *e.g.*, as by holding a lump of cyanide in tongs just above a wetted stain for a short time.

Acids dissolve base-metal and mercury oxides. Dilute HCl and H_2SO_4 dissolve substantially no metallic mercury.

Alkaline bases are used primarily for saponification of fatty acids, thereby rendering them soluble and causing them to emulsify hydrocarbon oils with which they may be associated. They also tend to disperse clays and talcose materials and thus detach them from a mercury-water interface.

Dressing interval depends upon the rate at which amalgam forms and upon the tendency of the plates to stain and sicken.

At ARGONAUT (*loc. cit.*) chuck plates are inspected hourly and accretions removed and/or mercury added as conditions indicate, while outside plates are dressed at 24-hr. intervals; the ore is clean and

the bulk of the recovery is made in the battery. At ST. JOSEPH LEAD CO., Atlanta mill (*IC 6856*), outside plates are dressed every 2 hr.; at PORCUPINE UNITED (*IC 6470*), every 3 hr. These citations represent usual extremes; average lies between 4 and 6 hr. At ATLANTA 0.17 oz. of mercury and 0.86 oz. per sq. ft. of softened amalgam from previous clean-ups are added in dressing. At ARGONAUT 3 1/2 hr. is required to dress 1,032 sq. ft. of apron plates. At HOMESTAKE, where feed for plates is ground in rod mills, mercury for maintaining proper consistency on the plates is largely added through the rod mills in predetermined amounts at 30-min. intervals.

Clean-up of plates consists in removing a more or less large percentage of the accumulated amalgam. The interval ranges from daily to monthly or even quarterly, and the extent of cleaning varies almost as widely. A simple clean-up is typified by practice at ATLANTA, where a daily clean-up is made. The battery is shut down, the plate hosed off, the upper half of the plate is scraped hard with a piece of rubber belting, and the loosened amalgam is taken off with a putty knife. The plate is then washed off with caustic solution, hosed, and redressed. Such treatment requires 10 to 15 min. per battery.

Steaming. After several weeks or months of light clean-ups, plates tend to become coated with a hard scaly amalgam which ties up considerable gold and also decreases effectiveness as a gold catcher. Usual practice is to steam such plates and then scrape with a metal scraper. On the Rand (*RMP*), at 3- or 4-mo. intervals, a wooden hood was placed over the plate and steam was turned in for 10 or 15 min. The plate was immediately scraped with a putty knife or similar metallic scraper, taking care not to scratch, and thereafter redressed with mercury while still warm.

When battery amalgamation is practiced, clean-up procedure is much more elaborate. Screens and dies are removed and washed in a tub, the mortar is cleaned out thoroughly, the removed material is panned, and the residue is returned to an uncleaned mortar or ground in a barrel or pan (*post*). Such cleaning, with thorough plate cleaning, and clean-up of all mill traps, may take several days, and constitutes, say, a monthly program at small mills treating high-grade ores.

Since the catch is better on a surface that has a good coating of plastic amalgam than on one that is newly and thinly amalgamated, it follows that thorough clean-ups should be made as infrequently as is permissible from operating and financial viewpoints.

Size of feed. Feed should be fine enough to free the gold and not so coarse that scour is excessive. Feeds as coarse as 8-m. are frequently treated; <1/4-in. feeds have been handled, but scour is so great that unless very coarse gold is thus removed from a coarse stamp-battery discharge, the practice is not justified. Feeds <35-m. and not so fine or slimy that fine gold is suspended are ideal.

Pulp density should be low in order to aid settling of gold; 10 to 25% is the best range (*Bul 363 USBM*).

Heat increases the catch and aids in coalescence of mercury (*Rose*) but also increases the solubility of the ore salts in water and of the base metals in mercury. It also softens amalgam and may increase scouring loss. *Smart* recommends 80° F. maximum. If water is too cold, amalgam becomes hard and crumbly.

At ATLANTA water temperature is held to 45° min. in winter by heat exchange on Diesel cooling water. Temperature of 150° in barrel amalgamation at WENDIGO is noted in Art. 4.

Old plates develop uneven surfaces and holes and must be discarded. They contain considerable gold, even after close scraping. Recovery (SCALING) consists in first heating gently, as over a log fire, to less than red heat, to expel mercury, then pickling for 8 or 10 hr. with dilute HCl, then heating to a dull red heat and quenching in cold water. A loose scale is thus developed on the working side of the plate. It is collected and boiled in HNO_3 to dissolve out copper and other base metals.

On the Rand (*RMP*) scaling was done without the preliminary removal of mercury by treating 15 min. with a paste of NH_4Cl, 1/2 lb.; KNO_3, 1/2 lb.; HCl, 1/2 lb.; H_2O, 1 lb., applied with a soft brush. The plate was then heated until black, requiring about 1/2 hr., and quenched in water. Scale was melted in a crucible in a charge comprising 1 part each of scale, sulphur, borax, and sand; or 100 scale, 50 borax, 25 sand, and 8 MnO_2.

A copper plate absorbs about 1/4 oz. Au per sq. ft., mostly in the first week. Electrosilvered plates at a Colombia mill are reported to have yielded 3 to 5 oz. gold per sq. ft. after 2 yr. service (*Rose*).

Electrolytic amalgamation, in which a potential difference between the mercury surface and the pulp is set up by immersing an electrode in the pulp and making the mercury the other electrode, has been proposed many times. Shepard (*134 A 265*) reported experiments indicating some enhancement of recovery under laboratory conditions, but no particular promise of practical advantage.

7. POCKET AMALGAMATORS

Pocket amalgamators are devices in which liquid mercury and amalgams are held in pockets while the pulp to be amalgamated is flowed over them. Traps and riffles are the common forms.

Traps are boxes placed in the flow of a stream of pulp in such a way that the level of the outlet is above the bottom of the box. There are many forms. They are best so designed that the velocity of the stream is somewhat slowed in passing through them, that the heavier sand in the stream forms a teeter column in the box, but not a settled bed, and that the outlet is sufficiently removed from the lowest part to minimize scouring out of mercury and amalgam. The commonest form is that made by putting a submerged weir in the cross launder at the end of the apron plate (see *a*, Fig. 5); if this discharges at one end, a low stop will serve; if a central pipe discharge is used, as indicated in Fig. 7, the pipe may be carried up 2 or 3 in. above the floor of the launder, with a hood to divert any direct by-pass from the plate. Such a launder trap will catch and hold all of the coarse and much of the fine amalgam that comes to it, despite that most of the bottom up to the level of the outflow is sanded up and inactive. It also yields a relatively large bulk of material to be cleaned up (*post*).

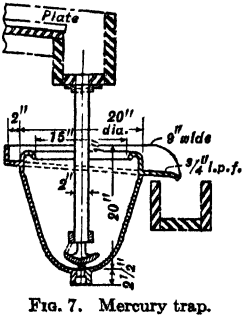

FIG. 7. Mercury trap.

At ST. JOSEPH LEAD CO., Atlanta plant (Sec. 2, Fig. 74), such a cross trap is made 8 in. deep, and is cleaned up once a day; the usual yield is 1/2 to 1 lb. of quicksilver and amalgam, but occasionally, when the plates are working improperly, half of the normal plate yield is made from the trap; a 24-riffle section in the launder following the trap yields about 0.5 lb. of concentrate per week, most of the amalgam and mercury in it being badly fouled, which attests the efficacy of the trap.

Fig. 7 shows a form of trap commonly used to contain a pool of mercury and to amalgamate in addition to its action as a settler for lost amalgam. Fig. 50, Sec. 2, shows a hydraulic trap used at TALACHE (Sec. 2, Fig. 49). These traps are frequently provided with draw-off valves for thin amalgam, which permits longer operation without a clean-up. Traps such as these are highly effective in catching coarse gold, but catch little fine because of rapid rising current.

Riffles (Sec. 11, Art. 26) are frequently used as mercury traps. Procedure is to run the sluice until the inter-riffle spaces have filled with sand and leaks have stopped, then to add mercury slowly to the head of the sluice line, permitting it to find its own pockets, until the desired condition in the riffles is reached. This is when the head-end riffles show clear pools of mercury well up to the top of the riffle cleats, the depth below the top depending upon spacing of riffles and the size and quantity of gravel. Amount of mercury required for charging is given by *Bowie* as 225 lb. for 200 to 300 ft. of 6-ft. sluice, and 80 to 90 lb. for 24 ft. square of undercurrent; Gardner and Johnson (*IC 6787*) report charges on dredge tables (Sec. 2, Art. 21) of 150 to 3,000 lb. for 1,000 to 100,000 sq. ft. of table, common practice ranging from 0.1 to 0.25 lb. per sq. ft. of table area. Usually only the upper 2 or 3 boxes are charged. Subsequent additions are made as required to keep amalgam soft at the head of the line.

Hosking amalgamator, used at FRANCOEUR GOLD MINING CO. (*Bul 342 CIMM 323*) for very fine gold consisted of a battery of parallel 8-in. launders, 5 ft. long, with 8 baffle riffles each, each with 10 cc. of mercury, the assembly receiving a bumping motion from a cam and shaft. On settled sands such motion causes reverse classification.

Gold pan is frequently used to run down small amounts of gold-bearing concentrate with mercury. Charge of concentrate is 5 lb. or less according to the black-sand content. One oz. to 1/4 teaspoonful of mercury is sufficient for a pan load. Copper or copper-bottomed pans are used when it is desired to use the pan as an amalgamator in primary service. It is set, dressed, and cleaned as for plates (*ante*). The sand must be fine; coarse sand and gravel scour the amalgam.

Centrifugal amalgamators are devised on the theory that by multiplying the sedimentation effect on fine gold particles in water (Sec. 8, Art. 13) they can thereby be brought into contact with mercury and be caused to amalgamate. The usual device is a bowl centrifuge with sloping sides, finely riffled circumferentially to hold mercury. They have not been highly successful, because fine sand packs in above the mercury and prevents access of subsequent sand thereto.

8. GRINDING AMALGAMATORS

Grinding amalgamators are used for cleaning of concentrates in which the gold is rusty and difficult to amalgamate, or is very fine, or is locked with other minerals, or is in an

ore which requires high concentrations of protective reagents and agitation to effect amalgamation and/or prevent sickening of mercury. The usual apparatus is the amalgamating barrel; less frequently a grinding pan or a mechanical mortar is used.

Barrel Amalgamation

Amalgamating barrel (Fig. 8) is (usually) a batch-type tumbling mill, trunnion- or gudgeon-mounted, ordinarily with a manhole for charging, and with or without other openings for discharging. SIZES range from 18(diam.)×24-in. to as large as 4×6-ft.; usual sizes are 2×3- and 3×4-ft. TUMBLING CHARGE is usually small and in large units, *e.g.*, 1 or 2 pieces of 4- or 5-in. shafting, or half a dozen 4- or 5-in. balls, but equal or greater weights of, say, 1 1/2-in. balls are used when liberation rather than mere brightening is a major element in the operation. SPEEDS are low in order to minimize agitation, substantially always below cataracting speeds. PULP DENSITY is high (80% solids) or low (20 to 30% solids) according to whether the aim is to impregnate the pulp with mercury droplets or to maintain the mercury in a pool. LINERS are usually omitted, because of the tendency of gold and amalgam to catch and hold in the crevices thereof, but rubber-lined mills may be used (*Bul 342 CIMM 323*). At LEITCH GOLD MINES, Beardmore, Ont., rubber lining in a 2×4-ft. barrel showed little or no wear in a year, with a daily 4-hr. grind of 600 lb. of jig concentrate with lime and lye (*ibid.*). CONTACT TIME with mercury ranges from less than 1 hr. (50 min. at PILGRIM, *IC 6945*) to several hours. When the ore has a tendency to sicken mercury and yet considerable grinding is required, it is usual to do most of the grinding first, then introduce mercury and run for a short period to effect amalgamation.

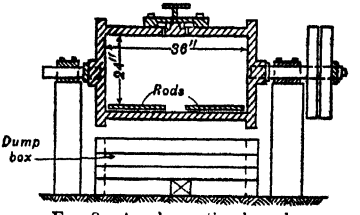

FIG. 8. Amalgamating barrel.

Reagents used depend upon the character of the ore and impurities. Since agitation serves to keep clean mercury surfaces exposed to the pulp, the important end is to prevent such flouring and sickening that subsequent coalescence cannot be effected.

Alkalis in the form of NaOH, KOH, Na_2CO_3, CaO, or $Ca(OH)_2$ are added to combat organic contaminants. Usually lime is used for gravity concentrates (*e.g.*, from stamp mortars, traps, mineral jigs, and tables) and lye or caustic soda for flotation concentrates, where higher alkalinity is necessary to dissolve or decompose collector coatings.

Ammonium chloride is used for the same purposes as in plate amalgamation (Art. 6).

Oxidizing agents. Potassium bichromate or potassium permanganate are sometimes used (WENDIGO; *Tref, Bul M4B12*) with ores tending to yield sulphide ion (Art. 6) in order to oxidize it and thus prevent sickening. The bichromate is also claimed to brighten brown and tarnished gold.

Cyanide is sometimes added in relatively small amounts. *Janin* cites an instance in which use of 1/4 lb. of cyanide per 1,000 lb. of riffle concentrate cut the mercury loss 30 lb. per 100 tons of sand, *i.e.*, from a 20-lb. loss to a 10-lb. gain.

Plumbate-arsenite mixture. See Art. 6.

Operation. CHARGE of pulp plus tumbling bodies should be from 1/3 to 1/2 of mill volume. If grinding is important, PULP DENSITY should be 60 to 80% solids; if amalgamation only is sought, it is usual to operate at 30 to 50% solids. If the pulp is refractory, and addition of mercury is deferred until grinding is substantially complete, pulp is often diluted at this time. HEAT is sometimes employed, particularly when the charge is largely amalgam, as in battery and sluice clean-ups. The amount of mercury added depends upon the richness of the ore; *Rose* recommends 20 lb. minimum for a 700-lb. charge of concentrate; more if the grade is high.

Mill Practice

At ARGONAUT (*loc. cit.*) the residues from battery clean-up were ground 12 hr. with 3 pieces of stamp stem; 350 oz. mercury was then added and grinding continued for 1 to 2 hr. more. The gold extracted was $11.44 ($20 gold) per oz. of mercury fed. The mill discharge was jigged to recover amalgam.

At PILGRIM (*IC 6945*) unit-cell concentrate was charged continuously with 2-lb. NaOH per 24 hr. to an 18×34-in. barrel containing 30 lb. sodium amalgam, and one piece of 5-in. shafting and running at 26 r.p.m. Recovery was 96% with a clean-up every 2 or 3 days. Tailing and cleaner concentrate went to a 20-in.×10-ft. 2-compartment mill with a piece of 5-in. shafting and 30 lb. of sodium amalgam in each compartment. One-half gallon of hot water was charged per min., and contact time was 80 min. Clean-up for this barrel was bimonthly. There was very little flouring or loss with current concentrate, but on old concentrate recovery dropped to 50%.

In NOVA SCOTIA battery and gravity concentrates are arsenical, highly toxic, and contain very fine gold (10- or 20-μ and smaller) (*Flynn, loc. cit.*). Practice is to grind for 1 1/2 to 2 hr. with a few balls

and a little lime, then add 20 to 30 lb. of mercury, run for 1 hr., dilute and dump. Rejects are sent back to the stamps. Longer running after mercury addition results in high losses of mercury and gold.

In the larger RAND mills (*Rose*) concentrate was fed continuously by hand to 4×6-ft. tube mills discharging to shaking plates to settling boxes whence the overflow went to cyanidation, and the settlings, after panning, were returned to the clean-up tube mill.

At RED ARROW (*Tref Bul M7B8*) 50 lb. of mineral-jig concentrate is charged with 60 lb. of 1- and 2-in. balls and 20 lb. of mercury, with enough water to make a pulp of 80% solid, sand ground 2 1/2 hr. Gold is clean and bright. Feed contains 50 to 200 oz. Au per ton; tailing, containing 0.8 oz., is sent back to the jig.

At CENTRAL ZEBALLOS (*Tref Bul M7B8*) 500 lb. concentrate containing 113 oz. Au per ton is charged, with 300 lb. @ 4-in. balls and 200 lb. @ 2-in. balls, 1 1/2 lb. each of NaOH and NH_4Cl, 5 lb. CaO, and enough water to make a pulp of 80% solids, to a 2×4-ft. rubber-lined barrel, and is ground for 17 1/2 hr.; 10 lb. mercury is then added with a further addition of 1 1/2 lb. each of caustic and sal ammoniac, the barrel is filled with water, and rotated at reduced speed for 4 hr. more. Discharge is then started through a 1/4-in. opening and the pulp is run out while rotating into a splash box, discharge time being about 1 hr. Pulp from the splash box runs to a mercury trap and thence over blankets. Blanket concentrate is returned to the barrel with the next charge; blanket tailing (0.5% >100-m.; 23 oz. Au per ton) goes to the concentrate thickener Cost of amalgamation and refining is 24¢ per ton milled.

At WENDIGO (*Tref Bul M4B12; Bul 342 CIMM 414*) charge for a 3×4-ft. barrel is 800 lb. concentrate (pyrrhotite, pyrite, chalcopyrite) at 40 to 50% solids, 35 lb. $Ca(OH)_2$, and 4 to 6 lb. $K_2Cr_2O_7$. This is heated with steam to 150° F. and is then ground 8 hr. at 24 r.p.m. with a charge of 50 lb. of 1-in. balls; 30 lb. of mercury is then added and grinding is continued 30 to 45 min. Product is run through a Pierce amalgamator and over a plate. Tailing carries 0.5 to 0.75 lb. Au. Use of sodium amalgam instead of dichromate caused bad sickening, a mercury loss 4 1/2 times normal, and a tailing assaying 2.1 oz.

At GOLDEN ANCHOR (*IC 7024*) gravity concentrate from the grinding circuit is ground 6 hr. with mercury, lye, and about 1 doz. 4-in. balls. Recovery is 76% on plant feed. Tailing, 14 oz. Au per ton, is shipped.

At GOLDEN CHARIOT (*15 MMt 443*) blanket and riffle concentrates from a quartz ore are ground 2 or 3 hr. with a small number of 4-in. balls, 2 lb. soda ash, and about 1 oz. NaOH.

At ALASKA-JUNEAU (*IC 6236*) a gravity concentrate assaying $20,000 to $30,000 per ton is charged to a 2×4-ft. barrel with 600 oz. of mercury (cleaned in HNO_3) and 3 lb. slaked lime, and is ground 5 to 6 hr. at 30 r.p.m. with one piece of 6-in. shafting. The mill is discharged, while running, through a 1/2-in. hole into a 4-ft. mechanical batea which overflows a galena product assaying $75 per ton in gold. The amalgam, cleaned further by hand, contains 60 to 65% Au. Mercury loss is 1%.

At PORCUPINE UNITED (*IC 6470*) grinding time in a 16×36-in. mill was 10 hr. with 250 oz. mercury and 3 lb. slaked lime, using worn balls.

At GLOBE & PHOENIX mine, Southern Rhodesia (*51 IMM 253*), corduroy and trap concentrates containing pyrite and stibnite with some pyrrhotite, tetrahedrite, and chalcopyrite, are ground in pans, aerated by blowing in a 5 : 1 pulp for about 12 hr., and, after settling and decantation, are amalgamated in a barrel without further grinding. Introduction of the aerating step reduced mercury consumption 80%. Amalgamation tailing re-enters the concentrating circuit, and is therein subjected to magnetic concentration to remove iron introduced by the pans.

At PRESTON EAST DOME (*62 CMJ 535*) 1,900 lb. per day of mineral-jig concentrate from the grinding circuit is charged to a 3×4-ft. rubber-lined barrel with 12 lb. CaO and 3 lb. NaCN and is ground for 8 hr. The barrel is then opened, filled with water, rotated to mix, the charge is allowed to settle, and the solution is siphoned off. Fresh water and 40 lb. mercury are added and the barrel is revolved at low speed for 30 min. The charge is run to a cone elutriator, overflow to a plate, plate tailing to cyanidation. The high cyanide charge is justifiable since all solution goes to the cyanide plant. The ore contains about 0.02% As and 0.85% S. Mercury consumption averages 1.8 lb. per day; gold recovery is 59% of total plant recovery.

Grinding amalgam. At ATLANTA (*loc. cit.*), clean-up amalgam is ground 3 hr. in a laboratory ball mill with hot water and enough quicksilver to make the amalgam soft. It is then washed with hot water to remove sulphides, cleaned with a magnet to remove metallic iron, and wiped dry with a cloth. A part is set aside for dressing plates (see Art. 6) and the balance is squeezed to about 60% Hg.

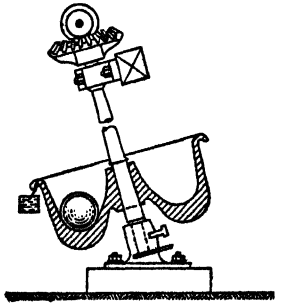

FIG. 9. Berdan pan.

Concrete mixer as amalgamator is recommended in *IC 6787* for cleaning up pan residues from sluice-line clean-ups. A charge of 2 or 3 pails in a 1- or 2-ft. hand- or power-driven mixer, with 1 or 2 lb. of quicksilver and a few 3- or 4-in. cobbles, run for 1 hr., is prescribed, with panning of tailing. Pan tailing might well be sent back to the sluice line.

Pan Amalgamation

Pan amalgamators are the Wheeler pan (Sec. 5, Fig. 81), the Berdan pan (Fig. 9), and similar mechanisms. Wheeler pans range from 1 to 6 ft. in diameter.

The Berdan pan is usually from 3 to 5 ft. in diameter, 18 to 24 in. deep, tilted 20 to 30° from the horizontal, and run at 10 to 30 r.p.m. It has 1 to 3 large cast iron balls. It has low capacity as a grinder but is a good amalgamator for <1/4-in. feeds.

An arrastre (Sec. 5, Fig. 79) may also be used, but is slow and more difficult to clean up.

Operation may be either batch or continuous, usually the former. Pulp density during grinding in a Wheeler pan is usually the highest that yet gives sufficient fluidity not to put excessive strain on the machine. Charge recommended by *Rose* for a 5-ft. Wheeler pan with 14-in. walls is 300 lb. and he recommends 12 to 14 r.p.m. for such a pan. In *IC 6787* a speed of 60 r.p.m. (diameter uncertain) is recommended, with a pulp density that will keep mercury suspended. Time of grind is 1 to 4 hr. Rough separation in both types of pan is made by gradual dilution and overflow, with final clean-up in a gold pan.

A pan differs essentially from a barrel for cleaning up sulphidic concentrates in that the pan pulp is thoroughly aerated, whereas the barrel pulp is ground under conditions of restricted oxidation. Hence where oxidation is desirable the pan should ordinarily be employed.

9. RETORTING AND MELTING

Separation of the bulk of the mercury from the precious metals and reclamation of the mercury are effected by filtration and retorting. The last of the mercury (1 1/2 to 2%) is driven off from the gold, and some impurities are slagged off by melting with suitable fluxes. The steps in the operation are (*a*) cleaning the amalgam, (*b*) filtration, (*c*) retorting, (*d*) melting, (*e*) casting the bullion.

Cleaning amalgam consists in thinning it by addition of mercury, if it is not already thin (*e.g.*, sluice amalgam); working it by hand in a gold pan, or with a pestle in a mortar, or by power in a small clean-up pan, usually in hot water, to cause insoluble material to be freed and float, and perhaps to grind particles of locked middling; separating the freed material by overflow, skimming, and with a magnet, with intermediate pouring back and forth in clean porcelain containers to aid in bringing extraneous material to the surface.

Filtration is effected by pressure. In small-scale work the amalgam is squeezed by hand through a strong, tight fabric such as heavy muslin or canvas, the filter being held under water to prevent spirting of the extruded mercury. On a larger scale a plunger press, mechanically or hydraulickally driven, or an air press is used.

At ATLANTA an air press consisted of a 3-in. pipe, 13 in. long, capped at both ends. The lower cap was drilled with 1/8-in. holes on 1/4-in. centers; the upper cap had a flexible air connection. In charging, a 60-m. wire screen was placed in the bottom and was covered with 2 thicknesses of tight muslin. The soft amalgam was then charged, the top screwed on, and, after blowing condensate from the air line, air at 100 lb. pressure was admitted.

Brick amalgam after hand pressing contains 60 to 70% Hg; after power pressing it may contain 60 to 70% Au. The expressed mercury contains about 0.15% Au at normal temperature. Hand-pressed brick will usually weep a small amount of mercury, if permitted to drain for a few hours in a funnel; such draining is normally permitted.

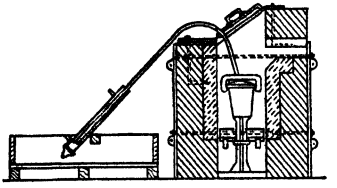

FIG. 10. Pot retort.

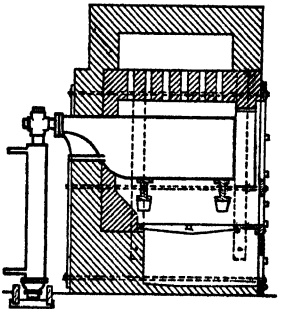

FIG. 11. Horizontal retort.

Retorting is done in pot-type (Fig. 10) or cylindrical (Fig. 11) retorts, according to the quantities handled. The retort is usually coated with chalk, clay, slime, or a mixture of fire clay and graphite, then thoroughly dried and charged with broken amalgam brick to a level such that the level of the molten charge will be well below the outlet (1/3 to 1/2 full) in order to prevent puking. The retort cover is luted on with an asbestos gasket and, usually, a fire-clay paste, and a water-cooled condenser commonly comprising an inclined pipe *a* and an enclosing water jacket *b* (Fig. 12) is attached. The condenser is arranged to discharge under water *c*

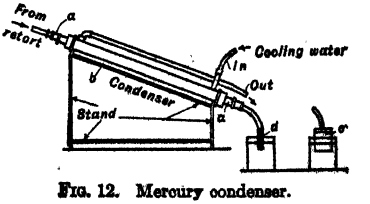

FIG. 12. Mercury condenser.

or into a wet sack *d*, the important factor being to insure that an insufficient volume of water can be forced back, in case the fire fails, to fill the condenser pipe and run into the retort. The retort furnace should be such as to permit application of heat to all sides of the retort and well up to the bend in the outlet riser of a vertical retort, *i.e.*, with a long flame as with oil or wood. In large retorts treating amalgam from base-metal ores, the outlet pipe may choke just beyond the heating zone, owing to condensation of lead and zinc; a poke-hole should be provided for dealing with such a contingency.

Heating is started slowly and the temperature is brought up to the boiling point of mercury (675° F.) in 10 to 15 min. Here the fire is checked and regulated to maintain a steady trickle of condensate over a period of several hours until distillation ceases, when the fire is increased slowly until the retort comes up to a bright red heat, where it is held for a few minutes. The fire is then drawn and the retort allowed to cool until it can be opened.

Caution. Care must be taken during distillation and at the time the retort is opened to guard against inhaling mercury fume.

Retort sponge that has been finished hot contains 1 to 1 1/2% Hg; the vapor contains only a trace of gold.

Retort capacities range from 1 lb. to 200 lb. of amalgam.

Shovel retorting is frequently practiced in small placer operations when the value of the mercury in the small quantities of amalgam handled is less than the cost of reclaiming it. It consists simply in placing the amalgam in a shovel, frying pan, or the like and heating over an open fire until the mercury is driven off. Tinned or galvanized metal should be burned to a red heat and scoured free of coating before use for such service. The heating surface should be clean, and the amalgam should be placed on 2 or 3 thicknesses of paper before heating starts to prevent sticking. Care must be taken, as by working outside, or in a well-ventilated enclosure, to avoid inhaling mercury vapor.

Potato condenser is made by digging out in a half of a large raw potato a central cavity about twice the diameter and height of the piece of amalgam to be shovel retorted. This is then placed over the amalgam during the heating. It condenses some of the mercury, which can be recovered by triturating and panning.

Melting is done to reduce gold to a compact form in which danger of loss in handling is reduced, and to reduce impurities in so far as this can be done as an incident to simple melting and casting. Except where large quantities of gold are to be handled, when special tilting furnaces are used, melting is done in graphite crucibles, which should be sound and be dried by heating for several hours well above the boiling point of water. The charge consists of the retort sponge and, if the sponge is relatively pure, sufficient borax glass to form a cover at least 1/2 in. thick above the molten bullion. If the sponge is dark colored and dirty the flux should contain silica and soda in addition to the borax, and if sulphides are suspected, some niter.

At ATLANTA a charge consisted of 560 oz. sponge, 5 lb. soda ash, 2 lb. borax glass, and 1 lb. powdered silica. Fusion in an oil-fired furnace required 4 hr. At TALACHE a small amount of niter was added additionally.

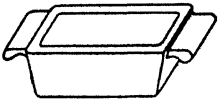

FIG. 13. Bullion mold.

Weight loss in melting ranges from about 0.5 to 7%.

Casting is done in iron molds (Fig. 13) which are brick shaped, with walls converging downwardly. The mold should be heated, and thoroughly smoked, or coated with a heavy oil such as cylinder oil or boiled linseed oil before pouring. Slag should be saved for sale or for plant retreatment. Slag adhering to gold may be loosened by washing with nitric acid.

10. AMALGAMATION PERFORMANCE

For flowsheets and metallurgical results at particular mills see Sec. 2, Arts. 21, 22.

Recovery of gold by plate amalgamation supplemented by grinding amalgamation of battery and trap concentrates ranges from about 60 to 97%, depending largely upon the character of the ore. SILVER RECOVERY is usually 20 or 30% less than gold recovery. With the lower recoveries, amalgamation is supplemented by concentration or cyanidation except in the smallest and crudest plants. With such supplement amalgamation is justified because of its cheapness and speed in producing bullion and cash returns. Thus at TALACHE the COST chargeable to amalgamation was only 6¢ per ton of mill feed out of a total milling cost of 64¢. At HOMESTAKE (Sec. 2, Fig. 51) the cost of scalping out coarse gold by amalgamation is 2.85¢ per ton of mill feed.

Mercury loss depends upon the minerals in the ore, the state of oxidation of the ore, the amount of agitation and/or scour to which the mercury is subjected, the purity of the mercury added and the degree to which it is contaminated before recovery, the means of recovery and of guarding against loss, pulp temperature, and the care and skill of the

operators. Loss in sluices is normally 5 to 10% of the mercury added, and may run up to 25% under adverse conditions such as steep slope, heavy gravel, and leaky sluice lines (*IC 6787*). At Oroville losses ranged from 2 1/2 to 5% on the large dredges and ran up to 5% on the smaller ones (*Bul 127 USBM 143*). Loss is increased by a high clay content in gravels. Loss is ordinarily much lower in lode mills. At PILGRIM, 0.3% loss is reported; at ARGONAUT the loss was 0.17 oz. troy per ton of mill feed, and at TALACHE 0.035 oz.

Cost of mercury during early 1930's was $58 to $68 per flask in 75-lb. flasks; $1 per lb. in 5- and 10-lb. lots at chemical supply houses; and double this at mining camp drugstores and the like (*IC 6787*).

11. DIFFERENTIAL DISINTEGRATION

Differential disintegration includes scrubbing and scuffing (Sec. 10), differential grinding, and decrepitation. The first two methods depend on differences in hardness of the minerals to be separated; the last upon differences in internal stresses set up by heat.

Differential grinding has been employed occasionally, in conjunction with subsequent size separation, to effect a rough concentration of softer from harder materials. Ordinarily a tumbling mill is used for the grinding. The essence of the treatment is to subject a mixture of substances of different hardnesses to a light grind. The method is most effective when the natural grain size of the hard mineral is larger than that of the soft.

At MISSOURI-KANSAS ZINC CORP. (*87 A 94*) tailing in which the blende was present as corners and edges on hard lime rock, and as inclusions in soft, porous, cellular limestone was subjected to a quick ball-mill grind in a thick pulp. A sizing-assay test of the product is given in Table 5; it shows that after grinding, 50% of the material remains on the 14-m. screen, but it contains less than 10% of the values. A 50-t.p.h. mill operated on a feed containing 2.44% blende rejected >3/16-in. (round-hole) tailing assaying 0.54% blende; undersize was sized and concentrated on jigs and tables and by flotation; tailings were, respectively, 0.67, 0.61, and 0.40% blende, and combined concentrates assayed 55 to 60% metallic zinc; milling cost was 20¢ per ton (1929).

Table 5. Sizing-assay test of a differential grind on zinc tailing (*After Banks and Johnson*)

Screen, mesh	Feed, weight, %	Product		
		Weight, %	Blende, %	Value, %
>4-m.	49.0	27.6	0.20	5.2
8....	26.5	12.2	0.20	2.3
14....	15.8	10.3	0.21	2.0
28....	.....	12.4	0.48	5.6
35....	.....	7.1	1.14	7.6
48....	.....	4.0	1.80	6.8
65....	.....	5.0	2.43	11.4
100....	.....	4.4	3.15	13.0
150....	.....	4.0	3.49	13.0
200....	.....	5.7	2.88	15.4
<200....	8.7 *a*	7.2	2.64	17.8
Total....	.....	100.0	1.08	100.0

a <14-m.

Differential grinding of the matrix in which Arkansas diamonds occur, together with a diamond, was done in a laboratory mill by A. M. Gaudin at Columbia University, resulting in effective disintegration of the matrix without breakage of the diamond. A light grind to disintegrate cemented diamond-bearing Brazilian gravel prior to separation by sizing and jigging of fines was practiced for a time in a mill designed by A. D. Hughes (*PC*).

Differential grinding of barite with sink-float separation of unground gangue in the mill is practiced at EL PORTAL (see Sec. 3, Fig. 5).

The brittleness of sulphides and their relatively high specific gravities are utilized in grinding for flotation, and in cyanidation in cases in which precious metals are included in sulphides. Procedure involves closing the grinding circuit with a classifier and operating it at relatively high dilution, under which circumstances, sulphides already reduced to the *mog* fail to overflow, but are returned to the mill for further grinding. The brittleness of the precious-metal tellurides was utilized in early days at Cripple Creek (Huntoon, *87 A 102*) to effect partial concentration, by screening crushed ore, either rejecting the coarse when the feed was a low-grade tailing, or taking the fines as an enriched product for special treatment when the feed was of higher grade. Before the advent of flotation the slimes from crushing copper- and lead-sulphide ores for gravity concentration invariably were markedly enriched over the feed, often to the point that they constituted a smeltable product. Recent attempts to concentrate some of the oölitic red hematites of the Alabama region are based on the friability of the hematite and lime as compared to the siliceous impurity.

It has been found (*TP 581 USBM 44*) that there is a relationship between the size of grinding medium and the natural sizes of the grains that it is desired to pulverize differentially. Thus with

the red hematite ore, when a 6~100-m. feed assaying 31.5% Fe was ground with 1.5-in. rods or with 2-in. balls and separated at 100-m., the undersize assayed 39% Fe and 24% insol., but when $1/4 \times 3/32$-in. punchings were used as the grinding medium, the undersize assayed 45.8% Fe and 11.5% insol.

The entire practice of wash-ore treatment on the Mesabi is based on the difference in hardness between the altered matrix of quartz sand and cementing hematite, and the unaltered taconite (Sec. 2, Art. 28).

A Colorado carnotite ore consisting of quartz grains cemented by earthy carnotite and clay containing V, U, and Ra was subjected to differential grinding and separation of <325-m. material; recovery in the fine material was 83% of the V in a concentrate containing 8.3% V_2O_3 (*139 # 11 J 43*).

Another form of differential disintegration is utilized in asbestos concentration, where crushing of the crude is done in ways that encourage fluffing up of the asbestos and pulverizing of the associated rock, whereupon sizing and/or air classification is used to effect final separation.

Decrepitation is applicable to a few minerals only, *e.g.*, barite, spodumene (*IC 7084; RI 3336*), and fluorite. The method comprises close sizing, heating to the temperature of decrepitation, and then rescreening, the undersize being concentrate. Despite that considerable concentration can be thus effected, the method was not used commercially, even before the applicability of flotation to the separations was discovered.

12. DIFFERENTIAL PHASE CHANGE

Differences in melting and boiling points of the ingredients of mineral crudes afford a means of separation used infrequently in the case of inorganic minerals, but upon which the entire art of separation of organic crudes is founded.

Liquation consists in heating a mixture of solids of different melting points to a temperature above the melting point of one of them but not of the others, whereupon the melted material drains away from the unmelted. The best known instance in the treatment of mineral crudes is that of sulphur (Sec. 3, Art. 42). The method is also used to further enrich hand-sorted stibnite concentrates. Precious metals are similarly sweated out of tellurides, but the process is not utilizable commercially.

Preferential solution is commonly used to effect differential phase change for the purpose of separation. Thus gold and silver in ores are preferentially dispersed in a liquid aqueous phase by cyanide solutions, and in this phase are readily separated from the residual solid host by draining, decantation, and/or filtration. Copper may be leached similarly with water alone (CHUQUICAMATA) or by dilute sulphuric acid or ferric sulphate (OHIO COPPER; RIO TINTO, etc.). Salt is preferentially leached from underground domes by pumping down water and thereafter pumping up the brine, leaving associated rock in the brine. Nitrates are leached with water in Chile (see Sec. 3, Art. 29).

Preferential crystallization of a part of the ingredients of a solution, with subsequent separation of the solid and liquid phases, is the common method of recovering sodium chloride and a number of the other ingredients of natural brines (see Sec. 3, Arts. 6, 25, 31, 36, 37).

Distillation. Separation by distillation depends upon differences in boiling points of minerals. If a mixture of minerals of different boiling points is heated to a temperature that is above the boiling point of one of them but not of the others, that one vaporizes and, in vapor form, is readily separated from unvaporized material. If the differences in boiling points among the ingredients of the crude are large, as between mercury and the associated gangue minerals, separation is sharp (see Sec. 2, Art. 32). Sulphur also is sharply separated from its ores by distillation (see Sec. 3, Art. 42). If, on the other hand, differences are small, as in the usual crude petroleum, it is impossible to vaporize even the lowest-boiling constituent without at the same time vaporizing a part of the ingredients of higher boiling point, and repetitive distillation and its counterpart, CONDENSATION, performed under closely controlled temperature conditions, are necessary to effect even reasonably clean separations.

Roasting, calcining, and drying are important processes in which beneficiation, or a step therein, usually accompanied by more or less concentration, is effected. Lime burning (Sec. 3, Art. 24), cement burning (Sec. 3A, Arts. 3 to 5), calcination and sintering of manganese concentrates (Sec. 2, Art. 31), drying of clays, chalks, diatomites, meerschaum, pumice, and tripoli (Sec. 3, Arts. 4, 8, 13, 17, 26, 32, 44), dehydration of gypsum (Sec. 3, Art. 21), reducing roasting of oxide iron ores (Sec. 2, Art. 28) and flash roasting of pyrite (Sec. 2, Art. 29) to render them magnetic, and calcination of arsenical gold ores to render them amalgamable (Art. 10) are typical examples.

SECTION 15

DEWATERING

REVISED IN COLLABORATION WITH THE ENGINEERS OF THE DORR COMPANY

ART.		PAGE
1.	Introduction	01
2.	Draining	01
	THICKENING	
3.	Principles	04
4.	Intermittent thickeners	12
5.	Continuous thickeners	12
6.	Design of settling tanks	21
7.	Washing in thickeners	23
8.	Filter thickeners	24

1. INTRODUCTION

With the exception of dry crushing and a limited number of operations such as air classification, hand sorting, pneumatic tabling, and electrical concentration, the greater part of ore dressing is carried out in water. The complete or partial elimination of this water from one or more of the products at some stage in the flowsheet is invariably necessary.

DEWATERING is the separation of a mixture of solids and water into two parts, one of which is relatively solid-free and the other relatively liquid-free, with respect to the original mixture. Draining alone is a fairly effective method of eliminating water from coarse sands, but if slimes and fine sands are present, they tend to run off with the water. If the solid matter is so fine that slight movement maintains it in uniform suspension in the water, separation is effected by bringing the water substantially to rest, and allowing the solid particles to settle under the influence of gravity (SEDIMENTATION). This operation, coupled with continuous overflow of water and bottom withdrawal of partially dewatered solid, is called THICKENING. If a solid-free liquid and a solid fraction containing less water than can be obtained by sedimentation are required, filtration is employed (Sec. 16). When thickening is combined with filtration in a single tank, the dewatering action is known as FILTRATION-THICKENING. Substantially complete separation of water and solid is attainable only by evaporating the water (DRYING).

Frequently a combination of methods is employed in dewatering. Coarse sand, for example, may be separated from a slime fraction, and be dewatered by draining, while the slime is thickened prior to filtration. In general, as much water as possible is removed by sedimentation, which is relatively inexpensive, in order to reduce the volume to be handled by the more costly operation of filtration; the latter, incidentally, functions better when given a relatively thick feed. Removal of water by drying is the most expensive operation of all; hence it is usual practice to eliminate as much water as possible by filtration, leaving only the moisture contained in the filter cake for removal by drying.

2. DRAINING

Stationary drainage is a crude form of filtration. The simplest case is a pile of wet material on a floor; the liquid settles to the lowest layers of the heap and, if the supporting surface is inclined slightly, runs away. Some residual liquid is held by adhesion at the surface of the solid particles and by capillarity between adjacent solid surfaces; the volume of water thus retained depends primarily on the size of the solid particles; the finer the grains, the greater the particle area, and the greater the volume of retained water; the lower the specific gravity of the solid the higher the percentage moisture in the drained solid. In some cases a screen forms the draining surface. Bins may replace floors. Rectangular or circular tanks with false bottoms of screen cloth or coarse fabric, coco matting, jute or filter cloth, supported on slats, are frequently used for dewatering fine sandy concentrate.

Another method used with bins and tanks involves more or less watertight construction wherein water is continuously replaced by sand and overflows during filling. When the

bin is full, free water is run off and the bin dug out. In both cases the feed must be diverted to a duplicate unit while the dewatered sand is being removed.

At Santa Barbara (*112 J 1056*) lead-carbonate concentrate at the rate of 74 t.p.d. was sent alternately to two concrete tanks 10 ft. wide by 60 ft. long by 4 ft. deep. The moisture content was reduced from 84% to 14%. At Le Roi No. 2 mill (*114 J 1121*) about 30 t.p.d. of flotation concentrate was fed at one end of a series of two tanks each 1 ft. deep, 2 ft. wide, and 22 ft. long, with baffles 6 in. high at intervals along the bottom and double burlap screens at the outflow end. As concentrate accumulated it was tamped down for two or three minutes every hour or so. The material shoveled out when the tank was full contained only 10 to 15% moisture. The froth broke down by flowing across the semi-dry surface of the settled solid. This method is not so cheap as thickener-filter operation but is much cheaper in first cost.

Cone dewaterers are cheap and highly effective for coarse sands. Both diaphragm cones and the automatic types (Sec. 8, Art. 8) are widely used in this service.

Mechanical Drainage

Mechanical drainage devices differ from the stationary apparatus in that they treat small portions of material at a time, in thin layers. These drain rapidly and are as rapidly moved away by the mechanism. Types for coarse materials (>1/4-in.) are screens, perforated-bucket elevators, and scraper dewaterers; finer materials, down to 325-m. if slime-free, can be dewatered quite satisfactorily in mechanical classifiers.

Screens. Any type of screen (Sec. 7) can be used for dewatering, but trommels are most frequently used for lump material and vibrating screens for finer gravels and sands. Screens in this service should be set on as low a slope as will transport the material; vibrators with a pronounced movement are best for accelerating drainage and moving fine sand over the screen. Flat screens are highly effective for >1/8-in. sands; for finer sizes other means are probably better.

Dewatering elevator is a bucket elevator (Sec. 18, Art. 12) with the buckets perforated with holes as large as possible which will yet retain the solid to be dewatered. They are commonly used for dewatering coarse coal, and also for draining heavy-medium from concentrate in the H-H sink-float machine (Sec. 11, Fig. 76). They should be set on a slope sufficient to prevent drainage from one bucket from falling into following buckets, and should be run at relatively low speeds (<100 f.p.m.) in order to afford time for drainage. They are not good for fine sands, both because drainage is slow and because drained sand packs in the buckets and does not discharge at the head. Chain elevators are better than belt because the belt tends to lead drainings into lower buckets.

Scraper dewaterers are used principally for dewatering coarse sand products, and, less frequently, to effect a rough sand-slime separation.

Shovel wheel used at Tigre Milling Co. (*97 J 227*) is shown in Fig. 1. Feed entered through a chute, sand settled to the apex of the V-shaped trough, was scraped up-slope by the wheel, revolving counter-clockwise, and discharged through a slot; water or slime overflowed a lip on the opposite side of the box at a level about 4 in. below the sand discharge. The V-box in Fig. 1 was 42 in. long and 52 in. wide, the wheel revolved 8 r.p.m. and treated 125 to 135 lb. solid per min. Performance was affected by the speed and inclination of the shaft and the character of the feed pulp. At the Santa Barbara mill of the Amer. Smelters Securities Co. (*112 J 1055*) two 48-in. wheels, revolving in opposite directions so as to raise sand along the transverse centerline of the box, were set in a V-box 9 ft. 6 in. long by 4 ft. wide. Feed was the oversize from a 0.5-in. trommel, fed at the rate of 430 tons per 24 hr.; it contained 42.5% solids; the sand discharge, 70% solids.

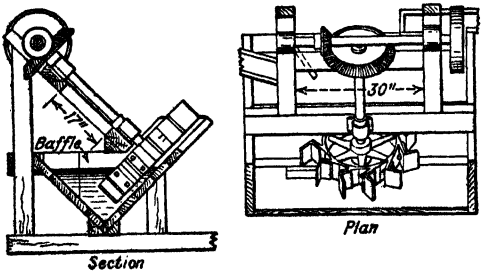

Fig. 1. Shovel wheel.

Rotoscoop consists of a cylindrical tank, 6 to 15 ft. diam. and 12 to 18 in. deep, with a feed launder at one side and an overflow lip at the opposite side comprising 150° of rim arc. A disk or table slightly smaller in diameter than the tank is supported a few inches above water level on a slowly revolving central shaft. Three slant-bottom scoops, with sides curved on radii from the axis of the central shaft, and of a width equal to about one-third the table diameter, depend with equal angular spacing from the table. The table moves in such a direction that the scoops shovel up settled sand from the tank bottom, while further sand pushes that above it upward until it emerges on top of the table. A curved plow, adjacent to the feed launder, scrapes sand off into a sand chute. Water in the elevated sand drains out and is squeezed out in the chutes above the water level. Rated capacity is 20 to 150 t.p.h.

Sand wheel (Fig. 2) consists of a wheel *A* carrying convex, perforated scrapers *S* at the periphery, revolving in a narrow trough *B* supported in a V-box. The wheel in Fig. 2 is 14-ft. diameter to the tips of the scraper blades. A form with hinged angle irons which tilt at the zenith to drop the load onto sloping plates at the sides is described (*34 #10 PQ 42*). The Simplicity wheel (*42 #5 RP 26*), for dewatering <1/8-in. sand, is 14(diam.)× 3-ft. with 24 @ 4-cu. ft. buckets, the bottoms lined with 12-m. cloth over the perforations; it is driven at 2 r.p.m. by a 10-hp. motor.

The most efficient speed for dewatering combined jig and table tailing (<9-mm.) at Doe Run Lead Co. was 2 r.p.m. The 14-ft. machine handled 1,500 tons of such material per 24 hr. The sand discharge carried about 15% moisture. The power requirement was less than 2 hp. A more elaborate

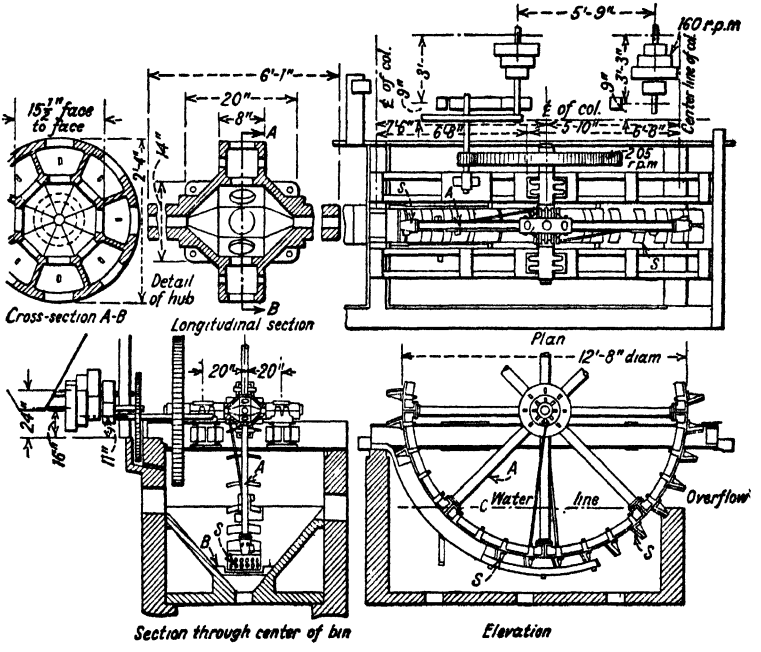

Fig. 2 Sand wheel.

form lifts the sand in buckets carried on a large wheel dipping into the pulp, decants water as the wheel revolves, and finally discharges dewatered sand at the top of the revolution by automatically tilting the buckets. (*111 J 291.*)

Mechanical classifiers with slant-bottom tanks are effective dewaterers for fine sands. Moisture content of sand discharge increases, however, as the sand decreases in limiting size.

Drag classifiers (Sec. 8, Art. 4) are probably most commonly used, on account of cheapness. A small drag with tank bottom about 6 ft. long and set at 45° slope, built as a self-contained unit with floor support and individual motor, is standard equipment for dewatering rougher-jig concentrate prior to cleaning on jig dredges. Drags are also widely used for coal.

At Federal Lead Co. the classifier shown in Fig. 10, Art. 8, dewatered 700 tons per 24 hr. of <12-mm. sand from 77% water to 20%. At Britannia (*113 P 696*) flotation concentrate was sent to a drag elevator and thence to bins. The drag discharge contained 20% moisture and the bin discharge 8% moisture. This method of treatment is applicable only to very quick settling concentrate; normally this limitation would exclude flotation concentrate. Cutting a slot 1 1/2 to 2 in. wide across the bottom, at a distance about one flight space back from the sand lip, is reported (*41 #1 RP 93*) to improve dryness of sand materially; the slot permits a small puddle and some sand to drop through, the sand being sluiced back to the pool. At Compagnie du Boleo (*133 J 163*) a bucket-type drag conveyor placed in a box at the end of a launder carrying granulated slag lifts out the bulk of the solid dry enough to be deposited on a belt conveyor, while water and fine solid overflow the side of the box; the buckets are directed against the flow on the bottom run, and drain on the lift and upper run.

Spiral classifiers (low-discharge type, Sec. 8, Art. 3) are small, relatively cheap, and effective for dewatering finer sands than are the drag machines. They have been used to a considerable extent for gravity concentrate in metalliferous mills. They are also used frequently for commercial sands. They have some advantage over other tank dewaterers in that the drainage slope is greater than the axial slope because the sand progresses along one side of the semi-cylindrical tank bottom.

At MIDVALE a 30-in. simplex machine, bottom slope 2 1/4 i.p.f., 13 r.p.m., dewatered 45 tons per 24 hr. of <28-m. slime-free sand from 72% water to 19%. The spiral type has been generally adopted for final thickening of ferrosilicon heavy-medium in sink-float operation, magnets along the bottom being used to increase sedimentation forces. An Akins classifier at CRYSTAL FLUORSPAR CO. (*142 #12 J 65*), dewatering fluxing-grade concentrate, overflows <150-m. sand assaying 20% SiO_2 from a feed containing 4% SiO_2.

Rake classifiers for dewatering are usually fitted with a dewatering lip (see Sec. 8, Art. 6, ***Length of tank***). Typical moisture contents of sands are: Combined jig and table tailings, 15%; copper gravity concentrates, 20% as discharged, 8% after further drainage in bins; <20-m. ilmenite concentrate at NATIONAL LEAD CO., 16%; anthracite fines, 28 to 30% as discharged, draining further to 15% in cars; silica sand, 20% as discharged, 6 to 8% later after draining in stockpiles; salt crystals (NaCl evaporated from brine), 25% as discharged. In general, moisture content of metallic concentrate will range from 15 to 20% at 20-m. limiting size to 25 or 30% at 200-m.; that of material of 2.65 sp. gr. will average 2 or 3% higher throughout the same size range.

At MORENCI (old plant), shaking-table concentrate (164 tons per 24 hr. with 383 tons of water) was dewatered in 2 @ 4 1/2×18-ft. Dorr classifiers fitted with a vacuum connection under canvas near the sand-discharge end. The rake product of the first machine contained 12% moisture; overflow went to the second machine, the sand product of which contained 8% moisture. See also Sec. 2, Fig. 159.

Capacity in general dewatering service is easy and may be reckoned at the maxima for sizes corresponding to the finest grains in the feed (see Sec. 8, Table 5).

THICKENING

Thickening is the process of concentrating a relatively dilute slime pulp into a thick pulp, *i.e.*, one containing a low percentage of moisture, by rejecting liquid that is substantially solid-free.

3. PRINCIPLES

SLIME is the term used in milling practice to describe a suspension, in water, of the finely divided fraction of pulverized ore; also the solid, whether suspended or after settling and/or drying. The terminology is not precise, *e.g.*, the overflow of a mechanical classifier or cone guarding the discharge of a grinding mill may be called SLIME as distinguished from the coarser sand, even though the separation be made at upward of 0.5-mm. size; the overflow of a hydraulic classifier is called slime, more or less irrespective of the size of the coarsest grains. Some writers (*41 A 398, 42 A 752*) define slime as crushed rock in water when the rock is of such fineness that it will pass a 150- or 200-m. (0.1- to 0.075-mm.) screen.

The solid particles in mill slimes are rock or mineral fragments formed by crushing operations, and secondary minerals such as steatite, talc, and clayey substances that have been disintegrated and dispersed by wetting. These latter substances are often called TRUE SLIMES. A slime product separated in the early stages of comminution, which contains, therefore, an exceptionally high percentage of true slime, is called PRIMARY SLIME. Its satisfactory thickening is one of the difficult problems in milling. The product formed by fine-grinding the crystalline part of the ore contains but little true slime; it is often called SECONDARY SLIME; settlement is normally rapid.

Every slime suspension consists initially of individual solid particles separated from other solid particles by a layer of water. Irrespective of whether the largest particles are 0.5-mm. (20-m.) or 0.07-mm. (200-m.) diameter, they are enormously larger than the smallest particles, large numbers of which are in the size range below 0.001-mm. The difference in settling behavior of these two classes is much greater than that between the coarse and fine particles met in hydraulic classification. The granular particles settle slowly under the influence of gravity, at definite rates approximated by Stokes' equation (Sec. 8, Art. 1). The fine particles may not settle at all, or they settle at a rate so slow as to be of no practical benefit in thickening. The viscosity term in Stokes' equation is relatively very large for these fine particles, and effects such as Brownian movement and the

associated electrical repulsion between particles may counterbalance effectively any residual tendency toward downward motion due to gravity. These particles are in colloidal or semi-colloidal state.

Colloids. The word "colloidal" describes a state of matter. A colloid is not a certain specific kind of matter but any matter in a certain specific state. The COLLOIDAL STATE is characterized by particles of such minute size that they are capable of maintaining their state of uniform dispersion in a given medium, without the necessity for expenditure of mechanical work on the mixture. The dispersed substance, the colloid, may be gaseous, liquid, or solid, and the dispersing medium may, likewise, be in any of these three states, except that gas is never at the same time the disperse and dispersing phase. The mixture is a COLLOIDAL SOLUTION. Such solutions differ from the more familiar types of solution in most solution characteristics except that of maintaining uniformity without requiring mechanical work to be done; their boiling and freezing points do not differ materially from those of the dispersing medium, they do not dialyze in the same way or exhibit osmotic pressure; finally, the dispersed particles are visible, with ultramicroscopic equipment, and separable by means of ultra-filters. SEMI-COLLOIDAL PARTICLES have, in a considerable degree, colloidal properties. The dispersed particles in a colloidal solution are said to be PEPTIZED or DEFLOCCULATED. The converse condition, resulting from aggregation of the dispersed particles, is called FLOCCULATION, and the aggregates are called FLOCCULES or FLOCS.

Dispersion. The effective mechanism underlying colloidal solution, with accompanying dispersion, is adsorption of ions at the surfaces of the dispersed particles, one kind of ion (+ or −) being anchored to the solid and the other (COUNTER ION) free-swimming in the solution, except as it is held by attraction to the anchored ions. The result is electrical charging of the particle surfaces. Some investigators consider the system a "floating condenser," with inner and outer charged layers of opposite sign (HELMHOLTZ DOUBLE LAYER). The charges cause the particles to repel each other, thus preventing coalescence and settlement. Ion adsorption may be made preferential and specific to the particular colloidal substance by suitable selection of introduced electrolyte with respect to the particular solid (see ***Flocculating agents***). In this way a given solid may be charged negatively in one instance and positively charged in another. Beans and Eastlack (*37 ACS 2667*) showed that only those ions are adsorbed that will, under proper conditions, enter into chemical combinations with the dispersed substance, and that the amount or intensity of adsorption is greatest for those ions that form with the substance chemical compounds of greatest stability.

Flocculation of a dispersed solid may be brought about by several means, all, probably, different facets of the same basic treatment. In natural ore pulp it is rare for all of the mineral species to be dispersed; usually only the silicate minerals are in such state. It has been shown (*87 A 217; 153 A 453*), in a sufficient number of independent cases to eliminate coincidence, that Brownian movement of mineral particles and dispersion thereof are concomitant; also that the dispersed particles are of macroionic character and that flocculation occurs when the macroionic nature is destroyed. Methods of such destruction, postulated on the ordinary concepts of ionic chemistry, are (*a*) suppression of the ionization or (*b*) removal of the anchored ions that impart the macroionic character. Thus Fitt *et al.* (*ibid.*) have shown that zinc sulphide dispersed by sodium arsenate comprises negative macroions from which arsenate ion may be removed by electrodialysis, or by solution in excess of sodium arsenate, and that in both cases flocculation and precipitation occur. Freshly broken galena in ordinary distilled water has lead sulphoxy compounds at the surface (Sec. 12, Art. 3) and is flocculated. It is rendered macroionic and dispersed by sodium carbonate; the macroions are negative, indicating anchorage of carbonate ion, while the low mass solubility of lead carbonate indicates that lead is the counter ion. The dispersion is flocculated by addition of hydrogen ion, which forms the relatively soluble bicarbonate, *i.e.*, dissolves the anchored compound; or by adding xanthate or sulphide ion, both of which replace carbonate ion at the macroion surfaces because of the extremely low solubility in water of the corresponding lead salts; these, for the same reason, are insufficiently ionized to charge the surface enough to effect dispersion. Addition of an excess of sodium carbonate, which may either suppress ionization of lead carbonate by common-ion effect or dissolve it by salt effect (the mechanism is not established, although the fact is) also flocculates carbonate-dispersed galena. Quartz is dispersed in distilled water, indicating reaction with water after the fashion

$$\square SiO_2 + H_2O \rightarrow \square SiO_3^{=} + 2H^+$$

Stability of the dispersion is increased by a low concentration of sodium carbonate, probably by reducing the concentration of hydrogen ion ($2H^+ + CO_3^{=} \rightarrow HCO_3^{-} + H^+$) and thereby driving the silicate-water reaction to the right and inducing more dense charging

of the silica macroions. Excess of sodium carbonate causes flocculation, the indicated reactions, in order, being hydrogen ion with hydroxyl, with consequent substitution of Na^+ for H^+ as the available counter ion. But Na is not an effective counter ion for SiO_3^- because of the relatively high solubility of sodium silicate. The dispersion is also destroyed by adding acid (H^+), the effect of which is to suppress ionization of H_2SiO_3.

Some dispersions, but not all, may be broken by mixing them with others of opposite sign. The old static-charge idea was that the oppositely charged particles attracted each other and came together under the force of the attraction to form aggregates (floccules) of such size that they sank. That did not explain the failures. On the hypothesis herein proposed, the macroions, the counter ions, and any other ions present in the two dispersions are to be considered simply as ionic parts of the colloidal solutions. If, on mixing, conditions in the new system are so changed as to break the anchorage of captive ions, or drive back their counter ions in sufficient numbers, or supply other counter ions which reduce solubility products too greatly, etc., flocculation will occur; otherwise not.

Dispersions are frequently broken and flocculation effected by gelatinous inorganic precipitates and by organic sols of the type that can, under suitable conditions, form gels (*e.g.*, starch, gelatine, glue).

Physical aspects of flocculation are inferable from observation and by analogy with coalescence of bubbles and drops. When destruction of a dilute aqueous dispersion and aggregation of the particles into larger masses are observed under a microscope, the successive steps are: (*a*) cessation of Brownian movement and rapid settling of suspended particles (or rise in the case of oils of low specific gravity); (*b*) horizontal movement of the settled particles along the surface of the slide, when water currents are induced mechanically or by heating; (*c*) collision, followed in most cases by adhesion. (Collision does not occur before cessation of Brownian movement.) When liquid or gaseous emulsions break and the particles thus collide, they usually coalesce. Such action results in decrease of interfacial area of the system and, since the interface is a seat of energy, there is a corresponding decrease in the energy of the system. This is, therefore, action in accord with that form of statement of the second law of thermodynamics which asserts that spontaneous movement in any system which is the seat of energy is in the direction that results in decrease in the total energy of the system. By analogy it may be inferred that in flocculation of a solid system there is a corresponding reduction in the extent of solid-liquid interfacial area and energy. It must be admitted, however, that it is difficult to imagine sufficient reduction in the interfacial area of jagged solid particles to account for the resistance of flocs to redispersion under the influence of agitation (mechanical, work) sufficiently vigorous to break oil droplets. It is possible that in such case there is breakage, but that collision is at the same time accelerated, and that the maintenance of an apparently static flocculated state is actually a highly dynamic phenomenon.

Flocculating agents. Other than the cases discussed under *Flocculation*, little or nothing is known positively of the chemistry of flocculation in ore pulps, and most practical control proceeds on rules-of-thumb, of which the outstanding is: "Use lime."

Lime is widely effective, cheap, and easy to handle. Other common inorganic flocculants are potassium alum, ferric chloride, ferrous sulphate, magnesium sulphate, and sulphuric acid. The basis of the effectiveness of acid on siliceous pulps has been discussed. Lime in pulps containing base metals, alum, and iron salts all tend to form gelatinous precipitates, which entangle and sweep down particles mechanically, entirely apart from any surface reactions. Blood albumen and glue are effective in acid pulps, *e.g.*, those produced in the manufacture of aluminum sulphate from clay or bauxite. Causticized flour and causticized starch (see Sec. 12, Art. 10) have been found to be effective in neutral or alkaline pulps. Use of these reagents to handle the red mud pulps from the Bayer Process in thickening have made it possible to reduce the unit areas required from 50 or 60 sq. ft. per ton of solids per 24 hr., to 10 or 15 sq. ft. Magnesium sulphate is used to flocculate titanium dioxide after the ground pigment has been sized and it is necessary to thicken the finer fraction for dewatering. Highly saline waters (sea water, saline lake water, some mine waters) are usually effective flocculants, due probably in some cases to solubilisation by salt effect and in others to suppression of ionisation by mass action.

It has been established empirically with respect to electrolyte flocculants that whether the positive or negative ion is the effective one, effectiveness tends to increase with valence. The increase in effect is stated to be of the general order $1 : x : x^2$, and with metallic ions to be 1 : 35 : 1,023 (Wheatham, *Theory of solution, 396*). This is explicable chemically on the scores that the compounds of high-valent ions are, in general, less soluble than the corresponding compounds of low-valent ions, and that, in reacting with ions that are essential parts of the disperse system and precipitating, they tie up more such ions per ion introduced.

Simultaneous flocculation and dispersion is practiced on Hydroseparator feed at Champion No. 1 plant of Pittsburg Coal Co. The feed is a mixture of bituminous coal and clay. Causticised starch flocculates the coal, and sodium metasilicate disperses the clay, thus aiding separation of clay by overflow.

Zones of settlement. A flocculated pulp does not necessarily settle rapidly. Settling rate is dependent upon a number of other factors which must be determined experimentally in every case. Coe and Clevenger (*55 A 356*) have shown that a thickening suspension passes through a succession of stages shown diagrammatically in Fig. 3.

Cylinder *E* represents the pulp sample after thorough mixing. In *F* some slight settlement has taken place; zone *A*, of clear solution, has formed; just below it lies zone *B*, which is pulp of the consistency of the feed minus any coarse material *K* that has segregated. Below zone *B* is a transition zone *C*, which may be vanishingly thin in some pulps and may fill the entire space between zones *A* and *D*, with consequent elimination of zone *B*, in others; it increases in solid concentration from top to bottom. Zones *B* and *C* are commonly designated COLLECTIVE SUBSIDENCE ZONES, as distinguished from zone *D*, which is the COMPRESSION ZONE. Zone *D* consists of flocs in rather intimate contact, somewhat like a pile of sponges. Cylinders *G* and *H* are similar to *F*, except for the growth of the compression zone at the expense of the subsidence zones. The CRITICAL POINT is pictured in cylinder *I*; zones *B* and/or *C* have just disappeared, and zones *A* and *D* have just made contact. Cylinder *J* shows the pulp in the final stage of settling, or in what is known as ULTIMATE DENSITY. The pulp is as thick as it will become under the given conditions.

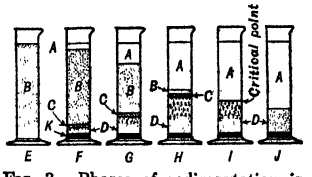

FIG. 3. Phases of sedimentation in intermittent thickening.

This diagrammatic representation assumes a pulp of average feed dilution and a certain degree of flocculation. With the exception of zones *A* and *K*, the zones may not be sharply defined, although zone *D* is usually present and characterized by the presence of vertical channels as indicated, produced by exudation of water.

Settling curves for various types of pulps are shown in Fig. 4. These are obtained by plotting the position of the top of zone *B* (Fig. 3) against time. Each curve is characterized by substantially constant slope in the early part, a length of rapid inflection, and a slow approach (the more rapid, the sharper the inflection) to an asymptote.

The lower curves of Fig. 4 are characteristic of very dilute suspensions in which clarification is gradual throughout, its rate (slope of the curve) being determined by the free-settling velocity of the slowest-settling flocs. The upper curves are those obtained with pulps in which a sharply defined upper surface of the solid mass appears suddenly shortly after sedimentation starts (LINE SETTLEMENT). The early part of the curves corresponds physically to items *E* to *H* of Fig. 3; the period from critical dilution to ultimate density (Fig. 4) corresponds to *I*, Fig. 3. Thereafter the curves are asymptotic to the time axis, *i.e.*, there is no further compaction. During the time of collective subsidence the settling rate is substantially constant and approximates that of the average falling velocity of the individuals in a suspending medium having a density equivalent to that of the pulp under observation.

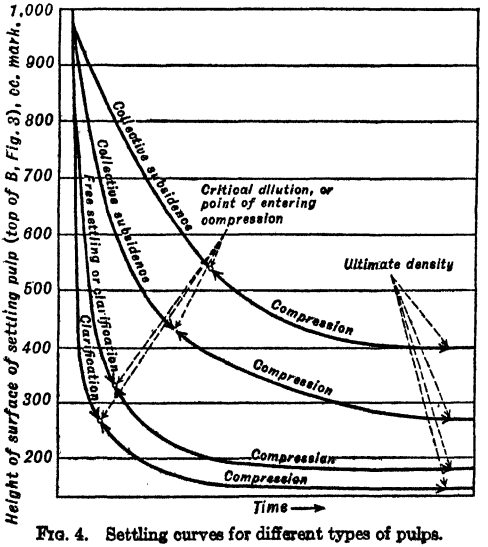

FIG. 4. Settling curves for different types of pulps.

Zones *B* and *C* are normally absent or unrecognizable in dilute and slightly flocculated pulps, and demarcation between zones *A* and *D* does not become sharply defined until critical dilution is reached. It is possible, however, that the lower curves have short rectilinear portions in the region of critical dilution and that the upper curves have short, much steeper sections, each having an inflection region normally not caught experimentally in the short interval preceding the period of line settlement.

Effect of various substances on settling rate of ore slimes, as determined by Ralston (*101 J 991*), are given in Table 1. Shellshear (*8 Aa 12*), working with 2% suspensions of extreme fineness and of many minerals, found that the powders could be arranged in three groups, *i.e.*, rapid-settling, which comprised blende, calcite, garnet, pyrite, magnetite, stibnite, galena, and fluorite; intermediate-settling, consisting of chalcopyrite, bornite, molybdenite, and quartz; and slow-settling, cassiterite, wolframite, feldspar, steatite, mica schist, rhodonite, and scheelite. Sulphuric acid increased the settling rate of all classes; calcium chloride was particularly effective on siliceous material; lime was not so potent as calcium chloride but, like it, was most effective with siliceous material; sodium hydroxide in small quantities dispersed siliceous material, but accelerated settlement in greater concentrations;

Table 1. Effect of added substances on settling rates (*After Ralston*)

Ore *v*	Horn Silver, *a*		Grand Central, *a*		Bullion Coalition, *a*		Ophir Hills, *a*	
	Per cent.		Per cent.		Per cent.		Per cent.	
Added substance	Amount added	Increase in settling rate *c*	Amount added	Increase in settling rate *c*	Amount added	Increase in settling rate *c*	Amount added	Increase in settling rate *c*
Oxalic acid	0.08 *b*	−40	0.04	0				
Carbolic acid		0						
Citric acid	0.0125	−31	0.01	*e*	0.0125	−80		
	0.05	−33						
	0.10 *d*	−22						
Hydrochloric acid	0.025	−16 *f*	0.025	−5				
			0.204	−15				
Sulphuric acid	0.04	−11		*g*			0.0516	−10
	0.16	+6						
Sodium hydroxide	0.025	+41 *h*	0.0516	*i*	0.0258	*j*	0.0516	+37
			0.4	*w*				
Sodium carbonate	0.05	+46 *k*	0.026	*i*				
			0.050	*l*				
Sodium silicate	0.1	*m*	0.02	−5	0.0516	*p*		
	0.4	*n*	0.05	*j*				
Ferrous sulphate	0.82	−30 *b*		*q*				
Alum	0.025	−23	0.0258	*g*			0.02	−7
Sodium chloride	1.0	*r*	No effect	No effect	No effect	No effect		
Calcium hydroxide	0.00625	+18						
Tannin	0.025	−60	0.0516	*j*, *s*	0.026	*t*		
Gelatin	0.0013	+90 *u*	0.0006	+50	0.006	+5		
			0.0012	+90				
Saponin	0.005	−21	0.005	−12				
Egg albumen	Very small effect			*g*				
Glue	0.0001	+32	0.0001	+50				
Soap	0.005	+48	0.001	+80				
Ox-blood	0.5	*l*	0.00516	+62				

a See Table 1*a* for analysis.
b Increasing amounts below this maximum gave increasing retardation.
c Negative sign indicates retardation.
d Subsequent addition of NaOH increased dispersion.
e Deflocculates pulp, especially the iron.
f Final pulp density unaffected.
g Very slight deflocculation.
h Final pulp, 30% solids.
i Deflocculates iron.
j Deflocculates ore.
k Final pulp, 35% solids.
l Deflocculates ore completely.
m Slight retardation, 32% final solids.
n Slight retardation, 24% final solids.
p Deflocculates ore; sulphuric acid subsequently added flocculates and increases settling rate.
q Effect small but change from sedimentation to consolidation settling occurs higher in tank.
r No effect up to this amount.
s 0.10% alum in addition flocculates.
t Deflocculates and sands settle.
u Final pulp, 32% solids.
v All pulps 9.4% solids.
w Speed increasing.

alum and sodium bicarbonate, added together, produced a gelatinous precipitate that swept down the suspension; potassium permanganate accelerated settlement greatly. Bruhl (*107 J 1089*) noted that slaked lime is 30% more soluble than unslaked and produces a more marked settling effect. Sulman (*17 IMM 312*) stated that ammonium chloride and other ammonia salts have marked coagulative effect on ore slimes. Nichols (*17 IMM 322*) found no marked difference in effect between $BaCl_2$ (83 mg. per 200 cc.), H_2SO_4 (17 mg. per 200 cc.), lime (56 mg. per 200 cc.), and NaCl (167 mg. per 200 cc.) in a 2% pulp, but on the basis of weights of electrolyte added, H_2SO_4 was the most potent. At Anaconda (*49 A 472*), settling a 2.5% slime pulp to 10% in Callow cones, 1 lb. per ton of ferrous sul-

Table 1*a*. Analyses of ores used in Ralston settling tests, Table 1

Ore from	Horn Silver, per cent.	Ophir Hill, per cent.	Grand Central, per cent.	Bullion Coalition, per cent.
Insoluble	53.6	51.5	69.0	12.5
CaO	2.2	4.97	2.45	1.1
Fe	4.4	4.3	13.05	15.0
Al_2O_3	*a*	*a*	2.8	8.6
MgO	Tr.	*a*	Tr.	8.7
Zn	6.3	3.9	0.58	29.9
Pb	7.4	3.83	0.05	0.21
Cu	0.25	1.16	1.04	0.13
S	6.13	4.69	*a*	0.92
As	*a*	0.25	*a*	*a*
CO_2	1.37	*a*	2.60	19.04

a Undetermined.

phate increased settling rate (capacity) 30%; 2 lb. 40%; and 5 lb. 50%. Sodium chloride, 0.25, 0.5, and 1 lb. per ton, respectively, increased the rate 3% to 4% only. A mixture of glue and ferrous sulphate, 0.25 lb. of each per ton, was remarkably effective; it increased the capacity of a 28×10-ft. thickener from 195,000 to 311,000 gal. of slime pulp per 24 hr., and on round-table concentrate caused the same settlement in 1.25 min. that required 11 min. with untreated pulp. Nicolai (*103 J 1064*) found that $MgCl_2$ in the end liquor from German potash plants, added in the proportion of 1 cc. of solution per liter of slime, increased settling 67 to 95%.

The ionic constitution of the pulp, both as regards particle surfaces and solution, is substantially completely unknown in all of these cases, so that no proper analysis of the data is possible. They must be taken simply as statements of occurrence with particular ores under conditions essentially unknown.

Effect of viscosity in flocculent pulps is complicated by the fact that such pulps behave as plastic solids rather than true liquids (Castleman, *Tech. Note 231 NACA*). While dispersed suspensions do not exhibit yield values (do not become plastic) until the concentration is relatively high, usually between 10 and 50% solids, flocculent pulps may show this characteristic at as low a figure as 3% solids. Plasticity of flocculent pulps results in entrainment, since for any given yield value there must necessarily be particles of such size and density enclosed in some flocs as to impose shearing forces thereon equal to or less than the yield value; these, therefore, remain entrapped. Entrainment often has marked influence on the rate of settling of the flocs, as well as on the entrained particles. Sand or other granular material entrained displaces water and thereby increases the average density of the floc and, consequently, its settling rate. Entrapped air may cause light flocs to float; at least it slows the settling rate materially.

Flocculating agents often precipitate dissolved salts in flocculent state; these tend to entrain fine dispersed solids and thus, in general, increase settling rates.

Density difference between particle and medium is important in determining the rate of fall of particles in the presence of other particles. Fall of a large particle may be retarded considerably by increase in the effective density of the medium owing to the presence of smaller particles of the same substance. Still more drastic change may be caused by the presence of large amounts of fine particles of a higher specific gravity (see Sec. 11, Art. 28).

Consolidation in the compression zone is the final stage of thickening. Water liberated no longer flows evenly around each particle as in the upper zones, but forms channels which are readily observed in settling tests. The flocs rest upon and support each other. Further thickening is due to compression by the weight of overlying particles. After the water between flocs has been displaced, further consolidation occurs by exudation of water from within the flocs through the floc pores, as they become distorted under the superincumbent weight (Deane, *37 AES 659*). The weight required is a function of the yield point of the floc structure. Equilibrium is eventually reached between the imposed force and the increasing yield resistance; at this point thickening ceases. Further dewatering can be accomplished only by mechanical rupture of floc structures, with accompanying adjustment of different sized particles to accommodate themselves to smaller volumes; or by increase in exuding forces. Movement of thickener rakes or of the picket-fence type of mechanism accomplishes mechanical rupture to a marked degree; filtration is an example of increase in exuding force.

Effect of heat on slime settlement is ordinarily to increase the rate. Richards (*2 OD 1147*) called attention to this fact and Dorr (*49 A 224*) stated that heating may prove an economical method of adding 10 to 20% to the capacity of a thickener. Nichols (*97 P 54; 17 IMM 321*) and Ashley (*98 P 831*) showed that the increase in settling rate was, in general, inversely as the fall in viscosity of the water.

A recent thickener-area test (Art. 6) on a cement rock at the Dorr Co. laboratory indicated a required area of 15 sq. ft. per ton at 40° F. and 10 sq. ft. at 70° F. (a 33% increase in settling rate; corresponding coefficients of viscosity of water (C.G.S. units) are 0.0154 and 0.00984 (a decrease of 36%). Serious decrease in capacity of thickeners in winter, particularly as the temperature of the water nears freezing, is a common experience. Nicolai (*103 J 1064*) states that the thickener overflow of a German lead-zinc mill carried from 0.02 to 0.1 gm. solid per liter on warm summer days and 0.2 to 0.4 gm. on cloudy or windy days.

Figs. 5 and 8 summarize experiments by Ralston (*101 J 890*); these confirm the viscosity relationship over a range extending to nearly 40% solids; beyond that another relationship is indicated. It is not improbable that, in the Ralston pulps, sedimentation was substantially by free-settling up to the pulp densities marked by the upper inflection points of the

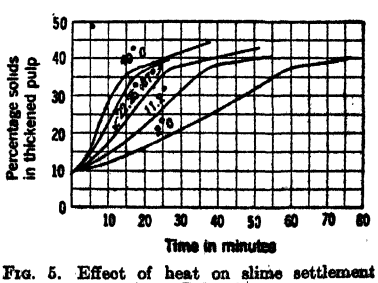

FIG. 5. Effect of heat on slime settlement (*after Ralston*).

curves in Fig. 5. Under such circumstances obedience of fine particles (uninfluenced by Brownian forces) to Stokes' law (Sec. 8, Art. 1) is well established. At higher densities, particularly in flocculated pulps, consolidation depends upon rise of water through small channels between flocs and upon squeezing of water from the flocs. Such flow should be subject to Poiseuelle's law (Sec. 16, Art. 1), which states that the flow rate, while inversely proportional to the viscosity of the liquid, is also influenced by other resistances. These would, in part, account for the marked decrease in settling rates beyond the inflection points. Rigidity of the flocs themselves causes further resistance.

Table 2. Effect of pulp temperature on settling rate of Anaconda slime (*After Laist and Wiggin*)

Pulp temperature, degrees F.	Time to settle from depth of 17.5 in. to 3.5 in., minutes		
	Average	Maximum	Minimum
35	41.7	57.0	29.5
40	38.0	50.7	27.3
45	35.0	45.2	25.0
50	31.7	40.2	23.0
55	28.5	36.0	20.5
60	26.0	33.0	18.3
65	23.3	29.8	16.0
70	21.2	26.7	13.8
75	19.5	25.0	12.0

Results of tests at ANACONDA (*49 A 479*) are given in Table 2. Laist and Wiggin call attention to the fact, as a matter of practical design, that while the average summer pulp temperature of 50° is greater than that at the average winter temperature of 38°, yet other factors may enter to make the minimum rate at 50° less than the maximum, or even the average rate at 38°, and they conclude that pulp temperature is, therefore, a relatively unimportant factor in thickener-plant design. One such factor is convection currents caused by uneven sun heating or by wind. If intentional heating is to be practiced, the thickener should be insulated, heating should be done outside the thickener, and the surface should be protected from air currents.

Occasionally the benefit from heating is greater than would be expected from viscosity considerations. In certain cases at least this is due to flocculation, which may result either from increased chemical activity resulting in destruction of the macroionic state essential to dispersion or from increased particle movement and collision induced by convection currents in the heated liquid. Conversely Nichols (*17 IMM 293*) reports a case in which high temperature (200° F.) with accompanying violent agitation resulted in deflocculating a pulp and thereby markedly decreasing its settling rate.

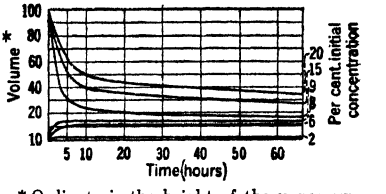

* Ordinate is the height of the upper surface of the settling material, divided by the total height of the water surface, expressed as percentage.

FIG. 6. Relation between settling rate and percentage of solids in a colloidal clay suspension (*after Free, 101 J 681*).

Dilution. The effect of the dilution on settling rate is roughly given by the equation $R = K(D - X)$, where R = settling rate, K is a constant, D = dilution, and X is a constant. Graphs for some pulps show considerable curvature, either convex or concave (Fig. 6), and some are slightly S-shaped (Fig. 7) but others are nearly straight (Fig. 8).

Table 3 shows that the same relation holds in the mill and that laboratory settling rates are substantially the same as mill performances. Fig. 9 (*101 J 893*) shows that the difference in settling rates is not merely the one to be expected by reason of the greater freedom of the falling particles in dilute pulps but that at any given pulp density in the consolidating layer the settling rate (velocity of subsidence of the surface of the consolidating layer) is greater the more dilute the feed pulp.

The effect of electrolytes on settling rate is greater, the more dilute the feed pulp.

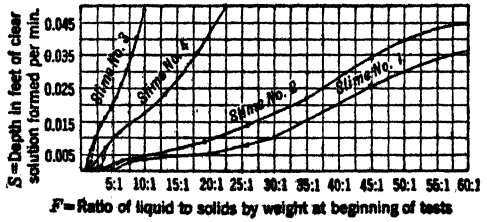

FIG. 7. Effect of dilution on settling rate of ores (*after Mishler, 94 J 646*).

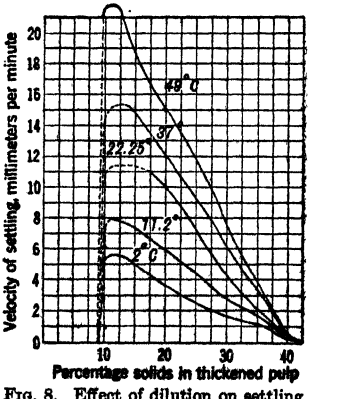

FIG. 8. Effect of dilution on settling rate (*after Ralston*).

Table 4 (*101 J 991*) shows that with 5% solids in the feed, an increase of 35% in settling velocity is effected by addition of 0.025 % lime, while with 20% solids the same lime addition produced only 4%

Table 3. Effect of feed-pulp dilution on settling rates in laboratory and mill (*After Mishler*)

Mill						Laboratory
Number of days averaged	*F*	*D*	*T*	Tons of overflow per 24 hr.	*S*	Depth in feet of clear solution formed per minute
6	3.9	2.1	155	279	0.014	0.016
3	4.2	1.9	136	313	0.015	0.017
3	4.5	2.0	162	405	0.020	0.018
3	4.8	2.7	161	338	0.017	0.020
1	5.1	2.1	161	483	0.024	0.021
1	5.3	1.9	165	561	0.028	0.022
5	5.5	2.6	150	435	0.021	0.023
4	6.0	2.7	134	442	0.022	0.024
2	6.5	2.8	150	555	0.027	0.027
7	7.0	3.2	115	437	0.021	0.030
2	8.0	3.1	128	627	0.031	0.035

F Liquid: solid ratio in feed, by weight. *D* Liquid: solid ratio in discharge, by weight. *T* Tons dry slime per 24 hr. $S = 0.00004912\ T(F\text{-}D)$. Mill data are results of daily samples over 49-day period from a 24×12-ft. Dorr thickener. Laboratory tests were of 10-min. duration and were made in glass cylinders 0.1 ft. diam. and 2 ft. high.

Table 4. Effect of electrolytes on pulps of different densities (*After Ralston*)

Solids in feed, per cent.		CaO added, per cent.				
		0	0.0031	0.0062	0.0125	0.025
5	Increase in settling velocity, per cent...	0	17	39	39	35
10		0	1	18	7	20
20		0	0	3	3	4
5	Height of surface of settling solids when change from sedimentation to consolidation settling occurred.....	23	34	60	70	96
10		67	.....	160	190	180
20		197	197	197	198	198

increase in velocity over that with no lime. Addition of lime also caused the change from sedimentation to consolidation settling to take place much earlier in dilute pulps than it occurs without lime, while no such change occurred with thick feed pulps.

Capacity of a thickening tank is not determined by the settling rate at feed dilution but by the subsidence rate of a more or less concentrated pulp, since a zone of such higher concentration forms in any continuous thickening apparatus (see Art. 5).

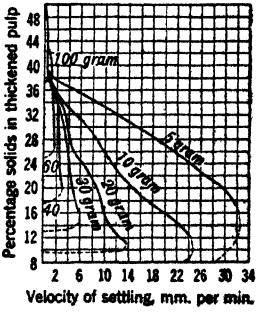

FIG. 9. Effect of dilution on consolidation of slimes.

Thickeners

Thickeners are tanks of such capacity that the time required to fill them at the rate of flow of the stream to be thickened is sufficient to permit the upper surface of the solid matter to settle a safe distance below the overflow level and the lower stratum of settled solid to consolidate to the desired consistency. They are provided with an overflow weir and one or more bottom-discharge openings so located as to draw off the settled solids uniformly. They are built either for intermittent or for continuous operation. The latter type may be discharged by gravity or mechanically. Intermittent thickeners have found their greatest use in the RAND gold mills; continuous thickeners, first of the gravity-discharge type but latterly of the mechanical type, are almost universal in the United States.

Centrifugal thickening is accomplished in power-driven machines, which consist of one or more drums capable of being rotated at high speeds within a closed casing. The feed enters at the axis of rotation, and the clear water and solids, which may be continuously or intermittently discharged, are eliminated at opposite ends.

4. INTERMITTENT THICKENERS

Nonmechanical intermittent thickeners are usually rectangular tanks or elongated ponds fed at one end and overflowed at substantially the same level at the other end. Feeding continues until the overflow contains more than an allowable load of solid, when the feed stream is diverted to another tank. After the solids have settled, the supernatant clear liquid is drawn off through pipes variously arranged for adjusting the drawoff level. The thickened solid is finally flowed, sluiced, or pumped out and the tank is ready for another charge. The drawoff level for liquid is varied by means of pipes placed at various heights in the walls, or by means of a jointed standpipe from the top of which short lengths are easily removed, most frequently by means of an inclined pipe, joined by means of a 90° ell with a horizontal pipe in the bottom of the tank (see Fig. 10).

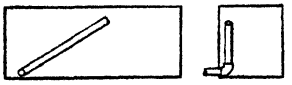

FIG. 10. Adjustable draw-off for intermittent settling tank.

The horizontal cross-section of intermittent settling tanks should be such that the rate of rise of liquid therein is less than the settling rate of the surface of the solids in collective subsidence.

Thomas and Osterloh (*17 JCM 214*) state that two slime ponds with a total circumference of 6,000 to 7,000 yds. are sufficient to handle 30,000 tons of thick Rand slime per month.

Mechanical intermittent thickeners are the intermittent-discharge cone, old-style centrifugals, and the filter-type thickeners.

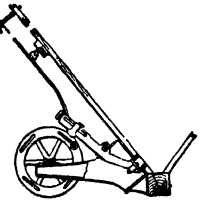

FIG. 11. Ayton intermittent pulp-discharge valve.

Cone. Valve for intermittent gravity discharge of thickened pulp from a cone, V-box, or pyramidal box is shown in Fig. 11. Discharge intervals depend upon the amounts of solid fed; the greater the amount the shorter the intervals between openings. Open periods are usually short to prevent rushes. Such intermittent discharge decreases the difficulties in maintaining thick spigot products.

Old-style centrifugal thickeners comprised vertical cylindrical bowls, center-fed for a sufficient interval to charge the walls with the thickened pulp, liquid meanwhile overflowing. The bowl was thereupon stopped, when the accumulated solid slumped or was scraped down to a suitable discharge opening.

Filter thickener. See Art. 8.

5. CONTINUOUS THICKENERS

Continuous thickeners are of gravity-discharge type, in which the thickened product flows out through a spigot under a hydrostatic head induced by the body of contained pulp; mechanical-discharge gravity type, in which sedimentation is effected by gravity, but mechanical means are used to aid or effect transport to the discharge port, and other mechanical means are (usually) employed to control flow through the port; and continuous centrifugal thickeners, in which centrifugal force effects sedimentation, and discharge of thickened product must be induced by mechanical scraping devices acting against the centrifugal action.

Thickening cones are typified by the Callow cone (see Sec. 8, Art. 9), provided with goose-neck spigot discharge to decrease head on the underflow.

Table 5. Performances of cone thickeners at New Jersey Zinc Co. (*Q*)

Mill	1 Franklin	2 Franklin	3 Franklin	4 Franklin	5 Franklin	6 Ogdensburg
Make	N.J.Z.Co.	N.J.Z.Co.	Allen *a*	N.J.Z.Co.	Allen *a*	Allen *a*
Size, diam. × depth, ft	6×6	16×13 1/2	3×3	16×13 1/2	8×8	8×9
Nature of solids	Sand and slime	Jig sand	Jig sand	Jig sand	Table sand	Table feed
Feed: Tons solid per 24 hr	6.5	96	96	68	70	10
% of solids	1.61	13.0	30.5	4.0	16.0	10.5
Underflow, % solids	3.56	30.5	74.0	22.4	75.9	50.0
Overflow, % solids	0.63	Clear	Clear	Clear	0.3	0.5
Settling area, sq. ft. per ton of solids per 24 hr	4.3	2.1	0.07	2.9	0.71	5.0

a Automatic control of underflow density (see Sec. 8, Art. 8).

At the Great Falls plant of ANACONDA COPPER CO. (*49 A 423*) 8-ft. cones treating <200-m. slime were fed with pulp carrying 1.5 to 2% solids at the rate of 25 to 30 g.p.m. or 0.58 to 0.70 g.p.m. per sq. ft. of settling area. Overflow contained 2 to 2.5% of the total solids fed and 90% of the total water. Spigot product ran about 8.75% solids and was discharged through a 3/8-in. goose-neck spigot under 24 in. head. Thirty 8-ft. tanks handled 1,000,000 gal. of slime per 24 hr., carrying 80 tons solid. At the Anaconda plant (*49 A 473*) the capacity of an 8-ft. tank treating <200-m. slime from a different ore was only 12.3 g.p.m. per tank or 0.29 g.p.m. per sq. ft. of settling area. The spigot discharge contained 9 to 14% solids, representing 90 to 95% of the total solids fed (*46 A 253*).

Data on the performances of Allen and N. J. Zinc cones operating on zinc ores at the Franklin and Ogdensburg plants of the New Jersey Zinc Co. are given in Table 5.

Table 6. Effect of overfeeding a cone-type thickener

Rate of feed, g.p.m. per sq. ft.	Solids recovered, % total feed
0.19	100
0.21	95
0.23	90
0.27	85
0.30	80
0.33	75
0.37	70

Effect of overfeeding is shown in Table 6, which presents results of a test on a rectangular settling tank 10×9 1/2×8 ft. (deep), center-fed, treating ANACONDA slime with 2.5% solids. Lead ores have been treated at the rate of 30 to 35 g p.m. of feed containing 1% solids, giving a spigot product with 25 to 40% solids and an overflow carrying 5 gm. per gal.

At ALASKA-GASTINEAU 8 1/2-ft. tanks were used for dewatering a feed containing 88.5% <200-m. at the rate of 20 tons solid per 24 hr. in a pulp containing 96% moisture. The spigot product contained 8.8% solids and 88.4% <200-m., the overflow 1.7% solids. At HOMESTAKE (*99 J 412*) 26-ft. conical-bottom tanks, 23 3/4 ft. deep, treated 406 tons of slime pulp (sp. gr. 1.036) per 24 hr., making 84 tons underflow containing 33 tons solid and 322 tons clear overflow. This pulp contained no reagent, and water was at winter temperature. Increase in the feed rate to 505 tons pulp per 24 hr. decreased the density of discharge to 33 tons solid in 86 tons pulp but caused cloudy overflow.

Use of cones. One of the objections to the use of cones for thickening is the fact that they cannot normally be built in large sizes on account of the great headroom required and the structural cost, so that a multiplicity of units is required. Also slimes build up on the sloping sides, causing irregular flow to the apex and making it difficult to maintain a uniform sludge discharge. On the other hand, cones are cheap and easy to support; they are definitely indicated when the gallonage to be treated is small.

Baffles set at an incline in a thickening tank increase settling capacity. Fig. 12 illustrates the action. The thickness of the layer of consolidating solid through which water must be expelled is lessened by inclining the container, and the number of surface pores available for egress of water is increased, both of which changes make for an increased rate of expulsion. Table 7 is a summary of the results of tests in a rectangular tank 3 ft. wide by 3 ft. deep by 9 ft. long at ANACONDA (*46 A 250*), with baffles of corrugated iron set at 45°, tops 4 to 6 in. below the overflow level and the lower ends about 9 in. from the tank bottom. The tank was fed at one end and overflowed the other; baffles were arranged in various positions without causing marked differences in result.

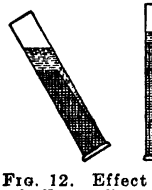

FIG. 12. Effect of baffles on slime settlement.

When high removal of solids is desired, there is little to choose between the open and baffled tanks, but with less complete solid removal the capacity of the baffled tank is markedly greater than that of the open tank.

Table 7. Comparison of baffled and open settling tanks at Anaconda (*After Hayden*)

Feed rate, gallons per foot of width per 24 hr.	Per cent. of solids settled	
	In baffle tank	In open tank
1,883 *a*	100.0	100.0
2,000 *a*	99.9	94.8
3,000	97.5	67.8
4,000	94.0	53.5
5,000	90.3	44.8
6,000	86.8	38.0
7,000	82.0	32.6
8,000	75.9	28.0
9,000	67.8	23.8

a Extrapolated.

Mechanical-discharge gravity-type thickeners comprise a cylindrical tank, shallow in comparison to its diameter, with peripheral overflow and a central bottom-discharge outlet; a centrally located feed well; and a power-driven rotary plow, positioned near the bottom, for moving settled solids to the bottom-discharge opening. Bottom discharge by gravity is unsatisfactory; modern installations almost invariably use pumps designed for constant volumetric displacement. A diagrammatic assembly is shown in Fig. 13. Tank *a* may be of wood stave or steel, as indicated, of concrete, or, rarely, is simply a pit dug in the ground, with suitable supports (usually on concrete piers) for the mechanism. Overflow launder *b* is generally an angle rolled to suitable radius, clipped onto the tank wall, and grouted tight, with a pipe outlet through the wall; a leveling strip *c*, comprising a rubber belt stretched around the upright leg of the launder angle, is adjusted with a wooden mallet

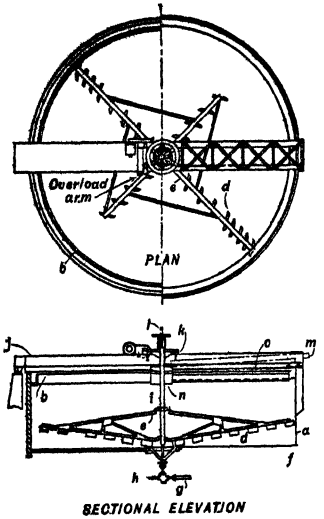

Fig. 13. Single-compartment rotary-rake thickener.

to equalize overflow from a full tank. In the type shown in the upper plan view (Dorr) blades *d* on the 4-armed rotating framework *e* rake settled solids to the central discharge cone *f*, whence thickened pulp flows through pipe *g*, with suitable valves *h*, to a pump, normally of diaphragm type (Sec. 18, Art. 19), located at one side at or near the overflow level. The lower plan view shows spiral rake arms, carrying a continuous spiral band for plowing. The raking mechanism is carried, in the smaller tanks, on a hollow vertical shaft *i*, which, in turn, is supported on a roller- or ball-type thrust bearing carried on support *j*, comprising a beam or truss diametrically across the tank, or a central pier. Rake arms are set on a slope. When the feed is low-grade, solid is allowed to build up in flat-bottomed tanks to the slope of the rakes, but if the feed pulp contains much value, as, for instance, flotation concentrate, the bottom is frequently filled in with cement concrete by pouring in a relatively stiff slow-setting mixture of sand and cement with rakes operating in the lowest position. When concrete tanks or concrete bottoms are used these are built to the desired slope initially.

Drive mechanism (Fig. 13, item *k*) is a worm gear on the central shaft *i*, usually driven by worm from the shaft of an individual motor. In the older forms of Dorr thickener and in some small modern thickeners overloads are absorbed temporarily and an overload alarm is given by the mechanism shown in Fig. 14. Block *b* abuts against the end of shaft *c*, which carries the driving worm. If the resistance of the plows, transmitted through the worm gear, is great, block *b* is pushed back against the pressure of spring *d* and pointer *e* is moved toward the left. Dangerous resistance causes the pointer to move over until a copper plate *f* closes an electrical circuit and an alarm bell is rung, or a light lighted, etc. Provision is made to raise the rakes, as by a hand wheel *l* on a threaded rod suitably attached. (See also Fig. 15.)

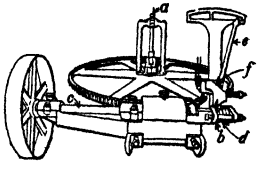

Fig. 14. Overload-alarm mechanism (*Dorr*).

Hardinge Auto-raise overload relief is shown in Fig. 15. Central shaft *a* is carried on rollers *b* which rest in spiral slots *c* in the downward extension *d* of drive tube *e*, which is supported, through the medium of gear *j* by ball bearings *f* in a ball-race in base *g* of the supporting casting. This casting rests on blocks *h* on main girders (or truss) *i* bridging the tank. Worm *j* rotates gear *j* (submerged in oil) in the direction shown in the arrow in Fig. 15, item *A*. When an excessive load comes on the rakes, rollers *b* roll along incline *c* and lift the entire rake mechanism. Link mechanism *l* operates a signal and/or automatic cutout on the driving motor when the rise reaches 3/4-travel.

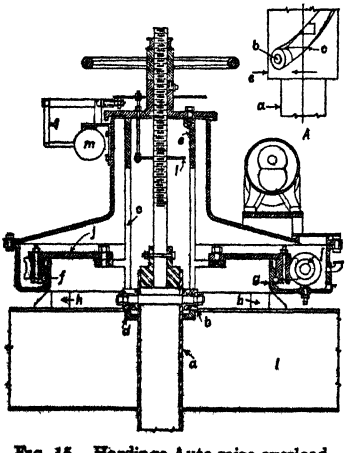

Fig. 15. Hardinge Auto-raise overload relief.

A modification adapted for pier support of the mechanism is used for 100-ft. and larger tanks.

Dorr Torq thickener employs the resistance offered by an overload to cause the rake arms to rise as in Fig. 16 when an overload is encountered. A motor drive unit is mounted directly on top of a steel or concrete center column, a foot or so above the water level. This drives a turntable *a* from which is hung a revolving cage *b*, concentric with the column. Two, or in some cases four, radial arms, right-triangular in cross-section, are secured to the cage with the hypotenuse of the triangle paralleling the cage diagonal corresponding to *d* (assuming clockwise rotation in Fig. 16). Junction is effected by hinges at the upper leading and lower following corners. When resistance of the settled material exceeds the torque of

the arm, the latter turns on the diagonal hinge tilting upward and rearward to ride over the load. Normally the arms slope upward gradually at 1 to 1 3/4 i.p.f., but during overloads, they may take a position many times as steeply inclined, as shown in the figure. This arrangement has been used to drive thickeners up to 250-ft. diameter.

Traction thickener (Fig. 17) is used for tanks upward of 200-ft. diameter. Driving force is applied at the outer end of the main rake arm *a* by a motor-driven carriage running on a rail mounted on the rim of the tank wall. The rake truss is suspended at its inner end from a turntable mounted on a central pier. Additional center raking is provided, if desired, by one or two stub arms *b* actuated by *a*. Stationary truss *c* carries the feed launder to a central feed well and provides a walkway.

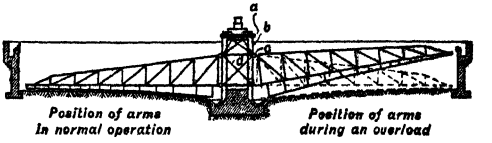

FIG. 16. Dorr Torq thickener.

Feed to thickeners is invariably at the center, through a simple feed well comprising an open-end cylinder (*n*, Fig. 13) in small center-drive machines, and through more elaborate adaptations of the same principle to accommodate center piers and drive cages in the large machines. In all feed devices the basic principle is reduction of velocity of the feed stream to such an extent that it will produce a minimum of local eddies and no main currents in the tank. This is accomplished in feed wells by bringing the feed stream against an imperforate splash board to dissipate most of the velocity and then flowing it through a perforated plate at or slightly below the water surface to distribute it in a number of small low-velocity streams within the well. The wall of the well is carried far enough below the surface, normally a few inches to a foot, to minimize radial surface currents and to insure that solid matter starts off with downward velocity.

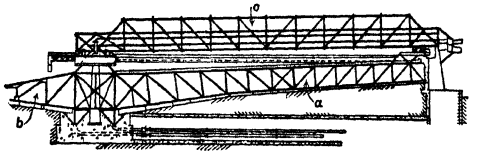

FIG. 17. Dorr traction thickener.

Sizes of single-compartment thickeners are designated normally by tank diameter; they range from 6- to 325-ft.

Tray thickener consists of two or more (usually 6 max.) thickening mechanisms in a single tank subdivided into shallow compartments by transverse obtusely conical septa or trays. In the Dorr balanced type (Fig. 18) the feed stream is divided by V-notch weirs in feed box *a* into equal streams which flow in parallel, as indicated, to centrally located feed points in the (three) different compartments. Sedimentation in each compartment is as in a single-compartment thickener. Overflow is by the usual peripheral weir in the top compartment; in the lower compartments it is drawn off by one or more pipes *b* from each compartment, the quantity drawn being controlled by adjustable slide-pipe weirs in the overflow boxes *c*. Settled material on the trays is raked to the center wells attached to the trays; these make a loose fit with upcast walls *e* carried on the raking mechanism and thus, in conjunction with the beds of thickened material on the lower trays and tank bottom, constitute a sealed central conduit through which thickened solid is led to the bottom-discharge cone, whence it is discharged by a diaphragm pump. In the Hardinge parallel-tray type the compartments are completely sealed off from each other and have, therefore, individual feed and discharge lines; the latter may be joined outside the tank, if desired.

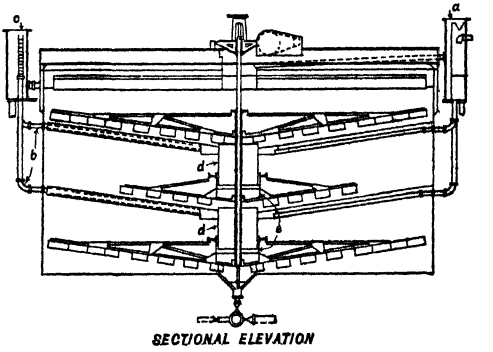

FIG. 18. Tray thickener (Dorr-type).

Sizes of tray thickeners range from 10- to 80-ft. diameter, with 2 to 6 compartments. Minimum tank depth required to accommodate mechanisms ranges from about 9 to 22 ft. for a 2-compartment thickener according to type and diameter, with from 4 to 11 ft. further depth required for each additional tray. Sedimentation requirements (Art. 6) may dictate greater depths.

Manufacturers. Denver Equipment Co., Dorr Co., Eastern Iron & Metal Co., Hardinge Co., Western Machinery Co.

Performances of mechanical sedimentation thickeners are shown in Table 8.

Table 8. Performance of settling-type mechanical thickeners

Plant	Size, diam. × depth, ft.	Feed			Solids, %	T.p.d.	Underflow, % solids *a*	Area, sq. ft. per ton of solids per 24 hr. *b*	Speed, peripheral, f.p.m.	Power consumed, hp.
		Material	Size							
			Limiting mesh	<200-m., %						
Counter-current washing *h*	6× 5	Pigment	325	.....	7.5	3	33	8	.....	.....
Paymaster	11× 6	FC, CO	150	.....	8	8–15	40	6–12	6.3	1
Idaho Maryland	12×10	FC	.....	92	8	10	15	11.3	15.1	.....
Counter-current washing *h*	16× 8	Iron oxide	325	.....	10	18	33	11	.....	.....
N. J. Zinc Co., Ogdensburg	17×12	C, CO	200	.....	0.5	7	7.6	32.5	19	0.5
Cia. Penoles, Avalos	18× 8	FC, Pb	.....	34	15	60	75	4.2	12.5	1.5
Cia. Penoles, Avalos	18× 8	FC, Zn	.....	50	15	90	70	2.8	14	1.5
Climax	20× 6	FC, Mo	.....	90	40	30	50	6.3	14.3	.....
Mt. Lyell	20×10	FC, Cu	48	86	39	150	72 *e*	2.1 *d*	40	1.9
Heavy sulphide ore *h*	20× 8	FF	200	.....	20	100	40	3.1	.....	.....
Gold ore *h*	20× 8	*f*	48	.....	25	60	58	5	.....	.....
Climax	24× 6	FC	.....	90	40	40	50	11.3	.....	.....
Gold ore *h*	24× 8	CCD	48	.....	25	60	58	5	.....	.....
Gold ore *h*	25×10	Lime sludge	200	.....	10	50	38	8 *g*	.....	.....
Gold ore *h*	25×10	CCD	.....	.....	25	58	62	6	.....	.....
Elko Prince	26×16	Cy	.....	.....	12	.....	40–45	19.3	15.4	.....
Nevada Packard	28×10	Cy	.....	72	20	.....	50	4.9	12.6	.....
Aldermac	30×10	FC, Cu	65	75	42	80	59	8.8 *j*	8.3	4
Amer. Metal Co. of Texas	30×10	Cy	.....	.....	25	200	45	3.5	15.6	.....
Canyon Corp.	30× 8	*i*	.....	70	15	105	55	6.7	15.6	.....
Matahambre	30×10	FC, Cu	48	58	58	100	70 *c*	7.0	11.8	.....
Paymaster	30×10	CO, Cy	.....	94	20	275	50	5.1	15.5	.....
El Potosi	30× 8	CO, FC, Pb	.....	.....	40	240	80	3.2	13.5	.....
San Francisco of Mexico	30×10	FC	.....	.....	11.5	90	74	7.9	13.5	1.3
Int. Sm. & Ref., Tooele	30×10	FC, Pb	.....	90	20	150	50 *e*	4.7	31.4	.....
Gold ore *h*	30×10	CCD	65	.....	20	110	56	6.3	.....	.....
Gold ore *h*	30×16 T	Cy	.....	96	20	300	48	4.8	.....	.....
Pittsburg Dolores	30× 5	Cy	.....	80	40	.....	50	11.8	.....	.....
Real Del Monte	30×10	Cy	.....	75	7	.....	42	4.7	13.5	.....
Gunnar Gold	32×12	Cy	.....	80	12	175	50	4.6	18.0	.....
Pamour Porcupine	32×..	FC, *k*	.....	.....	10	90	60	9.0	10.0	1.0
Liberty Bell	33×10	Cy	.....	64	9	.....	67	15.5	13.0	.....
Climax	35×..	FC, Mo	.....	90	25	100	35	9.6	12.0	.....
Shenandoah Dives	35×10	FC, *l*	48	55	30	40	60 *c*	24.0	18.4	.....
Shenandoah Dives	35×10	FC, Pb-Cu	.....	97	30	20	60 *c*	48.0	18.4	.....
Tennessee Copper	38×17	FC, Cu	100	.....	15	80	75	14.2	30.0	2.0
Bunker Hill & Sullivan	40×12	PS	325	.....	.....	40	31	31.5	13.6	.....
Cons. M. & S.	40× 8	FC, Pb	.....	99	38	750	79	2.5	78.5	2
Dome	40×14 T	Cy	.....	86	17	550	62	4.6	21.0	1
Mammoth-St. Anthony	40×10	CO	35	.....	15	170	50	7.4	19.4	.....
Nev. Cons., Ray	40×10	FC, Cu	.....	.....	15	400	35 *c*	3.2 *m*	12.5	3
St. Jos. Lead Co., La Motte	40× 6	FC, Pb	.....	.....	40	20	70 *c*	63.0	10.6	.....
Tennessee Copper	40×17	FC, Py	100	.....	35	430	80	2.9	42.0	1.5
Int. Sm. & Ref., Tooele	40×10	FC, Zn	.....	90	20	250	50 *e*	5.0	40.0	.....
Int. Sm. & Ref. *h*	40×10	FT	.....	65	20	200	55	6.0	.....	.....

United Eastern	40×12	Cy	.....	82	20	.....	50	4.4	12.5	.....
Britannia M. & S.	44×14	FC, Cu	.....	.....	5	50	60	30.0	28.0	4
El Potosi	45× 6	CO, FC, Zn	.....	.....	40	500	80	4.0	28.2	.....
Weepah	45×12	Cy	65	.....	25	400	60	4.0	19.0	.....
Magma Copper Co.	46×11	FC, Cu	48	.....	10–15	75–150 *o*	65	11–22	14.5	.....
Nevada Cons., Chino	48×20	FC, Cu	.....	95	50	500	62 *c*	3.6	24.0	3
Cons. M & S.	50× 8	FC, Zn	.....	95	35	650	66	3.0	78.5	2
McIntyre Porcupine	50×14 T	FC, *p*	2% >325	.....	8–10	300	45 *q*	13.3	31.4	.....
U. S. S. & R. Co., Midvale	50×10	FC, Pb	.....	80	25	200	70	9.8	25.2	2.5
U. S. S. & R. Co., Midvale	50×10	FC, Zn	.....	75	25	200	65	9.8	31.4	2.5
U. S. S. & R. Co., Midvale	50×10	FC, Py	.....	70	20	200	65	9.8	19.7	2.5
St. Jos. Lead, La Motte	50× 6	CO	35	50	5	600	38	3.3	19.6	.....
St. Jos. Lead, Bonne Terre	50× 6	CO	48	60	6	200	32 *c*	9.8	37.4	1.5
St. Jos. Lead, Bonne Terre	50× 6	FC, Pb	.....	95	10	40	70 *c*	49.0	15.7	2
St. Jos. Lead, Federal	50× 6	FC, Pb	.....	88	10	250	65	7.8	7.8	.....
Idaho Maryland	55×12	CO	.....	95	5	200	15	11.8	23.0	.....
New Cornelia	60× 8	FC, Cu	65	81	25	300	40 *c*	9.4	16.4	1.7
Cons. M. & S.	60× 9	*r*	.....	88	26	3,500	60	0.8	23.5	2
Mammoth-St. Anthony	60× 9	CO	35	.....	15	380	50	7.2	24.4	.....
Miami Copper Co.	60×12	FC, Cu	.....	91	14	200	40	14.1	54.0	1.5
Utah Copper, Arthur	65×..	FC, Cu	65	78	15	935	57 *c*	3.6	22.5	4
Nev. Cons., Chino	75×20	CO	325	.....	.....	50	50 *c*	88.3	21.5	2
Nev. Cons., McGill	75×17	FC, Cu	48	52	14	700	65 *e*	6.3	14.2	3
Nev. Cons., Ray	75×12	FC, Cu	.....	.....	5	400	70 *c*	11.0	23.5	3
St. Jos. Lead Co., Leadwood	75×..	CO	48	56	5	825	32 *c*	5.4	31.4	3.5
Utah Copper, Arthur	75×12	CO	.....	63	20	1,500	33 *c*	2.9	26.0	4
N. J. Zinc, Franklin	90×16	PS	325	.....	1.5	152	22 *c*	42.0	15.7	.....
Roan Antelope	90×..	FM, Cu	.....	50	10	700	45 *c*	9.1 *j*	24.5	.....
Andes Copper Co.	100×14	FC, Cu	48	61	10	400	72–79 *c*	19.6	26.2	.....
Int. Sm. & Ref., Tooele	100×13	Tailing	.....	65	18	775	45 *e*	10.0	37.5	.....
Int. Sm. & Ref., Tooele	110×14	*s*	.....	98	0.5	50	41	240	.....	.....
St. Jos. Lead Co., Federal	150× 8	CO	35	49	10	3,500	45	5.0	27.6	7
Miami	180×17	Tailing	35	51	28	5,100	51 *c*	5.0	21.8	2.5
New Cornelia	200×17	Tailing	35	50	20	4,000	45 *c*	7.8	17.5	6.4
Utah Copper, Magna	225×16	CO	35	.....	15	15,100	28 *c*	2.6	54–28	6
Roan Antelope	250×..	Tailing	.....	55	14	10,000	50 *e*	4.9	25.0	4
Utah Copper, Magna	250×17	CO	35	.....	15	18,670	28 *c*	2.6	61–31	6
New Cornelia	275×22	Tailing	35	50	20	7,000	45 *c*	8.5	27.0	6.4
Utah Copper, Arthur	280×18	CO	.....	63	20	22,400	33 *c*	2.7	55.0	6
Miami Copper Co.	325×..	Tailing	35	51	30	18,000	47 *c*	4.6	25.5	5

a Controlled by pump except as otherwise noted.
b Overflow clear except as otherwise noted.
c Underflow spigot-controlled.
d Overflow contains 4% solids.
e Gate-valve control.
f Primary thickener in C.C.D.
g Liquor 14° Bé.
h Data from Hardinge Co.
i Roasted ore.
j 0.5% solids in overflow.
k Reground.
l Rougher.
m 5% solids in overflow.
o Overflow slightly cloudy at 150 t.p.d.
p Pyritic, in cyanide solution.
q Clear solution taken only from bottom compartment; most of solid taken from top compartment.
r Lead-rougher tailing.
s Blast-furnace-gas washer water.

C Concentrate.
CCD Counter-current decantation.
CO Classifier overthrow.
Cy Cyanide pulp.
FC Flotation concentrate.
FF Flotation feed.
FM Flotation middling.
FT Flotation tailing.
PS Primary slime.
Py Pyrite.
T Tray-type.

Operation of Settling-Type Mechanical Thickeners

Control of thickened product is usually effected, in the case of thickeners of 50-ft. diameter and smaller, by adjustable-displacement diaphragm pumps (Sec. 18, Art. 19). Spigot discharge tends to be irregular both in density and quantity, and spigots are also prone to clogging. Nevertheless, where close control of solid content or tonnage is not a factor, as in operating tailing thickeners, spigot discharge is usual (see Table 8).

Density of thickened pulp is affected by the size, specific gravity, mineralogical character, and state of dispersion of the ore; the detention provided, the depth of tank, and the action of the raking mechanism. In general, the discharge from a continuous thickener will be as dense as or denser than the long-time settlings from the same pulp in a beaker, graduate, or similar apparatus.

Ore. Coarse feeds of heavy ore settle to higher densities than feeds of fine, light material. Siliceous ores settle to higher densities than clayey and highly oxidized ores. Percentage of solids in thickener discharges can be run up to between 45 and 60% on normal feeds of 2.7 sp. gr. ground to 100- to 200-m. On clean, siliceous ores of higher sp. gr. ground to 48- or 65-m. the discharge may run as high as 65 to 70% solids.

Detention. Within limits, the density of the discharge is a function of the time (DETENTION PERIOD) during which the feed particles are retained in the thickener tank. A definite detention, differing for different ores, is required for a pulp of a given dilution to settle to the ultimate density. If the rate of sludge withdrawal is such that this time relation has not been allowed, the pulp discharges at less than the attainable density. With a given daily volume of feed, detention is a simple function of area and effective depth of consolidating pulp. (See Art. 6.)

Depth of tank. The effect of depth on density of underflow is small. The time during which consolidated pulp is compacting is the important element in determining discharge density. Shallow tanks ordinarily show slightly thicker discharges for a given time of settling, on account of the fact that compacting starts earlier therein. Table 9 is typical.

Table 9. Effect of depth on density of underflow (*After Coe and Clevenger, 55 A 356*)

Time of settling, hours	Depth of tank					
	114 in.		45 in.		11 in.	
	Depth of clear liquor, inches	Solids in settled pulp, %	Depth of clear liquor, inches	Solids in settled pulp, %	Depth of clear liquor, inches	Solids in settled pulp, %
0	.....	22.5	.....	22.5	.....	22.5
1	1.5	.....	1.5	.....	1.56	26.7
5	9.4	25.3	9.75	28.8	3.92	33.6
23	45.5	35.5	19.5	37.1	5.25	39.5
29	51.5	38.2	21.0	39.1	5.39	40.1

Effective depth is total depth minus the depth of clear liquid extending from the surface to the lower rim of the feed well and minus the depth at the bottom of the tank occupied by the raking mechanism. The clear solution zone at the top may be a foot or two deep, while the raking zone at the bottom is equal to the radius of the tank in feet multiplied by $s/12$ where s is the slope of the rake arms in inches per foot. This effective depth, as determined by test (Art. 6), must be allowed for each compartment in tray thickeners; the total depth of the tank is the combined depth of the various compartments.

Raking mechanism. Many tests have demonstrated that the raking mechanism increases the ultimate density. All but the coarsest pulps settle to a higher ultimate density in continuous thickeners than in quiescent tubes or vessels. This is because, in quiescent settling, the individuals pack loosely in coming to rest, forming a structure, however, strong enough to resist the gently applied load of later-settled particles. The rakes exert greater pressure, in general, than gravity, and rabble the particles somewhat, thus compacting them. The rake arms of the type G Dorr thickener are provided with vertical fingers, resembling a picket fence, to accentuate this compacting effect. The action is paralleled by stirring settled sludge in a beaker, particularly if it is flocculent.

Distribution of solids in operating thickeners is shown in Figs. 19 to 21. In Fig. 19 the deep layer of clear solution at the top leaves a safe working margin for feed fluctuation and is a desirable condition. It also provides space that may, in emergency, be utilized for pulp storage. In Fig. 20, the thickener is being loaded heavily; if the feed rate were further increased, or settling rate should decrease, the clear zone would disappear and a cloudy overflow result. Fig. 21 shows the characteristic lateral size distribution during settling, with coarse heavy solids near the center and fine solids well out toward the periphery of the tank. The rakes, in plowing settled material to a central outlet, restore size distribution to that of the original feed pulp.

Capacity is normally expressed as sq. ft. per 24-hr. ton of settled solid. It depends upon the settling characteristics of the solid, *i.e.*, mineralogical character, size, and state of dispersion, and upon the moisture content of the feed and the density of underflow. (See ***Density***, p. 22.) Moisture content of pulp together with volume and tank area determine

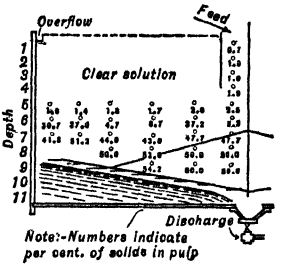

FIG. 19. Pulp densities in a thickener; low feed rate (*after Dorfman*).

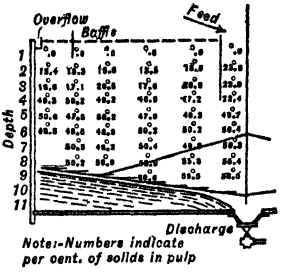

FIG. 20. Pulp densities in an overfed thickener (*after Dorfman*).

the rising current against which the solid must settle. Rising velocity in dilute pulps may be as great as 0.5 mm. per sec. Table 10 summarizes Table 8 and gives additionally rough average data from Dorr Co. files. The data are to be used with caution, and then only for check purposes; actual tests (Art. 6) should always precede specification. The soluble-salt content of ores and mill waters, and the reagents added for flotation, cyanidation, and the like, may have a tremendous effect on settling rates and, consequently, on thickener capacity.

At TUL MI CHUNG (*114 P 362*) addition of 2 lb caustic soda per ton of a calcitic ore decreased thickener capacity on a pulp containing 25% solids from 6 sq. ft. per 24-hr. ton to 36 sq. ft., or 500%.

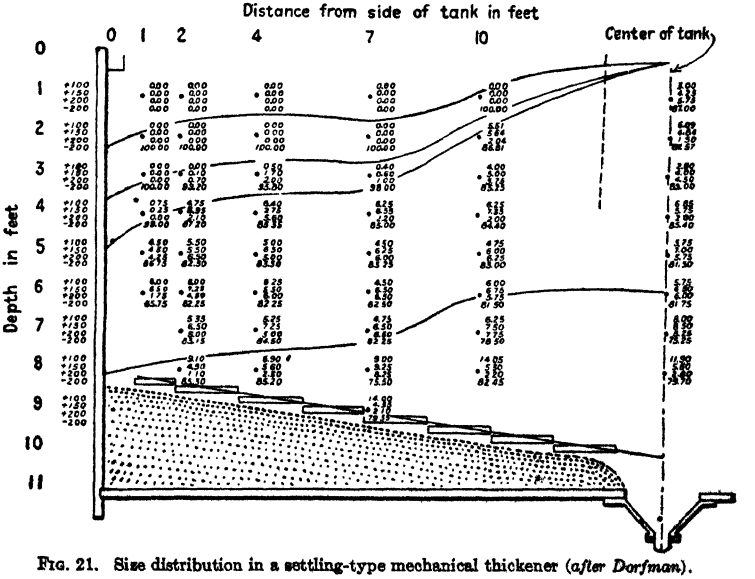

FIG. 21. Size distribution in a settling-type mechanical thickener (*after Dorfman*).

Concentrate thickening is ordinarily complicated by the presence of fine armored bubbles and fine-bubble agglomerates, and by the tendency of the pulp to refroth when or if it plunges into the body of pulp in the thickener. The best cure for frothing in the tank is prevention, *i.e.*, to introduce pulp at low velocity and at an acute angle to the surface. Frothing agents containing little or no insoluble oils normally make fragile froths.

Froth breaking. Surface froths can be broken by water. It is necessary to strike practically every bubble that is to be broken, hence the water must be projected at the froth as a multitude of small masses (SPRAY) or as a number of small streams (MULTIPLE JET) or as a sheet. The water must be under some pressure in order to be moving with sufficient velocity to break the bubbles, but the velocity should not be so high as to produce froth by cascade action (see Sec. 12, Art. 22). The sprays or water jets are applied in the launders leaving the flotation machines or are directed at the stream as it enters the thickener.

Pumps and bucket elevators have been used to break froth at several plants but neither is particularly satisfactory. If the froth is persistent and voluminous it will not enter these machines, but overflows the sumps, and water must be used to break it down. The cascade action at the discharge will cause considerable froth to form.

Table 10. Thickener areas required for settling typical pulps *a*

Type of pulp	Composition of feed pulp	Source of figure	Usual solid content of feed, %	Usual solid content of underflow, %	Unit area, sq. ft. per ton per 24 hr.
Cyanide-process slimes	<200-m., siliceous, 0.1% NaCN.	*a*	16 to 33	40 to 60	3 to 15
		b	10 to 25	40 to 60	2 to 20
Flotation feed	Usually alkaline and flocculent.	*b*	15 to 20	30 to 50	3 to 10
Flotation concentrate	Usually alkaline, flocculent, and finely aerated.	*a*	20 to 25	60 to 75	7 to 18
Lead		*b*	10 to 40	50 to 80	3 to 10 *c*
Zinc		*b*	15 to 40	50 to 80	3 to 10
Copper		*b*	10 to 50	40 to 80	2 to 15 *d*
Iron		*b*	8 to 20	15 to 65	3 to 13
Molybdenum		*b*	25 to 40	35 to 50	6 to 11
Flotation tailing	As flotation feed.	*b*	15 to 30	45 to 55	5 to 10
Primary slimes	Clayey, usually high soluble salt.	*b*	0.5 to 6	15 to 40	32 to 42 *e*
Lime-soda mud	Precipitated $CaCO_3$ in 10 to 12% NaOH solution.	*a*	9 to 11	30 to 50	5 to 30
Water-floated whiting	<300-m. $CaCO_3$ in water.	*a*	4 to 5	30 to 50	45 to 75
Water-floated clay	<300- or 325-m. clay in water.	*a*	1.5 to 3	20 to 40	10 to 225
Bauxite residues	Fine silica in 30° Bé aqueous $Al_2(SO_4)_3$ solution.	*a*	5 to 10	10 to 20	75 to 150

a The figures foot-noted *a* are by Dorr Co. and are given as normal ranges for illustrative purposes only; specific pulps should be tested (Art. 6) before a machine is selected.

b From Table 8.

c Some underloaded thickeners up to 63 sq. ft.

d One at 30 sq. ft., probably underloaded.

e One value at 88 sq. ft.

At CIA. COROCORO DE BOLIVIA (*112 J 983*) a very tough froth was broken by running it into the intake of a 4-ft.×6-in. ventilating fan running at 250 r.p.m. The fan handled more than 50 tons of froth per 24 hr. Blades lasted 4 to 6 mo. Only the foam was sent to the fan.

Soluble reagents that lower surface tension greatly in relatively low concentrations, such as pine oil, wood creosotes, and the like, have been mixed with the spray water at some plants. Water containing such reagents lowers the surface tension of the bubble films that it strikes to such an extent and so suddenly that the adjacent film contracts sufficiently to break the bubble wall at the point of low tension. The use of Wilfley tables as froth breakers is an application of the method of surface-tension change. Lime has been added at COEUR D'ALENE plants to break down froth (*105 J 716*), but the probability is rather that it promotes settling, since it has not sufficient effect on surface tension to act from that angle.

Frequently small-bubble persistent froth collects on the surface of concentrate thickeners and, if not confined, overflows. If it can be confined by a ring placed a few feet in from the overflow rim and extending down for several feet into the tank and up a foot or more above the overflow rim, it gradually dries out and compacts, and equilibrium is reached with settlement of the densest portion from the bottom near the periphery, balancing accession at the center. At MIAMI, when oil was used as a collector, this end was attained by using several tanks more or less intermittently and thus allowing sufficient time in each for the necessary compacting. At GOLD HUNTER (*107 J 839*) floating froth was scraped off into a special launder by arms connected to the revolving mechanism, and joined with the thickened product ahead of the filter plant.

Trouble with surface frothing has substantially disappeared from mills treating metalliferous ores, but is present in most nonmetallic flotation mills, if flotation feed is not deslimed.

Submerged air-mineral aggregates decrease sedimentation rates but do not affect moisture content of underflow materially. No general method of breaking such air-mineral contacts is known, although it is not impossible that with fatty-acid collectors a high hydroxyl concentration would be effective (see *153 A 500*).

Power consumption is so small as to be negligible from a cost standpoint. Installed horsepower is several times that consumed in normal operation in order to supply reserve force to overcome incipient stalls, and for starting without excessive lifting of rakes.

Attendance is a small item; attention is generally confined to pump adjustment, involving starting and stopping not over once or twice per shift, and to lubrication, which requires about 10 min. per day per thickener. Thus, except where a large number of tanks is in use, operators on adjacent machines can take care of them.

At MORENCI (old) one laborer devoted 3 hr. per 24 hr. to the operation of one 200-ft. thickener, handling 2,000 tons of tailing per day. At INSPIRATION one man per shift operated eight 60-ft., three 80-ft., and one 200-ft. thickeners. At ANACONDA one man, full time, took care of 40 @ 28-ft. tanks. At CHINO one man attended 21 tanks of 20- to 75-ft. diameter.

Repairs are substantially nil, barring accidents due to attempts to start after a shutdown when the rakes are imbedded in solid. Such accidents may be avoided by raising the rakes before shutting down and lowering them slowly on starting. Wooden tanks rot in course of time and should not be used if long life is desired, except where metal cannot be

Table 11. Operating costs of Dorr thickeners

Plant	Tons per day	Thickeners		Cost, ¢ per ton
		Number	Size, diam. × length, ft.	
Miami Copper Co.....	17,200	2	325×..	0.065
Utah Copper Co.....	13,200	1	225×..	0.069
Sumitomo Konomai....	120	3	30×10	0.34
Hollinger Consolidated..	1,000	12	40×14 *a*	0.29
Homestake.....	1,700	26	26×20 *b*	0.60
Dos Estrellas.....	700	5	36×20 *c*	0.25
American Metal Co....	425	3	40×10	0.25
Britannia M. & S.....	6,700	3	50×14	0.94
Magma Copper Co.....	650	1	45×10	0.52

a 1-tray. *b* 3-tray. *c* 2-tray.

used on account of the chemical character of the liquid and where concrete is not justified. Maintenance for a 2 1/2-yr. period at INSPIRATION was $208.56 total.

Costs. Operating costs at a number of plants are given in Table 11. Safe average figures for estimating are: 1¢ per ton of solid per thickening step for 100 to 300 t.p.d. per thickener; 1 1/2 to 2¢ for smaller operations, and 1/2 to 3/4¢ for large. INSTALLATION COSTS average about $70 per ton of mechanism, $30 per ton of superstructure and steel tank, and $80 per ton of wood tank. Concrete work for foundations and tanks: Excavation, $1 per cyd.; concrete in place, $30 per cyd.; supports in place: wood, $100 per M.B.M.; steel, $150 per ton.

6. DESIGN OF SETTLING TANKS

Coe and Clevenger method (*55 A 356*) is based on settling tests such as those described in Art. 1, carried out in detail as follows:

Apparatus: Glass cylinders 2 in. or more in diameter and 12 to 18 in. deep, preferably graduated; 2-liter graduates are excellent.

Testing: Two series of tests should be made, the first to determine the area required to obtain clear overflow, the second to determine the tank volume necessary to obtain a spigot discharge of the required density. In both series all conditions must be the same as will be encountered in practice, *e.g.*, the time that the ore has been in contact with water or solution; the kind and quantity of electrolyte or other reagent present, if any; the method of grinding and the temperature must be watched particularly.

Tests for area require from six to a dozen samples of pulp of varying consistency ranging from that of the original feed pulp to that of the thickest free-settling pulp (normally between 20 and 30% solids). The samples are best taken from a large batch which has been thickened to the desired consistency by decantation, then thoroughly stirred and sampled. Each sample, diluted to the desired consistency with decanted liquor, is allowed to stand until the upper surface of the solids has settled

about 1/8 in., then a reading is taken and the rate of subsidence for a period ranging from 2 or 3 min. for thin pulps to from 6 to 10 min. for thick pulps determined. With thick pulps intermediate readings should be taken to insure that the rate of subsidence is uniform. A decrease in rate indicates departure from free-settling conditions. The observed rates should be converted into feet per hour and tabulated as shown in the first three columns of Table 12.

Table 12. Results of tests to determine area of settling tank *a* (*After Coe and Clevenger*)

Test No.	*F*	*R*	*A*
1	6.00	2.180	3.00
2	4.94	1.190	4.29
3	4.00	0.893	4.31
4	3.51	0.758	4.22
5	3.00	0.600	4.05

a See *Design calculation* below.

Spigot-density test is made on the thickest free-settling pulp by reading the level of the surface of the subsiding pulp in the same cylinder as above used at intervals of several hours until subsidence ceases or until the required pulp consistency is reached. The overlying clear liquor should be removed often enough to keep the water surface near that of the subsiding solid. Table 13 shows the results of such a test on the same pulp as was used for Table 12.

Table 13. Results of spigot-density test *a* (*After Coe and Clevenger*)

Time of settling, hours	*D*
2	1.70
4	1.59
9	1.35
14	1.20
19	1.12

a See *Design calculation* below.

Design calculation

A Area in sq. ft. required per ton of dry solids fed per 24 hr. (24-HR. TON) to produce clear overflow, assuming free settling.

c Subscript indicating compression zone.

D Water-solid ratio by weight (DILUTION) of tank underflow; it is determined by spigot-density test, and may correspond to the ultimate density, or to some lower density dictated by other considerations.

D' Average dilution of pulp in compression zone, undergoing consolidation settling (p. 15–09).

d Required depth of compression zone, ft.

F Dilution of feed to a particular zone, the identity of which is denoted by a subscript.

f Subscript indicating free-settling (upper) zone.

R Rate of subsidence, ft. per hr., of top of solids in a pulp of dilution F_f.

T Weight of liquid, in tons, rising through any zone per 24 hr. per 24-hr. ton of settling through the same zone.

t Hours required for pulp to consolidate from F_c to *D*.

δ Average sp. gr. of solids in compression zone.

ρ Sp. gr. of liquor in which settling takes place.

ρ' Average sp. gr. of pulp in compression zone.

Area. Design, founded on the tests, is based on the assumption that the rising velocity of the water through each subsidence zone in the tank is equal to the settling velocity of the solid in still water through the same zone. Then $T = 24\,AR\rho\,(62.5)/2{,}000$. But $T = F - D$, by definition. Substituting this value for T in the preceding equation, and solving for A gives $A = 1.33\,(F_f - D)/R\rho$. Applying this equation to each settling test, *e.g.*, as in Table 12, values of A may be calculated for any selected value of D. The value $D = 1.12$ (see Table 13) was taken in deriving the values for Table 12.

Note that if the value of A in the tabulation (as Table 12) increases sharply in a zone of relatively low dilution, it is indicated that the pulp is undergoing consolidation settling. Consequently the equation for A does not apply.

From Table 12 it appears that, for the pulp tested, the maximum area required to be provided per 24-hr. ton is 4.31 sq. ft., corresponding to the zone in which $F = 4.00$. If less area is provided, the layer of pulp of this density will increase in thickness and solid matter will eventually overflow.

Capacity in the compression zone depends directly on the time required for the sludge to reach discharge density D, the time being a function of volume, which, for a tank of given area, is directly proportional to depth.

To calculate capacity in compression, the time required for a pulp, after it has entered the compression zone, to reach the discharge dilution required is taken from the spigot-density test records. Maximum economic density is usually limited by the pumping characteristics of the pulp, but cost of initial installation, limited space available, etc., may make it necessary or desirable to accept a more dilute discharge; character of the pulp determines ultimate density (see Art. 1).

From the spigot-density test, D' and ρ' are determined. Then the weight of solids in pounds in one cubic foot of pulp in the compression zone (average) is $62.5\rho'(D' + 1)$, whence the volume of pulp in this zone which contains one ton of solids is $2{,}000\,(D' + 1)/62.5\rho'$. The volume required to contain a 24-hr. ton of solids is $^1/_{24}$ of this or $4(D' + 1)/3\rho'$, and the volume required per 24-hr. ton to store for t hours is $V = 4t(D' + 1)/3\rho'$. But

(Sec. 19, Art. 24) $D' = \rho(\delta - \rho')/\delta(\rho' - \rho)$, and $D' + 1 = \rho'(\delta - \rho)/\delta(\rho' - \rho)$, whence $V = 4t(\delta - \rho)/3\delta(\rho' - \rho)$. But $d = V/A$, whence

$$d = \frac{4t(\delta - \rho)}{3A\delta(\rho' - \rho)}$$

From table 13, D' was 1.41 ($= {}^1/_2[1.70 + 1.12]$). Assuming $\delta = 2.7$, $\rho' = 1.33$, whence $d = [4 \times 19(2.7 - 1)]/[3 \times 4.31 \times 2.7(1.33 - 1)] = 11.2$ ft. Add to this figure 1 to 2 ft. of clear solution for a margin of operating safety, and an additional allowance for the pitch of the rakes (p. 15). The total is the depth required with no allowance for storage, or variation in tonnage, character of ore or solution, temperature, etc. If the tank thus calculated is too deep, the necessary volume may be obtained by increasing diameter. Coe and Clevenger recommend a minimum area of 6 sq. ft. per 24-hr. ton for pulps composed of fine granular material with a considerable proportion of dispersed slime.

Table 14 compares capacities computed by the tests outlined with actual capacities at a number of plants. The great discrepancies at PORTLAND and PRESIDIO correspond to underloaded tanks, as shown by the excessive depths of clear solution. The NIPISSING excess of actual over calculated capacity appears to correspond to overloading. All of the pulps in Table 14 are cyanide pulps containing lime, which is an aid to settlement.

Table 14. Comparison of computed and actual capacities of thickeners (*After Coe and Clevenger*)

Pulp from	Computed capacity, pounds per square foot per hour	Actual capacity, pounds per square foot per hour	Depth of clear solution in tank, feet	Ratio of water to solids in	
				Feed pulp	Discharge pulp
Liberty Bell	4.9	5.9	1.25	10	2.00
Belmont	14.1	14.8	1.5	7	2.11
Portland	8.3	6.0	6.0	15.1	1.66
Nipissing	8.2	11.8	.....	11	1.50
Presidio	33.0	17.6	6.0	5.6	1.58
Hollinger	19.7	18.0	2.0	5.6	1.00
West End	15.2	12.0	5–6	6.1	2.02
Homestake	7.8	7.0	.....	33	2.18
Homestake	8.9	8.6	.....	17.5	1.50
Golden Cycle *a*	19.3	19.1	0	7.7	1.00

a Roasted ore.

7. WASHING IN THICKENERS

Counter-current decantation (C.C.D.) is the field name applied to continuous application of the familiar laboratory procedure of washing a fine solid by decantation. It is a common practice in hydrometallurgical operations. Fig. 22 is a typical installation in which items 1, 2, and 3 are agitators arranged for series flow, and *X*, *Y*, and *Z* are thickeners arranged for series flow of solid in the order named, with counterflow of removed liquid.

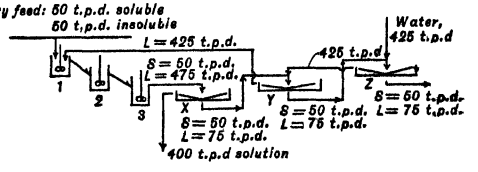

FIG. 22. Washing by countercurrent decantation.

Calculations. In Fig. 22 the feed assumed is 100 t.p.d. of solid, of which 50% is soluble in water; 425 t.p.d. of water is to be used as extractant; the insoluble residue settles under the conditions postulated to a pulp containing 40% solids. *Wanted:* (*a*) the solution concentration in all thickeners; (*b*) the amount of soluble material discharged in the underflow from *Z*; (*c*) the washing efficiency; (*d*) the extraction.

Tonnages. The underflow from the final thickener *Z* consists of 50 t.p.d. of insoluble solid (assuming complete solution in the agitators) comprising 40% of the discharge pulp; the accompanying liquid is, therefore, 75 t.p.d. On the conditions of the problem, the solid and liquid contents of the other thickener underflows are the same.

Total inflow to thickener *Z* is 500 t.p.d. of liquid and 50 t.p.d. of solid, wherefore the overflow to thickener *Y* is 500 − 75 = 425 t.p.d. of liquid. Thickener *Y* receives the same quantity of liquid as *Z* and overflows the same quantity. Thickener *X* receives only from agitator 3, the discharge of which is equal in weight to the feed to agitator 1, or 425 t.p.d. of liquid, 50 t.p.d. of insoluble solid, and 50 t.p.d. of soluble solid, which dissolves in the agitators. Underflow from *X* carries away 125 tons of this total, including all of the solid; hence overflow from *X* is 525 − 125 = 400 t.p.d. of solution.

Solution concentrations are calculated as follows: Let x, y, and z represent respectively the solution concentrations in the similarly lettered thickeners. Equate tons of dissolved salts in and out of each thickener and solve.

Thickener	*In*	*Out*	*Concentrations*
X:	$50 + 425y =$	$400x + 75x$	$x = 12.44\%$
Y:	$75x + 425z =$	$425y + 75y$	$y = 2.14\%$
Z:	$75y =$	$425z + 75z$	$z = 0.32\%$

Extraction is the percentage of the total salt fed that is contained in the overflow of thickener *X*, or $400\ (0.1244)100/50 = 99.5\%$. Given assays of feed and tailing (concentrate assay is 100%), extraction is obtainable by the usual recovery formula (Sec. 19, Art. 22).

Tailing assay (solid basis) is the salt content of the underflow of thickener *Z* divided by the sum solid plus salt in this underflow, or $75(0.0032)\ 100/[50 + 75(0.0032)] = 0.48\%$.

Filtration of tailing. Vacuum filters (Sec. 16, Art. 7) are frequently installed at the end of the C.C.D. system to dewater tailing. If the filters are arranged for spray washing, a smaller number of thickeners is required to give the same over-all washing efficiency.

Washing in tray thickeners. Fig. 23 shows the operation of a tray thickener arranged for washing, typified by series flow of solids and wash liquid in opposite directions through successive compartments, rather than by parallel operation of these compartments as in Fig. 18. The lower four compartments in Fig. 23 represent typical C.C.D. operation; feed enters the first washing compartment through feed box *B*, and solid progresses under gravitational influence through the successively lower compartments: wash water or other extractant enters the bottom compartment through feed box *E* and progresses via overflow pipe *F*, and feed box *D* to the overlying compartment, and thence similarly to a final discharge of enriched overflow from box *A*. The top compartment is superimposed as in Fig. 23, if treatment of the pulp prior to washing, as by agitation, and separation of original solution from wash solution are desired. This top compartment is actually a separate thickener, substantially sealed off from the first washing compartment by what is, in effect, a heavy-liquid seal.

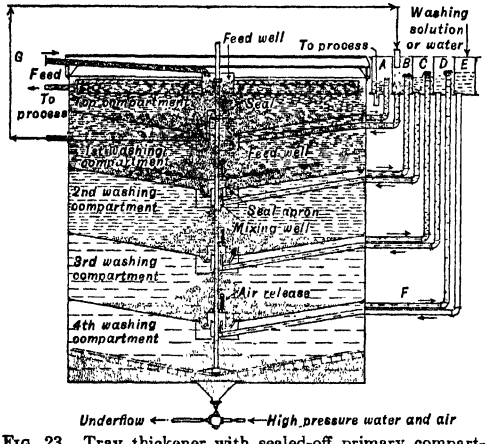

FIG. 23. Tray thickener with sealed-off primary compartment (*Dorr*).

8. FILTER THICKENERS

Filter thickeners depend primarily upon filtration (Sec. 16, Art. 1) to separate liquid from solid; they differ from filters in that the solid deposit on the filtering septum is not normally exposed to air drying but is dropped in the presence of the feed pulp, settling therein rapidly because of aggregation that survives the dropping.

They are particularly useful for thickening, washing, and leaching materials which do not settle readily from a suspending fluid, owing either to low specific-gravity differential between solids and liquid or to fine dispersion of the solid.

The usual filter thickener consists of a relatively deep tank provided with pulp-feed and sludge-discharge connections and a plurality of submerged filter elements connected to a source of vacuum. Filtration and droppage of cake are alternated automatically at short intervals, the wet cake being forced off by a counterflow of low-pressure air or water introduced behind the filter medium. The dropped cake is removed from the bottom of the tank, as a thick sludge, by spigot or pump.

Genter thickener (Fig. 24) consists of a cylindrical tank *a*, with obtusely conical bottom, in which are mounted a series of tube frames *b* radiating from a central structure *c*, the upper part of which is an automatic valve and the lower a filtrate receiver. The tubular elements, of which 4 to 16 depend from a manifold on each frame, are approximately 6 in. in diameter by 6 ft. long, made of corrugated iron or wood covered with filter medium. The filtering area of each tube is about 9 sq. ft. Timing mechanism *d*, which drives the auto-

matic valve, is motor driven; the same motor also drives rakes *e* at about 60 f.p.m. peripheral speed. Discharge of thickened product is effected by an intermittent valve driven from the timing mechanism. An annular overflow launder is provided. Frames are readily disconnected, one at a time, by means of a clamp, and may then be lifted out for inspection and/or repair. The individual filter units, weighing about 15 lb. each, are readily detached separately.

In operation the tank is kept filled to overflow to insure submergence of the filter elements, and the timer is set for a filtration period per frame of 1 to 10 min. (5 min. is usual), with 2 to 3 sec. flush-back period for discharging cake. The spigot-discharge timer is set to maintain the desired underflow consistency.

Sizes are rated on tank diameter and/or filter area as follows:

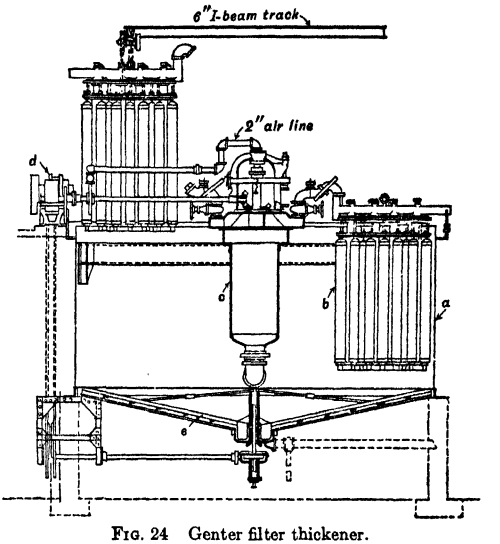

FIG. 24 Genter filter thickener.

Tank diam., ft.....	2 1/6	9	12	12 1/2	13	14 1/3	18 1/2
Filter area, sq. ft.....	50	375	750	940	1,150	1,300	2,300

Manufacturer. General Engineering Co.

Performance data are given in Table 15.

Table 15. Performances of Genter thickeners

Plant	Falconbridge	Cons. M. & S. Co.			U. S. S. R. & M. Co., Midvale		
Size: Sq. ft. filter area....	375	672	1,008	1,254	20	20	20
Tank, diam × depth, ft.	.....	12×10	18×10	18×10	.....	.....	.....
Feed: Material.....	*FC*	*FC*, Pb	Tailing	*FC*, Zn *a*	*FC*, Pb	*FC*, Zn	*FC*, Fe
% <200-m.....	65	95	55	84	.....	.....	.....
% solids.....	40	43	25	7.3	20	19	14
Tons per day.....	75	480	535	120	6.5	3.4	3.0
Underflow: % solids.....	60	50 to 60	50 to 60	50 to 60	65 to 70	65 to 70	65 to 70
Tons solid per 1,000 sq. ft. filter area...	200	715	531	96	327	172	152
Filtrate, g.p.m. per sq. ft. of filter area	0.0278	0.0627	0.16	0.14	0.17	0.10	0.13
Sq. ft tank area per ton of dry feed.....	.....	0.24	0.48	2.12	0.37	0.71	0.80
Power consumed, hp.....	6.5 *b*	.....	.....	.....	.....	.....	.....
Vacuum, in. Hg..	.....	.....	.....	.....	23	23	23

a Leached. *b* Including vacuum pump. *FC* Flotation concentrate.

Oliver-Borden thickener has vertical filter tubes arranged in rows in a rectangular tank, the bottom of which forms a vee under each adjacent pair of rows. Tubes taper slightly downward. Alternate vacuum and blowing collect and drop cake into the vees, where it is re-pulped by a horizontal bladed stirrer and is then discharged by gooseneck.

Sweetland filter-thickener is similar to the Oliver-Borden, differing somewhat in tub construction, and in the fact that alternate vacuum and backwash water are supplied by a rotary pump driven by an automatically reversible motor.

Shriver filter-thickener is a modification of the Shriver plate-and-frame pressure filter (Sec. 16, Art. 6), so arranged that the flow of pulp is continuous from end to end, and the velocity is high enough to prevent cake formation by scouring. As a result the pulp is continuously thickened in its passage by removal of liquid, and there is continuous discharge of thickened pulp and clarified liquid at the end. Operating pressures range from 20 to 50 lb. per sq. in.

Hardinge Super-thickener (Fig. 25) is a combination of the usual settling-type dewaterer with mechanical removal of settled solids, and a sand filter. Its underlying principle is to increase the rate and extent of compacting of settled solid by making the direction of the currents of expelled water downward instead of upward. It does this by maintaining a head of solution on the sand-filter bottom;

either by suitable difference in elevation between the level of overflow and filtrate discharge or, if this is insufficient, by discharging filtrate by means of a vacuum pump. In Fig. 25 (*a*) is the thickener tank with overflow launder (*b*), spigot discharge (*c*) through a diaphragm pump, scraping mechanism (*d*) for moving settled solids toward the discharge spigot, a sand bed (*e*) through which filtrate is to be drawn, supported on the usual framework of studs, slats, cocoa-matting and burlap (*f*) (see Sec. 16). A pipe (*g*), connected to the space under the filter bottom, discharges filtrate either into the atmosphere or into a vacuum tank, according to the filtering duty required. The essential element of successful operation is the continuous removal of a thin skin from the top surface of the filter bed, thus maintaining this at full filtering efficiency. This is done by means of a thread (*h*) on the upper end of the drive shaft and a ratchet-driven feed mechanism (*i*) which lowers the scraping mechanism at the rate of 1/64 in. to as much as 8 in. per 24 hr., depending upon the amount of material present that tends to clog the filter. The thread (*h*) is 5 ft. long. The sand should be fine, granular, and of such a mixture of sizes as will give maximum porosity and yet permit minimum penetration of solid, as in Table 16. Power requirement for the scraper and diaphragm pump is about the same as for the usual rake thickener. If suction is used, more power, in accord with the suction requirement, will be needed.

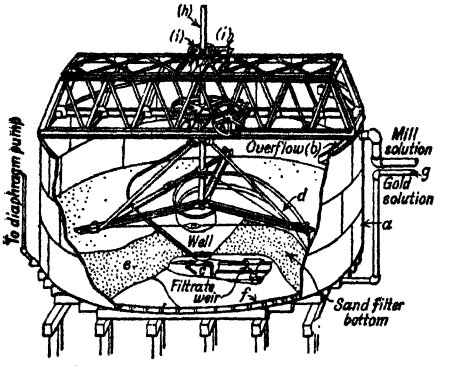

FIG. 25. Hardinge Super-thickener.

Table 16. Screen tests of Super-thickener sand-filter bottom at Golden Cycle

Mesh	April 26, 1923		October 1, 1923		May 23, 1924	
	Actual, per cent.	Cumulative per cent.	Actual, per cent.	Cumulative per cent.	Actual, per cent.	Cumulative per cent.
20	1.7	1.7	18.0	18.0	.....	.....
30	14.1	15.8	22.0	40.0	.....	.....
40	18.9	34.7	14.0	54.0	0.5	0.5
60	31.9	66.6	23.0	77.0	14.9	15.4
100	11.3	77.9	10.0	87.0	18.9	34.3
150	.....	.....	6.0	93.0	35.7	70.0
200	3.5	92.5	3.0	96.0	18.1	88.1
<200	4.0	100.0	4.0	100.0	11.9	100.0

The underflow of the Super-thickener at GOLDEN CYCLE could be maintained at a much higher density than was possible in the usual type. When feeding cyanide pulp containing 20% solids, ground so that 95 to 98% was <200-m., the Super-thickener would discharge at 70% solids, working under a static head of 20 in. of water, but the diaphragm pump could not handle pulp of this thickness, so that density was lowered to 64% solids. This is to be compared with maximum operating thickness of 45% solids on the same pulp in the ordinary machine. (*Hardinge Co.*)

Applicability. The Super-thickener is particularly adapted to clarification and to production of exceptionally thick spigot products. For thickening service that is within the capacity of the ordinary thickener the latter is simpler to operate and probably cheaper, notwithstanding a somewhat lower capacity.

Centrifugal thickeners. The Bird centrifugal (Sec. 8, Art. 13) is used as a thickener in many nonmetallic milling operations.

Comparison of Thickeners

Continuous thickeners have greater capacity per square foot of settling surface than intermittent because the settling rate in the latter is slowed down, when they are nearly full, by the approach of thick pulp to the surface. Convenience in operation is, of course, all in favor of the continuous machines. Gravity-discharge continuous thickeners have the same capacity per square foot of settling area as the mechanically discharged machines, so far as settling alone is concerned, but on account of the difficulties in maintaining uniform discharge of thickened material by gravity, the practical effect is to cut down the capacity. The slow raking of the thick-pulp layer to the discharge opening aids and accelerates final compacting. Filter thickeners are superior to gravity thickeners for clarification, for treating very dilute pulps, and for making very thick spigot products. Centrifugal thickeners are outstanding in capacity per unit of area and of volume occupied. Both the filter thickeners and the centrifugals require more power, attendance, and maintenance than the gravity types.

SECTION 16

FILTRATION

REVISED BY DONALD F. IRVIN, ENGINEER,
OLIVER UNITED FILTERS, INC.

ART.		PAGE
1.	Principles of filtration	01
2.	Filter medium	02
	TYPES OF FILTERS	
3.	Continuous vacuum filters	04
4.	Operation of continuous vacuum filters	14
5.	Sand filters	18
6.	Pressure filters	19
7.	Vacuum-leaf filters	21
8.	Centrifugal filters	22
9.	Comparison of filters	22

Filtration is employed in milling to separate liquid from solid more completely than is possible by settling alone. The principal applications are in dewatering flotation concentrate and, in the cyanide process, in removing pregnant solution from leached solid, washing the dewatered filter cake, clarifying decanted pregnant solution, and in collecting precipitate; other uses are for dewatering magnetic concentrate and various nonmetallic minerals in wet-treatment plants. A FILTER is a permeable septum so mounted that the material to be filtered can be brought to one side at a pressure higher than exists on the other side. Under such circumstances, if the pores in the filtering medium are of suitable size, the solid particles are held back while liquid passes through. After the first short period of filtering, the effective medium is the layer of solid deposited on the original septum.

1. PRINCIPLES OF FILTRATION

Sperry (*15 CME 198, 17 CME 161*) has determined experimentally that the velocity of flow of liquid through a filtering medium varies directly with the pressure and inversely with the thickness of the cake and that the character of the flow is, therefore, the same as that in capillary tubes under low pressure, which is expressed in the equation $v = \pi pr^4/8l\mu$, where p = difference in pressures at ends of tube, r = internal radius and l = length of opening, and μ = viscosity of liquid. The terms l and r in this equation cannot be determined for any practical filtering problem, but Sperry has expressed them in terms of a unit of resistance R, defined as the resistance of a filtering medium of such permeability that 1 sq. ft. 1 in. thick will pass 1 gal. of water per hr. at 68° F. under a pressure difference on the two sides of 1 lb. per sq.in.; and a unit of deposition or cake-forming ability K, possessed by the solid being filtered, which he defines by saying that a substance has a unit rate of deposition when, under standard temperature conditions, a 1% mixture of the substance with water produces a flow of 1 gal. per hr. over an area of 1 sq. ft. with a pressure difference of 1 lb. per sq. in. With these terms he has developed from the preceding equation the relation

$$Q = \left[\sqrt{\frac{2PKT}{RS} + \left(\frac{KR_m}{RS}\right)^2} - \frac{KR_m}{RS}\right] \frac{N_S(1 + at_1 + bt_1^2)}{N_0}$$

where Q = quantity of liquid passing the filter, P = difference in pressure on two sides of septum, R = resistance of filter cake to passage of liquid, R_m = resistance of septum, K = rate of deposition of cake, T = time, S = percentage of solids in feed pulp, N_S = coefficient of viscosity of liquid at standard conditions and $\frac{N_0}{1 + at_1 + bt_1^2}$ is Poiseuille's statement for viscosity at temperature t_1 compared with the viscosity at t_0, a and b being constants dependent upon the liquid. Sperry has verified this relation experimentally. The equation is not practically useful for purposes of design of filters but it shows that filtering rate increases when pressure and temperature increase and decreases with resistance of the

filter and increase in thickness of the cake. Hatschek (*27 SCI 538*) has shown experimentally that resistance to filtration increases rapidly with decrease in size of particle forming the cake. Hence the equation of capillary flow can be taken as indicative of the effect of variation in the several factors involved in filtration. Walker, Lewis, and McAdams (*Principles of Chemical Engineering, McGraw-Hill Book Co., 1937*) present a series of differential equations for filtration based on the fundamental equation $dV/dt = P/R$, in which V, t, P, and R are volume of filtrate, time, pressure difference, and resistance respectively. This is, of course, a summary of the indications of the Sperry formula. The authors give illustrative examples of the application of the derived equations to design.

Even granting the accuracy of the various theoretical equations presented, they are inadequate for practical design. A rotary vacuum filter usually makes 250 to 500 cycles per 24 hr., and the life of a filter cloth before discard may therefore be 50,000 cycles. Filter cloths diminish in capacity steadily, although slowly, owing to clogging by the finest solid particles, or incrustation by carbonate or sulphate scale; conversely the fabric may suffer actual wear, throughout the period of use. This means that the quantity R of the Lewis equation has a long-time variation that is certainly not determined by laboratory tests on new or comparatively new filter septa, and is probably not determinate even in the laboratory except by runs under conditions closely approximating plant conditions, including duration. Laboratory tests can indicate basic initial performances, but the results must be discounted on the basis of experience to obtain a dependable average output rating.

Young (*42 A 752*), working with vacuum filters and ore slimes, confirms the general trend of the theoretical equations. Fig. 1,*A*, shows the effect of cake thickness on filtering rate; Fig. 1,*B*, the effect

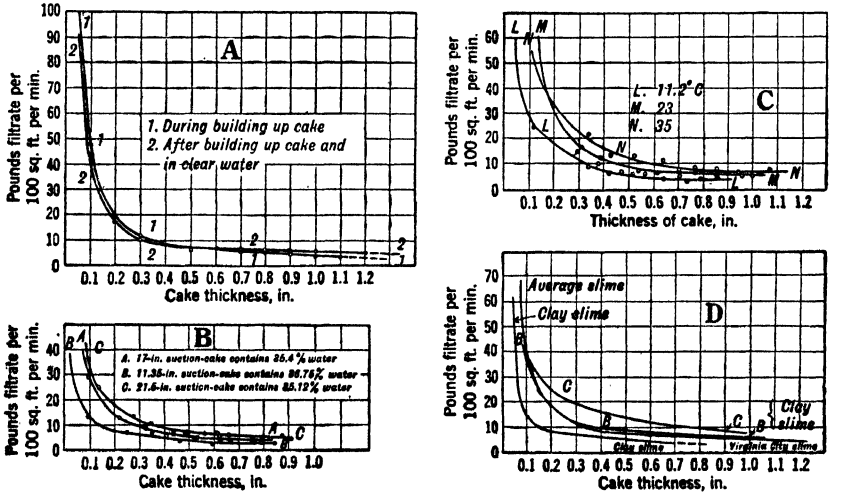

FIG. 1. Effects on filtration of variations in operating conditions.

of variation in vacuum; Fig. 1,*C*, of pulp temperature; and Fig. 1,*D*, of the character of the pulp, all taken from Young's results. He concludes from other work that small changes in the amount of clay in a pulp or in a cake have more effect on the filtering rate than much larger changes in the amount of sand.

2. FILTER MEDIUM

The filtering medium is composed of the porous septum itself plus the cake of filtered material held thereon. The septum may be a bed of solid grains merely piled together and, therefore, incapable of use in any position other than horizontal; it may be a porous slab of artificial material like Filtros; most frequently cotton cloth is used, but woolen, mineral-fiber, synthetic-fiber, and metallic cloths, and punched rubber sheeting are employed increasingly. The septum, in the size and spacing of pores and in the conformation of its surface, has a marked effect on the structure of the cake formed immediately adjacent to it. This follows from the mechanism of cake formation.

Cake formation. When a pressure is imposed on a body of pulp in contact with a porous surface, the liquid of the pulp begins to flow through the pores at a rate dependent upon the pressure differential on the two sides of the surface, and the frictional resistance

to flow. Liquid streaming to the pores carries solid with it, and the solid particles unable to enter the pores are held against the filter surface by the impulse of the liquid flowing against and around them. The phenomenon, and the magnitude of the forces involved, is familiar to anyone who has placed his hand or foot near the submerged outlet of a discharging tank.

If the particles in the pulp to be filtered are smaller than the pores, which is normally the case as to many, if not all, of the particles in the usual pulp with respect to the meshes in filter cloth, they go through, if they approach singly. If, however, as is ordinarily the case, there are so many in the pulp that they approach in a loose mass, they suffer the same fate as a crowd of people making a rush to get through a doorway amply wide to pass two or three or more abreast in orderly array. The result is as pictured diagrammatically in Fig. 2 by Hixson, Work, and Odell (*73 A 225*). An arched bridge of the coarse grains forms over each pore, the smaller being flushed through as the jam started, and this acts as a filter of much reduced pore space to form secondary bridges, etc., until the particles passing are so few and so small as to be invisible to the naked eye, and the filtrate becomes clear. Hixson *et al.* found that filtering surfaces were effective, *i.e.*, would build cakes that yielded clear filtrates, when the ratio of maximum filter opening to maximum particle size in the pulp did not exceed the ratios shown in Fig. 3. This relationship was found to hold for feed-pulp densities over the range of 20 to 60% solids (sp. gr. 2.7); for more dilute pulps smaller ratios were necessary. Over this range also, the thicker the feed pulp the more porous the cake.

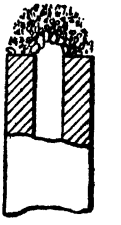

FIG. 2. Bridging of solids over a filter pore.

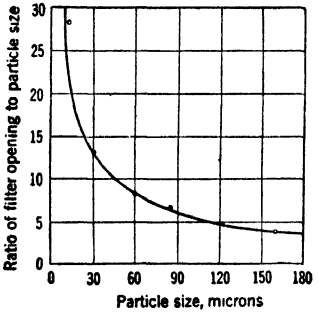

FIG. 3. Relation between filter opening and size of largest particle in pulp to be filtered (*after Hixson et al.*)

Structure of filter cloth. All fabric made from animal (wool, hair, silk) or vegetable (cotton, flax, hemp, etc.) fibers consists of a woven structure of threads, each thread comprising, in general, upward of 10 fibers, twisted together more or less tightly. The fibers range in shape from almost round to straplike, and in surface conformation from smooth to rough. Cotton fiber is straplike, relatively rough, and somewhat twisted.

The porosity and the nature of the surface of a cloth depend upon the size of the threads, how tightly they are twisted, the pattern of the weave, and its mesh. Cotton duck and canvas used for filtering are PLAIN WOVEN, *i.e.*, as a rectangular-mesh screen, of relatively coarse thread, tightly twisted, with warp and woof threads closely spaced. The resulting cloth is hard and strong, and the pores available for filtration are principally only those between the threads; the threads themselves are so tightly twisted as to make interfiber spaces too small for any material flow of liquid. TWILL is woven with two or more warp threads passed over and under one or more woof threads in a regular succession, thus producing the diagonal pattern. Even if the threads were as hard and tight as those of duck and canvas, the weave would be looser and the cloth more generally porous; usually the threads in cotton twill used for filter cloth are also more loosely twisted, making them readily permeable to water. Also the fiber ends, because they have longer projection from the threads (NAP), tend to become imbedded in the lower layers of the cake and thus hold cake to the cloth. This has an advantage when attempt is made to shave off cake and leave an under layer continuously available in place to produce clear filtrate.

Choice of a filter cloth is based on a balance between filtering performance, durability, and cost. Cotton cloth is almost invariably used in ore-milling practice, the usual exception being with acid pulps, which require an acid-resistant cloth such as wool. Cotton cloth has the advantages of great tensile strength, flexibility, durability, small weight, ease of handling and cleaning, and low first cost; it is obtainable in a great variety of weaves which make it adaptable to a wide range of filtering conditions. The cloth should be as permeable as is consistent with production of filtrate of the required clarity; it should be sufficiently tight and closely woven to exclude entry of particles into the interfiber spaces to clog it; it should be sufficiently strong to withstand the pressure differentials applied, and should not disintegrate under the flexure that accompanies cycle reversals; it should withstand chemical attack by the solution; be resistant to light abrasion; and finally should be as cheap as is consistent with the other conditions. Except for special cloths, however, price is usually of secondary importance.

Close-woven canvas duck is strongest. Soft twilled canvas is more porous but less durable. Woolley (*104 J 875*) recommends twill for fine concentrate that makes compact cake, and duck for more granular product for which the cloth itself must do much of the filtering. The fiber of cotton cloths swells materially when wet and fabrics that appear too porous when new may give entirely satisfactory service. Eight- to 10-oz. duck and 12- to 18-oz. twilled canvas are the commonest coverings in milling work. Most plants use from 15- to 17 1/2-oz. twill for the usual flotation concentrate or cyanide pulp. Duck is used for granular material, and, because of its greater strength, for pressure filters. The best covering can be determined only by experiment. This is particularly true when the pulp is highly abrasive, clayey, gelatinous, or chemically active (*e.g.*, pyrrhotite).

TYPES OF FILTERS

The cyanide process produced a large number of different kinds of filters that may be classified fundamentally as (1) vacuum and (2) pressure, depending upon the means employed for effecting the required pressure difference on the two sides of the porous septum. Vacuum filters may be further classified as (*a*) continuous and (*b*) intermittent. Pressure filters are usually intermittent.

3. CONTINUOUS VACUUM FILTERS

These filters are of the drum type, including the Oliver, Feinc, and Dorrco; and the disk type, such as the American. The horizontal revolving-leaf type, of which the Ridgway is best known, and the table type, such as the Caldecott, are little used. A variant of the Oliver filter is designed to receive the feed upon the upper half of the rotating drum surface; it is used for granular or crystalline nonslimy materials.

Oliver filter (Fig. 4) is typical of the drum machines with outside filtering surface (OUTSIDE-DRUM MACHINES).

Drum *a*, mounted on horizontal trunnions carried on tank *k*, is faced with longitudinal wooden staves *b* forming a tight shell. At suitable intervals longitudinal wooden partition strips *c* are fastened to the face of the shell, dividing it into a number of shallow

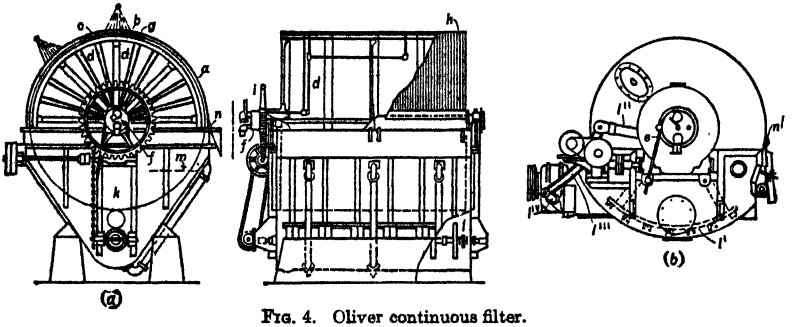

FIG. 4. Oliver continuous filter.

troughs which connect by pipes *d* or flexible rubber hoses with valve *f* (see Fig. 5) and thence with vacuum pump and compressor. The troughs on the face of the drum are filled with suitable backing to support the filter cloth *g*, which covers the entire drum. Cloth is held to the drum by wire *h* wound at 1/2-in. to 1 1/2-in. pitch, or by calking with rope into grooves cut in the upper surface of strips *c*, fastening at the ends of the cylinder by several turns of wire or by box-clamping strip. The wire winding affords considerable protection to the covering; the calked cover is more rapidly placed and removed, and makes the canvas more active. The ends of the drum are partially closed in later forms by an annulus of steel plate, extending above pulp level, which excludes pulp but permits inspection and entry to the interior. Drive is by a worm gear *i* from pulley *j* or from an individual geared motor. The drum revolves (in the view shown) in a clockwise direction with the lower segment immersed in pulp in tank *k*. Feed pulp is kept in suspension by a rotary agitator *l*, which is suited to the V-form of tank pictured, or, in cylindrical tanks (item *B*) by the arc-rake structure *l'*, carried on radial arms from hubs bored to turn on the trunnion shafts, and oscillated by arm *l''*, link *l'''*, and crank l^{IV} from an auxiliary gear.

Valve mechanism is illustrated in Fig. 5. It consists of a port plate *a*, valve seat *b*, and wear plate *c*. The port plate is held stationary by adjusting-rod pin *s* and a rod (*s*, Fig. 4*b*) therefrom attached to the

frame of the filter. Pipes from the filtering compartments on the drum face are connected to the valve seat, and the wear plate *c* is bolted through the valve seat to the trunnion in such a way that the peripheral holes in the two plates register. The valve stem *f* passes through hole *g* in port plate *a*, and the latter is held tightly against *c* by means of a coiled spring on the stem, which bears between a nut on the end of the valve stem and the ground surface *h* on the port plate. Tightness between the filter valve and its seat depends largely upon the pressure induced by vacuum within the filter. In simple filtering, a pipe from *i* runs to the vacuum receiver (Fig. 6), bridge *j* is removed, and solution outlet *k* is plugged. Under such circumstances that part of the drum surface extending from just below the pulp level on the downcoming side, at about point *m* (Fig. 4), to a point to the right of the top of the drum is in suction all the time. The three small ports in plate *a* (Fig. 5) provide for blowing the cake prior to its removal. Air connection is made at *l* and the number of compartments under pressure is regulated by stops *m* and *n*. Holes *p* are for gage connections. When washing is to be done, or if two different vacuum pressures are desired, bridge *j* is inserted and outlet *k* is connected to a second receiver. Wash solution is then withdrawn through the latter outlet. A grease cup at *r* supplies grease to the adjacent ground faces of plates *a* and *c*.

Table 1. Sizes of Oliver filters

Drum		
Diameter, feet	Length, feet	Area, square feet
3.0	0.5	4
3.0	1.0	9
3.0	2.0	18
3.0	4.0	36
5.33	4.0	65
5.33	6.0	100
5.33	8.0	135
5.33	10.0	165
5.33	12.0	200
8.0	6.0	150
8.0	8.0	200
8.0	10.0	250
8.0	12.0	300
11.5	10.0	360
11.5	12.0	432
11.5	14.0	504
11.5	16.0	576
14.0	14.0	616
14.0	16.0	704
14.0	18.0	792

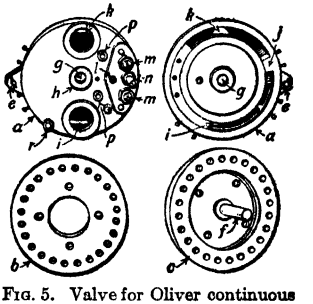

FIG. 5. Valve for Oliver continuous filter.

Cake is discharged by various combinations of compressed air, gravity, and mechanical scraping. In the older forms of filter a steel plate *n*, hinged along the lower edge, lay against the wire winding, and cake, already loosened by an air-blow on the downcoming side above the upper edge of *n*, fell on or was actually scraped away by *n*. In the later forms (item *B*) the position of scraper edge *n'* is from 12 to 24 in. below the drum axis and the air-blow plus gravity are the primary agents in removal; hence *n'* may be spaced a short distance from the drum surface and may act simply to knock off adhering lumps. Edge of *n'* is of rubber, grooved to slip on the scraper blade. Sometimes a taut wire in position *n'* replaces the blade scraper; this arrangement has been found particularly useful with very thin cake.

Sizes of Oliver filters are given in Table 1.

Filter-plant layout is shown diagrammatically in Fig. 6. Dry-vacuum pump *A* takes suction via pipe *B* on trap *C*, from which vacuum line *D* runs to one or two receivers *E*, *E'*. Lines *F*, *F'* are filtrate lines. Filtrate is discharged from the receivers by centrifugal pumps *G*, *G'*, taking suction through lines *H*, *H'*, which should have a minimum vertical length of 2 ft. The filtrate-pump discharge lines are provided with check valves to prevent runback in case of failure in filtrate supply. When more than 30 ft. drop is available below the receivers, filtrate may be discharged by a barometric leg, as shown on trap *C*. One receiver *E'* only is needed when a single filtrate is to be made or a single degree of vacuum is sufficient. If, however, washing is to be practiced, or a low vacuum is required for a part of the filter surface, the second receiver *E'* with its connecting piping is installed. In this case a second vacuum pump with trap is needed, or the two receivers may be connected by a top crossover *I*, with vacuum regulator *H* to increase pressure in the second receiver. The vacuum receiver should be provided with float-head and vacuum-release valve at the outlet to the dry-vacuum pump to prevent liquid passing over into this pump, which is designed with small clearance and would be injured by liquid. For handling hot solutions tank *C* is made a condenser.

Reciprocating vacuum pump connected with the vacuum tank is commonly used to produce vacuum. The pump provided should ordinarily have piston displacement capacity ranging from 0.5 to 1.5 cu. ft. per min. per sq. ft. of filter surface. For very porous cakes as high as 5 cu. ft. per sq. ft. per min. may be necessary. ROTARY BLOWERS, with suction end attached to the vacuum tank, are sometimes used in place of a reciprocating compressor for dry-vacuum production, if low vacuum is sufficient. Wet-

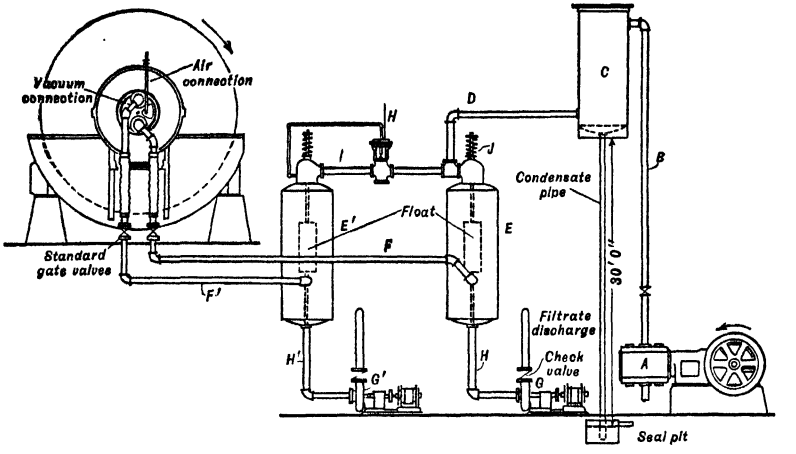

FIG. 6. Layout for vacuum filtration (*after Oliver United Filters*).

vacuum operation has almost ceased in metallurgical plants, because the separate handling of filtrate by centrifugal pumps is more satisfactory, dependable, and economical. CENTRIFUGAL PUMPS used for pumping out a receiver against a high vacuum within the receiver require special design. The pump impeller must be such as to avoid air-binding, and the stuffing-box assembly must be designed to prevent inward air leakage as well as needless filtrate drip.

Table 2. Power requirement of Ingersoll-Rand Type ER-1, 18×7-in. dry-vacuum pump at 350 r.p.m. and 720 cu. ft. per min. piston displacement

Inches of vacuum	Brake horsepower required
12	26.9
15	28.7
16–17	Peak
18	28.7
20	26.9
22	25.2
24	22.3
26	18.2
27	15.2

Power requirement for dry-vacuum pumps is computed from the same equation as that for air compression, with appropriate change of symbols. For a pump working adiabatically

$$\text{Hp.} = \frac{144}{33{,}000} \cdot \frac{n}{n-1} \cdot P_2 V_2 \left[\left(\frac{P_1}{P_2} \right)^{\frac{n-1}{n}} - 1 \right]$$

in which P_2 = absolute pressure in vacuum produced in lb. per sq. in., V_2 = gas volume corresponding to P_2 in cu. ft. per min., P_1 = atmospheric pressure, and n is a constant ranging from a theoretical value of 1.406 down, probably, to 1.15 or 1.2 for ordinary vacuum-pump practice. Table 2 shows the estimates by Ingersoll-Rand of the power required for their Type ER-1 dry-vacuum pump, which is frequently used. By investigation of the power equation throughout the range of the theoretically possible vacuum production for any given conditions, it is found that the power requirement per cubic foot of gas exhausted from a given vacuum passes through a maximum, as indicated in Table 2.

Performances of Oliver filters are given in Tables 3 and 4.

Notes for Table 3:

a For this and 1 @ 8×6-ft. Oliver filter see Table 4.
b Cleaning unsatisfactory.
c Complex bulk.
d Scrubbed with wire brush.
e One operator per shift attends 3 thickeners, 3 filters, and 3 driers.
f Exhauster.
g Light flax canvas.
h Hosed off daily after use.
i Attendance, 0.29 man per shift.
j 3 @ 31×12 I-R and 1 @ 21×9 Reavell for 2 @ 8×12-ft. Oliver and 6 @ 6-disk 6-ft. American filters.
k Use of slappers on lead filters reduced moisture content of cake from 9.5% to 8.5%.
l Daily spray wash.
m 373 r.p.m.
n 690 r.p.m.
o 1 @ 14×8 and 1 @ 22×5 for 2 @ 11 1/2×12-ft. outside-drum and 2 @ 10×12-ft. inside-drum filters.
p 17-oz. Oakdale.
q Filter Fabrics #26.
r Dried and brushed with rotating wire brush
s 200 r.p.m.
t Granular.
u 196 r.p.m.
v No. 8238 National Filter Cloth & Weaving Co.
w Mechanical brushing.
x 197 r.p.m.
B&W Babcock & Wilcox.
I-R Ingersoll-Rand.

Table 3. Performances of Oliver filters on flotation concentrates

Plant	Idaho Maryland	Sunshine	Mammouth St. Anthony	Climax *e*	Climax *e*	Potash Co. of America	Noranda *l*	Mt. Lyell	Cons. M. & S. Co.	
Filter										
Size, diam. × length, ft.	5 1/3×6	5 1/3×10	5 1/3×6	5 1/3×3	5 1/3×10	6×4	8×8	8×12	8×12	8×12
Speed, min. per rev.	3	6.5	4.8	3	3	2	4.5	3.1	4.8	4.8
Vacuum: Inches Hg	24	23	18	16	16	24	20	19	23 1/2	23 1/2
Pump: Type	Oliver	I-R	Oliver	Oliver	Oliver	Roots *f*	B&W	.....	*j*	*j*
Size, in.	14×8 *a*	12×8	9 1/2×8	9 1/2×8	9 1/2×8	2 @ 20×30	21 1/2×9	14×10	*j*	*j*
Operating conditions										
Feed: Nature	Pyrite	Lead	Pb–Zn *c*	Molybdenite	Molybdenite	KCl	Copper	Copper	Lead	Zinc
Size, % <200-m.	92	73	85	90	90	25	48% <325-m.	74	100	94
Solids, %	62	65	50	50	50	55	65–75	65	79	79
Temperature, °F.	Atmos.	Atmos.	Atmos.	Atmos.	Atmos.	90	120	Atmos.	66	66
Tons solid per hr.	3.5	1.5	2.0	1.2	1.7	10	6–9	14.6	16–20	16–20
Cake: Thickness, in.	3/8	1	1/4–1/2	1	1	1	1/2–2	1	3/4–1	3/4–1
Moisture, %	21	6.5	15	20	20	9	8–10	12	8.5 *k*	8.5
Cloth: Material	Cotton	.....	Canvas	Muslin	Muslin	Monel	20-oz. twill	*g*	.....	.....
Cleaning: Solution	Acid	*b*	*d*	Water	Water	Acid	Steam	Water *h*	None	None
Interval, days	90	.....	2–3	2	2	.....	1–6	1	.....	.....
Life, days	360	30	60	30	30	100	27	21	60	60
Performance										
Tons solid per sq. ft. per hr.	0.035	0.0091	0.020	0.0089	0.0103	0.14	0.038	0.048	0.060	0.060
Gal. filtrate per sq. ft. per min.	0.020	0.010	0.028	0.011	0.012	0.20	0.032	0.053	0.018	0.018

Plant	Bunker Hill & Sullivan		St. Joseph Lead Co.				Nev. Cons. Ray	Andes	Nev. Cons. Chino.	New Cornelia
			Desloge	Federal	Bonne Terre	Leadwood				
Filter										
Size, diam. × length, ft.	8×8	8×14	11 1/2×8	11 1/2×12	11 1/2×12	11 1/2×12	11 1/2×12	14×12	14×14	14×14
Speed, min. per rev.	6	6	10	12	6.7	8.7	5	5.8	9.5	7
Vacuum: Inches Hg	14	20	20	16	21	22	22	16	21	24
Pump: Type	Connersville	Connersville	Plunger	Plunger	Duplex	Plunger	I-R	I-R duplex	Worthington	I-R
Size, in.	8×12 *m*	8×12 *n*	14×8	*o*	14×8	22×8	22×8	20×12 *s*	21×12 *u*	23×14 *x*
Operating conditions										
Feed: Nature	Lead	Zinc	Lead	Lead	Lead	Lead	Copper	Copper	Copper	Copper
Size, % <200-m.	97	95	92	88	94	88	90	61	95 *t*	81 *t*
Solids, %	51	61	70	70	70	70	60–70	72–79	70	60
Temperature, °F.	55	55	.....	.....	40–60	.....	60	53	.....	72
Tons solid per hr.	6	4	6	6	5–6	5	17	8	11	11.5
Cake: Thickness, in.	1/4	1/2	3/8	3/8	3/8	1/4	1/4	3/8–1	1/2	1/2
Moisture, %	5.9	7.2	12	13	14	13	12	9.5–12	9	7
Cloth: Material	Cotton twill	Cotton twill	# 26 moleskin	# 223 Twill	# 105 hose duck	# 223 Twill	Twill *p*	*q*	Twill *p*	*v*
Cleaning: Solution	Water *l*	Water *l*	Acid	Acid	None	Acid	Water	*r*	None	5% HCl *w*
Interval, days	1	1	40	90	.....	.....	1	.....	.....	3
Life, days	25	60	106	120	75	120	60	83	100	30
Performance										
Tons solid per sq. ft. per hr.	0.030	0.011	0.021	0.014	0.013	0.012	0.039	0.015	0.018	0.019
Gal. filtrate per sq. ft. per min.	0.052	0.015	0.015	0.0095	0.0083	0.0082	0.083	0.009	0.015	0.025

Notes: See p. 06.

Table 4. Performance of Oliver filters on cyanide pulps

Plant	Idaho Maryland	Wiluna	Beattie Gold Mines	Madsen Red Lake	Paymaster	Wright-Hargreaves	Weepah	Black Hawk	Hollinger
Filter									
Size, diam. × length, ft	8×6	11 1/2×12	11 1/2×14	11 1/2×12	11 1/2×16	14×16	14×16	14×14	14×16
Speed, min. per rev	6	5.5	6	3.7	3	3.2	4	6	3
Vacuum: Inches Hg	24	25	.....	23	22–25	26	22	20	22–26
Pump: Type	Oliver	Pearn	.....	B&W	.....	B&M	Worthington	I–R	I–R
Size, in	*a*	17×10	.....	24×8 1/2	.....	*j*	18×7	18×7	27×14 *m*
Operating conditions									
Feed: Nature	Sulphides	*b*	*b, g*	Siliceous *g*	Siliceous	Siliceous	.....	.....	Siliceous
Size, % <200-m	100	70	61	77	94	*h*	.....	57	78
Solids, %	50	60	50	57	55	50	60	65	55
Temperature, °F	Atmos.	75–90	Atmos.	70	75	80	Atmos.	.....	80
Tons solid per hr	2	8	7.2	16.6	22.9	16.6	14	4.2	22.5–25
Cake: Thickness, in	3/8	5/8	.....	1/2	5/8	1/2–5/8	3/8–1/2	3/8	7/16–1/2
Moisture, %	22	25	20	21	23	22	20	13.5	22
Cloth: Material	Cotton	*c*	32-oz. Twill	*e*	*e*	20-oz. Twill	Twill	#175 Twill	Twill
Cleaning: Solution	Acid	Dil. acid	*d*	Acid	Acid *k*	Acid *d*	Acid	.....	Acid *l*
Interval, days	30	20	7	7 *f*	7	*l*	2	.....	7
Life, days	360	60	90	195	126	60–90	180	75	200–275
Performance									
Tons solid per sq. ft. per hr	0.013	0.018	0.014	0.038	0.040	0.024	0.020	0.0083	0.042
Gal. filtrate per sq. ft. per min	0.015	0.011	0.011	0.034	0.035	0.027	0.016	0.0072	0.038

a 1 @ 14×8 handles this 1 @ 5 1/3×6-ft. Oliver filter.
b Roasted pyritic flotation concentrate.
c 17-oz. coarse-weave canvas.
d Washed and scrubbed.
e Scythes No. ST-10.
f Acid poured on and scrubbed while turning drum.
g Simple dewatering.
h 40% <10μ.
i 2 da. first stage; 1 da. second stage.
j Duplex; 6,300 cu. ft. per min.
k Scrubbed 1/2 hr.
l Drip-pipe application.
m Three, for 15 filters.
B&M Bellis & Morcom.
B&W Babcock & Wilcox.
I–R Ingersoll-Rand.

Filter cloth. See Art. 2.

Re-covering, including removal of old cover and rewinding, requires a time and crew that depend principally upon the size of filter, wire spacing, and skill of the crew. From 5 to 8 hr. with a crew of 3 is about a minimum for a large Oliver unit; 36 hr. with a crew of 4 has been reported, but is excessive.

Scraper blade is ordinarily of steel; the edge should be kept smooth both to insure thorough removal of cake and to guard against tearing cloth. Wooden and rubber or rubber-edged scrapers have been used to reduce wear on the cloth. Experience indicates that the edge of the scraper should be a blunt bevel.

Portland filter is the predecessor of the Oliver.

Feinc filter (Fig. 7) is similar to the Oliver in general construction; it differs in the method of discharging cake. A plurality of parallel endless strings *a*, spaced about 1/2 in., runs around the drum and over discharge roll *b* and return roll *c*, the former being adjustable to maintain string tension. These strings are driven by the drum. At the line along the face of the drum where the strings leave the drum, cake is lifted and travels on the bed of suspended strings until they pass over the discharge roll; here the sharp flexure causes the cake to break away and drop. A comb *d* guides the strings evenly back onto return roll *c*, and also serves to scrape off lumps of adhering cake. The Feinc valve is simpler than that of the drum machines which utilize air pressure for loosening and discharging cake, and no air-compressing apparatus is necessary.

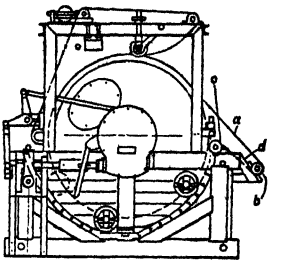

FIG. 7. Feinc filter.

Performances are given in Table 5.

Table 5. Performance of Feinc filters

Plant	Aldermac	Noranda	Gunnar Gold	Buffalo Ankerite
Filter				
Size, diam. × length, ft	5×6	8×8	8×12	10×16
Speed, min. per rev	5	5.8	7.5–3.8	.....
Vacuum: Inches Hg	25	20	26	25
Pump: Type	I-R	B&W	I-R	B&W
Size, in	22×9	21 1/2×9	22×9	No. V 2/5
Operating conditions				
Feed: Nature	Pyrite *FC*	Copper *FC*	Siliceous *d*	Siliceous *d*
Size, % <200-m	77 *a*	89% <325-m.	80	85
Solids, %	59	55–65 *a*	50	60
Temperature, %F	50	86	75	.....
Tons solid per hr	4	6–9	6.3	27
Cake: Thickness, in	3/4	1/4–3/4	1/2–3/8	5/8–3/4
Moisture, %	9.5	12–15	20	22
Cloth: Material	*b*	*c*	Canvas	Twill
Cleaning: Solution	Water	None	Acid	Acid
Interval, days	Spray	.....	30	5
Life, days	50	125	100	65
Performance				
Tons solid per sq. ft. per hr	0.042	0.037	0.066	0.044
Gal. filtrate per sq. ft. per min	0.063	0.039	0.079	0.032

a Slimy.
b Scythes #348 mercerized.
c No. 34B sq.-mesh cotton.
d Cyanide pulp.

B&W Babcock & Wilcox.
FC Flotation concentrate
I-R Ingersoll-Rand.

Dorrco filter (Fig. 8) is of INSIDE-DRUM type, *i.e.*, the filtering surface *a* is on the interior surface of a drum comprising shell *b*, closed valve-head end *c*, and partly open discharge-end head *d*. The drum carries two riding rings *e* (these are rolled H-beams for 10-ft. diam. and larger) which rest on two pairs of rollers *f* and *g*, the former driven by sprocket *h* from a suitable source of power, the latter by sprocket and cross chain *i* from *f*. The automatic valve *j* (similar to Fig. 5) connects the suction pipes *k* successively with the vacuum system, and, through pipe *l* with compressed-air pulsator *m* driven by chain from a sprocket on the shaft of rollers *g*. Filter cloth *a* is supported on screen *n* and screen supports *o*; it is held on the edges by calking *p* and is secured longitudinally by further calking into division channels *q*. Feed is introduced by pipe at *r*, on the downcoming side. Spraying of cake is done on the upcoming side at *s*. Cake falls into chute *t* carried on outer support *u*, and an inner support *v* which rides on stub shaft *w*. If length of drum makes gravity discharge through

Table 6. Operation of Dorrco filters

Plant	St. Joseph Lead Co., Bonne Terre	Copper Range		Shenandoah Dives	N. J. Zinc Co.	St. Joseph Lead Co., Edwards	El Potosí	St. Joseph Lead Co.,	
								Mine La Motte	Desloge
Filter									
Size, diam. × length, ft.	4×1 1/2	6×3	6×4	6×2 1/2	8×8	8×14	8×12	8×14	8×2
Speed, *min.* per *rev.*	1.3	10	6	2.8	10.8	6	2.5	5	0.8
Vacuum: Inches Hg	10	25–28	28	15	11.5	16	22	15	10
Pump: Type	Plunger	I-R	I-R	C.P.T. Co.	I-R	Plunger	Rotary	Plunger	Plunger
Size, in.	14×8 *b*	18×6	18×6	17×10 *f*	14×5	26×11 *j*	A-C No. 58	22×8	14×5
Operating conditions									
Feed: Nature	Lead GC	Native Cu *c*	Native Cu, *FC*	*FC*, Pb-Cu-Zn *c*	GC *g*	*FC*, Pb	*FC*, Zn	*FC*, Pb	*GC*, Pb
Size, % <200-m.	68	69	78	97	43	91	45	46	70% >100-m.
Solids, %	60	10	17	50	72	43	80	70	88
Temperature, °F.	40–60	59	59	40	Atmos.	Atmos.	Atmos.	.....	.....
Tons solid per hr.	4–5	0.23	0.60	0.20	2.5	7	21	3.3	10
Cake: Thickness, in.	1/4	1/8–1/4	3/8	1/4	1.4	5/8	1 1/8	1/4	3/4
Moisture, %	3.2	10	10	13	14	7.6	7.5	5	3.3
Cloth: Material	*a*	No. 4224	No. 4224	CR Twill #150	Burlap	No. 26	Cotton	.....	#105 hose duck
Cleaning: Solution	None	Water *d*	Water *d*	Water *e*	Water	*l*	None	Acid	None
Interval, days	.....	3 1/2	3 1/2	2	*h*	*l*	.....	.....	.....
Life, days	25	240	240	40	40	.....	10	120	50
Performance									
Tons solid per sq. ft. per hr.	0.24	0.0041	0.0080	0.0042	0.012	0.020	0.070	0.0094	0.22
Gal. filtrate per sq. ft. per min.	0.35	0.013	0.023	0.0064	0.0067	0.040	0.035	0.0094	0.077

Plant	St. Jos. Lead Co., Leadwood	Aldermac	Mufulira	St. Jos. Lead Co., Federal	Shenandoah Dives	International Nickel Co.		Nev. Cons., McGill
Filter								
Size, diam. × length, ft.	8×2	8×12	10×4	10×12	10×5	14×16	14×16	14×14
Speed, min. per rev.	0.67	6	5	0.5	4	4–6	4–6	6.7–17.5
Vacuum: Inches Hg	8	.....	22	11	15	23	23	20
Pump: Type	Plunger	I-R	I-R	Plunger	C.P.T. Co.	I-R	I-R	Oliver
Size, in.	14×8	22×9	22×9	14×5 *m*	17×10 *f*	31×12 *n*	31×12 *n*	14×8
Operating conditions								
Feed: Nature	*GC*, Pb	*FT*, *k*	*FC*, Cu, *c*	*GC*, Pb	*FC*, Pb-Cu-Zn, *e*	*FC*, Cu	*FC*, Ni-Fe	*FC*, Cu
Size, % <200-m.	69% >100-m.	44	87	60% >100-m.	97	65	65	52
Solids, %	80	44	56	60	50	65	65	65
Temperature, °F.	.....	50–90	78	.....	40	Atmos.	Atmos.	40–70
Tons solid per hr.	7.5	5	13.5	5	1	32–33	32–33	25.3
Cake: Thickness, in.	1/2	5/8	1/2–1	1/4	3/8	5/8	5/8	Var.
Moisture, %	3.0	7.2	9.8	3.5	11	8.7	11.3	8.6
Cloth: Material	#105 hose duck	18-oz. duck	.....	#105 hose duck	CR Twill #150	Twill	Twill	17-oz. Oakdale
Cleaning: Solution	None	Acid	*l*	.....	Water *e*	Acid	Acid	*o*
Interval, days	.....	.....	10	.....	2	10–12	10–12	10–15
Life, days	36	14	20–40	6	60	35	35	29
Performance								
Tons solid per sq. ft. per hr.	0.15	0.018	0.11	0.013	0.0064	0.046	0.046	0.041
Gal. filtrate per sq. ft. per min.	0.10	0.035	0.15	0.019	0.010	0.048	0.044	0.043

Notes for Table 6:

a No. 126 hose duck.
b Duplex.
c Slimy.
d Scrub.
e Hosed.
f One for 1 @ 6×2 1/2-ft. and 1 @ 10×5-ft. Dorrco filter.
g Granular willemite and franklinite.
h Steady spray.
i Scales up in 4 to 6 wk.; no remedy known.
j For 2 @ 8×14-ft. and 2 @ 12×16-ft. Dorrco filters.
k Granular.
l Acid and alkali washes. Lime scale and coal dust from dross, which is added to raise iron content, are chief troubles.
m For two filters this size.
n Two at 220 r.p.m. for 12 filters.
o Steel scraper.
C.P.T. Chicago Pneumatic Tool.
FC Flotation concentrate.
FT Flotation tailing.
GC Gravity concentrate.
I–R Ingersoll-Rand.

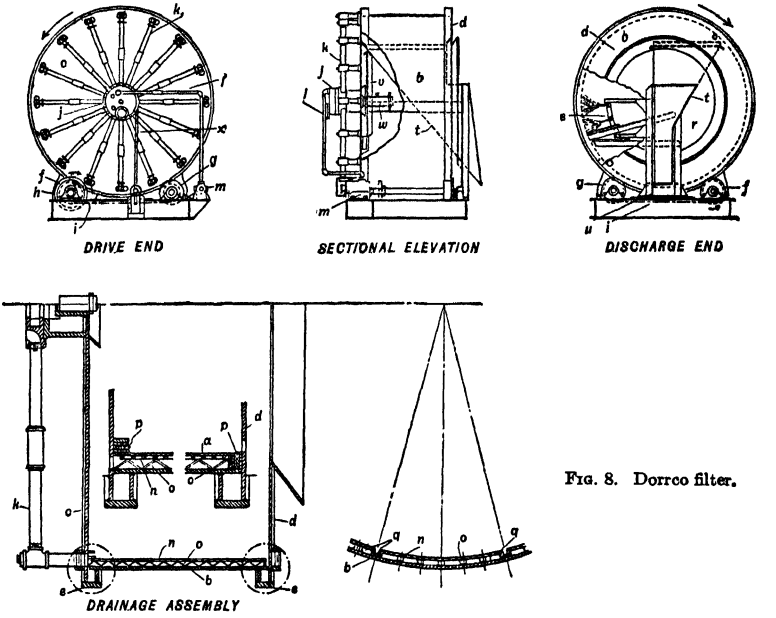

FIG. 8. Dorrco filter.

a chute impossible, the lower part of chute *t* is replaced by a screw or belt conveyor suitably supported outside. Rod *x* is for valve adjustment.

This filter is particularly adapted to use with coarse pulps that are difficult or impossible to maintain in suspension in the tank of an outside-drum machine; the rapid sedimentation aids in forming a porous-grain cake next to the cloth.

Performances are given in Table 6.

American Filter (Fig. 9) consists of a plurality of disk-shaped filter leaves *a* mounted on a heavy hollow shaft *b*, caused to rotate by means of the worm gear *c* and worm driven through gear *k* either by a motor-driven gear speed-reducer *e* and motor *l* or by pulley *f*.

The lower parts of the revolving disks dip into a tank *g* which is partitioned on the front side of the central shaft in order to allow for discharge

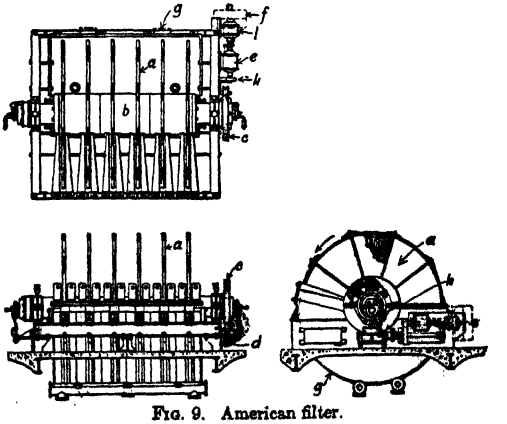

FIG. 9. American filter.

Table 7. Performance

Plant	San Francisco Mines of Mexico			Cons. M. & S. Co.	U. S. S. M. & R. Co., Midvale		
Filter							
Size: Diam., ft.	4	4	4	6	6	6	6
No. of disks	6	3	6	6	10	10	10
Speed, min. per rev.	3.5	7	4.25	5.8	8	.....	1
Vacuum: Inches Hg	19	19	19	23.5	24	24	24
Pump: Type	Rotary			Plunger	I–R	I–R	I–R
Size, in.	A–C No. 58 *a*			*c*	*e*	*e*	*e*
Operating conditions							
Feed: Nature	*FC*, Pb	*FC*, Pb	*FC*, Zn	*FC*, Zn	*FC*, Fe	*FC*, Zn	*FC*, Pb
Size, % <200-m.	70	70	59	95	22	19	10
Solids, %	78	71	60	49	65	65	65
Temperature, °F.	Atmos.	Atmos.	Atmos.	66	Atmos.	Atmos.	Atmos.
Tons solid per hr.	7.6	4.2	1.2	10–15	7	6	15
Cake: Thickness, in.	3/4	3/4	1/4	1/4	3/4	3/4	1/2
Moisture, %	7.5	7.7	13	9.5	11	9.5	10
Cloth: Material	# 175 twill	# 175 twill	# 175 twill	.....	Twill	Twill	Twill
Cleaning: Solution	None	None	None	*b*	Water *d*	Water *d*	Water *d*
Interval, days	.....	.....	.....	.....	7	7	7
Life, days	26	29	26	103	25	30	60
Performance							
Tons solid per sq. ft. per hr.	0.063	0.070	0.010	0.046	0.016	0.013	0.033
Gal. filtrate per sq. ft. per min.	0.037	0.060	0.011	0.076	0.015	0.013	0.033

Plant	Eagle Picher, Ruby			Sunshine	Aldermac	Sherritt-Gordon	Britannia Beach M. & S. Co.
Filter							
Size: Diam., ft.	6	6	6	6	6	6	8 1/2
No. of disks	4	2	2	3	3	6	6
Speed, min. per rev.	4.5	4.8	4.8	4.25	8	5	1
Vacuum: Inches Hg	15	15	15	23	25	24	25
Pump: Type	I–R			Oliver	I–R	I–R	I–R
Size, in.	1 @ 18×6			14×8	22×9 *j*	17×8	2 @ 22×8
Operating conditions							
Feed: Nature	*FC*, bulk	*FC*, Pb	*FC*, Zn	*FC*, Pb	*FC*, Cu	*FC*, Cu	*FC*, Cu-Fe
Size, % <200-m.	All granular			73	77	61	Fine to granular
Solids, %	46	50	47.5	60	59	50	60
Temperature, °F.	Atmos.	Atmos.	Atmos.	.....	50–90	73	40
Tons solid per hr.	1.7	1.1	0.63	1	4	7.5	9
Cake: Thickness, in.	1/4–1/2	1/4–1/2	1/4–1/2	1/2–1	1/2	3/4	1/2
Moisture, %	10	7	15	8	9.5	8	10
Cloth: Material	.....	.....	.....	# 175 twill	18-oz. duck	Twill	Twill
Cleaning: Solution	*h*	*h*	*h*	*i*	Acid	Water *d*	.....
Interval, days	15	15	15	*i*	.....	15	.....
Life, days	30	30	30	22	14	30	17
Performance							
Tons solid per sq. ft. per hr.	0.0094	0.012	0.0070	0.0074	0.030	0.028	0.028
Gal. filtrate per sq. ft. per min.	0.016	0.021	0.011	0.0094	0.038	0.047	0.034

a 690 r.p.m.
b Taken off for cleaning.
c 3 @ 31 ×12-ft. I–R and 1 @ 21 ×9-ft. Reavell for 2 @ 8 ×12-ft. Olivers and 6 @ 6-ft. 6-disk American.
d Scrubbed.
e 1 @ 22 ×8 and 2 @ 22 ×9 for three filters.
f Considerable slime.
g 1 @ 18 ×7 I–R and 1 @ 16 1/2 ×7 1/2 B&W for two filters.
h Bags removed and scrubbed.
i Cleaning unsatisfactory.
j Two 1 @ 5 ×6-ft. Feinc, 1 @ 8 ×12 Dorrco and this filter.
k Granular.
l No. 8828 Nat'l Filter Cloth & Weaving Co.

of American-type filters

Falconbridge	El Potosí	Tennessee Copper Co.			Combined Metals Reduction	Britannia Beach M. & S. Co.	
6	6	6	6	6	6	6	6
6	4	2	3	1	8	6	6
5	5	10	2.7	10	5	1	1
25	22	25	25	25	18	25	25
g	Rotary	I–R			I–R	I–R	
g	A–C No. 58	22×8 @ 175 r.p.m.			26×11	2 @ 22×8	
FC, Ni-Fe	*FC*, Pb	*FC*, Cu	*FC*, Fe	*FC*, Zn	*FC*, Pb & Zn	*FC*, Cu-Fe	*FC*, Cu-Fe
58 *f*	62	83	78	88	80	Fine to granular	
55–65	80	75	80	40	40	65	60
85	Atmos.	70	70	70	86	40	40
3.5–4	20	3.5	17	0.5	4	36	12
1/2	3/4	3/4	1 1/4	1/8	.....	3/4	1/2
11–13	7.5	10	9	8	12	10	9
Twill	Cotton	Twill	Twill	Twill	Twill	Twill	Twill
None	None	None	None	None	None	.....	.....
.....	.....	.....	.....	.....	.....	.....	.....
60	8	30	15	30	45	15	17
0.014	0.111	0.039	0.126	0.111	0.011	0.134	0.044
0.016	0.055	0.023	0.054	0.231	0.021	0.134	0.054

New Cornelia	Buffalo Ankerite	McIntyre Porcupine				Paymaster	Utah Copper Co.	
							Magna	Arthur
8 1/2	8 1/2	8 1/2	8 1/2	8 1/2	8 1/2	8 1/2	12	13
6	6	8	8	8	8	6	4	4
12	.....	Var.	2.2	3.3	6.6	2.8–3	15	15
24	25	24	24	24	24	22–25	23	23
I–R	B&W	I–R				I–R	I–R	I–R
23×14 *n*	No. V 2/5 *o*	23×12 *p*				*r*	27×14 *t*	27×14 *s*
FC, Cu	Siliceous, *Cy*	*FC*, Fe	*FC*, *Cy*	*FC*, *Cy*	*FC*, *Cy*	Siliceous, *Cy*	*FC*, Cu	*FC*, Cu
81 *k*	85	76	99	99	99	92–96	78	78
60	60	20–25	40–45	55–60	55–60	55	57	57
72	.....	50–75	70–84	70–84	70–84	.....	Atmos.	Atmos.
21.9	27	2–3	5	10	10	22.9	12	12
1	3/4	1/16	3/16	5/16	5/16	3/4	1/2–2	1/2–1 1/2
8	20	16	18	18	18	17	9.6	9.7
l	20-oz. twill	32-oz. twill				ST-10 twill	Duck	Duck
5% HCl *m*	Acid	None	Acid	Acid	Acid	Acid *q*	None	None
3	5	.....	10	5	5	10	.....	.....
30	54	22				40	43	43
0.067	0.084	0.0058	0.012	0.023	0.023	0.071	0.017	0.014
0.086	0.067	0.0142	0.019	0.022	0.022	0.080	0.023	0.018

m Mechanical brushing.
n 197 r.p.m. Serves 2 @ 14×14-ft. Olivers and this filter.
o For 1 @ 10×16-ft. Feinc and this filter.
p Two of these for 7 filters.
q Soaked 3/4 hr.
r 2 @ 18×6 and 1 @ 18×7 serve 1 @ 11 1/2×16-ft. Oliver and 2 of these machines.
s Three of these.
t Av. in use 1937 was 3.2.
B&W Babcock & Wilcox.
Cy Cyanide.
FC Flotation concentrate.
I–R Ingersoll-Rand.

of cake. Each filter disk consists of several sector-shaped units which connect by means of conduits in shaft *b* with a valve that is the same as that used on the Oliver filter. During the time that any given sector is submerged, and for a time after its emergence, it is connected with the filtrate outlet port through a conduit in the shaft and a corresponding channel in the journal. On further emergence it connects with the wash-water outlet port, if washing is required, and finally, just before it reaches the scraper, it connects with the compressed-air port and the cake is loosened.

Standard sizes are 4-ft. (disk diameter) × 1- to 4-disk, 6-ft. and 8 1/2-ft. × 2- to 10-disk, and 12 1/2-ft. × 5- to 12-disk.

Performance of American filters is shown in Table 7.

Ridgway filter consists of a number of horizontal filter trays carried on the ends of radial arms extending from a central revolving spindle. The trays travel over a series of annular tanks, a mechanism being provided to lift each tray over the partitions between the tanks. In cyanide work the first tank contains leached slime; the second, weak solution; a third, wash water; and the remaining 15 to 20° of arc constitutes the discharge hopper. The valve is similar in principle to the drum valve. Use of the filter has been principally restricted to So. African and Australian cyanide mills.

4. OPERATION OF CONTINUOUS VACUUM FILTERS

Elements of filter performance are dryness of cake, clarity of filtrate, rates of production, and power consumption, maintenance, and attendance.

Dryness is of major importance in dewatering concentrate, since saving freight on water is the primary purpose of the operation. Dryness is favored by high porosity of cake, uniformity of cake resistance, a relatively low pressure gradient, and a relatively small pressure differential.

Dryness in practice (Tables 3 to 7) does not differ materially as between the various filters. There is, however, a marked difference according to the pulps, as regards both nature and specific gravity. Cake made from fine cyanide pulps ranges from 13.5 to 25% moisture on 15 pulps, with the majority of the operations clustering around 20 to 22%; lead flotation concentrates carry 5 to 10% moisture normally, with the average about 7%; copper flotation concentrate ranges from 7 to 15%, average about 9.5%; pyrite flotation concentrate, 9 to 21%, average about 12%; bulk-flotation concentrate, 7 to 15%, average about 10.5%; and zinc flotation concentrate which, on a specific gravity basis, would be expected to be higher than pyrite, ranges from 7.2 to 15%, average from 9 to 10%. The relatively low moisture content in zinc cake is a reflection of the average longer haul to the zinc smelter. Lead table concentrate averages 3.2% moisture (range 3 to 3.5%) in four southeast Missouri lead plants.

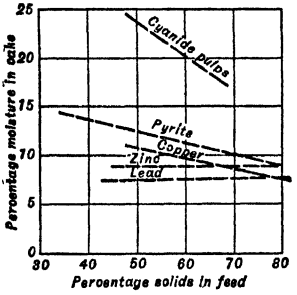

FIG. 10. Feed-pulp density *vs.* cake moisture.

While there is, for any given pulp, a definite relationship between cake moisture and density of feed pulp for a given submergence time, no such relationship may be asserted for the heterogeneity of pulps in Tables 3 to 7. When, however, these are sorted on the basis of general mineralogical character, the extremely approximate trends shown in Fig. 10 are discernible.

Clarity of filtrate is important in hydrometallurgical operations because subsequent processing consists in selective precipitation, and in general solid material in the primary filtrate goes with and contaminates this precipitate. Clarity requires low porosity of cake and uniform resistance; these are normally concomitants of a steep pressure gradient and large over-all pressure drop.

Porosity of cake is primarily a function of the size and size range of the solids; the coarser the aggregates and the shorter their size range the higher the porosity. Hence a granular pulp makes a dry cake; admixture of finely granular material with slimes, *e.g.*, fine gravity concentrate with flotation concentrate, tends to make dry cake; and flocculation (see Sec. 15, Art. 3), which, in effect, increases the size of the small particles and shortens the size range, also aids in drying. Porosity depends also on the way in which cake is formed (Art. 1); in a long-range pulp, anything that promotes early preferential presentation and deposition of granular material on the filter medium makes for relatively higher porosity of the system of cake and cloth.

Resistance of cake depends on its porosity and thickness and on the viscosity of the liquid withdrawn. Uniform resistance requires that the cake be uniform in thickness, uniform circumferentially in particle-size distribution, and that it be maintained free of cracks. Nonuniform resistance tends to correct itself by increased deposition in the parts of low resistance while the cake is submerged, but after emergence fluid flow in the areas of low resistance is much higher than elsewhere, with the result that a "dry hole" is soon

formed, the pressure differential falls, and there is insufficient pressure differential remaining at the wet areas to drive liquid through them.

Cracking of cake is caused by the shrinkage which develops in some fast-filtering pulps during drying. It may be lessened by speeding up the drum and making thinner cake. A mechanical device used in dewatering service on outside-drum types, called a FLAPPER, consists of a rotating shaft, parallel to and close to the drum surface, carrying strips of fabric, leather, or rubber that pound the cake surface with a rapid succession of sharp blows. The pounding compacts the cake, closes up cracks, and eliminates some moisture. In cyanide filtration the surface must be kept clear for best application of wash; cracking is prevented, in part, by the sheet of wash-liquid, and the liquid also tends to seal cracks and prevent excessive drop in pressure differential.

Another method of preventing cracking is to apply a canvas belt on the upcoming side just ahead of the line where cracking starts and to lead it away before the vacuum is released.

Pressure gradient. There is little or no exact knowledge available on this subject. It is inferable from the structure visible in long-range cakes (Fig. 2) that the gradient is steeper at a distance from the cloth than in the layers adjacent thereto. This inference is supported by Young's observation (*42 A 752*) that the outer layers of cakes made from slimy pulps are wetter than the inner. It is further inferable that the gradient becomes increasingly steep as the cake thickens, since the outer layers of the cake become increasingly finer owing to the inability of the inward currents to hold coarse grains.

Pressure differential is, in general, higher the finer the feed; it ranges, in the practice reported, from about 10 in. of mercury for fine gravity concentrate to 28 in. for slimy, platy native-copper flotation concentrate. The usual range for all types of flotation concentrate is 20 to 24 in. Filtering rate increases generally with pressure except that in pulps containing flocculated gelatinous matter (*e.g.*, ferric hydroxide), pressure sufficient to squash the flocs may decrease porosity and thus decrease filtering rate; and high pressures with pulps containing much very fine solid may drive solid into the cloth and, by clogging interfiber pores, decrease rate over a period of time. The best rule is to use the minimum differential that gives a reasonable flow of filtrate and to seek dryness by using a thinner cake or a longer drying time. The degree of vacuum obtainable in a given unit depends on the porosity of the cake and the size of vacuum pump available. Different pressures may be maintained on the submerged and unsubmerged parts of the drum by independent vacuum connections provided in the valve.

Thickness of cake made with a given pulp depends upon the pulp density, the time of submergence, and the pressure differential. For high capacity and dry cake the pulp should be as thick as possible.

Trauerman (*104 J 87*) reports a test on an 11.5×16-ft. drum machine on which 35 dry tons of cake containing 20% water were made in 8 hr. from a feed pulp containing 35% solids, and 51 tons containing 12% moisture were made in the same time from a pulp containing 55% solids. At SUNNYSIDE, with feed containing 30 to 35% water, cake was 1 1/4 in. thick and contained 8% water, while with feed containing 40 to 45% moisture, cake was 1/2 in. or less thick and contained 10% moisture. Thickening in tanks costs, in general, less than 1¢ per ton of solids; filtration costs, at the least, 1.5¢, and may cost upward of 25¢; hence the more preliminary thickening, up to the point where the time for further consolidation becomes excessive, the cheaper the whole operation. The filter tank may be shallower with thick feed than with thin, which gives more time for drying cake. It is also harder to maintain suspension of thin pulps.

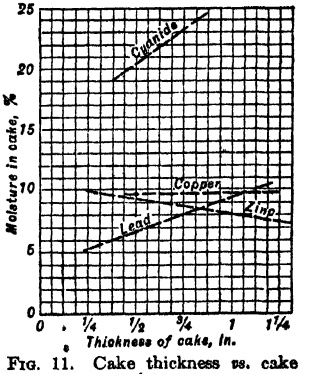

FIG. 11. Cake thickness vs. cake moisture.

In general the thinner the cake the drier it can be discharged. The relationship is, however, obscured when a number of pulps of different characteristics at different mills are compared (Fig. 11) because the filters tend to be run for maximum dryness, and cake is thinned to produce this result. Thus the majority of the copper mills reporting were apparently running to make 9 to 10% moisture, and they varied cake thickness from 3/8-in. to 1 1/4-in. to attain this result.

Practice, as represented by Tables 3 to 7, shows a range of cake thickness for metalliferous flotation concentrates from 1/16-in. for one pyritic gold ore to 2-in. for copper. Mean thickness is least for zinc (1/4-in.) and greatest for pyrite (5/8-in.); over-all mean is close to 1/2-in. The mean for cyanide pulps is also about 1/2-in. As between different filters, mean thickness is least on the Dorrco (3/8-in.); it is between 3/8- and 1/2-in. on the outside-drum machines, and 1/2- to 3/4-in. for the disk machines. Variation of cake thickness with approximate submergence time for all filters is shown in Fig. 12; the relationship is rough, since no account is taken of different types of pulp, or of the thickness of feed pulp,

but the dotted line approximates reasonably what is to be expected for an average pulp thickened to a consistency approximating that of 50 to 60% solids (sp. gr. 2.7) by weight.

Submergence time determines thickness of cake; it itself is determined by diameter of the rotary element, its speed, and the depth of submergence. Range of time (Tables 3 to 7) is from about 15 sec. for Dorrco filters dewatering table lead concentrates to about 5 min. on copper flotation concentrates; mean is about 1.2 min. for Dorrco filters, about 2 min. for outside-drum machines, and 1.6 min. for disk machines.

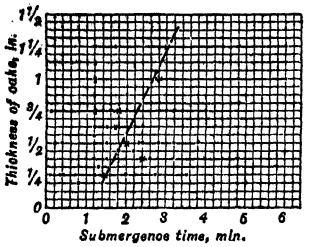

FIG. 12. Submergence time *vs.* cake thickness.

Recent designs of outside-drum filters placing the cake-discharge point below the drum axis have made it necessary to sacrifice depth of submergence. Instead of compensating by decreasing speed, speed has actually been increased. This takes advantage of the fact that the rate of increase in cake thickness falls rapidly with time after a short initial period, and by increasing the number of times that a square foot of cover is permitted to form cake at maximum rate, capacity is increased. The thinner cake dries faster and the decreased submergence and lower discharge point both contribute to longer drying time for a given filter at a given speed, thus permitting the higher speed.

Heating lowers the viscosity of the liquid and also tends to cause flocculation of fine solids. On both scores it increases filtering rate and it may also decrease the moisture in the cake. Heating to 100 to 120° F. is a common procedure in treating flotation concentrate. Heating of cyanide pulps is accepted practice in Canadian gold-cyanide plants to achieve good extraction. A temperature of 80° F. is considered desirable.

At AFTERTHOUGHT, heating pulp increased tonnage 17% to 750 lb. per sq. ft. per 24 hr. in a cake containing 15% water. Watt (*57 A 379*) stated that in treating lead concentrate in southeast MISSOURI, heating to 120° F. increased capacity 20% and decreased moisture in cake 2% (to 15% final). At UTAH COPPER CO. pulp is both heated and agitated by live steam injected into the filter tank. Experience shows that the hotter the pulp the drier the cake (*117 P 752*).

Cake-release pressure should be kept as low as possible; the usual pressures for the older outside-drum types are from 7 to 15 lb. per sq. in.; 2 to 5 lb. may be employed with the low-discharge outside-drum types, the inside-drum type, and the string type. High pressures keep the filter cloth cleaner, but excessive pressure is likely to cause the cover to split at the fastenings, especially when acid cleaning is used and the acid is not completely neutralized before operation starts again.

Agitation of some sort is necessary in under-fed filters to keep solid suspended in the filter tank. In the outside-drum machines it is effected by an oscillating stirrer, whereas in the disk types the pulp is up-fed through nozzles in the bottom of the tank at a sufficient rate to maintain suspension, even though this may involve overflow of some of the pulp and return to the feed surge tank, which should have about twice the capacity of the filter tanks. In the inside-drum machine settling is desirable, and agitation is, therefore, avoided.

When a plant makes both table and flotation concentrate, a good scheme for dewatering is to send the table concentrate to a mechanical classifier, join the overflow with the flotation concentrate, and thicken and join the granular discharge from the classifier with the spigot product from the thickener in a surge tank feeding the filters. The thickened slime concentrate readily keeps the granular material in suspension. The granular table concentrate will probably increase the capacity of the filter on the flotation concentrate.

Capacity of filters is expressed in terms of weight of dry solid filtered per unit of area per unit of time, or as volume of filtrate per unit of time per unit of area, according to whether drying or recovery of filtrate is the aim. Tables 3 to 7 show no certain correlation between unit capacity and type of filter, general mineralogical character of feed, or fineness of feed. The most that can be said on the basis of the figures reported is that on the average the filters are making from 0.030 to 0.040 dry ton of cake per hr. per sq. ft. of filtering surface on flotation concentrate and on cyanide pulps alike, with a range from 0.007 to 0.134; the performances bear no simple relation to size of feed or to moisture content thereof. Average for 15 performances on lead flotation concentrate is 0.032 and that for 7 on zinc is 0.031 ton per sq. ft. per hr.; the specific-gravity advantage of the lead is apparently balanced off by the fact that in differential flotation there is a tendency for dispersed clayey and micaceous slimes to go with the lead, leaving the zinc correspondingly more readily filterable. Confirmatory of this explanation is the average of 0.041 ton per sq. ft. per hr. for pyrite, which is doubly deslimed in lead-zinc-iron differential work. Lead

gravity concentrate, which is substantially completely deslimed, averages about 0.2 ton per sq. ft. per hr. AVERAGE FILTRATE RATE in g.p.m. per sq. ft. per hr. is numerically very nearly the same as the solid tonnage rate; it averages 0.035 for 13 generally siliceous cyanide pulps, and 0.176 for 3 lead gravity concentrates. With a given type of pulp, this figure definitely decreases with increase in solid content of feed, as is consistent with the parabolic character of the filtrate-time curve.

Blinding of filter cloth occurs both by mechanical entanglement of solid material in the pores and by incrustation of fibers by chemical precipitates, usually carbonates and sulphates. Carbonates can ordinarily be dissolved by an acid wash; calcium sulphate is soluble in water; the basic sulphates of the heavy metals, and ore particles, are not soluble to the extent necessary for removal by solution in either water or solutions against which the cloth itself is resistant. They must, therefore, be removed by scrubbing or other methods of washing.

Acid-wash solution is usually HCl, 1 to 2% maximum strength, but 5% solution was used at SLADEN MALARTIC, the wash being correspondingly shortened to guard against mercerization and attack on metal, and being followed immediately by an abundant water wash.

The abrasion in scrubbing tends to break the fibers of threads, weakening the fabric and shortening its life. Carbonate precipitation is most active at the surfaces of the cloth where the maximum contact of air (carrying CO_2) with solution carrying base- and earth-metal ions occurs. Hence if an acid-treat is given at short intervals (daily, if practicable) the cloth can usually be kept porous with subsequent hosing or light scrubbing, and the heavy scrubbing necessary to deform the threads to wash out internal dirt need be done only at long intervals. When acid-treating is required, the interval between treats should rarely exceed one week.

Life of cloth depends upon the kind of cloth and the mechanical treatment that it receives. A summary of the lives reported in Tables 3 to 7 (taken without regard to the covering used, on the assumption that in most cases that covering reasonably best fitted to the duty had been found) indicates clearly a longer minimum, mean, and maximum life in cyanide pulps (21, 60 to 90, and 360 da. respectively) than in flotation concentrates (30 da. mean); no material difference in life appears with different flotation concentrates, although a mean of somewhat over 30 da. is indicated for bulk concentrate; a definitely shorter mean life is indicated for disk-type (about 25 da.) than for the drum types (about 60 da.), owing, probably, to greater bellying of cloth against the scrapers.

The end of satisfactory life is reached when the cloth no longer gives the desired product, irrespective of its physical condition, and acid or other washing will not restore it.

Changing cloth on outside-drum machines involves removal of old cloth, cleaning channels, placing new cloth, and securing it. The new cloth is first wound on, stretched smooth, and secured by tacks. The drum drive is changed to winding speed (about 1 r.p.m. on modern machines). The wire is threaded from a braked reel through a lead die that travels on a sprocket-driven screw at about the level of and parallel to the drum axis along the back (upcoming side) of the tank. One end of the wire is fastened securely at one end of the drum; whereupon, when the drum is started, the wire is led on by the die, suitably spaced according to the speed of the die shaft, at a tension determined by the brake on the reel. A wire-wound cover can be removed and replaced, and the filter put into operation again in 4 hr., even on a large filter, with good planning and efficient labor, but the normal good performance is nearer 4 man-shifts, using 1- to 1 1/2-in. wire spacing; if the old wire spacings of 1/2 to 3/4 in. are used, winding time will usually be more than doubled. Winding devices with two lead dies, permitting simultaneous winding of two wires, are available for large filters. Calked covers can be installed more quickly than wire-wound. Price of a good twill cover for a 14×14-ft. drum (1938) was $60 to $70; wire, $3 to $4. Covers on disk filters are mounted on the sectors after removal of the frames from the disk.

Cost of continuous vacuum filtration depends upon the filterability of the pulp and upon the tonnage treated. Detailed preliminary estimates are practically impossible. Attendance requirements are low and attention to the filter is normally only part of one man's work, even in the largest plants. Thus at NORANDA attendance for 5 filters was reported as 0.49 man-shift; at AVALOS, 0.5 man-shift for 2 filters; at MUFULIRA, 0.66 man-shift for 2 filters; at CLIMAX one operator per shift attends 3 filters, 3 thickeners and 3 driers; at COMBINED METALS REDUCTION one man per shift attends 4 filters and 4 thickeners with the associated pumps; and at FALCONBRIDGE one man per shift operates 2 filters and 3 thickeners. Power consumption is the large item; a basis for estimate is given in Table 2 taken with the accompanying text and the performance tables (3 to 7). Maintenance, primarily renewal of covering, is very small (see *Changing cloth*, above). Over-all costs reported range from 1.5 to 2.5¢ per ton filtered at HOLLINGER and MADSEN RED LAKE on relatively large tonnages of easily filterable material; 3.5 to 5¢ per ton is about the range for medium tonnages of easy material or for large tonnages of material difficult by reason of fineness or mineralogical or other character; in small plants the cost will be 5 to 15¢ per ton under favorable circumstances, and may more than double if conditions are unfavorable.

First cost of continuous filters (1938 basis) ranged from $16 or $18 per sq. ft. of filter area for small simple dewatering filters, built of wood, steel, and cast iron, to $10 or $12 for the larger sizes. Special designs in wood for acid resistance and designs for caustic pulps ranged from $30 or $40 per sq. ft. for small sizes to about $20 for the large. Filters which require corrosion-resistant alloys or rubber-covered surfaces are highly special and cost rises correspondingly.

5. SAND FILTERS

Caldecott sand table is a revolving annulus about 25 ft. outside diameter by 3 ft. wide with horizontal porous top over suitable vacuum compartments. It is run at about 20 f.p.m. peripheral speed with a vacuum of 5 to 10 in. Thickened sand pulp from diaphragm cones or mechanical classifiers is fed at any given point in the revolution and removed, after filtration, by a diagonal plow just ahead of the feed point. About 0.5 cu. ft. per min. vacuum-pump displacement is required per sq. ft. of filter area.

At SIMMER AND JACK PROPRIETARY MINES, LTD., one such table handled 500 tons quartz sand per 24 hr. and reduced moisture from 30% to 15% (*RMP*). At NEW JERSEY ZINC Co. 6-ft. tables with 21 sq. ft. of filtering area treat 6 t.p.h. of solid, of which 98.5% is >100-m. Feed contains 26% water and product about 13%. The layer of solid on the filter is about 3 1/2 in. thick. The table makes 1 1/8 r.p.m.; vacuum is 5 1/2 in. Hg; hose-duck covering has a life of 80 da.

Rotary hopper dewaterer is essentially a drum-vacuum filter with the sides of the filtering compartments extended beyond the filtering surface to form truncated-wedge hoppers with radial sides, into which granular materials are flowed and retained on the drum. The hoppers may be from a few inches to 18 in. deep. They are fed by overhead chutes on the upcoming side at a point 15 or 20° from the zenith, and discharge by gravity, aided by compressed air if necessary. A much larger inward air flow is usually provided for than is possible in the usual drum filter.

The usual SIZE of the unit is 200 to 300 sq. ft. of filtering surface. FEED should not, in general, contain more than 20 to 25% water unless special arrangements are made to handle larger volumes. FILTERED SANDS of normal sp. gr. contain 5 to 12 or 15% water, using atmospheric air (see below for use of heated air). CAPACITY ranges from 1 to 6 tons per sq. ft. per 24 hr. on slime-free pulps.

At NEW JERSEY ZINC Co. a 6×?-ft. machine covered with Monel-metal cloth filtered 3.2 tons per 24 hr. of a feed 85% >100-m. containing 43% moisture, making a product containing 0.45% water by using air heated to 600° F. Speed was 1.2 min. per rev.; vacuum, 3 3/4 in. Hg, produced by a 20×24-in. Wilbraham-Greene exhauster; cloth life was 21 da.

Filter tanks are rectangular or cylindrical in shape, fitted with porous false bottoms, through which liquid passes by gravity, aided by vacuum toward the end of the draining period, if desired. They are used for sand-leaching in cyanide and copper-leaching plants and for more rapid and complete dewatering of granular materials generally than can be effected by simple draining (see Sec. 15, Art. 2). The filter bottom must be supported on a gridlike frame sufficiently close spaced to prevent harmful deformation of the filtering medium, which usually consists of a filter cloth laid over cocoa-matting or the like. A second grid is usually placed above the filter cloth to protect it when the filtered charge is shoveled out. Shoveling may be manual, or a mechanical shovel of the orange-peel or clamshell type may be used; at CHUQUICAMATA a clamshell operated from a traveling bridge over the vats is employed.

In the BLAISDELL SYSTEM the tank is circular with a central bottom-discharge opening about 12 in. diameter under which a belt conveyor runs. The discharge hole is closed during filling by a downward-tapering hollow steel-plate plug extending to the top of the tank. When this is removed it leaves a steeply conical hole through the charge to which the filtered material is scraped by a revolving plow arm carrying a plurality of disk plows. A series of tanks is served by one plow mechanism.

At SHATTUCK ARIZONA (*110 J 761*) gravity concentrate containing 21% water was drained in concrete tanks with sand-filter bottom to a product containing 10% water.

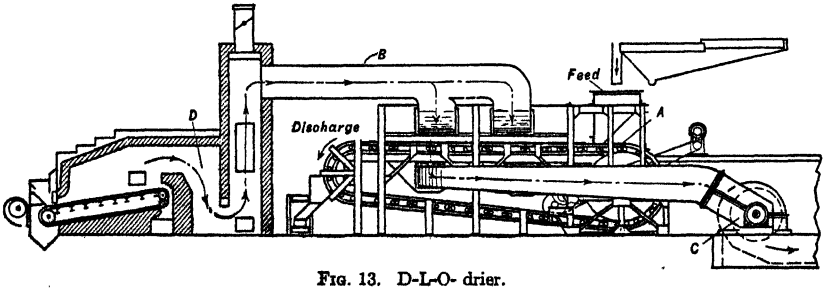

FIG. 13. D-L-O- drier.

D-L-O drier (Fig. 13), for granular material, consists of an apron conveyor *A*, with perforate carrying surface, so mounted under air hood *B* and over a conduit leading to fan *C* that hot gases from furnace *D* pass down through a bed of porous material on apron *A*

while under the downlegs of *B*, thus displacing and evaporating moisture. Essentially the apparatus is a Dwight-Lloyd sintering machine adapted to vacuum filtration with hot air.

At FRIAR TUCK mine, Linton, Ind. (*Bul. Oliver United Filters*), <3/4-in. bituminous screenings was dried from 15% water to 4 1/2% water at the rate of 70 t.p.h. with a consumption of 15 lb. coal fuel and 0.55 hp-hr. per ton of coal dried. The apron was 4 ft. wide and extended 20 ft. under the air hood; it ran at 40 to 50 f.p.m.; bed was 3 1/2 to 4 in. deep; temperature of inlet air was 400 to 700° F., and of exhaust air 100 to 120° F; volume was 200 to 400 cu. ft. per min. per sq. ft. of active bed (80 sq. ft.). Cost reported was 3¢ per ton for operation, 5.5¢ per ton total.

6. PRESSURE FILTERS

These are of two general types: (*a*) plate-and-frame presses and (*b*) pressure tanks. The first type is widely used in the chemical industry but has only a restricted use in milling for clarifying turbid pregnant-solution overflows from thickener tanks. The second type has been used to some extent on cyanide pulps.

There are many pressure filters in use for collecting gold and silver precipitate in cyanide plants. In recent years, this duty has been entrusted to a SOCK FILTER; the solution and precipitate are pumped into the several tubular socks, which retain the precipitate while the solution passes through the cloth-covered walls.

Plate-and-frame filter. A typical form is shown in Fig. 14. The essential parts are a framework consisting of two uprights *a* and two parallel tie-rods *b*, a fixed head *c*, a movable head *d*, and a plurality of plates *e* alternating with frames *f*. Plates are of cast iron, suitably perforated with ports *g* and slightly recessed at the center as shown. The recessed portions are grooved to allow passages for solution behind the filter cloth. Frames are similar to plates with the recessed portion removed. Both are practically square in the section at right angles to the plane of the drawing. Plates and frames have outside lugs which rest loosely on rods *b* when the press is open and they may be lifted out separately. When the press is being assembled for operation, filter cloths are draped over the plates, perforated to correspond with the opening *g*, are set on rods *b* alternating with the frames, and when the desired number are in place the movable head is pushed forward by power screw *h* until all joints are made tight by reason of the filter cloths serving as packing between the machined faces of plates and frames. Holes *g* in plates and frames, now registering, form a passage for feed pulp which is pumped in under pressure and passes through openings *i* into the space between the plates. Liquid passes through the cloth and along the faces of the plates to passages *k* which discharge through cocks *l*. When the chambers are filled or nearly filled with cake, wash water may be sent through the press to wash the cakes, finally compressed air or steam to dry them, after which the movable head is run back and cake is dropped out of the chambers one at a time.

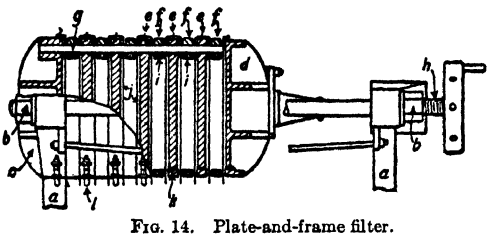

FIG. 14. Plate-and-frame filter.

Merrill press is the only plate-and-frame machine that has had any considerable use for pulp treatment in cyanide work. It has an interior passage along the bottom for discharge of cake and a high-pressure water pipe with jets into the individual compartments for washing spent cake into the discharge passage. Hence it may be discharged without opening.

At DOME 5 @ 4×6-ft. 90-frame Merrill presses are used for single-stage filtration of cyanide pulps, 85% <200-m. Feed pulp contains 49% moisture, and the 4-in. cake 20%, operating at 80° F. at a rate of 14 t.p.h. per machine or 0.0032 t.p.h. per sq. ft. of filter area. No. 8 cotton duck, acid-washed monthly, has a life of 130 da.

Shriver press is one of the best known of this type. When it is required to wash cake, two methods of operation are available. In SOLID FILLING, feed is run into the press until the frames are filled, which is indicated by cessation of filtrate. After an air blow, if this is desired to expel the last of the thus removable filtrate, wash solution is introduced behind the cloths (through the filtrate passages of alternate frames) and flows both ways through the intervening cakes and into the filtrate passages of the adjacent frames. In CENTER FILLING, the flow of feed is stopped before the cakes meet in the frames and wash solution is turned in immediately behind the feed without any release of pressure that might permit

cake to slough. The path of wash is more than halved in this case, permitting quicker washing.

Merrill precipitation press is a plate-and-frame pressure filter with triangular plates and frames and with the feed-inlet pipes carried down to the lower vertices of the frames so that the rising currents of feed pulp therein keep the solids in suspension. It is used almost to the exclusion of all other forms in filtering zinc-dust precipitates in cyanidation.

Sizes. Plate-and-frame presses are rated by the size and number of plates. The usual sizes are 18×18-in., 24×24-in., 30×30-in., and 36×36-in. with 25 to 50 plates per press. Pressures depend on the filtering character of the material. They usually start at a low figure, say 5 to 10 lb. per sq. in., and finish at 50 to 60 lb. High initial pressure clogs the cloths and makes the initial layer of solid too compact; high final pressures are necessary to force liquid through the thick cakes.

Design of plates and frames is highly various. Complexity and number of ports depend on the number and kind of washes, whether blowing is to be practiced, and whether both air and steam are to be used. For considerable further detail as to construction and operation of presses see D. R. Sperry, vols. 18 and 19, *CME*.

Centrifugal pumps are the best type for forcing feed pulp into plate-and-frame presses, because pressure is low at the beginning and gradually increases as resistance builds up, and also there is no pulsation to compact cake as by tamping, which effect is distinctly noticeable with reciprocating pumps.

Pressure-tank filters are of several varieties, of which the Kelly and Burt are best known in milling work. The former has had considerable use in cyanide work and some use in concentrate filtration; the latter in cyanide work. At present neither is used in ore treatment, but the Kelly is rather widely used in petroleum refining and other high- or low-temperature, high-pressure work, while the Burt has been adopted for the hot corrosive liquors in electrolytic-zinc work.

Kelly pressure filter (Fig. 15) consists of a basket *a* of filter leaves, carried on a frame *b* that can be slid in or out of a pressure tank *c*. The tank is inclined so that gravity aids egress of the loaded basket. One end of the movable frame forms the closing head *d* for the pressure tank. Each filter leaf consists of a bag or slip carried on a rectangular pipe frame. Collapse of the covers under pressure is prevented by spacers of wood, wire cloth, or coarse fiber held between the walls. The lower pipes of the frame are perforated within the slips and are extended outside the slip covers through the movable head and terminate in cocks *e*. When the tank is closed, pulp is introduced under pressure, filtrate passes through the canvas and out through cocks *e* while a cake of retained solid builds up on the leaves. When sufficient cake has built up, judged by the pressure on the gage and the rate of flow of filtrate, air is introduced to displace the remaining pulp through drain pipe *g* and to maintain pressure within the tank and hold the cakes in place, then water or dilute solution may be pumped through for washing or air or steam for drying. Finally the leaves are run out and cake forced off by steam or compressed air introduced within the covers through pipes connecting with header *f*. Gravity pressure may be used instead of pumps, if sufficient head is available.

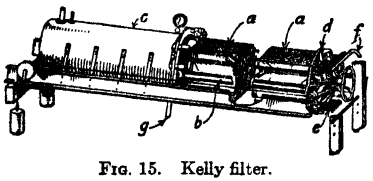

FIG. 15. Kelly filter.

Sweetland filter is similar to the Kelly except that the leaves are transverse and stationary, the tank is jointed along a cylindrical element, and the bottom swung open for discharging cake. It is unimportant in ore treatment.

Burt revolving filter (Fig. 16) consists of a steel-plate cylinder *a* similar to a tube mill or rotary kiln, one end supported by a hollow trunnion *b*, the other on a tire and rollers *c*. The cylinder is closed by hydraulically operated toggles *d*. The interior of the shell is lined with filter mats bolted on. The whole is revolved about 15 r.p.h. by means of gear *e*. Feed is introduced through feed valve *f* until a proper charge has entered, when the air pressure is turned on. Filtrate is forced through filter mats and out through holes in the shell. Wash liquid is then introduced, as desired. Finally the closing head is withdrawn and the charge is tumbled out, sluicing water being used if necessary.

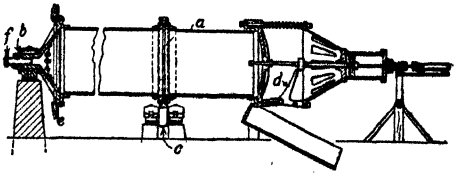

FIG. 16. Burt revolving filter.

7. VACUUM-LEAF FILTERS

Moore filter (Fig. 17) consists of a basket *a* formed by a plurality of individual filter leaves *b*, all suspended from a traveling crane over a compartmented tank *c*. Leaf (Fig. 18) consists of a canvas bag *a* slipped over a rectangular pipe frame *b* and stitched between wooden separating strips *c*. The bottom pipe of the frame is perforated and is connected to header *d* and thence to a vacuum pump. In operation one of the tank compartments is

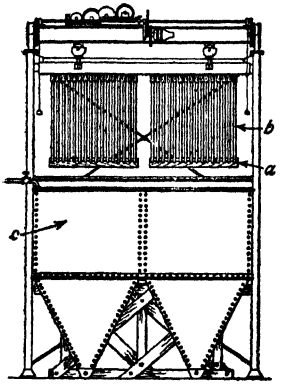

FIG. 17. Moore filter.

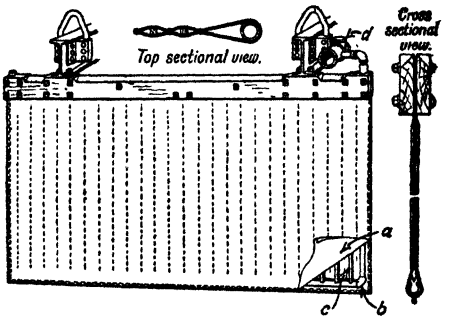

FIG. 18. Detail of Moore filter leaf.

filled with pulp and the filter basket is lowered therein and allowed to remain under vacuum until a cake of the desired thickness, usually 1 to 2 in., has built up. The basket is then lifted to an adjoining compartment and immersed in wash liquid and finally, after washing in one or more compartments, as desired, is transferred over a discharging hopper, where the cake is blown off by compressed air admitted inside the filter leaves.

Butters filter is similar except that the filter basket is stationary in one tank, into which are pumped in succession feed pulp and wash liquids. Finally the cake is blown off into the same tank and flushed away. Cake in this type of filter must be at least 0.5 in. thick to insure clean discharge.

Performance of Butters and Moore filters on cyanide pulps is given in Table 8.

Table 8. Performance of Butters and Moore filters handling cyanide pulps (1925) *a*

Filter	Butters	Butters	Moore
Plant	Cobalt Reduction	Nipissing	Hollinger
Size, mesh	All <200, 97% <200	All <100, 80% <200	All <100, 96.5% <200
Feed *L* : *S*	2 : 1	1.5 : 1	2 : 1
Per cent. of water in cake	25	25–28	28–29
Solution in feed, per ton of solution	5 oz. Ag	5 oz. Ag	$4.50 Au
Barren wash, per ton of solid	2 : 1	2 : 1	1.25 : 1
Assay of solution in cake after wash	0.18 oz. Ag	0.1 oz. Ag	$0.009 Au
Water wash per ton of solid	*Nil*	5 : 1	4 : 1
Total filter area, square feet	4,300	4,300	24,000
Pounds of dry slime per square foot per 24 hr.	116	116	60
Cost per ton for power	.....	$0.03	$0.0083
Labor	.....	0.08	0.0584
Supplies	.....	0.04	0.032
Miscellaneous items	.....	0.01	.....
Total	$0.15	$0.16	$0.0987
Cycle min., Building cake	120	60–75	40
Barren wash	90	90	30
Water wash	.....	20	10
Discharge	45	45	30–40
Total	255	215–230	110–120

a These plants have either ceased operation or are now using continuous-vacuum filters. Very few filters of this type are now (1943) used in cyanide work.

8. CENTRIFUGAL FILTERS

Centrifugal filters are essentially the familiar basket centrifuge of the chemical laboratory adapted to large-scale continuous operation. They are used to dewater granular materials only, *e.g.*, to dry fine granular bituminous coal as an alternative to gravity draining.

Carpenter centrifugal filter (Fig. 19) consists essentially of the conical step screen *a*, mounted on vertical shaft *b* within an enclosure comprising frame *c* with annular launder *d* and conduit *e* for leading away filtrate, feed hopper *f*, and hopper *g* for filtered and dewatered solid. The conical shape of the filter basket causes the filter pressure to increase as the water content decreases with travel toward the bottom. Usual peripheral speed at

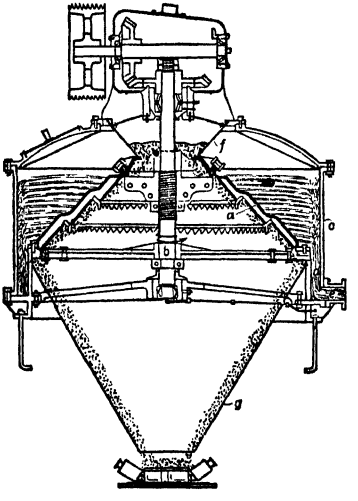

FIG. 19. Carpenter centrifugal filter.

the lower edge of the cone is 7,500 f.p.m. The machine is used for fine ($<5/16$-in.) bituminous slack; it is claimed to make a discharge containing <7% moisture from a feed carrying 30% moisture. Size: 78-in. rotor diameter; capacity, 40 t.p.h. on $<3/8$-in. coal 40-hp. motor.

At PITTSBURG COAL CO. (*40 CA 407, 458*) it was found that the machine tended to break >4-m. coal: that the filtered coal was lower in ash and sulphur than the feed; but that the reduction was effected at the expense of the percentage of >48-m. material.

Cost of centrifugal coal drying is said to be less than $0.02 per ton (*23 CA 784*).

9. COMPARISON OF FILTERS

Continuous filters have the surpassing advantage of continuous operation, with consequent low attendance charge and non-necessity for provision for storage of thickened feed pulp or alternative intermittent operation of thickeners. They are and should be used whenever a cake of $1/4$ in. upward in thickness can be built in 2 to 4 min. under the vacuum available, and when sufficient washing can be effected. Intermittent filters of both vacuum and pressure types have the advantage of lengthy and independent cake-making and washing periods, they can wash more thoroughly and with less water than the continuous machines, and they have greater filtering area per unit of floor space. Disadvantages are the intermittent operation, invisibility of cake during making and washing, and impossibility of applying mechanical preventives for cracking. Pressure filters are better than vacuum when the cake has low porosity, but the cake is less uniform and consequently not equally washed, wear on filter cloth is greater than in vacuum filters, and, in those pressure filters in which pulp is introduced by pump, the high wear on the pump is a charge against filtration. Porous-bottom tanks, filter tables, and rotary dewaterers can be used only on highly permeable granular pulps. Centrifugal filters are used only in drying granular materials, notably bituminous coal.

SECTION 17

DRYING

REVISED BY

FRANCIS E. FINCH, FORMERLY

HEATING ENGINEER, HARDINGE CO.

ART.	PAGE	ART.	PAGE
1. Principles of drying	01	4. Miscellaneous driers	12
2. Hearth drier	04	5. Operation of driers	13
3. Shaft driers	07	6. Design of driers	16

DRYING is the process of removing water from solid or semifluid materials by vaporization, as opposed to mechanical dewatering such as by draining, decantation, pressing, or centrifuging. Drying is employed in mill operations (1) to save freight charges where the material has to be shipped long distances; (2) to facilitate handling in cars, bins, conveyors, feeders, etc.; (3) to increase values where ores or cencentrates are sold at a sliding value per weight unit; (4) to increase capacity of and/or reduce fuel or power consumption in nodulizers, roasters, and electric furnaces; (5) to increase efficiency of dry processes such as screening, air separation, and electrostatic separation.

1. PRINCIPLES

Wetness of a mass of comminuted mineral is expressed numerically as the percentage of its wet weight that is lost when the mass is heated to some temperature a few degrees above the boiling point of water for some specified time (see Sec. 19, Art. 4). The weight lost is normally evaporated water. The time required for the evaporation is dependent upon the way in which the water is distributed in the mass. SURFACE WATER is visible water on the surface. INTERNAL WATER is water within the pores of the mass. THIN-FILM WATER (ADSORBED WATER) is water on either the outer or the internal surface of a particle in the form of an invisible film, a few molecules thick at the most, held tenaciously by molecular attraction between the solid and water. Surface water and internal water are relative terms when applied to comminuted material in that they describe the position and state of the water not only with respect to the solids but also with respect to the adjacent gaseous phase. Thus for an individual wet particle surrounded by gas, surface water is the visible water between the solid surface and the gas, and internal water is the water in the pores of the particle. But for a mass of wet sand in a pan, surface water is only the visible water above the general surface of the mass, and internal water is that in the interparticle spaces plus that within the pores of the individual particles. The importance of the distinctions lies in the fact that evaporation rates for the three kinds of water are markedly different.

Evaporation is the change from liquid to gaseous state which a liquid undergoes when the vapor pressure of the liquid exceeds the partial pressure of the vapor of that liquid in the gaseous phase in contact with it. The VAPOR PRESSURE of a liquid is that pressure which the vapor of the liquid exerts, at equilibrium, on the walls of a vessel containing only the pure liquid and its vapor. The PARTIAL PRESSURE of a vapor in a space containing other gas is that part of the total pressure in the space which is exerted by the vapor; it is directly proportional to the mol fraction or volumetric fraction of the vapor present. At equilibrium the vapor pressure of a liquid is equal to the partial pressure of its vapor in the surrounding space; the surrounding space is then said to be SATURATED with the vapor. The vapor pressure of any liquid increases with rise in temperature; the relationship for water is shown in Fig. 1.

Rate of evaporation from a mass of wet solid depends upon (*a*) the porosity and, to a minor extent, other physical characteristics of the individual particles; (*b*) the state of wetness of the solid mass, primarily the ratio of surface water to internal water; (*c*) the temperature, both that at the surface and that within the body of the mass; (*d*) the pressure; (*e*) the capacity of the adjacent gas phase to take up and hold water; (*f*) the relative motion of the solid and gas phases; (*g*) the method of heating.

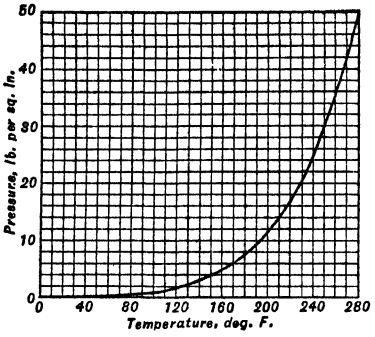

FIG. 1. Vapor pressure of water.

Solid. The important properties of the solid material from the standpoint of drying it are its porosity, specific heat, heat conductivity, and, less frequently, the chemical nature of its surface. Porosity determines the state of wetness (see below). SPECIFIC HEAT determines the relative temperature rise that can be effected by a given quantity of heat input. Specific heats of most nonmetallic minerals fall in the range 0.20 to 0.25; those of sulphide minerals are much lower. The specific heat, s, of any substance can be estimated generally within 10% by Kopp's law, which states that $s = \Sigma na/M$ where a is the atomic heat of an individual atom, n is the number of such atoms in the molecule, and M is the molecular weight. The atomic heats of the elements found in solid compounds are: B = 2.7, C = 1.8, F = 5.4, H = 2.3, O = 4.0, P = 5.4, Si = 3.8, all others 6.2. Thus for galena $s = (6.2 + 6.2)/(207 + 32) = 0.051$ (0.047 experimentally); and for calcium carbonate $s = (6.2 + 1.8 + 3 \times 4)/(40 + 12 + 3 \times 16) = 0.20$ (0.21 experimentally). HEAT CONDUCTIVITY is a measure of the relative rates at which heat flows from the exterior to the interior of a drying mass. Conductivities for some familiar materials at ordinary temperatures are: Air, 0.000057; brick, 0.0015; chalk, 0.002; granite, 0.0045 to 0.0050; graphite, 0.012; gypsum, 0.003; marble, 0.0071; mica, 0.0018; quartz, 0.03 to 0.16 according to crystallographic direction; sandstone, 0.0055; dry sand, 0.00093; slate, 0.0047; soil (dry), 0.00033; water, 0.0014. Conductivities of the metals are of the order of 0.1 to 1.0, and those of the metallic sulphide and oxide minerals are correspondingly higher than those of the nonmetallics. Chemical nature of surface is important in determining the attractive forces of the solid for water molecules. So far as knowledge of materials dried in ore-dressing is concerned, surface nature is important only as to flotation concentrates, and to certain other minerals such as talc that take on hydrocarbon coatings (Sec. 12, Art. 3) with extreme ease. The effect of these coatings on drying is discussed in the paragraph ***Drying curve*** below.

State of wetness. It has been found that, in the drying of any solid, the rate of evaporation of uncombined water varies according to the quantity of water present and/or its position with respect to the solid mass. Surface water evaporates most readily and, therefore, most rapidly, with a given rate of heat input. Thin-film water evaporates most slowly; the last traces cannot ordinarily be removed except at high temperatures and high vacua. Internal water evaporates at an intermediate rate which, in any given case, depends upon the porosity of the solid mass and the continuity of liquid water in the pores. A diagrammatic representation of these facts is given in Fig. 2.

Constant-rate evaporation. When a solid is so wet that its entire surface is covered by visible liquid, evaporation occurs as from a free surface of liquid, and, with a constant temperature differential, proceeds at a constant rate according to the general evaporation equation $w/\theta = KA(h_s - h_g)$, in which w/θ is the weight of water evaporated per unit of time, h_s is the saturation humidity at the temperature prevailing at the saturated surface, h_g is the absolute humidity of the gas surrounding the evaporating surface, A is the area from which evaporation is occurring, and K is a constant.

Falling-rate evaporation begins as soon as the surface of a solid becomes free of visible water. From this time on evaporation is at a decreasing rate until bone-dryness is achieved. Two factors are involved in the decrease. (*a*) The water in the invisible film at the solid surface is held to the solid by molecular attractions greater than those of water molecules for each other; hence more energy (heat) must be put into the system to release them. (*b*) Internal water in the pores of the solid is in contact with gas that is substantially saturated except as its temperature is raised by increase in temperature of the surrounding solid. The water content of this pore gas can be decreased only by diffusion the length of the gas-filled pore and thence to the surrounding atmosphere—a tremendously slow process. Liquid water may, however, be, and is, moved to the surface by raising the temperature of the solid, whereupon gas and water vapor precipitate from the body of the water onto the solid surfaces, and the resultant bubbles grow, pushing the liquid toward the surface, where it evaporates from a concave surface, relatively slowly as compared with a plane or convex surface, but much more rapidly than from a liquid surface within the solid mass. This process is effective until such time as the internal liquid ceases to be continuous across pore spaces, and the residue becomes drops and films on the walls of these spaces. Then a further drop in rate occurs, limited by gaseous diffusion rates and by film adhesion, as above discussed.

Drying curve. In Fig. 2, from A to B free water covers the surface and, with a constant supply of heat, the water attains a constant equilibrium temperature at which, if the water vapor is removed

from the surface as formed, evaporation proceeds at a constant rate. *B* marks the point at which apparently dry solid breaks through the water film. With respect to the uncovered surface the evaporation rate falls, and, the area of free-water surface being decreased, the evaporation rate for the total area falls, at an increasing rate as the free-water surface decreases, until at *C* free water has disappeared from the surface entirely. From *C* to *D* drying proceeds largely by extrusion followed by evaporation at or near the solid surface, the rate falling rapidly as the continuity of the liquid pore fillings is broken, and the extruding capacity of water evaporated within the general mass decreases for lack of confinement. From *D* to *O* droplet and thin-film evaporation in the pores, with vapor diffusion to the gas-swept surface, prevails, and the rate decreases slowly to very low values.

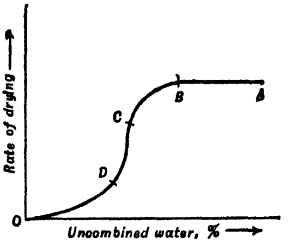

FIG. 2. Drying curve.

The significance of hydrocarbon surface films on flotation concentrates, etc., lies in the fact that air and water vapor precipitate readily from liquid water at such surfaces with a small rise in temperature (see Sec. 12, Art. 11), while without such surface coating the temperature must be raised much higher before gas precipitation occurs. Concentrate is often dried in a mass to prevent the dusting that occurs when it is dropped through a current of hot gas. Under these circumstances the enhanced extrusion from interparticle pores due to precipitated gas is important in accelerating the drying rate.

Temperature affects evaporation rate because of its effect on both vapor pressure (see Fig. 1) and the moisture-carrying capacity of the gas phase in contact with the evaporating surface (see Table 1). Further, the higher the temperature of the heating medium (solid surface or gas) the greater the temperature differential between surface and interior of the mass of solid; since conductivity varies as this temperature differential, with high temperature the internal water is heated and driven out more quickly.

Pressure. Reduction in the pressure on an evaporating surface reduces the partial pressure of the vapor of the evaporating liquid in the gas phase without affecting the vapor pressure of the liquid. Since rate of evaporation is proportional to the difference between these quantities, it is thereby increased. This phenomenon is utilized in evaporating substances that would be harmed by high temperatures; it is more expensive than heating and is not, therefore, used with ores and concentrates.

Gas velocity. Transport of moisture away from the evaporating surface is essential to maintenance of a high difference $h_s - h_g$ in the evaporation-rate equation. Water molecules leaving an evaporating surface must diffuse through the gas film, statistically stationary, in contact with the surface. At constant temperature this diffusion rate is dependent on the thickness of the gas film, which decreases with increase in gas velocity across the solid surface. Furthermore, the shorter the time that any volume of gas is near an evaporating surface the less vapor it picks up and hence the lower its absolute humidity (h_g). On both scores, therefore, the higher the gas velocity past the wet surface the higher the drying rate. Sherwood (*Perry*) proposes the formula $G = 0.021V^{0.8}$ to represent the relationship between evaporation rate and gas velocity during the constant-rate period. G is lb. of water evaporated per hr. per sq. ft. of free-water surface per mm. of difference between the vapor pressure of the evaporating water and the partial pressure of water in the surrounding gas, and V is the mass velocity of the gas (lb. per sec. per sq. ft. of evaporating surface); the limits of applicability are given as 180 to 1,200 f.p.m. gas velocity.

Heating. The minimum quantity of heat necessary to be supplied for evaporation of liquid from a solid mass is the sum of the latent heat of the liquid evaporated (see Table 1) and the sensible heat required to raise the temperature of the system to the temperature of evaporation. In any practical operation an additional quantity of heat, amounting to 50 to 100% or more of the minimum, must be supplied to make up for heat losses (see Art. 5).

Heat required to raise the temperature of the solid is given by the equation $H_s = W_s h_s(t_e - t_i)$, where H_s is the required number of B.t.u., W_s is the weight of solid heated in lb.; h_s is the specific heat of the solid in B.t.u. per lb. per deg. F.; t_e is the exit and t_i the inlet temperature in deg. F.

Heat required to raise the temperature of the water is obtained by the equation $H_w = W_w(t_e - t_i)$, where H_w is the required quantity of heat in B.t.u., and W_w = total weight of water entering. The specific heat of water is practically 1.0, so it does not need to appear in the equation.

Heat required for evaporation (H_e) is the product of the weight of water evaporated (W_e) and the latent heat of evaporation of water at the outlet temperature (h_l). $H_e = W_e h_l$. See Table 1.

Heat transfer occurs both by conduction and by radiation. The fundamental equation for conduction in solids is the integrated form of Newton's equation, $Q/\theta = kA(\Delta T)/L$, where Q is quantity of heat, θ is time, ΔT is the temperature difference, A is the area over which conduction is taking place, measured at right angles to the direction of flow; L is the length of path, and k is a coefficient of conductivity which varies markedly for different materials and is different at different temperatures. The Stefan equation for transfer by radiation is $Q_n/\theta = A(T_1^4 - T_2^4)$ in which Q_n is the net heat loss of the hotter body, and T_1 and T_2 are the absolute temperatures of the hotter and cooler bodies respectively. Data are never available in any particular drying problem for quantitative application of either of these equations. They are useful, however, in that they point

Table 1. Properties
(p = 14.7 lb. per sq.

Temperature, degrees	Pressure in pounds per square inch			Weight in pounds per cubic foot			Ratio, $\frac{\text{vapor}}{\text{air}}$	Ratio, $\frac{\text{air}}{\text{vapor}}$	Specific volume, cubic feet per pound
	Of vapor component	Of air component	Dry air	Of vapor component	Of air component	Of saturated mixture			
32	0.089	14.611	0.0807	0.00031	0.0802	0.0805	0.00379	263.8	3,294
35	0.100	14.600	0.0802	0.00034	0.0797	0.0800	0.00427	234	2,938
40	0.122	14.578	0.0794	0.00041	0.0788	0.0792	0.00520	193	2,438
45	0.147	14.553	0.0786	0.00049	0.0778	0.0783	0.00620	161	2,033
50	0.178	14.522	0.0779	0.00059	0.0769	0.0775	0.00769	130.5	1,702
55	0.214	14.486	0.0771	0.00070	0.0760	0.0767	0.00921	108.5	1,430
60	0.254	14.446	0.0763	0.00082	0.0751	0.0759	0.01092	91.6	1,208
65	0.304	14.396	0.0756	0.00097	0.0741	0.0751	0.01310	76.3	1,024
70	0.360	14.340	0.0749	0.00114	0.0731	0.0742	0.0156	64.0	871
75	0.427	14.276	0.0742	0.00134	0.0721	0.0734	0.0186	53.8	743
80	0.503	14.197	0.0735	0.00156	0.0711	0.0726	0.0219	45.6	636.8
85	0.592	14.108	0.0728	0.00182	0.0700	0.0718	0.0260	38.5	545.9
90	0.693	14.007	0.0723	0.00212	0.0690	0.0711	0.0306	32.7	469.3
95	0.809	13.891	0.0715	0.00245	0.0676	0.0701	0.0362	27.6	405.0
100	0.942	13.758	0.0709	0.00283	0.0662	0.0692	0.0426	23.4	305.8
105	1.095	13.605	0.0702	0.00325	0.0650	0.0683	0.0500	20.0	304.7
110	1.267	13.433	0.0696	0.00373	0.0637	0.0674	0.0586	17.1	265.5
115	1.462	13.238	0.0690	0.00426	0.0622	0.0665	0.0684	14.6	231.9
120	1.685	13.015	0.0684	0.00488	0.0606	0.0655	0.0804	12.43	203.1
125	1.932	12.768	0.0678	0.00544	0.0590	0.0645	0.0939	10.65	178.4
130	2.215	12.485	0.0672	0.00630	0.0572	0.0635	0.1101	9.08	157.1
135	2.542	12.158	0.0667	0.00714	0.0552	0.0624	0.1291	7.73	138.7
140	2.879	11.821	0.0661	0.00806	0.0531	0.0613	0.152	6.58	122.8
145	3.273	11.427	0.0655	0.00909	0.0511	0.0601	0.178	5.62	109.0
150	3.708	10.992	0.0650	0.01022	0.0487	0.0589	0.210	4.77	96.9
155	4.193	10.507	0.0644	0.01145	0.0462	0.0576	0.248	4.03	86.4
160	4.731	9.969	0.0639	0.01333	0.0435	0.0568	0.305	3.28	77.2
165	5.327	9.373	0.0634	0.01432	0.0405	0.0549	0.353	2.83	69.1
170	5.985	8.715	0.0629	0.01602	0.0374	0.0534	0.428	2.33	62.0
175	6.708	7.992	0.0624	0.01744	0.0340	0.0518	0.521	1.92	55.7
180	7.511	7.198	0.0619	0.01970	0.0304	0.0501	0.650	1.54	50.15
185	8.375	6.325	0.0614	0.02181	0.0265	0.0483	0.823	1.215	45.25
190	9.335	5.365	0.0609	0.02411	0.0223	0.0464	1.079	0.927	40.91
195	10.385	4.315	0.0605	0.02662	0.0178	0.0444	1.495	0.669	37.04
200	11.526	3.174	0.0600	0.02933	0.0130	0.0423	2.25	0.443	33.60
205	12.770	1.930	0.0596	0.03225	0.0078	0.0401	4.11	0.243	30.53
210	14.126	0.574	0.0593	0.03543	0.0023	0.0377	15.45	0.0647	27.80
212	14.7	0.000	0.0592	0.0368	0.0000	0.0368	Infinite	0.000	26.79

out that whether transfer is by radiation or conduction, the rate of flow of heat (Q/θ) increases with increase in the difference in temperature between the heating medium and the solid to be dried, and that the rate at which a particle becomes heated through is an inverse function of its diameter.

TYPES OF DRIERS

Driers are of a variety of types. They have been classified loosely, and on different bases, as (*a*) hearth-type, (*b*) shaft-type, (*c*) film-type, (*d*) spray-type, etc.

2. HEARTH DRIER

This type is characterized by the fact that the material to be dried is supported on and receives its principal heat supply through a floor or hearth. The earliest form was the drying floor. Modern forms are typified by the Lowden type (*post*). Wedge and Herreshoff roasters normally utilize the upper hearths for pre-drying. The simplest drying operation consists in spreading material on floors, protected from the elements but

of saturated air
in. = 30 in. Hg)

Heat content in B.t.u. per cubic ft. from water at 32° F.			Heat in vapor, B.t.u. per pound	Ratio, Dry air at 62° F. / Saturated mixture		Initial temperature (F.) of dry air required to evaporate 1 lb. of water in saturated mixture, degrees	Latent heat of evaporation at wet-bulb temperature
Vapor	Air	Saturated mixture		By weight	By volume		
0.338	0.000	0.338	1,091	258.8	3,401	49.7	1,073.4
0.371	0.057	0.428	1,092	234.4	3,080	54.6	1,071.7
0.448	0.150	0.598	1,094	192.2	2,526	63.8	1,068.9
0.536	0.240	0.777	1,095	158.9	2,088	74.0	1,066.1
0.647	0.329	0.976	1,097	130.4	1,714	85.4	1,063.3
0.768	0.415	1,183	1,098	108.5	1,426	97.6	1,060.6
0.901	0.500	1.401	1,100	91.6	1,203	110.5	1,058.8
1.068	0.581	1.649	1,101	76.4	1,004	125.6	1,055.0
1.256	0.641	1.897	1,103	66.0	868	140.0	1,052.3
1.479	0.737	2.216	1,104	55.0	723	160.0	1,049.5
1.725	0.811	2.536	1,106	45.6	599	182.0	1,046.7
2.016	0.881	2.897	1,107	38.4	505	206.0	1,044.0
2.351	0.951	3.302	1,109	32.5	427	233.0	1,041.2
2.721	1.013	3.734	1,110	27.6	363	264.0	1,038.4
3.147	1.073	4.220	1,112	23.5	308	299	1,035.6
3.618	1.129	4.747	1,113	20.0	263	344	1,032.8
4.158	1.181	5.339	1,115	17.1	224	385	1,030.0
4.764	1.227	5.991	1,116	14.6	192	436	1,027.2
5.456	1.268	6.724	1,118	12.4	163	499	1,024.4
6.201	1.304	7.505	1,119	10.7	140	567	1,021.6
7.062	1.332	8.394	1,121	9.10	118	667	1,018.8
8.015	1.352	9.367	1,123	7.74	102	745	1,016.0
9.060	1.367	10.43	1,124	6.61	86.8	856	1.013.1
10.23	1.372	11.61	1,126	5.62	73.8	986	1,010.3
11.52	1.366	12.88	1,127	4.77	62.6	1,145	1,007.4
12.92	1.351	14.27	1,129	4.03	53.0	1,332	1,004.5
15.06	1.322	16.39	1,130	3.26	42.8	1,618	1,001.6
16.21	1.282	17.49	1,132	2.83	37.1	1,847	998.7
18.15	1.226	19.38	1,133	2.33	30.7	2,212	995.8
20.13	1.156	21.29	1,135	1.92	25.2	2,665	992.9
22.39	1.068	23.46	1,136	1.54	20.3	3,280	989.9
24.82	0.964	25.78	1,138	1.22	16.0	4,124	986.9
27.47	0.838	28.31	1,139	0.93	12.2	5,368	983.9
30.37	0.690	31.06	1,141	0.67	8.8	7,370	980.9
33.52	0.519	34.02	1,142	0.44	5.8	12,840	977.8
36.89	0.323	37.22	1,144	0.24	3.2	19,985	974.7
40.58	0.098	40.68	1,145	0.065	0.7	.....	971.6
42.21	0.000	42.21	1,146	0.000	0.0	.....	970.4

open to free circulation of air. Under these circumstances drying takes place even with freezing temperature, although very slowly. The rate is increased by turning material over from time to time. This type of drier is used in certain small and crude nonmetallic milling plants, *e.g.*, tripoli, bauxite, etc. It is applicable only where labor is the cheapest commodity entering into the treatment process, tonnage is small, and time is not an important element.

Heated floor was used at TUL MI CHUNG mill (*119 P 814*) for drying flotation concentrate. The floor was of concrete (1 of cement, 2 of washed sand, 4 of 3/4-in. gravel), 2 1/2 in. thick, reinforced with barbed wire laid in 3-in. squares 3/4 in. from the bottom of the slabs. Checkerwork flues underlay the floor. The slope toward the stack end, which was also the loading end, was 1 in. per ft. for the last 3 ft. and 1/4 in. per ft. for the rest of the length. Concentrate was brought in cars from the thickeners, dumped at the stack end, and allowed to drain. Material was then raked by hand toward the fire end, where it arrived dry. Six floors, each 15×40-ft., were needed for 30 to 35 t.p.d. of concentrate 97% <200-m. FUEL CONSUMPTION ranged from 0.1 to 0.2 cord of wood per ton dried, summer and winter respectively, and averaged about 0.14 cord. Cost of drying, sampling, sacking, and weighing was $0.90 per ton with wood at $3.60 per cord and labor at $0.25 per day of 10 hr. At TONOPAH MINING CO. (*91 J 1214*) fine gravity concentrate was drained in an 8-in. layer on sloping (3/8 in. per ft.) plank floors to 15% moisture in 20 hr., then dried to 3.4% on a steel-plate floor. With coal at $13.50 per ton and wood at $9.50 per cord the total cost of drying 4 tons per day was $0.84 per ton.

Mechanical hearth driers comprise troughs of various shapes along which the material to be dried is conveyed by mechanical means while it is being heated. The primary source of heat is by conduction through the trough. When gas is used to heat the trough, it may later be flowed over the material. In some forms the trough is steam jacketed. The conveying means should be and ordinarily is arranged to rabble the material at the same time that it conveys it; usually chain drags or reciprocating rakes are used, but screws or spirally placed blades (logs, Sec. 10, Art. 4) have been employed.

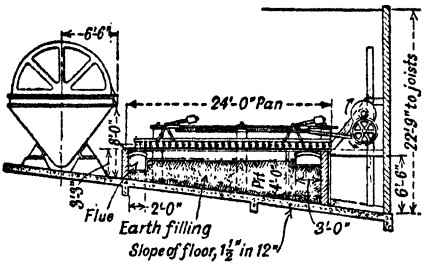

FIG. 3. Lowden drier with Oliver filter.

Lowden drier (Fig. 3) is the best known of the hearth type. It consists of heavy cast-iron plates resting on brick or concrete checkerwork heated by gases of combustion, waste-heat gas, or steam. Feed is introduced at the firing end of the hearth and slowly advanced and rabbled by a series of reciprocating rakes operating on the bell-crank principle (Sec. 8, Art. 2); length of stroke is adjustable, but is less than the distance between the rabbles. Speed is 1 to 3 s.p.m. The hearth may be open or hooded; in the latter case vapor is removed by means of a fan or stack. Hearths are 4, 6, 9, and 12 ft. wide and 24 to 60 ft. long. The machine is recommended by the manufacturer (Colorado Iron Works) for drying very fine materials that would give off excessive dust in other types of driers and for sticky materials that clog other types.

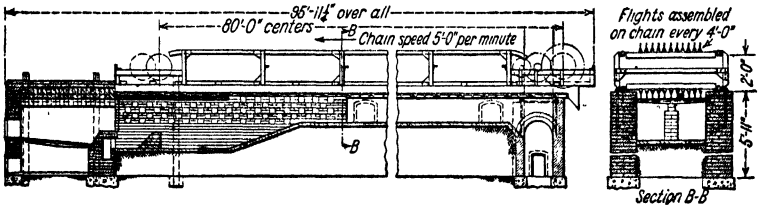

FIG. 4. Hearth drier with chain-drawn rabbles.

Most other designs of hearth driers in use have been designed by the users. C. O. Bartlett & Snow Co. build a chain-drag type (Fig. 4). Trouble is usually encountered with the drag type when drying sticky materials owing to the tendency of the material to adhere to the rabble or to build up on the hearth and allow the rakes to ride over it.

Performances of rabble driers are as given in Table 2.

Table 2. Performances of rabble-hearth driers

Material	Zinc flotation concentrate	Lead flotation concentrate	Copper sludge	Washed plastic kaolin
Size of hearth, sq. ft	360	270	348	810
Wet weight per hr., lb	11,650	9,450	8,100	12,800
Moisture in feed, %	14.5	17.0	24.0	21.5
Moisture in product, %	6.0	8.0	11.5	8.5
Water evaporated per hr., lb	1,063	924	1,144	1,830
Water evaporated per hr. per sq. ft. of hearth, lb	3.0	3.4	3.3	2.3
Fuel per hr	340 lb.	24 gal.	320 lb.	630 lb.
B.t.u. per lb. or gal	11,800	140,000	13,800	12,000
Water evaporated per lb. or gal	3.1 *a*	38.5 *b*	3.6 *a*	2.9 *a*
Total heat in fuel supplied per hr., B.t.u.	4,012,000	3,360,000	4,416,000	7,560,000
Total heat necessary for evaporation per hr., B.t.u.	1,603,175	1,406,160	1,604,430	2,400,200
Thermal efficiency, %	39.9	41.3	36.3	31.7
Horsepower	6.5	7.0	10.0	12.5
Total installed cost, including motors	$10,800.00	$9,000.00	$11,500.00	$16,750.00

a Per lb. *b* Per gal.

Watt reported (*57 A 385*) that Lowden driers require 70 to 120 lb. of coal per ton of lead-flotation concentrate to dry from about 14% to about 6% moisture; and that the usual size allowance is 10 sq. ft. of hearth area per ton of concentrate to be dried per 24 hr. At FEDERAL LEAD Co. Mill No. 4 one 12×24-ft. machine dried 50 t.p.d. of <80-m. flotation-lead concentrate from 15 or 16% moisture to 4 to 6% with a consumption of 2 tons of soft coal. The machine was run at 2 1/2 s.p.m. and consumed about 6 hp. Lost time for tightening rakes, replacing crank pins, and repairing furnace hearth and arch amounted to about 2%. A common set-up, with gravity feed from filter and gravity discharge to a car-loading hopper, is that shown in Fig. 3. At HAYES MILLING Co. (*111 J 909*) a 5×17-ft. Lowden drier, oil-heated, dried 175 tons per month from 35 to 15% water at a cost for fuel of $6.90 per ton of water evaporated. Reynolds (*116 P 745*) gave data on FUEL CONSUMPTION in drying flotation concentrate at three different plants as follows: (1) 56 tons (dry weight) per 24 hr. from 15 or 16% to 4% moisture with 3 1/2 tons of coal; (2) 30 tons (dry weight) per 24 hr. from 15 to 16% to 5% moisture with 1 3/4 tons of coal; (3) 31 tons (dry weight) per 24 hr. from 29% to 13% moisture with 2 tons of coal. At LIBERTY BELL two steam-heated rabble-type hearth driers, with 4×10-ft. drying surface, were used in series to dry 12 tons of 300-m. flotation concentrate per 24 hr. from 20% to 10% moisture; fuel consumption was estimated at 0.5 ton coal per 24 hr. for the two machines.

Evaporation on hearth driers ranges, in general, from 1 to 5 lb. of water per hr. per sq. ft. of hearth; and from 1 to 4 1/2 lb. per lb. of 13,000-B.t.u. coal.

3. SHAFT DRIERS

Shaft driers operate on the principle of showering moist solid material through a current of hot gas moving at 90° to 180° to the stream of falling material. There are two main forms, *viz.*, (*a*) tower driers and (*b*) rotary driers.

Tower drier is, as the name implies, a shaft- or chimney-like structure, ordinarily vertical, connected at the bottom to a furnace or other source of heat. Feed is introduced at the top and flows downward by gravity, usually over baffles; at the bottom it discharges 90° or 180° from the fire box. This type of drier is usually constructed without any moving parts. The walls are built of brick, of concrete lined with brick, or of insulated steel. Baffles are arranged to retard the fall of material; they are usually steel angles, channels, or other shapes so set that material does not build up on them. When steam is used as the source of heat, the steam pipes take the place of, or are additional to, the baffles.

Fig. 5 shows two different forms of tower drier in use at the Franklin mill of NEW JERSEY ZINC Co. The stack is usually laid up of three or four courses of common red brick, bound both ways at about 3-ft. intervals with tie-rods laid in the brickwork, or with buckstays and tie-rods. The sides and arch of the firebox and the first few feet of the stack are lined with one course of fire brick. Racks for T-bar grids are carried on the inner walls or, as at the EMPIRE IRON & STEEL Co. mill (*99 J 560*), carried on independent hollow sectional cast-iron columns, built up like tile pipe, set in the corners of the stack. If shelf baffles are used, they are usually carried on the stack walls and may be made of adjustable slope. At EMPIRE IRON & STEEL Co. the stack was 5 ft. square and 45 ft. 4 in. high, set on a concrete block 10 × 10 × 10 ft. The baffle bars were arranged in 10 sections or groups. The lowest 7 sections consisted of 5 tiers of 5 bars each, the bars in alternate tiers at right angles. The upper surface of the bars (the crossbar of the T) was 6 in. wide and 3/4 in. thick. The bars were set to give 6 in. clear horizontally and 8 in. vertically. In section 8 there were 4 tiers of 4 bars per tier, each bar 9 in. wide and 1 in. thick. This left 7 in. clear between bars horizontally and 10 in. vertically. In section 9 there were 3 tiers of 3 and 4 @ 9-in. bars per tier, leaving 10- and 10 1/2-in. spaces horizontally and 12 in. vertically. In the top or No. 10 section there were 2 tiers with 3 and 4 @ 9-in. bars per tier, leaving the same horizontal spacing as in No. 9 but 15-in. vertical spacing. The web of the bars fitted loosely into the supporting racks. Doors were provided at each section for ease in changing. The firebox was 6 ft. 9 in. × 7 ft. 6 in. with grate for burning No. 2 buckwheat coal under forced draft. Additional air was furnished by a No. 80 American Blower Co.'s steel-plate exhaust fan; it was pre-heated by drawing it over the arch of the furnace, then under the arch, where it joined the gases of combustion. A 30-in.(diam.)×20-ft. stack was provided, having a damper arrangement to cut in the blower or the stack for draft, as necessary. Feed was through a 1 1/8×2 1/2-in. slot and averaged 14% moisture. Average feed rate was 25 t.p.h., maximum 35 t.p.h. Product was substantially dry. At NEW JERSEY ZINC Co. the double-furnace drier shown in Fig. 5 dries 100 t.p.h. of <1-in. feed from 3% moisture to apparent dryness. Fuel consumption is 700 lb. anthracite buckwheat per hour. The air used amounts to 20,000 cu. ft. per min. and the blower draws 30 hp. The single-furnace drier is fed 6 t.p.h. of <10-m. material containing 8% moisture; discharge is substantially dry. Coal consumption is 250 lb. per hr. (anthracite). The blower supplies 5,500 cu. ft. of free air per min. with a consumption of 10 hp. A similar drier at the same plant with a stack 3 ft. 6 in. square and 32 ft. high handles 11 t.p.h. of 6~35-m. feed carrying 10% water and brings it to substantial dryness with a coal consumption of 170 lb. per hr., air consumption of 3,200 cu. ft. per min., and power draft of 15 hp. At the Ogdensburg mill of the same company 20 t.p.h. of <1-in. ore is dried in a stack 3 ft. 6 in. square and 40 ft. high from 10% water to apparent dryness. Fuel consumption (anthracite) is 450 lb. per hr., air consumption 10,000 cu. ft. per min., requiring 10 hp. at the blower motor. In the same mill a double-stack drier, each stack 3 ft. square and 38 ft. high, dries 3 t.p.h. of 8~35-m. feed from 15% moisture to apparent dryness. Fuel consumption is 200 lb. per hr. of powdered bituminous coal, air consumption is 8,000 cu. ft. per min., and power consumption about 10 hp. In all of these New Jersey Zinc Co. driers the attempt is to keep the exit gases down to 200° F. At WITHERBEE-SHERMAN, Mill No. 3, <3/4-in. roll product (mag-

netite gneiss) was dried from 3% to 0.2% moisture at the rate of 50 t.p.h. in a stack 4 ft. 9 in. square × 50 ft. high. Coal consumption was given as 1 ton of anthracite (birdseye) per 24 hr., but this is undoubtedly below the actual consumption for the reduction in moisture stated.

The DISADVANTAGE of the tower drier is the difficulty of regulating the rate of fall and, consequently, the amount of drying. In driers with adjustable-shelf baffles some regulation may be effected by

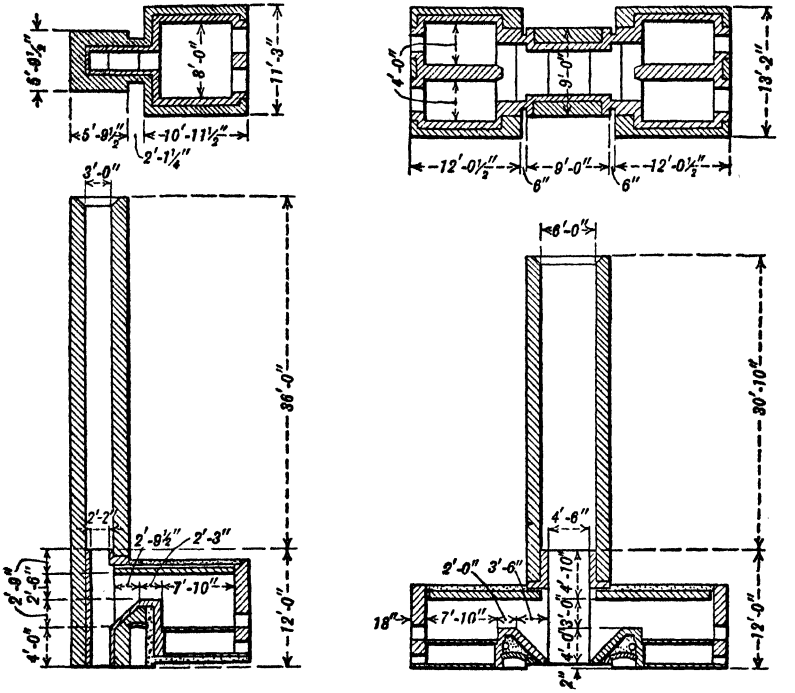

FIG. 5. Tower driers at New Jersey Zinc Co.

changing the inclination of the shelves, but not much is to be gained here because, if the shelves are made flat enough to retard flow materially, the wet material sticks and piles up and substantially all drying effect of the shelf surface is lost. Another disadvantage is the large loss in headroom. Hence these driers are used mainly for materials having a small, constant amount of surface moisture only, or when it is desired to reduce surface moisture by a small, constant amount. The ADVANTAGES are simplicity of design and operation. Average evaporation in tower driers is between 3 and 8 lb. of water per lb. of 13,000-B.t.u. coal.

Rotary drier is the commonest form of mechanical drier. It consists essentially of a long cylinder mounted on a slight incline (acute cones and horizontal cylinders with internal spirals are also used), revolved slowly while the material to be dried and the heated gases pass therethrough. Lifting angles on the interior of the shell lift the drying material and drop it substantially at right angles to and through the current of gas, thereby both spreading the material out in a manner favorable to evaporation of the contained moisture and aiding its progress through the shell. Stationary heads with suitable sealing glands at the ends of the cylinder provide for inlet and outlet of solid and heated gas with minimum infiltration from the atmosphere.

Direct-heat cylindrical drier (Fig. 6) is the simplest form. The essential parts are the drying cylinder (*a*), furnace (*b*), exhaust chamber (*c*), and driving mechanism (*d*). Feed

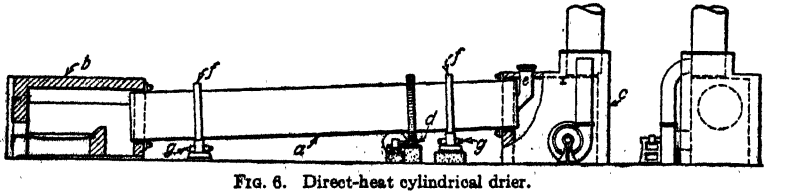

FIG. 6. Direct-heat cylindrical drier.

enters through spout (*e*) and is discharged into a suitable receptacle or conveying mechanism at the other end of the shell. The shell is made of heavy steel plate with riveted joints. Longitudinal lifting angles are riveted to the inner surface. Heavy steel tires (*f*) bolted to the shell ride on hardened-steel rollers (*g*). Various methods are employed to resist end thrust. Fig. 6 shows flanged rollers used at the head end. Fig. 7 shows a more efficient, although more expensive, form with horizontal rollers (*a*) that bear against the sides of the tire. A gear drive is usual, although chain-and-sprocket drive is used on some small, light machines. Coal is the usual fuel, but any fuel may be used. The use of a blower in addition to a stack is wise, since it gives positive control of draft and increases thermal efficiency. The furnace is placed at either end of the shell, as desired. The arrangement shown in Fig. 6 is the usual one, as combustion is not checked by contact of the gases with cold wet material and dust losses are less because the sheet of wet solid at the feed end serves as a sort of filter for the dust-laden gases.

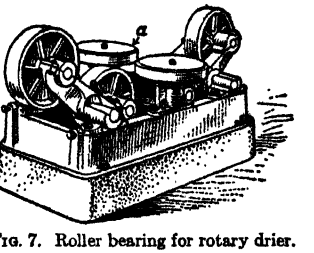

FIG. 7. Roller bearing for rotary drier.

Cylinder sizes range from 2 to 12 ft. diameter and 8 to 160 ft. in length. Usual SPEEDS are 60 to 80 f.p.m. peripheral. POWER required for drier cylinder and fan averages about 10 hp. for a 3×25-ft. machine; 15 hp. for a 4×30-ft., 25 hp. for a 5×35-ft., 35 hp. for 6×40-ft., 50 hp. for 7×50-ft., and 70 hp. for 8×60-ft. (*C. O. Bartlett and Snow.*) Fuel consumption averages about 1 lb. of 13,000-B.t.u. coal per 5 lb. of moisture evaporated (range of 4 to 8 lb.).

Direct-indirect-heat cylindrical drier (SEMI-DIRECT-HEAT) is built either in the brick-enclosed form shown in Fig. 8 or in the double-shell form (Fig. 9). The elements of the shell in Fig. 8 are the same as those in Fig. 6, but the circulation of hot gases is first around

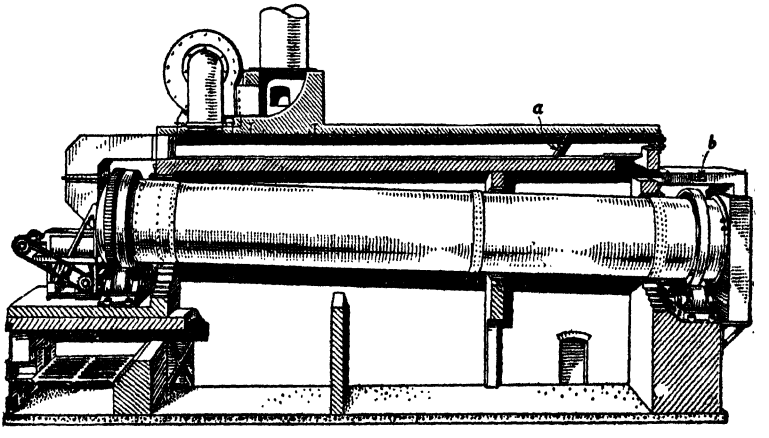

FIG. 8. Brick-enclosed cylindrical drier.

the outside of the shell, then through the shell. Dampers *a* and *b* determine the proportion of gas passing through the shell interior. By closing *b* and opening *a* the machine becomes an indirect-heat drier. Cylinder sizes are the same as those of the preceding machine.

This machine utilizes heat more completely and efficiently than the direct-heat machine, both on account of the enclosure of the shell, which decreases radiation losses, and the longer time that the gases are in contact with surfaces to be heated. Fuel consumption is 1 lb. of 13,000-B.t.u. coal to 6 or 6 1/2 lb. of water evaporated.

Double-shell drier (Fig. 9) is arranged so that hot gas directly from the furnace passes through the inner shell and returns between the two shells, as indicated by the arrows. Feed enters at the furnace end of the outer shell, is lifted by the ribs of the outer shell, showered through the stream of hot gas onto the ribbed outer surface of the inner shell, held for a while in contact with this hot surface, and then showered again through the gas stream onto the outer shell. This cycle is repeated many times in the passage to the

discharge-end head, where the material is finally picked up by buckets on the inner surface of the outer shell, dropped onto the fluted discharge cone *a*, and carried out through the discharge trunnion.

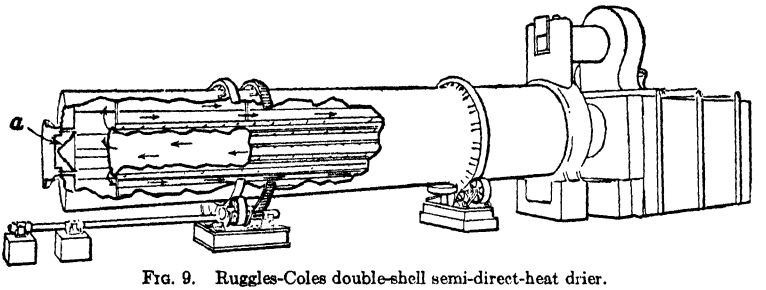

FIG. 9. Ruggles-Coles double-shell semi-direct-heat drier.

Sizes are from 3- to 12-ft. diameter and 10- to 125-ft. lengths. EVAPORATION ranges from 4 to 11 lb of water per lb. of 13,000-B.t.u. coal.

Cylindrical driers in concentrating mills are usually of the direct or direct-indirect type, since discoloration and overheating are of no importance. Their use is ordinarily limited to granular materials, however, on account of the high dust losses with finer feeds.

Rotary louvre drier (Fig. 10) consists of a cylindrical shell *a* with a conical inner space *b* enclosed by louvres *c*; the entire structure is mounted on rollers and is gear driven. A stationary head *d* with suitable seal provides for entry of wet feed and heated gas. The space between the inner face of shell *a* and the outer faces of the louvre plates *c* is divided by radially placed plates *e* into longitudinal flues, open at the head end and along the louvred side, but closed by the discharge-end wall of the cylinder. The hot-gas inlet is so arranged that only those lower flues on the upcoming side that are at any given time under louvre plates covered by the bed of material are in registry with the inlet. The gas

Table 3. Performances

Material dried	Copper conc. *l*	Zinc conc.	Asbestos rock *l*	Pebble phosphate *l*	Silica sand
Type *g*	SS, PF	SS, PF	SS, PF	SS, PF	SS, CF
Size, diam. × length, ft.	5×34	5×35	6 2/3×60	7 1/2×55	4×40
Feed: T.p.h., wet	10.6	7.4	86.4	63	12.2
Moisture, %	9.2	14.5	8.0	13.8	5.7
Temperature, °F.	.....	50	.....	.....	62
Discharge: T.p.h. at final moisture	10	6.6	80	55	11.5
Moisture, %	4.3	3.5	0.7	1.3	0.3
Evaporation: Lb. per hr.	1,100	1,687	12,800	16,000	1,306
Lb. per unit of fuel	8.1	43.1	49.3	82.8	4.4
Fuel: Kind	Coal	Oil	Oil	Oil	Coal
B.t.u. per unit	13,000	138,000	140,000	150,000	13,600
Consumption, units per hr.	136 *b*	39 *c*	260 *c*	193 *c*	295 *b*
B.t.u. per lb. of water evaporated	1,600	1,605	2,840	1,810	3,110
Heat: Total in fuel per hr., B.t.u.	1,770,000	5,382,000	36,400,000	29,000,000	4,012,000
Total necessary to evaporate water, B.t.u.	.....	2,430,930	.....	.....	2,196,380
Efficiency, thermal, %	.....	45.2	.....	.....	54.7
Power, shell and fans	13	14	62	85	11
Costs: Equipment; f.o.b. factory, dollars *a*	6,900	.....	13,800	16,000	.....
Erection *a*	825	.....	1,850	2,000	.....
Total installed *a*	7,725	5,200	15,650	18,000	5,250
Operating, dollars per ton of water evaporated					
Power *d*	0.23	.....	0.10	0.10	.....
Labor *a*	0.55	.....	0.08	0.04	.....
Fuel *e*	1.07	.....	1.89	1.21	.....
Maintenance *f*	0.02	.....	0.02	0.02	.....
Miscellaneous *f*	0.01	.....	0.01	0.01	.....
Total	1.88	.....	2.10	1.38	.....

a Approximate. *b* Pounds. *c* Gallons. *d* At 1¢ per hp-hr. *e* At $3 \cdot 10^6$ B.t.u. per dollar. *f* Estimated.

there introduced under pressure follows generally the paths indicated by the arrows in Fig. 10. The diameter of the discharge opening is adjustable to permit variation in depth of bed. Normal gas exhaust is at the discharge end.

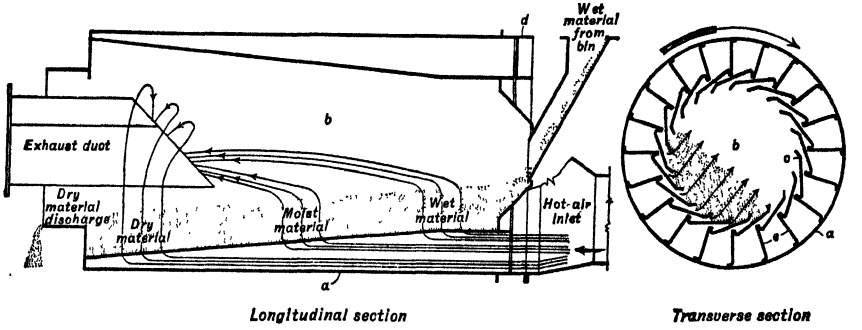

FIG. 10. Rotary louvre drier.

Sizes range from 6- to 35-ft. length to evaporate from a few pounds to 12,000 lb. of water per hr. Evaporation is stated to be 5 to 11 lb. per lb. of 13,000-B.t.u. coal.

Indirect-heat rotary driers are used when discoloration or contamination of the solid would occur from contact with combustion gases, and when dusting would be excessive with a large flow of gas through or over the material. The drier in Fig. 8 may be run as an indirect-heat machine by closing damper *b* and opening damper *a*. Fig. 11 diagrams a 3-shell machine which has two heated surfaces, *a* and *b*, supported within and revolving with shell *c*, and gas flow as indicated by the arrows. In both types a small amount of air is forced through the cylinder carrying the material, or this is put under a slight vacuum, in order to exhaust evaporated water.

of rotary driers

Manganese ore *i*	Limestone *i*	Limestone	Lead conc.	Silica sand *i*	Leached zinc calcine	Chalk *i*	Kaolin *i*	Kaolin
SS, CF	SS, CF	SS, CF	SS, BS	DS, SD	DS, SD	DS, IH	DS, IH	IH, TT
5×40	7 1/2×75	8×60	4×22	6×35	6×35	5×38	7 1/2×55	6×45
16.2	52.9	49	3.05	15.8	7.5	2.1	9.5	4.5
8.0	5.4	4.8	13.0	5.0	43	28.0	23.0	21.0
.....	.....	60	52	.....	60	.....	.....	65
15	50	46.9	2.81	15	5.5	1.5	7.5	3.6
0.9	0.1	0.6	5.6	0.1	22	1.0	2.0	2.1
2,400	5,800	4,141	4.78	1,600	4,050	1,150	4,100	1,736
70.6	8.7	3.6	3.6	100	88	59	5.8	5.1
Oil	Coal	Coal	Coal	Oil	Oil	Oil	Coal	Coal
150,000	13,500	13,300	13,000	150,000	151,000	140,000	13,500	12,200
34 *c*	670 *b*	1,150 *b*	136 *b*	16 *c*	46 *c*	19.5 *c*	705 *b*	340 *b*
2,120	1,560	3,700	3,680	1,500	1,710	2,380	2,320	2,380
4,950,000	9,050,000	15,295,000	1,768,000	2,400,000	6,946,000	2,730,000	9,510,000	4,148,000
.....	.....	7,701,000	769,320	.....	5,182,000	.....	.....	2,203,000
.....	.....	50.4	43.5	.....	74.6	.....	.....	53.1
22	70	51	10	25	19	18	65	27
6,200	15,000	.....	.....	10,500	10,500	9,500	26,000	.....
800	2,000	.....	.....	1,300	1,300	950	2,400	.....
7,000	17,000	16,200	6,900	11,800	11,800	10,850	28,400	14,500
0.18	0.24	.....	.....	0.31	0.09	0.31	0.31	.....
0.18	0.10	.....	.....	0.20	0.08	0.35	0.10	.....
1.42	1.04	.....	.....	1.00	1.01	1.59	1.55	.....
0.02	0.01	.....	.....	0.03	0.02	0.05	0.04	.....
0.01	0.005	.....	.....	0.01	0.01	0.01	0.01	.....
1.81	1.395	.....	.....	1.55	1.21	2.41	2.01	.....

g BS, Brick-sheathed; CF, Counter-flow; DS, Double-shell; IH, Indirect-heat; PF, Parallel-flow; SD, Semi-direct; SS, Single-shell; TT, Tube-type.

i Reported by Hardinge Co.

Sizes of the 3-shell machines are 3- to 10-ft. diameters by 10- to 80-ft. lengths. EVAPORATION rates are 2 to 6 lb. of water per lb. of 13,000-B.t.u. coal.

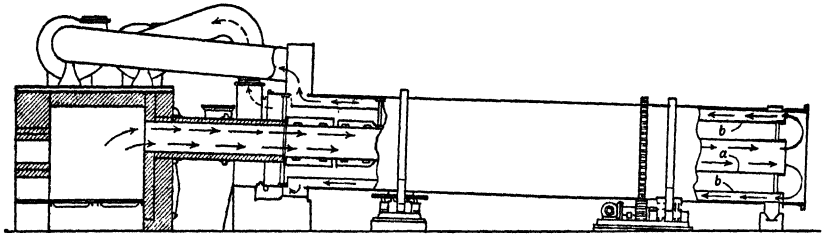

FIG. 11. Indirect-heat rotary drier.

Multiple-tube drier is a form of cylindrical drier with the shell replaced by a number (usually 3 to 5) of parallel tubes aggregating in outside diameter the usual 3 to 8 ft. of the single-shell machines. Various arrangements are shown diagrammatically in Fig. 12. Sufficient space is maintained between the tubes to allow free circulation of hot gases. The machines may be run either indirect-heat or semidirect. Advantages asserted are greater heating surface for indirect heating, and reduction in power consumption from 70 to 80% of that required for a single-tube drier owing to distribution of the ore stream around the axis of revolution. Bartlett & Snow claim an average of 8 lb. of water evaporated per pound of 13,000-B.t.u. coal in their multi-tube drier operated with both direct and indirect heat.



FIG. 12. Arrangements of tubes in multi-tube revolving driers.

Steam-tube rotary drier is used for many of the materials dried in indirect-heat driers and also for those materials that must be dried at relatively low temperatures. By using low-pressure or exhaust steam the greatest temperature any part of the material can reach will be slightly less than the temperature of the steam used. The cylinder is similar to that of single-shell direct-heat driers, but steam pipes take the place of the internal baffles and vanes. SIZES range from 2- to 8-ft. diameter by 10- to 80-ft. length. EVAPORATION rates vary greatly, but approximately 1 lb. of water is evaporated per 1 1/2 lb. of steam at 10-lb. pressure.

Manufacturers of rotary driers: Allis-Chalmers Mfg. Co.; C. O. Bartlett & Snow Co.; Buffalo Foundry & Machine Co.; L. R. Christie Co.; Hardinge Company; Louisville Drying-Machinery Co.; Stearns-Rogers Mfg. Co.; Struthers-Wells Co.; Traylor Eng. & Mfg. Co.; Vulcan Iron Works Co.

Performances of rotary driers of various types are given in Table 3.

In PHOSPHATE WASHING (*50 A 929*) a 5×40-ft. machine dries 135 to 165 tons of <1/4-in. slime-free gravel per 24 hr. from 20% to 2 or 3% moisture with a consumption of 75 lb. bituminous coal per dry ton and 15 to 20 hp. for driving the shell and fan. At the U. S. SMELTING, REFINING & MINING Co., Midvale plant, a 5×30-ft. Ruggles-Coles (double-shell) machine dried 90 tons of <16-m. table middling per 24 hr. from 14.5% moisture to bone-dryness with a consumption of 3 tons of bituminous coal per 24 hr. Temperature of exit gases was 350° F. Speed, 5 r.p.m. Power consumption: driving shell, 6 hp.; fan, 4 hp. About 5.5% possible running time was lost owing to shell repairs. At AFTERTHOUGHT COPPER Co. (*119 P 154*) a 5×30-ft. oil-fired machine was used to dry about 150 tons flotation concentrate per 24 hr. from 15% to 5% moisture. About 10 tons of flue dust was collected monthly. Some caking occurred near the feed end when concentrate was sticky.

On the basis of the reported figures, THERMAL EFFICIENCIES range from about 40 to 75%, and B.T.U. PER LB. OF WATER EVAPORATED from 1,500 to 3,700, for a considerable variety of materials. High fuel consumption correlates, in general, with fine grain sizes and/or drying to a fraction of 1% of moisture.

4. MISCELLANEOUS DRIERS

Screen-type driers consist of screens over which wet material travels while subject to a down-draft of heated gas (see D-L-O drier, Sec. 16, Fig. 13). Such driers are not suitable for fine material (<1/4-in.). See also Sec. 16, Art. 5.

Utah vibrating drier is a Jeffrey-Traylor-type conveyor (Sec. 18, Art. 23), heated underneath and boxed in above and below and run semidirect. A 2×30-ft. machine dried 30 t.p.d. of molybdenite concentrate from 15% moisture to 0.5%.

Centrifugal driers. See centrifugal filters, Sec. 16, Art. 8.

Electrical driers. At GOLD HUNTER (*111 J 909*) eight coils of high-resistance wire wound on 1-in. iron-pipe supports were spaced at 1-ft. intervals across and near the face of an Oliver filter. Each unit consumed 3.95 kw. The filter handled 30 t.p.d. of mixed table and flotation concentrate. The cake without the drier averaged 11% water; with the drier, 8.7%. The cost per ton of water evaporated

was $6.86. At BUNKER HILL & SULLIVAN (*ibid.*) a rotary drier consisting of a piece of 12-in. iron pipe 10 ft. long, covered with 3/8-in. asbestos, was wound with 205 turns of bare No. 4 hard-drawn copper wire (90 lb.) terminating on collector rings. A current of 82 amp. at 282 volts was supplied and heat generated by hysteresis and eddy-current losses in the pipe walls. The pipe rotated 7 r.p.m.; spiral rabbles inside, turning 1.4 r.p.m., moved the ore through. Pre-heated air was forced through countercurrent. The capacity was 17 t.p.d. of flotation concentrate from 11.4 to 6% moisture; cost of power, $5.66 per ton of water evaporated.

Cylinder or film driers (ATMOSPHERIC DRUM DRIERS) consist of one or more revolving, hollow, metal cylinders internally heated by means of steam. The material to be dried must be more or less fluid; suitable feeding arrangements deposit it as a thin film on the cylinder. Dried material is removed by scrapers before completion of a revolution. Speed of rotation of the cylinder governs the time that the film is in contact with heat. These are rarely used in ore dressing.

Spray driers. Various atomizing devices spray liquid into a heated chamber. Dry products collect at the bottom and in dust collectors.

Vacuum driers consist essentially of heated chambers under vacuum, with means provided for introduction of feed and discharge of product; numerous mechanisms have been devised for the purpose. They are used only when the heat necessary to dry the solid at atmospheric pressure would injure it; this is rarely the case in ore dressing.

Comparison of driers. The SINGLE-SHELL ROTARY drier is cheaper in first cost and maintenance per unit of capacity than other rotary types, and is satisfactory for metallic ores. It is generally favored because it affords ready control of temperature and drying time. The TOWER drier has lower maintenance costs but consumes more fuel per unit weight evaporated than the rotary; it is better adapted to a crowded mill, but control of time-factor is practically nonexistent. The DOUBLE-SHELL DIRECT-HEAT and the LOUVRE types have the lowest fuel costs, and can be used to dry many materials that must not be subjected to the high temperatures prevailing in direct-heat single-shell machines. HEARTH, VIBRATING-CONVEYOR, and INDIRECT-HEAT ROTARY driers are used for drying fine materials to a low moisture content when dust losses would be high in other types; also for materials which must not be contaminated by the products of combustion. STEAM-TUBE drier eliminates dust loss and contamination, but sticky materials tend to pack around the pipes.

5. OPERATION OF DRIERS

Dewatering of feed should always be practiced if the material contains free surface moisture that is removable by draining or filtration; these methods of water removal are usually much cheaper than drying, especially when large tonnages are involved.

Dusting. Operation of a drier on a material containing valuable fines involves a continuous compromise between fuel consumption and dust loss.

Dietz and Keedy (*43 A 342*) give the data shown in Table 4 for operation of a 4 1/2×24-ft. rotary drier running at 8 r.p.m. with light draft, the feed carrying 5 to 8% moisture. At a dry-crushing cyanide plant, drying <2-in. material in rotary driers that needed strong draft, 5 to 6% of the feed, which assayed 0.31 oz. Au and 0.15 oz. Ag, was lost as <150-m. dust that assayed 0.48 oz. Au and 3.48 oz. Ag. In an elaborate test with a 4×30-ft. drier, sloped 1/4 in. per ft., they found that, in drying <2-in. zinc ore, about 12% of the feed was reduced from >16-m. to <16-m. by the tumbling action in the drier and that this 12% carried 19% of the zinc. In a dust-collecting system in the same plant substantially 16% of normal drier feed was collected carrying 19% of the total zinc; the more gritty part of the collected product had the higher assay.

Table 4. Dust loss in a rotary drier (*After Dietz and Keedy*)

Products	Weight, per cent.	Assay		Percentage of total	
		Pb, per cent.	Ag, ounces	Pb	Ag
Total feed	100	10.35	9.68	100	100
Dry discharge	96.2	9.77	9.34	90.7	95.40
Settled in chamber	1.77	35.30	10.30	6.04	1.94
Settled in smokestack	0.76	18.50	8.60	1.36	0.69
Lost in gases	1.27	14.30	15.20	1.75	2.04

Dust losses can, in any given case, usually be reduced by reducing the velocity, and hence the volume, of gas through the evaporating zone, but this expedient involves increase in fuel consumption in order to raise the temperature and corresponding moisture-carrying capacity of the gas. Gas velocity should be kept down to about 80 f.p.m. when the dusting tendency is serious; normal velocities are from 200 to 400 f.p.m.

Efficiency of a drier is commonly defined as the ratio $E = 100(H_s + H_w + H_e)/H_f$, in which H_f is the total heat in the fuel and the other H values are defined as on p. 04 for an evaporating temperature of 212° F.

Example. To calculate the efficiency in drying a zinc concentrate (58% Zn, quartz gangue) from 14.5% to 3.5% moisture at the rate of 7.4 tons wet feed per hr. with a consumption of 39 gal. oil per hr. (138,000 B.t.u. per gal.). Initial temperature of feed, 50° F.

Weight of dry solid (W_s) = 7.4(0.855) = 6.3 t.p.h.

Weight of water in feed (W_w) = 7.4(0.145) = 1.1 t.p.h.

Weight of water evaporated (W_e) = (Fig. 13) 230 lb. per wet ton = 7.4(230) = 1,700 lb.

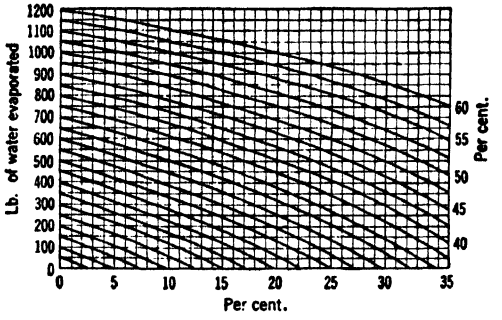

Enter chart on diagonal representing percentage of moisture in feed, follow diagonal to intersection with ordinate representing moisture in product and read on left-hand scale pounds of water to be evaporated per ton of wet feed.

FIG. 13. Weight of water evaporated per ton of wet feed from a given inlet to a given outlet moisture percentage (*after Ruggles-Coles Eng. Co.*).

Specific heat (h_s) of concentrate from Kopp's law (Art. 1): Assuming concentrate assayed 58% Zn, the percentage of sphalerite in it is 58/0.67 = 86.7%; quartz, 13.3%. Sp. ht. of sphalerite = (6.2 + 6.2)/97 = 0.13. Sp. ht. of quartz = (3.8 + 2 × 4)/(28 + 32) = 0.20. Sp. ht. of concentrate = 0.87(0.13) + 0.13(0.20) = 0.14.

H_s = 6.3(2,000)(0.14)(212 − 50)	= 286,000 B.t.u.
H_w = 1.1(2,000)(212 − 50)	= 356,000
H_e = 1,700(970)	= 1,650,000
Total	2,292,000 B.t.u.
H_f = 39(138,000)	= 5,382,000 B.t.u.
E = 229/538	= 42.6%

This method of calculation is a rough approximation only. Its value, if any, is for comparison of different machines when the same assumptions are made in all cases as to temperatures. Error is greater the drier the discharged material, because of the degree of superheat necessary to drive off thin-film moisture. For this reason estimation of the quantity ($H_s + H_w + H_e$) from Table 5 is justified in efficiency calculations generally, even though the item H_s in the total will be high for metallic concentrates.

Table 5. Heat, required for drying at 100% thermal efficiency, thousands of B.t.u. per ton of wet feed *a*

Final moisture, %		0	1	2	4	6	8	10	12	15	20	25
Original moisture, %	3	153	113	91	.....	.....	.....	.....	.....	.....	.....	.....
	5	181	161	139	97	.....	.....	.....	.....	.....	.....	.....
	8	258	237	215	171	127	.....	.....	.....	.....	.....	.....
	10	312	291	268	223	177	132	.....	.....	.....	.....	.....
	12	361	347	323	277	231	185	139	.....	.....	.....	.....
	15	458	436	412	364	316	268	221	171	.....	.....	.....
	20	623	599	569	523	471	420	369	317	240	.....	.....
	25	810	775	758	702	658	592	538	482	399	261	.....
	30	1,022	996	966	907	847	789	729	670	571	432	284
	35	1,268	1,239	1,208	1,145	1,079	1,015	951	887	791	630	469
	40	1,554	1,526	1,490	1,421	1,350	1,280	1,210	1,140	1,025	860	685
	45	1,893	1,862	1,824	1,747	1,670	1,593	1,516	1,440	1,324	1,132	940
	50	2,300	2,264	2,221	2,137	2,052	1,967	1,882	1,797	1,671	1,459	1,246
	55	2,796	2,759	2,712	2,617	2,522	2,427	2,332	2,238	2,095	1,858	1,615
	60	3,418	3,378	3,324	3,216	3,109	3,002	2,894	2,787	2,624	2,357	2,089

a Based on feed temperature of 60° F. and discharge at 212° F.; specific heat, 0.21.

Heat losses are caused by imperfect combustion, radiation from the structure, leakage of gas, and heat in the exit flue gas and in the discharged solid. Efficiencies of operating driers in ore-dressing plants (Tables 2 and 3) indciate that total losses range from 25 to

60%, with the average expectable loss between 40 and 50% in single-shell rotary driers. No accurate breakdown is possible. Table 6 can be used to estimate radiation losses, from which the possible economies flowing from insulation may be judged. Metal extending from the heating zone through an insulated covering causes surprisingly large losses, even when only a bolt. Leakage loss may amount to 10 or 20% of the sum of the useful

Table 6. Heat loss by radiation from drier walls (*After Buck, 29 CME 626*)

Material	Heat loss, B.t.u. per square foot per hour per degree F. temperature difference
Asbestos, Johns-Manville special, Type A, built-up	0.11 to 0.13
Asbestos, Johns-Manville special, Type B, built-up	0.20 to 0.22
Asbestos, Johns-Manville special, Type C, built-up	0.24 to 0.28
Asbestos sheet, 2-in., fine, refractory-coated	0.27
Asbestos, 1/4-in. Transite, 2-in. impregnated Asbestocel sheets, sheet steel	0.25
Brick, 4-in. wall	0.77
Concrete, 4-in. wall	0.86 to 0.94
Steel, 50° temperature difference	1.95
Steel, 100° temperature difference	2.15
Steel, 150° temperature difference	2.40
Steel, 200° temperature difference	2.67
Sheet steel, 2 plates separated by 3/4-in. air space	0.63
Sheet steel, 2 plates separated by 1-in. impregnated Asbestocel sheet	0.44
Sheet steel, 2 plates separated by 1 1/2-in. impregnated Asbestocel sheet	0.32
Sheet steel, 2 plates separated by 2-in. impregnated Asbestocel sheet	0.25
Wood, 7/8-in. T. and G. sheathing	0.73
Wood, 7/8-in. T. and G. sheathing, and sheet steel	0.72
Wood, 7/8-in. T. and G. sheathing, building paper, 4-in. air space, building paper, 1/4-in. Transite, built up on 2×4-in. studs	0.41

heat and the radiation loss; it should, therefore, be guarded against by making all seals as effective as possible. Flue-gas losses are due to the sensible heat in these gases above that required to prevent condensation in the drying zone. They depend, therefore, on both the weight and temperature of the flue gases. Generally the loss is inversely proportional to the percentage of saturation and directly proportional to the rise in temperature of the EXCESS AIR (air above that required for combustion). The relationships between these quantities are such that, with saturated gas leaving, the loss passes through a maximum at an exit temperature of about 110° F. Since this temperature is lower than must ordinarily be maintained to prevent condensation, except when the humidity of the exit gases is low, it follows that minimum loss of heat through the flue will correspond to relatively high temperatures coupled with a high percentage of saturation. Losses of sensible heat in the exit solids and increased radiation losses militate against carrying this conclusion into practice. Usual exit temperatures of gases in ore driers are in the range of 100° to 200° F.; the solids leave at 150° to upward of 300°, according to the extent of drying.

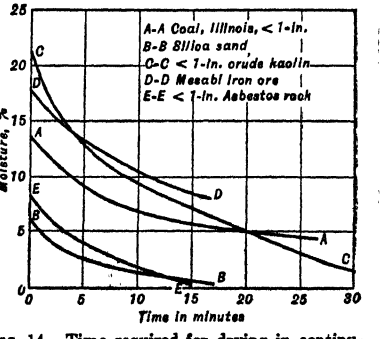

FIG. 14. Time required for drying in continuous rotary driers (from commercial operations).

Capacity of a drier is not expressible in any useful general form related to size of machine. The basic element in capacity is time-factor. Some rough data on time-factors are presented in Fig. 14. No coefficients of rate, universally applicable, have been established, although the parallelism of the curves in Fig. 14 indicates some promise for such a coefficient for the early stages in the case of relatively nonporous materials, *i.e.*, those in which surface moisture predominates. The porous materials (curves *C* and *E*), which contained, presumably, the most internal moisture, are remarkable for their maintenance of higher rates than the others; this is not improbably due to friability in the rotary driers used. In general, sized material dries faster than unsized, coarse faster than fine, nonporous faster than porous

Operating costs are extremely variable. Depreciation, fuel, power, maintenance, and labor are the chief items. Different relative humidities and different altitudes cause different power and heat requirements, hence correction for these factors must be made in comparing and estimating costs. Fuel and fuel-handling charges are rarely the same even for identical driers on the same material. Power consumption varies with the material and the type of drier. Maintenance varies with the design and construction of the drier, particularly as to internal and moving parts, and with the abrasiveness and other physical and chemical properties of the material and its water content. Depreciation is about 10%. Table 7 gives reasonably typical costs for operations.

Table 7. Operating costs of driers

Material	Zinc conc.	Lead conc.	Coal, 1 1/2-in.	Sand	Washed clay	Zinc conc.	Molybdenum conc.
Type of drier *a*	SS, DH	SS, DH	DS, SD	DS, SD	TT, IH	RH	RH
Moisture, %: Original	13.8	14.3	9.8	6.2	24.3	14.5	16
Final	4.2	4.8	1.2	0.6	0.8	6.0	2.5
Tons per month	2,210	2,008	2,030	9,560	792	2,736	496
Hours operated per mo.	408	442	228	352	212	568	442
Costs, dollars per ton:							
Fuel	0.082	0.073	0.052	0.031	0.204	0.108	0.119
Power	0.019	0.026	0.032	0.015	0.093	0.021	0.028
Labor	0.087	0.113	0.067	0.023	0.128	0.049	0.123
Maintenance	0.010	0.015	0.058	0.020	0.041	0.036	0.042
Depreciation	0.030	0.024	0.058	0.014	0.143	0.033	0.138
Total	0.228	0.251	0.239	0.103	0.609	0.247	0.450

a DH, direct-heat; DS, double-shell; IH, indirect-heat; SD, semidirect-heat; SS, single-shell; RH, rabbled-hearth; TT, tube-type.

6. DESIGN OF DRIERS

Driers are designed, as to both mechanical and thermal features, by a method of cut-and-try which disguises the baldest empiricism under a cloak of seeming fundamental attack.

Elements of design are (*a*) heat supply, (*b*) heat transfer, (*c*) rate of evaporation, and (*d*) transport of feed and products.

Heat supply. Theoretical total heat is estimated for the given conditions from Table 5 or, with an appearance only of greater accuracy, by calculation (see ***Efficiency,*** Art. 5) based on a determination of the mean specific heat of the material, and a guess or a laboratory test (see ***Rate of Evaporation*** below) as to the temperature of evaporation. Total heat necessary is then estimated on the basis of another guess as to probable heat losses. Since these cannot be broken down and estimated in detail, the usual method is to divide theoretical heat by an estimated over-all efficiency (Art. 5) expressed as a decimal fraction.

All heat to perform the estimated computed heating duty must be supplied by gas passing around and through the heating zone. The heat balance equation is

$$W_G h_g (t_I - t_E) = \text{Theoretical heat} + \text{heat loss}$$

in which W_G = total weight of gas required in lb., h_g = specific heat of the gas (0.23, for air, is sufficiently accurate, since air predominates), and t_I and t_E are inlet and exit temperatures of the gases respectively. With this gas there will pass through the exit passages of the drier the vapor of the evaporated water. The DEGREE OF SATURATION may be determined by adding to the evaporated water the water entering with the inlet air. Compare the ratio of total pounds of water in exit gas to total pounds of dry air therein with the column headed "Ratio, vapor/air" in Table 1. If the corresponding temperature in the table is well below the exit temperature, no precipitation need be feared.

Volume of gas. To determine the volume of gas to be handled by the blower, take the reciprocal of the corresponding value in the column headed "Weight in lb. per cu. ft. of saturated mixture" and multiply by the ratio $(t_E + 491)/(t_t + 491)$ where t_t is the tabular temperature corresponding to saturation, as above.

Velocity of air leaving the drier shell should not exceed 300 to 400 ft. per min. if dust loss is an important consideration. If a drier, calculated as above, shows greater velocity than this, and dust loss must be prevented, higher initial and lower final temperatures should be investigated. If such change in conditions does not reduce velocity sufficiently, a dust collector is probably the cheapest method of overcoming the difficulty.

Amount of fuel required is determined by dividing the total heat requirement ($H_e + H_w + H_e + \ldots$) by the heating value per pound of the fuel that is to be used. See Table 8.

C. O. Bartlett & Snow estimate the consumption of 13,000-B.t.u. coal as 1 lb. per 5 lb. of moisture evaporated in an exposed-shell direct-heat revolving drier, 1 lb. per 6.5 lb. of moisture in an enclosed-shell indirect-direct heat machine, and 1 lb. per 8 lb. of moisture in the enclosed-shell, indirect-direct heat, multi-compartment machine, when the final moisture content required is not below 3 or 4%. See also Tables 2 and 3.

Table 8. Approximate heating value of various fuels

Fuel	B.t.u. per pound
Anthracite.....	12,000 to 14,000
Bituminous.....	10,000 to 15,000
Lignite.....	6,000 to 12,000
Air-dried peat...	5,000 to 9,000
Dry wood.....	8,000 to 9,000
Fuel oil.....	18,000 to 19,000

Temperature. When no limits are set by the requirements of the material itself, the attempt should be to make the temperature drop of the gases in passing through the drying zone as great as possible. The temperature limit is then imposed by the amount of heat that the drier shell itself can stand. The strength of steel plate reaches a maximum at about 600° F. and falls very rapidly at higher temperatures until at about 660° it is the same as at ordinary temperatures. At 1,000° the strength is only 40% of maximum, at about 1,200° F. the plate becomes dull red and hereabout the susceptibility to corrosion increases greatly. Hence the temperature of the incoming gas should never be as high as this unless the gas-inlet end of the shell is protected by very moist, cold ore, and even with this protection the shell should not be called upon to support any great load at the heated portion.

High inlet temperatures with direct-heat driers almost invariably result in high exit temperatures, hence if large temperature drop is to be attempted, the drier should be of the semi-direct type, with the hot gas entering under the feed-inlet end.

The lower temperature limit may be anything desired, except that it must be borne in mind that the volume of gas necessary to carry the heat to effect evaporation will be very great when the inlet temperature is low, that as a result the heat loss in the outlet gases will probably be greater than when a smaller volume of gas at higher temperature is used, that the power required to move the larger volume of gas will be greater, and that dust loss will be increased. On the contrary, radiation loss will be less and the life of the drier shell will be longer with low inlet temperature. (See *Heat losses*, Art. 5.)

Combustion structure. Firebox in rotary driers is usually placed directly at the end of the shell, so that furnace design is relatively simple. Countercurrent flow of gas and material is commonly used in single-shell direct-heat machines in order to utilize the sheet of wet material at the feed end to knock down dust, and also to prevent checking of

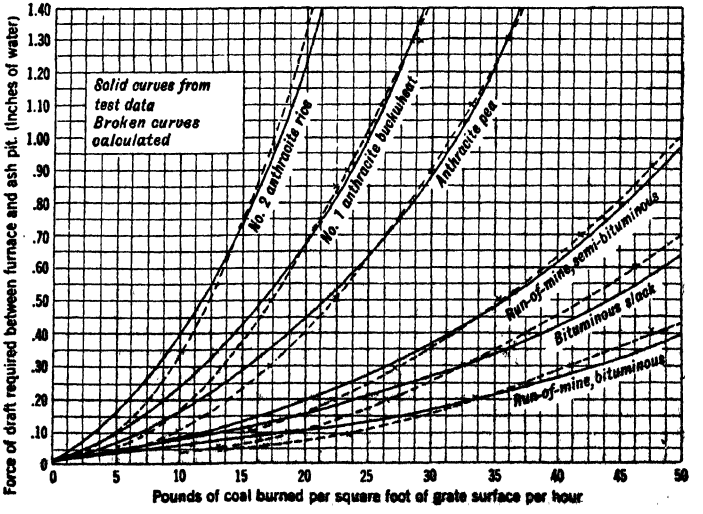

FIG. 15. Size of grate required for different kinds of fuels (*after Lucke, Engineering Thermodynamics*).

combustion by the cold feed. Countercurrent flow is necessary when material is to be dried to a low moisture content. It has the disadvantage that the discharging solid is subjected to maximum temperatures and carries away much heat. Double-shell machines are usually fired from the feed end, since this does not involve direct contact of burning gases with cold wet feed and yet does make for maximum heat flow by reason of the large temperature difference prevailing here. Forced draft, usually by exhauster fans, is almost universal; suitable flues and dampers are normally provided to permit the desired apportioning of air to the burning zone and to the combustion gases. Use of a pressure fan as well as an exhauster makes it possible to maintain substantially atmospheric pressure in the gas system, thus minimizing leakage. Fig. 15 gives data for estimate of grate areas.

Firebox in tower driers is always at the bottom, *i.e.*, the arrangement is counterflow.

Heating arrangement for hearth driers is much more complicated than for shaft types. The basic requirement is a checkerwork arranged for maximum absorption of heat from the flue gases, and for maximum radiation of heat to the underside of the hearth plates. This is a special problem for which solution should not be attempted without reference to works dealing especially with furnace design.

Heat transfer. For general discussion of the problem see Art. 1. In hearth driers provision for transfer to the hearth is a matter of furnace design (see preceding paragraph). Transfer to the solid is principally by conduction. This is slow through quiescent gas, such as in the pores of a bed; hence the bed should be continually turned to bring all solid particles repeatedly in contact with the hearth plates. Practice indicates that the best bed thickness for flotation concentrate is from 3 to 4 in., but this is a compromise between requirements for evaporation and those for heating.

In shaft driers all heat is brought to the solid through the medium of hot gases. In direct heating the essential requirement is direct contact of particle with gas. This is attained by dropping the material through the gas stream; the aim of the designer is to make the contacts as frequent and long-lived as possible. In tower driers this is accomplished by frequent stoppage of the stream by shelves or perforated plates, which also serve to increase relative gas-particle velocities (see Art. 3) as the two stream through the constricted throats in opposite directions. In rotary driers showering is effected by lifting the solid on lifter shelves attached to the interior of the shell. These should be so placed as to lift the solid as high as possible before beginning to discharge, and should be of such depth as to aid in effecting individual-particle discharge. When material is granular and tends to fall in masses the lifters should be of small capacity and closely spaced, but this expedient is not applicable with material that cakes; with such material larger pockets, with heavy chains in the bottom (see Sec. 18, Art. 14) may be needed to prevent entire loss of lifting capacity.

Rate of evaporation. For governing factors see Art. 1. Laboratory tests to determine time-factor are substantially useless except on a relative basis, *i.e.*, a known and an unknown heated under the same conditions, with an attempt to simulate, as much as possible, conditions in an actual drier of the type proposed. Such tests are useful principally, however, to indicate caking tendencies and to classify the proposed drying as generally quick or the reverse, whereupon an estimate of time is made from experience.

Transport. Once the question of drying time is settled, the proper size of cylinder for a rotary drier can be determined as follows: If the drying time is between 20 and 30 min., it is usual to make the volume of the shell (V) five times the volume of material in it at any one time, or $V = 5tTc/24$, in which t = drying time in hours, T = tons feed per 24 hr., and c = cu. ft. of feed per ton. The diameter d and length l of the shell may be found from V through the relation, ordinarily prevailing, that $l = 7.5d$, from which $V = 6d^3$ (approx.). This value of d must be such as to accommodate the minimum gas velocity that will be required.

Usual commercial cylinder diameters are 3 to 12 ft. (in 1-ft. steps) and the usual corresponding lengths are the nearest even 5-ft. multiple to 7.5-times the diameter.

Slope and speed (r.p.m.) may next be settled from the relation $l = tnsd[d/2 + \sin(\alpha - 90)]$, where l, t, and d have the significance already assigned, n = r.p.m., s = slope in ft. per ft., and α = the average angle, reckoned in the direction of revolution, from the bottom of the shell to the point where the lifters discharge. With radial lifters, α may be taken as 112°, with U-shaped lifters at 135°. The usual speed ranges from 60 to 100 f.p.m. peripheral, the higher figure corresponding to the larger diameters; the limit is primarily structural. The usual slope is 1 : 24. With α fixed, setting either n or s obviously sets the other.

Costs of installation (approximate, 1938) are given in Tables 2 and 3. Manufacturer's prices on iron and steel parts furnished range from 8¢ to 27¢ per lb., the lower prices corresponding to the simpler types. Installation of some of the lower priced types,

e.g., brick enclosure of a revolving shell, may make the total installed cost the highest. Installed cost per unit of capacity is lower the larger the unit. Cost of dust-collection equipment and of gas or oil burners and stokers will be additional to the costs given.

Average prices, weights, and recommended power installation for rotating the shell, from four manufacturers of similar types of single-shell, direct-heat driers, are given in Table 9. The factory prices do not include motors, power transmission equipment, or brick.

Table 9. Prices of direct-heat rotary driers (1938)

Size of shell, ft.	Price, f.o.b. factory	Shipping weight, lb.	Installed hp. for rotation
3×30	$1,560	12,600	5
4×40	1,990	18,700	7
5×50	3,180	33,200	12
6×60	5,050	61,000	20
7×75	7,950	92,000	30

SECTION 18

STORAGE AND MILL TRANSPORT

ART.		PAGE
	STORAGE	
1.	Introduction	01
2.	Shape of bin	03
3.	Design of bins	04
4.	Discharge from bins	19
5.	Ground storage (stockpiling)	23
	TRANSPORT	
6.	Belt conveyor	29
7.	Pan and apron conveyors	47
8.	Bucket conveyor	49
9.	Flight conveyor	50
10.	Screw conveyor	51
11.	Miscellaneous conveyors	53
12.	Bucket elevator	55
13.	Continuous-bucket elevator	60
14.	Centrifugal-discharge elevator	62
15.	Chutes	66
16.	Launders	68
17.	Centrifugal pumps	79
18.	Spiral pump	88
19.	Diaphragm pump	89
20.	Tailing wheel	91
21.	Air-lift	92
22.	Feeders	97
23.	Automatic weighing devices	105
24.	Distributors	106

STORAGE

REVISED BY

E. J. TOURNIER, ROBINS CONVEYORS, INC.

AND

E. K. JUDD, MINING ENGINEER, NEW YORK, N. Y.

1. INTRODUCTION

Necessity for storage arises from the fact that different parts of the operation of mining and milling ores are performed at different rates, some are intermittent and others continuous, some are subject to frequent interruption for repairs and others are essentially batch operations, so that unless reservoirs for material are provided between the succeeding different steps the whole operation is rendered spasmodic and, consequently, uneconomical. Storage bins are the best means of distributing the product of a crusher of high capacity to several machines of low capacity, as, for instance, jaw-crusher product to stamps or finely crushed products to a battery of screens and, in the same way, crushing-plant product to grinding mills. Large bins are desirable because they allow mill feed to be well mixed and tend toward uniformity. When a bin is fed with undersize from run-of-mine ore and crushed oversize, these products should be delivered at the same point in the bin or segregation of sizes, and probably, of values, will be unavoidable in drawing.

Surge bins, *i.e.*, small bins of 5- to 50-ton capacity, are commonly placed ahead of fine crushers, screens, or any other machines, the efficient operation of which is dependent upon uniform feed rate. They should be provided with feeders especially designed to deliver at a constant rate by weight (Art. 23), irrespective of the head of crushed material on the discharge gate. Wet-pulp storage is secured in tanks with agitating means (Sec. 12, Art. 7); such storage is provided when time is needed for a chemical reaction; it may be made to serve also, however, to equalize pulp flow.

Amount of storage necessary is ordinarily considered and expressed in terms of the daily tonnage capacity of the plant. It depends on the equipment of the plant as a whole, its method of operation, and the frequency and duration of regular and unexpected shut-

downs of individual units. At many mines ore can be taken out during only a part of each day on account of the necessity for getting supplies into the mine through the same opening; on the other hand, concentrating mills are most efficient when continuously operated, because of the unavoidable tailing losses in shutting down and starting up the machinery. Mine operations are more subject to unexpected interruption than mill operations, and coarse-crushing machines are more subject to clogging and breakage than fine crushers, grinding mills, and concentrating machinery. Consequently both the mine and the coarse-crushing plant should have greater hourly capacity than the fine-crushing, grinding, and concentrating units, and storage reservoirs should be provided between them and the mill proper. Ordinary mine shutdowns, expected or unexpected, will not generally exceed 24 hours' duration, and ordinary coarse-crushing plant repairs can be made within an equal period, if a good supply of repair parts is kept on hand. Therefore, if a 24-hour supply of ore that has passed the coarse-crushing plant is kept in reserve ahead of the mill proper, the mill can be kept running independently of shutdowns of less than 24 hours' duration in mine and coarse-crushing plant. It is wise to provide for a similar shutdown of the mill. In order to do this the reservoir between coarse-crushing plant and mill must contain at all times unfilled space capable of holding a day's tonnage from the mine.

Ore-storage reservoirs ordinarily are not of such shape that they can be filled or emptied completely without shoveling and, since to incur the expense of shoveling would to a large extent defeat the purpose of storage, additional storage room must be provided so that a day's tonnage may be *drawn* into the mill proper, in case the ore supply stops for a day, and the same tonnage may be discharged into the partly filled bin in the usual way, in case the mill ceases to draw. The amount of space that must be provided for undrawable material and the additional amount that cannot be loaded without shoveling depend upon the shape of the bin, the method of drawing, and the method of loading. In ordinary rectangular bins it will amount to something more than that necessary to hold a day's supply of ore. Hence a bin, to fulfill the conditions set down, must have a volume equivalent to something more than 3 days' ore supply and should be run about half full to provide against unexpected shutdowns at either end of the plant. Similar methods of analysis are applicable at other points in the path of the ore. The average of present-day practice is about 3 days' storage capacity; individual figures range from 1 hr. to 16 days (Sec. 20, Table 13). These figures in many cases include both coarse- and fine-ore storage, *i.e.*, between mine and coarse-crushing plant and between coarse-crushing plant and mill. Peculiar conditions, such as long and uncertain haul from mine to mill, great variety in character of ores treated in a given mill, and the like, give rise to special storage problems, resulting in the provision of storage in excess of the average.

Methods of storage. Considerable storage is usually provided in the mine itself, in stopes and skip pockets, thus allowing actual breakage of ground and some underground haulage to proceed even after available surface storage space has been exhausted. When for any reason an extended mill shutdown is incurred and it is particularly desirable that underground breaking be carried forward in excess of the underground storage capacity, stockpiles may be built on the surface in a location convenient both for building and subsequent excavation. This may be the solution when extensive exploration work is carried forward during the building of a mill. STOCKPILING OR GROUND STORAGE is resorted to when winter conditions are such as to prohibit excavation in open-cut mines and the year's mill supply must be taken out in the open months; or when transportation is stopped during the winter, though mining can be carried forward, as is the case in some of the Lake Superior iron mines; or when the product of a milling operation is bulky, as in the case of coal or crushed stone, and the demand is seasonal and in excess of mine or mill capacity. RAILROAD CARS may form a considerable part of the storage system; particularly when the haul from mine to mill is long. BINS are the commonest type of ore-storage reservoir. They are built in several different shapes, of masonry, concrete, steel, and wood. Shape is determined primarily by the service the bin is to render, secondarily by the materials of construction. Wooden bins are ordinarily cheapest in first cost and easiest to construct. Masonry and concrete bins have the longest life. Steel bins are lightest and occupy the least space for a given capacity. They can be built in shapes that better withstand the pressure of the filling material and they maintain their original rigidity much better than wooden bins. Fire hazard is great in wooden bins, and, if the ore is wet, the bottom rots rapidly unless well ventilated. If bins are loaded by trains they are subjected to much vibration and heavy racking strains. Under these conditions the tension rods in wooden bins must be continually watched and tightened; yet the bins will, in time, become so rickety as to be dangerous. The large sticks of timber needed in high and wide wooden bins are becoming so scarce and expensive that the cost of such bins approaches more and more closely that of the other types.

2. SHAPE OF BIN

Common shapes are shown in Fig. 1.

Flat-bottom bin (Type *a*) is suited to timber, steel, or concrete construction. It is the cheapest type of all to build and in it the ore forms its own bottom so that there is no wear on the bin bottom in drawing.

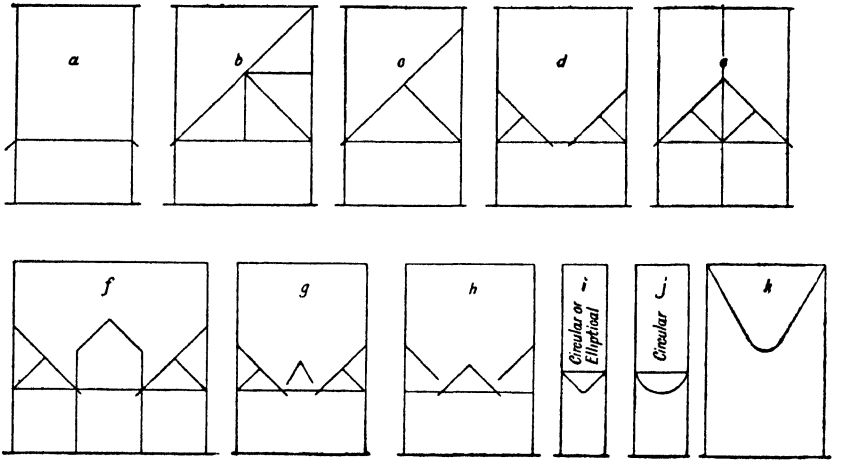

FIG. 1. Typical bin shapes.

Of 50 mill bins reported in 1939 (Q), 28 had flat bottoms. Of 66 bins (all flat-bottomed) in the N. J. ZINC Co. mill, 44 are of steel, 21 of wood, and 1 of concrete.

DISADVANTAGES are (1) that the bin cannot be emptied without shoveling, and (2) that the angle of repose of material in the dead part of the bin may be as great as 60° when the ore contains a large amount of fines and an appreciable percentage of moisture, so that the free-running (LIVE) bin capacity is much less than in a sloping-bottom bin of the same horizontal cross-section. A flat-bottom bin is not suitable for service where material must be treated in lots, as in custom plants. Flat bottoms are frequently filled with waste, particularly if the ore is high-grade, so that interest will not be lost on high-grade ore locked up in bottom filling. But if the mill is working to capacity in any case, treatment of material that would otherwise form bin filling leaves a corresponding amount "locked up" in the mine. The loss with high-grade ore by passage of fine material down into the waste filling may well exceed an actual interest loss. If the dead space in a flat bin is filled with ore, this ore forms a reserve if the emergency justifies shoveling, but after the bin has been thus emptied no ore can be drawn therefrom until an amount substantially equal to that shoveled out has been replaced. Anthracite coal should not be handled through flat-bottom bins because of breakage of coal in the dead space by pressure of the coal above.

Slanting-bottom bins. Type *b*, Fig. 1, is typical of small bins that it is desired to empty frequently, such as shipping bins and concentrate bins. Type *c* is perhaps the commonest around milling plants. It is suitable for distributing to and feeding rolls, ball mills, gravity stamps, or other multiple units. Completeness of discharge depends upon the spacing of gates lengthwise of the bin and the bottom slope. The minimum slope upon which material will slide depends upon the kind of material, size of pieces, percentage of fines, percentage of moisture, and surface of bin bottom. Minimum sliding angles for dry materials containing only a small percentage of fines, on steel-lined bottom, are given in Table 3. The slope of the bin bottom should be at least 2°, better 5°, greater than these figures. In general, 45° is sufficient to move any ordinary ore (besides favoring the design of joints and members) but sticky ores may need 50° to 55°; however, too steep a slope may do more harm than good, by wedging and compressing the ore as it approaches the outlets. Fine, wet, and sticky ores sometimes move less freely on a smooth (steel-lined) than on a rough plank bottom at the same slope. Designers with the Southwestern Engineering Co. (*139 # 1 J 66*) recommend the shape shown in Fig. 2, in which *a* indicates the surface of repose; the floor, at 45° for convenience in framing, occupies the position and is supported in the manner shown. The residual

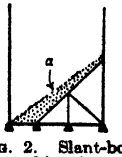

FIG. 2. Slant-bottom bin with ore-layer protection.

wedge of ore avoids abrasion on the bottom. Type *e*, Fig. 1, which is a modification of type *c*, is rarely used on coarse feeds, but is sometimes used for fine-ore and shipping bins. It saves timber for a given capacity, and is useful when delivery on two sides can be utilized.

Hopper-bottom bin (type *d*, Fig. 1) gives the highest percentage of gravity delivery of any of the first five types. Discharge must ordinarily be collected and transported to the following machines by a conveyor or cars. This type is particularly suitable for long bins of large capacity. When complete gravity discharge from a rectangular bin is desired, a common expedient is to add crosswise false bottoms diverging upward from both sides of the discharge opening. In such construction, it should be remembered, however, that the slope of the valley between two intersecting inclined bottoms is considerably less than that of either bottom and may cause much ore to hang back. For example, if two planes, both pitching 45°, intersect at right angles, measured horizontally, the slope of their intersection will be only 35 1/4°. Types *f*, *g*, and *h* are typical coal bins. They give a relatively high percentage of discharge by gravity, are shallow and do not cause the coal to crush, yet are of good capacity per foot of length. All of these types, while best adapted to timber construction, may be built of steel or reinforced concrete.

Steel bins. Forms *i*, *j*, and *k* are particularly adapted to steel construction, although both *i* and *j* have been built with reinforced concrete. Wood-stave circular tanks with flat bottoms have been used for both coarse-ore and concentrate-storage bins, but the gravity-discharge percentage is low. Circular and elliptical shapes are particularly suitable for deep bins, since the metal of the walls is under tensile rather than bending stresses and the pressure on the bottom is relatively small. Such bins with conical bottoms will draw practically clean, if the ore is not too moist. For complete gravity discharge of a given ore, the slope of the conical bottom must be considerably greater than would be necessary on the sloping bottom of a rectangular bin, similarly lined. If, for example, a rectangular bin requires a bottom slope of 45°, that of a conical bottom should be at least 55° for the same ore (*136 J 223*). Stress in the hemispherical bottom *j* is less for a given loading than in a conical bottom, hence lighter material can be used, but the gravity drawoff is not so complete. When a number of such bins are necessary, as in cement storage, they are placed close together, and the space between is floored and utilized for additional storage (see Sec. 3A, Fig. 15).

Suspension bunker (Fig. 1, item *k*) puts all of the wall in tension and can be extended indefinitely at right angles to the section shown without any increase in weight of section, and without the loss in storage capacity that is attendant upon placing circular or elliptical bins side by side. It has been used extensively in fuel storage and handling plants; its use in milling work is increasing. It warrants investigation when the amount of storage needed per foot of length of mill is within the limits of its capacity. See Sec. 2, Figs. 20, 24.

Segregation within a bin occurs unavoidably when the material contains mixed sizes, coarse particles tending to roll outward on the cones or ridges of the more sluggish finer material while the bin is being either filled or discharged. Such segregation affects the weight per unit volume of material issuing from the bin, by amounts which may reach 20 to 30%, and usually (especially in the case of brittle ores) affects also the assay; both effects are detrimental to many milling and metallurgical operations. A mixture of coarse and fine is heaviest, all-fines is next, and all-coarse is lightest. Means for regulating bin discharge by weight are described in Art. 23. Segregation is least apt to occur (*a*) when material is all finer than about 1/4-in.; (*b*) when discharge is continuous at about the feed rate; (*c*) when the bin is so shaped as to avoid accumulation and packing of fines in corners and valleys, and to prevent bridging of damp or of de-aerated dry material over the discharge openings. None of the numerous mechanical devices intended to correct this latter difficulty is wholly satisfactory; jets of compressed air playing into the space adjacent to the bin outlet is one of the best means for preventing bridging of fine ore, but is ineffective with coarse material. Segregation due to irregular discharge may be diminished by providing hopper bottoms with unusually steep slopes (say 60°); a square bin with two adjoining vertical and two sloping walls, discharging at one corner, has some advantages, although it is more expensive per unit of capacity than a hopper with a central opening. A flat-bottom bin with closely spaced floor outlets discharging simultaneously or in rotation also reduces the opportunity for segregation, but it requires auxiliary collecting conveyors. Segregation of feed into a bin may be partially offset by providing aprons to transform a single cone into a ring, or a single ridge into two ridges, so that some of the coarse particles will roll toward the center of the bin.

3. DESIGN OF BINS

This problem involves the usual elements of determination of loads and design of members to bear them. Wear due to passage of material through the bin must be anticipated and structural members guarded against blows and abrasion that would weaken them. Determination of loads is by the same methods that are employed in the design of retaining walls. Many formulas and graphical methods have been proposed. Those

by Rankine, Coulomb, and Cain, summarized by Ketchum (*Design of walls, bins, and grain elevators*), are best known and should be investigated in the case of large and elaborate structures. The graphical method given below, based on Coulomb's theory of "maximum wedge thrust," is satisfactory for most cases.

Preliminary considerations are (*a*) required capacity in tons; (*b*) corresponding cubical content based on weight of filling (Table 1); space that cannot be loaded nor emptied

Table 1. Weights of bin-filling materials

Material	Condition	Weight per cubic foot, pounds
Ashes, coal	Dry, packed	40 to 45
Barite	Broken, loose	180
Cement	Clinker, broken	95
Cement	Ground, loose	50 to 56
Clay	Moist	120
Coal	Any size, broken, loose	45 to 60
Coke	Loose	23 to 32
Earth	Slightly moist	70 to 90
Earth	Soft, flowing mud	104 to 120
Gravel	Dry	120
Iron ore (hematite)	Loose	150
Lime, quick	Ground, shaken	64
Phosphate, rock	Ground, loose	75
Quartz	Pulverized, loose	90
Quartz	Pulverized, well shaken	105
Sand	Dry, loose, even sizes	90 to 106
Sand	Dry, loose, uneven-sized grains	117
Sand	Even sizes, voids full of water	118 to 120
Slag	Granulated	53 to 60
Slag	Bank, crushed	80
Stone, average	Crushed	95 to 100
Stone, heavy (trap, greenstone)	Crushed, loose	107

Note. Volume of broken rock in dumps and bins is from 1.6 to 1.9 times volume in place.

Table 2. Angle of repose of bin fillings = ϕ

Material	Condition	Angle ϕ, degrees
Anthracite	Broken, loose	27
Ashes	Dry	40 to 45
Cement	Dry	40
Cement	95% through 20-m. screen	37.5
Cement	96% through 100-m. screen, piled	*a*
Cement, clinker	Through 1 1/2-in. screen	33
Cement material, raw	90% through 20-m. screen	33
Cement material, raw	89% through 100-m. screen, piled	*b*
Clay	Damp	27 to 45
Clay	Wet	16 to 17
Coal, bituminous	63% through 10-m. screen	34.5
Coal, bituminous	98% through 100-m. screen	16
Coal, bituminous	Broken, loose	35 to 45
Coal, bituminous	Slack	37.5 to 45
Earth	Dry	29
Earth	Moist	45
Earth	Mud	17
Gravel	Dry	37 to 48
Gravel	Sandy	26
Iron ore, soft	Broken	35
Ore	Broken	45
Sand	Fine, dry	31 to 37
Sand	Wet	26
Sand	Very wet	32
Slag	Small sizes	45
Stone	Crushed, fines screened out	37 (average)

a Slope concave. Radius of curvature 78 ft. Angle 6° at 40 ft. horizontally from apex and 38.1° at apex. (*Ketchum.*) *b* Slope concave. Radius of curvature 7 ft. 9 3/4 in. Angle 5° at 5 ft. horizontally from apex and 43.3° at apex. (*Ketchum.*)

without shoveling; (*c*) location of bin and effect of topography on shape; (*d*) purpose of bin and effect of delivery requirements on shape; *e.g.*, the length of a bin to feed a battery of secondary crushers is determined to a considerable extent by the over-all length of the battery; (*e*) material of bin, *e.g.*, height and breadth of a timber bin are limited to a great extent by maximum sizes of stock timber, deep steel bins are more economically loaded and drawn than shallow ones, etc.; (*f*) angle of repose of material to be stored (Table 2); (*g*) angle of friction of material on bin walls (Table 3).

Table 3. Friction of bin fillings against walls = θ

Material	Condition	Angle of friction, θ, degrees *b*		
		Bin lining		
		Cribbed wood	Steel plate	Concrete
Anthracite	Screened	25	16 to 20	27
Ashes	Dry	40	31	40
Coal, bituminous	Broken	35	18 to 30	35
Coke	Mixed sizes	40	25 to 30	40
Gravel	Dry	.....	40	.....
Ore	Crushed and screened	40	30	40
Ore	Run-of-mine	45	35 to 40	45
Sand	Dry to moist	30 to 45	18 to 40	40 to 45
Stone	Broken	22 *a*	16.7 to 40	40

a With grain.

b Angles are increased by presence of large amount of fine, damp material. Range of figures, where given, represents limits of authorities.

Lateral pressure against bin walls, although not accurately computable on hydrostatic principles (due to internal friction and to friction against the wall), may be approximated by representing the contents of a bin as an EQUIVALENT LIQUID, of such specific gravity as will make allowance for internal friction. (Wall friction becomes an important factor only in deep, narrow bins, and is often neglected in design—see below.) C. O. Sandstrom (*45 CME 684*) offers the formula: $L = w(1 - \sin \phi)/(1 + \sin \phi)$, where L = weight per cu. ft. (or sp. gr.) of the equivalent liquid, w = that of the bin filling, ϕ = angle of repose of the filling. On this basis, weights of equivalent liquids for some common substances are given in Table 4. This approximation applies only to the vertical walls and not to the bottom of a bin.

Table 4. Equivalent-liquid weights of bin fillings (*Sandstrom*)

Material	Size	Lb. per cu. ft.	Equiv. liquid, lb. per cu. ft.
Ashes	<2-in.	40	9
Cement, portland	96% <100-m.	100	25
Cement, clinker	<1 1/2-in.	90	25
Coal, bituminous	<1 1/2-in.	50	13
Coal, anthracite	<1 1/2-in.	52	20
Coal, pulverized	98% <100-m.	44	15
Coke	<3-in.	30	7
Earth, dry	.....	100	22
Earth, mud	.....	110	60
Gravel	<1 1/2-in.	110	30
Limestone	<2-in.	100	22
Rock salt	<1/2-in.	48	16
Sand, dry	<1/4-in.	95	27
Sand, moist	.....	90	20

Graphical method of determining pressures on bin walls. If *ABCD* (Fig. 3) represents a transverse section of a flat-bottomed bin, broken rock, when poured therein, along the center line, will come to rest with inclined surfaces *BE* and *EC*. Angle *EBC* is known as the angle of repose (φ). Its magnitude depends on the friction between the particles of material and is different with different substances, sizes, mixtures of sizes, and moisture content. (See Table 2, compiled from various sources.) A heap of ore with cross-section *BEC* will exert no pressure on walls *AB* and *DC*. Side pressures are all taken up within the pile of material itself. Herein lies one of the differences between such materials, known as semifluids, and true fluids. If bin *ABCD* is charged level full, the mass of material will tend to rupture by sliding of the upper part over the lower along some plane such as *BF*, lying between *AB* and *BE*. The thrust of wedge *AFB* against wall *AB* is the pressure against the bin front, according to Coulomb's theory. This thrust is a maximum when *BF* bisects angle *ABE*. If wall *AB* is considered displaced a small distance to the left, wedge *ABF* will slide a small amount along *BF* and in coming to rest will exert a force *P* on *AB* that is the resultant of a force *N*, normal to the wall, and another, *F*, acting vertically downward in the plane of the wall. This latter force is due to friction between the material and the wall. The ratio F_1/N_1 is equal to the coefficient of friction of the filling on the bin wall. (See Table 3.) To determine *P*, consider a wedge of material having the section *AFB* and 1 ft. in thickness along the length of the bin, in equilibrium under the action of forces exerted by the wall *AB* and the

material lying to the right of BF. Lay off AN proportional to the weight of block AFB. The resultant of the reaction of the material to the right of BF on ABF acts in a direction inclined ϕ below the normal to BF. This will be $45 + \phi/2°$ below AF. Draw AX making angle FAX equal $45 + \phi/2°$. Through N draw NY so that angle θ is equal to the angle of friction (tan $\theta = \mu$ = coefficient of friction) between the material and the bin wall. (See Table 3.) NJ is the total pressure in 1 ft. length of wall AB, in magnitude and direction. The point of application is K located $2h/3$ downward from A. Normal pressure N_1 is the horizontal component of $P_1 (= NJ)$. Pressures on CD are the same. Total pressure on BC is the weight of block $ABCD$ and is uniformly distributed along BC. The distribution of pressure along wall $DC (= AB)$ is determined by placing $N_1 = 1/2\overline{CL} \times h$, solving for CL and completing the triangle as shown. Unit pressure at any point along DC can then be read off directly.

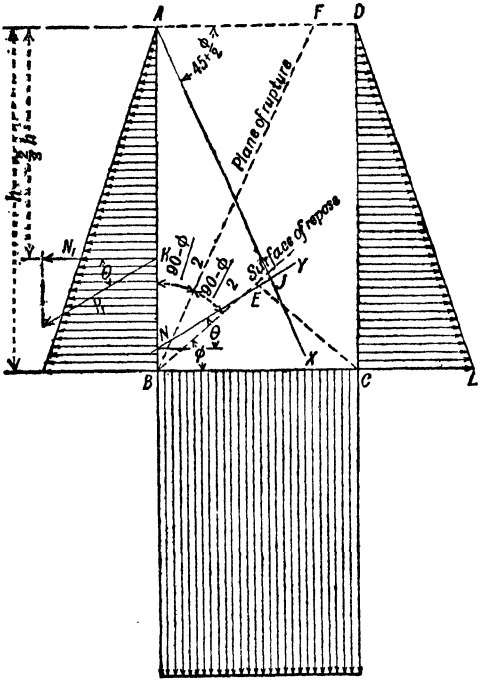

FIG. 3. Solution of stresses in flat-bottom bin, based on Coulomb's theory.

In a slanting-bottom bin (Fig. 4) take $\phi = 40°$, $h' = 8$ ft., breadth of bin = 12 ft., weight of bin filling = 100 lb. per cu. ft., and $\theta = 30°$. Solve for P_1 as described in the preceding paragraph. To determine P_2, draw $CN = RQ$, determine area DCN and lay off N_2 through the point of application, $2h'/3$ down from D. Through this point draw the line of action of P_2, making an angle $\theta (= 30°)$ with N_2, then complete the triangle of forces. Consider block $ABCD$, weighing W, in equilibrium under the action of the forces P_1, P_2, W, and P_3, P_3 being the total reaction of the bottom to the load, unknown in magnitude and direction. W acts through the center of gravity of $ABCD$, located at T. To solve for the magnitude and direction of P_3, lay off TS to scale, equal and parallel to W; SV equal and parallel to P_1, and VU equal and parallel to P_2; UT, closing the force polygon, determines P_3 in magnitude and direction. The line of action of P_3 is determined as follows: Choose any point O so that angles between lines OT, OS, OU, and OV are as large as conveniently possible. Choose any point such as b on the line of action of P_1 and draw lines vo and so parallel to OV and OS, respectively. Produce so to intersect TS, produced if necessary. Through this intersection draw to parallel to OT. Produce vo to meet line of action of P_2. Through the intersection draw uo parallel to OU. Produce uo and to to intersection. Through this intersection draw ut parallel to UT; ut is the line of action of P_3. To determine N_3 (= normal component of P_3), lay off P_3 along line ut from the point where ut cuts the bin bottom. Project this length onto a normal to the bin bottom through the same point and scale off N_3. To find the distribution of N_3 along the bin bottom, lay off the pressure trapezoid $BCaZ$ so that the area = N_3. Now $1/2(BZ + Ca) \times BC = N_3$ (Eq. 1). If BC and Za were produced they must meet at Y on AD produced, then

$$Ca/BZ = YC/YB \qquad \text{(Eq. 2)}$$

Scale YC and YB and solve for Ca in Eq. 2. Substitute in Eq. 1 and solve for BZ. Lay off $\overline{BZ}$ and ΔYBZ. Lay off Ca parallel to BZ and scale off or solve by the preceding equations.

Ketchum gives another method for this solution in which friction between the walls and material is disregarded. In bin $ABCD$ (Fig. 5) the total normal pressure on wall AB is $P_1 = 1/2wh^2 \dfrac{1 - \sin\phi}{1 + \sin\phi}$ acting through a point $2h/3$ below A, where w = weight of material in lb. per cu. ft. Similarly $P_2 = 1/2wh'^2 \dfrac{1 - \sin\phi}{1 + \sin\phi}$. To find total pressure on BC, produce BC and AD to intersect at J. Calculate weight of wedge $ABJ = 1/2\overline{AB} \times \overline{AJ} \times w = W$. This acts vertically downward through the center of gravity of triangle ABJ. Produce the line of action P_1 to intersect the line of action of W at K. Lay off KL to scale equal to W. Lay off LM equal and parallel to P. $MK = P_3$. Construct the normal component of $P_3 = N_3$. Construct ΔJBO so that area = N_3. CQ = unit pressure at point C. Area $BCQO$ = total normal pressure on the bottom per foot of length of bin. Lay off $CH = FQ$. Complete the pressure triangle DCH. Area DCH = total normal pressure on CD. Note that the assumption of smooth walls results in larger values for the pressures on walls and bottom than does the preceding solution.

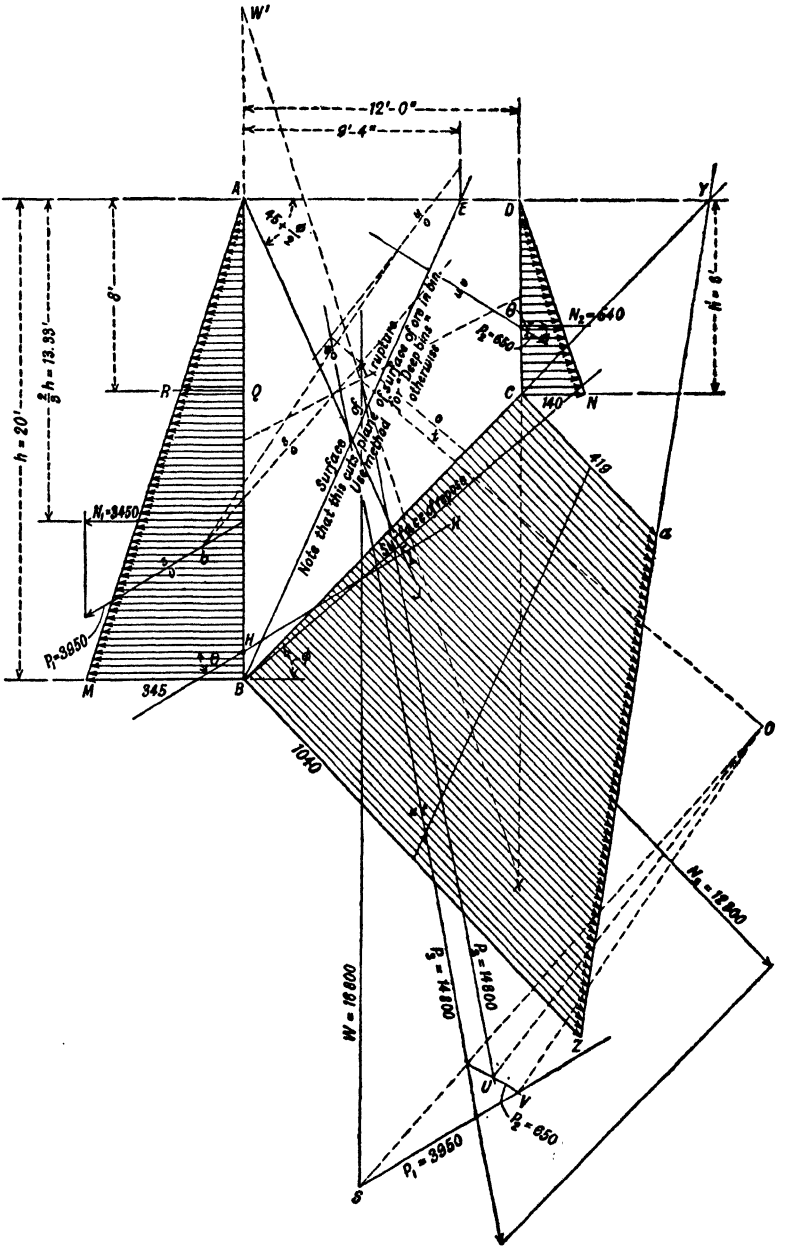

FIG. 4. Solution of stresses in slanting-bottom bin, based on Coulomb's theory.

Surcharged bin. Pressures on the walls of a surcharged bin are much greater than in one level full. Fig. 6 gives the pressure analysis for such a bin assumed surcharged at an angle equal to the angle of repose of the material ($= \phi$). Weight of filling = 100 lb. per cu. ft.; dimensions are shown; $\phi = 40°$. The resultant pressure on the bin wall for this condition is a maximum and is inclined parallel to the surface of the ore.

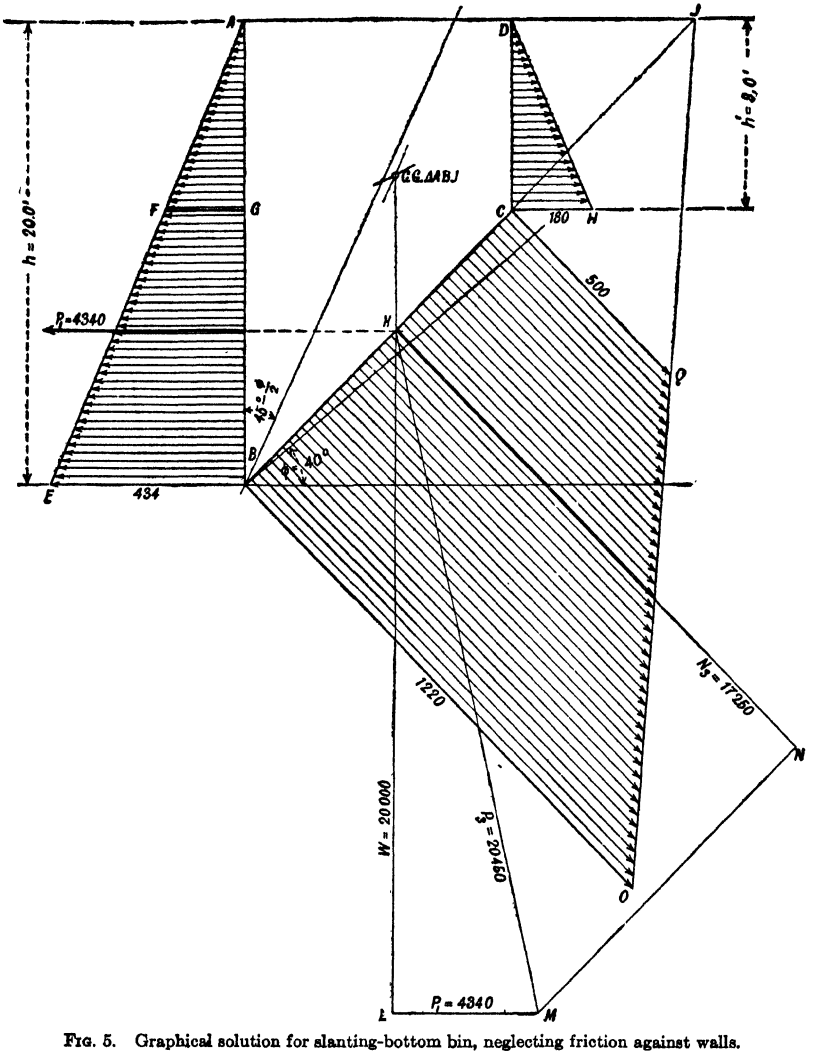

FIG. 5. Graphical solution for slanting-bottom bin, neglecting friction against walls.

TO DETERMINE THE PRESSURE AGAINST *AB:* Lay off *BX* parallel to *AM*. Draw *AE* perpendicular to *BX* and lay off *AF* so that angle $EAF = \theta$ = angle of friction between wall and filling. From *F* as a center with radius *FA* strike arc *AG* and draw the straight line *AG*. $P_1 = \Delta AGF \times w$. The point of application is $2h/3$ down from *A*. Lay off P_1 and the normal component N_1 in the usual fashion. Lay off the pressure triangle $ABH = N_1$. Lay off $CL = JK$ and complete the pressure diagram *DCL*. Area $\Delta DCL = N_2$. P_2 acts parallel to *MD* and is determined from N_2 as shown in Fig. 6. TOTAL PRESSURE ON BOTTOM may be calculated by assuming block *ABCDM* as a rigid body in equilibrium under the action of the nonconcurrent forces $-P_1$, $-P_2$, $W(=$ *area* $ABCDM \times w)$, and P_3. The method of solution is as described for Fig. 4 and is shown in Fig. 6, taking the center of force polygon *SUQR* at *T*. This assumption results in a value for P_3, in a bin of a given size, less than the value for P_3 in a bin level full, when calculated as in Fig. 5. FOR MAXIMUM PRESSURES ON BOTTOM, assume block

$ABCDM$ in equilibrium under the nonconcurrent forces N_1, N_2, W, and P_2 and solve for P'_2 and N'_2, as in Fig. 4. (To determine the center of gravity of block $ABCDM$, determine the centers of gravity of $ABCD$ (see Fig. 4) and ADM separately. Take moments around axes at right angles, for instance, lines HB and DC, and solve for the resultant moment arms.) To DETERMINE DISTRIBUTION OF NORMAL

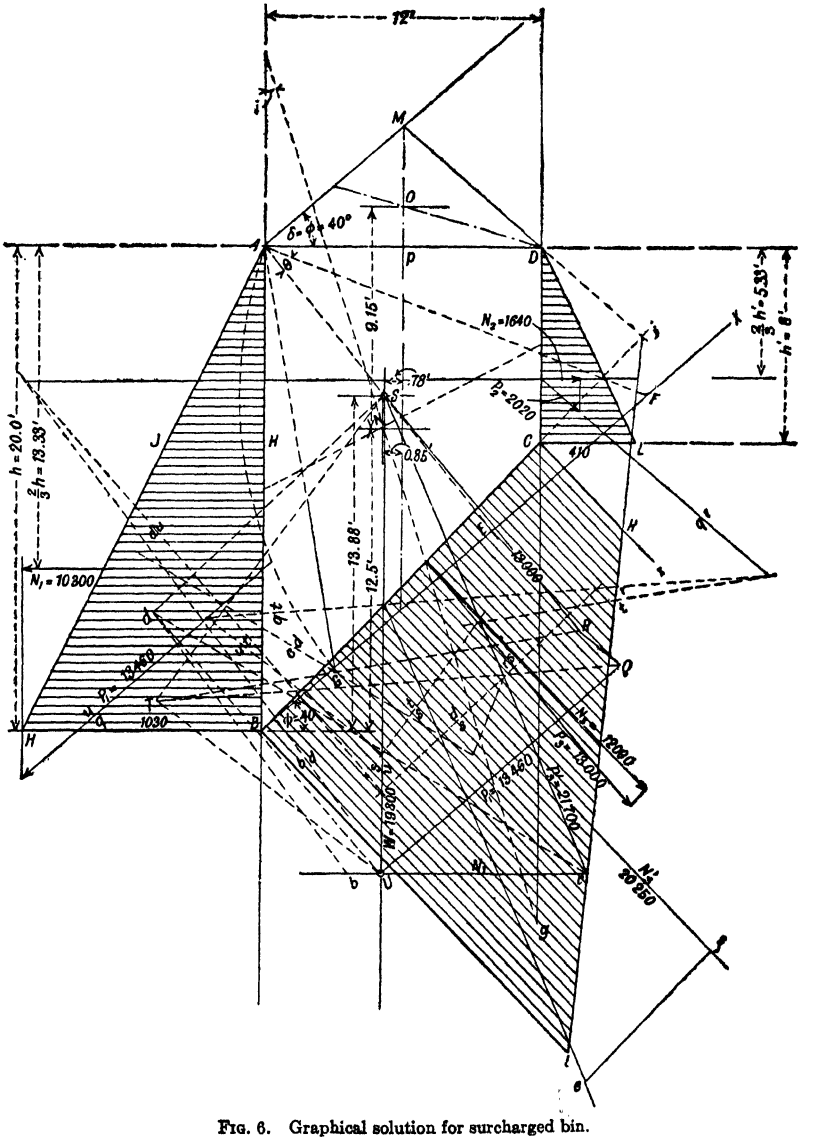

FIG. 6. Graphical solution for surcharged bin.

PRESSURE ON BOTTOM, produce MD and BC to intersect at j. Lay off the trapezoid $BCkl$ to equal N'_2 as follows: $Bl = \dfrac{2N'_2}{BC\left(\dfrac{jC}{jB} + 1\right)}$. Lay off Bl to scale, draw lj. Point k is determined by the intersection of Cx (parallel to Bl) with lj. The bottom pressure may also be determined by assuming a block $ABjM$ in equilibrium under action of forces W'' (= weight of this block), N_1 and P''_2, as in Fig. 5, and solving for P''_2, N''_2, and the pressure trapezoid as in that figure.

Deep bins. The preceding methods apply only to shallow bins, *i.e.*, those in which the plane of rupture cuts the surface of the filling material. In deep bins a large part of the vertical pressure is taken by the walls of the bin, which must, therefore, be designed to withstand the resulting compression. Either of two methods of solution is commonly used; both accord well with experimental results.

Janssen's method arrives at the equations:

$$V = \frac{wR}{k\mu'}\left(1 - e^{\frac{-k\mu' h}{R}}\right)$$

$$L = \frac{wR}{\mu'}\left(1 - e^{\frac{-k\mu' h}{R}}\right)$$

where V = vertical pressure in lb. per sq. ft. and L = lateral pressure in lb. per sq. ft. at any point on the bin walls; w = weight of filling material in lb. per cu. ft.; R = hydraulic radius of bin = area in sq. ft. ÷ perimeter in ft.; k = an experimental constant that can be approximated by the formula $k = \frac{1 - \sin\phi}{1 + \sin\phi}$ where ϕ = the angle of repose of the bin filling; $\mu' = \tan\theta$ = coefficient of friction of filling against bin wall (Table 3); h = depth in feet of the point investigated below the surface of the filling; e is the Napierian base.

Airy's method (*Proc. Inst. Civil Engrs.*, Vol. 131 [1897]) gives

$$P = \frac{wd(2h - d\tan x)(\tan x - \mu)}{2(1 - \mu\mu' + (\mu + \mu')\tan x)}$$

where P = total pressure on bin wall, d = breadth of bin, $\mu = \tan\phi$ = coefficient of internal friction of filling material, μ' = coefficient of friction of filling material on the bin wall, and x = angle that plane of rupture makes with horizontal = $45 - \phi/2$. P is a maximum when

$$\tan x = \sqrt{\left(\frac{2h}{d} + \frac{1 - \mu\mu'}{\mu + \mu'}\right)\left(\frac{1 + \mu^2}{\mu + \mu'}\right)} - \frac{1 - \mu\mu'}{\mu + \mu'}$$

hence the equation for $P_{max.}$ is

$$P_{max.} = \frac{wd^2}{2}\left[\frac{\sqrt{\frac{2h}{d}(\mu + \mu') + 1 - \mu\mu'} - \sqrt{1 + \mu^2}}{\mu + \mu'}\right]^2$$

and

$$L \text{ at any depth} = \frac{wd}{\mu + \mu'}\left[1 - \frac{\sqrt{1 + \mu^2}}{\sqrt{\frac{2h}{d}(\mu + \mu') + 1 - \mu\mu'}}\right]$$

V at any point $= L/k$.

Compression in bin walls at any depth y is given by *Ketchum* as

$$F = wR\left[y - \frac{R}{k\mu'}\left(1 - e^{\frac{-k\mu' y}{R}}\right)\right]$$

where F is the total compressive load in the plane of the wall per foot of length of bin and other factors are as defined above. When the height of the bin is more than twice the diameter (or breadth), this equation may be written without serious error,

$$F = wR\left(y - \frac{R}{k\mu'}\right)$$

Bins with conical bottom. In Fig. 7 to determine unit stresses T parallel to an element of the conical bottom across any section such as X–X, determine first the total vertical load W' acting at this section. In a shallow bin W' = entire weight of right cylinder of material whose base is the section X–X, plus the weight of the part of the bin below X–X and the contained material. In a deep bin $W' = \pi r'^2 V$ plus the weight of bin and material below X–X. In either case $T = W' \csc s/2\pi r'$. In the deep bin the weight of bin material and filling below X–X may be so small in relation to the total pressure that $T = Vr' \csc s/2$ is a satisfactory approximation. Unit stress T' in the ring X–X in a shallow bin is $T' = r'V\left\{\frac{\sin^2(s/\phi)}{\sin^4 s\left(1 + \frac{\sin\phi}{\sin s}\right)^2}\right\}$; in a deep bin $T' = Lr'$. (*Ketchum.*)

Bins with spherical bottom. Stresses in the bottom are calculated as in conical-bottom bins. Referring to bin in Fig. 8, unit stress T tangent to the bin bottom at X and in a plane through the bin axis is $T = W'/2\pi r' \sin^2 s$ and for a deep bin this may be approximated as $T = {}^1/_2 Vr'$. Tension in the ring cut by section X–X is $T' = {}^1/_2 Vr'$. (*Ketchum.*)

Suspension bunkers. In Fig. 9 let S = sag in feet, l = $1/2$ of span in feet, C = capacity in cu. ft. per ft. of length, P = maximum pressure, located at B, w = weight of filling in lb. per cu. ft., V = vertical component of force exerted by the bunker on supports at

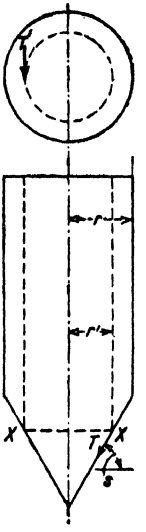

Fig. 7. Conical-bottom bin.

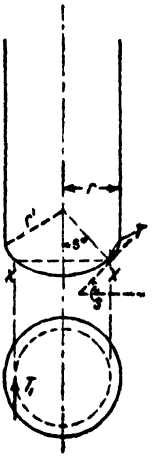

Fig. 8. Spherical-bottom bin.

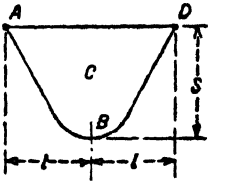

Fig. 9. Suspension bunker.

A and D, H = horizontal component of the same force, T = lb. maximum tension in plate per ft. of length of bin, L = length of curve AB. When the bin is level full, $P = 1.25Sw$; $H = Cwl/3S$; $V = 5Slw/8$; $T = Cw\sqrt{1/4 + l^2/9S^2}$;

$$L = \frac{1}{60l^2}[y_0 + y_{10} + 4(y_1 + y_3 + y_5 + y_7 + y_9) + 2(y_2 + y_4 + y_6 + y_8)]$$

where $y = 4l^6 + 9S^2(2xl - x^2)^2$. Substitute for x values 0, $l/10$, $2l/10$, $3l/10$, etc., to obtain values for y_0, y_1, y_2, y_3, etc., respectively. Table 5 gives values of L for values of the ratio s/l ranging from $1/3$ to $2/2$.

Notes on design. With loads known, the design and spacing of members to carry them is done by the usual methods. LINING must be provided wherever moving ore comes in contact with the bin structure. Walls and slanting bottoms are lined with hard pine or hardwood planking set usually with the length parallel to the run of the ore, or with steel plate or old rails, discarded crusher plates, roll shells, ball-mill liners, and the like. Walls of the 4,000-ton, rectangular, steel bin at INSPIRATION main shaft (*119 J 477*) were protected by a curtain composed of discarded 1 3/4-in. steel rope. Hardest wear comes just around the gates; special, easily removable wearing surfaces should be provided at these points. Steel-plate linings often tend to work loose and curl up at corners and edges; this can be prevented by cover straps (battens) bolted or riveted through both lining and outside plates or floor boards; only vertical seams should be thus treated. TENSION RODS running through timber bins should be placed just above or just below a timber. Timbers directly under loading points may be protected by iron straps bent over the top and spiked on with a space of 1 to 2 in. between straps. Steel members may be protected by riveting to their upper surfaces steel plates 1 to 3 ft. wide on which ore will collect and form a cushion. When ore is allowed to form the bottom in flat-bottom bins, the discharge-chute liner plate should be projected 2 to 3 ft. into the bin to make discharge easier. It is well to make the dimensions of a bin such that stock lengths of planking will not have to be cut on the ground. A change of a few inches one way or another in dimensions will ordinarily accomplish this. Where possible lay end and partition PLANKING so that it forms a tie between front and rear posts of bent, in order to gain added stiffness.

Table 5. Length of one-half curve of suspension bunkers = L. (*From Ketchum; Walls, Bins and Grain Elevators*)

$\frac{S}{l}$	L
1/3	1.06378l
1/2	1.13686l
2/3	1.22992l
3/4	1.28307l
7/8	1.36651l
1	1.45722l
6/5	1.61131l
4/3	1.71906l
3/2	1.85815l

Timber connectors have been employed for many years on notable wooden structures (towers, bridges, roof trusses, etc.) in Europe; they deserve consideration as a means of economy in construction of bins since they (*a*) permit substitution of two or more planks for a single, massive timber, (*b*) utilize

the longitudinal strength of timber to better advantage, (*c*) require smaller allowance for loss of compressive and shearing strength at joints, (*d*) reduce amount of framing at joints, although most of the connectors require special appliances during construction. The connectors are various-shaped pieces of metal (Fig. 10) inserted between contacting faces at a joint, which is then held together by one or more bolts. Some connectors have outward projecting corrugations or teeth on both sides, requiring a hydraulic or mechanical press for assembly; others serve simply as short dowels, requiring only a special tool to cut an annular groove on each face concentric with the bolt hole. In ring connectors, of the latter type, a narrow dove-tailed gap on one side of the ring permits the metal to yield enough to distribute the compressive and shearing stresses uniformly to the wood inside and outside of the ring. For safe working loads applicable to American woods, see *Modern Connectors for Timber Construction* (*Rept. 24, Nat. Comm. on Wood Utilization, 1933*); also publications of Timber Engineering Co., Washington, D. C.

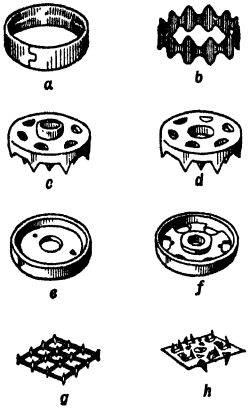

a Teco split ring, Tuchscherer type.
b Alligator toothed ring.
c Claw plate for wood only.
d Claw plate for wood to steel.
e Shear plate, pressed steel.
f Shear plate, malleable iron.
g Spike grid.
h Clamping plate.

FIG. 10. Timber connectors (*Timber Engineering Co.*).

Framed *vs.* connected-timber construction. Staley (*140 #9 J 45*) compared (see Table 6) the estimated costs of two bins, one framed as in Fig. 11, the other, of the same size and type but assembled with 4-in. split-ring connectors, 3/4-in. bolts (a few 1 1/8- and 1 1/4-in.), and 3 1/4-in. ogee washers. Fig. 12 gives details of the more important joints for the latter method of construction.

Examples of timber bins. In flat-bottom timber bins the bents are spaced 3-ft. to 6-ft. centers, depending upon the height of the bin and weight of filling; 2-in. and 3-in. plank are usual for front and back; 6-in. plank or 2 × 6 laid on edge are usual on the bottom. The flat-bottom bin lends itself to CRIBBED CONSTRUCTION, similar to that shown in Sec. 11, Fig. 7, which is much cheaper than the framed type since framing and expensive carpenter labor are eliminated, and the smaller sizes of lumber are cheaper per MBM than big sticks. Fig. 13 represents a 220-ton bin built of 8-in. round timbers notched at the corners, with the crevices chinked with 3-in. and 4-in. round poles. This particular bin had no gates but was unloaded by moving the 3-in. bottom planks along with a pick. With a full bin, ore piles up in the chute; a car is run under the platform at this point and planks are moved along toward the end of the platform until the edge of the pile is reached when, upon moving the next plank, ore will fall into the car. With the bin only part full, a man enters the bin through the chute and proceeds as before, first removing the plank nearest the pile of ore. Figs. 11 and 14 are typical slanting-bottom timber bins. The wide spacing of bents in Fig. 14 is made possible by the small height of the bin. Vertical timbers are carried through to the sills. This is the cheapest form of small wooden bin, but if adopted for a large bin it would require excessively large and expensive posts. In some cases, as at DOME, it is convenient to splice a small post to the upper end of a larger one, using a through tie-

Table 6. Framed *vs.* connected-timber bins

Framed bin (Fig. 11)	Bd. ft.	Connected-timber bin	Bd. ft.	% Saved
Front post..... 10×10×17′ 3″ / 10×14×4′	190	6×8×22′ 5″.....	90	52.6
Back post..... 10×10×21′ 3″..	177	6×8×22′ 5″.....	90	49.2
Floor beam..... 10×14×17′.....	198	Two 4×16×20′.....	213	−7.6
Diag. post..... 10×14×7′ 6″...	88	Two 4×12×10′ 9″.....	86	2.3
Sill..... 10×16×14′ 4″..	191	Two 4×12×13′ 10″....	111	41.8
Ties, front or back 8×8×19′.....	102	Two 3×6×18′ 3″.....	55	46.1
Ties, end..... 8×8×16′.....	85	Two 3×6×14′ 8″.....	44	48.2
Floor, sides, ends. 4×12 × random (per ft.).....	4	3×12 × random (per ft.).....	3	25.0
Total lumber (+10% for framing)	10,500	.....	7,300	30.5
Hardware.....	1,850 lb.	.....	1,570 lb.	15.1
Approx. cost:				
Lumber—10,500 bd. ft. @ $25/M.	$263	7,300 bd. ft. @ $25/M.	$183	.....
Labor—@ $20/M bd. ft.....	210	@ $15/M bd. ft.....	110	.....
Hardware—1,850 lb. @ 8 1/2¢....	158	*a*.....	168	.....
	$631		$461	

a Bolts, washers, and 380 split-ring 4-in. connectors @ 16 1/4¢.

rod to reinforce the splice. Fig. 15 illustrates a 16,000-cu. ft. bin at the MAGMA mine, receiving coarse ore from 3 1/2-ton cars and discharging by belt feeders to a conveyor; distinguishing features are the hoppered chute openings and the louvres. Fig. 39 gives details of the feeding mechanism of the same bin. Fig. 16 shows the double-hopper type of slanting-bottom bin with variation in size for heavy ore and light coke. The inward batter of the walls was found to facilitate discharge of unusually sticky ore sometimes encountered. Bin walls were 20 ft. high above the foundations; the width of the bins was

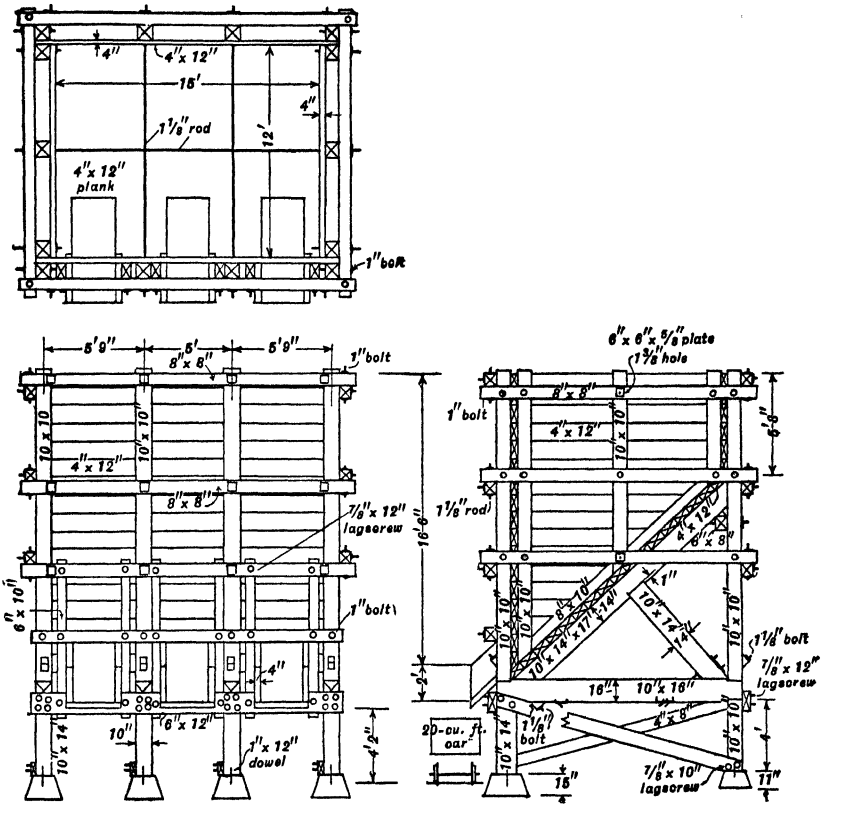

FIG. 11. Small framed-timber bin (*138 #10 J 48*).

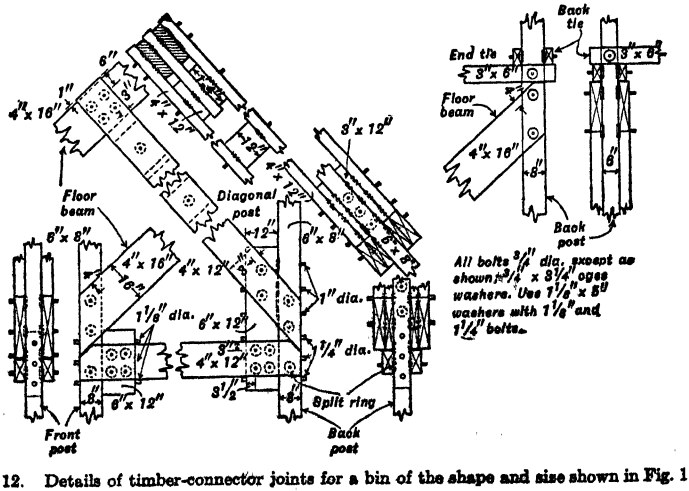

FIG. 12. Details of timber-connector joints for a bin of the shape and size shown in Fig. 11.

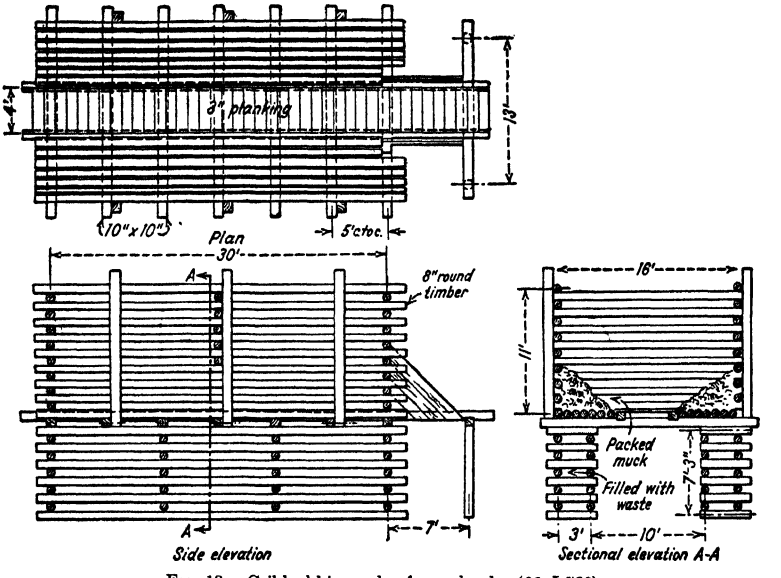

FIG. 13. Cribbed bin made of round poles (*98 J 739*).

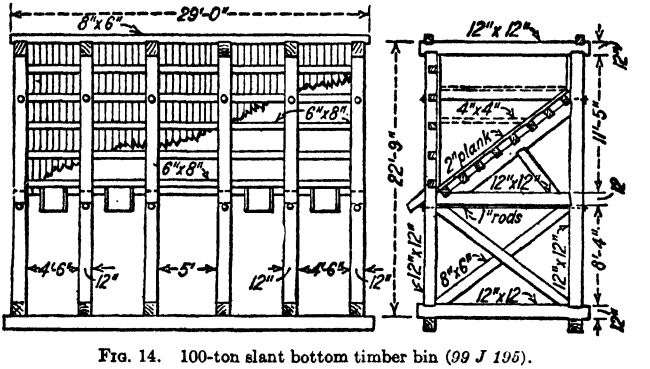

FIG. 14. 100-ton slant bottom timber bin (*99 J 195*).

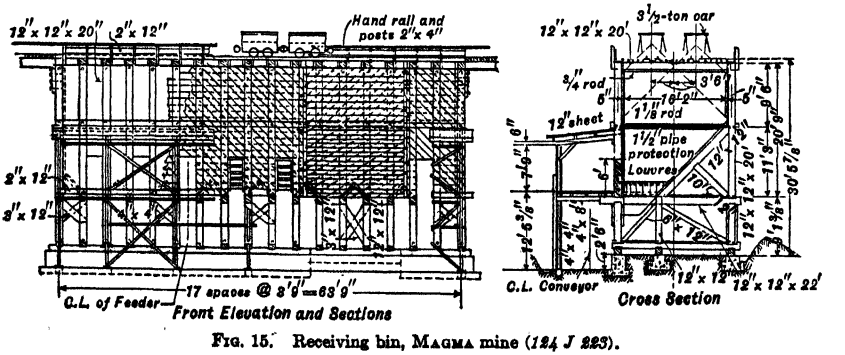

FIG. 15. Receiving bin, MAGMA mine (*124 J 223*).

30 ft. at the bottom; ore bins were 26 ft., and coke bins 44 ft. wide at the top. Experience elsewhere has confirmed the beneficial effect of inwardly battered walls upon flow of sticky ore; according to F. W. Collins (*PC*) a batter of only 1/2 i.p.f. is often advantageous. Fig. 17 is the cross-section of a bin

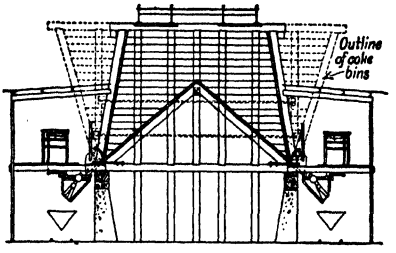

FIG. 16. Bins and weighing hoppers, OLD DOMINION smelter.

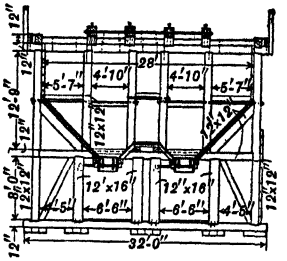

FIG. 17. Double-hopper timber bin at TENNESSEE COPPER CO.

at TENNESSEE COPPER Co. This bin is 168 ft. long with bents spaced 6-ft. centers. Fig. 18 shows a typical coal pocket designed for handling with minimum breakage; loading of the pocket is synchronized as far as possible with drawoff to minimize drop. Fig. 19 is typical of practice when product from a long bin is to be delivered at one point.

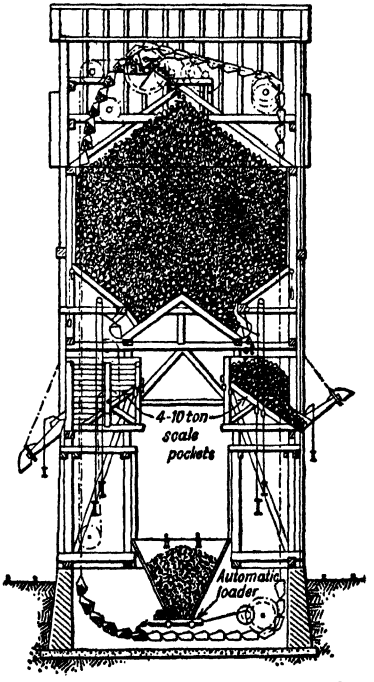

FIG. 18. Hopper-bottom coal-storage pocket, with bucket carrier, for car or truck loading.

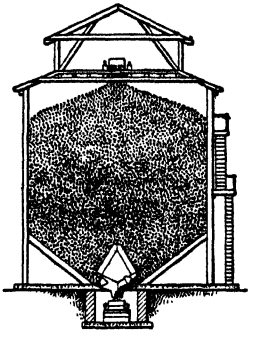

FIG. 19. Hopper-bottom bin with conveyor tunnel.

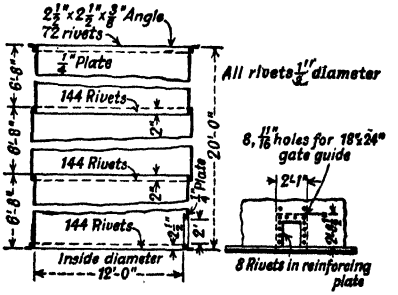

FIG. 20. Flat-bottom 100-ton circular steel bin.

Examples of steel bins. Fig. 20 shows a small circular steel bin with flat bottom and side discharge. It can be shipped knocked-down, punched, rolled, and nested. Central bottom discharge is more usual, since it gives a higher live capacity. Flat bottom circular steel bins in the Lake Superior copper-mine rock houses are 40 ft. diameter by 45 to 50 ft. high, built of 5/16- and 3/8-in. plates. Fig. 21 is a small rectangular bin with flat bottom. Such bins are uneconomical in use of steel as compared with round bins. At TIMBER BUTTE (*116 J 549*) steel bins 25 ft. diamster and 32 ft. high were set on a V-shaped concrete bottom of two slabs sloping 40°.

At WRIGHT-HARGREAVES (*140 #3 J 34*) two adjoining 32-ft. circular steel bins hold 2,000 tons of <1/4-in. ore. To reduce idle volume, the bottoms of the bins are arranged in parallel steps, 3 ft. high,

the lowest bench being 30 ft., and the highest 24 ft. below top of the bin. Chutes, 14×16-in., are spaced along the center line of each bench, four chutes on the middle bench, three on each of the others. The chutes of both bins discharge onto three parallel belt conveyors which deliver to a cross-conveyor at one end.

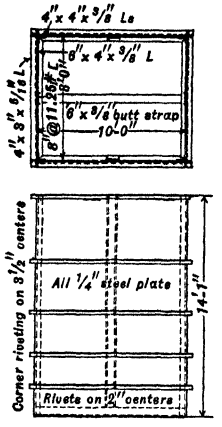

FIG. 21. Flat-bottom 50-ton rectangular steel bin.

Fig. 22 illustrates the 4,000-ton bin at the main shaft of the INSPIRATION CONSOL. COPPER CO. (*119 J 484*) receiving ore by standard-gage RR. cars and delivering by pan conveyors to the mill. It is essentially a flat-bottom bin, although sides, ends, and bottom are all composed of cylindrical segments.

Suspension bunkers. Fig. 23 (*118 J 566*) shows two typical steel suspension bunkers for ore. The INSPIRATION bin is 330 ft. long with a nominal capacity of 40 tons per running foot. Columns are spaced 16 ft. 8 in. longitudinally and draw gates are at the halfway points between columns. The NEW CORNELIA bin is 330 ft. long; nominal capacity is 33 tons per running foot, columns are spaced 20 ft. longitudinally and gates on 10-ft. centers. The dotted lines in the drawings show the positions assumed by the loaded bins. At NEW CORNELIA the distortion strained the hopper fastenings badly. A similar bin 448 ft. long, 32 ft. wide, and 34 ft. deep with a capacity of 35 tons per running foot was built at MORENCI (Sec. 2, Fig. 28). Supporting columns are on 18-ft. 8-in. centers longitudinally. Two intermediate expansion joints were provided. Design of suspension bunkers is largely indeterminate, and final designs should not be accepted without check against existing installations.

Baker suspended bins. Fig. 24 (*97 J 908*) shows several types of a modification of the ordinary suspension bunker, in which a rigid bottom is carried on a series of transverse triangular frames hung by suspension rods from the main supports; the walls are supported against these rods. The cut shows wood, reinforced-concrete and steel sides.

Design of large steel bins will usually be most economical if the bin is considered a unit of specified over-all dimensions, capacity, and receiving and delivery limitations, and the detailing is done by the steel company that is awarded the contract. Most large steel companies now have designers more experienced in ore-storage problems than the ordinary mill designer is experienced in steel construction.

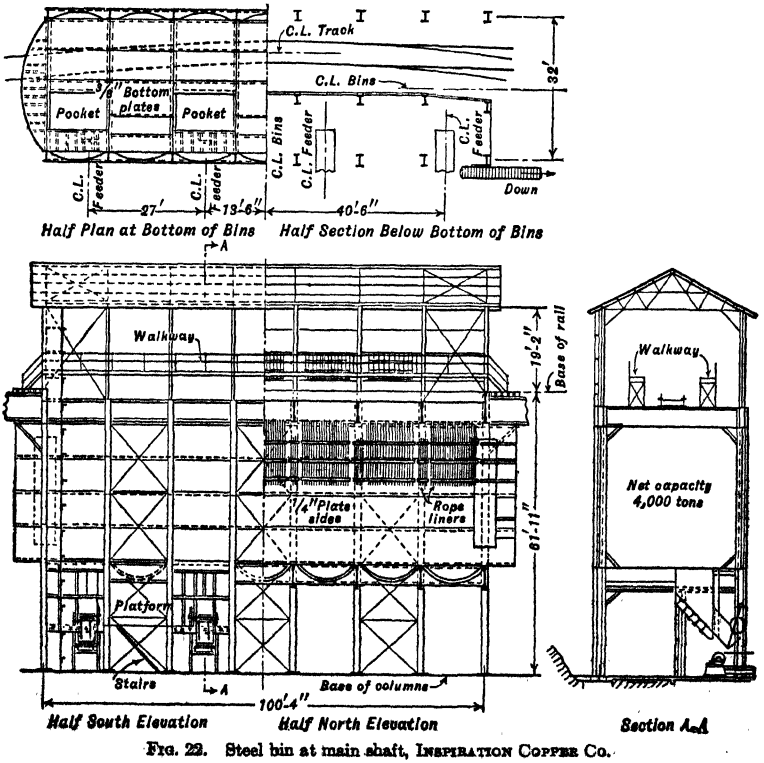

FIG. 22. Steel bin at main shaft, INSPIRATION COPPER CO.

Examples of concrete bins. Fig. 25 shows a circular reinforced-concrete bin built by WITHERBEE, SHERMAN & Co. at Mineville, N. Y., for crude-ore storage. The live capacity was about 1,000 tons. The foundation block was of coarse stone bonded with a 1 : 10 mixture of cement and fine tailing; the wall mixture was 1 : 4 cement and fine tailing. Reinforcement, placed 4 in. from the outside of the walls, consisted of horizontal hoops of worn 1 1/8-in. hoisting cable, spaced as shown, with vertical

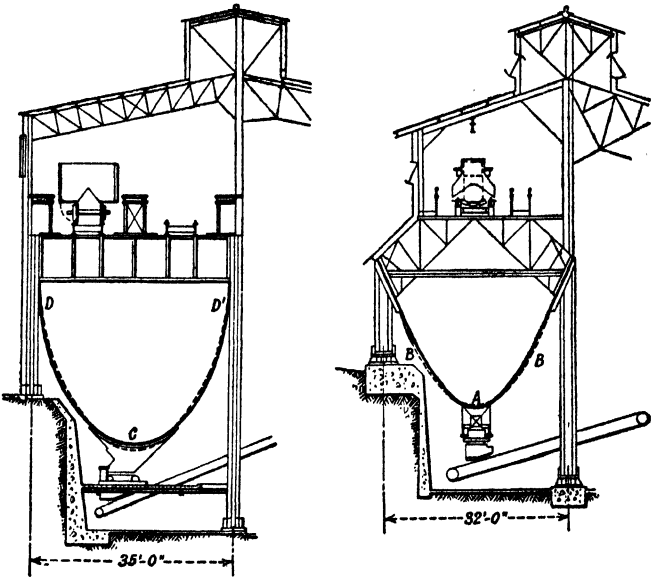

INSPIRATION NEW CORNELIA

FIG. 23. Steel suspension bunkers.

cables at 4-ft. centers wired to the hoops. The bin was filled to the discharge point with barren rock before ore was run in. Fig. 26 (*71 EN 1234*) shows another bin of the same type but with central bottom discharge. Vertical reinforcement consisted of 1/2-in. round rods spaced 18 in.; horizontal, of worn 3/4-in. cable spaced 4 1/4 in. for the bottom 5 ft., 6 in. for the next 10 ft. and 9 in. to the top. Cables were lapped 3 ft. at the joints, raveled and clipped; vertical rods were lapped 2 ft. at the joints. The concrete mixture was 1 : 3 : 6 for foundation and 1 : 2 : 4 for walls; the maximum size of stone used was 2 1/2-in. Fig. 27 (*96 J 305*) shows a rectangular hopper-bottom bin reinforced with corrugated

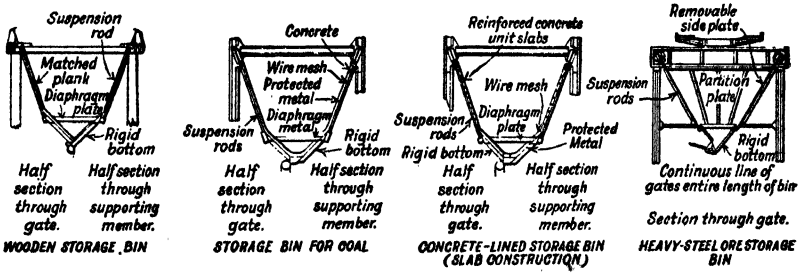

FIG. 24. Baker types of suspended bins.

bar and complicated interlocking hooks. The mixture was 1 cement, 2 sand, and 4 mill tailing about 1/2-in. size. Shallow cylindrical bins for fine materials may be made cheaply by setting up a frame of expanded-metal lath, properly reinforced, and plastering inside and out with sand-cement plaster. Such bins cannot, however, be made to bear any heavy superstructure.

Feed to bins should be so designed in relation to the horisontal dimensions as to produce maximum live load for a given wall height, with minimum size segregation. Bins that are roughly equidimensional in plan and relatively deep may be center fed, if of small

diameter, and supercharged, if headroom is available and design is suitable. Long bins are usually fed by a conveyor along the longitudinal center line with a traveling tripper having a 2-way spout. Large, relatively shallow and relatively equidimensional bins require sufficient superelevation of initial feed point to permit splitting of the feed stream and spouting toward the walls, or feeding by parallel conveyors with trippers, or the use of throw distributors, if marked loss in live capacity is to be avoided.

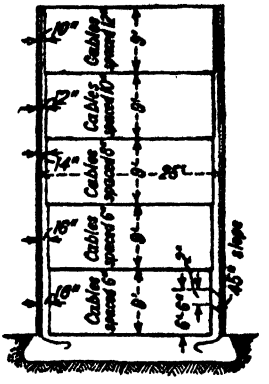

FIG. 25. Circular reinforced-concrete bin (*91 J 704*).

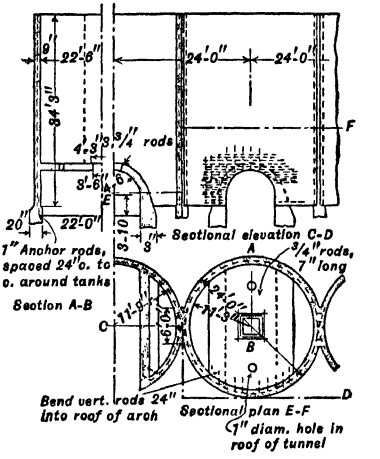

FIG. 26. Concrete bins at CROTON IRON MINES.

Control of feed to bins. At the Iron Knob mine of the BROKEN HILL PROPRIETARY CO., where a comparatively small (300-ton) surge bin receives the direct discharge of 9-in. material from a 60×84-in. jaw crusher, the possibly disastrous effect of choking the crusher by supercharging of the bin was guarded against by hanging a pendulum in such position that it would be laterally displaced by the pressure of ore rolling down the pile when the latter reached a predetermined height. In this case, visual inspection was impracticable. Displacement of the pendulum was transmitted through rods and levers to a switch (protected by dash-pot delay mechanism against momentary or accidental motion) in the power line supplying the car-dump motor ahead of the crushers. The same principle was also applied to other bins at subsequent points in the crushing scheme (*31 CEMR 128*).

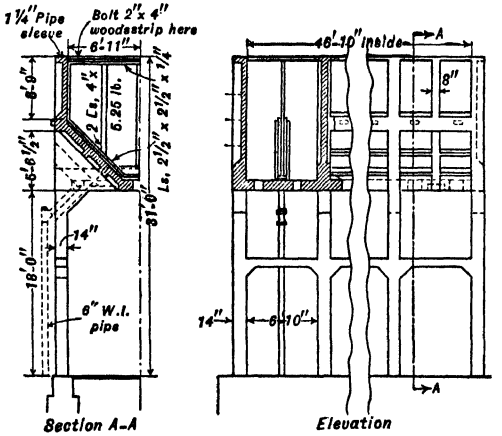

FIG. 27. Reinforced-concrete tailing bin, ST. JOSEPH LEAD CO.

At WRIGHT-HARGREAVES (*140 #3 J 34*) an 8-ton surge bin, feeding three ball-mill circuits, receives ore via belt conveyors from two 1,000-ton mill bins. An electric eye is installed to catch a beam of light thrown across the top of the bin, interruption of which stops the conveyors when the bin is full. Details of the electric relay system, by which feeding is automatically resumed, are given in the reference.

4. DISCHARGE FROM BINS

Bins are discharged through openings in the bottom or at the bottom of the side walls. The size of opening is made adjustable by means of gates. Rate of discharge in mill work is normally regulated by a feeder. The minimum size of discharge opening should be not less than three times the maximum dimension of particles passing through, if the

material is sized; nor less than twice the maximum dimension when material is a mixture of coarse and fine. These minimum dimensions will usually be greatly exceeded in fine-ore bins; with run-of-mine rock special provisions must be made to control the flow of material through such large openings, and the subsequent chutes and conveyors must be correspondingly large, so that there is always a tendency to cut down dimensions, with resultant clogging and lost time.

Gates. The type used depends on the size of material, destination, and regularity of discharge. When material contains large lumps, a gate that readily cuts completely

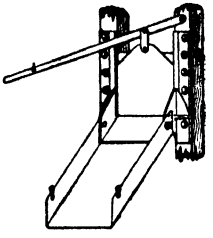

FIG. 28. Lever slide gate.

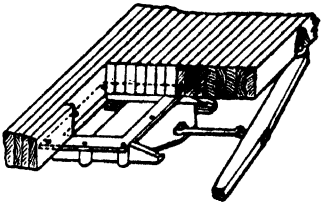

FIG. 29. Standard bottom-draught bin gate.

across the stream is wanted; if the destination of the discharged material is a car, a quick, wide-opening gate is desirable; if discharge is highly intermittent, a gate that opens and closes readily and quickly is necessary, while for regular discharge a slow-opening gate may be used and it is not so important that it be easily moved. Usual types are: (*a*) Sliding gates that move in grooves set into bin walls or bottom; these gates are hard to open when the pressure of the filling against them is great, and under such conditions must be geared down so much that they are slow (*b*) Cutoff gates, that present a portion of a cylindrical surface to the stream of ore, usually in a chute. Either the convex or the concave surface may be presented. (*c*) Finger and hammer gates, for coarse ores. (*d*) Chain or curtain gate for coarse and mixed ore. (*e*) Lifting chute or apron gates.

Slide gates. The LEVER SLIDE GATE, Fig. 28, is the simplest of this type. Ordinary sizes are 12×15- and 12×18-in. It is not suitable for heavy pressure and is difficult to close tightly when the ore contains both coarse lumps and fine material, as a lump caught under one side will stop the gate and hold it open, allowing fine material to run until larger pieces bridge the opening. For heavier service, up to 36×36-in. size, the slides are made with rollers against which the gate works. Fig. 29 shows a

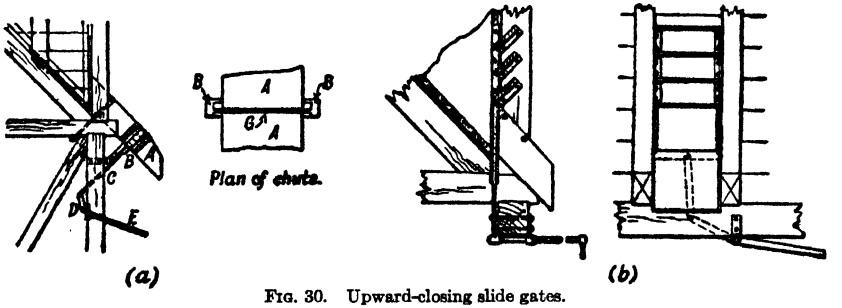

FIG. 30. Upward-closing slide gates.

similar gate for bottom draught. Usual sizes are 12×12- and 12×18-in. A bottom-draw valve for fine concentrate may be made of ordinary 6-in. pipe and fittings and strap iron (*90 J 704*). Fig. 30 shows two forms of upward-closing slide gates. These have the advantage over the downward-closing gate that they will not jam against lumps in closing. They have the disadvantage, however, that fine material causes wedging in the slot through which they work and that wear on this slot is excessive. RACK-AND-PINION gate, Fig. 31, is perhaps the most widely used of all types on small bins. While slow and sometimes difficult to move, it is easy to regulate closely and a pawl on the pinion will hold it in any position desired. The usual size range is 18×18- to 30×36-in.; corresponding weights are 250 to 450 lb. A double rack is used for very heavy service; some have roller slides and chain-controlled hand wheel; some also have a worm gear on the pinion shaft for exertion of additional force. Fig. 32 illustrates the use of air for operating sliding gates; these gates are quick-opening even under heavy

At WITHERBEE, SHERMAN & CO. the gate for a lump-ore (6-in. to 2-ft.) bin was 4 ft. 8 in.

square, made of 2-in. plank faced both sides with 1/2-in. plate, weighed 1,300 lb., operated under 60-lb. pressure, and was capable of crushing large lumps that wedged under it. It was run on rollers (*89 J 809*).

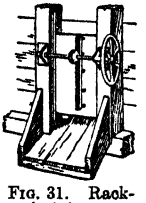

FIG. 31. Rack-and-pinion gate.

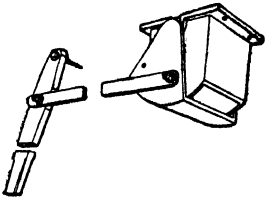

FIG. 33. Standard bottom-draught arc cutoff gate.

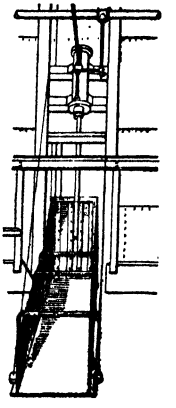

FIG. 32. Air-operated slide gate.

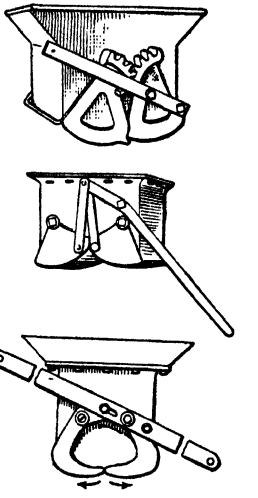

FIG. 33A. Duplex bottom-draught arc cutoff gates.

Arc cutoff gates are used both for bottom draught and side draught. Fig. 33 shows a standard bottom-draught type made in 10×10-, 15×15-, and 20×20-in. sizes. This gate is not hard to open, and is easy to close, but may catch against a large lump and therefore not cut off quickly. This same gate is made for side draught. Fig. 33A shows three types of duplex bottom-draught arc gates. These are made in sizes from 12×12- to 26×26-in. The gear type is the least rugged of the three.

Fig. 34 shows details of a particularly rugged type of arc gate for side draught, used at CANANEA CONS. COPPER CO. (*92 J 933*). These gates should be so set as not to back into the ore when opening yet to run with the stream to some extent in closing. When so arranged, they are readily and quickly opened and closed and are the best kind for intermittent service such as loading cars from a bin front.

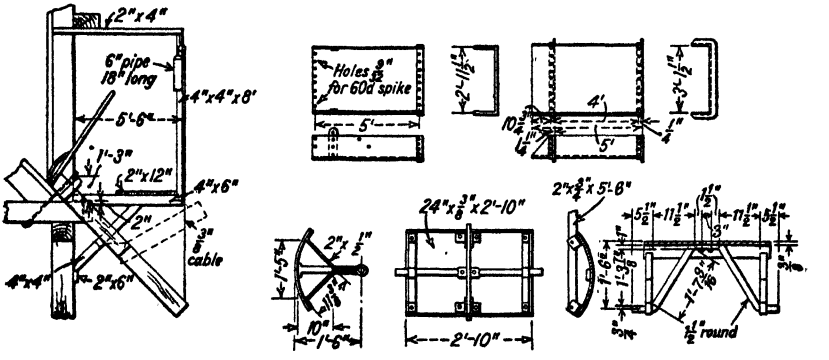

FIG. 34. Side-draught arc gate, CANANEA CONS. COPPER CO.

They operate most easily if the axis of rotation is set a little below the level at which the arc meets the chute bottom. Fig. 35 shows one of these gates arranged at the lower end of the bin chute, instead of at the bin wall. There is less pressure against the gate in this position, and hence it will be more readily opened. When open, one side of the sector forms part of the chute bottom. This type of gate cannot jam in closing, but is likely to cause material to jump out of the chute when it begins to close. The gate may be air-operated. Fig. 36 (*94 J 64*) is a geared concave form for coarse ore, designed to open

downward. It does not jam in closing but will cause fast-running lumps to jump as it begins to close. As it fails to open fully, a layer of ore is kept in the bottom of the chute, thus protecting the latter from wear.

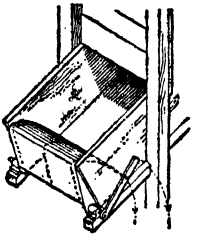

FIG. 35. Convex arc gate in chute (*92 J 740*).

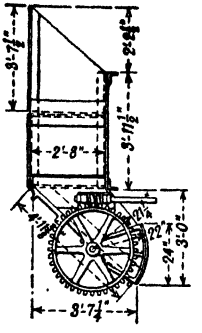

FIG. 36. Geared undercut concave cutoff valve, side-draught type.

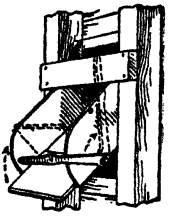

FIG. 37. Flap-valve bin gate.

Flap-valve gates. Fig. 37 shows the simplest form; it opens and closes readily and quickly, but is subject to wear by discharging material, particularly at the crack in the chute bottom. An air-operated form was used at QUINCY MINING Co. (*98 J 827*).

Finger gates are particularly useful in discharging coarse ore. Fig. 38 (*97 J 856*) shows an air-operated form with all fingers operated together. Fingers are sometimes arranged for independent operation; this allows closer regulation of coarse material than is possible with any other type of gate.

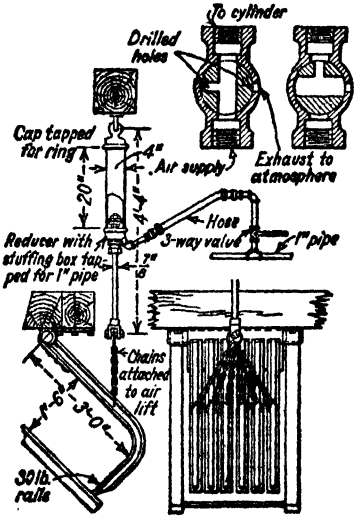

FIG. 38. Air-operated finger gate.

Swing-hammer gate is similar in principle to the finger gate, and may be used with or without an automatic feeder; Fig. 39 shows its application to a mill bin (Fig. 15) at the MAGMA mine.

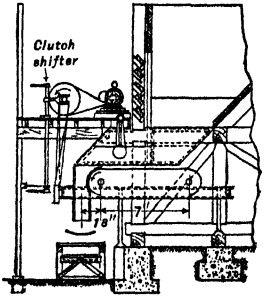

FIG. 39. Swing-hammer gate at MAGMA.

Ross chain or curtain gate consists of short sections of extra heavy chain, each with a cast-iron ball attached to its lower end, closely spaced in a row across the chute opening, and suspended in such position that they rest upon a bank of ore standing only slightly steeper than its angle of repose. Flow of ore under the chains is regulated by adjusting the height of the balls by means of light bridle chains also attached to them. This is one of the most satisfactory gates for discharging ore varying widely in size, since it is possible to bar through a large lump without causing a rush of fines. For further modifications of this device to act as a feeder, see Art. 22.

Jamming at bin discharge occurs either by reason of bridging of large lumps or by compacting of moist material under the pressure of the overlying filling; fine, dry material, if de-aerated by long standing under pressure, is equally troublesome. The usual cures are barring through the open gate,

sledging the outside face of the bin around the gate opening, and dynamite. Electromagnetic vibrators of the general electrical types used on electrical vibrating screens (Sec. 7, Fig. 36) are available in sizes weighing from 20 to 150 lb. or more, with proportionately powerful impacts. These are attached to the wall or bottom of the bin in the position which trial shows most effective. They are reported to maintain flow under difficult conditions. Power consumption of the largest size is less than 1 kw.

Louvres. Much trouble due to bridging can be saved by means of openings in the bin walls that give access to the material immediately around the gates. Fig. 40 (*122 P 593*) shows the method applied to a hopper bottom; it may be similarly applied to a vertical wall, as in Fig. 39. In either case the angle θ should be less than the angle of repose of the filing. A further development of the louvre

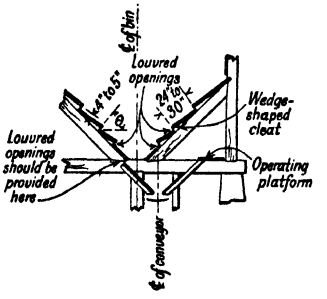

FIG. 40. Louvres in hopper-bottom bin.

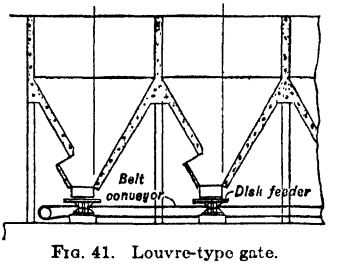

FIG. 41. Louvre-type gate.

principle is shown in Fig. 41, a construction popular in Europe, and not necessarily limited to concrete construction. The old idea illustrated in Fig. 42, using an auxiliary hopper to receive the otherwise unrestricted outflow of a bin, has proved well adapted to the handling of flotation concentrates. Another expedient, sometimes helpful, is to place the gate in a chute some 3 or 4 ft. down from the bin instead of at the top; when the gate is opened, ore held in the chute will usually start freely; if ore from the bin fails to follow at once, it is easily accessible for barring; stop boards are advisable with this arrangement. At some Lake Superior rock houses bins for coarse ore have two gates in the same chute, the lower one so placed that it will stop flow through the upper; this permits opening the other wide in case it clogs; the arrangement also allows stopping the stream for picking.

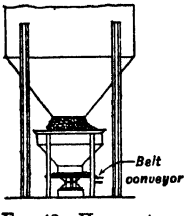

FIG. 42. Hopper-type bin gate.

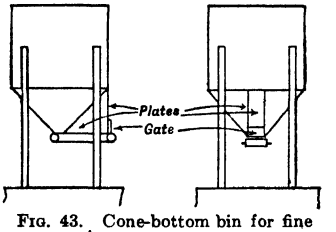

FIG. 43. Cone-bottom bin for fine heavy concentrate.

Moist material, especially when fine, may have an angle of repose of 90° or more and a sliding angle against wood or steel almost as great. The most difficulty is met in storage bins following intermediate crushing and those for mixed granular and flotation concentrate. Compressed air is most effective for starting such material. In bins a series of perforated compressed-air pipes set vertically and extending nearly to the bottom will, when blown, break up most hang-ups. Elsing (*89 J 203*) describes the use of a pointed 9-ft. length of 1 1/4-in. pipe supplied with air at 80 to 90 lb. per sq. in. pressure for unloading fine gravity concentrate from cars. Prior to its use it required 60 to 90 min. to bar material out of a 6-car train; with it, 15 to 20 min. was sufficient. Fig. 43 shows the manner in which a conical-bottom bin for fine, heavy concentrates, found troublesome to discharge from a central opening, was reconstructed by cutting a vertical slot the full height of the cone and supplying side and end walls to confine the outgoing ore to a rectangular space, of which the whole bottom was occupied by a belt or apron feeder; results were satisfactory.

For feeders applied to the discharge of bins, see Arts. 22 and 23.

5. GROUND STORAGE (STOCKPILING)

Applicability. Ground storage, or stockpiling in the open air, may be advantageous under one or more of the following conditions: (*a*) Cheap, bulky materials—crushed stone, sand, gravel, oyster shells, etc.—not warranting cost of bins. (*b*) Large volume of material—anthracite, wet phosphate concentrates, etc.—entailing prohibitive cost for adequate bins. (*c*) When advisable to insure uninterrupted supply to a treatment plant

working at large daily capacity—cement works, phosphate driers, chemical and metallurgical plants. (*d*) When receipt or delivery of material is seasonal or widely fluctuating—raw or washed Lake Superior iron ores, anthracite, crushed rock and gravel. (*e*) When several bulky ingredients are to be mixed before treatment or delivery—copper, lead, and iron ores, concrete aggregates blended to specifications; mixing may occur during the making or the reclaiming of the stockpile. (*f*) Certain metallurgical products (including some of high value) not damaged by weather and occurring in large heavy lumps unsuited for bin storage. (*g*) Medium- or low-grade mill products reserved for possible retreatment. In general, stockpiling is seldom employed at ore concentrators except at some of the iron-ore washers on the Mesabi Range where climatic and shipping conditions make it advisable to stockpile concentrates. If size segregation (Art. 2) must be avoided, material going into the same stockpile (by whatever method) should have a size ratio preferably not exceeding 2 : 1.

Building stockpiles is done by: (*a*) Direct fall from screen or washer—stone, sand, gravel. (*b*) Dumping cars or trucks from a trestle. (*c*) Unloading cars or barges by clamshell crane. (*d*) Transferring from temporary open-bin storage by crane. (*e*) Belt conveyor, with or without tripper, mounted in fixed position, on a swinging boom, or on a laterally traveling bridge. (*f*) Cable or drag scraper, or bulldozer, usually auxiliary to other equipment and helping to extend the available area of storage.

Reclaiming from stockpiles is accomplished by: (*a*) Power shovel or clamshell crane, delivering to cars, trucks, or hoppers; some of these devices serve as both excavator and carrier. (*b*) Belt conveyor traversing a tunnel beneath the pile, fed through overhead chutes, and usually transferring to another conveyor or an elevator for final disposal. (*c*) Portable loaders, usually of flight-elevator type, delivering to cars or trucks. (*d*) Scraper or bulldozer for bringing outlying material to within reach. (*e*) Special and elaborate mechanical systems of scrapers, elevators, and conveyors designed primarily for chemical and metallurgical plants; parts of such a system may serve for both stocking and reclaiming.

Relative merits of the five common methods applied to stockpiling and reclaiming of gravel and crushed stone are evaluated by N. Severinghaus (*44 #4 RP 49*) as follows, lower numbers being the more favorable:

	Belt conveyor	Cable and drag scrapers	Clamshell crane	Cars or trucks	Bulldozer
First cost	5	1	4	3	2
Operating cost	1	3	2	4	5
Breakage of stone	1	4	2	3	5
Flexibility in amount of storage	5	3	4	1	2
Flexibility in hourly capacity	1	3	3	2	3
Operating labor required	1	2	3	5	4
Ease of changing location	5	3	4	2	1

Examples. The following cases illustrate a variety of methods.

Iron ores. MESABI CHIEF mine, Keewatin, Minn. (*16 MMt 334*), stocks a maximum of 100,000 tons of washed ore in a circular pile 55 ft. high and of 165-ft. radius by a Link-Belt system including the following series of belt conveyors: (1) A self-contained shuttle receiving all or none of the washed product (in the latter case, the product goes direct to shipping bin): width, 30 in.; speed, 350 f.p.m.; driven by 10-hp. motor through herringbone reduction and roller chain. (2) Main conveyor, 30-in. × 258-ft., on a steel trestle with one center support; inclination, 5° (20 1/2 ft. total rise); 370 f.p.m.; driven by 20-hp. motor through herringbone reduction; gravity take-up for belt tension. (3) Distributing conveyor (24-in.) receiving ore from the preceding through a circular hopper; 470 f.p.m.; driven by 10-hp. motor through worm gear and tandem pulleys. This conveyor is mounted on a boom 93 1/4 ft. long, sloping 12° upward, and capable of swinging a horizontal arc of 240°; it is anchored at the desired position by guy ropes. Auxiliary head pulleys on the conveyor permit shortening its run, in order to fill space within the outer circle of ore. Reclamation is by a revolving traction shovel.

For reclaiming from a stockpile of iron-ore concentrate at the HARRISON washery, Mesabi Range, the Athey Mobiloader has been employed (*142 #1 J 39*). Model D8 machine is a caterpillar-mounted mechanical shovel, resembling some underground ore loaders in that it discharges its load by lifting and throwing overhead to the rear, but differing in that the whole machine traverses the space between loading and discharge points. Two tests with a 3 1/2-cyd. dipper, loading 75-ton RR. cars on tracks parallel with the toe of the stockpile and at distances, respectively, of 90 and 80 ft., gave the following results: (*a*) 61 trips to load 4 cars averaging 69.5 long tons; average load per trip, 4.41 tons; average time for round trip, 0.96 min.; best time, 0.85 min. (loading, 15 sec.; moving load, 18 sec.; dumping, 6 sec.; returning, 12 sec.); rate, 277 long tons per hr. (*b*) 107 trips to load 7 cars averaging 73.1 long tons; average load per trip, 4.78 tons; average time, 51 sec.; best time, 46 sec. (loading, 10 sec.; moving load, 18 sec.; dumping, 5 sec.; returning, 13 sec.); rate, 337 long tons per hr.

Florida pebble phosphate. Ground storage of wet concentrates, received in RR. cars from the washers, is customary at the drying plants. At Mulberry (*141 #9 J 55*) the INTERNATIONAL AGRICULTURAL CORP. dumps 50-ton cars of pebble from a trestle; surplus beyond the capacity of this pile is moved by clamshell crane to a parallel pile. Reclamation at 400 t.p.h. is by 36-in. belt conveyor in a tunnel beneath the trestle, delivering by cross-conveyor and elevator to a 400-ton silo feeding a drier. Flotation concentrates are first dumped into bins, but thereafter are handled in the same manner as the pebble by a parallel and duplicate conveyor-elevator system. At the Ridgewood drier (*141 #10 J 40*) the SOUTHERN PHOSPHATE CORP. unloads wet pebble (no flotation concentrate) from cars standing on a trestle by clamshell crane moving on a parallel track on the trestle. Reclaiming tunnel, of concrete, is 10(high)×9-ft., 440 ft. long. At 10-ft. intervals, three 10×10-in. chutes, on center and both sides, discharge into two traveling hoppers which feed a 24-in. belt conveyor at 150 t.p.h. A cross-conveyor then delivers to hoppers feeding the driers. At Pierce (*141 #11 J 57*) the AMERICAN AGRICULTURAL CHEMICAL CO. has combined wet-storage capacity of 50,000 tons at three places, all near the drier, two for pebble, one for flotation concentrate. Pebble is dumped from a low trestle, and reloaded by Brownhoist clamshell crane into cars standing on the same trestle track, which crosses the six 200-ton drier hoppers. Flotation concentrates are reclaimed by a 3-cyd. (2 1/2-ton) Crescent scraper, operated from a Sauerman tower, which discharges to the first of two conveyors leading to the driers. At Coronet (*141 #12 J 57*) the CORONET PHOSPHATE CO. has stored as much as 300,000 tons of wet pebble (none finer than 20-m). Cars are dumped from a single-track trestle and reloaded at the same level, for transfer to drier hoppers, by Brownhoist or Browning clamshell crane.

Crushed stone. PERMANENTE CORP., Calif., consuming 4,170 tons of limestone to make 16,000 bbl. of Portland cement per day, provides ground storage for 560,000 tons of limestone between quarry and grinding-mill bins, in three conical piles at consecutively lower elevations: (*a*) 5,000 tons of unsized shovel output, at about 1,000 t.p.h.; (*b*) 550,000 tons of crushed rock, <6-in.; (*c*) 5,000 tons <1/2-in. An additional 100,000-ton pile of 3~6-in. rock provides for seasonal sales to the sugar industry. In each case, the pile is formed by discharge from the end of a stationary belt conveyor and is reclaimed through pan or vibrating feeder by a belt conveyor inside a tunnel beneath the pile. The rugged topography (plant being about 1 mi. from and 1,150 ft. lower than the quarry) favors this method of storage and transport (*148 A 374*).

The rock quarry on SANTA CATALINA ISLAND, Calif. (*IC 6609*), crushes and screens into four sizes, each caught in a separate pocket. Between this point and the barge-loading dock, each size is stock-piled twice, involving the use of three conveyors in sequence, the first two being equipped with trippers (also with screens to eliminate dust), depositing each size in a separate pile, four piles in a row. The loading ends of the second and third conveyors are in tunnels provided with a tipping-chute gate under each pile. The third conveyor (36-in.×400-ft., driven at 200 f.p.m. by 60-hp. motor) passes over a scale and thence to a loading boom on the dock.

WESTON & BROOKER CO., Cayce, S. C. (*IC 6744*), produces five market sizes of crushed granite. Screens deliver their oversizes into eight pockets, with 1,000-ton combined capacity, open at top. For direct shipment, the pockets deliver to cars by conveyor and loader. For stockpiling of 40,000 tons, a revolving electric crane with 90-ft. boom and 2 1/2-yd. clamshell bucket excavates from the pockets and deposits each size on a separate pile in a ring formation with outside diameter of 257 ft. Reclaiming follows the reverse operation. When additional storage is needed, some of the stone is moved outward by a caterpillar crane with 1/2-yd. clamshell and 60-hp. gasoline motor.

PALMETTO QUARRIES CO., Columbia, S. C. (*34 #10 PQ 27*), stores eight sizes of crushed granite in the manner shown in Fig. 44. Only the coarsest size, 3~2-in. and relatively small in tonnage, is entirely

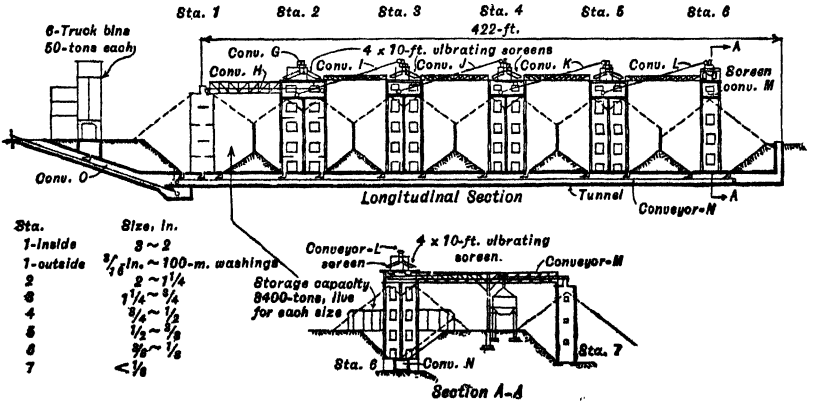

FIG. 44. Screening and storage system, PALMETTO granite quarry.

enclosed (in the 500-ton silo, Station 1); other sizes fall from their respective screens directly into rectangular concrete towers, which are 64 ft. high from top of the reclaiming tunnel to the screen floor. The baffle floors in Stations 1 and 2 are to reduce breakage of the coarse stone there handled. Openings on all four sides of a tower allow material to roll out into a conical pile, separated from adjoining ones by plank fences about 25 ft. high. Each pile holds 4,000 tons, 85% of which is recoverable by gravity

discharge to the conveyor *N;* a crane or bulldoser increases available storage to 10,000 tons of each size. The <1/8-in. screenings, of which 50,000 tons can be stored, arrive via conveyor *M* from the top of Station 6 and are dropped into a circular tower (Station 7) of which the side openings are fitted with

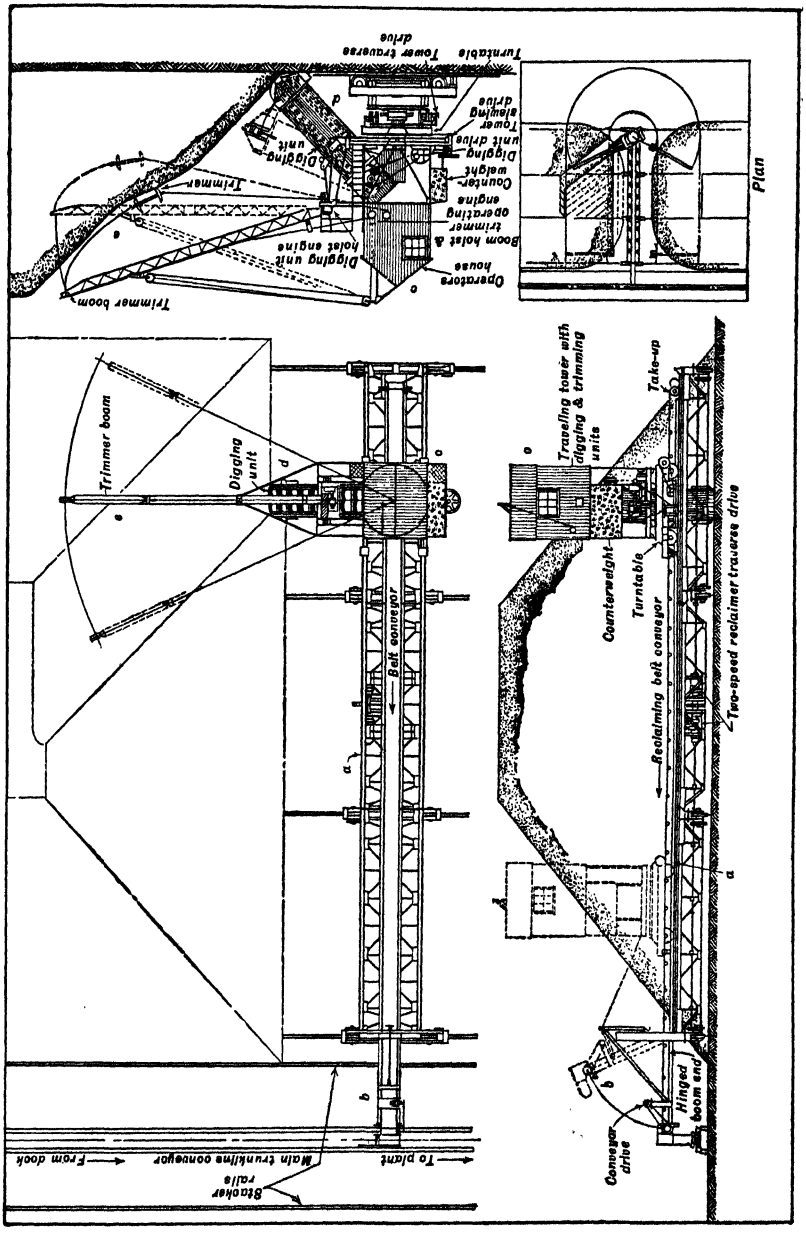

FIG. 45. Reclaiming system, MATHIESON ALKALI WORKS, Lake Charles, La. (*Robins Conveying Belt Co.*)

doors which remain closed until swung outward by pressure of material accumulated inside, thus restraining escape of dust; this material is reclaimed by crawler crane with 3/4-cyd. bucket. The material on the outside of Station 1 is 3/16-in.–100-m. washings derived from final preparation of the coarser sizes. Trackage is provided for 35 empty and 35 loaded cars connecting with each of two rail-

roads; loading-out capacity of the system is 450 t.p.h. For details of the elaborate system of belt conveyors installed at this plant (including those, correspondingly lettered, shown in Fig. 44) see Table 20.

At MATHIESON ALKALI CO., Saltville, Va., 6-in. limestone feed for shaft furnaces is stockpiled by a boom conveyor from the washing plant on an open stockpile behind a retaining wall near the bottom of a steep hillside. Gates in the wall feed aerial-tram buckets.

Sand and gravel. At a FORT WORTH (Tex.) gravel pit (*IC 6652*), after a washing to remove fines, the material (250 t.p.h.) passes consecutively over five vibrating screens, undersize of each being delivered to the next screen by a belt conveyor about 60 ft. long. The resulting six sizes fall directly onto conical piles, without separating partitions, with combined capacity of 30,000 cyd. About an equal volume of additional storage is gained by use of a slack-line cableway transferring excess material to one side and later reclaiming it by reversing the 1/2-cyd. bottomless scraper. Beneath the row of piles is a 7×7-ft. tunnel with three or four 16×16-in. clamshell gates under each pile; a 24-in.×475-ft. belt conveyor @ 250 f.p.m. receives the gate discharges and delivers them to another 24-in. belt (+15°) to a railroad loading pocket. Shipments are blended to specifications by adjusting the flow from the several gates.

At DURBIN, Calif. (*IC 6607*), washed and sized gravel is first distributed among 18 @ 200-ton bunkers in two rows on opposite sides of double-track RR. which extends (for storage of empty cars) 2,000 ft. beyond the bunkers. Storage yard includes two parallel tracks spaced 60 and 120 ft. on each side of the central tracks, making space for six longitudinal piles with total capacity of 60,000 tons. Gravel for stockpiling is drawn from the bunkers into 60-ton cars which are moved by the same clamshell steam crane that unloads them (50-ft. boom, 1 1/2-cyd. bucket, burning 7 bbl. oil in 10 hr.). The crane can unload 3 cars per hr., but it loads slightly faster.

At ELIOT, Calif. (*IC 6705*), PACIFIC COAST AGGREGATES stocks 250,000 tons of sized gravel in parallel rows on both sides of RR. track; bottoms of the piles are depressed below ground level. Cars are unloaded and reloaded by Diesel locomotive cranes with 1 1/4- and 1 1/2-cyd. clamshell buckets; cars are spotted by 20-ton gasoline locomotive. Of the several storage methods employed by this company at its numerous plants, this one has proved most flexible; it can ship 100 carloads a day.

See also Sec. 3, Arts. 24, 38, 41.

Automatic mechanical system. At Lake Charles, La., the MATHIESON ALKALI WORKS has a plant designed for storage and reclamation of oyster shell, dolomite, and coal or coke, all by the same system. Materials arrive by barges and by RR. cars on a track parallel with edge of the dock; the cars dump into a track hopper. A stiff-leg derrick with clamshell bucket transfers material from barges or track pocket to an elevated conical hopper discharging to an inclined pan conveyor and thence to the head end of a belt conveyor running inshore at right angles to the edge of the dock; this main or trunk-line conveyor reaches to the plant and serves for both stockpiling and reclaiming. Stockpiles triangular in section are formed on both sides of this belt conveyor by an inclined swinging-boom conveyor mounted, together with a tripper and hopper for transferring from the horizontal to the inclined conveyor, on a truck which moves on two rails between the two piles; the boom is adjustable as to height. The reclaiming system, Fig. 45, comprises the following units: (1) A traveling bridge *a* running on four rails parallel with the stacker rails and trunk-line conveyor and normally buried under the pile; this bridge can move in either direction, at 6 f.p.m. when reclaiming, or at 60 f.p.m. when disengaged; it carries a belt conveyor of which the outer end is supported on a hinged boom *b* so that it can pass the stacker, if necessary. (2) A tower *c*, rotatable on its base and also movable lengthwise of the bridge *a;* a 10-hp. motor supplies the longitudinal, and a 5-hp. motor the rotating movement. The next two items are both attached to this tower and move with it. (3) An excavating elevator *d* delivering through a hopper to the belt conveyor on the bridge; alternate close-connected pans of this elevator are deeper than the others and are equipped with teeth; all are carried between two steel-bushed roller chains. (4) A trimmer *e*, consisting of two disks centrally attached to a rope which is operated from a 5-hp. reversible drum hoist and passes over a sheave on the outer end of an adjustable boom; this device has proved particularly useful in reclaiming oyster shells. See also Sec. 3, Fig. 31.

Robins-Messiter bedding and reclaiming system, long in use at some copper and lead smelters and more recently adopted at a few iron blast furnaces, aims to produce a mixture

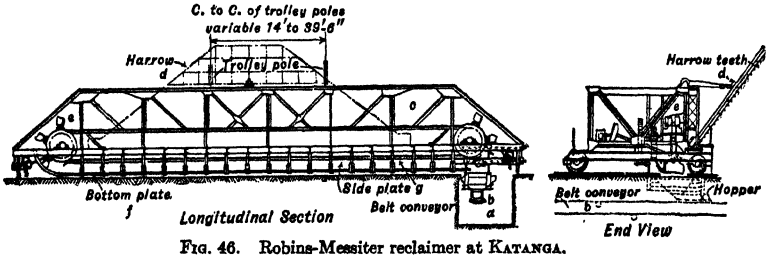

FIG. 46. Robins-Messiter reclaimer at KATANGA.

uniform in assay and size analysis, while also permitting adjustment of both factors to meet predetermined specifications. The beds are formed in rectangular piles, triangular in cross-section, by discharge from automatic traveling trippers on overhead belt conveyors, the latter receiving from a main trunk conveyor which brings materials from some central

source. In general, each pass of a tripper may deposit about 200 lb. of ore per lin. ft. of pile, making a total (for perhaps 350 passes) of 32 to 36 tons per ft. of completed pile. Adjustment as to grade of reclaimed mixture may be made at this time on the basis of assays of the several components. RECLAIMING. Along one side of each pile is a trench *a*, Fig. 46, 6 ft. deep by about 7 ft. wide, in which is installed a belt conveyor *b*, discharging to a trunk conveyor for delivery to the final destination. One end of a traveling bridge *c*, about 10 ft. longer than the base width of the pile, spans this trench. The bridge carries two essential mechanisms besides its own travel drive: (1) The harrow *d*, which is a trapezoidal skeleton framework equipped with downward pointing teeth, adjustable as to inclination and slowly oscillated lengthwise, *i.e.*, across the end of the pile, by eccentric and connecting rod. (2) An excavating conveyor *e*, which consists of an endless chain of open-connected scrapers traveling along a continuous bottom plate *f*; the forward edge of this plate is held close to the toe of the pile, while a vertical side plate *g* closes its rear edge. The well-mixed material is thus collected and transported to the trench conveyor. The whole reclaiming outfit can be moved from one pile to another by a car running on rails in a wide trench at one end of the bedding floor. Power to operate the bridge and its equipment is drawn from trolley wires.

TRANSPORT OF MATERIALS

By

Henry A. Behre, Formerly Assistant Professor of Mining, Sheffield Scientific School, Yale University

Revised by

E. J. Tournier, Robins Conveying Belt Co.; and E. K. Judd, Mining Engineer, New York, N. Y.

Handling, as related to mineral dressing, involves transport over considerable distances, both vertical and horizontal, as well as through relatively short distances into and out of storage containers. The specific problems ordinarily encountered require the handling of: (*a*) run-of-mine from mine delivery point to the primary breaker; (*b*) coarsely broken dry mineral between primary and secondary crushers and into and away from storage bins; (*c*) relatively coarse wet products, such as jig feed, jig products, and the like, in the mill; (*d*) wet sand and slime pulps; (*e*) the same material dry; (*f*) froth-flotation concentrates. The apparatus described in this section includes conveyors and elevators, chutes and launders, feeders, weighers and distributors, pumps and air lifts. Transport by wagon, truck, railroad, rope haulage, tramways, etc., is treated in Sec. 20.

Conveyors are applicable when the horizontal distance is relatively short. There is no arbitrary limit beyond which a conveyor system cannot be used, but batch transport, as by cars, is usually more economical when the distance exceeds, say, 2,000 ft. Travel may be horizontal or inclined either up or (more rarely) down, the maximum practicable inclinations varying with the type of conveyor and the nature of material. Any conveyor can be arranged to receive (also to discharge) its load at one or at more than one point.

Types of conveyors. Belt conveyor, the most widely used type, consists of a continuous belt, which is supported at intervals along both its upper and return runs by various kinds of idlers. Pan conveyors are similar to belt conveyors in method of drive and support, but differ in that the carrying surface consists of a series of articulated plates or shallow pans supported on rollers and tied together by pins. Bucket conveyors differ from pan conveyors in that buckets of rectangular horizontal cross-section are substituted for the shallow pans or plates of the latter. The buckets may be continuous, *i.e.*, with overlapping edges, or spaced at definite intervals. Flight conveyor is essentially a trough through which a series of scrapers attached to links or rope is drawn. Screw conveyor pushes material along the bottom of a semicylindrical trough by means of a spiral screw revolving therein.

6. BELT CONVEYOR

Arrangement. The carrying element is a continuous belt passing around a head pulley and a tail pulley, supported on its carrying run by troughing idlers (Fig. 47, *A*), properly spaced, and on the return run by return idlers (Fig. 47, *B*). The simplest form of conveyor is loaded near the tail pulley through a chute and delivers over the head pulley. It is driven through the head pulley by various methods of speed reduction; for other forms of drive, see Fig. 57. This type of conveyor may be run at an inclination (Table 7) which, for ordinary service, is best limited to 18° or 20° (3 7/8 to 4 3/8 in. per ft.). For actual examples, see Table 14. Fig. 48 represents various types of belt-conveyor installations. Minimum radius of curvature to maintain the belt on the troughing idlers when running empty in the fourth arrangement is 125 ft. If this is structurally impossible, the third arrangement

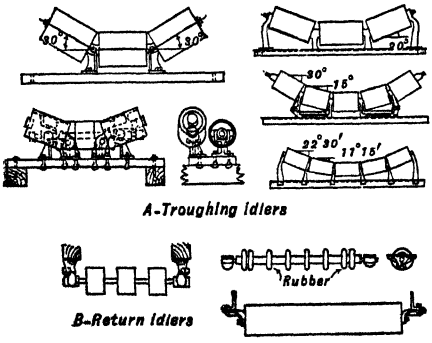

Fig. 47. Belt-conveyor idlers.

is frequently employed, or tandem conveyors may be installed, the horizontal delivering to the inclined.

Table 7. Maximum recommended slopes for belt conveyors (*Robins*)

Material	Slope		Material	Slope	
	Deg.	In. per ft.		Deg.	In. per ft.
Cement, loose	20	4 3/8	Concrete, wet	15	3 7/32
Clay, fine, dry	23	5 3/32	Gravel, bank run	18	3 7/8
Clay, wet, lump	18	3 7/8	Gravel, screened	15	3 7/32
Coal, r.o.m.	18	3 7/8	Ore, crushed	20	4 3/8
Coal, sized	20	4 3/8	Sand, dry	15	3 7/32
Coal, bituminous slack	23	5 3/32	Sand, damp	20	4 3/8
Coke, oven run	18	3 7/8	Sand, foundry, tempered	24	5 11/32
Coke, sized	18	3 7/8	Stone, crushed	18	3 7/8
Coke, breeze	20	4 3/8	Wood chips	25	5 19/32

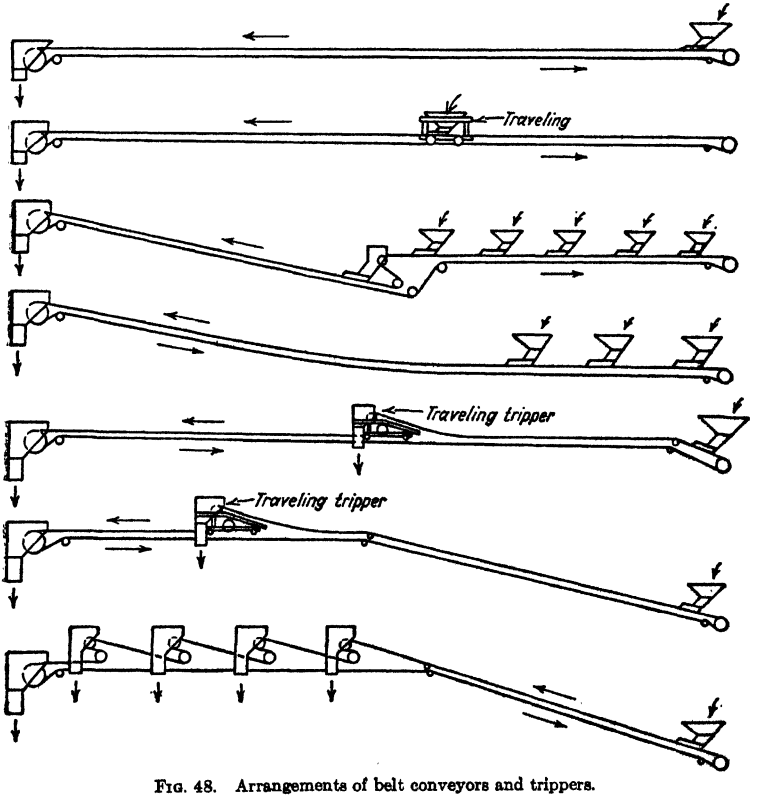

FIG. 48. Arrangements of belt conveyors and trippers.

Conveyor belting is made of several layers or plies of heavy cotton duck most commonly bound together with rubber "friction" and covered completely with a layer of best-grade vulcanized rubber. The strength of the belt depends upon the weight and strength of the duck and the number of plies; also upon the way in which the joints in the plies are spaced. Belt duck is made with the lengthwise or warp threads heavier, stronger and closer together than the transverse or filler threads. The strength of the duck depends upon the weight, which is stated as the number of ounces per piece 36 in. long in the direction of the warp threads and 42 in. wide. The ordinary weights are 28, 32, 36, and 42 oz. The number of plies ranges from 3 for short, narrow belts to 15 for long, wide belts. Table 8 gives recommended limits as to number of plies in rubber belts of various widths. Minimum number depends upon the required belt tension (see p. 39) and the weight (or strength) of the duck (tensile strength of rubber is not considered as adding to ultimate strength of a belt); maximum number of

plies is governed by the number, size, and arrangement of the pulleys in the driving system and by the lateral curvature imposed by the troughing idlers. For safe working tensions on rubber belts composed of various weights of duck, see Table 17. Stepped-ply belts have one or two more plies along both edges than along the middle, the additional plies being continuous across the bottom of the belt, turned upward over the edges, and gaping along the top side; this permits an additional top thickness of rubber cover along the center line, where abrasion is most severe, and promotes lateral flexibility for troughing, without loss of the longitudinal stiffness necessary to avoid sagging and spilling over the edges between idlers. The strength of such a belt is figured on the average number of plies as between middle and edges. One American manufacturer adds a breaker strip of tough, open-weave fabric (not counted as a ply) between uppermost ply and the top cover, turned down and under along the edges, and imbedded in the same friction as the rest of the belt.

Table 8. Recommended number of plies in rubber belts of various widths (*Robins*)

Width, in.	Min.	Max.	Width, in.	Min.	Max.
14	3	5	36	5	9
16	3	5	42	6	10
18	4	5	48	7	11
20	4	6	54	7	13
24	4	6	60	8	15
30	5	7			

The life of belt under a given service depends upon the character of the bond between plies, *i.e.*, FRICTION, and the thickness and quality of the rubber cover. The friction should be of such strength that plies will not separate under the tension of the power pull or in passing around the pulleys. The character of the rubber cover depends upon service demanded. The quality should be of best-grade pure vulcanized rubber in order to resist abrasion and keep out moisture. The minimum economical thickness is about 1/32 in.; although this is too thin for any but the lightest service as a top cover, it is a common thickness for the bottom. On heavy service the pulley side of the belt usually has a cover 1/16 in. (sometimes 1/8 in.) thick and the carrying side up to a usual maximum of 1/4 in.; belts with 3/8-in. top covers are installed at CHINO and CHUQUICAMATA (*Q*), and elsewhere for particularly severe service. The friction between cover and belt should be the same as between plies, or greater. The edges of conveyor belts may be subjected to hard wear by rubbing against guide rollers, or the inside of discharge boxes, trippers, and the like. They should, therefore, be protected with extra thicknesses of rubber, firmly bonded to the rest of the belt.

Age, light, and heat are all destructive to rubber belts. Age causes hairline cracking of the cover and this deterioration goes forward most rapidly in sunlight. Aging lessens both the tensile strength and stretch of rubber compounds, deterioration in both qualities being most rapid in the first year and amounting to as much as 50% of the tensile strength and 63% of the stretch (ultimate elongation) in samples tested by the U. S. Bureau of Standards. When the cover breaks down, dirt and moisture get into the belt fabric, the friction is destroyed, plies pull apart, and the belt is ruined. Heat causes a similar deterioration of the rubber cover and also causes breakdown of the friction rubber with consequent loosening of plies and cover. Ordinary rubber belts are not recommended for handling materials hotter than 140° to 150° F. Special belts with under-vulcanized rubber for friction and cover are made for handling hot materials, but even such belts deteriorate rapidly. Other special types for hot materials introduce a layer of woven asbestos between cover and body, or entirely replace the rubber top cover by asbestos fabric.

Life of rubber belt. Table 9 gives examples (*Q*) of belt life, together with the factors by which the life is chiefly determined. Owing to the multiplicity of variables, no consistent trends are evident. The common supposition that a short belt is less durable than a long one, at the same speed and tonnage (owing to the greater frequency of loading impact at a given spot on the belt) is not clearly supported by the available data. In general, coarse ore is seen to be more destructive than fine, as would be expected.

Duplex belt is designed to avoid discarding an entire belt with still serviceable carcass when only the top cover has deteriorated. It consists of a friction-duck belt of suitable thickness, upon which a renewable rubber cover is superimposed. The lower belt, which receives its tension from the drive unit, is the POWER BELT; the upper, or WEAR SHEET, carries the load but is not under tension. The latter is not driven, but moves by frictional contact with the upper run of the power belt and travels slack on the return run. When the wear sheet is worn out, it is replaced by a new one. The power belt remains in service and may outlast several successive wear sheets. The power belt is designed according to power requirements (see p. 37). The wear sheet is usually 4 to 6 in. wider than the power belt, as protection for the latter. It is made of rubber compound reinforced with sufficient duck to overcome any elasticity of the rubber, and to provide body to hold the belt fasteners. The thickness of rubber depends upon the nature of service; for coke, trap rock, ore, etc., a 3/8-in. rubber wear sheet is customary. Duplex belt cannot be used with a tripper.

Balata belt is multiple-ply canvas belt without covering but impregnated with a solution of balata gum. This belt is said to be somewhat stronger than rubber belt with the same number of plies because the strength of the duck has not been impaired by the heat of vulcanizing. It cannot be used in hot locations because the gum softens at 120° F. It has been used extensively in South Africa but not much in the United States. Robertson and Johnston (*102 J 10*) report lives ranging in days from 414 to 672 and in tons handled from 400,000 to 800,000 for balata belts carrying crusher product (<3-in.) in RAND gold mills, as compared with 345 to 1,700 days and 200,000 to 850,000 tons for rubber belt in similar or harder service.

Steel conveyor belts (*14 CE 109, 182; 16 ibid. 279*). Swedish belts 0.035 in. thick, made of hardened and tempered steel with tensile strength of 80 to 85 tons per sq. in., come in single widths up to 32 in.; greater widths are obtained by joining two or more belts along their edges; one installation near London has a belt 12 ft. 10 in. wide. A German belt 23 1/2×0.04-in. has a tensile strength of about 47 tons, or

Table 9. Life of some rubber conveyor belts

	Length, c-c., ft.	Width, in.	No. plies @ — oz.	Top cover, in.	Speed, f.p.m.	Tons per hr.	Max. size, in.	Life
Bunker Hill & Sul.ivan....	64 3/4 *i*	42	8@32	1/8	35 to 120	217	6 1/4%>2	3,117 da.
	176 3/4 *i*	24	6@32	3/32	365	217	10%>1/2	1,300 da.
	232 3/4 *i*	20	5@32	3/16	181	50	10%>1/2	3,132 da.
Cons. Min. & Sm.....	67 1/2 *h*	30	6@32	7/32	166	175	6	800 da.
	93 1/3 *i*	30	6@32	7/32	305	350	6	1,300 da.
	71 1/2 *i*	30	6@32	7/32	310	350	1	2,000 da.
	81 1/2 *i*	42	7@32	7/32	250	1,100	1	800 da.
	85 *i*	33	6@32	7/32	365	750	1/2	1,450 da.
	192 1/3 *i*	30	8@32	7/32	315	350	1/4	2,400 da.
Tenn. Copper Co.....	362 *i*	24	7,5@32	3/16	210	200	3/4	4,400 da.
	104 1/3 *i*	20	6,5@28	1/8	162	18	0.0058	1,400 da.
Chuquicamata, Chile.....	428 *i*	60	11@42	3/8	500	1,200	10	8,021 hr.; 13,568,690 tons *a*
	182 *i*	36	8@32	1/4	300	540	6	20,909 hr.; 9,650,450 tons *a*
	372 *i*	36	8@32	1/4	423	480	10	16,395 hr.; 7,976,810 tons *a*
	371 *i*	48	10@32	1/4	452	1,030	1/2	23,274 hr.; 43,232,110 tons *a*
	1,257 *i*	60	12@32	1/4	540	1,590	1/2	29,432 hr.; 43,702,360 tons *a*
Homestake Min. Co.....	60 1/2 *h*	42	6	1/4	200	200	2	8 yr.+, 4,063,000 tons *a*
Britannia Min. & Sm.....	155 *h*	30	6	1/4	350	300	6	2 1/2 yr.
	300 *i*	42	7	9/32	450	700	1	4 yr.
	125 *h*	42	6	3/16	450	700	1	6 yr.
	165 *h*	30	5	1/8	200	250	1/4	12 yr.
	210 *h*	30	5	1/8	280	250	1/4	10 yr.
Anaconda, Conda, Id.....	167 3/4 *h*	24	8	3/16	165	60	1/2	15 yr.
Nev. Consol., Ray.....	78 *i*	42	6@42	3/16	320	500	1	550 da.+
	103 *h*	42	8@32	3/16	332	500	1	1,500 da.
Nev. Consol., McGill.....	260 *i*	42	8@32	3/16	360	500	1/4	1,648 da.
	150 1/4 *i*	48	8@32	3/16	320	500	12	772 da. *a*
Cal. & Hecla, Lake Linden.	280 *i*	24	6@32	1/8	568	125	3/16	1,000 da.
Tamarack.....	582 *i*	24	6@32	1/8	410	85	1/4	1,200 da.
S. Fran. de Mexico.....	170 *i*	22	6@32	3/16	375	100	1/2	4 yr.
	116 *h*	22	5@32	3/16	250	100	6	2 yr.
Sherritt-Gordon.....	50 *h*	48	6@32	3/16	100	200	8	500 da.
Sunshine Min. Co.....	63 *i*	30	5@32	3/16	118	105	12	2 yr.+
	102 *i*	24	5@28	5/32	325	180	2	2 yr.+
	310 *i*	24	5@28	5/32	306	105	1/2	2 yr.+
Roan Antelope.....	42 *h*	48	6@32	5/16	var.	500	6	2,350 hr.; 1,000,000 tons±
	302 *i*	42	8@32	3/16	320	500	6	6,187 hr.; 2,500,000 tons±
	221 *i*	42	8@32	3/16	320	480	1/2	10,000,000 tons ±
N. J. Zinc Co., Franklin...	309 *i*	30	8@32	1/8	372	220	3	1,800 da.
	153 *i*	24	5@28	3/16	245	82	0.10	650 da.+
Andes Copper Co.....	38 *i*	30	6@28	1/4	339	426	3 1/2	8,372,600 tons
	105 *h*	42	8@28	1/4	459	426 to 1,278	3 1/2	7,762,125 tons
	385 *i*	42	10@36	1/4	462	426 to 1,278	3 1/2	10,563,027 tons
	109 *i*	42	8@28	3/16	452	689	1	28,165,000 tons
	1,500 *b i*	42	10@36	3/16	462	689	1	22,254,737 tons
	123 *h*	30	6@28	3/16	415	345	1	14,171,774 tons
	124 *h*	30	6@28	3/16	415	345	1	13,927,774 tons
	46 *i*	30	6@28	3/16	415	345	1	13,927,774 tons
Climax Molybdenum.....	204 *i*	54	9,7@36	1/4	225	600	12	450 da.
	165 *i*	36	7,5@32	3/16	300	400	3	210 da.
	242 *i*	48	8,6@36	3/16	400	1,800	3	475 da.
	59 *i*	48	7@42	5/16	500	2,200	3	186 da.
	255 *i*	48	9,7@36	3/16	500	2,200	3	290 da.
	32 *h*	36	5@36	3/16	200	450	3	710 da.
	42 2/3 *i*	24	5@32	3/16	300	300	1 1/2	150 da.
	29 *h*	36	4@32	3/16	40	80	3/8	1,100 da.
Copper Range, Freda.....	94 *i*	30	5@28	1/4	301	388	1	775 da. *c*
	13 *h*	26	4@28	1/8	231	97	7/32	775 da. *c*
	80 *i*	22	4@32	1/8	334	251	1/2	606 da. *c*
	90 *i*	20	4@28	1/8	77	12	3/4	988 da. *c*
	103 *i*	22	4@28	1/8	367	105	7/32	1,076 da. *c*

a Still in service at date of report. *b* Total belt length. *c* Days of 12 hr.
h Horizontal. *i* Inclined.

2 1/2 times that of a 5-ply reinforced rubber belt of same width. Steel belt 0.04 in. thick requires head pulleys of about 40-in. diameter, against 16 to 20 in. for 5/16- to 7/16-in. rubber. Lateral stiffness of a steel belt is sufficient to prevent sagging of its edges between idlers, but the lack of stretch may cause even a loaded belt to lift off the idlers at an upward curve. Steel belts are most commonly operated flat, and usually with skirt boards; capacity of a 23 1/2-in. belt, thus equipped, is about 10% less than that of a 31 1/2-in. troughed rubber belt, or 60 to 80 tons of coal per hr. at a speed of 236 f.p.m. Some steel belts have been troughed by passing over idlers made in the form of helical springs and carried on a self-aligning bearing at each end; such idlers were spaced 5 1/4 ft.; flat return idlers, at 16 1/2 ft. Up to distances of 1,650 ft., and a load of 120 t.p.h., level, a steel belt requires about the same power as a rubber belt. During its life, a rubber belt may carry about twice the tonnage of a steel belt, but on the basis of total tons moved, replacement of a rubber belt costs 60% more, synthetic rubber 120% more than steel.

Idlers are required on both carrying and return runs. Carrying idlers are usually TROUGHED, *i.e.*, set so as to bend the belt up at the sides, and thus increase carrying capacity. Return idlers are straight-faced. The carrying capacity of a belt loaded so that the upper surface of the load comes within a given distance of the edge increases with steepness of troughing up to 45°. The disturbance of the load in passing over the troughing idlers increases, likewise, with increase of side slope, and there is a corresponding increase in belt wear and power consumption. As a result, standard troughing rarely exceeds 30° and some manufacturers recommend a maximum of 20°. At such angles it is easier to keep the belt straight and there is less failure of belts by longitudinal cracking.

Troughing idlers (Fig. 47, *A*) are commonly made with 3 or 5 rollers. In the 3-roll type, used with narrow belts, the usual slopes of the inclined rollers are 22 1/2° and 30°; in the 5-roll type, commonly used for wide belts, the inner rollers may be sloped 15° and the outer, 30°. In some types, the slope of the outer rollers is adjustable. Rollers faced with rubber 1 in. thick are designed for installation under a loading point, to reduce wear from impact on the belt. The cheap grades of rollers are made of cast iron with babbitted hubs running on cast-iron shafts bored for grease-cup lubrication. Ball-bearing and roller-bearing idlers of pressed steel or cast iron show savings in power losses due to idler friction alone of as high as 60%. In general, plain-bearing, grease-lubricated idlers are falling into disuse, since antifriction bearings, of both roller and ball types, can now be applied to belt-conveyor idlers nearly as cheaply as plain bearings; in most cases, the difference in price is approximately 10%. Since the antifriction idlers require lubrication only at infrequent intervals, the saving in maintenance cost more than offsets the difference in price of the idlers. Among 120 conveyors reported in 1939 (Q), 90 had antifriction idlers, although plain bearings were still to be found in some large mills.

Troughing idlers are spaced according to width and stiffness of the belt and the load carried. With light loading and ordinary belt a spacing of 5 ft. is allowable, but this should be the limit under any conditions; with heavy loading and wide belts, spacing should be reduced to 3 or 3 1/2 ft., or even less for 54- or 60-in. belts.

Return idlers (Fig. 47, *B*) are made of the same materials and provided with the same types of bearings as troughing idlers, but ordinarily with one pulley only. They are 1 to 2 in. wider than the belt and are spaced 6 to 12 ft., commonly 10 ft. apart. Since it is the carrying and dirty face of the belt that rides the return idlers, these are subject to excessive wear. Corrective measures (aside from cleaning of the belt by sprays, wipers, etc.) include (*a*) chilled cast-iron pulleys with unfinished (therefore hard) faces; (*b*) rubber-faced pulleys; (*c*) rubber-disk rollers (Fig. 47, *B*); the latter may be so adjusted as to stagger the tracks of the disks and thus to distribute the wear; the slight tendency to sag between disks also helps to dislodge adhering material.

Side or guide idlers are set to bear at right angles to the edges of the belt at places where the latter tends to run off the troughing idlers. They are hard on the edges, both wearing the belt and tending to fold it back, causing a crack 1 or 2 in. in from the edge. They should not, therefore, be used unless unavoidable. Belts can sometimes be straightened and side idlers avoided by canting troughing idlers slightly toward head pulley, thus giving the horizontal idler pulley more bearing and more effect on the belt, or they may be skewed.

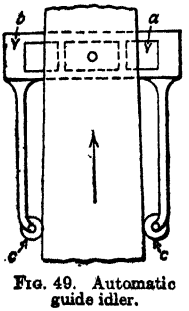

FIG. 49. Automatic guide idler.

Automatic training idlers. The device shown in Fig. 49 has been successful at several of the large copper mills. It consists of an ordinary troughing idler *a* mounted on a pivoted plate *b* with guide idlers *c* carried on projecting arms. If the belt rides, *e.g.*, to the left, the troughing idler is swung backward on the right, which causes the belt to shift toward that side. Other types are now available for both carrying and return runs. The Robins troughing trainer (Fig. 50, *A*) consists essentially of a 3-pulley antifriction idler mounted on a flat steel base. The latter is fitted with a swivel center pin fastened at the center of a sub-base, which is supported at both ends on the conveyor stringers; this permits the troughing idler to pivot on the pin. At the outer edges of the idler end pulleys two ball-bearing guide rollers are mounted on hinged trunnion shafts set per-

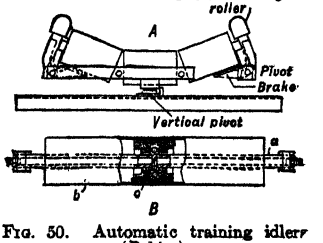

FIG. 50. Automatic training idlers (*Robins*).

pendicular to the outside idler pulleys. Each trunnion is hinged at a point below the guide roller and has a short arm extending below the hinge and furnished at its end with a small friction block curved to fit the outside diameter of the idler pulley. Normally, these brake blocks hang free of the pulleys, but they make contact when a slight touch of the belt presses against the guide pulley. This causes a slight drag on one side and swings the idler on its axis, thus steering the belt back to its central position. The return-belt trainer (Fig. 50, *B*) consists of three principal parts: a hollow stationary shaft *a* supported by brackets on the conveyor stringers, a tubular roller, and an antifriction bearing *c* centrally located inside the roller and fastened to the shaft. The antifriction bearing is pivoted on a fixed swivel pin located at the center of the roller and inclined forward about 30°. The roller not only rotates on its bearing but also is free to rock about the inclined pivot. If the weight of the belt falls more on one side than on the other, the heavy side forces the roller downward and forward, skewing the roller, whereupon the belt climbs to the high side and moves toward the center of the conveyor.

Pulleys should be crown-faced, 1 or 2 in. wider than the belt, mounted on sufficiently heavy shafts to insure against bending, and the driving pulley (usually the head pulley) should be securely keyed and clamped to the drive shaft. The diameter in inches should be at least 5 times the number of plies; on 114 conveyors reported (*Q*), diameters of head pulleys ranged from 3 to 9 in. per ply (6 to 7 in. most frequently). Robertson and Johnston (*102 J 15*) tell of an 8-ply belt on a 20-in. pulley that separated along the plies in 4 mo. The pulley at the other end of the conveyor is fitted with a TAKE-UP MECHANISM to compensate for small changes in belt length and hold belt tension constant. The usual allowance is 12 to 18 in. for belts under 100-ft. centers; 18 to 24 in. from 100 to 200 ft., and 30 to 36 in. for longer belts. Fig. 51, *a*, shows a common type of screw-adjusted take-up. On conveyors longer than about 400 ft., general practice is to use a counterweighed take-up, of which two types are shown in Fig. 51, *b* and *c*. Such automatic take-ups are also necessary on conveyors of any length equipped with automatic weighing or feed-regulating devices (Arts. 22, 23).

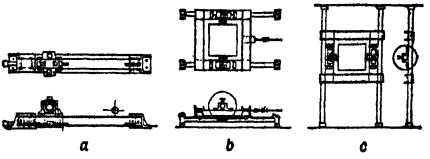

FIG. 51. Take-ups for belt conveyors.

Table 10. Widths of troughed belts recommended for materials of various maximum size (*Robins*)

Width, in.	Maximum size, in.		Width, in.	Maximum size, in.	
	Sized	Unsized		Sized	Unsized
14	2	2 1/2	36	9	18
16	2 1/2	3	42	11	20
18	3	4	48	14	24
20	3 1/2	5	54	15	28
24	4 1/2	8	60	16	30
30	7	14			

Capacity depends upon width of belt, degree of troughing, speed, slope, size and specific gravity of the material carried, and its angle of repose.

Width of belt is determined primarily by the size of material to be carried, after that by the capacity desired at suitable speed (see below). A given width will carry coarser material if accompanied by a considerable proportion of fines (Table 10 and Fig. 52). Minimum width is preferably 14 in., as a narrower belt will not conform to the troughing idlers when empty unless of very light weight; 60 in. is the present maximum width available. The loading chute should not exceed two-thirds the projected width of the troughed belt, if material is to be prevented from falling off, and the chute should be more than three times the size of the particles, if they are of uniform size, and more than twice as large as the largest where mixed sizes are handled. Troughing allows the load to be carried nearer the edge of the belt than is safe on a flat belt.

Capacity formulas. Manufacturers give formulas for capacity in terms of belt width in the form $V = KW^2$, in which V = cu. ft. per hr. at 100 ft. per min. belt speed, W = width of belt, in., and K is a factor having a constant value of 3.5 (*Jeffrey*) or a value ranging from 3.14 for 14-in. to 4.11 for 60-in. belts (*Robins*); *i.e.*, capacity (at constant speed) increases slightly faster than square of width. Fig. 52 coordinates capacities in tons and in cubic feet per hour with width and speed of belt and with maximum advisable size of material. In practice, wide deviations from recommended best conditions are often compelled by local circumstances, of which probably the most important is the necessary provision for peak loads.

Table 11. Capacities of belt conveyors in American mills (*Q*)

[Tons per hour at uniform speed of 100 ft. per min.]

Width, in.	Extreme range	Approx. aver.
12	3 to 17	10
14	3 to 29	13
16	16 to 53	32
18	22 to 92	50
20	3 to 78	50
22	27 to 75	45
24	14 to 145	70
28	75 to 100	87
30	17 to 200	110
36	80 to 290	190
42	29 to 440	160
48	157 to 450	250
54	266 to 405	330
60	240 to 293	270

Table 11, based on about 150 belt conveyors in American mills (*Q*), with capacities reduced to a uniform speed of 100 f.p.m., shows the variations that occur. So far as can be judged by plotting such

discordant data, installations show a tendency to relate capacity more nearly to width than to square of width. Capacity (at given speed) is but slightly affected by size of material, since conveyors of the same width are frequently reported to carry almost identical tonnages of coarse, medium, and fine ores.

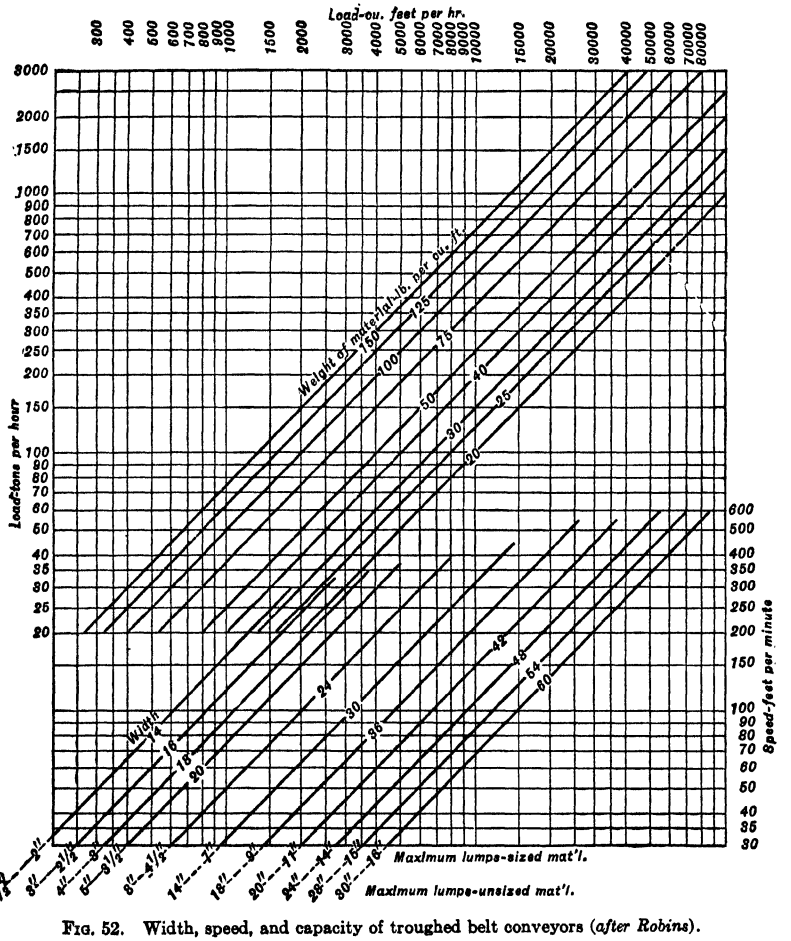

FIG. 52. Width, speed, and capacity of troughed belt conveyors (*after Robins*).

Speed depends upon the size of particles carried, character of material, width and slope of belt, and capacity of the loading device. The limiting speed in every case is that at which material is blown off the belt by air resistance. With small material that flows easily and steadily in a loading spout so that the belt is evenly loaded, belts may be run fast, but with coarse material the feed is necessarily irregular and bare spots will be left on a belt run too fast. With large lumps there is danger of throwing material off the belt in passing idlers when the belt is run too fast. If material is friable and breakage undesirable, as, for instance with coke and coal conveyors, belts must be run slowly if excessive breakage at the discharge end is to be avoided. Ordinary idlers are not carefully turned and balanced as is necessary for high speeds and will rattle and vibrate at speeds much over 400 f.p.m. This limitation does not apply with well-made ball- or roller-bearing idlers. Minimum speed is limited to the necessity for throwing material clear of the head pulley, if headroom is an important consideration. The minimum speed to effect clean discharge is about 150 f.p.m. Lower speed is necessary on inclined runs than on horizontal owing to the greater difficulty in bringing the loading material up to speed.

Table 12 gives maximum advisable speeds for troughed belts carrying various materials; in general practice, a reduction of 25% from these maxima is recommended.

Table 12. Maximum advisable speeds (f.p.m.) for troughed belt conveyors

HORIZONTAL

Belt width, in.	14, 16	18	20	24	30	36	42	48, 54, 60
Unsized coal, ore, gravel, stone, ashes, etc.	300	350	350	400	450	500	550	600
Sized coal, coke, fragile materials	250	250	300	300	350	350	400	400
Sand, wet or dry	400	500	600	600	700	800	800	800
Crushed coke, slag, fine abrasive materials	250	300	400	400	500	500	500	500
Coarse lump ore, rock, slag, etc.				350	350	400	400	400

REDUCTION OF NORMAL SPEED FOR INCLINED CONVEYORS (*after Hetzel*)

Inclination, deg. +	5	10	13	16	19	22
Reduction factor, %	9	17	22	27	33	39

Table 13. Examples of belt conveyors operating at relatively high speeds (*Q*)

Plant	Max. size ore, in.	Width, in.	Speed, ft. per min.	Tons per hr.
Chuquicamata *i*	10	60	500	1,200
i	1/2	48	452	1,030
i	1/2	60	540	1,590
Phelps Dodge, Ajo *i*	7	48	487	800
i	2 1/2	60	650	4,000
Climax Molybdenum Co. *i*	3	48	500	2,200
Miami Copper Co. *i*	1	36	613	550
h	1/4	36	564	780
i	1/4	36	542	780
h	1/4	36	518	780
Britannia *a*	1	42	450	700
Andes Copper Co. *i*	1	42	452	689
i	1	42	462	689
Nev. Consol., McGill *h*	1/4	42	450	1,000
Cal. & Hecla, Linden *i*	3/16	24	568	125
Utah Copper Co., Magna *i*	1/2	36	460	600

a Two similar conveyors, one horizontal, other inclined. *h* Horizontal. *i* Inclined.

Table 14. Examples of steeply inclined belt conveyors (*Q*)

Plant	Width, in.	Length, c-c., ft.	Max. slope, deg.	Total rise, ft.	Tons per hr.	Max. size, in.	Drive and bearings	Hp. consumed	Theoretical hp. for lift	Net hp. for conveyor	Net hp-hr. per ton per 100 ft. travel
Cons. Min. & Sm.	30	93.3	18 1/3	29	350	6	*C, A*	23	10.25	12.75	0.0390
	30	71.5	18 1/3	23	350	1	*C, A*	19	8.13	10.87	0.0430
Tenn. Copper Co.	20	93.3	19 1/2	33	3 *a*	0.0029	*R, A*	3.5	0.10	3.40	1.200
	20	104.3	19 1/2	34	18 *b*	0.0058	*R, A*	4	0.62	3.38	0.180
Chino	48	60	19	19.5	750 *c*	8	*R*	25	14.77	10.23	0.0230
	54	410	19	137.5	1,500	1	*T*	250	208.31	41.69	0.0068
Miami Copper Co.	36	19.25	20 1/2	7.2	385	10	.....	3.5	2.80	0.70	0.0094
	36	78.5	20 1/2	27.5	550	1	.....	30	15.28	14.72	0.0346
	36	160.5	20	54.9	700	1/2	.....	50	38.81	11.19	0.010
Phelps Dodge, Ajo	28	165.2	18	18	300	2 1/2	*B, A*	15	5.45	9.55	0.0193
	28	63.1	18 1/3	8	400	1/2	*B, A*	16	3.23	12.77	0.0506
Britannia	42	300	18 1/3	23	700	1	*B, A*	54	16.26	37.74	0.0180
Nev. Cons., McGill	48	150.25	18	46.25	500	12	*R, A*	45	23.36	21.64	0.0290
	42	260	16	63.4	500	1/4	*R, A*	38	32.0	6.0	0.0046
Utah Copper, Magna	54	165.5	18 1/3	55	1,500	15	*R*	103.3	83.3	20.0	0.0081
Sherritt-Gordon	30	100	19	30.1	350	1	*B, A*	20	10.63	9.37	0.0267
	24	300	19	47.3	150	1/4	*C, A*	15	7.17	7.83	0.0171
Roan Antelope	42	302	18 1/3	97	500 *d*	6	*T, A*	70	49.0	21.0	0.0139
	42	221	18 1/3	74	480 *d*	1/2	*T, A*	70	35.9	34.1	0.0321

a 10% moisture. *b* 9% moisture. *c* 8% moisture. *d* 6% moisture. *A* = Antifriction bearings. *B* = Belt-driven. *C* = Chain-driven. *R* = Speed reducers of various types. *T* = Tandem drive.

Apart from the physical limitations stated, a good rule is to run the belt at as low a speed as will carry the required load. In this way the percentage of the total load that comes into contact with the belt surface is least, the number of times that any given spot on the belt is subject to the abrasive action of the oncoming stream is a minimum, and power consumption and internal belt strain are least. Table 13 gives a few examples of notably high speeds.

Slope. The maximum allowable slope varies with the size and shape of material, method of loading, speed of belt, and moisture content. (See Table 7.) Coarse, rounded material requires a flatter slope than fine material or flat slabs; mixed sizes can be raised on a steeper slope than sized material, and uniform feed permits steeper slope than intermittent feed. At normal speeds a slope of 18° is safe for <3- or <4-in. material; <1/4-in. dry material can be run at 22°, and at 25 or 26° if the conveyor is speeded to 350 or 400 f.p.m.; sand tailing with considerable moisture (15 to 20%) may run backward at 15°, but <2-mm. tailing containing 28 to 30% water was readily carried at a slope of 13° 10′ at the Bonne Terre mill.

Table 14 gives data on conveyors operating at close to maximum inclination (Q).

Table 15. Approx. weight of rubber conveyor belt with 1/8-in. top and 1/32-in. bottom cover

[Lb. per lin. ft. per inch width]

Plies	28-oz. duck	32-oz. duck
4	0.180	0.190
5	0.201	0.214
6	0.225	0.240
7	0.247	0.266
8	0.270	0.291
9	0.291	0.315
10	0.312	0.340

Vertical transition curve. The inclined portion of the belt may lift off its idlers in installations like the fourth in Fig. 48. The worst condition arises on starting, and at the instant when the whole horizontal portion is fully loaded, while the curved and inclined portions are still entirely empty. The minimum curvature necessary to avoid lift of the belt can be calculated from the weight of the belt per ft. and its momentary tension at the point of curvature (see p. 39). Jeffrey Manufacturing Co. gives the formula for a fully loaded belt, $R = 1.1P/w$, in which R = minimum radius, ft.; P = total belt tension at point of curvature, lb.; w = weight of empty belt, lb. per lin. ft. For full but intermittent loading, the numerical factor should be increased to 1.3 to 1.5. Weight of belt is best ascertained from manufacturers' catalogues. Table 15 gives approximate weights of one standard brand, having 1/8-in. top and 1/32-in. bottom cover, in lb. per lin. ft. and per in. of width; for other thicknesses of cover, add or subtract 0.01733 lb. per lin. ft. per in. width for each 1/32 in. of rubber.

Power consumption depends upon the load carried, the inclination and speed of the belt, the spacing and kind of idlers and size of pulleys. The general formula is Hp. = $PS/33{,}000$, where P = pull on belt in lb. and S = speed in ft. per min. P is made up, in horizontal conveyors, of idler friction due to the empty belt plus that due to the load and may be written as $P = Lfd(X + Y + Z)/D$ where L = length in ft. c-c. of tail and head pulleys; d and D are the diameters, respectively, of the idler bearings and the idler pulleys; f = coefficient of idler-bearing friction; X = weight of revolving part of idlers per ft. of length including troughing and return, Y = weight of 2 ft. of empty belt (carrying plus return) and Z = weight of material on 1 ft. of belt. By experiment, $f = 0.35$ for ordinary grease-lubricated idlers. $Z = 2000T/60S = 33.3T/S$, where T = tons per hour. Clearing and substituting, Hp. $= \frac{LSd}{100{,}000D}\left(X + Y + \frac{33.3T}{S}\right)$ (approximately).

Fig. 53 correlates length, width, speed, and power for fully loaded horizontal conveyors equipped with roller-bearing idlers; for plain bearings, add 80% to power. For an inclined conveyor the weight of the down-going belt balances that of the rising belt, so that the added power consumption is only that due to the load of material. This may be written Hp. $= 2000TH/60(33{,}000) = TH/990$ (or, more conveniently, $TH \times 0.00101$), where H = lift in ft. The additional friction losses at the end pulleys require allowance. Fig. 54 plots the percentages by which the total driving-shaft power (for horizontal travel plus lift, if any), ascertained as above, should be increased to cover pulley losses, assuming a single-pulley head drive; the data assume the pulleys to be mounted on roller-bearing pillow blocks; for plain bearings, double the allowances. Tandem or center drives require a further addition of 4% for plain, or 2% for roller-bearing pillow blocks on the extra pulleys. If a tripper is employed, pulley friction has to be overcome in both fixed and automatic types, the latter also drawing its motive power from the conveyor belt; Fig. 55 shows the power requirements for both types, excluding that involved in lifting the material an additional distance which may be taken as averaging 5 ft. (corresponding to Hp. = $5T/990$). Transmission and speed reduction incur a power loss of about 5% for each belt or open gear reduction; the same allowance will cover the loss in a modern oil-enclosed reducer regardless of the number of reductions. An approximate rule, frequently used for horsepower of the conveyor alone, is: Hp. = 2% *of the tons per hr. for every 100 ft. of length plus 1% of the tons per hr. for each 10 ft. vertical lift*, or Hp. = $(0.02L/100 + 0.01H/10)T$.

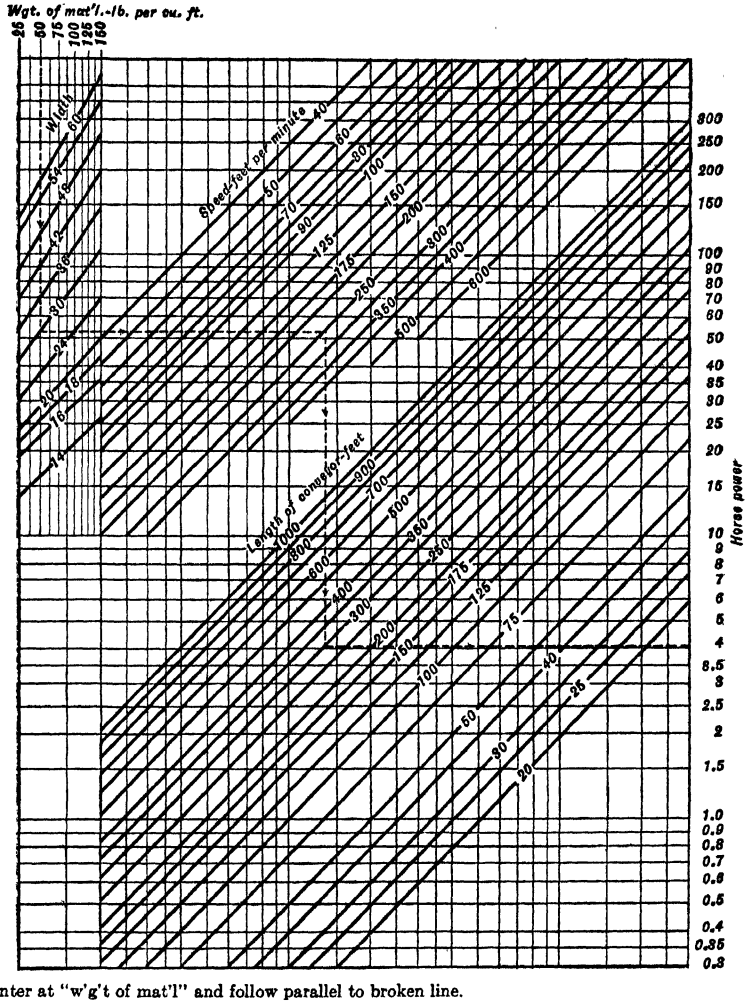

Enter at "w'g't of mat'l" and follow parallel to broken line.

FIG. 53. Power required at drive shaft of fully loaded horizontal belt conveyor with roller-bearing idlers; excluding terminal and tripper losses (*after Robins*).

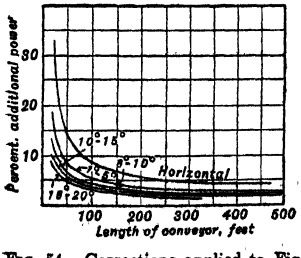

FIG. 54. Corrections applied to Fig. 53 for power losses at head and tail pulley.

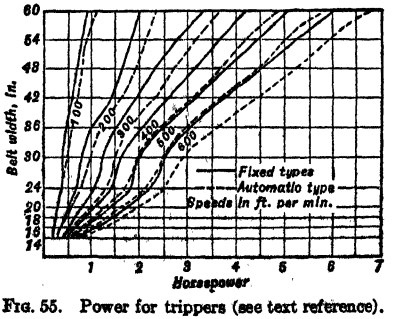

FIG. 55. Power for trippers (see text reference).

Laboratory tests indicate that the coefficient of friction for oil-lubricated idlers is about 60%, and for roller-bearing idlers 25% of that for grease-lubricated idlers. This does not mean, however, that 0.21 and 0.09 respectively can be substituted for 0.35 (= f above), on account of the fact the 0.35 takes into account many things besides actual idler friction. *Hetzel* gives the following empirical formula for long conveyors with ball-bearing idlers: Hp. = $(0.0087L/100 + 0.01H/10)T$. Table 16 gives power consumed by horizontal conveyors in a few American mills; Table 14 gives corresponding data on some conveyors operating at notably steep inclinations.

Table 16. Power consumed by horizontal belt conveyors (Q)

Plant	Width, in.	Length, ft., c-c.	Bearings	Drive	Tons per hr.	Hp. consumed	Hp-hr. per ton per 100 ft. of travel
Cons. Min. & Sm. Co.	30	67 1/2	*Af*	*B, G*	175	2.7	0.0229
Chino	42	360	.....	*R*	750	35.0	0.0130
Miami Copper Co.	36	44 3/4	.....	.....	700	6.0	0.0192
	36	91 1/2	.....	.....	780	15.0	0.0210
	36	476	.....	.....	780	35.0	0.0090
Britannia	30	155	*Pl*	Belt	300	26.0	0.0559
	42	125	*Pl*	Belt	700	31.0	0.0354
	30	165	*Pl*	Belt	250	7.5	0.0182
	30	210	*Pl*	Belt	250	10.0	0.0190
Conda	24	167 3/4	.....	.....	60	5.5	0.0545
Nev. Consol., Ray	24	26	*Af*	V-belt	125	1.1	0.0340
	42	103	*Af*	*C, R*	500	9.0	0.0175
Utah Copper Co., Arthur	32	290	.....	*Dr*	1,000	18.6	0.0064
Magna	54	324	.....	*Dr*	1,500	19.3	0.0040
	30	289	.....	*Dr*	333	19.3	0.0200
	30	157	.....	*Dr*	50	4.8	0.0611
San Francisco de Mexico	16	72	*Pl*	*B, G*	25	2.7	0.150
	22	116	*Pl*	*B, G*	100	2.4	0.0207
Sherritt-Gordon	48	50	*Af*	*C*	200	2.0	0.020
	30	37	*Af*	*R*	200	3.0	0.0405

Af = anti-friction bearings. *B* = belt-driven. *C* = chain-driven. *Dr* = double-reduction gear. *G* = gear. *Pl* = plain bearings. *R* = reducing gear, various types.

Maximum belt tension. Having ascertained the power to be applied to the driving pulley, by summing all of the factors enumerated above except transmission and reduction losses, the effective or power pull is $P_p = \dfrac{\text{Hp.} \times 33{,}000}{S} = P_t - P_s$, where S = ft. per min., P_t = maximum tension on the belt, which occurs on the tight side of the pulley, and P_s = tension on the slack side, taking P_p, P_t, and P_s in lb. To induce motion without slipping requires a certain ratio R between maximum and effective pulls, or $R = P_t/(P_t - P_s)$; whence $P_t = RP_p$. The value of R depends upon the arc of contact and the coefficient of friction between belt and pulley, the latter usually accepted as 0.25 for bare cast-iron pulleys and 0.35 for rubber-lagged pulleys. Fig. 56 gives values for R adopted by the principal manufacturers. If a 180° turn over a single pulley will not develop the required pull, one of the driving methods illustrated in Fig. 57 may be adopted; tandem drive is often installed at or near the mid-length of a conveyor. Tandem pulleys should

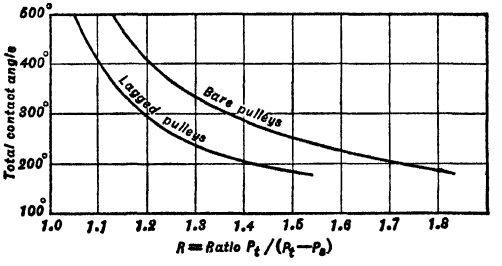

FIG. 56. Factors for converting effective pull to maximum belt tension.

be geared together; where great power is required, each of the pulleys may be driven by a separate motor.

Some additional tension is introduced by the weight of the belt when it is inclined at more than a very small angle. In Fig. 58, if B = weight of each run of the belt and i is the angle of inclination, the tension at the head pulley due to each run of the belt = $B \sin i$. The load on the idlers is $B \cos i$, and their resistance to turning under this load, *i.e.*, their resistance to a down hill run, is $(fdB \cos i)/D$. The added tension on each run is, therefore,

$$P_i = B\left(\sin i - f\frac{d}{D}\cos i\right).$$

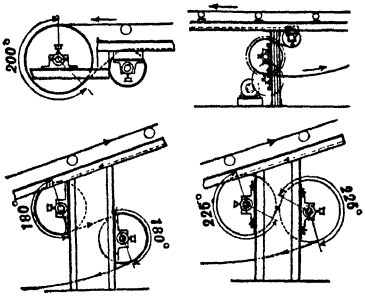

FIG. 57. Driving arrangements for conveyor belts.

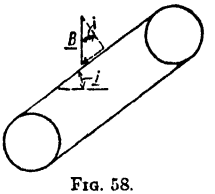

FIG. 58.

Selection of belt. Table 17 gives recommended safe working tensions, in pounds per inch of width per ply, for rubber belts operating under two sets of conditions: (*A*) Fed mechanically, overloading prevented, take-up device to avoid over-stressing; also applies to temporary and other conveyors the life of which is not important. (*B*) Not fed mechanically, overloading and overstressing possible, maximum life desirable; also applies to any conveyor having a vertical lift of 100 ft. or more, due to additional tension caused by weight of descending run of the belt. The maximum belt tension P_t having been computed, as above, select a safe working tension t from Table 17; then the required number of plies = $P_t/(t \times$ width, in.). Fig. 59 correlates the data applicable to a belt composed of 28-oz. duck, given the driving power.

Table 17. Safe working tensions in rubber conveyor belts (*Robins*)

[Pounds per inch width per ply]

Weight of duck, oz.	Condition *A*	Condition *B*
28	23	20
32	27	23
36	30	25
42	40	35

Feed to conveyors should be so delivered that when it reaches the belt it will be moving in the same direction as the belt, and as nearly as possible at the same velocity. This can be accomplished by inclining the feed chute at such an angle that the horizontal component of velocity of the rock leaving will be about the same as the speed of the belt, but as this may develop an undesirably high falling velocity, injurious to the belt, the slope is generally a compromise, or special arrangements are provided to relieve the belt of vertical shocks. Large pieces falling directly on the belt are liable to cut it.

Special feed chutes may have a screen or grate in the bottom so that finer material falls on the belt first and acts as a cushion for larger pieces which will not pass the grate; clogging of the grate makes this device ineffective and it will not be satisfactory for all materials. A chute with sides converging toward the end, or a V-notch in the chute bottom, acts similarly and does not clog. The end of the chute may be made in a long curve ending at a tangent parallel to the belt and may thus present the feed with little vertical force. This requires giving the feed sufficient velocity to pass along the curved part; considerable wear will take place on the chute. Other specially shaped chutes designed to keep the finer material near the bottom are also used.

The feed should be so delivered that it makes first contact with the belt just beyond an idler pulley; the belt then yields sufficiently to take up impact gradually and to avoid cutting; rubber-cushioned idlers are available to serve the same purpose. To bring the material up to speed, especially if the belt is traveling fast, results in considerable slipping and tumbling with corresponding wear; this is more pronounced with inclined belts.

Skirt boards should always be provided to keep material from running off the belt before it has become settled on it. They are made of wood or steel and have a strip of belting nailed or bolted onto their lower edges, to close the space between the boards and the belt. On level conveyors skirt boards need be only 3 or 4 ft. long, but on rapid or inclined conveyors they should be longer; on steep inclined conveyors carrying coarse material they are sometimes provided the entire length to prevent spill of any pieces that slide or roll back.

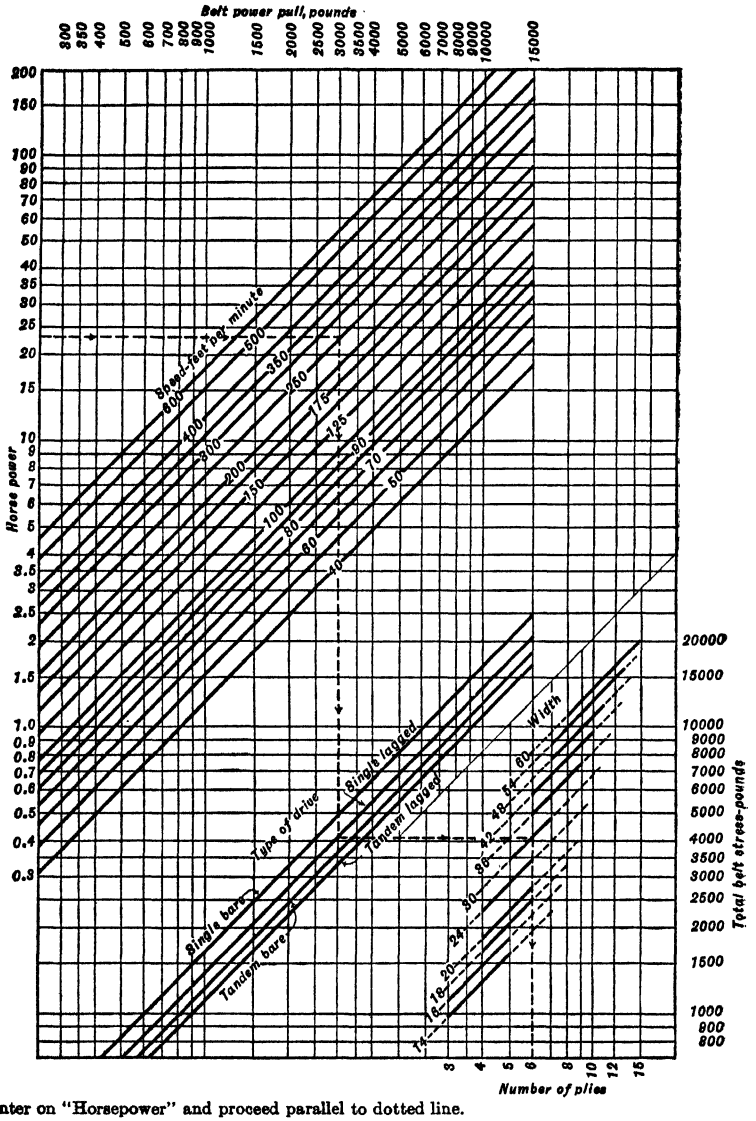

Enter on "Horsepower" and proceed parallel to dotted line.

FIG. 59. Plies of 28-oz. duck required in conveyor belts of standard widths.

Discharge of conveyors may be by fall at the head pulley or by some device which removes the load before the head pulley is reached. The most satisfactory device of this sort is a TRIPPER (Fig. 60). This is usually mounted on wheels running on tracks so that the load can be delivered at several points, as over a long bin or into several bins; the discharge chute delivers to one or both sides of the belt. Trippers may be moved by hand, by head and tail ropes from a reversible hoisting drum, or by individual motor mounted on the tripper, or they may be

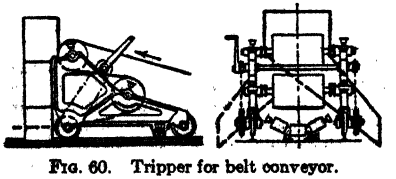

FIG. 60. Tripper for belt conveyor.

automatic, traveling backward and forward under power derived from the belt. Plows or scrapers to remove the load cause extra wear on the belt and when scraping only to one side they cause the belt to run out of line. The length of additional belt for travel around tripper pulleys ranges from 10 ft. for small to 14 ft. for larger trippers. For additional power required by trippers, see Fig. 55.

Trajectory of end discharge. In some cases, as in design of a receiving chute, it becomes important to calculate the trajectory of the falling stream; this, as well as the point of departure from the belt, depends upon belt speed, pulley diameter, and coefficient of friction of the material against the belt, the latter being affected by the nature of the material and its moisture content. Computations fail with sticky materials.

Gates (*141 #1 J 55*) gives the diagram in Fig. 61 for ascertaining the point of departure of dry materials, assumed to be moving at belt velocity and in a direction tangent to the pulley at that point. Thus *A* and *B* indicate, respectively, the points of departure from a 46-in. pulley at 34 r.p.m. (veloc., 409 f.p.m.), and from an 18-in. pulley at 40 r.p.m. (veloc., 188.5 ft. per min.). Angles may be scaled from the chart. If the r.p.m. curve touches or falls inside the diameter curve, the material merely drops vertically.

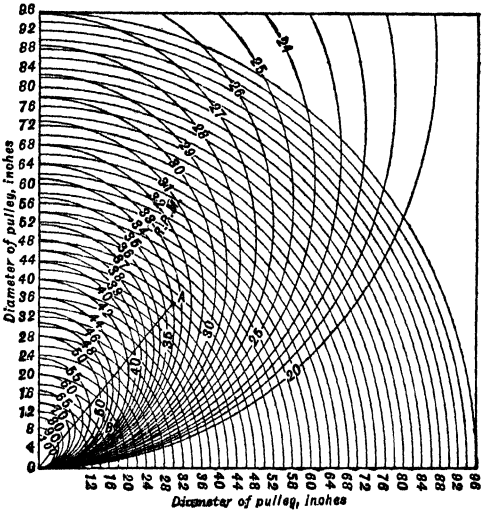

FIG. 61. Gates diagram for locating point of discharge from a belt conveyor.

Booth (*135 J 552*), at the N'KANA mine, observed that actual trajectories invariably fell outside those calculated on the assumption that ore starts its fall at belt speed. In one case with a speed of 383 f.p.m., and pulley diam. plus belt thickness, 42 1/2 in., the stream was 8 1/2 in. outside its theoretical position when it had fallen 53 in. below center of pulley. The discrepancy was traced (with mathematical support) to downward sliding of the ore on the belt after passing the angle corresponding to its coefficient of friction; as its motion was still constrained to circular, this added velocity increased its centrifugal momentum at the point of departure, with the effect noted. Booth gives the graph in Fig. 62. Enter the bottom of the rectangular diagram at the belt velocity in ft. per min. Move up to the radial line corresponding to pulley diameter, and thence horizontally to extreme left. From this point draw a line tangent to the curved line at lower right, and from corner *A* draw a line parallel with this tangent to cut the vertical line *B;* at intersection, read the angular displacement (from vertical) at the point of departure. With this angle, re-enter the left side of the rectangular chart; move horizontally to intersect the pulley-diameter line, and thence vertically downward to read actual ore velocity at point of departure. For illustration, the dotted lines give the procedure for a belt moving at 358 f.p.m. over a 30-in. pulley, showing that the ore leaves the belt with a velocity of 372 f.p.m. (or 14 f.p.m. faster than belt travel) at a point 19° beyond the vertical. Both of these factors having been ascertained, the trajectory may then be plotted by the conventional method shown in Fig. 63. Draw a circle at any convenient scale representing pulley diameter plus belt thickness and locate the point of departure. At this point, *P*, construct a tangent, on which lay off equal distances *L* to the scale: 0.01 in. = 1 f.p.m. of ore velocity at *P*. Number the dividing points consecutively, and from each one drop an ordinate as scheduled in Table 18; lower ends of the ordinates trace the trajectory.

Table 18. Ordinates for tracing trajectories
(see Fig. 63)

No.	In.	No.	In.	No.	In.
1	0.50	6	17.375	11	58.375
2	1.875	7	23.375	12	69.50
3	4.875	8	30.875	13	81.875
4	7.75	9	39.125	14	94.50
5	12.125	10	48.25	15	108.50

If, in Fig. 63, the velocity and diameter lines intersect above the top of the diagram, start the trajectory horizontally from the top of the pulley or (with an inclined belt) in the projected direction of the belt (whichever throws farther), using belt speed in the determination of *L*.

Cleaning the belt of material that sticks is done by scrapers or revolving brushes placed under the head pulley or under the first pulley of a tripper; water sprays are used in some instances. Some types of revolving brushes are made of heavy fiber bristles mounted on a wooden core supported on a shaft which receives power from the conveyor drive shaft. Another type consists of spirally molded rubber mounted on a steel tube carried by a driving shaft. This receives power through a spur-gear transmission totally enclosed in an oil-tight case and driven either from the conveyor drive shaft by chain

and sprocket, or individually by a small electric motor. Bristle brushes wear out rapidly and are suitable only for nonabrasive materials; neither are they applicable to belts handling sticky material, for which the rubber brush is preferable.

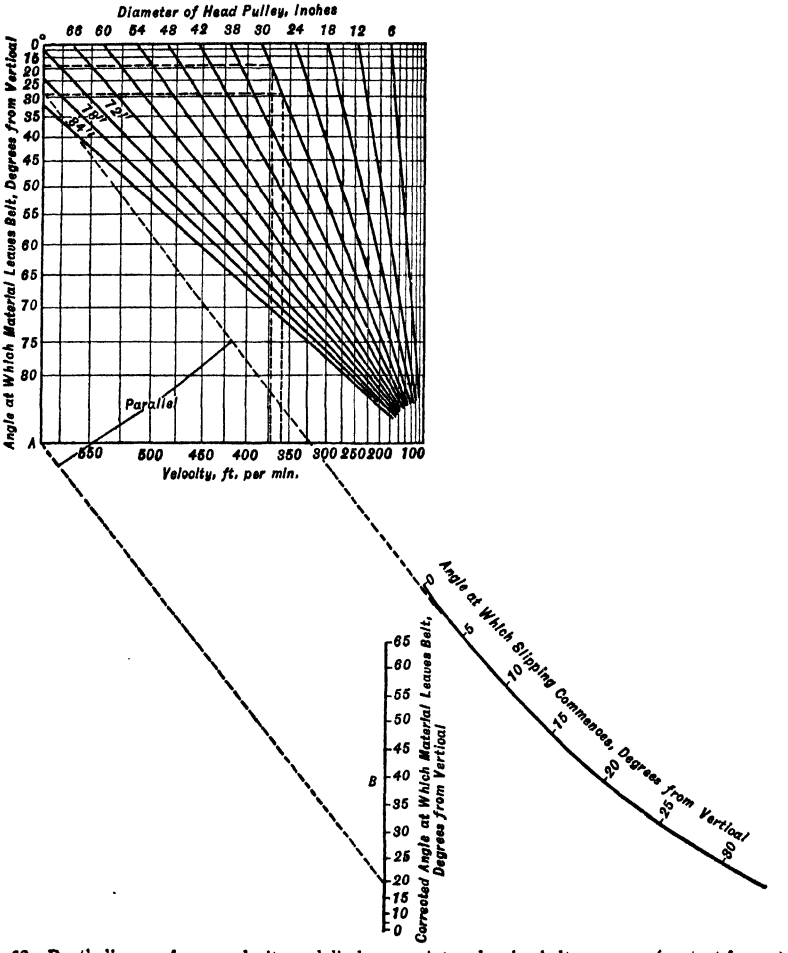

FIG. 62. Booth diagram for ore velocity and discharge point on leaving belt conveyor (see text for use).

Support for a conveyor usually consists of wood or steel bents with longitudinal stringers across the caps on which the idlers are mounted; short conveyors are readily supported on the stringers alone. A light flooring (7/8-in. boards or thin steel sheet) is generally placed across the stringers between the upper and lower run of the belt to prevent material from falling onto the return side and possibly cutting the belt as it passes around the tail pulley.

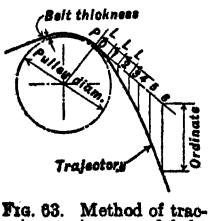

FIG. 63. Method of tracing trajectory of belt-conveyor discharge (see Table 18).

Performance of a very large installation at H. C. FRICK COKE CO. Colonial mine, East Roscoe, Pa. (*71 A 1123*), is shown in Table 19. All of the conveyors were 48-in. except No. 20, which was 60-in. The duty was transportation of run-of-mine bituminous coal from underground loading chutes to barges 4.3 mi. distant.

Table 20 gives details of an elaborate system of belt conveyors installed by PALMETTO QUARRIES CO., Columbia, S. C., for handling crushed granite from quarry floor, through crushing, screening, and washing plants, to RR. cars (*54 #10 PQ 27*). Conveyors *B*, *C*, and *D*, all inclined at 18°, were substituted for derrick and cableway previously used for hoisting from the bottom of the quarry, about 230 ft. below ground level.

Table 19. Conveyor installation at H. C. Frick Coke Co.

CONVEYOR DATA

Belt number	1 Length, feet	2 Net rise or drop, feet	3 Estimated weight of running parts empty, tons	4 Estimated weight of coal at 1,220 tons per hour, tons	5 Estimated weight of running parts loaded, tons	6 Tension load carried by pulley bearings, tons	7 Horsepower of empty conveyor	8 Horsepower to raise live load	9 Running horsepower without lift	10 Total running horsepower	11 Horsepower of electric motor
1	786	43.42	37	31	68	17	11	+60	51	111	150
2	417	8.30	20	17	37	9	17	+12	28	40	50
3	321	4.85	17	13	30	9	5	+ 7	23	30	50
4	1,029	19.88	45	41	86	19	15	+27	65	92	125
5	1,101	21.07	47	44	91	20	16	+29	69	98	125
6	1,496	4.20	60	60	120	24	21	+ 6	91	97	150
7	1,402	−12.23	57	56	113	24	20	−17	114	97	150
8	1,500	1.47	60	60	120	25	21	+ 2	91	93	150
9	938	11.09	42	37	79	18	14	+15	59	74	100
10	1,410	12.33	57	57	114	23	20	+17	86	103	150
11	1,514	3.26	61	60	121	25	22	+ 5	92	97	150
12	1,320	29.64	54	53	107	23	19	+40	81	121	175
13	1,326	22.89	55	53	108	22	19	+31	81	112	175
14	1,342	24.42	55	54	109	22	19	+33	82	115	175
15	1,296	25.36	54	52	106	22	18	+35	80	115	175
16	1,263	27.92	53	50	103	21	18	+38	77	115	175
17	1,366	19.12	56	55	111	23	19	+26	84	110	175
18	1,301	34.04	54	52	106	22	18	+46	80	126	175
19	1,244	36.19	52	50	102	21	18	+49	77	126	175
20	558	20.20	31	34	65	10	11	+27	34	61	100
21 and 22	60	.....	.....	.....	.....	.....	.....	.....	.....	.....	1 @ 15 & 1 @ 5 to each
Total	22,930	357.42	.....	.....	.....	.....	.....	.....	.....	1,933	.....

Belt number	12 Start horsepower empty 15 sec.	13 Start horsepower loaded 15 sec.	14 Initial tension, lb.	15 Belt tension running, lb.	16 Belt tension start 15 sec. loaded, lb.	17 Estimated travel of loaded belt to stop		18 Lineal feet of belt required, net	19 Number of carriers required	20 Number of return rollers
						From feet	To feet			
1	70	200	1,500	8,050	13,350	23	35	1,636–6	225	78
2	39	87	2,000	4,320	7,210	35	82	867–6	120	41
3	32	69	1,500	3,240	5,580	38	88	675–6	92	32
4	87	204	1,500	6,950	13,660	35	73	2,113–6	294	102
5	91	217	1,500	7,290	14,390	35	73	2,258–0	315	110
6	117	234	2,000	7,740	17,100	46	156	3,047–6	428	149
7	111	245	2,000	7,800	16,610	43	349	2,858–0	401	140
8	117	250	2,000	7,540	16,900	48	179	3,055–6	429	150
9	81	176	1,500	5,840	12,000	40	102	1,931–0	268	93
10	111	254	2,000	8,220	17,110	40	105	2,875–0	403	140
11	120	255	2,000	7,710	17,150	47	164	3,082–0	433	150
12	105	262	2,000	9,230	17,580	32	65	2,695–0	378	131
13	107	254	2,000	8,690	17,110	35	77	2,707–0	380	132
14	107	258	2,000	8,870	17,370	35	74	2,740–0	384	134
15	104	253	2,000	8,810	17,080	34	72	2,648–0	371	129
16	103	250	2,000	8,850	16,880	33	66	2,582–0	361	126
17	109	255	2,000	8,540	17,200	37	87	2,788–0	391	136
18	104	265	2,000	9,510	17,780	31	59	2,659–0	372	130
19	101	260	2,000	9,500	17,460	30	55	2,542–0	356	124
20	35	103	3,000	8,250	11,820	14	23	1,151–0	197	54
21 and 22	.....	.....	.....	.....	.....	.....	.....	134–0 each	.....	.....
Total	.....	.....	.....	.....	.....	.....	.....	47,080–0	6,598	.....

Table 19. Conveyor installation at H. C. Frick Coke Co.—*Continued*

ACTUAL TEST DATA AFTER THE INSTALLATION

Belt number	1 Length, feet	2 Lift, feet	3 Date of test	4 Tons carried for day	5 Total kilowatt-hours for day	6 Time that belt ran, minutes	7 Time that belt carried, minutes	8 Average load in tons per hour
1	786	43.4	8– 4–24	6,346	460	368	352	1,080
2	417	8.3	8– 5–24	6,418	174	360	327	1,180
3	321	4.8	8– 7–24	6,460	144	350	326	1,192
4	1,028	19.9	8–11–24	6,500	410	395	350	1,115
5	1,101	21.1	8–12–24	6,854	420	390	333	1,235
6	1,496	4.2	8–14–24	7,122	410	370	350	1,222
7	1,402	−12.2	8–15–24	6,884	330	395	389	1,060
8	1,499	1.5	8–16–24	6,750	400	415	361	1,120
9	939	11.1	8–19–24	7,032	358	376	361	1,142
10	1,410	12.3	8–21–24	7,883	440	389	354	1,336
11	1,513	3.2	8–23–24	7,250	400	388	359	1,212
12	1,321	29.6	8–25–24	7,271	530	375	340	1,282
13	1,325	22.9	8–26–24	7,252	480	374	342	1,272
14	1,342	24.4	8–28–24	7,085	490	377	345	1,232
15	1,296	25.4	8–29–24	7,341	500	367	334	1,320
16	1,263	27.9	8–30–24	7,939	430	400	350	1,362
17	1,366	19.1	9– 1–24	6,225	440	355	340	1,100
18	1,301	34.0	9– 2–24	7,235	520	370	363	1,196
19	1,243	36.0	9– 4–24	7,847	650	375	353	1,334
20	558	20.7	9– 5–24	7,421	307	440	283	1,575

Belt number	9 Kilowatt demand of empty belt	10 Additional kilowatts above empty demand to carry average load	11 Kilowatts to lift load average	12–13 Level belt demand measured as additional power above empty demand, Column 10, less 11		14–15 Constant kilowatt per 100 tons per 100 ft. based on Column 12		16 Kilowatts per 100 ft. of conveyor, empty belt
				Kilowatt	Horse-power	Kilowatt per 100 tons per 100 ft.	Horse-power per 100 tons per 100 ft.	
1	19.2	51.6	39.8	11.8	14.2	0.139	0.167	2.44
2	12.8	14.1	8.3	5.8	7.0	0.118	0.142	3.35
3	12.8	9.3	4.9	4.4	5.3	0.115	0.138	4.00
4	24.0	35.0	18.9	16.1	19.3	0.140	0.168	2.33
5	27.0	36.7	22.2	14.5	17.5	0.105	0.128	2.45
6	31.1	29.0	4.4	24.6	29.5	0.134	0.178	2.09
7	28.8	17.5	−11.0	28.5	35.2	0.192	0.230	2.05
8	28.8	27.9	1.4	26.5	31.8	0.158	0.189	1.92
9	25.6	26.0	10.8	15.2	18.2	0.142	0.170	2.73
10	24.0	37.0	14.0	23.0	27.6	0.122	0.147	1.70
11	28.8	30.2	3.3	26.9	32.2	0.146	0.176	1.90
12	32.0	52.0	32.3	19.7	23.6	0.116	0.139	2.42
13	26.5	47.2	24.8	22.4	26.9	0.132	0.159	2.00
14	26.0	49.0	25.6	23.4	28.0	0.141	0.169	1.94
15	24.0	49.9	28.5	21.4	25.7	0.125	0.150	1.85
16	26.4	50.1	32.3	17.8	21.4	0.103	0.124	2.09
17	26.0	42.0	17.9	24.1	28.9	0.160	0.192	1.90
18	24.0	53.3	34.6	18.7	22.5	0.120	0.144	1.84
19	28.8	71.7	40.8	30.9	37.1	0.186	0.223	2.32
20	12.8	48.7	27.8	20.9	25.1	0.238	0.285	2.30

Table 20. Belt conveyors at Palmetto granite quarry and crushing plant, Columbia, S. C.

Mark	Max. size of stone, in.	Tons per hr. *b*	Belt width, in.	Length, c-c., ft.	Rise, ft.	Speed, ft. per min. *c*	Hp. required	Motor hp. installed *d*	Drive *e*	Head pulley, diam. × face	Tail pulley, diam. × face	Snub pulley, diam. × face	Spacing of idlers, ft.		Belting					Take-up, type, and travel, in.
													Troughing	Return	Total length, ft.	Plies	Duck, oz.	Top cover, in.	Back cover, in.	
A	10	200	42	252.8	75.2	200	23.85	30	Chain *f*	30×44 *g*	22×44	*i*	3 3/4	9 1/3	530	6	28	1/4	1/16	*H-g*, 36
B	4 1/2	175	24	377.3	116.6	300	25.05	30	Chain	36×26 *h*	24×26	20×26	4 1/2	9 3/4	763	6	32	5/32	1/32	*H-g*, 36
C	4 1/2	175	24	271.7	84.0	300	20.00	25	Chain	30×32 *h*	20×26	20×26	4 1/2	9 3/4	550	5	28	5/32	1/32	*H-g*, 36
D	4 1/2	175	24	271.7	84.0	300	20.00	25	Chain	30×26 *h*	20×26	20×26	4 1/2	9 3/4	550	5	28	5/32	1/32	*H-g*, 36
E	4 1/2	325	30	135.3	41.8	300	16.17	25	Chain	30×32 *h*	20×32	20×32	4 1/4	8 1/2	277	5	28	3/16	1/32	*S*, 30
F	1 1/4	150	24	160.5	49.6	200	8.92	10	Chain	24×26	20×26	.....	4 1/2	8 1/2	327	5	28	1/8	1/32	*S*, 30
G	3	150	24	159.4	49.3	300	9.24	15	Chain	24×26	20×26	.....	4 1/2	9 3/4	325	4	28	1/8	1/32	*H-g*, 36
H	3	120	18	89.6	0	220	0.75	3	V-belt	20×20	12×20	.....	4 1/2	9	183	5	28	1/8	1/32	*S*, 18
I	1 1/2	150	24	81.2	23.5	200	4.30	5	V-belt	20×26	12×26	.....	4 1/2	9	167	4	28	1/8	1/32	*S*, 18
J	3/4	150	24	80.3	22.5	200	3.00	5	V-belt	20×26	12×26	.....	4 1/2	9	165	4	28	1/8	1/32	*S*, 18
K	1/2	150	18	80.3	22.5	280	4.13	5	V-belt	20×20	12×20	.....	4 1/2	9	165	5	28	1/8	1/32	*S*, 18
L	3/8	120	18	80.4	21.3	220	3.39	5	V-belt	20×20	12×20	.....	4 1/2	9	165	5	28	1/8	1/32	*S*, 18
M	1/8	54	14	150.0	0	180	2.00	3	V-belt	16×16	12×16	*j*	4 1/2	9	304	4	28	1/8	1/32	*S*, 18
N	3	450	30	407.0	−2.0	300	9.25	15	Chain	24×32	20×32	.....	4 1/4	8 1/2	820	5	28	1/8	1/32	*H-g*, 36
O	3	450	30	276.3	85.4	300	44.45	50	Chain	36×32 *h*	24×32	20×32	4 1/4	8 1/2	561	6	36	3/16	1/16	*H-g*, 36
P *a*	3	450	30	69.7	0	300	1.6	5	V-belt	20×32	20×32	.....	4 1/4	8 1/2	145	5	28	1/8	1/32	*S*, 12
Q	3	450	30	205.2	63.4	300	33.16	40	.....	30×32 *h*	20×32	20×32	4 1/4	8 1/2	417	6	32	1/8	1/32	.....
X	3	150 to 300	42	10.0	0	45	1.57	5	Chain	18×44	18×44	.....	1 1/2	5	25	6	28	1/8	1/32	*H-g*, 36

a Reversible.
b 94 lb. per cu. ft.
c Constant within ± 5%.
d Totally enclosed, fan-cooled, squirrel-cage induction type; constant speed, 3-phase, 60-cycle, 550-volt.
e Through double-reduction herringbone-gear speed reducers.
f Tandem drive.
g Magnetic pulley.
h Lagged; others, bare cast-iron.
i Has three @ 12×44-in. bend pulleys: at head, tail, and drive.
j Has two 12×16-in. bend pulleys.
H-g = Horizontal, gravity take-up.
S = Screw take-up.

Downhill belt conveying. At PERMANENTE cement plant, Calif. (*148 A 374*), part of an 1,150-ft. fall for <6-in. rock from quarry to plant is obtained on three successive 36-in. belts (with two transfer stations): No. 1, 1,630 ft. long @ − 4° 30′; No. 2, 2,225 ft. @ − 6°; No. 3, 1,300 ft. @ − 10° 30′; total fall, 600 ft. Each belt moves at 500 f.p.m. and is controlled by a 200-hp. motor; when loaded to capacity, the three conveyors return about 260 kw.

Cost of belt conveying. Table 21 gives examples of cost, together with the factors on which cost chiefly depends; all but a few of the conveyors are equipped with antifriction bearings.

Table 21. Cost of belt conveying (*Q*)

Plant	Length c-c., ft.	Rise, head to tail, ft.	Horsepower	Tons per hr.	Cost, ¢ per ton
Cons. M. & S., Canada	67 1/2	0	2.7 *c*	175	0.015
	93 1/3	29	23 *c*	350	0.0074
	71 1/2	23	19 *c*	350	0.0042
	81 1/2	23	50 *c*	1,100	0.0056
	85	23	19 *c*	750	0.0066
	192 1/3	51	52 *c*	350	0.018
Tenn. Copper Co.	362	88	38 *i*	200	0.0005
	93 1/3	33	3 1/2 *c*	3	0.0020
	104 1/3	34	4 *c*	18	0.0006
Chuquicamata, Chile	428	79	300 *i*	1,200	0.10
	182	54	50 *i*	540	0.04
	372	18	40 *i*	480	0.08
	371	26	120 *i*	1,030	0.02
	1,257	20	300 *i*	1,590	0.09
Homestake	60 1/2	0	25 *i*	200	0.032
Cal. & Hecla, Lake Linden	280	52	40 *c*	125	0.020
Tamarack	582	87	75 *i*	85	0.033
S. Fran. de Mexico	170	60	20 *c*	100	0.050
	72	0	2.7 *c*	25	0.130
	116	0	2.4 *c*	100	0.045
Copper Range, Freda	93 3/4	33 3/4	25 *i*	388	0.108
	13	0	5 *i*	97	0.015
	80	26 1/2	10 *i*	251	0.065
	103 1/4	36 2/3	15 *i*	105	0.055

c Power consumed. *i* Power installed.

7. PAN AND APRON CONVEYORS

Pan conveyors are used for lump material that would cut a belt, or for finer material when loading pressures would be excessive for belts, or when, on account of low speed imposed by other conditions, belt tension is excessive. They consist of articulated steel pans carried on chains; the chains run over head and tail sprockets and are supported on the run by wheels or rollers running on tracks on the supporting frame. Different types of pans are shown in Fig. 64.

The shallow V-shaped pan *a* has the advantage that it discharges higher at the head sprocket than the other types, but the stiffness is not so great on wide conveyors as that of the deeper pans and it

Table 22. Capacity of pan and apron conveyors at 20 ft. per minute (*a*) (*After Stephens-Adamson*)

Effective width, inches	Depth of material on conveyor, inches														
	2	3	4	5	6	7	8	10	12	14	16	18	20	24	30
12	10	15	20	25	30	35	40	50	60	70	80	90	100	120	150
18	15	22	30	37	45	52	60	75	90	105	120	135	150	180	225
24	20	30	40	50	60	70	80	100	120	140	160	180	200	240	300
30	25	37	50	62	75	87	100	125	150	175	200	225	250	300	375
36	30	45	60	75	90	105	120	150	180	210	240	270	300	360	450
42	35	52	70	87	105	122	140	175	210	245	280	315	350	420	525
48	40	60	80	100	120	140	160	200	240	280	320	360	400	480	600
54	45	67	90	112	135	157	180	225	270	315	360	405	450	540	675
60	50	75	100	125	150	175	200	250	300	350	400	450	500	600	750
72	60	90	120	150	180	210	240	300	360	420	480	540	600	720	900

a Based on material weighing 100 lb. per cu. ft. For other specific weights and for other speeds capacities are in direct proportion.

cannot be used on as steep slopes (15 to 20° max.). Pan *b* can be used up to 25° slope; it is stiff and well suited for hardwood lining, as shown. With such lining the conveyor becomes substantially of the apron type and should not be used on slopes greater than 15°. Pan *c* can be used on slopes up to 30°.

Pans are made of 1/4- to 3/8-in. steel; they are replaceable on the chain links, but if wear is great they should be lined with metal or hardwood.

Chains are subject to great tension on account of the slow speeds at which the conveyors are usually run; working loads may run as high as 25,000 lb., but it is better to keep down to 8,000 to 10,000 lb. per sq. in. pin pressures, if possible. For light service, malleable roller chain is used (Fig. 72, *D*); for heavy service, steel-bushed roller chain; and for heavy feeder service, heavy all-steel roller chain.

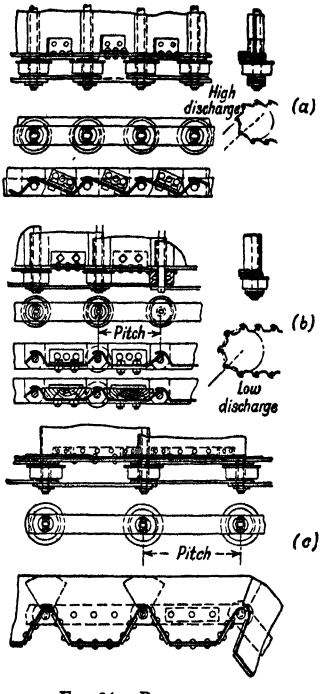

FIG. 64. Pan conveyors.

Apron conveyors (Fig. 65) are essentially very shallow pan conveyors; in some cases the pans have no ends and spill is prevented by skirt boards. They are used for horizontal transport or inclinations up to 10° or 12°. Their principal application is in heavy feeder service. The lighter type (*a*) has the rollers at the side of the pans; in the heavy type (*b*) the rollers are underneath in order to cut down the unsupported span.

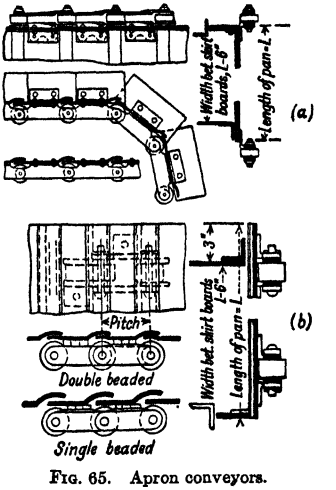

FIG. 65. Apron conveyors.

Speed of pan and apron conveyors in metal-concentration plants rarely exceeds 50 f.p.m. and when they are used as feeders, speed usually ranges between 2.5 and 10 f.p.m. In the latter service they should be driven by some variable-speed device capable of ready speed change and convenient stopping and starting. In coal handling, the usual speeds are from 50 to 100 f.p.m.

Capacity may be estimated from Table 22. Ordinarily actual capacities will be below the tabular figures on account of irregularities in feeding; these irregularities are greater the higher the speed of the conveyor.

Power consumption. Stephens-Adamson Co. states that the chain pull at the head sprocket with machined bushed-roller chain, well lubricated, is 12% of the combined weight of load and conveyor for level conveyors; with rough, malleable roller chain, the corresponding figure is 24%; inclination lessens the frictional resistance in proportion to the cosine of the angle with the horizontal. The following formulas give chain pull P and horsepower.

For steel-bushed roller chain:

$$P = (4L + 33.3H)T/S + 0.24LW,$$
$$\text{Hp.} = (TL/8250 + SLW/137{,}500 + HT/990)(1 + 0.1N).$$

For rough malleable chain:

$$P = (8L + 33.3H)T/S + 0.48LW,$$
$$\text{Hp.} = (TL/4125 + SLW/68{,}750 + HT/990)(1 + 0.1N),$$

where L = horizontal projection of conveyor, ft.; H = total vertical lift, ft.; W = weight per ft. of conveyor, lb.; T = tons of material carried per hr.; S = speed, ft. per min.; N = number of gear-speed reductions. Weights of a standard make of apron conveyor (excluding terminals) with malleable-iron links, per ft. of length c-c. and per in. of width, range from 2 to 1.55 lb. for light, 3 to 2.11 lb. for medium, and 4.44 to 2.75 lb. for heavy duty; with steel links, thimbles, and pins, weights range from 4.25 to 3.0 lb. for light, 4.67 to 3.83 lb. for medium, and 6.33 to 4.55 lb. for heavy duty; in each case, the smaller unit weight applies to the wider apron.

Table 23 gives data on a few installations of this type in American mills.

Table 23. Data on pan and apron conveyors (Q)

	Tennessee Copper Co.	Conda, Idaho	Chino	N. J. Zinc, Franklin	N. J. Zinc, Ogdensburg	Climax Molybdenum Co.	McIntyre Porcupine *c*
Length, c-c., ft.	8 1/6	10	20 1/4	87	13 1/2	13 1/2	26
Width, in.	54	24	96	16	48	48	48
Rise, c-c., ft.	0	0	5 1/4	3 1/2	5 1/4	0	0
Average slope, deg.	.....	.....	15	2 1/4	22 3/4	.....	.....
Head sprocket diam., in.	22 1/2	20	52 3/4	39	10	24	.....
Tail sprocket diam., in.	22 1/2	20	47	39	10	24	.....
Loaded idlers, spaced	.....	6 in.	2 ft.	.....	.....	.....	.....
Return idlers, spaced	.....	12 in.	3 1/3 ft.	.....	.....	.....	.....
Load, tons per hr.	200	30	1,000	91	90	500	150
Drive	Ratchet	Reducer	Gear red.	Chain	Gear motor	Chain	*d*
Power installed, hp.	*a*	3	30	10	3	10	7 1/2
Power consumed, hp.	.....	2	32	.....	.....	.....	.....
Max. size mat'l, in.	7	1/2	R.o.m.	0.1	24	12	7
Moisture in mat'l, %	2 1/2	5 1/2	2	dry	1	2 to 3	.....
Speed, ft. per min.	8	24	19	80	76	17	15 *e*
Fed by	Bin	Gate	Cars	Chute	Chute	Jaw crusher	Finger gate
Pan material	Steel	Steel	Mn	Steel	.....	.....	.....
Life of pans, yr	5 1/2	18	.....	6+	4 1/2	.....	.....
Life of sprockets	.....	.....	.....	450 da.	.....	.....	.....
Life of track	.....	.....	.....	320 da. *b*	.....	.....	.....
Trouble from sticking	None	.....	.....	None	.....	.....	.....

a A 10-hp. motor drives this conveyor and a 42-in. belt feeder 15 in. long.
b Life of wear strips on track.
c 134 J 472.
d Worm gear (22 : 1) and variable-speed reducer.
e Variable, 4 to 20.

Skirt boards for apron conveyors should be placed about 3 in. inside the edge of the pans (Fig. 65) and should clear the pans just enough to insure against rubbing; this excludes entry of any material underneath the boards that cannot be broken without stalling the conveyor. Heavy angles lined with plate or heavy timbers lined with longitudinal steel straps are the usual skirt-board material; they must be stiff enough, as above indicated, to crush small particles between them and the pans, if necessary, without any noticeable deformation.

8. BUCKET CONVEYOR

Bucket conveyor (Fig. 66) consists of a continuous line of buckets attached by pivots to two endless roller chains running on tracks and driven by sprockets. The buckets are

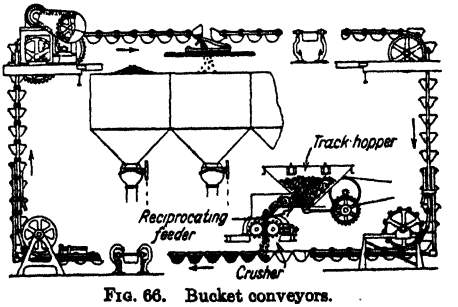

FIG. 66. Bucket conveyors.

so pivoted that they always remain in an upright position. The carrier can transport either horizontally or vertically and thus is both a conveyor and an elevator. The path

need not be rectangular but may be made almost any desired polygonal shape. Buckets are dumped by means of a cam placed to engage a shoe on the bucket, thus turning it into dumping position; the device can be placed anywhere on a horizontal or slightly inclined run. The buckets have overlapping edges to avoid spilling when fed from a continuous stream; a special tripper reverses the overlap on the return trip so that it will not interfere as the buckets start rising. The carrier has been used most in coal handling but it is a very satisfactory device for use at custom mills and smelters where several varieties of material must be moved in and out of separate bins; thus mixed charges can be made up with one carrier fed simultaneously from a number of chutes.

Sizes and usual speeds of Peck carriers (Link-Belt Co.) are shown in Table 24.

Table 24. Size, capacity and speed of Peck carriers (*Link-Belt Co.*)

Bucket dimensions, inches		Pitch of chain, inches	Carrying capacity of bucket, cubic feet	Speed, feet per minute
Pitch	Width			
18×15		18	0.68	30 to 40
18×18		18	0.81	30 to 40
18×21		18	0.94	30 to 40
24×18		24	1.68	40 to 50
24×24		24	2.24	40 to 50
24×30		24	2.80	40 to 50
24×36		24	3.36	40 to 50
30×24		30	3.50	45 to 60
30×30		30	4.37	45 to 60
30×36		30	5.25	45 to 60

9. FLIGHT CONVEYOR

Flight conveyors (Fig. 67) consist of chain-drawn scrapers or flights running in a trough through which they drag the material to be transported. The trough may be placed on either the upper or lower or on both runs of the chain. Flights are usually made of mal-

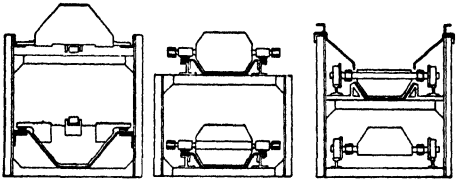

FIG. 67. Flight conveyors.

leable iron or steel, and the troughs of steel lined with steel or cast-iron wearing plates. Troughs may be placed at any angle from the horizontal to about 30°, but capacity is very much lowered as inclination increases.

Speed. The usual range is from 50 to 100 f.p.m.
Capacity may be estimated from Table 25.

Table 25. Capacity of flight conveyors (*After Stephens-Adamson*)

[Tons of coal per hour at 100 ft. per min.]

Size of flight, inches	Horizontal				Inclined		
	Spaced			Pounds carried per flight	Spaced 24 in.		
	16 in.	18 in.	24 in.		10 deg.	20 deg.	30 deg.
4×10	34	30	22	15	18	14	10
4×12	43	38	28	19	24	18	13
5×12	52	46	34	23	28	22	16
5×15	70	62	46	31	40	31	22
6×18	.....	80	60	40	49	40	31
8×18	.....	120	90	60	72	57	48
8×20	.....	.....	105	70	84	66	56
8×24	.....	.....	135	90	120	96	72
10×24	.....	.....	172	115	150	120	90

Power consumption. L. D. Moss (*Peele*) states that for level conveyors anthracite requires about 3 hp-hr. per ton-mile; bituminous coal, 3.5 to 4; and ashes, 4 to 6. Additional horsepower required for elevation may be obtained from the formula: Hp. = *tons per hr.* × *ft. lifted* ÷ 990. Add 10% for each gear speed reduction at the head sprocket to the total for horizontal transport plus elevation.

Applicability. Flight conveyors are rarely used in metal-concentrating mills on account of excessive wear but are frequently used in coal washeries, where the material handled is less abrasive than ores. They are sometimes very useful for transporting short distances in confined spaces where no elevation may be lost or even slight elevation must be gained. Table 26 gives data on several flight conveyors in mills of the NEW JERSEY ZINC CO.

Table 26. Flight conveyors in mills of New Jersey Zinc Co.

Ref. No.	Width, in.	Length, c-c., ft.	Rise, ft.	Speed, f.p.m.	Tons per hr.	Max. size feed, in.	Hp. consumed *b*	Moisture, %	Life, da.
1	36	82	1 1/4	132	101	0.1	20 *c*	1 1/2	3,200+
2	12	19	7 3/4	7	1	1 1/4	.....	10	.....
3	24	25	0	66	90	1 1/4	4	Dry	2,100
4	20	94	0	33	14	.....	3 *c*	Dry	.....
5	60	92	2 1/2	32	80	0.1	7 1/2 *c*	Dry	.....
6	39	92	2 1/2	32	15	0.1	7 1/2 *c*	Dry	.....
7	30	140	37 3/8	43	30	0.1	7 1/2	Dry	3,000
8	60	60	0	29	25	0.1	5	Dry	2,400
9	10	36	0	13	1	0.1	1/2	15	450
10	10	102	0	28	2	0.1	.....	15	450
11 *a*	10	101	0	25	2	0.03	1/2	15	450
12	10	96	0	13	1	0.03	1/2	15	450
13 *a*	10	101	0	25	2	0.03	1/2	15	450
14	10	98	0	36	3	0.1	3	15	450
15	10	98	0	36	6	0.1	3	15	450
16	10	95	0	18	4	0.1	1	15	450
17	24	60	0	18	6	0.1	.....	15	600
18	20	12	4 1/2	48	6	0.1	.....	Dry	600
19	24	65	0	30	10	0.1	1 1/2	15	600
20	18	30	7 1/4	41	10	0.1	1 1/2	15	600
21	48	9	1/4	47	1	0.1	.	25	200

a Two identical conveyors.
b Anti-friction bearings on 5 and 6; 9 to 20 incl. have plain bearings; others unspecified.
c Installed.

10. SCREW CONVEYOR

Screw conveyor is a continuous spiral flight encircling and fastened to a shaft lying within a horizontal or inclined trough; rotation of the flight pushes material forward. The shaft is supported on a bearing at each end and, if necessary to maintain alignment, may also be carried on hangers at one or more intermediate points; such bearings are variously equipped, as stated in Table 27. The shaft is rotated at one end by pulley and belt, sprocket and chain, or bevel gear; recommended maximum speeds are given in Table 28. Horizontal or slightly inclined troughs are commonly open on top, or covered by an easily removable lid; at slopes above, say, 30°, a pipe may be substituted for the trough. Clearance between flight and trough should be about equal to the average size of lumps in the feed when these lumps consist of material not readily broken during transit. The maximum permissible feed size (Table 29) depends upon the diameter of the flight, the percentages of coarse and fine sizes in the feed, and the resistance of lump material to crushing; if the feed is all coarse, permissible maximum size is smaller than if lumps constitute only 20 to 25% of the feed. Feed may be introduced through chute or spout at an end or other points; one advantageous arrangement, avoiding accidental flooding of the conveyor, is to equip the feed end of the shaft with a flight of smaller diameter and enclosed in a pipe issuing from the bottom of a hopper, this short flight thus acting as a feeder to the conveyor proper. The following data, and the accompanying tables, are from R. F. Bergmann (*41 CME 470*).

Capacity, cu. ft. per hr., for standard sizes and pitch and at different speeds is shown in Fig. 68; to convert to pounds, multiply by the factor W in Table 27; the comparatively wide range of weight in certain cases is due to differences in quality or moisture content. On inclined conveyors with standard pitch, capacity is diminished, owing to backslip, by the following percentages: at 10°, 15%; at 15°, 20%; at 20°, 40%.

Power for a horizontal conveyor may be computed by the formula: $\text{Hp.} = 1 + (ALN + CWLF) \cdot 10^{-6}$ in which A is related to diameter of flight and character of bearings, as in Table 30; L is length, ft.; N is speed, r.p.m.; C is cu. ft. per hr. (Fig. 68); W is lb. per cu. ft. (Table 27); and F is a factor Table 27) varying with character of the material. On a conveyor inclined upward at not over 20°, the additional power is approximately that theoretically corresponding to the vertical lift; direct calculation is inapplicable to steeper inclinations owing to the variations introduced by necessary modifications in design.

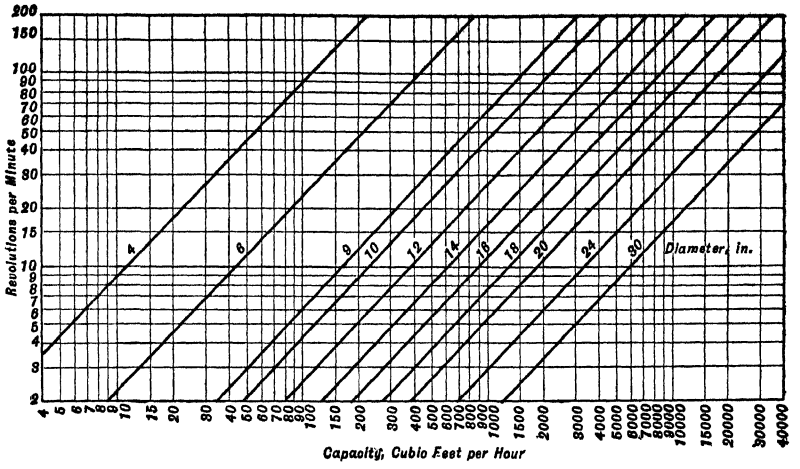

FIG. 68. Capacity of screw conveyors (*after Bergmann*).

Table 27. Factors affecting operation of screw conveyors (*After Bergmann*)

Material *c*	Lb. per cu. ft., *W a*	Class *b*	Bearings	Power factor, *F*
Bauxite, dry, crushed	75 to 85	IV	*Whl*	1.8
Cement, Portland	75 to 85	IV	*Whl*	1.4
Chalk, crushed	85 to 90	IV	*Whl*	1.9
Chalk, pulverized	70 to 75	IV	*Whl*	1.4
Clay, dry, ground	100 to 120	IV	*Whl*	2.0
Coal, fines or slack	40 to 45	II	*Ba*	0.9
Coal, pulverized	32 to 35	I	*Ba*	0.6
Coal, sized	45 to 50	III	*Ba*	1.0
Dolomite	75 to 90	IV	*Whl*	2.0
Feldspar, ground	65 to 70	IV	*Whl*	2.0
Fluorspar	110	IV	*Whl*	2.0
Fuller's earth, raw	35 to 40	IV	*Whl*	2.0
Graphite, flake	40	II	*Ba*	0.4
Gypsum, crushed	90 to 100	IV	*Whl*	1.6
Gypsum, calcined	55 to 60	III	*Whl*	1.2
Lime, quick-, ground	60	III	*Ba* or *Whl*	0.6
Lime, hydrated	35 to 45	II	*Ba* or *Whl*	0.8
Lime, pebble	56	IV	*Ba* or *Whl*	1.3
Limestone dust	75 to 85	IV	*Whl*	1.6
Limestone screenings	85 to 90	IV	*Whl*	2.0
Mica, flake	17 to 22	III	*Whl*	1.4
Phosphate, granular	90	IV	*Whl*	1.6
Salt, coarse	45 to 51	III	*Ba* or *Whl*	1.2
Salt, fine, dry	70 to 80	III	*Ba* or *Whl*	1.0
Sand, dry	90 to 110	IV	*Whl*	2.0
Shale, crushed	85 to 90	IV	*Whl*	2.0
Slate, crushed	80 to 90	IV	*Whl*	2.0
Soda ash, dense	55 to 65	III	*Whl*	0.7
Sulphur, lumpy	80 to 85	IV	*Ba*	0.8
Sulphur, powdered	50 to 60	IV	*Ba*	0.7
White lead	35 to 55	IV	*Whl*	1.0
Zinc ore, flot. conc	65 to 80	IV	*Whl*	1.7

a In loose condition, such as would occur in a conveyor.

b Class I: Light and free-flowing; 30 to 40 lb. per cu. ft. Class II: Medium weight, 40 to 50 lb. per cu. ft., nonabrasive, granular, and small lumps with fines. Class III: Non- or slightly abrasive, small lumps with fines, 40 to 75 lb. per cu. ft. Class IV: Granular, abrasive, mixed coarse and fine, 50 to 100 lb. per cu. ft.

c For many other materials, mainly artificial, see *41 CME 470*.

Ba = Babbitted or bronze bearings, grease-lubricated.

Whl = White iron, usually non-lubricated; sometimes hardened steel, or Stellited bushings.

Table 28. Maximum recommended speeds, r.p.m., for screw conveyors (*After Bergmann*)

Diam., in.	Class I	Class II	Class III	Class IV
4	175	120	95	.....
6	165	110	90	71
9	145	100	82	67
10	142	98	80	63
12	130	92	78	60
14	125	88	72	58
16	120	82	70	55
18	110	80	65	52
20	105	73	62	50
24	95	69	55	45
30	.....	.....	.....	40

Table 29. Maximum permissible size of lumps in screw-conveyor feed, inches (*After Bergmann*)

Screw diam., in.	All lumps	20 to 25% lumps
3	1/4	3/8
4	1/4	1/2
6	1/2	3/4
9	3/4	1 1/2
10	3/4	1 1/2
12	1	2
14	1 1/4	2 1/2
16	1 1/2	3
18	2	3
20	2	3 1/2
24	2 1/2	3 1/2

Table 30. Factor *A* in formula for screw-conveyor power

Screw diam., in.	Type of bearings		
	Lignum vitae, babbitt, or bronze	Self-lubricating, bronze	White iron or Stellite
3	15	24	36
4	21	33	51
6	33	54	78
9	54	96	132
10	66	114	162
12	96	171	246
14	135	255	345
16	186	336	480
18	240	414	585
20	285	510	705
24	390	690	945
30	549	975	1,320

Performances. For data on a few mill installations see Table 31.

Table 31. Data on screw conveyors in mills (*Q*)

	Gunnar Gold	New Jersey Zinc Company				St. Joe Lead Co., Edwards	
Screw diam., in.	.....	16	12	12	12	*a*	.....
Length, ft.	8	33	12	60	30	25 1/4	11.6
Rise, ft.	0	0	0	0	0	3.15	1.45
Tons per hr.	.....	9.8	5	6	10	52	.....
Power installed, hp.	3	5	.....	2	3	2 @ 10	15
Max. size mat'l, in.	2	0.1	0.05	0.09	0.09	*b*	*b*
Moisture, %	25	10	Dry	Dry	15	27	.....
Speed, r.p.m.	100	44	.....	21	41	59.4	59.4
Screw mat'l.	Ni-Cr *Cs*	Steel	.....	.....	.....	.....	.....
Life, days	45	600	3,000	.....	600	.....	.....

a Two parallel screws. *b* Rod-mill product, 18% >48-m. *Cs* = Cast steel.

11. MISCELLANEOUS CONVEYORS

Johns conveyor (*138 #1 J 47*) transports wet or dry material in a continuous stream and in any direction, including the vertical, without transfer at points where direction changes. It consists of two parallel molded-rubber endless belts, semicircular in cross-section, normally facing each other and locked by tongue-and-groove joints along their edges, thus forming in effect an endless rubber pipe. At loading and discharging points, the two halves are unlocked and spread apart by passing over suitably designed rollers; other rollers restore the belts to their normal position. One of the halves carries inwardly projecting disks at short intervals, of such diameter as to form a succession of tightly closed

pockets when the two halves are interlocked. A steel chain is imbedded in a rubber fin along the outside back of each half; driving and guide rollers are so adjusted as to impart a twist to the intervening spans, whence the increased tension on the chains maintains tight contact between the two halves. Manufacturer's data on capacity are as in Table 32. Tonnages for other speeds and unit weights are in direct proportion.

Table 32. Capacity of Johns conveyor (*After manufacturer*)

Inside diam., in.	Tons per hour *a*
2	3
4	12
6	27
8	48
12	108

a At 100 f.p.m.; material, 50 lb. per cu. ft. Tonnages for other speeds and weights in direct proportion.

Rotary tubular conveyor in the MT. LYELL mill transfers ball-mill product to a classifier at the rate of 169 tons of solid per hr., in a pulp containing 19.5% water (*PC*). The conveyor is a horizontal tube, 41 ft. long, 21 in. diam., having a double-lipped scoop at the feed end which revolves on a circle of 7-ft. diam. The tube is rotated at 29 r.p.m. by a 15-hp. motor delivering its full load. The interior of the tube has no spirals (flow being maintained by the hydrostatic head developed by the scoop) but was once provided with 3×3-in. angles, riveted longitudinally, merely to reduce wear on the shell. More recently, the tube has been lined with rubber, the life of which greatly exceeds the 18- to 24-mo. life of the earlier tubes.

Fuller-Kinyon pump transports fine, dry materials such as cement or cement ingredients, hydrated lime, fluedust, etc., through pipe lines; when just sufficiently aerated, such materials flow almost like liquids. If uniformly sized, the limiting coarseness is about 40% >200-m. (or all <48-m.), but grains as large as 20-m. can be pumped if accompanied by about 50% of <48-m. Maximum permissible moisture content depends upon the nature of the material; a granular sulphide concentrate, for example, must be practically bone-dry, whereas some materials retain their fluffiness with up to 2 or 3% free moisture. Fig. 69 shows essential features of the H-type pump. Material enters the hopper *1*, preferably through a closed chute provided with rotary feeder. It is then pushed forward by the screw *2*, on which the pitch diminishes toward the end, thus compacting the material by pressing it against the flap-valve *3*, of which the amount of opening is controlled by the counterweight *4* outside of the pump; this compacting seals the pump against back-pressure. Air at a pressure of 10 to 30 lb. per sq. in. is distributed through the manifold *5* to the jets *6*, of which the size (rarely over 1/4 in.) and number are adapted to the particular conditions. The conveying pipe is standard wrought-iron with screwed flanges, the faces of which (and the abutting ends of the pipes) are machined so that, with accurately sized gaskets, a joint will offer the least possible friction.

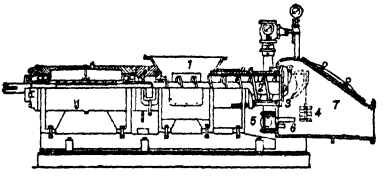

FIG. 69. Fuller-Kinyon pump, Type H.

Material thus aerated is propelled by the combined forces supplied by the screw and by the expansion of air in the chamber 7; its travel does not depend upon the velocity of a carrying current of air. In one case, cement was loaded on a ship about 4,000 ft. from the pump; in another, cement was elevated 302 ft. through a 730-ft. pipe. Table 33 gives data on a few typical installations. A mobile pump is also available, designed for unloading similar materials from box-cars, flat-bottom bins, etc., both air and delivery pipes being flexibly connected. The two rubber-tired wheels are independently motor-

Table 33. Performances of Fuller-Kinyon type H pumps (*Fuller Co.*)

Material	Portland cement	Portland cement	Pulv. limestone (cement raw material)	Hydrated lime	Pulv. coal
Weight (lb. per cu. ft.)	94	94	67	35	35
Size, % <200-m	95	92	90	.....	86
Moisture, %	0	0	5	.....	3.0
Tons per hr	30	87	43	18	35
Pump size, in	6	8	8	6	8
Diam. transport line, in	5	8	6	5	6
Length transport line, ft	850	900	322	900	600
Vertical lift, ft. (included in length)	100	110	60	60	50
Vol. free air, cu. ft. per min	480	1,590	343	330	484
Air pressure (gage), lb. per sq. in.	22	26	14	18	18
Power consumed, hp.: Pump	48	122	23	26	39
Compressor	44	154	23	28	40

driven, whence the movement of the pump can be controlled by an automatic switch in the hands of the operator at any distance within eye-shot.

12. BUCKET ELEVATOR

A bucket elevator (Fig. 70) consists of a number of buckets *d* fastened to an endless chain or belt *a* running respectively on two sprockets or pulleys *b*, *c* at different elevations. Material is fed at *e* directly into the buckets or is scooped up from the BOOT *f* and carried up and discharged into a receiving hopper *g* as the buckets pass over the upper (HEAD) wheel. The line joining the centers of the pulleys or sprockets may be inclined at any angle between 65 or 70° and the vertical. Bucket elevators are called CONTINUOUS if the buckets are spaced practically touching and CENTRIFUGAL-DISCHARGE if the buckets are spaced, say, one or more bucket-depths apart. The height of lift in concentrating mills is seldom over 75 ft. but there is no definite limit in the ordinary range of requirements.

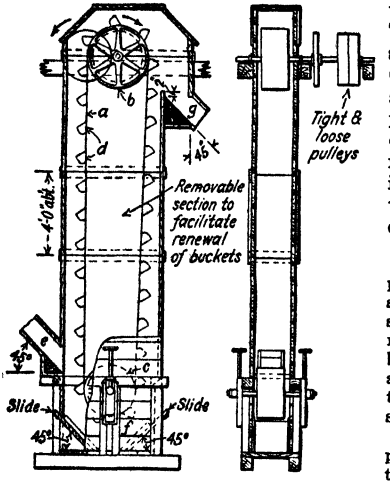

FIG. 70. Belt-bucket elevator.

Drive is usually by a spur gear on the head shaft and pinion on a jack shaft belt-driven from a motor or line shaft. Direct belt drive from a line shaft to the head shaft is sometimes used; also direct connection of a motor to the pinion shaft. Gear drive is better than belt drive because it permits higher drive-belt speed, and belt drive is better than direct connection because the belt will slip in case of a sudden jam and possibly save breakage of the bucket line.

Head shaft should be extra heavy and as short as possible. The greatest stress is due to the weight of the loaded bucket line and to sudden shocks arising from obstruction to the free motion of the line; a shaft strong enough to support this loading is more than large enough to transmit the necessary power and to come within safe limits for bearing pressures. A light shaft that bends under load causes uneven and excessive wear on bearings.

Size of head shaft. Let w = total load in lb. of shaft, pulley, bucket line, and ore; l = length in inches of the shaft between bearings; d = diameter of shaft in inches; z = section modulus = $\pi d^3/32$; s = permissible working stress in lb. per sq. in. = say, 5,000 lb. Then $wl/4 = sz = 5{,}000\ \pi d^3/32$ and $d^3 = wl/1963.5$.

Bearings may be of standard pattern but preferably ball-and-socket, grease-lubricated. Special COLLARS with an interlocking rim to cover the end of the bearing are sometimes used to exclude grit; closed ends aid exclusion. Shafting is frequently turned down on the ends to permit the use of smaller-sized bearings.

Rubber belt is the usual medium for carrying buckets in American concentrating-mill practice; BALATA BELTS have been used widely in South Africa. Rubber elevator belts are usually made with 32-oz. duck; for heavy work, 36- or 42-oz.; with a $^1/_{32}$- to $^1/_8$-in. rubber cover on the pulley side for protection against pulley slip and some cover on the bucket side also, to provide for the wear of entering feed; for wet materials the cover on the pulley side is usually twice as thick as on the bucket side and ranges up to $^1/_8$-in. The edges usually have extra heavy covering. The belt should be 2 to 4 in. wider than the bucket to prevent the buckets from catching on the housing or any other projection. Elevator belts are subject to heavy loads; surface wear is severe both on account of loading conditions and slip and creep at the head pulley; the perforations for bolts allow access of grit and water, and this in conjunction with acute bending around small boot pulleys, and frequent bending due to short length disintegrates the internal bond (FRICTION). (CREEP is change in belt length, due to difference in tension on the two sides of the head pulley, so that the belt shrinks in passing from the up side to the down side and this causes relative movement between the surface of the pulley and the belt.)

Belt replacement is the most important item of upkeep in elevator operation so that precautions to extend belt life pay for themselves in short periods. On elevators with buckets spaced some distance apart and run at low speeds, triangular strips of wood are sometimes fastened to the belt between buckets to prevent material from running along the belt and getting caught behind the buckets; this practice is reported to have greatly increased the life of belts (*59 A 225*). When deterioration occurs chiefly on the outside of a belt, owing to excessively abrasive nature of the material, the life of the belt can often be extended by shifting all buckets into the previously open spaces between them; buckets on tailing ele-

Table 34. Vertical belt-bucket elevators at Flat River, Mo. (*IC* 6658)

Lift, c-c., ft.	42 1/2	52 3/4	57 3/4	58 1/2	24
Belt: Width, in.	28	28	20	16	16
Total length, ft.	95	116	125	125	56
Plies	9	9	8	8	7
Duck, oz.	36	36	36	34	34
Cover: Bucket side, in.	3/16	3/16	1/8	1/8	1/16
Pulley side, in.	1/8	1/8	1/8	1/8	1/8
Speed, ft. per min.	344 to 410	415 to 450	340 to 352	269	460
Buckets: Number	67	81	83	62	37
Length × width × depth, in.	24×8×8 1/2	24×8×8 1/2	18×8×8 1/2	14×8×7 1/2	14×8×7 1/2
Spaced, in.	17	17	18	24	18
Head pulley: Diam. × face, in.	48×30	48×30	42×22	36×18	36×18
Shaft diam., in.	4 15/16	4 15/16	4 15/16 *a*	3 7/16	3 7/16
Boot pulley, diam. × face, in.	30×30	30×30	30×22	24×18	24×18
Motor, installed hp.	50	50	20 *b*	50 *c*	5
Drive	*B, sg*	*B, sg*	*B, sg*	*B, sg*	*D, r*
Feed: Tons per hr.	112	322	111	3.5	8.5
Size	<2-in. 80% +1/2-in.	<1-in. 84% +8-m.	<4-m.	<4-m.	*d*
Moisture, %	2 3/4 to 3	2 3/4 to 3	35.9	2 3/4 to 3	30.8

a Reduced to 4 7/16 in. through the bearings.
b Also drives 2 Leahy screens.
c Also drives an inclined belt conveyor.
d Thickened (galena) flotation concentrates, 96% <200-m. *B, sg* = belt and spur gear; *D, r* = direct, with speed reducer.

vators in the Tri-State field have been thus shifted as many as three times before the belt was discarded.

A mill of the St. Joseph Lead Co. at Flat River, Mo., contains 14 vertical bucket elevators, both wet and dry, with combined length of 1,585 ft. of rubber belt; all buckets are of malleable iron, AA type, with reinforced front edge and corners, those on the dry elevators being further protected by a welded deposit of hard metal (*IC 6658*). Life of a wet bucket is about 11 mo.; that of belts, wet or dry, is 3 yr. or more. On the 20- and 28-in. belts, buckets are attached by 2 rows of 3/8-in. bolts, with a cross-strip of belting to hold the bottoms away from the belt; on 16-in. belts, by a single row of bolts. All belts are covered with heavy burlap (cider cloth). Boot pulleys are solid, with shafts running in wooden or oil-packed steel bearings. Table 34 gives additional data on these elevators, and Table 35 includes several other installations in American concentrators.

Splicing belts. Various methods are shown in Fig. 71. The Jackson fastener (*d*) consists of stamped steel plates each with two countersunk bolts, two oval cup washers with prongs, and two sleeve nuts. The bolts with cup washers are inserted into holes in the belt from the pulley side, the steel plate put on, and the sleeve nut tightened. The cup washers cause the belt to be drawn up into the concave parts of the steel plate and the sleeve nuts wedge the warp threads of the duck together and a tight joint is made. Butt-strap joint (*a*) is usually twice as long as the width of the belt or, with continuous buckets, the length of two buckets on each side of the joint. The lap-joint (*c*) is simple and easily made. With butt-strap and lap-joints on heavy belts (over 6-ply) the extra thickness caused by the double layer of belt at the joint causes movement between the belts when passing over the pulleys and tends to loosen the bolts and allow sand to enter between the layers. When a lap-joint is used the direction of motion of the belt should be as indicated by the arrow to prevent turning over the end when slipping occurs at the head pulley.

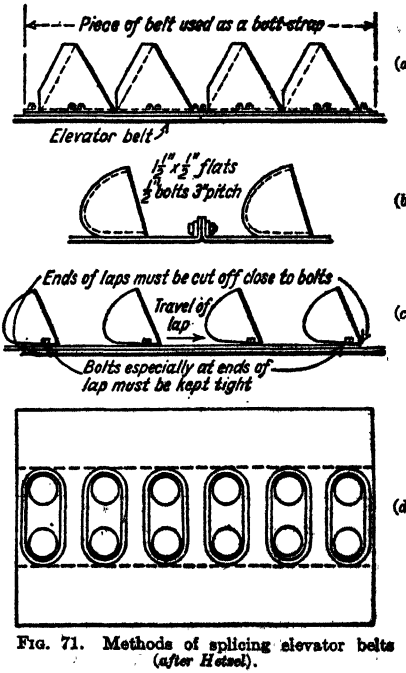

Fig. 71. Methods of splicing elevator belts (*after Hetsel*).

Table 35. Performances of belt-bucket elevators (*Q*)

Plant	Max. size mat'l	Moisture, %	Lift, ft.	Pulley diam., in.	Speed, ft. per min.	Belt (all of rubber)				Buckets				Tons solid per 24 hr.	Power cons., hp.	Theoret. hp. for lift *w*
						Width, in.	Plies	Cover, in.	Life	Material	L.×w.×d., in.	Spaced, in.	Life			
Bunker Hill & Sullivan	15-mm.	50	53 1/2	42	480	16	8	1/8	1,200 da.	Mal.	8×8 1/2×16	16	120 da.	850	.....	.....
	Froth	52	23	24	390	12	4	1/16	600 da.	Ss *a*	6×6 1/2×12	16	300 da.	200	5 *i*	0.40
Britannia	1-in.	60	35	60	.....	36	9	.....	3 yr.	Ss	10×7×7	9	5 mo.	2,500	18	9.19
Anaconda Copper Co., Conda, Id.	1/2-in.	5 1/2	71 1/2	36	420	10	8	1/4	6 yr.	Ss	10×6×5	15	.....	65	4	0.21
Nevada Consol., Chino	1 1/2-in.	6	72	60	540	38	12	3/16 *p*; 1/8 *b*	584 da.	Mal.	18 1/2×10×8 *d*	22	.....	5,000	80	16.14
	4-m.	50	36	38	420	20	8	3/16 *p*; 1/8 *b*	570 da.	Mal.	18 1/2×10×8	17	.....	900	12	2.73
Nevada Consol., Ray	1-in.	25	50	60	396	30	12	1/8	2 to 3 yr.	Mal.	15×9×9	19 *c*	600 da.	3,000	25	8.43
	8-m.	25	27	40	369	16	10	1/8	2 yr.	Mal.	16×8×8	18	Indef.	1,700	10	2.56
	1-in.	3.8	54 1/2	60	427	36	12	1/8	700 da.	Mn-Ss	18×9×7	12 *c*	Indef.	5,000	25 to 30	11.94
Internat. Sm. & Ref. Co., Tooele	65-m.	82	33	42 1/2	445	12	6	3/32	.....	Ss	12×7×7 1/4	13	.....	60 to 80 *e*	5±	.....
Mountain City	Flot. mid.	80	40.8	42	360	14	6	1/16 *p*; 3/32 *b*	.....	*f*	12×6 1/2×7	24	.....	100	7 1/2 *i*	0.87
	Flot. conc.	15	46	42	360	14	6	1/16 *p*; 3/32 *b*	.....	*f*	12×6 1/2×7	24	.....	150	7 1/2 *i*	0.34
Andes Copper Co.	Flot. conc.	22	44 1/2	42	465	12	8	3/32	270 da.	Ss	10×6×4 3/4	24	150 da.	<400	.....	.....
Utah Copper Co., Arthur	3/8-in.	64.4	47	54	420	30	12	1/8 *p*; 5/32 *b*	650 da.	Mal.	15×9×9	18 *c*	150 da.	10,000	60	54.21
	1/8-in.	40	51	66	432	36	12	do.	1,000 da.	Mal.	18×9×9	18 *c*	700 da.	6,500	70	23.23
	48-m.	43	56	54	387	18	12	do.	1,000 da.	Mal.	18×9×9	18	700 da.	1,000	15	4.12
Magna	1-in.	5	55.3	60	435	36	12	1/8 *p*; 5/32 *b*	583 da.	Mal.	18×9×9	18	150 da.	10,000	60	24.50
	10-m.	40	60.5	66	487	36	12	do.	1,000 da.	Mal.	18×9×9	18	150 da.	6,500	50	27.56
	Flot. conc.	85	35.3	66	467	24	8	do.	1,000 da.	Mal.	24×9×9	24	150 da.	1,000	25 *i*	9.91
	Flot. conc.	85	39.3	54	387	18	10	do.	1,000 da.	Mal.	18×9×9	24	150 da.	1,000	25 *i*	11.03
N. J. Zinc Co., Franklin	0.1-in.	5	75	48	475	30	8	3/32	830 da.	Ss	14×7×7	16	850 da.	1,465	30	4.85
Ogdensburg	1 1/4-in.	Dry	54.8	34	312	16	7 *g*	3/16	500 da.	Ss	14×7×7 1/4	16	250 da.	5,450	.....	.....
	1/2-in.	Dry	39.3	30	300	14	7 *g*	3/16	600 da.	Ss	12×7×7 1/4	16	300 da.	4,320	.....	.....
	0.09-in.	10	68	28	290	16	7 *h*	1/16 *p*; 1/8 *b*	900 da.	Ss	12×7×7 1/4	18	450 da.	2,400	10 *i*	7.62
	0.09-in.	Dry	74.3	30	325	12	7 *g*	3/16	1,500 da.	Ss	10×6×6 1/4	14	750 da.	3,360	.....	.....
	0.09-in.	Dry	60.5	30	327	8	7 *h*	1/16 *p*; 1/8 *b*	2,100 da.	Ss	8×5×5	12	1,050 da.	2,300	.....	.....
	0.09-in.	Dry	55.6	24	251	8	7 *h*	1/16 *p*; 1/8 *b*	900 da.	Ss	6×4×4	12	450 da.	720	5 *i*	1.68

a Bottom pierced with 5/16-in. holes.
b On bucket side of belt.
c Staggered.
d Double row.
e Intermittent service.
f Copper-steel 3/16-in. plate.
g Of 32-oz. duck.
h Of 28-oz. duck.
i Installed power.
p On pulley side of belt.
w On basis of wet weight.
Mal. = Malleable iron.
Ss = Sheet steel.

Head pulley should be large enough to prevent undue internal strain between the plies of the belt; a diameter in inches at least four, better five, times the number of plies in the belt is satisfactory. The diameter is also limited by the belt speed and discharge requirements. WIDTH OF FACE should be 2 to 4 in. greater than the width of the belt. The pulley face is usually crowned, but high crowns must be avoided unless the buckets are placed in two rows. A solid cast pulley with split hub and one or two keys and set screws is best; as a further precaution against loosening, a heavy band may be shrunk around the split hub or a keyed, solid-hub pulley pressed onto the shaft. Head pulleys are generally made extra heavy with two rows of arms on wide-face pulleys and long hubs extending almost the entire width of face.

Lagging increases traction between the pulley and belt and decreases wear on both. The most satisfactory lagging is 3- or 4-ply rubber belt or 2- or 3-ply belt with a 1/16- or 1/8-in. rubber cover, fastened by 1/4-in. flat-head bolts; the bolt holes in the rim should be countersunk outside so that the heads of the bolts are drawn down below the outer edge of the lagging, and thus prevented from wearing the belt.

Chains or link-belts running on sprocket wheels are commonly used for elevating broken stone. They have the great advantage of positive drive, and are applicable to hot materials that might damage rubber belts. Their chief disadvantage is the great wear at the articulations, where lubrication is difficult or impossible; notwithstanding the use of special wear-resisting alloy steels, chain is unsatisfactory for wet pulps or dusty abrasive material.

The standard detachable chain, Fig. 72, *A*, is cheapest and is widely used; the links are easily replaced but no provision is made for lubrication or exclusion of grit; it can be obtained in alloy steel. Fig. 72, *B*,

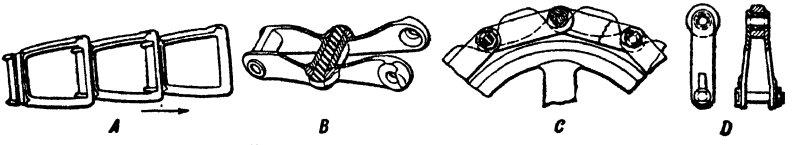

FIG. 72. Chain links for elevators.

shows interlocking riveted pintle chain, usually made of malleable iron; most of the strain comes on the links rather than the pins, and grit is excluded to some extent. Ley bushed chains (Fig. 72, *C*) have malleable-iron links with case-hardened steel pins and bushings which are easily replaced. Special links (Fig. 73) carry the buckets.

An elevator may have one or two chains. Single chains are attached to the back of the buckets; double chains may be attached either to the back or sides. With elevators inclined at any considerable angles from the vertical, the chains are usually placed on the sides of the buckets and provided with



FIG. 73. Links with attachments for holding buckets.

rollers which run on a track, thus supporting the loaded side. Fig. 72, *D*, shows link for malleable-iron roller chain. For details of the numerous types of chains and link-belt see catalogues of Stephens-Adamson Co., Link-Belt Co., Jeffrey Mfg. Co, C. O. Bartlett & Snow, and others.

Housings. No housing is needed with coarse and nearly dry material except to guard against possible spill of material on men or machines near the elevator. If wet pulps or fine dusty materials are being elevated, a housing should be provided to confine splash or dust. Wood or steel is commonly used; concrete less frequently. The front of the housing (upcoming side) is made in removable sections, and doors are provided to allow access to the boot.

The simplest WOOD HOUSING consists of 1- or 1 1/2-in. matched boards nailed vertically to the inside of an outer framework. Fig. 74 shows details of a wooden elevator housing made up of two layers of matched boards; the outside layer is placed horizontally and nailed to the framework and the inside layer is nailed vertically to the outside layer. Building paper painted both sides with asphalt paint laid in wet between the two layers of boards prevents leakage. CLEARANCE between the belt and buckets and the housing should be not less than 4 1/2 in. on the sides, better 6 to 8 in., and from 8 to 12 in. or more front and back. Boards running parallel to the belt are sometimes nailed on the inside of the housing to take any wear if the belt runs out of line. The joints on such boards should run in the direction of travel of the belt. The housing is usually light and is supported when possible on the floors of the mill building. SUPPORT FOR HEAD-PULLEY shaft and bearings is provided by special girders in the building frame. STEEL HOUSINGS are made in sections of light sheet steel with light angles riveted to the edges; sections are bolted together through the angles. REMOVABLE SECTIONS should be conveniently placed to allow access for observation and repair. A crane rail should be provided above the head pulley.

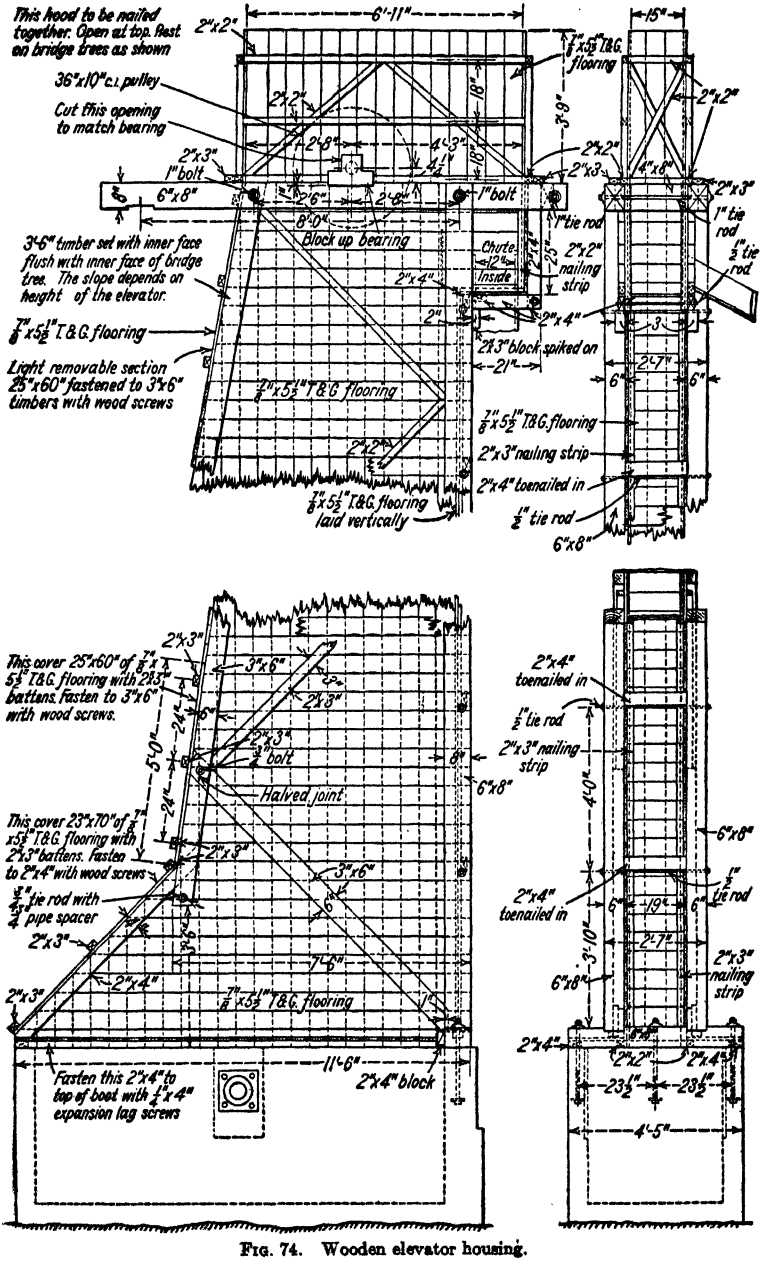

FIG. 74. Wooden elevator housing.

Boots for elevators may be small or large. Small boots are used for elevators lifting coarse material so that, if there is any spill, the material will be readily moved by the buckets.

Boots of cast iron or steel can be obtained from makers (Fig. 75). The bottoms are smooth and rounded to permit easy sliding of accumulated material in front of the buckets; removable liners are usually provided. Bearings for the boot-pulley shaft are sometimes supported on the boot with a take-up as shown in Fig. 75. CLEARANCE between the bucket tips and the bottom of the boot should be

sufficient at the lowest position of the boot pulley to prevent the buckets from jamming against accumulated material; at least 3 times the diameter of the largest pieces handled should be allowed. For fine wet pulps the boots should be large to reduce wear on the sides and bottom. Such material is frequently fed directly to the boot and is scooped up by the buckets. The boot then may be either a concrete sump or a large wooden box 2 or 3 times the width of the housing and of greater length (see Fig. 74).

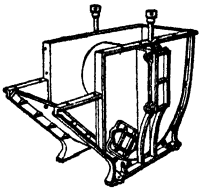

FIG. 75. Cast-iron elevator boot.

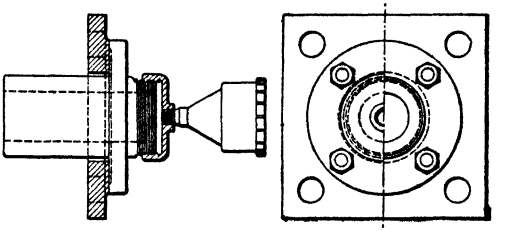

FIG. 76. Special bearing for boot-pulley shaft.

Boot pulley is usually smaller than the head pulley, ranging from 6 in. less to two-thirds the diameter of the head pulley, but never less than 24 in. diameter. BOOT PULLEY SHAFT is usually lighter than the head shaft. BEARINGS are supported on the boot or, better, independently outside. Proper lubrication of boot bearings is difficult and is usually neglected. Fig. 76 shows a bearing with flanges for bolting to the boot walls. Grease from cup at end moves in opposite direction from any entering grit and tends to keep the bearing clean. TAKE-UPS are necessary on vertical elevators to compensate for belt stretching. The usual form is supported on the boot and consists of a screw moving the bearing in guides. Special weighted automatic take-ups can be procured. The amount of take-up is necessarily small and when the limit is reached the belt must be shortened. Take-ups can be omitted from inclined elevators; if the boot pulley shaft is placed behind the head pulley a horizontal distance equal to the diameter of the head pulley, the sag of the loaded belt is sufficient to allow as much stretch without loss of wrap on the boot pulley as would be provided by a take-up. With inclined elevators extra tension is put in the belt, if the hang of the loose side is within the line of the catenary between the head and boot pulleys.

Head housing. A removable housing should be provided around the head pulley, extending a distance above the head shaft equal at least to the diameter of the head pulley. It should make a tight joint with the receiving hopper and be provided with a light, easily removable cover.

Receiving hopper is provided with a receiving iron to catch material as it discharges from the buckets. The receiving iron is placed as close to the buckets as possible (rarely more than 1 in. away from the edges of the buckets) and at a point low enough so that all material will be discharged from any bucket before it passes the lip of the iron. The best position to avoid too great a loss of lift varies from a few inches below the center of the head shaft for high-speed centrifugal-discharge elevators carrying a freely flowing material to a point below a 45° line drawn tangent to the circumference of the head pulley for slow-speed elevators or those carrying sluggish material. The receiving hopper is usually made with rectangular bottom, and material is allowed to bank up to its own angle of repose, thus avoiding the use of liners. If discharging material strikes the sides of the hopper, liners are provided. The receiving iron in inclined elevators may be placed closer under the head pulley than in vertical, but the housing will be somewhat more complicated, greater floor space required, and if the inclination is great, rollers must be provided to support the loaded belt. Material discharges from the hopper through a chute or launder let into the side or end a few inches above the bottom.

13. CONTINUOUS-BUCKET ELEVATOR

This type is used for elevating coarse and comparatively dry material. It is usually run at low speeds so that the discharge takes place by dumping of the buckets as they pass over the head pulley, with little aid from centrifugal force. As a bucket dumps, its load slides over the bottom of the preceding bucket and is caught in the discharge chute. Speed should not be so great as to cause excessive spill at the feed chute, and with material containing a large percentage of freely running fine material it should be fast enough to give sufficient throw as the buckets pass over the head pulley to prevent the fine sand from running out the sides of the buckets and falling back into the boot. With continuous chain-bucket elevators the speed is seldom greater than 100 f.p.m.; continuous belt-bucket elevators run at higher speeds; Table 36 gives proper speeds for various head-pulley diameters.

Table 36. Speeds for continuous-bucket elevators (*After Hetzel*)

Head pulley		Belt speed, feet per minute
Diameter, inches	Revolutions per minute	
12	35	110
15	31	124
18	28	132
21	27	147
24	25	157
27	24	175
30	23	180
33	22	190
36	21	198

Buckets for continuous-bucket elevators are shown in Fig. 77, and their dimensions, capacities, and weights in Table 37. They are usually made of steel plates riveted together (*a*, *b*), with or without ears for lapping adjacent buckets. The transverse section depends upon the material carried and the slope of the elevator.

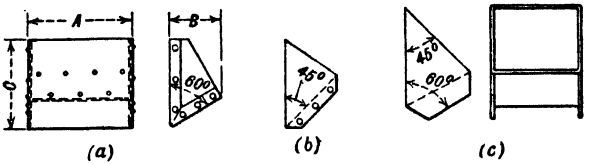

FIG. 77. Buckets for continuous-bucket elevators.

Table 37. Dimensions and weights of standard steel ore-buckets for continuous-belt elevators (Fig. 77) (*Stephens-Adamson M'f'g Co.*)

Dimensions				Weight per 100, pounds				
Length, *A* inches	Width, *B* inches	Depth, *C* inches	Capacity, cubic inches	No. 16 steel	No. 14 steel	No. 12 steel	No. 10 steel	No. 8 steel
5	3	4	20	125	150	220	.....	.....
6	3 1/2	5	35	160	200	280	.....	.....
7	4	6	56	170	220	320	.....	.....
8	4 1/2	7	84	290	360	520	650	.....
9	5	8	120	320	400	690	730	.....
10	5 1/2	9	165	390	490	720	890	.....
11	5 1/2	9 1/2	190	530	660	960	1,190	1,460
12	6	10	240	550	690	1,020	1,250	1,530
13	6 1/2	11	314	650	810	1,190	1,470	1,830
14	7	12	392	.....	950	1,380	1,700	2,090
15	7 1/2	12	450	.....	1,040	1,500	1,870	2,280
16	8	13	555	.....	1,180	1,700	2,100	2,600
17	8	13	589	.....	1,220	1,780	2,130	2,700
18	9	14	756	.....	1,430	2,080	2,580	3,160
20	9	14	840	.....	1,550	2,240	2,780	3,400
22	10	14	1,016	.....	1,725	2,500	3,100	3,790
24	10	15	1,200	.....	2,000	2,930	3,540	4,450

In Fig. 78, *AOB* represents a bucket in the position it occupies when the next following bucket is starting to dump. Angle *XOB* should be 40 to 50° so that material dumped from the following bucket onto *OB* will slide freely; angle *BOA* should be at least 50 to 60° to prevent lumps of rock from wedging and to minimize sticking of damp fine material. $BOA = 90 - XOB + YOA$. Setting $XOB = 50°$ and BOA at 60°, YOA, the inclination of the down-going belt, is 20°. The carrying capacity for any given inclination of elevator and length of bucket front depends upon angle *BOA;* for elevator slopes of 10° to 30° from the vertical, buckets with angle *BOA* between 60° and 70° have maximum carrying capacity.

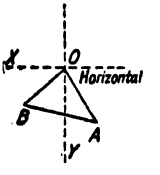

FIG. 78.

Fastening buckets to belts is done by means of bolts. Other methods have been proposed but have not worked out satisfactorily. One or two rows of bolts may be used, the latter for all but very small buckets; two rows are spaced 1 to 2 in., and pulley should be at least 30-in. diameter, if two rows are used. Buckets work loose readily, and an elevator should be inspected at short intervals so that buckets may be tightened before they fall into the boot and tear off others. Double rows of narrow buckets set staggered on a wide belt are better than wide buckets because they allow the belt to conform to the crowned head pulley without undue strain on belts and bucket bolts. The gap between bucket and belt in passing over a pulley depends upon the length of the back of the bucket, the place of attachment, and the diameter of the pulley. If the buckets are bolted along the upper edge of the back, the gap at the bottom is

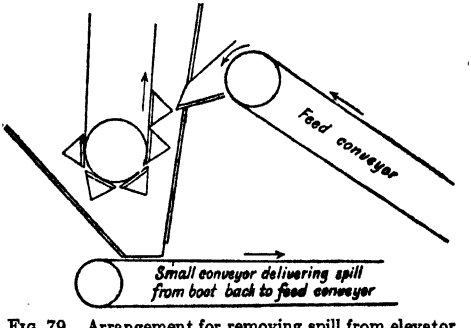

FIG. 79. Arrangement for removing spill from elevator boot.

large, and in passing over the head pulley material will be spilled into the gap unless extraordinary precautions are taken; if bolted near the bottom, the large gap picks up material in passing through the boot, and the buckets will probably be torn away. Center bolting is the compromise adopted. The gap $= g = \frac{(\sqrt{d^2 + l^2}) - d}{2}$, where d = diameter of head pulley and l = length of back of bucket; g should never exceed $l/8$.

Feed. A continuous-bucket elevator should be fed through a chute delivering to the rising side at a point such that the bottom of the feed chute is two bucket spaces above the foot shaft. This gives a chance to catch spill in a later bucket. CLEARANCE between the feed chute and the outer edge of the bucket should be great enough to prevent a large piece of material from jamming.

Spill that falls into the boot must be dug out by the buckets, with consequent increase in wear and power consumption. Small accumulations in large boots may be removed manually through doors; Fig. 79 shows an ingenious method of removing large amounts mechanically. (H. M. Roche, BEACH GLEN MINE, Dover, N. J. *PC.*)

Inclination is usually 10° to 30° from the vertical; this increases the chance of catching spill in succeeding buckets and also aids sliding discharge.

14. CENTRIFUGAL-DISCHARGE ELEVATOR

These elevators employ centrifugal force developed in passage over the head pulley to throw material clear of the buckets into the receiving hopper. As rising buckets reach the head pulley, centrifugal force becomes effective and tends to push the bucket contents toward the lip. The force acting on the bucket loads is the resultant of gravity and this centrifugal force. Centrifugal force, $C = 2Wv^2/gD$ where v = peripheral velocity in ft. per sec., D = diameter in ft. of the circle described by the center of gravity of the load, W = weight of the bucket load in lb., and g = acceleration due to gravity (32.2 ft. per sec. per sec.). Material should start to discharge from the bucket when the direction of the resultant of the forces becomes perpendicular to the front of the bucket; actually discharge begins somewhat later, the amount of lag varying with the fluidity of the load. Free-flowing material discharges close to the theoretical point; sluggish and sticky materials lag considerably.

Critical speed is that for which the centrifugal force is equal in magnitude and opposite in direction to gravity. At this speed the load is in equilibrium with respect to the bucket (see Fig. 80) and $C = W = 2Wv^2/gD$; $v^2 = gD/2$; $v = 4\sqrt{D}$ (approx.). To find the r.p.m. (N) for this condition: $v = \pi DN/60$; $\pi^2D^2N^2/3{,}600 = gD/2$; $N^2 = 1{,}800g/\pi^2D$, and $N = 76.6/\sqrt{D}$. d (diam. of head pulley) $= D - 2t - p$, where t = thickness of belt in feet and p = projection of the bucket in ft.

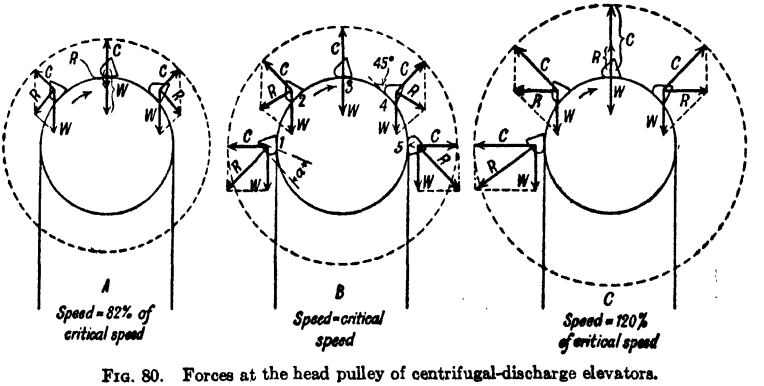

FIG. 80. Forces at the head pulley of centrifugal-discharge elevators.

As a bucket starts onto the head pulley the sudden application of centrigual force may, if the bucket is full of freely flowing pulp, cause some spill as the load shifts to bring its surface perpendicular to the resultant force. As the bucket passes around the head pulley the resultant force decreases but it always has a component pointing toward the bottom of the bucket until the bucket is vertically above the pulley center. In Fig. 80, *B*, the buckets have a 45° bottom angle, and the resultant force at position (1) is perpendicular

to the front of the bucket. The amount of material that the bucket will hold under this condition depends on the internal friction or fluidity of the mass; the load tends to take a position so that the angle a between the side of the bucket and the top surface of the load equals the angle of repose (Table 2); with mobile pulps the carrying capacity of the bucket is distinctly limited, but with sticky or coarse dry material and buckets not too heavily loaded, practically no spill will occur, because the initial condition is instantaneous and is followed by more favorable conditions.

Free discharge occurs on the discharge side of the pulley when the direction of the resultant is within the parallels to the front and back drawn through the center of gravity of the load; in such cases there is no friction between the load and walls of the bucket. For the 45° buckets shown in Fig. 80, free discharge at critical speed extends over the full quadrant from the top to the point at which the belt leaves the pulley. For a bucket with bottom angle of 30°, free discharge extends only to a point 60° from the vertical; a bucket with 15° bottom angle will discharge freely only to a point 30° beyond the vertical. The bucket may still discharge beyond the point at which free discharge ends but discharge will be retarded by friction due to the component of the resultant perpendicular to the front of the bucket. Thus while a bucket with a small bottom angle has the greater carrying capacity, its period of free discharge is so limited that net capacity is ordinarily less than that of buckets with more flare.

Belt speeds below the critical speed (Fig. 80, *A*). The bottom angle is unimportant except that material packs and holds back more with small angles. Under the conditions pictured in *A*, while the bucket is moving from the top position to a point about 45° beyond, the resultant lies inside the tangent to the circle of rotation of the center of gravity of the load and the load tends to run out onto the belt; free discharge occurs between 45° and 90° beyond the vertical.

Overspeeds. Fig. 80, *C*, shows the effect of overspeed; 20% is probably the limit for efficient work. With 45° bottom angle, the resultant on the rising quadrant is always in a direction tending to push the load out; it reaches a minimum at a point 45° up from the horizontal. With a bottom angle between 35° and 40° the tendency to discharge is delayed until the bucket reaches 15° to 25° from the vertical. On the discharge side the resultant favors discharge over the whole quadrant; with a 45° bottom angle free discharge takes place after the bucket passes the 45° point; with smaller bottom angles free discharge starts later and *vice versa*.

The usual bottom angle for buckets handling ores or mill pulps is about 40°; this gives good capacity with a good range of free or nearly free discharge. Overspeeding usually causes incipient discharge in the rising quadrant but if overspeed is not excessive, most of the load is thrown well over into the receiving hopper. Excessive overspeed causes excessive discharge on the rising side and much of the load falls back into the boot. Low speeds cause delayed discharge, and the load may not be thrown clear, causing a considerable spill back into the boot, but the wear on the receiving hopper is not so great and friable material is not broken up as much as with the more violent ejection of higher speeds.

Table 38. Belt speeds for centrifugal-discharge elevators
(*After Hetzel*)

Diam. of head pulley, in.	Critical speed		82% of critical speed	
	R.p.m.	Belt speed, f.p.m.	R.p.m.	Belt speed, f.p.m.
12	69	217	56	176
15	62	247	51	200
18	56	264	46	217
21	53	292	43	237
24	50	314	41	257
27	47	333	39	276
30	45	353	37	290
33	43	372	36	311
36	41	386	34	320
39	40	408	33	337
42	39	429	32	352
48	37	465	30	377
54	35	495	28	396
60	33	518	27	424
66	32	553	26	449
72	31	584	25	471
84	29	637	23	506
96	27	679	22	554
108	25	707	.....	.....
120	24	754	.....	.....

Loading conditions are affected by belt speed, if the elevator is boot fed. High speeds, especially with boot pulleys of small diameter, may produce such great centrifugal forces that material is prevented from entering the buckets in the lower portion of the run and it is then necessary to carry a deep bed of material in the boot to get proper loading; with heavy pulps and coarse material this causes excessive power consumption and damage to buckets. Table 38 gives speeds for various head-pulley diameters; critical speeds should be used for freely flowing materials, the lower speeds for coarse or dusty materials.

Material coarser than 1/4-in. should not be boot fed.

Buckets for centrifugal-discharge elevators are usually of malleable iron; various styles are shown in Fig. 81. Corresponding dimensions, capacities, and weights are shown in Table 39. Styles *A* and *AA* are most used; *AA* is heavily reinforced on the front edge and corners. Style *B* is used for elevators inclined over 30° to the vertical; the high back prevents spill. Wear is greatest at the corners, especially when the buckets dig material from the boot. Replaceable wearing edges are sometimes used. LIFE of buckets under varying conditions is shown in Table 35. Buckets are fastened to the belt by special flat-head bolts in one or two rows near upper edge of the back of the buckets; Table 40 gives standard spacing. Soft-rubber washers or narrow strips of belting placed between the buckets and the belt protect the belt from cutting by the upper edge of the buckets or by gritty material caught behind buckets.

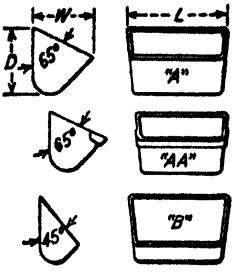

FIG. 81. Standard malleable-iron buckets.

Spacing of buckets should be such that discharging material from one bucket will clear the preceding bucket. *Hetzel's* recommendations for closest spacing are given in Table 41. Increase in speed causes discharge in a more nearly radial direction and therefore permits closer spacing. Sluggish material requires greater spacing to allow free pick-up in the boot. A rough rule is to space the buckets a distance equal to twice their projection; usual spacings are from 12 to 24 in.

Table 39. Standard malleable-iron buckets (see Fig. 81)

Dimensions in inches			Style *A*		Style *AA*	
Length (*L*)	Projection (*W*)	Depth (*D*)	Contents, cubic inches	Weight, pounds	Contents, cubic inches	Weight, pounds
4	2 3/4	3	16	0.80	.....	.....
5	3 1/2	3 3/4	36	1.50	.....	.....
6	4	4 1/4	55	2.50	55	2.75
7	4 1/2	5	85	3.30	.....	.....
8	5	5 1/2	115	4.25	115	4.75
10	6	6 1/4	204	6.75	204	7.50
11	6	6 1/4	223	6.90	223	7.75
12	6	6 1/4	246	7.25	246	8.40
12	7	7 1/4	332	8.20	332	9.00
14	7	7 1/4	391	9.50	391	10.70
14	8	8 1/2	509	11.50	509	16.30
15	7	7 1/4	425	10.25	425	11.60
16	7	7 1/4	467	11.00	467	12.50
16	8	8 1/2	593	12.75	.....	.....
18	8	8 1/2	668	14.80	668	20.24
18	10	10 1/2	1,053	19.50	.....	.....
23	7	7 1/4	732	19.00	.....	.....
24	8	8 1/2	887	23.00	928	26.00

Table 40. Standard spacing of bolt holes for malleable-iron buckets (*After Hetzel*)

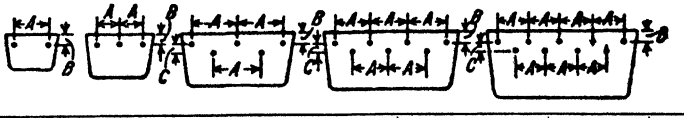

Number of holes....	2		3				5			7		9	
Width of bucket, in.	4	5	6	7	8	9	10	11	12	14	16	18	20
A.....	3	3	2	2 1/2	3	3 1/2	3 1/2	3 3/4	4 7/8	3 1/4	4	3 1/2	4
B.....	1	1	1	1	1	1	1	1	1	1	1	1	1
C.....	....	.....	.....	.....	.....	.....	3/4	3/4	3/4	3/4	3/4	3/4	3/4

Bolt holes 9/32-in. diameter for 1/4-in. bolts.

Load in buckets is rarely more than half the theoretical capacity. Buckets full of free-flowing pulps will spill on reaching the head pulley, causing waste of power. In design, buckets are calculated one-third full in determining capacity and full in estimating power requirements.

Discharge of packed or sticky material is aided by punching holes or slots in the bottom of the buckets; by attaching short lengths of bar iron or heavy chain loosely in the bottom; by a U-shaped wire with the ends bolted to the belt outside the bucket and the bottom of the U projecting to the bottom of the bucket so that as the belt bends around the head pulley, the wire moves and breaks up the packed mass in the bucket; or by high-pressure jets at the head pulley. Suspended boards or rods arranged to tap each bucket sharply as it comes over the head pulley are also used.

Table 41. Bucket spacing, centrifugal-discharge elevators (*After Hetzel*)

Projection of bucket, inches	Closest spacing, inches	
	Freely flowing materials; critical speeds (Table 38)	Coarse or granular material; underspeeds (82%) (Table 38)
2	5	6
2 1/2	6	7
3	7	8
3 1/2	8	9
4	9	10
4 1/2	10	11
5	11	12
5 1/2	12	13
6	12	14
6 1/2	13	15
7	14	17
7 1/2	15	.....
8	16	20
9	.....	22
10	.....	24

Power for elevators

Driving power for elevator belts is transmitted by friction between the face of the head pulley and the belt. This friction must be sufficient to overcome a force equal to the difference in tension between the tight and the loose side of the belt; if it is less, the belt will slip. SLIP may be prevented by lagging the head pulley, or by decreasing the difference in tension between the two sides of the belt by light loading or tightening the belt. Excessive tightening overstrains the belt and brings an excessive load on the head-shaft bearings. The angle of wrap on the head pulley is about 180° for vertical elevators and slightly less for inclined elevators where the down side of the belt hangs loosely. The proper relation between the tensions on the tight and the slack side of the belt can be found from the formula $T_1/T_2 = 10^{0.00758fa}$ in which T_1 = tension on the tight side in lb., T_2 = tension on the slack side, f = coefficient of friction, a = angle of wrap in degrees. Table 42 gives safe values to use under various conditions. Dust or water between belt and pulley decreases the coefficient of friction.

Tension in the rising belt (T_1) is the sum of the weight of material in the buckets, the weight of the empty buckets and belt, the pull due to digging the load or filling the buckets, and friction losses in the boot shaft. WEIGHTS OF MALLEABLE-IRON BUCKETS are given in Table 39. WEIGHT OF BELTING may be approximated as the product of the width in inches × number of plies × 0.03. (See also Table 15.) The PULL DUE TO LOADING AND PICK-UP from the boot can be taken as equivalent to the pull of the load of material in the buckets for a length of belt in feet of from 2D to 12D where D is the diameter of the boot pulley in feet. The most favorable condition arises in a low-speed continuous-bucket elevator, which is front fed with practically no spill; for this a value of 2D may be used. For a continuous-bucket elevator for coarse material, picking up a large part of its load from the boot, 12D should be used; for front feeding of damp sand with little spill, 3D; for thick pulps, 40 to 50% water, 3D to 4D; ordinary dilute mill pulps, boot fed, which do not settle readily, 4D to 6D; and for boot-fed pulps which pack, 10D. PULL DUE TO FRICTION LOSS at the boot is covered by adding 1 or 2% of the total calculated pull from other causes.

Table 42. Coefficients of friction and values of T_1/T_2 for rubber belts on elevators with wrap angle = 180° (*After Hetzel*)

	Coefficient of friction	T_1/T_2
Clean iron pulley	0.25	2.19
Rubber-lagged pulley	0.35	3.00
Dusty work, iron pulleys	0.20	1.87
Dusty work, rubber-lagged pulleys	0.27	2.33
Wet work	0.20	1.87

Tension on the down side of the belt (T_2) is equal to the weight of the empty buckets and belt.

If the ratio T_1/T_2 thus found is greater than $10^{0.00758fa}$ the tension must be increased by take-up and allowance must be made for the added tension in determining the size of belt needed. WORKING STRESSES in elevator belts should be kept below 35 lb. per in. per ply for 32-oz. duck and 40 lb. for 36-oz. duck; in most cases the stress can be kept below 25 lb. Extra plies are usually allowed when external wear is great.

Horsepower to drive the belt = $(T_1 - T_2) \times$ *belt speed in ft. per min.*/33,000.

To determine the horsepower to be delivered by the motor or line-shaft add 5% for each speed reduction through belts, chains, or cut gears and 10% for each reduction through cast gears.

Design of a continuous-bucket elevator

To raise 50 t.p.h. of 2-in. material weighing 100 lb. per cu. ft. 50 ft. vertically, the elevator to slope 10° from the vertical.

As the slope angle is small it may be disregarded in calculation. The volume to be delivered per min. $= \frac{50 \times 2{,}000}{100 \times 60} = 16.7$ cu. ft. Assume the buckets one-third full; then bucket capacity should be $16.7 \times 3 = 50$ cu. ft. per min. = 86,400 cu. in. per min. From Table 37 a 15×7 1/2×12-in. bucket has 450 cu. in. capacity. Number of buckets per min. = 86,400/450 = 192. As the length of the bucket along the belt is 12 in. a belt speed of 192 f.p.m. will be necessary, and from Table 36, a 36-in. pulley will be needed. Gap $= \frac{\sqrt{d^2 + l^2} - d}{2} = \frac{\sqrt{36^2 + 12^2} - 36}{2} = 1$ in., which is less than $l/8$ and therefore satisfactory. If lower speed is desired, a 16×8×13-in. bucket with capacity = 555 cu. in. gives 86,400/555 = 155 buckets per min. or a belt speed of $\frac{13 \times 155}{12} = 168$ f.p.m. and the gap will be 1.13 for a 36-in. pulley or within the limit $l/8$. Using the latter size of buckets, the number of buckets on the upcoming side = $50 \times 12/13 = 48$ (approx.). The load due to empty No. 10 steel buckets = $48 \times 21 = 1{,}008$ lb. The load in these buckets, assuming them full, = $48 \times 555 \times 100/1{,}728 = 1{,}541$ lb. The belt width will be 18 in. Assuming 9-ply belt, the weight per ft. of length is approximately $18 \times 9 \times 0.03 = 4.86$ lb. and the weight on the loaded side = $4.86 \times 50 = 243$ lb. Using a 30-in. boot pulley and assuming fair loading conditions, the pull due to digging in boot = the load carried on $6D$ ft. of belt $= \frac{6 \times 2.5}{50} \times 1{,}541 = 462$ lb. The total tension on the loaded side = 1,008 + 1,541 + 243 + 462 = 3,254 lb. Add for friction between 1 and 2%, say, 46 lb. and $T_1 = 3{,}300$ lb.

The tension per in. of width = 3,300/18 = 183 lb. and with a working tension of 25 lb. per in. per ply, 183/25 = 7.32 or 8-ply belt will be needed. The head-pulley diameter in inches is 4.5 times the number of plies, which is satisfactory. The exact weight of 18-in. 8-ply belt with 36-oz. duck is within the value assumed above.

Tension on the down side of the belt will be 1,008 + 243 = 1,251 lb., hence $T_1/T_2 = 3{,}300/1{,}251 = 2.64$ and the coefficient of friction should equal 0.309 (from the formula $T_1/T_2 = 10^{0.00758f\alpha}$). A rubber-lagged head pulley should be used (see Table 42). Since a large allowance was made in estimating the tension on the rising side, by assuming full buckets, there should be no slip under normal working conditions.

Horsepower to drive the belt = (3,400 − 1,251) × 168/33,000 = 11 hp. Add 10% (= 1.1 hp.) for reduction by cut gears and 5% (= about 0.6 hp.) for belt drive from motor to pinion shaft; the motor power required will be 12.7 hp.; a 15-hp. motor that will operate at high efficiency over a wide range should be chosen.

Size of head shaft. The total weight to be supported = the load due to belt, buckets, and load on the loaded side, 3,400 lb., + belt and buckets on the empty side, 1,251 lb., + a 36×20-in. pulley, 660 lb., + the shaft (assumed), 200 lb., = 5,511 lb. Assuming 4-in. clearance on each side of the pulley, the thickness of the housing as 2 in., and placing 16-in. bearings just outside the housing, $l = 20 + 8 + 4 + 16 = 48$ in. $d^3 = 5{,}511 + 48/1{,}963.5 = 134.8$; d = about 5.12 in. The nearest standard size of shafting is 5 3/16 in.

Design of centrifugal-discharge elevators. Similar procedure should be followed except that in addition belt speed and bucket spacing must be such as to give satisfactory discharge.

Performances. See Table 35; also the various flowsheets in Sec. 2.

Cost of elevating fine wet pulps with belt-bucket elevators ranges from about 0.003 to 0.008¢ per ton per ft. of lift, of which cost power and repairs constitute substantially the whole, about equally divided. Cost for coarse dry materials will tend to be higher, if they are abrasive. In any case these costs are substantially negligible as compared with total milling costs. The important factor is, rather, the question of running time. Accurate data are not available for comparison of time loss in elevating fine pulps as between elevators and centrifugal pumps, but the almost universal adoption of the latter means of elevation over the past 20 yr. is eloquent evidence of the consensus of operators.

Automatic skip hoists, which are used to a considerable extent in feeding iron blast-furnaces and in raising water from shallow mines, were used at one concentrating plant, ALASKA-GASTINEAU (*Ed. 1, Sec. 2, Fig. 75*) for elevation in the roll-screen circuit. For performance see *Ed. 1, Sec. 23, Art. 6.*

15. CHUTES

CHUTES are steeply inclined troughs used for transportation of dry or nearly dry material by gravity; they may or may not be covered. Vertical chutes are usually equidimensional and are closed on all four sides. Round-bottom chutes are sometimes used for transportation of coal to lessen breakage. Chutes have most often been made of wood, lined with some wear-resisting material, but all-steel construction is becoming more common, especially for vertical or nearly vertical chutes.

Chutes must be well supported and rugged enough to stand the shock of material passing through; they must be large enough to pass the desired tonnage, and slope enough to keep the material moving. Covered and vertical chutes should have removable covers to allow access for replacing lining or relieving stoppages.

Liners are always placed on the bottom and frequently on the sides of inclined chutes; vertical chutes are lined on all four sides. Materials used for lining are sheet steel, cast iron, chilled cast iron, manganese steel, steel rails, old iron or steel, wood, rubber, or concrete. Some chutes are built in steps and material is allowed to build up; no lining is then needed. The same effect, *i.e.*, using the material itself as a liner, is obtained in mills of ANDES COPPER CO., NEW JERSEY ZINC CO., and elsewhere, by inserting riffles of steel rail or angle-iron across the bottom of a chute. At the FRANKLIN mill, wet chutes at uniform 45° slope are lined with cast iron on the bottom and steel plate on the sides, in addition to the cross-riffles. At the OGDENSBURG mill, all chutes (at 45° slope) are constructed of 8- or 10-in. channels for sides and 1/4-in. plate for bottom, with a cover of 10-gage sheet; cross-riffles of 1/4×1 1/2×1 1/2-in. angle-iron are welded to the bottom, and discarded belting is often bolted to the sides (*PC*). At the CANISTEO-CLIFFS iron-ore washery (*135 J 341*) a semicircular chute of 32-in. diameter, 40 ft. long, made of 1/4-in. plate in butt-jointed sections, carries 500 t.p.h. of crude ore below 4 1/2-in. size. A 1/2-in. plate lining had to be renewed every 7 da. It was replaced by a chilled cast-iron lining 1 1/4 in. thick, made in segments 18 in. long and of such width and curvature that three segments filled the semicircle; edges and ends were square. Each segment was fastened by three 5/8-in. bolts with countersunk square heads, along its center line. By interchanging middle segments, which received the most wear, with side segments, life of the lining was extended to a whole season.

Chute linings in anthracite breakers have commonly been sheets of blue annealed iron (*66 A 422*), but these are rapidly corroded by acid water. Vitrified clay pipe makes excellent lining and wears indefinitely. Glass has been found too brittle. HUDSON COAL CO. has used Corrosiron (cast iron with about 12% Si). It is made up in flanged U-shaped sections, 18 in. wide and 2 to 3 ft. long, both straight and spiral. At the LOREE breaker this material had, in 1920, already outlasted 10 sheet-steel linings and bade fair to last indefinitely. When new, the surface is rough and requires a steeper slope than after the chute has worn smooth. This difficulty is overcome by setting the chutes on the final slopes, lining with sheet iron, and removing the lining a sheet at a time, beginning at the lower end.

Size. The WIDTH of a chute should never be less than three times the size of the largest piece which it is to carry, if free running is desired. No definite rule can be set for the cross-section of a chute to carry a given tonnage. The width is usually fixed by the size of opening from which the chute takes or to which it delivers its load; DEPTH is usually made much greater than the depth of the stream both to prevent bounding out and for convenience in construction.

Minimum slope at which material will flow freely in a chute depends on the coefficient of friction between the chute lining and the material.

Holbrook & Fraser (*Bul 234 USBM 42*) found that sliding angles on smooth steel surfaces varied not only with hardness and specific gravity but also with the shape of the fragments. See Sec. 7, Table 20. Cubical or rounded pieces slide at smaller angles than flat or wedge-shaped pieces. The distribution of sizes in the material is important, especially if moisture is present; very fine material

Table 43. Data on chutes in American mills (*Q*)

Plant	Material size	Material	Width × depth, in.	Slope	Tons per 24 hr.	Lining		
						Material	Thickness, in.	Life, days
Bunker Hill & Sullivan	6% >3/4-in., 11% <65-m.	Steel	Var.	39 1/2°	1,200	Steel	1/4	200
	R.o.m.	Wood	24×18 *a*	45°	4,800	Steel	1/4	180
Consol. Min. & Sm., Canada	<6-in.	Steel	48×14	36° 50′	6,500	Steel	1/2	60
	<3/8-in.	Steel	17×16	39° 40′ *b*	6,300	CI	1	50
	<1/4-in.	Steel	10×6	56° 20′	1,085	CI	1 *c*	180
Chuquicamata, Chile	8~16-in.	Steel	42×60	26° 40′	1,500	Mn	*e*	.....
	10% >0.371-in.	Steel	42×60	33° 40′	1,000 to 2,500	Mn	.....	.....
Britannia	1/4~1-in.	Steel	18×12	45°	150	Mn	*d*	90
Conda, Idaho	1/2~1 1/2-in.	Wood	9×9 1/2	45°	200	Royalite	1/4	120
	1/8~1/2-in.	Wood	13×10	45°	480	Belting	3/8	200
	1/8~1 1/2-in.	Wood	9 1/2×9 1/2	45°	400	Steel	7/8	300
Nev. Consol., McGill	<12-in.	Concr.	60×36	45° *b*	10,000	70-lb. rail	.....	275±
	<1/4-in.	Steel	13 1/2×16	48°	6,120	WhI	.....	.....
Nev. Consol., Ray	<1 1/2-in.	Steel	29 1/2×32	42° 30′	5,000	WhI	3/8	210
Mountain City	<12-in.	Steel	21×22	39° 40′ *b*	1,600	Mn	1 1/2	.....
Homestake	<6-in.	Steel	48×16	45°	2,000	CI	3 1/2	.....

a Tapering to 16 1/2 in. wide at end.
b At or near minimum necessary slope.
c In semicircular segments, 5-in. radius, 27 in. long.
d Discarded plates, variable thickness.
e Has a grizzly bottom for feeding a belt conveyor.

tends to cake and retard motion; in general, sized material will flow on a flatter slope than unsized. At the IDAHO-MARYLAND mill, where all chutes slope 45°, are about 24 in. wide, and have steel-plate liners, the Brunswick ore (of ordinary consistency) flows freely, but the exceptionally sticky Idaho ore demands constant prodding to keep it in motion (*PC*). SAFE SLOPES are greater than the angle of repose of the material; if smooth liners are used, such slopes are steeper than necessary for sliding on the lining, but the chutes will not clog if the lining becomes rough and uneven. General practice is to make slopes for dry material at least 40 to 45°. Too great slope causes excessive bounding with resultant breakage of material and excessive wear on liners. Converging sides are undesirable; they should not be installed unless required, as for delivering to a conveyor or crusher.

Freda mill, of the COPPER RANGE Co., contains the following installations: (*a*) Six covered steel chutes, of 1/4-in. plate and lined with plate of same thickness; 4 1/2 ft. wide, 1 1/2 ft. deep, 3 ft. long, 27° slope; each delivers 100 to 125 tons (max. 175 tons) per hr. of run-of-mine rock 3×6×10-in. and smaller. (*b*) Other steel chutes deliver 100 to 125 tons per hr. (each) of mine-run rock from pan conveyor to impact crushers; width 18 in.; depth 16 in., length 6 ft., slope 42 1/2°, steel-plate lining 3/8-in. on the bottom, 1/4-in. on sides; removable cover. (*c*) Steel chutes receive <5/8-in. product from a screen and from a belt, delivering their united flow to a cone crusher; each is 16 in. wide, 10 in. deep, 8 ft. long, lined with 1/4-in. plate. (*d*) Five steel chutes, of 1/4-in. plate, 16 in. wide, 10 in. deep, 12 ft. long, sloping 42 1/2°, receive 340 tons per hr. (each) of <7/32-in. product drawn by drum feeders from a surge bin. (*e*) About 30 chutes, set at 45°, deliver to or receive from belt conveyors; most of these are of 1 3/4-in. tongue-and-groove pine, lined with 1/4-in. steel; wooden chutes are cheaper and more quickly erected than steel but occupy somewhat more space.

Table 43 gives data on chutes in several other American mills; except in the three cases noted, each slope is steeper than actually necessary for the particular material.

Automatic chute. Fig. 82 shows a chute installed in the Franklin mill of NEW JERSEY ZINC Co., designed to regulate the flow of dry, dusty ore and to deposit it on a belt conveyor with minimum disturbance. The chute *1*, 12 × 12 in. inside, formed of steel sheet reinforced with angle-iron, is rigidly connected to a vertical member *7* and a horizontal member *8*, the triangular structure thus formed being suspended and free to swing on the crossbar *6*. Counterweight *2* and helical spring *3* together act to hold the empty chute at a slope of 45°, in the position indicated by solid lines. In that position, the horizontal rectangular opening at the extreme bottom of the chute (the vertical end being permanently closed) rests upon and is closed by the plate *4*. When enough ore accumulates in the chute to overbalance the spring and counterweight, the bottom of the chute swings outward and allows ore to drop onto the belt. A flexible connection *9* between chute and hopper prevents escape of dust in that direction.

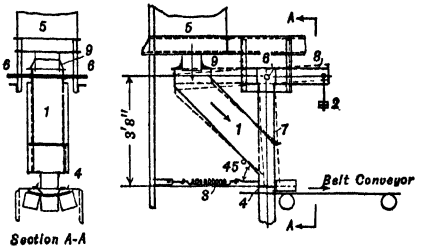

FIG. 82. Automatic chute.

16. LAUNDERS

A LAUNDER, as distinguished from a chute, is a trough for transport of solid material mixed with enough water to impart definite fluidity to the mixture. As a result of such fluidity, launder slopes may be, and usually are, much lower than chute slopes. Solid material is transported in launders either wholly in suspension or by rolling along the bottom under the impulse of the flowing water (BED-LOAD MOVEMENT) or by a combination of these two actions comprising a series of leaps and bounds with intervening rolling, called SALTATION.

Resistance to movement is caused by inertia of the solid and by friction both within the mass and between the mass and the wetted surface of the launder. Inertia varies with the size and density of the particles; friction varies with velocity, the shape of the launder, the nature of the wetted perimeter, the amount of material flowing, the percentage of solids, and the size, shape, and density of the particles.

Carrying force is the impulse of the stream, *i.e.*, a function of its mass, velocity, and direction. The more water flowing at a given velocity the higher the velocity of a given mass of water, and the more intense its turbulence the greater its transporting power.

Specific mathematical application of the foregoing generalizations to launder transport has proved impossible to date. Wilson (*A TP 1563*) made an ingenious attempt to apply modern turbulence theory, and evolved a general equation which, when fitted to the best experimental data for evaluation of constants, yielded an empirical equation usable in design (see Figs. 87 and 88, and the accompanying text). The method is not yet (1943) proved. Most designers today depend on records of proved minimum or working sizes and slopes for similar materials, and apply generous factors of safety, on the ground that regaining wasted headroom is much cheaper than loss of running time caused by clogged launders.

Performance. See Table 44.

Table 44. Launders

Mill	Material transported				Launder			
	Nature *ap*	Size	Water content *a*	Tons solid per 24 hr.	Width × depth, in.	Slope, in. per ft.	Wetted depth, in.	Lining
Bunker Hill & Sullivan	.....	15~7-mm.	50	400	8×8	4	1	CI, *an, ac*
	.....	10% >28-m.	18	720	8×8	3	3/4	Steel, *v, ad*
Tennessee Copper Co.	.....	100-m.	57	250	.....	7/8 *b*	.....	None
	.....	20-m.	34	1,200	11×10	1 3/4 *b*	1	Wood, *ab, ae*
Noranda	.....	3/8-in.	25	3,100	10×10	1 *b*	3	Rubber, *v, af*
	.....	70% <200-m.	20 to 30	1,000	10×7 1/2	1	3	Rubber, *v, af*
	.....	99% <200-m.	60	300 to 500	12×18	3/4	.....	Rubber, *v, af*
	.....	60% <200-m.	50	2,600	10×16	3/4	4	Rubber, *v, af*
	.....	80% <200-m.	60 to 65	2,200	12×10	1/2	4	Rubber, *v, af*
Phelps Dodge, New Cornelia	.....	21% >10-m.	20	625	11 1/2×15	5 *b*	1 1/2	{ Wood *an* { Rubber *t*
	.....	48-m.	78	2,000	23×19	1/4 *b*	2	Wood *an, ae*
	.....	48-m.	80	9,650	34×20	1/4 *b*	6	Wood *an, ae*
	.....	48-m.	55	3,000	23 1/2×20	1/2 *b*	5 1/2	Wood *an, ae*
	FC	65-m.	80	600	11 1/2×9	3/4 *b*	2	Wood *an, ae*
Britannia M. & S. Co.	.....	38% >8-m.	25	3,000	12×14	2 1/4 *b*	4	Rubber *t*
	.....	65% >65-m.	30	2,000	12×14	1 3/4	4	Rubber *u*
	.....	23% >65-m.	70 to 75	5,500	28×14	9/64 *b*	6	Concrete *t*
Nevada Consolidated, McGill	.....	5% >14-m.	24	1,150	6×10	6 3/8 *b*	2 1/2	Rubber *v, ag*
	.....	4% >48-m.	71	5,200	23×10	1/2 *b*	2-5	WhI *t, ah*
	FC	.....	85	500	11 1/2×10	1 *b*	2	Burlap *aa, al*
Nevada Consolidated, Ray	.....	1-in.	25	3,000	15×15	5	3	*d, z*
	.....	8-m.	35	1,500	15×15	1 5/16 *b*	3	Concrete *an*
	.....	20-m.	25	1,700	13×13	1 3/4 *b*	2	Concrete *an*
	BMD	.....	21	2,000	16×10	1 3/16 *b*	5	CI *an, aj*
International S. & R. Co., Tooele	.....	1/4-in.	40	1,150	12×10	1 1/2 *b*	.....	Steel *t, ae*
	.....	10% >65-m.	78	576	12×10	1 1/4	.....	None
	FC	90% <200-m.	70 to 80	*e*	12×10	1 1/4	.....	None
	FC	90% <200-m.	50	*e*	12×10	1 1/2 *b*	.....	None
Mountain City	*FC*	75% <200-m	88	150	10×12	1 *b*	3	Wood *y*
	.....	65% <200-m.	88	325	10×12	1 *b*	3	Wood *y*
Andes Copper Co.	.....	4.5% >8-m.	21	2,000	16×10	1 3/16 *b*	5	CI *an, aj*
	FC	65	90	.....	16×22	3/16	2	Steel *v, aj*
	FT	48	80	.....	16×24	1/2	6	*f, z, ao*
	FT	48	80	.....	24×24	1/8	12	Wood *y, g*
Utah Copper Co., Arthur	.....	17% >10-m.	17	660	9 1/2×10	7 *b*	1 3/8	Rubber *x, ag*
	.....	51% >100-m.	60	3,370	15×10	1 1/8 *b*	4 1/8	Rubber *x, ak*
	GT	16% >100-m.	72	30,000	56×20	3/16 *b*	8	Fir *w, al*
	FC	4% >100-m.	85	802	20 1/2×9	3/4 *b*	1 3/4	*w, ah*
San Francisco Mines of Mexico	.....	60% <200-m.	65	1,420	11 1/2×10	3/4 *b*	6	CI *w, ah*
	.....	60% <200-m.	65	1,700	11 1/2×10	1/2	6	CI *an, al*
	C	20-m.	85 *h*	67	7 1/2×10	3 *b*	4	CI *an, al*
	FC	100-m.	80	100	11 1/2×10	1/2	3	None, *an, al*
Cerro de Potosi	.....	6% >35-m.	50	1,916	12×10	5/8 *b*	6	CI *w, am*
N. J. Zinc Co.	.....	20-m.	90	29	16×7	1/8 *b*	1 1/2	.....
	t	.....	94	.....	7×4	7/8	1 1/2	Steel *v, al*
	.....	20-m.	96	22	13 1/2×5	1	1 1/2	Steel *v, al*
Utah Consolidated	*BMD*	3/8-in.	50	1,000	11 1/2×10	1 1/4 *j*	.....	.....
	BMD	20-m.	50	1,500	11 1/2×10	1 1/8 *j*	.....	.....
	T	65-m.	60	1,050	11 3/4×9 1/2	1/2 *j*	.....	.....
Silver Dyke	*BMD*	44% >60-m.	75	1,200	12×—	1 1/16	.....	.....
	FC	98% < 100-m.	80	15	10×—	5/8	.....	.....
Shattuck Arizona	*TaF*	28-m.	63	.....	7 3/4×9	3/4	.....	.....
	TaC	28-m.	.....	.....	.....	1 *k*	.....	WB
	TaC	4-m.	.....	.....	7 3/4×9	2	.....	CI
	GT	28-m.	70	.....	13×7	3/4	.....	WB
Alaska Gastineau	*GT*	14-m.	85	5,000	44×22	3/8	4	Wood
Inspiration	*GT*	3.6 >40-m.	71	18,000	42×—	3/8	.....	.....

Table 44. Launders—*Continued*

Mill	Material transported				Launder			
	Nature *ap*	Size	Water content *a*	Tons solid per 24 hr.	Width × depth, in.	Slope, in. per ft.	Wetted depth, in.	Lining
Federal Lead Co., Flat River	*JT* *JC* + *TaC*	12~2-mm. 4-m.	75 90	1,800 100	30×10 22×10	2 2	3 1	CI Steel
Nevada Consolidated, Chino	....	3/4-in. 6-m.	30 to 50 60	3,600 2,400	5×13 5×13	2 3/4 2	3 2	WhI Concrete
Tungsten Mines Corp.	.....	3/16-in.	85	.....	2×11	3/4	2	Wood
Anaconda, Old gravity mill. *96 J 501*	*O* *O* *O* *O* *JC* *JC* *TaF* *TaF* *TaC* *TaM* *TaT* *TaF* *TaF* *TaF*	7/8-in. 5-mm. 4-mm. 2 1/2-mm. 6-mm. *l* 7-mm. *l* 0.3-mm. 60-m. 60-m. *l* 60-m. *l* 48-m. 16-m. *l* 40-m. *l* 16-m. *l*	78 84 83 89 96 93 94 93 94 94 91 88 93 82	....	10×15 8 1/2×7 10 1/2×9 1/2 8 1/2×7 6 1/2×7 19×10 7×7 1/2 4 1/2×5 1/2 8 1/4×11 5×4 1/2 7 1/2×7 7 1/2×7 7 1/2×7 7 1/2×7	2 3 1 3/4 2 1/2 1 1 1/4 1 1/4 1 1/4 3/4 3/4 3/4 1 1/4 1 1/4 1 1/4	1 1/4 1 1/4 1 1/2 1/2 1 1 1/2 3/4 3/4 3/4 1/2 1/2 1/2 1/2	CI CI CI CI CI CI None None None None None None None None
Cananea Cons. Cop. Co. *95 J 575* *aq*	*O* *JT* *JT* *JC* *O* *ClS* *JC* *JC* *GrM* *Sa* *ClS* *TaF* *TaC* *TaC* *Sl* *Sl* *VC* *VC, TaC* *VT* *TaT, JT* *Sa, T* *Sa, T* *Sl* *O* *Sl* *VC* *VC* *VC* *VT*	1 1/4-in. 1 1/4-in. 3/8-in. 1 3/8-in. 4-m. 4-m. 4-m. 4-m. 8-m. 8-m. 6-m. 16-m. 16-m. 30-m. 80-m. 80-m. 65-m. 8-m. 35-m. 8-m. 8-m. 8-m. 150-m. 12-m. 150-m. 150-m. 150-m. 65-m. 150-m.	50 52 75 74 82 60 95 86 63 47 94 89 96 88 99 83 97 95 88 97 95 95 81 83 81 ..... 95 90 86	....	12×10 9 1/2×10 7 1/2×10 7 1/2×10 5 3/4×10 5 3/4×8 12×6 1/2 7 1/2×10 11 1/2×8 3/4 7 1/2×10 5 1/2×8 5 1/2×7 1/4 9 1/2×9 1/2 7 1/2×4 9 1/2×6 1/2 11 1/2×9 1/2 16×10 6×6 1/2 11 1/2×9 1/2 22×9 1/2 11 1/2×12 1/4 11×12 12 1/2×9 1/2 11 1/2×10 7 1/2×6 18×12 7 1/2×7 12×10 11×10	3 1/2 3 2 1/4 1 2/3 *b* 1 1/2 *b* 3 1/3 3/8 *m* 1 13/16 9/16 1 2/3 1 2/3 1/2 1/8 *o* 3/32 *p* 9/16 1/8 Level *o* 1 15/16 1/3 1/3 *b* 11/32 *b* 9/32 *b* 1/4 1/4 1/3 Level *o* 2/3 15/16 7/32	....	CI CI CI CI CI CI *n* CI *n* CI CI *n* Wood *s* *n* None None None None *n* Wood *n, t, q* Wood *n, t, q* Wood *n, t, q* *n* *n* None None Glass *n, w* Concrete *n*
Lucky Tiger *ar*	*O* *Sa, O* *Sa, O* *Sl, O* *Sl, O, T* *Sa, T* *Sa, M* *TaC* *Sl, T* *Sl, M* *Sl, C*	48% <200-m. 20-m. 60~200-m. <200-m. <200-m. 20-m. 8.4% >40-m. 40~200-m. <200-m. <200-m. <200-m.	86 75 75 95 80 83 67 ..... 87 80	....	8×8 6×6 6×6 8×8 6×6 8×8 4×4 6×4 6×6 4×4 6×4	7/8 7/8 3/4 1/8 3/8 1 1 1 3/4 3/8 5/8 1 1/8	....	....
St. Joseph Lead Co., Missouri mills	*O* *Sa, Ta, F* *Sa, Ta, F* *Sa, Ta, F* *Sa, Ta, F* *Sa, Ta, F* *Sa, Ta, F* *Sa, Ta, F* *Sa, Ta, F*	8-m. 0.83-mm. *s* 0.62-mm. *s* 0.45-mm. *s* 0.32-mm. *s* 0.29-mm. *s* 0.22-mm. *s* 0.21-mm. *s* 0.20-mm. *s*	78 65 66 66 80 63 62 61 71	850 52 78 41 49 49 48 52 48	12×9 4 3/4×3 4 3/4×3 4 3/4×3 4 3/4×3 4 3/4×3 4 3/4×3 4 3/4×3 4 3/4×3	2 3 15/16 6 1/2 7 4 3/8 2 1/4 2 1/2 2 1/8 2 1/4	....	CI or Rubber *n* CI or Rubber *n* CI or Rubber *n* CI or Rubber *n* CI or Rubber *n* CI or Rubber *n* CI or Rubber *n* CI or Rubber *n* CI or Rubber *n*

Footnotes for Table 44:

a % water.
b At or near minimum slope; tendency to clog.
BMD Ball-mill discharge.
C Concentrate.
Cl Classifier.
d Silica blocks.
e Intermittent service.
f Slag blocks.
F Feed.
Fl Flotation.
g Moved and repaired at each lift of tailing dam.
G General.
Gr Reground.
h Additional water sometimes required.
i Wilfley-table product.
j Too flat.
J Jig.
k At 0.56 in. per ft. much water was required.
l No slime.
m Shaking launder; heavy table head-motion; 160 s.p.m.
M Middling.
n Corners filled with 45° wood molding strip.
o Drag-belt launder; old 4-in. drive belt without scrapers in bottom. 75 f.p.m.
O Whole ore.
p Shaking launder, 180 s.p.m.
q Grain across flow.
r Thickened.
s Mean size of classified product.
Sa Sands.
Sl Slimes.
Sp Spigot product.
t 1/2 in. thick.
T Tailing.
Ta Table.
u 1 1/2 in. thick.
v 1/4-in. thick.
V Vanner.
w 3/4 in. thick.
Wb Wood block.
x 3/8 in. thick.
y 2 in. thick.
z 3 in. thick.
aa 7-oz.
ab 7/8 in. thick.
ac Life, 30 da.
ad Life, 60 da.
ae Life, 1 yr.
af Life indefinitely long.
ag Life, 200 da.
ah Life, 10 yr.
ai Life, 90 da.
aj Life, >11 yr.
ak Life, 2 yr.
al Life, 4 yr.
am Life, 6 yr.
an 1 in. thick.
ao Life, >7 yr.
ap For character of ores, see flowsheets of specific mills, Sec. 2.
aq Copper sulphides, native copper, oxides and carbonates of copper, pyrite, garnet, and minor amounts of galena and sphalerite in a gangue of limestone and siliceous rocks.
ar Complex sulphide ore.

At CALUMET & HECLA, steel-lined wooden launders have the following grades, in. per ft.: 3/16 for 3/16-in. material; 1/8 for <28-m.; 1/16 for <100-m.; ratios of water to sand reach as high as 30 : 1 (*PC*). At CONS. MINING & SMELTING CO. of Canada, launder grades vary between 3 3/4 in. per ft. for classifier sands (all <14-m., 5% <200-m.) and 1/4 in. per ft. for final mill tailing (11% >150-m., 80% <200-m.). All launders are generously proportioned to prevent spill, and usually run about one-third full; flow of bulky froths is accelerated by water sprays where needed. Several varieties of lining have been tested: (*a*) Rubber, 1/2 or 1/4 in. thick, with 1 or 2 plies of duck; this has been the most satisfactory material, when ordinary lumber was not sufficiently resistant; (*b*) wire-reinforced glass gave longer life and would be preferred even to rubber except for its liability to crack; (*c*) blocks cast from lead blast-furnace slag gave excellent service; (*d*) cement concrete wore rather rapidly, and involved delays while it was setting; (*e*) one specimen of wood from Australian "Ironbark" lasted 5 times as long as local lumber but only one-third as long as rubber (*PC*).

Slopes recommended by various designers are shown in Figs. 83, 84, and 85. In Fig. 83 curves *A* and *B* are the minimum slopes determined by Blue (*84 J 536*); curve *A* is

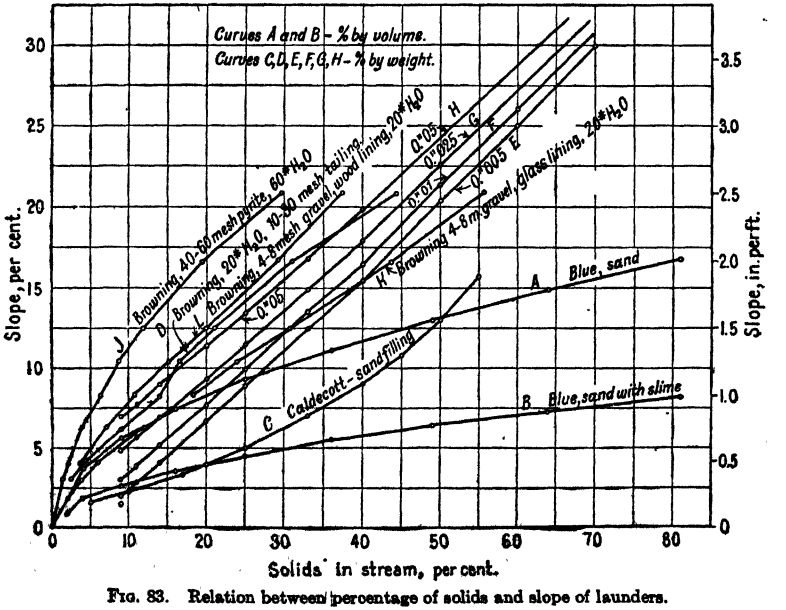

FIG. 83. Relation between percentage of solids and slope of launders.

for beach sand and curve *B* for angular mill tailing with some slime. Curve *C* gives slopes found suitable by Caldecott (*14 JCM 486*) for launders carrying sand containing about 4% pyrite, 10% of the sand being coarser than 48-m.; these values were calculated from the empirical formulas: $W = 12/(G - 1)$; $P = 100W/(W + 1)$ and $G = (W + 12)/W$, in which W = ratio by weight of water to solids, P = per cent. by weight of water, G = slope of launder, per cent. Curves *D*, *J*, *K*, and *L* were plotted from results obtained by Browning (*29 M&M 300*); *D* is for 10~30-m. limestone tailing (40% >20-m. and 60% 20~30-m.) in a rectangular wooden launder 2 1/2 in. wide; *J* is for 40~60-m. pyrite table concentrate in a wooden launder 2 1/2 in. wide; *K* and *L* are for 4~8-m. ordinary rounded pebbles, *K* with glass lining and *L* with wood. Curves *E*, *F*, *G*, and *H* were plotted from a table by Julian, Smart & Allen (*Cyaniding gold and silver ores*), for sand of predominating sizes 120-, 48-, 28-, and 14-m. respectively. Caldecott and Powell (*14 JCM 121*) state that sand pulp will flow slowly with 30% water on a 30% slope; with 40% water, on 20% slope; and with 60% water on a 10% slope.

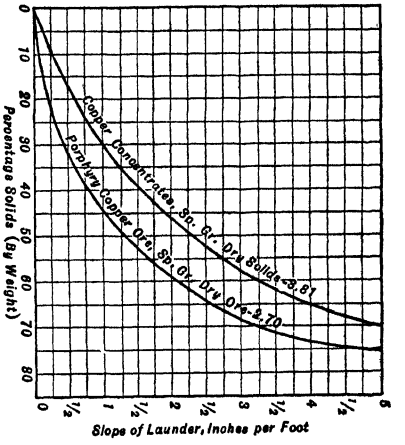

FIG. 84. Launder slope *vs.* percentage of solids (*after Linke*).

The wide divergence of the curves in Fig. 83 is due to the variety of materials and conditions. The largest size investigated was 4-m. rounded gravel. The slope is seen to vary approximately as the square root of the particle size. Velocities were 7 to 10 ft. per sec.

Fig. 84 (*153 A 655*) gives results of tests at UTAH COPPER CO. on raw monzonite ore (sp. gr., 2.7) and on (chiefly) chalcopyrite concentrate (sp. gr., 3.81) from the same; maximum grain size was not stated, but was probably <35-m. Fig. 85 (*153 A 655*) contains data based upon Rand siliceous ore (Schmitt, *2 RMP*) up to 1/2-in. size, and on UTAH COPPER porphyry ore for the coarser sizes; the whole curve proved applicable to the latter ore.

Use of curves. Bear in mind the characteristic of the particular material to be carried and err on the safe side; if insufficient slope is provided, water must be added, which may be wasteful or undesirable in subsequent treatment.

GILBERT (*PP 86 USGS*), summarizing experiments on the carrying capacity of water in flumes, stated that much of the movement is by rolling or sliding, especially when the current is slow and the solid coarse; that with a swift current or fine solid the particles travel by saltation and the finest material is suspended. When the principal movement is by rolling or sliding, the capacity of the current increases with coarseness of the solid material, up to the point at which the current is barely able to start the particles. When the principal movement is by saltation, the capacity increases with fineness of solid up to and probably beyond the critical fineness at which the solid goes into suspension.

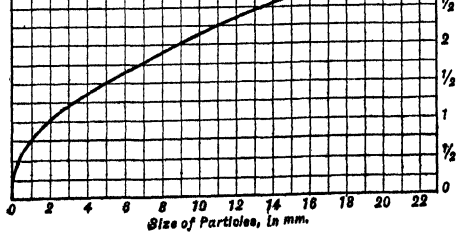

FIG. 85. Launder slope *vs.* particle size (*after Linke*).

BLUE'S experiments (*84 J 536*) were conducted in a U-shaped sheet-iron launder, 50 ft. long, 5 in. deep, with semicircular bottom of 2-in. radius. Two classes of solid material were used, (*a*) beach sand (77% 40~80-m.; 1% <100-m.; average size about 60-m.), (*b*) sharp quartz sand containing varying amounts of clayey slime, in the proportions of about 10% of slime and 90% of sand; the sand averaged about 80-m., 90% <40- and 10% <200-m. Various mixtures of each of these solids with water were fed and observations made at the slope when the "least perceptible quantity of sand just began to fall to the bottom." Depth was measured to 1/16 in.; rate of flow and the proportion of solids by

volume were determined by time samples taken at the discharge end and average velocities were calculated from these data. The results with beach sand indicated that the proportion by volume of wet solids in suspension, q, varied as the square of the slope S or, $S = k\sqrt{q}$. The sand-slime results were similar but less concordant; they indicated that with slime present more solid could be carried on a given slope with a given amount of water.

The value of k in the above equation was determined to be 0.186 for the beach sand and 0.091 for the sand-slime mixture. Blue also used his results to calculate values of the COEFFICIENT OF ROUGHNESS, n, in Kutter's formula by solving for values of the constant C in the Chezy formula (Sec. 20, Art. 2) and substituting in Kutter's formula (Sec. 20, Art. 2). The values of n obtained indicated the relation, $n = 0.0125q^{0.055}$ for beach sand and $n = 0.0105q^{0.02}$ for the sand-slime mixture. These values of n can be used only when the roughness of the launder is about the same as that of the sheet-steel channel used. In the case of beach sand, an ill-defined relation exists between v and q, *e.g.*, $v = 8.148\sqrt[5]{q}$. The experiments covered slopes ranging from 0.107 to 0.008, proportions of solids by volume from 0.0022 to 0.350; and depths from 5/8 in. up to 3 3/4 in. Calculated values of C varied from 72.2 to 135 and of n from 0.0080 to 0.0123. For the sand-slime mixture the slopes varied from 0.052 to 0.009, proportion of solids from 0.277 to 0.013, depths from 5/8 in. to 3 3/4 in., C from 70.0 to 128.0, and n from 0.0090 to 0.0118.

Table 45. Depth of water in a rectangular wooden trough (planed and painted) 12 in. wide

Discharge, cu. ft. per sec.	Discharge, cu. ft. per sec. per in. of width	Slope, ft. per ft.	Depth, ft.	Depth, in.
0.363	0.032	0.01	0.12	1.44
0.363	0.032	0.02	0.096	1.152
0.363	0.032	0.03	0.082	0.984
0.734	0.061	0.01	0.194	2.328
0.734	0.061	0.02	0.154	1.848
0.734	0.061	0.03	0.136	1.632

JULIAN AND SMART (*Cyaniding gold and silver ores*, J. B. Lippincott Co., 1921) calculate the size of launders by use of the Chezy formula ($v = C\sqrt{rs}$), assuming a relation between width and depth to obtain the minimum wetted perimeter (for rectangular launders, width = twice the depth), and making $C = 80$, which is an average value obtained from actual measurements of flow in launders carrying slime overflow and average stamp-battery pulp. Then if w = depth of the stream in ft., $2w$ = width, $2w^2$ = area of cross-section, $4w$ = wetted perimeter, $r = w/2$, and $v = C\sqrt{ws/2}$. If Q = cubic ft. per sec., $Q = 2vw^2 = 2Cw^2\sqrt{ws/2}$ or $Q^2 = 2C^2w^5s$, whence

$$w = \sqrt[5]{\frac{Q^2}{2C^2s}} = 0.151\sqrt[5]{\frac{Q^2}{s}}$$

Any relation between the width and depth of the stream may be assumed; various assumptions should be tested until the size determined is best for the conditions at hand. In the construction of small wooden launders the width is influenced by the widths of good lumber available without ripping or making a longitudinal seam down the center.

Table 45 (Gilbert, *PP 86 USGS*) is of value in determining dimensions, using Julian and Smart's method for calculating launder size.

RICHARDS (*3 OD 1592*) gives Fig. 86 from Overstrom's data. The most economical water quantity is determined by following the ordinate for a given slope to its intersection with the inclined straight line on which weight of water is indicated. The weight of sand that 1 lb. of water will transport is then found by following the same ordinate to its intersection with the curve for that quantity of water and reading on the left-hand scale. To find the width of launder in inches divide the total weight of sand to be moved by the product: *lb. of water per in. of width* × *lb. of sand moved per lb. of water*. The diagram was plotted from experiments with quartz from 40- to 150-m. flowing in a wooden launder 2 1/2 in. wide. It indicates that the amount of solid carried is independent of the wetted perimeter. The curves indicate that there is a certain quantity of water for each slope that will carry a maximum amount of solids per lb.

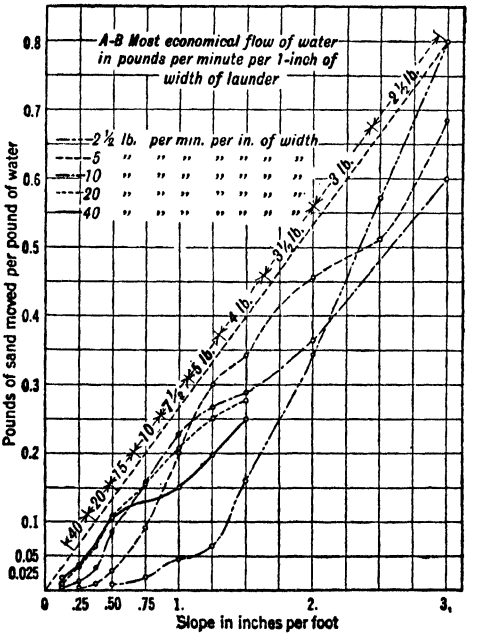

FIG. 86. Launder flow (*after Overstrom and Richards*).

LINKE (*153 A 655*) gives the following formulas as an aid to calculations involving flow of pulps, wherein: Q = g.p.m. of pulp; p = sp. gr. of pulp; a = dry tons ore per 24 hr.; b = sp. gr. of dry ore; c = % of solids in pulp; d = tons of pulp per 24 hr.; f = tons of water in pulp per 24 hr.; g = g.p.m. of water; h = lb. dry ore per min.

Given	Formulas
a, c	$d = \frac{100a}{c}$
a, c	$f = \frac{100a}{c} - a$
a, c	$g = \frac{\frac{100a}{c} - a}{6}$
a	$h = 1.3889a$
a, b, c	$Q = \frac{\frac{a}{b} + \frac{100a}{c} - a}{6}$
b, c	$p = \frac{100}{100 - \frac{c(b-1)}{b}}$
Q, b, c	$a = \frac{6Qbc}{c + 100b - bc}$
p, b	$c = \frac{100pb - 100b}{pb - p}$
p, c	$b = \frac{pc}{100 + pc - 100p}$

WILSON (*A TP 1563*) recommends design of launders according to Figs. 87 and 88. For use there must be known: Q = unit volumes of pulp per unit of time; d_g = equivalent sand roughness = diameter of grains which would, if packed, give the same roughness as that of the channel; w_s = unit weight of solids; w = unit weight of liquids; p = concentration of solids, *i.e.*, weight fraction of solids per unit weight of mixture; v_s = settling velocity of solids. Units must correspond, *e.g.*, ft., lb., sec. To use the charts, assume a value of b (= width of launder), compute the corresponding value of the abscissa in Fig. 87, and read d (= depth of stream). Then calculate $V = Q/bd$, compute the abscissa for Fig. 88, and read s (= decimal fraction slope). If proportions of stream are not as desired, reassume b. The curves have not been investigated beyond the limits shown, and their applicability to unusual pulps is not known. Slopes calculated will be minima, *i.e.*, equilibrium deposition of solid is contemplated; this is a condition for minimum wear.

Initial slopes. When material fed to a launder starts practically from rest, its velocity increases owing to the component of gravity acceleration parallel to the bottom of the launder, reduced by frictional resistance both within the mass of flowing material (viscosity) and between the flowing material and the sides and bottom of the launder. Velocity continues to increase until frictional resistance equals the gravitational force, thereafter remaining constant provided slope, shape, lining, etc., remain the same. Experimental evidence indicates that maximum velocity is reached quickly in launders on moderate slopes, and it is probable that in most cases launders are so fed that the initial velocity is close to or even greater than the velocity that would be reached starting from rest. If a launder at uniform slope is capable of holding solid material in suspension during the acceleration period, it is capable of carrying a larger load after constant velocity is reached. Practice recognizes this by increasing the slope for a short distance at the head end; velocity is thus quickly increased and full advantage may be taken of the carrying capacity of the stream at constant velocity.

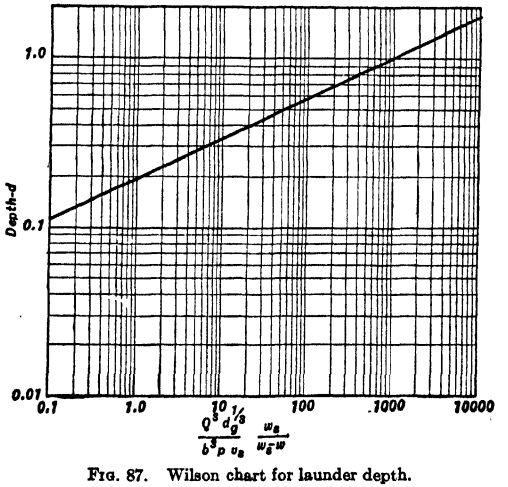

FIG. 87. Wilson chart for launder depth.

Shape of launder. Frictional resistance can be reduced in flumes or conduits for water by making the shape of the channel such that the wetted area is the smallest possible for the volume flowing. This is accomplished by making the bottom semicircular, which gives the smallest wetted perimeter for a given cross-section. The same principle applies to pulp in launders, when the solid material is practically all carried in suspension, but when this is carried wholly or largely by rolling, a semicircular bottom restricts the area available for free motion of the particles, and a rectangular cross-section is better. Gilbert found that rectangular or box flumes can carry more coarse solid than semicylindrical flumes of similar width and the same flow of water. Reduction of wetted perimeter likewise reduces the area exposed to abrasive action, and liner consumption is thus decreased. But the condition of least wetted perimeter may not always be most desirable. Where comparatively coarse material is transported, chiefly by rolling or sliding, it may be advisable to use a shallow stream, only slightly deeper than the size of the largest pieces

of solid; additional depth increases the amount of water used but only slightly increases the effective velocity in the lower zones of the stream. Gilbert, dealing with relatively coarse material in flumes, found that up to a certain limit, varying with conditions, the carrying capacity of the stream increased with increasing relative width of channel, and concluded that the ratio of depth to width for highest efficiency under such conditions would rarely be greater than 1 : 10 and often as small as 1 : 30, but that on large operations the width would usually represent a compromise between efficiency and cost of construction and maintenance.

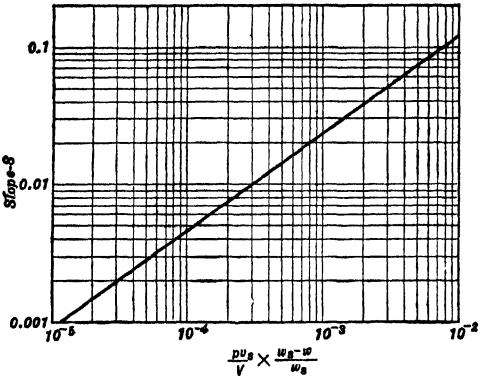

FIG. 88. Wilson chart for launder slope.

The use of wood for launders leads naturally to rectangular cross-section. Triangular-shaped cleats nailed into the corners of wooden launders make the shape of the bottom approach semicircular. V-SHAPED LAUNDERS of wood are used to a limited extent, having the advantage of simplicity. The shape may be made whatever is desired when sheet steel or cement is used.

Reinforced-concrete launder (Fig. 89) (*96 J 22*) was designed to carry overflow water 400 ft. It was cast in 16-ft. sections. The concrete mixture was 3 parts of 5/8-in. jig tailing, 3 parts ordinary mill tailing from 1/4-in. to 10-m., 1 part fine sand, and 1 part cement; the bottom was 2 1/2 in. thick; the sides 3 in. at the top, increasing to 5 1/2 in. at the bottom; a 4×1-in. ridge was carried along the bottom on each side; strands of worn hoisting rope were used for reinforcement. Single 1/2-in. strands were run along the top and two double 1/2-in. strands were placed along the bottom on each side. These were wrapped with wire about 5 ft. from the ends and two single strands, one from each pair, were taken up to the top of the side (*C* to *A*) while other two strands continued to the end of the section. Hooks *A* of 3/8-in. rod threaded at one end were used to draw the strands tight. Pieces of 1×1/8-in. strap *B* were put in at 18-in. intervals; at every other strap a piece *C* was run across the bottom with a slight turn-up at each end. The bottom was reinforced longitudinally by three 1/2-in. strands above the straps. Forms of 1-in. board were built up as shown; the bottom form *D* was supported on wedges *F*,

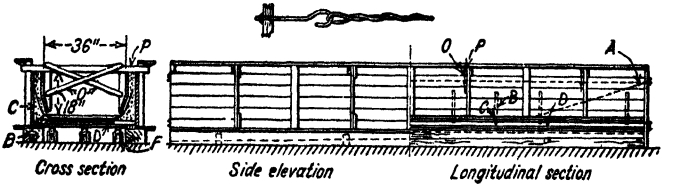

FIG. 89. Reinforced-concrete launder.

made by ripping 2×10-in. hardwood planks, 16 ft. long, diagonally; it was easily removed by knocking out these wedges. The inside forms were held in place by 1/4×1-in. iron braces *O*, so arranged that the forms could be swung in and held in place away from concrete when removing by use of extra holes in the braces. The cost was $0.75 per ft., compared with $2.40 per ft. for iron pipe of equivalent capacity.

Turns and bends should be avoided, if possible; sharp turns cause clogging on flat slopes and bends cause excessive wear of linings. The slope at turns is generally increased to avoid clogging. Schmitt (*2 RMP 88*) recommends bend radii not less than 10 times the width of the launder and increase of from 1 to 2% in slope. Linke (*loc. cit.*) uses the formulas

$S = (V/60)^2 \div 2.68R$, and $G = S(\sqrt{1 + R^2} - R)$, in which

V = velocity, ft. per min.; R = radius of curve, ft.;

S = crosswise slope, or banking, of bottom, in. per ft.;

G = additional grade to compensate for curve, in. per ft.

Junctions should be made so that the direction of flow in each launder is approximately the same. Boxes or small sumps are frequently used at junction points and sharp turns; the exit should be raised a few inches above the bottom so that the bottom may fill with settled solid and decrease wear and splashing.

Depth of launder should be sufficiently greater than the depth of the stream to take care of splashing and of any sudden surges. *Julian, Smart, and Allen* recommend making the launder 50% deeper than the stream for steady flow and 100% deeper where fluctuations are expected. Launders in practice show a much greater allowance in most cases. Of 95 launders reported, 71 had depths more than 3 times the wetted depth; the range was 1.3 times to 20 times and the average about 6.2 times (Q). In most cases, the launders with the smallest ratios were those conveying tailing to dump, where spilling was of slight importance. See also Figs. 87, 88.

Liners are selected with reference not only to their frictional resistance but also to their wearing quality and cost. WOOD is usually the most easily available material but its life is short, except where only fine solid in dilute suspension is flowing. Small wooden launders carrying material less than 1-mm. maximum size are generally left unlined; larger sizes are sometimes wood-lined. The life of wood in such service is long, it is easily replaced, and its lightness saves in the amount of support necessary. The life can be increased almost indefinitely by placing cleats of wood or angle-iron across the bottom at short intervals; solid material banks behind the cleats and makes a natural lining; frictional resistance is increased, however, and slope must be increased.

At the YMIR MINE, West Kootenay, B. C. (*34 A 602*), a 6×8-in. box-launder with 1-in. transverse riffles spaced 5 in. had a satisfactory life even when using soft hemlock or cedar lumber; the material was vanner tailing; the minimum slope was slightly under 5% (0.6 in. per ft.). At ALASKA-GASTINEAU a 2-in. fir lining in a 22×44-in. launder carrying 5,000 tons per 24 hr. of <1-mm. material, in a pulp containing 15% solids on a slope of 0.38 in. per ft., lasted 187 days. The general-tailing launder at the NACOZARI mill, carrying 2,295 tons solids per 24 hr. (2% > 35-, 58% < 200-m.) in a pulp containing 81% water, was 22 in. wide and 10 in. deep and usually flowed about half full at 9.2 ft. per sec. It was lined with 1-in. boards, those on the bottom being laid crosswise. Uniform and near minimum grade was 1.5%; indications were that on a straight stretch a grade of 1.2% would have been sufficient, but liable to choke if overloaded with coarser material (*IC 6358*). See also Table 44.

Rubber belting is a light and long-wearing lining, flexible and easily applied to wooden launders, but unless unfit for other service the cost is high. Special forms of rubber backed by fabric or metal (ARMORITE, LINATEX, VULCALOCK, etc.) are applicable to the lining of chutes, launders, and the like. At U.S.S.R. & M. Co. (Midvale) old 3/8-in. rubber belt used in 10×8-in. launder, sloped 3 3/4 in. per ft., carrying 25 tons per day of heavy <1.0-mm. concentrate in a 1 : 1 pulp lasted 2 yr. Similar belt in a 10×10-in. launder sloped 2 3/4 in. per ft. and carrying 85 t.p.d. of sand-table tailing of the same size in a pulp of 18% solids lasted over 3 yr. See also Table 44.

Slag lining was used at MORENCI (*102 J 644*). The slag castings were channel-shaped sections 12×12×2-in. weighing about 40 lb. each, reinforced with 1- or 1 1/2-in. hexagonal 26- or 28-gage poultry wire. The slag was poured into metal molds standing on end with two pieces of reinforcing wire placed in each side; when the slag had chilled slightly, the molds were removed and the hot castings buried in a sand bed to allow slow solidification of the center and thus avoid shrinkage strains. The cost was not over 12¢ per ft. as compared with $0.90 to $3.00 per ft. for white-iron castings. Their use in the 1,500-ton concentrator showed a saving in liner costs of $6,000 per year over a period of 2 1/2 yr. In a 2-mi. tailing flume the cost in 1912 for cast-iron lining was $7,015 or $0.01397 per ton. In 1914 cast-iron and slag were both used; the combined cost was $1,873.50 or $0.00407 per ton. From Jan. to July, 1915, slag lining cost $498.13 or $0.00197 per ton. In a launder taking roll product to an elevator, cast-iron liners lasted 90 da. compared with 180 da. for slag; cast-iron liners in launders carrying Wilfley-table feed lasted 60 da. while slag liners were still in use after 240 da. In the tailing flume the slag lining had an estimated life of 6 yr. compared with yearly relining with 2-in. plank. Slag lining in chutes running dry was satisfactory for material up to 5/8-in. Such utilization of slag is a useful outlet for a product ordinarily waste; its use, however, is limited to plants where slag is readily available. See also Table 44.

Sheet iron or steel, old boiler plate and discarded crusher steel and similar material are frequently used for launder linings. Table 46 shows the life of sheet-steel liners under various conditions. See also Table 44.

Table 46. Life of sheet-steel liners

Maximum size of material, mm.	Per cent. solids	Thickness of liners, inches	Life in days	Life in tons of solid transported per inch of width	Grade, inches per foot
13	Dry	1/4	120	3,840	4 1/4
7.0	33	1/4	700	26,600	2 1/2
7.0	40	3/8	350	33,250	5
6.0	0.4	3/8	450	22,500	1/4
5.0	.....	1/4	180	5,220	2
5.0	10	12 gage (about 1/10 in.)	700	31,892	2
1.3	33	1/4	400	6,000	3
0.8	33	1/4	700	1,400	3 3/4
0.18	5	12 gage (about 1/10 in.)	1,050	17,650	5/16

Cast-iron liners are usually made in short channel-shaped sections. The useful life of such lining is shown in Tables 44 and 47.

The life of 5/8-in. cast-iron liners at FEDERAL LEAD CO., Flat River, Mo., in launders ranging from 6 in. to 13 in. in width and carrying different materials, was from 8 to 10 mo.

Table 47. Life of cast-iron liners

Maximum size of material, mm.	Per cent. solids	Thickness of liner, inches	Life in days	Life in tons of solid transported per inch of width	Grade of launder, inches per foot
15	50	1 3/4	90	5,130	2 3/4
12	25	5/8	180	10,800	2
7	20	1/2	360	16,000	4
2	42	1	365	9,125	1.67

Concrete lining is readily made in convenient lengths and sizes and makes a very satisfactory and cheap lining.

At CONSOLIDATED MAIN REEF mill (*19 JCM 77*) U-shaped sections of concrete lining were cast in 18-in. lengths, 9 in. deep and 11 1/2 or 13 1/2-in. outside widths. The thickness at the bottom was 2 to 2 1/4 in., tapering to 1 in. on the sides at the top. The average weight of an 18-in. length was 75 lb. Bend blocks for the turns were made of the same cross-section. Concrete slabs, 2 1/2 in. thick and of various lengths, were also used. The mixture was one part quartzite waste crushed to 1/2-in., one part of the <1/4-in. fine material from the above crushing, 1 part of washed drift sand, and 1 part of Portland cement. After concrete was poured into the molds it was allowed to set for 2 da., then submerged in water for 6 or 7 da., when it was ready for use. The joints between lengths were sealed with quick-setting magnesia cement or with mill blanketing. COST for U-shaped blocks, including labor, material, and installation, was about $0.40 per running foot, which was little more than the cost of 1-in. pitch pine with 3×3-in. fillets and much less than the cost of lining with belting. Except at bends the concrete had a very long life (see Tables 48 and 49).

Table 48. Round-bottom concrete lining at Chino Copper Co.

Maximum size of material, mm.	Size of launder, width ×depth, inches	Solids, per cent.	Thickness of liner, inches	Life, in days	Life in tons of solid transported per inch of width	Grade, inches per foot
19	13 1/2×11 3/4	80	1 1/2	270 to 365	51,770	3 3/4
3	15 1/2×13 1/2	40	1	180 to 300	37,200	2

Table 49. Life of concrete launder lining (*19 JCM 77*)

Description	Slope, per cent.	Screenings, grade of pulp			Life
		>60-m.	>90-m.	< 90-m.	
Mill launders, U-blocks	7 1/2	53.55	11.38	35.07	3 yr.+
Wide launders, pulp from pump discharge to tube-mill cones, slabs	9 1/2	53.55	11.38	35.07	3 yr.+
Wide launders, pulp from pump discharge to tube-mill cones, U-blocks	9 1/2	.....	.....	.....	.....
Overflow launders from tube-mill diaphragm cones, U-blocks	18	9.6	22.4	68.0	2 1/2 yr.
Overflow launders from tube-mill diaphragm cones, bends	18	9.6	22.4	68.0	4 mo.
Leaving amalgam tables, U-blocks	6	14.2	34.4	51.4	4 yr.+
Return-classifier cones to mill-pulp elevating pumps, U-blocks	8 1/2	56.8	26.8	16.4	2 1/2 yr.+
Launder under return-classifier cone discharge, U-blocks	10	56.8	26.8	16.4	5 mo.

Steel bars set in concrete (*19 JCM 77*). Discarded Osborn-liner bars in 7-ft. lengths were set on edge and laid in cement on the bottom and sides of a 14×12-in. launder having triangular wooden fillets nailed in the corners. The lining was from 5/8 in. to 1 in. thick and could be placed and dried for use within 9 hr. Quick drying was accomplished by slowly burning old bags soaked in kerosene on top of the cement lining. Slope was 8.5%; pulp was 74 to 61% >60-m., 14 to 20% >90-m., and 12 to 19% <90-m. Life was 4 1/2 yr., except at points of division and at the feed intake, where replacement was made at the end of 2 yr. A launder similarly lined carrying stamp-mill discharge showed little wear after 2 yr. The cost of lining 100 ft. of a 12×14-in. launder and using 3,600 lb. of discarded steel was estimated at $19.50 for labor and material; this was about one-seventh of the cost of new belt lining, which was estimated to last only 6 mo.

Glass is sometimes used in launders carrying fine material. The smooth surface reduces frictional resistance so that a flatter slope than otherwise can be used. Wear is long but the glass tends to crack. At the HILLSIDE fluorspar mill (*IC 6621*) most of the wooden launders are lined with chilled cast-iron, but a few of the wider ones are lined with wire-reinforced plate glass 3/8 in. thick, cut to measure by the manufacturer; the slight waviness of the surface is no detriment. This glass is cheaper than cast-iron and lasts longer. A launder carrying fluorspar concentrates (sp. gr., 3.2) sized between 5/8-in. and 30-m., with 30 parts of water, has a slope of 2 in. per ft.

Resistance of different lining materials to flow. Schmitt (*2 RMP*) says that cement, wood, and rubber belt give practically the same resistance and that canvas belt decreases velocity.

Browning (*29 M & M 900*) found that a given flow of water carried more angular tailing and pyrite on flat slopes in linoleum-lined and wood launders than in glass-lined ones. The capacity for rounded gravel was greater in every case in the glass-lined launder, probably owing to absence of eddy currents and ease of rolling the rounded particles on the glass surface. In general, high velocities cause increased wear on lining.

Splitting the stream cannot be done satisfactorily by taking the laterals off directly; the best method is to use vanes to split into parallel streams and subsequently lead the streams apart. Linke (*loc. cit.*) describes two methods practiced at UTAH COPPER CO., one discharging over weirs, the other through bushed orifices. In both cases the essential feature is a box to receive flow from the main launder, supplied with a cross-baffle under which the pulp has to pass before discharging through the two or more outlets; the latter must all be parallel with the incoming launder. The top of the baffle should be far enough below the upper edge of the box to prevent overflowing of the latter in case of choking beneath the baffle.

Pipe launders. Pipes running partially full are sometimes used as launders. Ordinary IRON PIPE is most common, but WOOD-STAVE and VITRIFIED CLAY pipe are also used. Large-sized iron pipes are sometimes lined with wood; when worn, a new surface is presented by turning the pipe. Rubber-lined pipe has proved an efficient means of conveying mill tailing to mine stopes, and should be equally serviceable inside a concentrator.

At GUANAJUATO (*95 P 78*) 8-in. pipe was used for transporting <30-m., sharp, granular quartz-calcite tailing 5,440 ft. The pipe was 5/8-in. thick; bell-and-spigot joints were calked with tarred hemp rope loosely driven; the outside was asphalted for protection against rust; curves were mostly 14-ft. radius; slope was 3 1/2% for the first 800 ft. and 2 1/4% for the remainder. The pulp was reduced to 25% solids before entering the pipe; occasional increase in thickness caused some deposition of sand; delays due to clogging totaled 4 hr. in 13 mo. At full mill capacity, 250 t.p.d, the pulp ran 1 3/4 in. deep, and traversed the pipe in 12 min., equivalent to 7.5 f.p.s. The pipe could carry 1,000 t.p.d. No appreciable wear was noticed after 13 mo. (100,000 tons transported) and the life was estimated at 50 yr. At about 500 tons per 24 hr. with 5 : 1 dilution the pipe ran a little less than half full (*95 P 457*). A 12-in. pipe running partially full carried sandy tailing at HOMESTAKE (*22 IMM 87*). Joints were made with a loose sleeve coupling held in place by wedges, which permitted turning without shutting down; pipes were turned 120°, so that three different wears were obtained from the same length of pipe by turning twice. At the HILLSIDE fluorspar mill (*IC 6621*) a 3-in. pipe 70 ft. long, suspended by hangers to give a total drop of 18 in. (1/4 in. per ft.), and oscillated by a table head-motion at its upper end, conveys 5/8-in. ~ 8-m. galena concentrates from Richards jigs.

At CLIMAX, tailing up to 15,500 t.p.d. is discharged to a pond 2 1/2 mi. distant and 500 ft. lower through two roughly parallel lines of 18-in., machine-banded Douglas-fir stave pipe, either of which can carry the whole volume (*153 A 588*). The unthickened pulp (49 to 65% water) may contain grains as coarse as 20-m., with 55 to 80% <100-m.; the solid is silicified granite, highly abrasive. Preliminary tests indicated 1.2% grade as the maximum necessary Since the natural ruling grade would have been 3% for the longer (16,700-ft.) and 3.3% for the shorter (15,200-ft.) line, producing destructively high velocities, the lines were laid in sections, some horizontal and others rarely exceeding 0.3%, connected

Table 50. Data on tailing pipe lines at Climax

Cu. ft. pulp per min.	Solids, %	Dry tons per 24 hr.	Per cent. <100-m.	Total hydraulic gradient, %	Velocity, f.p.m. *b*	Available area of pipe, % *a*
412	34.3	7,890	80.0	0.695	304	77
402	39.4	9,480	74.4	0.735	310	76
406	41.4	10,340	68.7	0.763	304	76
404	44.0	11,080	65.2	0.781	304	75
409	49.4	12,920	59.2	0.895	304	76
405	51.1	13,740	56.6	0.920	310	74
206	34.3	3,945	80.0	0.632	262	46
201	39.4	4,740	74.4	0.695	262	44
203	41.4	5,170	68.7	0.763	253	45
202	44.0	5,540	65.2	0.825	260	42
205	49.4	6,460	59.2	0.905	258	44
202	51.1	6,870	56.6	1.000	262	44

a Unobstructed by sediment; calculated from volume and velocity.
b Directly observed, by salt method.

by vertical, open penstocks 4 × 5 ft. in area and of such height as to impose a mean hydraulic gradient of 1.5% on each succeeding section. The longest section, 3,094 ft., at 0.3% grade, has a head penstock 42 ft. high, affording a total head of 51.3 ft., or about 5 ft. more than necessary. The penstocks usually are about half full, the depth at a given moment being self-adjusted to produce the required rate of flow. The reduced velocity thus secured allows coarser grains to collect on the bottom of the pipe, thereby saving wear; the depth adjusts itself to the volume and fineness of the pulp. In one short section where a sustained grade of 1.6% was unavoidable, wear is many times more rapid than elsewhere in the line. Table 50 gives same test data on the performance of a 1,900-ft. section on 0.3% grade fed by a penstock 25 ft. high.

17. CENTRIFUGAL PUMPS

Single-stage centrifugal pumps are limited, in general, to lifts under 50 ft., but in several instances these pumps work against heads of 60 to 80 ft. MULTI-STAGE PUMPS may be used for larger lifts. Lifts greater than 50 ft. are rarely encountered in handling mill pulps, so that few multi-stage centrifugal pumps are found in mill work. The open-runner single inlet volute pump has been most used, but enclosed impellers, as shown in Figs. 90 and 92, are now common features in many types of sand pump. Material enters through a pipe at one side, fed either by suction or by gravity, and is delivered to the center of the revolving impeller, whence it is thrown by centrifugal force imparted by the blades to the periphery of the pump chamber and is discharged through a (usually) vertical pipe. Pressure to lift the fluid is obtained by the conversion of a large part of the velocity head produced by the impeller to pressure head. The direction of motion of the fluid at the instant it leaves the impeller is the resultant of motions tangential to the periphery of the impeller and to the surface of the impeller blade. The volute chamber is designed so that the cross-sectional area increases gradually toward the discharge pipe, and the change from velocity head to pressure head thus takes place with the smallest possible loss. The head which the pump must develop equals the difference in head between the intake and discharge levels, plus the velocity head required to give motion to the fluid, plus losses in the pump and losses due to friction in the pipe lines. The shape and curvature of the impeller blades are important considerations in design for any given service. Fig. 91 (*A*) shows characteristics of a single-stage centrifugal pump operating

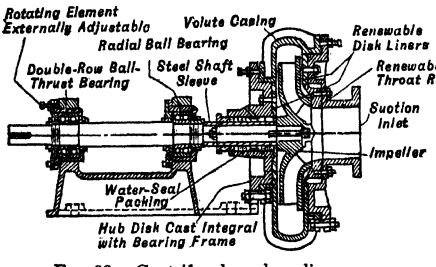

FIG. 90. Centrifugal sand or slime pump (*Morris Machine Works*).

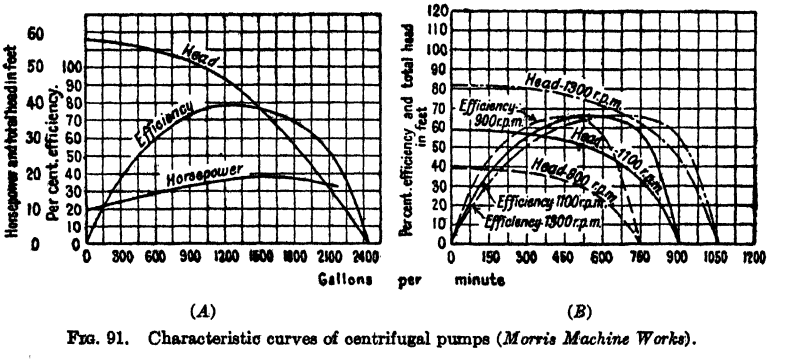

(*A*) (*B*)

FIG. 91. Characteristic curves of centrifugal pumps (*Morris Machine Works*).

at constant speed. Fig. 91 (*B*) shows the effect of change in speed. The general shape of the curves is the same for all speeds; it is determined by the design of the pump and especially the inclination and position of the vanes of the impeller. The curves for any given pump indicate the variations that occur with changes in operating conditions. The SIZE of a centrifugal pump is usually designated by the size of the discharge pipe. Table 51 gives sizes of pumps made by one manufacturer, together with operating data

corresponding to points of maximum efficiency; Table 52 gives the sizes, speeds, and power provision recommended by the same manufacturer to afford the most economical service at various heads and capacities.

Table 51. Capacity, speed, and power of side-inlet centrifugal pumps, at points of maximum efficiency (*Morris Machine Works*)

Pump size, or outlet diam., in.	Inlet diam., in.	R.p.m.	Total head, ft. *b*	Gal. per min.	Brake hp.	R.p.m.	Total head, ft. *b*	Gal. per min.	Brake hp.	R.p.m.	Total head, ft. *b*	Gal. per min.	Brake hp.
1 *a*	1 1/2	1,160	21	20	0.4	1,450	34	25	0.9	1,750	50	30	1.5
1 1/2 *a*	2	1,160	32	45	0.8	1,450	51	55	1.6	1,750	75	65	2.7
2 *a*	2 1/2	1,160	50	80	1.9	1,450	80	100	3.8	1,750	115	120	6.4
3	4	690	28	160	1.9	870	45	200	3.9	1,160	80	270	9.1
4	5	690	28	285	3.2	870	43	360	6.2	1,160	80	480	15.5
6	8	690	30	675	8.0	870	45	800	14.0	1,160	80	1,100	33.0
8	10	690	30	1,150	12.0	870	44	1,400	22.0	1,160	80	1,900	53.0
10	12	690	30	1,800	19.0	870	44	2,200	33.0	1,160	80	3,000	80.0
12	14	580	46	2,900	43.0	690	66	3,500	73.0	870	100	4,200	133.0
15	18	385	44	4,400	60.0	495	72	5,500	122.0	580	100	6,600	204.0
18	20	385	45	6,300	87.0	495	71	8,000	173.0	580	100	9,500	290.0
20	22	385	48	8,000	116.0	495	78	10,000	235.0	580	110	11,800	390.0

a Open-type impellers; all others enclosed-type.
b Lift plus suction plus hydraulic friction.

Impellers may have 4, 6, or more blades; the shells may enclose replaceable liners or the shell itself may be designed to take the wear. Impellers and liners are generally made of white cast-iron or manganese steel. For special work with hot, acid, or corrosive liquids, brass, hard lead, high-silicon irons, rubber, or other resistant materials are used. Rubber liners and rubber-cased impellers are standard features in many modern pumps designed for abrasive pulps. The greatest wear is on the impellers and liners; it varies with the size of particles in the pulp, hardness of the ore, shape of pieces, and with the dilution; coarse material causes greater wear than fine; very dilute and very thick pulps wear less than those of intermediate density. Table 55 records the life of wearing parts, together with other operating data, at a few installations selected as typical of many others. Where pumps are required to run continuously, duplicate units are either installed, ready for instant use, or are held in readiness for a quick substitution.

Feed may be either suction or gravity; the latter is better, especially for the handling of bulky flotation froths. With suction feed, the pump must be primed when starting. Priming is best done by introducing water into the discharge pipe just above the level of the top of the pump; the water should be supplied through a separate water line with a valve. A tee in the discharge line with nipple, elbow, and removable plug furnishes manual means of priming. Steam ejectors or rotary vacuum pumps are sometimes provided for priming large pumps. Priming is complete and the pump ready to work when the suction line and the pump itself are completely filled with water. A petcock let into the top of the pump allows the escape of any air which may be pocketed there during priming or accumulates during running. The SUCTION PIPE is usually one or two sizes larger than the discharge pipe and should be as straight and free from bends as possible. Bends should be of long radius to decrease friction losses. FOOT VALVES and STRAINERS are usually provided on the suction pipe; the free area through these should be about twice the inside cross-sectional area of the pipe. All joints in the suction pipe should be made carefully to prevent leakage of air, which would reduce or destroy suction.

At CONSOL. MIN. & SM. CO. a Wilfley sand pump, transferring galena flotation concentrates to a dewaterer, was adversely affected by excessive accumulations of froth in the sump (*159 #5 J 54*). A water-spray with weighted valve controlled by a float in the sump automatically corrected this condition.

Stuffing box. Leakage of air into the pump or leakage of fluid from the pump where the shaft passes through the shell is prevented by a stuffing box and gland. Water at a pressure slightly higher than that developed by the pump (about 1 lb. for every ft. of lift) is forced into the bearing through a small hole tapped in the top and connected to the water line; this keeps gritty or acid material from getting into the bearing and also aids in keeping the packing in the stuffing box from hardening and cutting the shaft. Square flax PACKING treated liberally with oil and graphite and cut in rings to go just once around the shaft is used in the stuffing box. The GLAND should be made just tight enough so that 5 or 10 drops of water per min. leak out; excessive tightening causes heating and wear on the shaft with loss of power. Water-lubricated rubber has been used satisfactorily both in glands and in bearings of pumps exposed to particularly severe abrasion. See also descriptions of special sand pumps, Figs. 92 and 93.

Table 52. Side-inlet, single-stage centrifugal pumps recommended for various heads and capacities (*Morris Machine Works*)

Gal. per min.		Total head, ft.; lift plus suction plus hydraulic friction									
		20	30	40	50	60	70	80	90	100	120
20	Pump, in..	1	1	1	1	1	1 1/2	1 1/2	1 1/2	1 1/2	1 1/2
	R.p.m.....	1,120	1,320	1,500	1,640	1,760	1,500	1,610	1,700	1,800	1,950
	Hp.....	0.4	0.6	0.8	1.0	1.3	1.2	1.3	1.5	1.7	2.6
30	Pump, in..	1 1/2	1	1	1	1 1/2	1 1/2	1 1/2	1 1/2	1 1/2	1 1/2
	R.p.m.....	900	1,455	1,600	1,750	1,425	1,530	1,620	1,720	1,800	1,975
	Hp.....	0.4	1.0	1.2	1.5	1.2	1.3	1.6	1.9	2.2	2.9
40	Pump, in..	1 1/2	1 1/2	1 1/2	1 1/2	1 1/2	1 1/2	1 1/2	1 1/2	1 1/2	1 1/2
	R.p.m.....	950	1,100	1,240	1,360	1,460	1,560	1,650	1,750	1,850	2,000
	Hp.....	0.5	0.7	0.9	1.1	1.4	1.7	1.9	2.3	2.6	3.2
50	Pump, in..	1 1/2	1 1/2	1 1/2	1 1/2	1 1/2	1 1/2	1 1/2	1 1/2	1 1/2	1 1/2
	R.p.m.....	1,000	1,160	1,300	1,410	1,525	1,615	1,710	1,800	1,900	2,040
	Hp.....	0.6	0.9	1.1	1.4	1.7	2.0	2.3	2.7	3.0	3.7
75	Pump, in..	2	2	2	1 1/2	1 1/2	1 1/2	1 1/2	1 1/2	1 1/2	1 1/2
	R.p.m.....	850	950	1,050	1,600	1,700	1,760	1,820	1,930	2,000	2,150
	Hp.....	0.8	1.2	1.5	2.3	2.7	3.0	3.4	3.9	4.4	5.1
100	Pump, in..	3	3	2	2	2	2	2	2	2	2
	R.p.m.....	540	640	1,150	1,250	1,340	1,390	1,450	1,540	1,600	1,710
	Hp.....	0.9	1.4	2.2	2.6	3.0	3.4	3.8	4.2	4.6	5.5
125	Pump, in..	3	3	3	3	2	2	2	2	2	2
	R.p.m.	570	655	740	830	1,450	1,500	1,560	1,640	1,700	1,800
	Hp.....	1.0	1.6	2.2	2.9	4.0	4.5	4.9	5.3	5.7	7.0
150	Pump, in..	3	3	3	3	3	3	3	3	3	3
	R.p.m.....	590	680	775	850	930	1,000	1,050	1,100	1,160	1,270
	Hp.....	1.3	2.0	2.7	3.4	4.1	4.9	5.7	6.5	7.5	9.5
200	Pump, in.	3	3	3	3	3	3	3	3	3	3
	R.p.m.....	625	740	830	905	960	1,030	1,085	1,140	1,190	1,300
	Hp.....	1.9	2.7	3.5	4.3	5.1	6.0	6.9	8.0	9.0	11.5
250	Pump, in..	4	4	3	3	3	3	3	3	3	3
	R.p.m.....	580	685	900	955	1,020	1,075	1,130	1,180	1,230	1,350
	Hp.....	2.0	3.0	4.4	5.4	6.4	7.4	8.4	9.5	10.6	13.5
300	Pump, in..	4	4	4	3	3	3	3	3	3	3
	R.p.m.....	640	715	790	1,020	1,080	1,125	1,190	1,240	1,290	1,400
	Hp.....	2.5	3.7	5.0	6.9	7.9	9.0	10.2	11.4	12.6	15.5
400	Pump, in..	6	4	4	4	4	4	4	4	4	4
	R.p.m.....	530	785	860	930	995	1,050	1,110	1,160	1,210	1,320
	Hp.....	3.4	5.1	6.5	8.0	9.5	11.0	12.4	13.9	15.3	20.0
500	Pump, in..	6	6	4	4	4	4	4	4	4	4
	R.p.m.....	570	650	950	1,010	1,060	1,110	1,170	1,215	1,250	1,360
	Hp.....	4.2	6.1	9.1	10.8	12.4	14.1	15.8	17.5	19.1	24.5
600	Pump, in..	6	6	6	6	4	4	4	4	4	4
	R.p.m.....	600	675	750	815	1,150	1,205	1,245	1,280	1,320	1,420
	Hp.....	4.6	7.0	9.4	12.0	16.5	18.0	20.0	22.0	24.5	29.0
800	Pump, in..	6	6	6	6	6	6	6	6	6	6
	R.p.m.....	685	750	820	880	945	995	1,050	1,090	1,145	1,240
	Hp.	7.0	9.5	12.5	15.0	18.0	21.0	24.5	28.0	31.5	40.0
1,000	Pump, in..	8	6	6	6	6	6	6	6	6	6
	R.p.m.....	610	860	915	970	1,020	1,065	1,110	1,150	1,190	1,290
	Hp.....	7.0	12.5	16.0	19.0	22.5	26.5	30.0	34.5	39.0	47.0
1,250	Pump, in..	8	8	6	6	6	6	6	6	6	6
	R.p.m.....	650	725	1,050	1,090	1,135	1,175	1,220	1,260	1,300	1,375
	Hp.....	9.0	13.0	22.0	26.0	30.0	34.0	38.0	42.5	47.5	57.0
1,500	Pump, in..	8	8	8	8	6	6	6	6	6	6
	R.p.m.....	730	795	855	910	1,255	1,300	1,330	1,370	1,410	1,450
	Hp.....	12.0	16.5	21.5	27.0	39.0	44.0	49.0	54.0	59.0	69.0
2,000	Pump, in..	10	10	8	8	8	8	8	8	8	8
	R.p.m.....	655	725	1,005	1,050	1,090	1,135	1,175	1,220	1,260	1,340
	Hp.....	14.0	20.5	31.5	38.0	44.0	50.0	56.5	63.0	70.0	87.0
2,500	Pump, in..	10	10	10	10	8	8	8	8	8	8
	R.p.m.....	760	825	880	1,180	1,220	1,265	1,315	1,345	1,385	1,450
	Hp.....	20.5	27.0	35.0	51.0	61.0	68.0	74.0	82.0	90.0	107.0

Suction lift. Table 53 gives the approximate theoretical maximum suction lifts in ft. at 60° F. for various altitudes and fluid densities; actual lifts ordinarily will not exceed

Table 53. Approximate theoretical suction lifts at 60° F. (*17 CME 629*)

Altitude above sea level, ft.	Specific gravity of fluid							
	1.0	1.1	1.2	1.3	1.4	1.5	1.6	1.7
	Maximum suction lift, ft.							
Sea level	34	31	28	26	24	23	21	20
1,000	33	30	27	25	23	22	21	19
2,000	32	29	26	24	22	21	20	18
3,000	31	28	25	23	22	20	19	18
4,000	29	27	24	23	21	20	18	17
5,000	28	26	23	22	20	19	18	17
6,000	27	25	22	21	19	18	17	16
7,000	26	24	21	20	19	17	17	16
8,000	25	23	21	19	18	16	16	15
9,000	24	22	20	18	17	16	16	14
10,000	23	21	19	18	17	16	15	14

one-half the theoretical. Increase in temperature reduces the maximum suction lift, owing to increased liberation of vapor at higher temperatures. Table 54 shows the effect on suction lift with increase in temperature; very hot fluids should be fed by gravity.

Discharge pipe layout should be carefully made; a level run may cause clogging; bends should be as few as practicable and of long radius; valves should not be placed in pulp lines, since closing may cause solid material to pack so that the line will not clear again when the valve is reopened; stopping the pump may cause similar trouble. Provision of a by-pass to be opened just before stopping the pump will clear the pipe; shutting off the pulp supply and substituting clear water before shutting down is also effective. The by-pass is the best arrangement, as the pipes can then be drained immediately, if the pump stops accidentally.

Velocities of 350 f.p.m. in discharge pipes and 200 f.p.m. in suction pipes will, in general, prove satisfactory.

Table 54. Effect of temperature on suction lift (*17 CME 629*)

Degrees F.	Approximate theoretical maximum suction lifts at sea level, feet
60	34
80	33
100	32
120	30
140	27
160	23
180	16
200	8

Size of feed. Centrifugal pumps successfully handle pulps containing coarse particles. They are frequently used to elevate pulps containing up to 1/4-in. particles; large pumps used in hydraulicking operations successfully handle gravels containing fair-sized rocks.

A 12×24-in. pump in one mill was reported as handling 600 tons per 24 hr. of 1 1/4-in. ~ 20-m. material together with 4,500 g.p.m. of water.

Efficiency of well-designed pumps doing good work will range from about 50% for the smaller sizes to about 75% for large sizes. These efficiencies are not always attained in practice as the pumps may not be working under the most favorable conditions. In handling pulps, the high velocity attained keeps the solid material in suspension. Possibly undesirable dilution of certain pulps by the water admitted to the gland may make some other means of elevation advisable.

Performance. See Table 55. The highest proportion of lost time reported (Q) for 96 pumps was 2.5%; some large mills reported less than 1%, and many operated with negligible or no time lost by reason of pump failure, avoided usually by the installation of a duplicate. Repairs and renewals were the main causes of delay, though one group of large mills had some trouble with choking. About equal numbers of pumps were fed by gravity and by suction.

Rubber-lined centrifugal sand pumps of different types and sizes have been applied to a considerable variety of operating conditions by HOLLINGER (*42 CMI 50*) with the results shown in Table 56. The outstanding conclusion is that the highest mechanical efficiency (attained when operating close to maximum capacity) usually entails the largest expense for replacement of linings; hence the two factors must be considered together for arriving at the most economical conditions. Further conclusions: (*a*) Deterioration of a rubber-covered impeller is much more rapid than that of the case linings; in most of the Hollinger pumps, white-iron impellers were retained. (*b*) Wear is greatly accelerated by overloading and by unnecessarily high speeds; also by presence of angular metal fragments; coarse ore, if hard and sharp, is more destructive than fine. (*c*) Wear even on an uncovered impeller is diminished by rubber-lining of the case, owing probably to the better streamlined flow obtainable in the absence of pits, such as inevitably develop on metal liners. Several of the Hollinger pumps were manufactured on the premises. They were rectangular in section, flat plates forming both sides, had a square outlet, and

Table 55. Performances of centrifugal sand and slime pumps (*Q*)

Plant	Make	Outlet diam., in.	Tons solids per 24 hr.	Size of solids	Water, %	Vert. lift, ft.	Drive	Speed, r.p.m.	Horsepower		Life, days		Theoret. efficiency, % *k*
									i	*c*	Case	Impeller	
Bunker Hill & Sullivan	W	4	1,361	<10-m., 19% <200-m.	49	35	D	1,160	25	15 1/2	30	7	25.3
	W	3	210	<65-m. 72% <200-m.	75	28	D	1,160	15	8 1/2	90	30	11.6
Mine la Motte	.....	5	800	<20-m.	75	40	D	860	50	50	30	12	10.8
Desloge	.....	5	1,400	<0.12-in.	85	50 *g*	D	1,160	100	90	180	85	.....
	.....	8	2,000	Slime	75	20	D	1,160	100	75	250	130	9.0
	.....	6	1,400	<0.12-in.	85	50 *g*	D	1,160	100	100	60	33	.....
Leadwood	.....	6	2,300	B-m. prod.	65	48	D	860	35	32	41	31	41.5
	.....	8	4,600	<0.12-in.	70	45	D	690	150	150	150	150	19.3
Bonne Terre	.....	3	250	<8-m. *a*	35	28	D	860	10	9	300	150	5.0
	.....	6	2,300	<8-m. *a*	35	50	D	1,160	75	70	150	60	10.6
Cons. M. & S. of Canada	L	8	9,700	20% >100-m.	35	41	D	720	150	133	50	23	19.3
	W	6	1,000	95% <200-m.	50	27	D	900	50	50	170	190	4.5
Tenn. Copper Co.	W	2	80	<100-m.	25	13	D	1,160	15	4	200	100	1.4
	H	B-frame	1,200	<20-m.	50	15	T	745	5	5 1/2	600	200	27.5
Nev. Consol., Chino	H	5	500	97% <200-m.	50	20	V	1,000	20	16	.....	.....	5.2
	K	2	500	97% <200-m.	50	33	V	1,700	10	8	20	40	17.3
Nev. Consol., McGill	W	6	4,838	<10, 30% <200-m.	56	30	D	835	40	38	90	24	36.5
	W	4	260±	6% >100-m.	92	60	D	1,200	30	31	213	151	26.5
Nev. Consol., Ray	W	8	3,000	<100-m.	70	45	D	.....	100	65	80	58	29.1
Phelps Dodge, Ajo	W	8	6,300	Flot. tailing	60	50	D	865	100	85	156	52	39.0
	W	6	1,092	Flot. conc.	82	75	D	1,160	75	64	156	52	30.0
Britannia	W	6	1,000	20% >200-m.	65–70	30	B	880	20	12	26	60	32.4
	A-C	6	400	25% >200-m.	70	30	T	1,000	15	.....	1 yr. +	6 mo. +	.....

Andes Copper Co.	W	6	156±	<65-m., 85% <200-m.	94	35	B	780	50	.....	6 mo.	3 mo.	.....
	W	6	110± *b*	<48-m., 61% <200-m.	90	68	B	1,050	50	.....	6 mo.	3 mo.	.....
Utah Copper Co., Arthur	L	6	1,200	65% <200-m.	80	71	D	900	75	75	190	20	23.9
Utah Copper Co., Magna *h*	H	12	12,000	Flot. feed	71.5	42	D	600	150	139	Indef.	1 yr.	53.5
San Francisco de Mexico	W	4	600	6.4% >20-m.	40	11.5	D	165	15	11	60	20	4.4
	W	2	200	<20-m.	70	30	D	170	10	7	60	30	12.0
Sunshine Min. Co.	V	4	800	6% >65-m., 64% <200-m.	70	.....	V	792	15	8	200+	200+	.....
	V	4	500		70	.....	V	730	7 1/2	6	500+	500+	.....
Climax Molybdenum Co.	W	6	1,500	.....	50-60	20	D	700	.....	11	60	40	25.5
	W	4	1,500	.....	50-60	20	D	900	20	18	60	40	15.5
Roan Antelope	W	6	<7,500	58% <200-m.	50	55	T	1,010	100	55	1,500	450	<63.1
N. J. Zinc Co., Ogdensburg	W	3	300	.....	85	67	V	1,520	20	18	90	90	31.3
N. J. Zinc Co., Franklin	W	4	140	<14-m., 80% <200-m.	95.5	43	B	860	20	.....	1,300	780	.....
	F	3	152	98.5% <200-m.	78.2	75	T	510	20	.....	390	390	.....
	F	3	140	<28-m.	93.5	60	T	1,030	20	15	450	100	36.2
	W	3	116	<28-m.	90	30	T	1,070	10	8 1/4	470	110	15.3
Mt. Lyell Min. & Ry. Co.	W	8	7,224 *d*	<28-m., 30% <200-m.	40	55	.....	850	80	.....	.....	.....	.....
	W	2	194	*e*	28	18.5	.....	960	7	.....	.....	.....	.....
	H	3	108	*f*	.....	19	.....	1,100	5	.....	.....	.....	.....
	W	3	753	*j*	.....	28	.....	1,218	15	.....	.....	.....	.....
	H	2	403	*f*	.....	24	.....	1,237	10	.....	.....	.....	.....
	H	2	188	*f*	.....	24	.....	1,066	7 1/2	.....	.....	.....	.....

a With 30 to 60% slime. *d* Has pumped 8,960 tons in 24 hr. *g* Pounds gage pressure. *j* Thickened flotation tails.
b Concentrate. *e* Thickened flotation concentrate. *h* Three such pumps in parallel. *k* Based on tonnage and lift of pulp against consumed power, *i.e.*, charging all losses to the pump.
c Power consumed. *f* Unthickened flotation froth. *i* Installed power.

A-C, Allis-Chalmers; B, Belt. D = Direct-connected drive; should not be used where there is danger of flooding. F, Ferris; H, Hydroseal; K, Krogh; L, Local; T, Tex-rope; V, V-belt; W, Wilfley.

Table 56. Centrifugal sand pumps at Hollinger (*42 CMI 50*)

Material (sized as in Table 56*a*)	Type of pump *g*		Gal. per min.	R.p.m.	Head, ft.	Effic., % *f*	Cost per day			Power, hp.	Life, days			
	Size	Lining					Repairs	Power	Total		Shell liner	Disk	Impeller	Seals
Concentrate classifier feed, sp. gr., 1.52 *h*	6-in.	Metal	690	832	74	32	$4.04	$3.00	$7.04	37.5	11	13	12	.....
	6-in.	Rubber (1)	690	1,130	74	42	5.29	2.46	7.75	30.8	148	10.7 *a*	15	22.5 *a*
	8-in.	Rubber (2)	815	787	74	47.3	1.30	2.57	3.87	32.2	346	.....	340	23
Agitator tailing, sp. gr., 1.54	5-in.	Metal	145	675	68	10	1.36	2.00	3.36	25	90	35 *b*	120	80 *c*
	6-in.	Rubber (1)	145	835	68	13.85	0.83	1.44	2.27	18	285	31	270	180
Classifier overflow, sp. gr., 1.32	8-in.	Metal	1,402	735	70	41	4.39	4.56	8.95	57	21	28.5	21	.....
	8-in.	Rubber (2)	1,402	857	70	53.5	8.07	3.52	11.59	44	73	.....	20	21
	8-in.	Linatex	1,402	735	70	41	1.21	4.56	5.77	57	738	.....	40	.....
Mill tailing, sp. gr., 1.50	8-in.	Metal	1,065	800	72 *i*	26.6	1.78	4.80	6.58	60	100	.....	80 *d*	.....
			1,065	1,056	155	27.9	1.78	9.68	11.46	121	.....	.....	.....	.....
	8-in.	Linatex	1,065	800	72 *i*	26.6	0.37	4.80	5.17	60	1,080	.....	700 *d*	.....
			1,065	1,056	155	27.9	0.37	9.68	10.05	121	.....	.....	.....	.....
Ball-mill circ. load, sp. gr., 1.85	6-in.	Linatex	1,050	510	19	32	3.00	2.08	5.08	26	140 *e*	.....	21	.....

a Side plate. *d* Follower plate. *g* Items correspondingly numbered refer to the same pump differently situated.
b Inner cheek. *e* Before repairing shell at cost of $70. *h* Material to the 8-in. rubber-lined pump had sp. gr. of 1.47.
c Outer cheek. *f* Based on average operating conditions, and power input at motor. *i* Variations due to changes in elevation at point of discharging tailings.

were lined with LINATEX (an acid-vulcanized rubber), the chief advantages of which are its ease of application and of repair; serviceable patches can be applied with cold cement. Provided the customary clearances are maintained, a pump of this shape has about the same efficiency as the conventional type; the inward extension of the suction inlet, found on the usual type, proved unnecessary and was omitted without loss of efficiency in the shop-made pumps.

Table 56*a*. Sizing tests for Table 56 (Cumulative per cent.)

On mesh	Conct. Classif. feed	Agitator tailing	Classifier overflow	Mill tailing	Ball-mill circ. load
4	.....	.....	.....	.....	2.1
6	.....	.....	.....	.....	6.3
8	.....	.....	.....	.....	10.4
10	.....	.....	.....	.....	15.3
14	.....	.....	.....	.....	20.6
20	.....	.....	.....	.....	26.7
28	.....	.....	.....	.....	36.1
35	0.2	0.7	0.7	0.6	50.2
48	0.9	5.8	5.8	4.8	61.9
65	3.3	17.5	16.4	14.6	*a*
100	10.2	27.2	28.9	22.7	.....
150	23.2	36.0	38.9	30.0	.....
200	42.7	42.5	46.7	36.1	.....
<200	57.3	57.5	53.3	63.9	38.1

a All <48-m.

AT NACOZARI, five centrifugal pumps circulated middling from Callow and MacIntosh flotation machines, and four pumps handled general mill tailing (58% <200-m.), the latter operating in two stages (*IC 6358*). All pumps were 4-in. with 18-in. impellers. They were cast locally in white iron from a design which entails no machining; the cost was thus reduced to about 15% that of imported pumps, and justified scrapping for remelting when worn out. For further details see Table 57.

Table 57. Centrifugal pumps at Nacozari (*IC 6358*)

	Middling circuit		Tailing disposal	
	Callow	*MacIntosh*	*Lower*	*Upper*
Pulp: G.p.m.	154	112	852	852
Sp. gr.	1.14	1.15	1.18	1.18
% solids	7.6	13.1	19.1	19.0
Vertical lift, ft.	45.5	35	44.5	21.5
Speed, r.p.m.	690	720	830	630
Power: Installed, hp.	20	10	40	20
Consumed, hp.	9.8	10.2	21.3	12.9
Efficiency, %	25 to 35	30 to 45	45 to 55	45 to 55

At MT. LYELL the restricted area of millsite has led to an unusually large dependence upon pumps, cheap power also contributing. The examples listed in Table 55 are selected from 26 pumps reported (*Q*), of which only 3 are idle spares. In several cases, 2 or 3 pumps operate in parallel, thus insuring uninterrupted service. The Hydroseal pumps have been found particularly adapted to bulky flotation froths when suction lift is unavoidable. All pumps except the 8-in. are rubber-lined. SAN FRANCISCO DE MEXICO is also liberally equipped with centrifugal pumps, about 60 altogether, of which the two examples cited are among the smaller.

Advantages. The centrifugal pump is simple, requires little space, and the attendance while running amounts to only a small portion of a man's time, to determine whether it is functioning properly. It has displaced bucket elevators for sand and slime pumps in the great majority of mills. With gravity feed and a properly designed discharge line it is equally or more dependable than the elevator, and is tremendously more flexible.

Wilfley centrifugal pump (Fig. 92) has a centrifugal seal where the shaft passes out of the pump casing and thus avoids the need of a stuffing box. The success of the centrifugal seal in protecting the bearings from gritty and hot solutions permits the use of ball bearings on the shaft with consequent saving in wear and power. The pump has no suction; feed enters intake *a* thence through a passage to the enclosed-type impeller *c*. The discharge pipe is screwed into the keeper *l*, which is raised or lowered by bolt *m*, when removing the case; the joint between the keeper and the case is made with a ring of square packing. The centrifugal seal consists of a revolving expeller *d* having radiating wings similar to an open runner and a stationary member having a projecting groove *e*. Material leaking

by the edge of the expeller encounters the groove *e* and is directed toward the wings of the expeller which eject it again. When the pump stops, an automatic check valve closes around the shaft, preventing any leakage. Wearing parts are easily and quickly removable by loosening two nuts which hold the shell *f*, when the shell can be swung aside on arm *g*, giving access to the impeller, the follower plate *h*, and expeller. The joint between the follower plate and the frame is made with a ring of square packing *i*, set in a groove in the frame; the joint between the follower plate and the case is made with flat faces and a round rubber gasket *k*, cemented into a groove in the follower plate.

Table 58. Wilfley centrifugal sand pump

Size of pump, in.	Pipe connections, in.		Normal capacity, g.p.m.	Intake head above shaft for normal capacity, ft.	Approximate shipping weight, lb.
	Discharge	Intake			
2	2	4	200	3	660
3	3	5	300	3	900
4	4	6	500	3	1,590
6	6	8	950	3	2,550

Table 59. Speeds of Wilfley centrifugal sand pumps

Size of pump, in.	Standard pulley, in.		Static head plus friction head, ft.								
	Diameter	Face	20	30	40	50	60	70	80	90	100
2	6	6	990	1,130	1,255	1,380	1,500	1,605	1,720	.....	.....
3	8	6	820	935	1,035	1,135	1,230	1,320	1,415	1,500	1,580
4	10	10	.....	745	825	910	985	1,060	1,130	1,195	1,260
6	12	12	.....	.....	725	800	860	905	985	1,035	1,080

This pump has been very successful in handling gritty or sandy materials; several examples are given in Table 55. Tables 58 and 59 give manufacturer's data on capacity and speed of the various sizes.

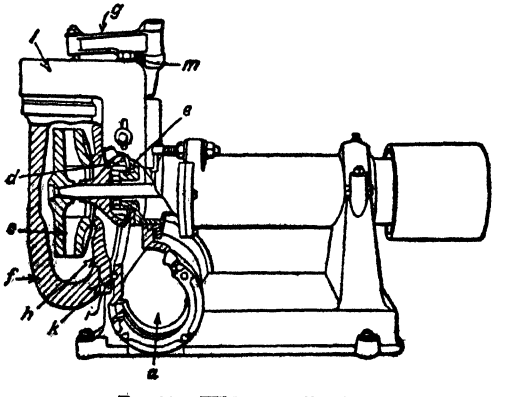

FIG. 92. Wilfley centrifugal pump.

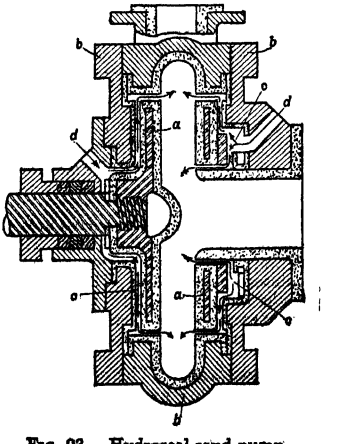

FIG. 93. Hydroseal sand pump (rubber lined).

Hydroseal pump (Fig. 93) has an enclosed-type impeller *a* sufficiently close fitting and water-sealed so that it is capable of maintaining a suction lift up to 20 ft. The impeller is isolated from the sectional casing *b* by channels *c* through which clean water, amounting to 2 to 5% of the delivered volume, is forced at a pressure slightly above that developed by the pump. In the sand and gravel pumps, sealing water enters both sides of the casing through ports *d* and flows around all sides and edges of the impeller as shown; in the slime pump, only the driven side is thus protected. In sand and slime pumps, all surfaces subject to abrasion are protected by molded jackets of soft rubber (shown

stippled). In the gravel pump, only the sides of the casing are protected by rubber, the impeller, shell, and suction sleeve being made of manganese and other alloy-steels. Delivery heads up to 160 ft. of water are attainable; for heavier pulps or higher lifts, two pumps may be placed in tandem, both driven by the same motor Direct-connected, flat-belt, and overhead V-belt drives are all available. Table 60 gives manufacturer's

Table 60. Water capacities of totally rubber-lined Hydroseal pumps, at 50-ft. head (*Allen-Sherman-Hoff Co.*)

"A frame" 2- and 3-in. outlets			"B frame" 4- and 6-in. outlets			"C frame" 6- and 8-in. outlets			"CD frame" 6- and 8-in. outlets			"D frame" 10- and 12-in. outlets		
G.p.m. *a*	R.p.m.	Hp. *c*	G.p.m. *a*	R.p.m.	Hp. *c*	G.p.m. *a*	R.p.m.	Hp. *c*	G.p.m. *a*	R.p.m.	Hp. *c*	G.p.m. *a*	R.p.m.	Hp. *c*
25	1,130	2.3	200	805	4.6	400	655	12.0	800	655	18.0	2,000	490	42
50	1,150	2.7	250	815	5.1	500	660	13.0	1,000	665	20.5	2,500	495	50
75	1,185	3.3	300	825	6.3	600	665	15.0	1,200	675	24.0	3,000	505	57
100	1,215	3.9	350	835	6.5	700	670	16.0	1,400	685	27.5	3,500	515	67
125	1,250	4.7	400	850	7.5	800	675	17.0	1,600	700	31.0	4,000	525	82
150	1,290	5.4	450	865	8.1	900	685	19.0	1,800	710	35.0	4,500	545	97
175	1,330	6.2	500	880	9.1	1,000	695	20.0	2,000	725	39.5	5,000	560	108
200	1,370	6.9	600	925	11.3	1,100	705	22.0	2,200	740	44.0	5,500	580	119
225	1,425	8.0	700	975	14.4	1,200	715	25.0	2,400	755	50.0	6,000	600	136
250	1,470	9.2	800	1,015	16.8	1,300	725	26.0	2,600	770	55.0	.....	.....	.....
275 *b*	1,520	10.4	900	1,065	20.0	1,400	735	27.0	2,800	790	61.0	.....	.....	.....
300 *b*	1,565	11.7	1,000	1,140	25.6	1,500	750	31.0	3,000	810	68.5	.....	.....	.....
325 *b*	1,625	13.5	1,100	1,200	31.0	1,600	765	33.0	3,200	830	76.0	.....	.....	.....
350 *b*	1,690	15.1	1,200 *b*	1,270	37.0	1,700	780	36.0	3,400	850	84.0	.....	.....	.....

a U. S. gallon, 0.1337 cu. ft., or 8.355 lb. of water.
b "Dredge" type, not rubber-lined.
c For a pulp, multiply by its specific gravity.

data applying only to completely rubber-lined sand and slime pumps (except as noted), and to a 50-ft. head of water; for heavier pulps, power is proportional to specific gravity of pulps. The relation of power to head varies with the different pumps, and with the speed and capacity of a given pump.

At Wright-Hargreaves (*140 #4 J 37*) an 8-in. Hydroseal pump lifts 3,600 (dry) tons per 24 hr. to a total height of 55 ft.; the pulp is nearly all <10-m. and 10% >35-m., and contains 50% solids. The pump is driven at 850 r.p.m. by a short V-belt from a 75-hp. motor, consuming 60 hp. Wear of replaceable parts is given in Table 61. See also Table 55.

Table 61. Wear on Hydroseal pump at Wright-Hargreaves

	Life, days	Cost of part	Cost per dry ton pumped
Runner	50	$135.00	0.0750¢
Seal ring	38	4.00	0.0029
Casing liner	270	123.85	0.0127
Suction sleeve	730	27.50	0.0011
Bell liner, driven side	365	23.50	0.0018
Bell liner, suction side	365	22.50	0.0017
			0.0952¢

Vacseal pump (*50 pt. 2, SAMEJ 630*) avoids the necessity for a water-fed or tightly packed gland. The rubber-covered, open-type impeller has vanes on both sides, those facing the gland or driven side (smaller than the others but rotating in a narrower space) being so designed as to maintain a pressure on that side which shall exceed the delivery pressure by an amount never less than the inlet pressure; this forestalls any tendency for sand to move toward the gland, which requires only enough packing to prevent excessive leakage when the pump stops. As wear on these inside vanes is negligible compared with that on the others, this balance cannot be lost through use; neither can it be upset by irregularity in rate of flow. The pump is made in 2- to 6-in. sizes, with capacities of 1,000 to 100,000 g.p.h.; it is not recommended for heads over 90 ft.

18. SPIRAL PUMP

Frenier pump (Fig. 94) consists of a spiral wheel *a* revolving in a box *b* which contains the fluid to be elevated. Material entering the spiral through the opening *c* advances toward the center and is discharged through hollow shaft *d* and the stuffing box and gland connection *e* to discharge pipe *f*. The weighted lever *g* forces the gland packing into tight contact with the outwardly flaring face of the shaft extension. With each revolution of the wheel, fluid is scooped into the spiral and air enters during the remainder of the revolution so that a portion of each succeeding turn of the spiral is filled with the fluid to be

lifted. The lifting force is the sum of the hydrostatic heads in the spiral plus the pressure induced as the fluid enters the spiral, minus the head of liquid in the discharge pipe. The lifting force is thus independent of the speed of revolution; it can be increased only by increasing the number of turns of the spiral or the diameter of the wheel. The makers recommend 20 r.p.m. as the most satisfactory speed. The radial distance between successive turns of the spiral is generally 2 1/2 in. Table 62 shows maximum capacities and lifts for the various standard sizes of pumps.

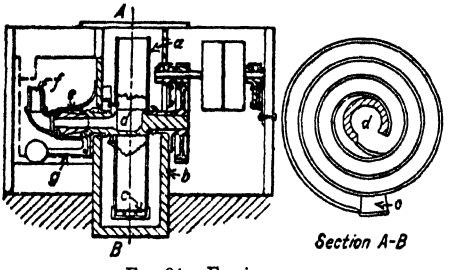

FIG. 94. Frenier pump.

The Frenier pump is suitable for elevating solutions or pulps to heights of 10 or 12 ft. The level of fluid in the FEED box should be 7 in. below the shaft. The pump will not operate satisfactorily under changing conditions. If overloaded, it will stop working; neither does it work well when underfed. The greatest WEAR occurs between the rotating tube at the end of the hollow shaft and at the bend of the discharge pipe. For most efficient operation the discharge pipe should be vertical and have a vertical discharge opening with free fall to allow the escape of air. The construction is simple and little attendance is required.

Table 62. Sizes and capacities of Frenier pumps

Size of wheel, in.		Capacity, g.p.h., maximum	Maximum lift, ft.	Shipping weight, lb.
Thickness	Diameter			
6	44	3,000	12	1,100
6	48	3,200	16	1,200
6	54	3,500	22	1,400
8	44	4,000	12	1,200
8	48	4,200	16	1,300
8	54	4,500	22	1,500
10	44	5,000	12	1,400
10	48	5,200	16	1,500
10	54	5,500	22	1,670

19. DIAPHRAGM PUMP

The elements of this pump (Fig. 95) are a chamber *a*, with suction feed pipe *b* and inlet valve *c* at the bottom, and diaphragm *d* with outlet valve *e* at the top. Diaphragm *d* is reciprocated perpendicularly to its plane by any suitable mechanism. In the form shown (Hardinge Co.) the drive comprises the rocker arm *f* actuated by rod *g* from eccentric *h*, and rod *i* connected to block *j* mounted on the diaphragm. Stroke length (and thus capacity) is adjustable while running by moving block *k* by means of handwheel *l*. The valves may be flat, as shown in Fig. 95, or of ball type, as in Fig. 96, or of any other suitable gravity type. Valve seats are usually of high-grade rubber, and the valves may have rubber molded on the working faces; wear of such a combination is long, and substantial closure occurs even when wood chips get on the seat. Diaphragm is of sheet rubber about 3/8 in. thick, usually lightly reinforced with imbedded duck. Chamber *a* is ordinarily built so that spout *m* can be turned to any quadrant.

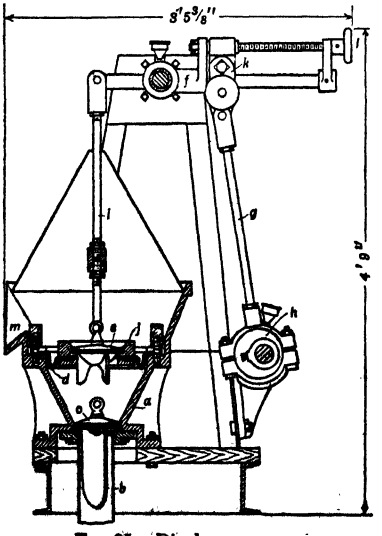

FIG. 95. Diaphragm pump.

To start operation the system is primed with water to fill the suction pipe and chamber *a* to overflow. Thereupon, when the pump is started, valve *e* remains closed on the upstroke, pressure is reduced in *a* below that in *b*, valve *c* is lifted by the excess of liquid pressure beneath, and liquid flows into *a*. On the downstroke the excess volume of liquid in *a* pushes up *e* and flows onto the top of the diaphragm, to be lifted over *m* on the succeeding upstroke.

Height of lift of diaphragm pumps is limited by atmospheric pressure and also by the strength of the diaphragm; lifts should never exceed half the theoretical lifts of Table 54; ordinarily lifts are less than 8 ft. SPEED recommended by most manufacturers is 40 to 60 s.p.m.; higher speeds cause splashing and, with flat valves (Fig. 95), a tendency to throw the valves so high that they stick or leave the

ports entirely; this is particularly likely with thick pulps. STROKE may be lengthened as much as the diaphragm will stand; usual maximum is 1 1/2 in. for the smallest to 4 in. for the largest pumps. Size of pump is designated by the diameter of the suction pipe; standard sizes (not all of which are made by all manufacturers) range from 2- to 6-in. The number of units driven from a common shaft ranges from one to five, but seldom more than three pumps larger than 4-in. are consolidated. CAPACITY may be varied by changing the speed or length of stroke or it may be controlled by admission of small quantities of air into the chamber through a pipe with a needle valve. Table 63 gives one manufacturer's data on simplex pumps (multiple-units in proportion) at 40 r.p.m. and maximum stroke.

The diaphragm pump has found its greatest application in elevating and controlling the underflow from thickeners. It is simple to operate and requires little attendance and repair. Pulps containing as much as 50% solids are easily handled.

At HOLLINGER (*57 A 150*) a No. 4 Goulds diaphragm pump with 3-in. stroke performed as follows:

No. strokes per min.	Vol. per stroke, cu. ft.	Sp. gr. of pulp	Per cent. solids	Tons solids pumped per day	Per cent. increase in speed	Per cent. increase in volume per stroke	Per cent. increase in tonnage
14.5	0.139	1.54	54.5	76.3	.....	.....	.....
23.0	0.148	1.48	50.5	114.5	58.5	6.5	50.0

The life of a diaphragm was more than one year when operating at 14 to 18 s.p.m. while rubber valves and seats showed no perceptible wear in 6 mo.

Diaphragm pressure pump (Fig. 96) is a modification of the diaphragm pump, designed to lift pulp as much as 20 ft. above the pump chamber, while maintaining the usual suction

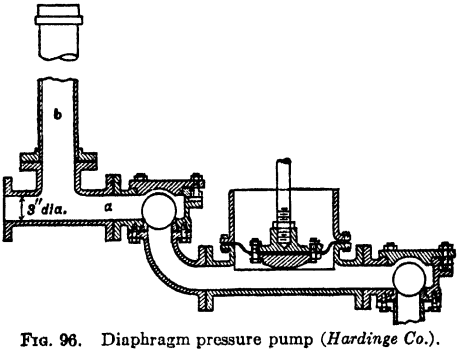

FIG. 96. Diaphragm pressure pump (*Hardinge Co.*).

lift. This is accomplished by enclosing the discharge chamber, *e.g.*, as at *a*. Standpipe *b* provides an air chamber to decrease shock on diaphragm and drive. Another form for lower lifts is shown in duplex type in Fig. 97.

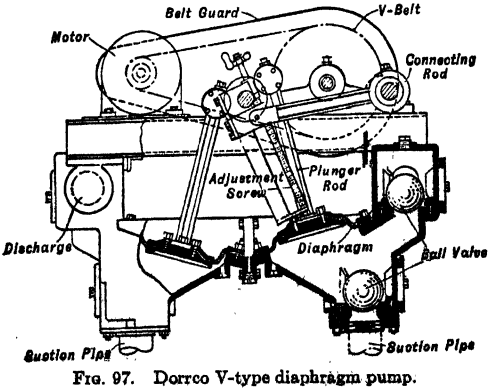

FIG. 97. Dorrco V-type diaphragm pump.

Table 63. Capacity of Simplex (single-unit) diaphragm pumps (*Denver Equipment Co.*)

Size, in.	Stroke, in.	Capacity, cu. ft. per min., at 40 r.p.m. and maximum stroke				Tons solids per 24 hr. @ 2.70 sp. gr.			Recommended motor, hp.
		Water	Per cent. solids in pulp			Per cent. solids in pulp			
			33	50	60	33	50	60	
2	1/2 to 1 5/8	2.42	2.40	1.98	1.62	45	65	69	3/4 to 1
3	5/8 to 2 3/8	4.69	4.66	3.82	3.20	87	125	137	1 1/2 to 2
4	5/8 to 2 3/8	5.98	5.96	4.64	4.01	111	153	172	1 1/2 to 2
5	1 1/2 to 3	18.0	19.0	15.2	12.6	354	500	540	2
6	2 to 4	23.0	24.4	19.4	15.8	453	636	675	3
Cu. ft. of pulp per ton dry solids						77.5	43.8	33.6	.....
Cu. ft. per ton of pulp						25.4	22.0	20.0	.....
Specific gravity of pulp						1.26	1.46	1.60	.....

20. TAILING WHEEL

Tailing wheel (Fig. 98) consists of large rotating wheel with projecting buckets on one or both sides of the rim. When at the bottom the buckets scoop up pulp from a pit and at the top deliver it into a receiving trough or launder. The older wheels were constructed of wood but newer ones are of steel, either rigid or of bicycle-spoke construction. Tailing wheels have been most used on the Witwatersrand to elevate stamp-mill tailing. Wheels up to 60-ft. diameter have been made. The net lift, *i.e.*, the distance between the level of the feed launder and that of the receiving launder, is less than the diameter of the wheel by an amount determined by the inclination of the bucket vanes to the wheel radius. Julian and Smart give the RATIO OF DIAMETER TO NET LIFT as about 1.3 : 1 and recommend an angle of 65° between the radius and the bucket vanes. Usual SPEED is about one-third the critical speed at which centrifugal force would prevent bucket discharge. (See Sec. 5, Art. 2.) The time required for buckets to discharge is given by Wood and Laschinger (*77 J 482*) as not less than 3 sec. on 40-ft. wheels or 5 sec. on 60-ft. wheels. DRIVE may be by belt and pulley mounted on the shaft, or by pinions and gear, or by a sheave built into or around the outside of the wheel itself. Manila-rope drive on sheaves has been most favored.

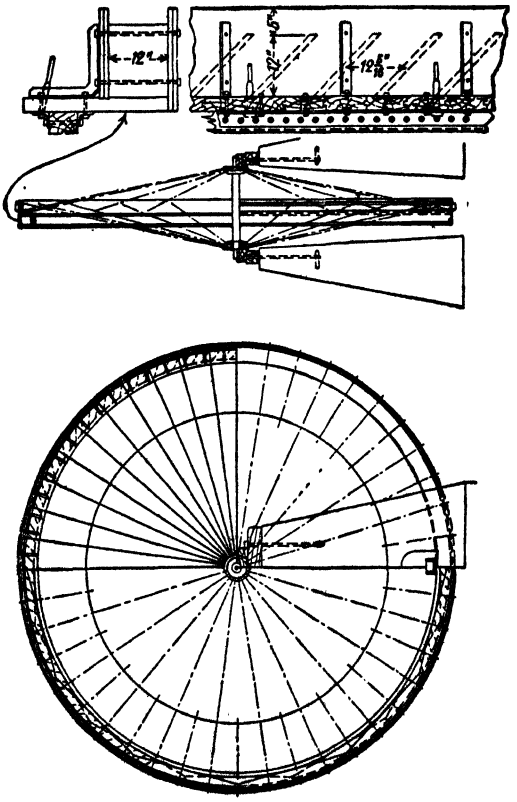

FIG. 98. Tailing wheel.

The first COST of tailing wheels is high; large wheels require heavy construction and massive supports for the shaft bearings. Maintenance and repair costs are low, and reliability and durability are high. POWER EFFICIENCY is usually from 40 to 50%. Centrifugal pumps and bucket elevators cost less, require less space, and are generally more desirable than tailing wheels.

At CALUMET & HECLA conglomerate mill (*IC 6364*) two 50-ft. and one 60-ft. sand wheels are the only important lifting devices in the plant, delivering coarse sands to regrinding, and fines to leaching or flotation. Each wheel has two rows of buckets, made of flat steel plate, on opposite sides of a central rim which is driven by spur gear from a pinion shaft. A separate launder feeds each row of buckets; at the top, these discharge into a launder on each side, the two launders uniting as soon as they clear the wheel. The 60-ft. wheel has 272 buckets on each side, the dividing plates sloping at 30° to the tangent of their inner circumference; effective width of bucket is 4 ft. 3 1/2 in.; radial depth, 20 in. Diameter of wheel is 58 1/2 ft. to the inner edge of the buckets, 60 ft. 2 in. at center line of buckets, and 65 ft. to the pitch line of the gear. Effective lift (diff. in flow levels) is 49 ft. 10 in. Capacity per 24 hr., 40,000,000 gal. water and 6,500 tons of sand; wheel is rotated by a 700-hp. motor with rope drive to a pulley on the pinion shaft. The 50-ft. wheels have 222 buckets on each side, pitched at 36° from the tangent; diameter of inside circle, 47 ft. 10 in. They lift 30,000,000 gal. water and 3,500 tons sand per 24 hr. each to an effective height of 39 ft. 7 in.; the pinion shafts are belt-driven from 350-hp. motors. The KENNEDY MINING & MILLING Co., California, used four 56-ft. tailing wheels in tandem to elevate stamp-mill tailing to flumes (*97 J 517*). A wooden flume delivered to the first wheel about 1,500 ft. from the mill; the second wheel was 100 ft. distant, the third, 820 ft., and the fourth, 200 ft. The LIFT was about 35 ft. in each wheel; the flumes were set on 2 1/2% grade. The mill capacity was about 400 t.p.d. At the old BELMONT MILL, Millers, Nev. (*106 P 282*), stamp-mill pulp was lifted 48 ft. to classifiers by a tailing wheel. Operation was reliable and upkeep low; 87,952 tons was elevated in 1 yr. at a cost, including classifying, of 3.6¢ per ton. The TONOPAH MILL, Millers, Nev. (*106 P 282*), had two wheels. No. 1 was 30-ft. diameter and elevated 500 tons of dry ore and 3,500 tons of solution per day with a 7 1/2-hp. motor. First cost was high but the wheels were efficient and maintenance was low compared with bucket-elevators. The cost of elevating and separating was 8¢ per ton. At the CITY AND SUBURBAN MINE, Witwatersrand (*77 J 481*), a 25-ft. wheel lifted 5,549 lb. of tailing pulp per min. 19 ft. 1 in. The theoretical power requirement was 3.208 hp.; the actual power, including two intermediate countershafts, was 6.635 hp.; total efficiency, 48.35%. At HENRY NOURSE mine, Witwatersrand (Julian & Smart), a 60-ft. wheel was operated at 45% efficiency and consumed 15 hp. The drive sheave was 55-ft. diameter, driven at 3 r.p.m. by 1 3/4-in. manila rope from an 11-ft. sheave on the countershaft. The wheel axle was 20 ft. × 14 in. with bearings 2 ft. 6 in. × 12-in. diameter. The life of the rope was 3.5 yr. (*77 J 481*). At the BULLFINCH PROPRIETARY mill, W. A. (*13 CME 531*), a tailing wheel elevated the product of stamp mills to hydraulic classifiers. Diameter of wheel, 40 ft.; 112 @ 720-cu. in. buckets; peripheral speed, 400 f.p.m.; driven by manila rope, 6 in. in circumference, which lasted 60 da.; power consumption, 7.3 hp.; about 2,500 tons of ore and solution was lifted per day.

21. AIR-LIFT

The AIR-LIFT (Fig. 99) is used to elevate solutions, slime, and, in certain cases, sand pulps. It consists of a delivery pipe *a* submerged for a part of its length in well or sump *b;* compressed air is introduced into the delivery pipe at the foot-piece *c* through an air pipe *d.* The air causes a decrease in the density of the fluid in the delivery pipe and consequent elevation by hydrostatic pressure and discharge at *e.* Efficient operation depends on proper design of the lift and regulation of the air pressure. The known factors in any particular case are the amount of fluid to be elevated and the height to which it must be raised; the important items to be determined are the volume of air required, the pressure at which it must be delivered, the size of delivery and air pipes, and the depth to which the delivery pipe must be submerged below the normal level of the liquid in the well or sump.

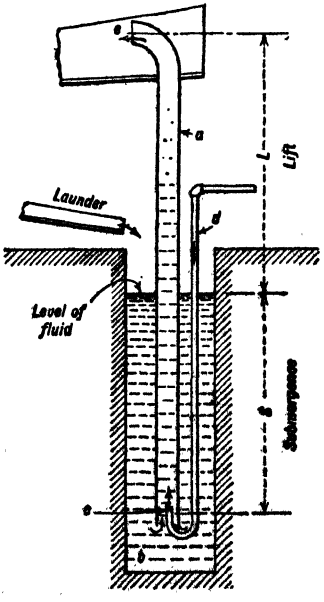

FIG. 99. General arrangement of air-lift

Table 64. Submergences for air-lifts (*Sullivan Machinery Co.*)

Lift in feet (L)	Submergence, per cent. $\left(\frac{100S}{S+L}\right)$
Up to 50	70 to 66
50 to 100	66 to 55
100 to 200	55 to 50
200 to 300	50 to 43
300 to 400	43 to 40
400 to 500	40 to 33

The depth of submergence S (Fig. 99) for most efficient operation at any lift L cannot be exactly

determined in advance; if the air-lift is to handle large quantities of material so that a slight improvement in efficiency will cause considerable saving, provision should be made to vary submergence after operation is started. The figures in Table 64, based on average practice, may be used for calculation in design.

Air pressure. The pressure at which air must be delivered to the foot-piece is governed solely by the depth of submergence S and should be just sufficient to force air into the delivery pipe; $P_1 = 0.434gS + P$, where P is the atmospheric pressure in lb. per sq. in., P_1 is absolute pressure of air entering the foot-piece, and g the sp. gr. of the fluid to be elevated. A slightly higher pressure will be required in starting up. The pressures at which air is supplied at the foot-piece in operating lifts conforms closely to the theoretical pressures thus calculated. Excessive pressure causes air to escape from the bottom of the delivery pipe into the well; this reduces the density of the fluid therein and may stop the lift; at any rate, to keep the lift in operation under such conditions will require a large excess in volume of air and so reduce efficiency.

Table 65. Values of C in Equation 1

Lift in feet	C
10 to 60	243
61 to 200	233
201 to 500	216
501 to 650	185
651 to 750	156

Volume of free air required may be calculated by the following formula:

$$V_a = 0.8L/C \log [(S + 34)/34] \quad (1)$$

in which V_a = cu. ft. of free air per gallon of fluid (at normal pressure, P_a, 14.7 lb. per sq. in. and 60° F.) and C = a constant varying with height of lift, L. Values of C are given in Table 65. Results obtained closely approximate actual values.

The size of delivery pipe required can be calculated from the amount of fluid to be delivered in a given time and the volume of air used during that time. Certain values for velocity have been found satisfactory in practice, and by taking pipe of a size to keep within these limits losses due to friction will be kept within reasonable amounts. The VELOCITY OF THE FLUID in the discharge pipe increases as the top is neared owing to expansion of the contained air. The velocity at the foot-piece may be taken at 4 to 8 ft. per sec. and the velocity at discharge should be kept under 20 to 25 ft. per sec. Velocities should never be so low that solid material will settle out of the rising liquid or less than the velocity at which the largest air bubbles will rise in the fluid.

Let V_1 = cu. ft. of air per min. at pressure P_1; P_1 = absolute pressure of air at the foot-piece, lb. per sq. in.; Q = cu. ft. of liquid per min.; v_1 = velocity in ft. per min. at foot-piece (assumed between 250 and 450); A = internal area of the delivery pipe in sq. ft.; q = gallons of liquid per min. Then $Q = q/7.48$ and $V_1 = qP_aV_a/P_1$. The total volume of air and liquid at the foot-piece equals $Q + V_1$ cu. ft. per min. and the required area of the delivery pipe = $A = (Q + V_1)/v_1$. Standard pipe nearest this size may be used.

The velocity of the air-liquid mixture at the discharge should be calculated to insure that it is not greater than 20 to 25 ft. per sec. Expansion of the air on rising may be considered isothermal since the air is in small bubbles surrounded by water.

Some authorities allow capacities of 10, 12, or 15 gal. of fluid per min. per sq. in. of cross-section of the delivery pipe and calculate the size of pipe on this allowance, but it is wise to check by calculating actual velocities at the foot-piece and discharge.

Size of air pipe can be found by reckoning air velocity at 20 to 30 ft. per sec.; velocities up to 70 ft. per sec. are sometimes used but friction loss is higher.

Foot-pieces are of various designs; the simplest is merely the projection of the air pipe into the lower end of the delivery pipe (Fig. 99). Other forms are shown in Figs. 100 and 101. The air should be dispersed as completely as practicable; large air bubbles rise faster than small, with consequent greater slippage of the liquid past the bubbles. To reduce SLIPPAGE to a minimum, the more complicated foot-pieces introduce the air through many small holes, thus obtaining smaller bubbles and better dispersion.

TESTS have shown that the efficiency of the system is increased appreciably by use of properly designed foot-pieces. At the EAST RAND PROPRIETARY MINES, LTD. (*105 EL 26*), efficiencies were 17.7% and 27.5% with a foot-piece admitting air through a single 4-in. opening, compared with efficiencies of 37.15% and 30.55% with the improved style shown in Fig. 101. These tests were made on lifts elevating slime mill pulps weighing 63.3 lb. per cu. ft. about 30 ft. A slight flare at the lower end of the foot-piece is advantageous in furnishing a gradual increase in velocity of entering fluid.

Discharge pipe is sometimes increased in size upward on long lifts to reduce the velocity. The advantages of changing to a larger size with ordinary reducers is questionable, as a sudden change of velocity with consequent eddy losses occurs; with a long gradual reducer eddy losses are diminished but gradual increase in pipe diameter is impractical except possibly for low lifts in agitating and aerating machines such as Pachuca or Parral tanks. The best arrangement for discharge end is a vertical opening with a cusp-shaped umbrella

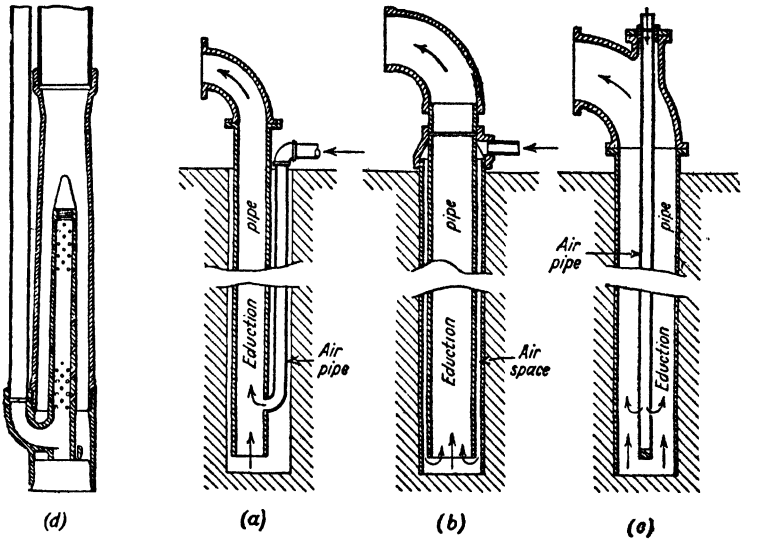

FIG. 100. Foot-pieces for air-lifts (*Sullivan Machinery Co.*).

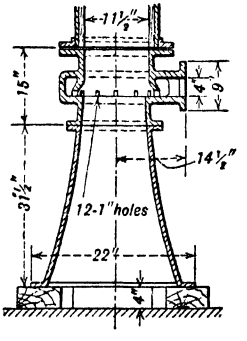

Diameter	Inches	
	No. 1	No. 2
Outside top flange	21	23
Inside pipe	11 1/2	13 1/2
Outside flange below air inlet	19	20
Inside bottom of bell	22	30

FIG. 101. Foot-piece for sand and slime pulps (*105 EL 26*).

(Fig. 102) to deflect the stream downward. The discharge may be turned horizontally by use of a long-radius elbow, but it will not be as efficient; if the discharge pipe is turned and run any considerable distance horizontally allowance must be made for further losses.

Losses in an air-lift are friction in the pipe lines, slippage of fluid past rising air bubbles, and velocity head lost at the discharge. Friction losses can be kept within reasonable limits and slippage can be reduced by increased dispersion of air. Ordinarily the velocity head lost is unavoidable on account of the necessity to keep the solid in suspension; some saving could be made by the use of increasing-diameter pipe, but this is generally impracticable.

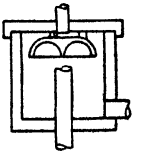

FIG. 102. Umbrella top for air-lift.

Efficiency of the air-lift may be expressed as the ratio (multiplied by 100) of the theoretical horsepower needed to raise the liquid to the air horsepower required for adiabatic compression, or the indicated horsepower of the air-compressor cylinders, or the input horsepower to the compressor as determined from steam-indicator cards, or the motor power consumption. WATER HORSEPOWER = $62.5QgL/33{,}000$. AIR HORSEPOWER WITH ADIABATIC COMPRESSION = $\frac{144PVn}{33{,}000(n-1)}\left[\left(\frac{P_1}{P}\right)^{\frac{n-1}{n}}-1\right]$, where $n = 1.406$ for single-stage adiabatic compression.

In making comparisons of air-lift efficiency with the efficiency of other systems, the work of the air-lift should not be condemned because of an inefficient compressor plant nor should the lost work occurring in the compression of the air be disregarded.

Efficiencies for good work in practice range between 35 and 40%; instances of efficiencies up to 45% are claimed.

ADVANTAGES. The air-lift is easily constructed; lack of moving parts reduces wear, expensive repairs, and shutdowns; attendance for the lift itself is insignificant but a proportionate part of compressor charges must be borne by it. Where aeration and agitation of the fluid to be elevated are desired it is especially suitable. Flexibility can be obtained by provision of a valve on the air line operated by a float on the surface of the liquid in the sump so that the air supply can be regulated to the amount to be lifted. When large variations occur for considerable lengths of time lift columns of various sizes may be provided so as to be easily interchanged. An air-lift can generally be easily cleaned out by shutting off the discharge and turning on the air at as high a pressure as possible, thus forcing out and mixing any accumulations in the pipe lines; these will be removed readily on again opening the discharge. The first cost ordinarily will be less than for other devices. The greater power as compared with other systems may be compensated by savings in attendance and repairs. Air lifts have been successfully applied to the elevation of sand and slime pulps. Where acid or other corrosive fluids are to be elevated the air-lift has a distinct advantage over pumps.

DISADVANTAGES. Proper design is essential for operating efficiency. It is necessary to provide a sump or well of considerable depth; great depths can be avoided by compounding the lift, making it a series of short lifts, but this complicates and increases the piping. When compressed air is not already available, air-lifts would be of doubtful advantage unless large volumes were to be handled.

Application of air-lift to mill work is generally limited to lifts under 20 ft., owing to the depth of submergence necessary. In such cases, especially where comparatively small tonnages are handled,

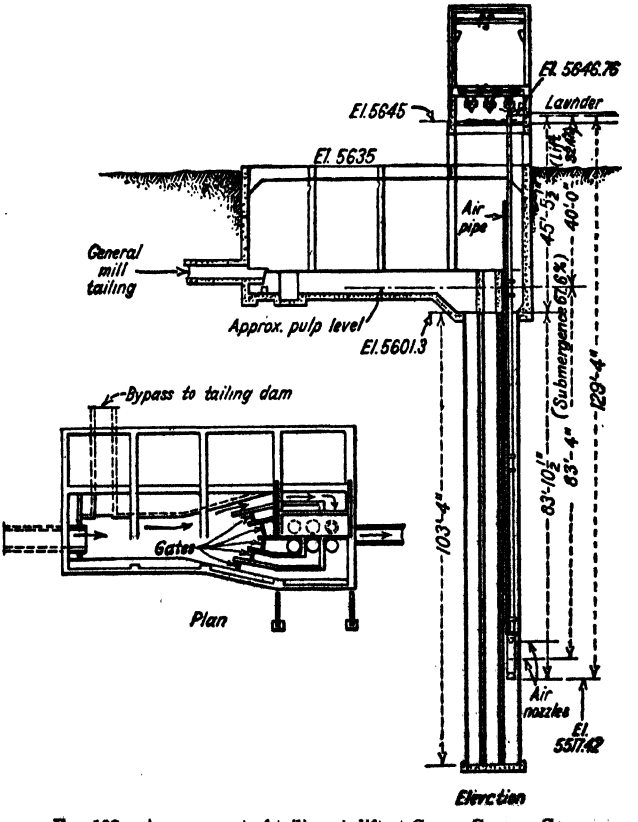

FIG. 103. Arrangement of tailing air-lift at CHINO COPPER CO.

little attention has been given to the refinements of design necessary for efficient operation, as the total power consumed is small. However, close attention to design and efficient operation have resulted in the installation of several plants for handling large tonnages of mill tailing at considerable

saving over elevators, centrifugal pumps, or tailing wheels. At CHINO COPPER CO. (*112 J 806*) an air-lift to elevate 12,000 dry tons per 24 hr. of mill tailing in a pulp containing about 15% of solids was installed in preference to a bucket-elevator system because of lower first cost and an estimated operating cost of 72% of that with bucket elevators. Actual operation showed that operating costs were about 50% of those for bucket elevators. The general arrangement is shown in Fig. 103. Six well pipes were provided in a single shaft, with gates arranged to deflect the incoming pulp-stream to whichever one was being used. Three sizes of lift columns of standard, wrought-iron, flange-connected pipe were made as shown in Fig. 104 to be used with varying capacities and to determine which gave the highest efficiency. Details of the foot-piece are shown in Fig. 105, *A*. A traveling crane on a steel framework was installed to facilitate changing the lift columns; concrete umbrella deflectors on a movable carriage over the discharge ends of the columns caused the rising pulp to drop into a concrete box from which it flowed away in a launder. Air was furnished from the main powerhouse, 530 ft. distant, by two Ingersoll-Rand, Imperial-type *XPV-4* steam-driven compressors with compound steam cylinders 13- and 29-in. diam. and duplex single-stage air cylinders 22-in. diam. by 20-in. stroke. Special oil-pressure governors controlled the speed of the compressors so that with decrease of pressure or lowering of pulp in the well the governor caused the compressor to slow down until the wells filled again with pulp and the reverse action took place. Table 66 presents operating details for 16 mo. of 1919 and 1920. For cost data see Sec. 20, Art. 3. The air-lift proved very successful in taking care automatically of fluctuations in feed rate, without change of lift columns. Although ample provision was made for reserve wells and columns in case of clogging it was found that the lifts could free themselves and start up even after 32 ft. of sand had settled in the pit.

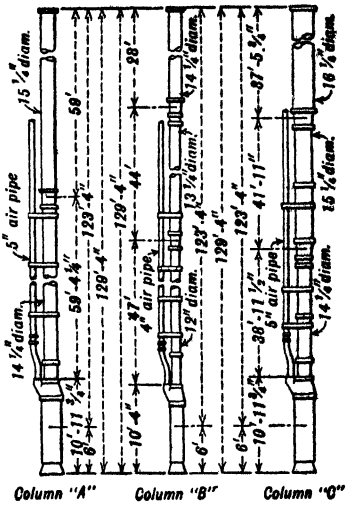

FIG. 104. Lift columns for air-lift at CHINO COPPER CO.

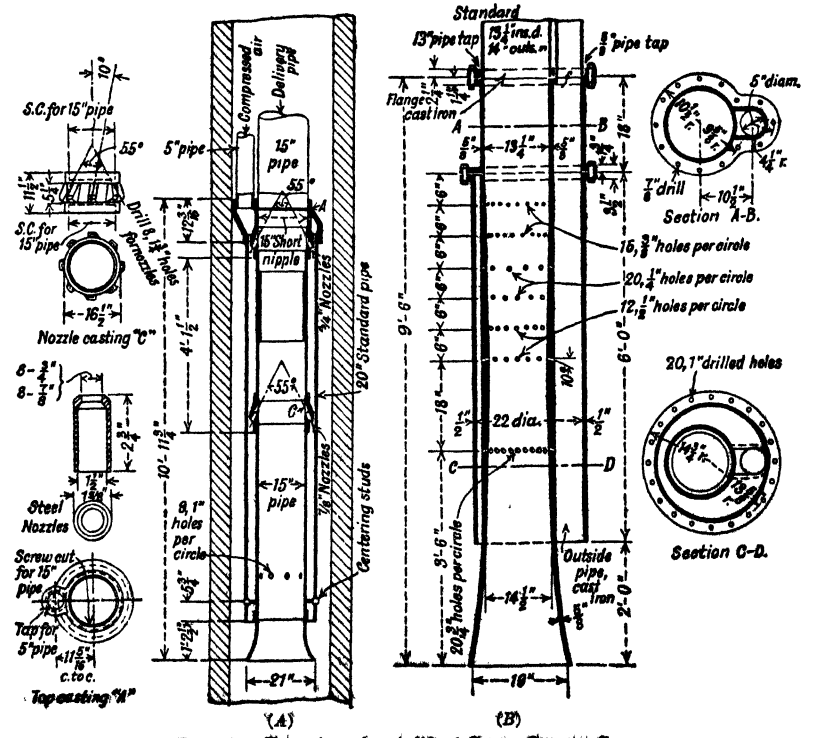

FIG. 105. Foot-pieces for air-lift at CHINO COPPER CO.

Table 66. Operations of air-lift at Chino Copper Co.

Elevation above sea-level about	5,600 ft.
Height of lift	40 ft.
Submergence	83 ft. 4 in.
Best submergence (from 80 tests)	67.6 per cent.

Averages	Month of highest efficiency	Month of lowest efficiency	Average of 16 mo.
Wet tons per day	36,445	18,700	31,723
Dry tons per day	5,473	2,805	4,758
Revolutions per minute of compressors	86	66	85.7
Wet tons per minute	25.3	13.0	22.0
Dry tons per minute	3.8	1.94	3.30
Cubic feet of piston displacement per minute	1,504.1	1,154.3	1,498.9
Actual air, cubic feet per minute	1,240	952	1,242
Gallons of pulp per minute	5,514	2,830	4,793
Cubic feet of actual air per gallon	0.225	0.336	0.2595
Indicated horsepower in steam cylinders	150	115	150.2
Auxiliary horsepower (10% of above)	15.0	11.5	15.0
Total horsepower	165	126.5	165.2
Water horsepower	61.3	31.4	53.3
Efficiency based on indicated horsepower in steam cylinders, %	40.8	27.3	35.5
Efficiency based on total horsepower, %	37.2	24.8	32.2

Fig. 105, *B*, shows a foot-piece designed by Ingersoll-Rand to improve the efficiency of the CHINO lift. This foot-piece was attached to 43 ft. of standard 14-in. O. D. pipe followed by 76 ft. (to the discharge) of special welded pipe increasing uniformly from 14 to 16 in. outside diameter. With this column it was expected that power consumption would be cut 5 to 10% with a corresponding increase in efficiency of 2 to 4 units per cent.

At another large copper mine in the southwest (*105 J 1177*), three air-lifts replaced three 10-in. centrifugal pumps direct-connected to 150-hp. motors to lift 7,000 g.p.m. of tailing having 4 or 5 parts of water to 1 of solids. The air-lifts consisted of 10-in. discharge pipes in 20-in. wood stave pipes; a 40-hp. motor drove the compressor for each. Operating costs and repairs on the air-lifts were a small fraction of those when pumps were used since excessive wear of sand in the pumps reduced the life of runners and liners to about 4 da., continuous running. At the Angelo and Cason mills of EAST RAND PROPRIETARY MINES, LTD., tests were made to determine best operating conditions (*105 EL 26*). The foot-piece used is shown in Fig. 101. The lower 35.4 ft. of discharge pipe was lined with wood, thus reducing the internal diameter of pipe on No. 1 from 14- to 11 1/2-in. and on No. 2 from 16- to 13 1/2-in. Table 67 gives results of some of the tests on slimes and sands. The slime pulp weighed 63.3 lb. per cu. ft. and the sand, 64.56 lb. per cu. ft. Columns 1, 2, and 3 show the effect of submergence on efficiency. Plotting the results of these and other tests gave a curve indicating a submergence of 1.83 to 1 for a maximum efficiency of 36.2%. Column 5 on Cason slimes shows higher efficiency than this, but it was attained with an increased amount of pulp.

Table 67. Tests on air-lifts at East Rand Proprietary

	1	2	3	4	5
Material elevated	Angelo slimes	Angelo slimes	Angelo slimes	Cason sands	Cason slimes
Foot-piece	No. 2	No. 2	No. 2	No. 1	No. 2
Submergence, ft.	52.528	45.696	39.895	78.17	37.54
Lift, ft.	26.8	33.6	39.5	43.0	17.33
Submergence : lift	1.96 : 1	1.36 : 1	1.01 : 1	1.817 : 1	2.166 : 1
Gage pressure	24	21.5	18	34.5	14.785
Free air per minute, cu. ft.	822.5	1,410	2,820	892.5	854.57
Free air per cubic foot of pulp	2.28	3.91	7.83	2.418	1.871
Cubic feet of pulp per minute	360	360	360	369	456.7
Throat velocity, feet per second	6.03	6.03	6.03	8.526	7.612
Theoretical horsepower	18.49	23.18	27.25	31.05	15.182
Horsepower per cubic foot of free air per minute	0.068	0.063	0.055	0.088	0.04775
Air horsepower (adiabatic)	55.93	88.83	155.6	78.54	40.706
Efficiency, %	33.1	26.1	17.5	39.5	37.206

22. FEEDERS

Feeders are necessary whenever it is desired to deliver a uniform stream of dry or moist ore, since such ore, whether coarse or fine, will not flow uniformly from a reservoir of any kind through a gate except when regulated by some type of feeding mechanism.

The requirements of a satisfactory feeder are: (*a*) It must be positive. (*b*) Once set for a given rate it must deliver at that rate irrespective of the amount of ore ahead of it. (*c*) It must be readily subject to adjustment to vary its delivery rate. (*d*) It must start under load, and stop without spill. (*e*) It should be adapted to the size of material to be handled. The commonest types of feeders are: (1) traveling bands of articulated pans, called APRON FEEDERS, or of belting, called BELT FEEDERS; (2) revolving pulleys or rollers with smooth or irregular surfaces, called ROLL or PULLEY or ROTARY FEEDERS; (3) shaking or reciprocating plates; (4) plungers; (5) screws; (6) revolving disks; (7) traveling endless chains. Movable grizzlies (Sec. 7, Art. 4) are used for feeding coarse ore and special forms of feeders are used with cylinder mills (Secs. 5 and 6).

Apron feeder (Fig. 106) is used for coarse ore. It consists of a short pan conveyor (Art. 7) set underneath a bin or hopper in such a way that a part of the weight of the filling rests on the carrying surface. This surface should be sufficiently uneven to make the feeder positive. If the lumps are large and there is considerable pressure of material above the feeder tending to cause the material to pack, the pans should be deeply corrugated, but if the material is fine or does not tend to bridge at the hopper mouth, a smooth

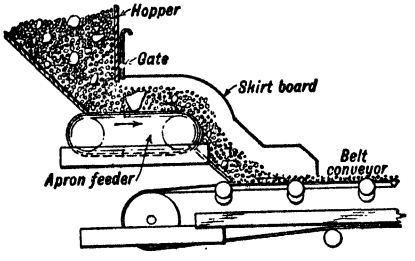

FIG. 106. Apron feeder delivering to belt conveyor.

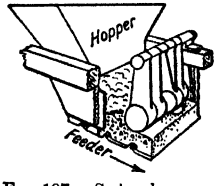

FIG. 107. Swing-hammer feed regulator.

surface may be used. If desired, the bin gate can be eliminated and replaced by a swing-hammer regulator (Fig. 107). This device automatically adjusts itself to the passage of large lumps, while acting in general to maintain a layer of even thickness on the apron. Heavy chains, steel rail, and the like are used as substitutes for the swing hammer. A disadvantage of this device is that if the swinging part breaks for any reason the broken steel is apt to go into the crusher. A means for preventing this contingency (*112 J 660*) consists of, say, three steel rods bolted at several places to the swinging part and fastened to the support; these will hold the parts of a broken hammer until it is discovered and removed.

Usual widths of apron conveyors are 24, 30, 36, 42, 48 and 60 in.; length c–c. of sprockets is normally 1 1/2 to 2 times the width.

For very heavy material, such as coarse ore containing large lumps, several types of apron conveyors with overlapping pans of cast carbon or manganese steels have been developed recently. One of these, the Robins-Oro apron feeder, consists of a series of double-beaded, overlapping, interlocked manganese-steel pans heavily ribbed on the underside. Cast integral with each pan, and near each end, there is a wide link-hub under the rear edge, and two narrow link-hubs under the front edge; the wide link-hubs on one pan fit between the narrower hubs on the next pan. Between the hubs at the front and rear edges of each pan there is a pair of integral-cast ribs which take the form of a chain; they are flanged on the bottom to present a continuous flat surface which runs on idler rollers. Connections between the pans are made by nickel-steel, heat-treated pins turning in ground manganese-steel bushings, which the link-hubs are ground to fit. The idler rollers are keyed to steel shafts running in extra heavy bearings. Four lugs on each pan serve to make the apron a continuous rigid surface in which there is no possibility of buckling. To prevent spill, the pans have 4-in. vertical flanges, cast integral, which lap outside the skirtboards. Raised smooth surfaces, just inside the end flanges and directly under the edges of the fixed steel skirtboards, form continuous sealing strips. The frame supporting the feeder is constructed of longitudinal girders, and braced by I-beam cross-ties. Standard widths are 18 to 72 in.; special sizes up to 84 in. may be constructed.

Speed of apron FEEDERS ranges between 5 and 20 f.p.m. They are usually equipped with push-button control, and often have variable-speed motors.

Capacity depends upon rate of travel, width, and size of material. The depth of the layer must be at least as great as the size of the maximum lump, if a fixed slide gate is used on the bin, but if a swing-hammer regulator or its equivalent is used, the layer may be thinner. Tons per hour approximately equal $3wts$, where w, t, and s are width of the feeder in ft., thickness of the layer in ft., and speed in f.p.m. respectively. This assumes 20 cu. ft. of broken material as piled on the conveyor to weigh 1 ton, which is equivalent to an allowance of 56% voids. Table 68 gives data on some installations of pan and apron feeders.

Table 68. Data on pan and apron feeders (Q)

Plant	Size ore	Moisture, %	Tons (dry) per 24 hr.	Width, in.	Speed, ft. per min.	Drive	Power, hp.	
							Inst.	Cons.
Andes Copper Co.	<15-in.	4 to 5	10,214	54	13 *c*	*d, sr*	15	.....
Utah Copper Co., Arthur	<8-in.	4.9	8,000	72	*v*	*d, sr*	121/2	8
	<1-in.	4.9	1,250	60	*v*	*ls*	.....	.....
Magna	<8-in.	5.0	9,000	60	*v*	*d, sr*	25	.....
Cia. Ind. El Potosi	<4-in.	2	2,900	18	.....	*gm*	3	2 1/2
St. Jos. Lead Co., Balmat	R.o.m.	.....	625	36	*v*	*d, sr*	3	.....
	R.o.m.	.....	625	30	*v*	*sr, r*	5	.....
Chuquicamata	<8 or 10-in.	1.6	1,000 *g*	72	*v*	*d, sr*	50	.....
	<8 or 10-in.	1.6	150 *g*	36	*c*	Belt *a*	.....	.....
Nev. Consol., Chino	>7 1/2-in.	2	1,000	96	*c*	*d, sr*	30	32
	<7 1/2-in.	8	750	72	*v*	*d, sr*	10	7
	2.5% >6-m.	4	500	.....	*v*	Belt	7 1/2	5
Nev. Consol., Ray	<1-in.	3 1/2	750	22	8 *c*	V-belt	2	0.8
Phelps Dodge, Ajo	R.o.m.	1 to 2	850 *g*	.....	11 *c*	Belt	75	.....
	<7-in.	1 to 2	850 *g*	.....	30 *c*	Belt	15	.....
	<7-in.	1 to 2	300 *g*	.....	12 *c*	Belt	.....	.....
	2 5/16-in.	1 to 2	400 *g*	.....	12 *c*	Belt	10	.....
Magma Copper Co.	Coarse	2 to 4	94 *e*	30	*v*	Belt	5	.....
	Fine	2 to 4	250 *f*	24	*c*	*ls*	.....	.....

a Eight such feeders on same line shaft, 3 or 4 operating at a time.
c Constant speed.
d Direct-connected.
e Over each of 8 such feeders in parallel in 6 1/2 hr.
f Over each of 3 such feeders in parallel in 6 1/2 hr.
g Per hr.
gm Geared motor.
ls Line shaft.
r Ratchet.
sr Speed reducer.
v Variable.

Pan conveyors are used in place of apron feeders when it is desired to both transport and feed the material (see Fig. 108). At UNITED COMSTOCK a 48-in. pan conveyor with wood-cushioned pans was

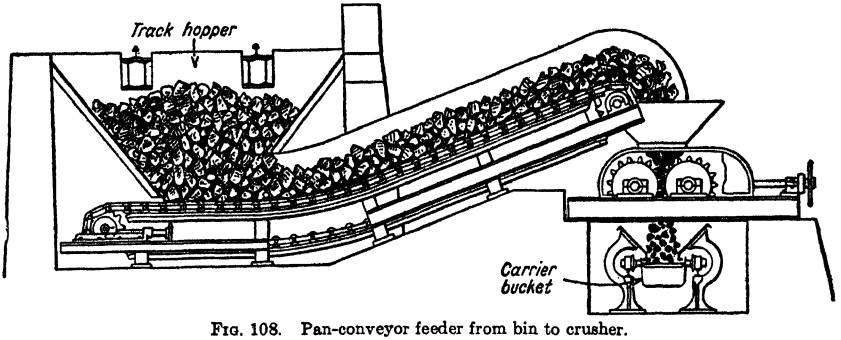

FIG. 108. Pan-conveyor feeder from bin to crusher.

used to feed from the coarse-ore bin. It was driven at 9 to 15 f.p.m. from the head shaft by a direct-connected motor with double-gear speed reducer (*114 J 848*). This conveyor both fed and elevated to a grizzly preceding the primary crusher. At INSPIRATION (*121 J 726*) special feeders with manganese-steel plates (PLATENS) of the form shown in Fig. 109 were used to feed run-of-mine ore from bins to the primary breakers. Instead of having rollers on the link pins to run on a track, the rollers were stationary and supported the links on the loaded run and the platen flange on the return. The platen width was 4 ft.; width between skirt plates, 42 in.; length between sprocket centers, 42 ft. 6 in.; maximum thickness of ore stream, 2 ft.; maximum load, 7 cu. ft. per ft. of length (= 0.35 ton); average maximum load delivered, 300 t.p.h., including many stops for picking waste and to prevent overloading the crusher. Motor input at 20 f.p.m., 5.36 hp. empty and 7.50 hp. loaded; at 10 f.p.m., 3.43 and 4.29 hp. respectively. Short feeders (7 ft. 6 in.), the same width drew 3.21 hp. empty and 3.75 hp. loaded when running 40 f.p.m. and fed about 12 t.p.h.

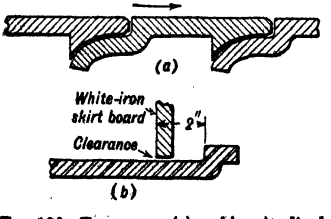

FIG. 109. Transverse (*a*) and longitudinal (*b*) sections of manganese-steel platens on apron feeders at INSPIRATION.

Belt feeders are essentially short belt conveyors so placed under an inclined chute that they control the discharge of material therefrom. The method of placing relieves them

from any part of the static load of the material in the bin. The head pulley must be placed so that the surface of the material at rest in the chute falls behind the vertical plane

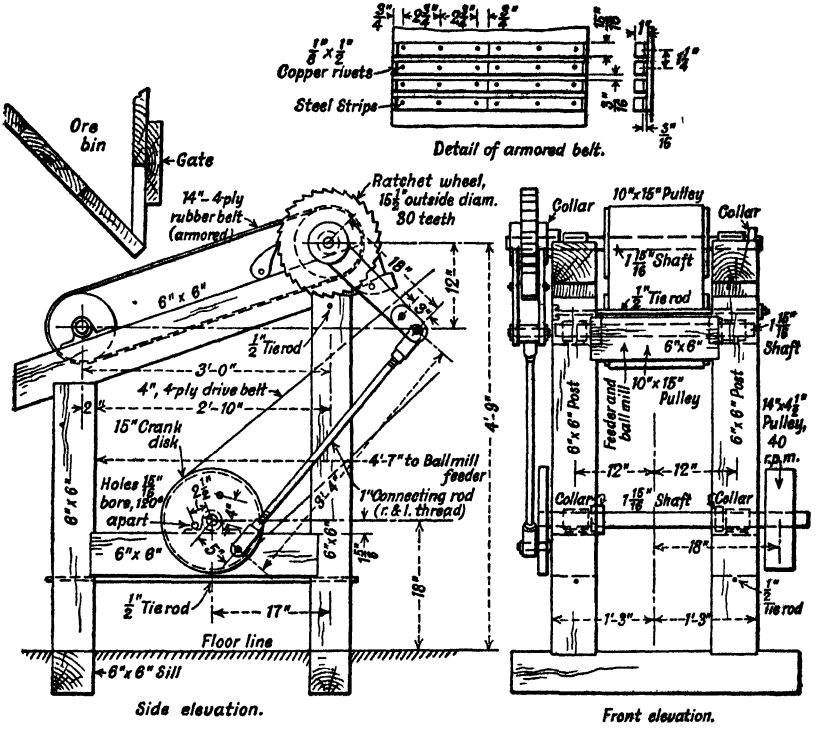

FIG. 110. Belt-apron feeder.

through the pulley shaft. Belt feeders frequently and properly replace apron conveyors for fine ore but are unsatisfactory for coarse ore since uneven loading by heavy lumps deforms them so that material spills, and because wear is excessive. Occasionally the belt surface is armored as shown in Fig. 110 (*111 J 63*). The material list for the feeder pictured follows:

Six common flat journal boxes, 1 15/16-in. 12 bolts 1/2×7 1/2-in. for same. 12 1/2-in. mal. washers, for same. 1 shaft 1 15/16 in. × 3 ft. 2 in.; keyseated for 10 × 15 pulley and ratchet wheel. 1 shaft 1 15/16 in. × 2 ft. 6 in.; keyseated for 10 × 15 pulley. 1 shaft 1 15/16 in. × 3 ft. 4 in.; keyseated for 14×4 1/2-in. pulley and crank disk. 6 split safety collars, 1 15/16-in. 9 ft. 3 in. of 4-ply rubber belt, armored as shown. 2 c.i. solid pulleys 10 × 15 in., 1 15/16-in. bore. 1 c.i. solid pulley 14 × 4 1/2 in., 1 15/16-bore. 1 ratchet wheel (15 1/2 in. outside diam., face 2 1/2 in. ±), with arm; 1 1 15/16-in. bore. 1 crank disk, 15 in. diameter, face 2 in. ±; 1 15/16-in. bore as shown. 1 crank pin 15/16 in. × 4 in. ±. 1 connecting rod with ends, as shown. 1 pin, 15/16 in. × 6 in. ±, with washers and keys. 1 pawl, 2 in. × 6 in. × 2 1/2 in. with pin, washers, and keys. 1 pawl, 2 in. × 6 in. × 2 1/2 in. with pin, washers, keys, and box. Armor plates and rivets for belt.

The price in 1921 was $157 against $285 to $350 for plunger feeders and $300 for roll feeders of equal capacity.

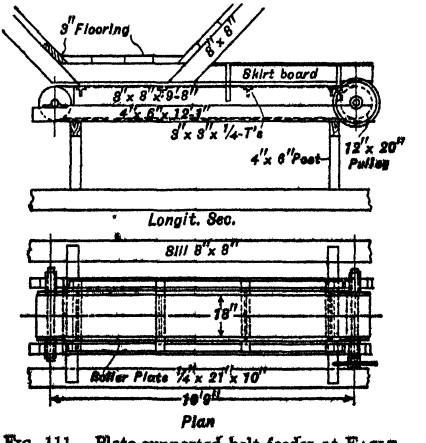

FIG. 111. Plate-supported belt feeder at EAGLE PICHER.

Fig. 111 shows construction of a locally built feeder. Four such feeders are installed under a 400-ton fine-ore bin (5% >1 in.; 5% moisture) at the Montana mine of EAGLE-PICHER Co., each delivering 140 t.p.d. (three feeders at a time) to a collecting conveyor leading to a ball-mill. Distinguishing feature is the use of a 1/4-in. steel sole-plate to support the entire length of the loaded run of the 18-in. belt and enable it to carry the whole vertical pressure from ore in the bin. The 12-in. head pulley is driven by sprocket; the sloping skirtboards are lined with belting.

Capacity may be calculated by the same formula as for apron feeders. Table 69 gives data on several belt feeders.

Table 69. Data on belt feeders (*Q*)

Plant	Size ore	Moisture, %	Tons (dry) per 24 hr.	Speed, ft. per min.	Drive	Power, hp.		Width, in.
						Inst.	Cons.	
Sherritt-Gordon	<1/4-in.	13	600	Var.	*b, ra*	2	.....	.....
Tenn. Copper Co.	<7-in.	2 1/2	200	76	.....	*a*	.....	42
Weepah Nev. Min. Co.	<3/4-in.	3	310	Var.	*ra*	5	.....	.....
Climax Molybdenum Co.	<3-in.	2 to 3	120	13	*ch*	1	.....	48
St. Jos. Lead Co., Balmat.	<1/2-in.	.....	25 *d*	32 *c*	*ch, r*	1	.....	24
N. J. Zinc Co., Franklin	<10-m.	3	310	*c*	*ch*	1/3	1/3	.....
Cons. M. & S. Canada	85% <1/4-in.	1	400	7.22 *c*	Worm	1	0.3	.....
Britannia M. & S. Co.	34% >8-m.	2	75 to 95*d*	Var.	*b, r*	7 1/2	6	.....
Matahambre	7% >3-m.	2 1/2 to 4	250	25.9 *c*	*r*	3	1	20
Cia. Ind. El Potosi	5% >1/2-in.	2	725	.....	.....	.....	.....	12

a A 10-hp. motor drives this feeder and a 54-in. pan conveyor 8 ft. long.
b Belt. *c* Constant speed. *ch* Chain. *d* Per hr. *r* Reducer. *ra* Ratchet.

Morse Vari-stroke feeder is a short belt conveyor passing under a feed hopper at one end and discharging over a head pulley at the other, to which an intermittent motion is applied. A horizontal rocker-arm, fulcrumed on the head-pulley shaft, is oscillated vertically at its outer end by a circular cam on a driven shaft. A lug on this arm engages loosely the edge of a disk keyed to the head-pulley shaft and causes it to turn, on the upstroke of the arm, through friction supplied by a small roller in the wedge-shaped space between lug and edge of the disk. Amplitude of the downstroke (controlling the rate of belt travel) is limited and adjusted by a setscrew.

Roller feeder (drum or pulley feeder) is shown in Fig. 112. The diameter and setting of a feeder of this type should be such that a tangent to the front surface of the roll, drawn from the lower edge of the hopper gate, makes an angle with the horizontal less than that of the angle of repose (ϕ) of the material and less than the sliding angle (θ) of the material against the roll face, and at the same time the angle of the tangent to the roll face at the rearmost point of contact of the ore therewith should be less than θ. Skirtboards must be used to confine material on the roller. Rolls from 12×12-in. to 48×48-in. are commonly used, the larger diameters for coarser feeds and the greater widths for larger capacities.

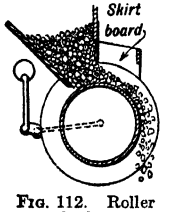

FIG. 112. Roller feeder.

ADVANTAGES are simplicity of design, large capacity, low speed, and low power consumption. DISADVANTAGES are that delivery is almost directly below the feed point and there is considerable loss of headroom.

Table 70. Data on roll, drum, or pulley feeders (*Q*)

Plant	Size ore	Moisture, %	Tons (dry) per 24 hr.	Speed, r.p.m.	Drive	Power, hp.	
						Inst.	Cons.
Andes Copper Co.	<3 1/2-in.	4 to 5	1,653	2 *c*	*d, r*	5	.....
Roan Antelope	<1/2-in., 80% <3-m.	6	12 *a*	Var.	Gears	.....	.....
	<6-in.	6	120 *a*	*c*	*ra*	.....	.....
N. J. Zinc Co., Franklin	R.o.m.	2 3/4	900	*c*	*ch*	.....	.....
	3 to 24-in.	2 3/4	740	*c*	*ch*	.....	.....
		2	800	*c*	*ch*	.....	.....
	<3/4-in.	1 1/2	265	*c*	*ch*	1/2	1/12
	<6-m.	5	725	*c*	*ch*	1/2	1/4
	<6-m.	Dry	360	Var.	*ch*	1/2	1/12
	<6-m.	Dry	440	Var.	*ch*	1/2	1/6
	<8-m.	3	310	*c*	Belt	.....	.....
		Dry	310	*c*	Belt	.....	.....
Consol. M. & S. Canada	<6-in.	1	960	0.57 *c*	Worm	2/3	0.3
Nev. Consol., McGill	1% >4-m.	4.8	217	*c*	.....	2	1/2

a Per hr. *c* Constant speed. *ch* Chain. *d* Direct connected. *r* Reducer. *ra* Ratchet.

At MIAMI COPPER CO., a 48×48-in. roller feeder had two spiders; face, 1 1/2 in. thick, protected by 1/2-in. manganese-steel plates bolted on. It was driven by ratchet and pawl with six possible speed changes.

Wear on drum surfaces can be materially lessened by grooving the surface transversely or by bolting on transverse angles, thus preventing sliding. Such provision is useful also when material tends to pack and bridge at the hopper mouth. Rubber bands (see Sec. 13, Art. 4) should be useful in this service.

Peripheral speed of 5 to 20 f.p.m. is usual.

Capacity in tons per hr. is given approximately by the formula $T = 3\pi dwtn$, where d, w, and t are respectively diameter of roll, width of roll, and thickness of layer of material thereon, in feet, and n = r.p.m. of roll.

Table 70 gives data on several roll feeders.

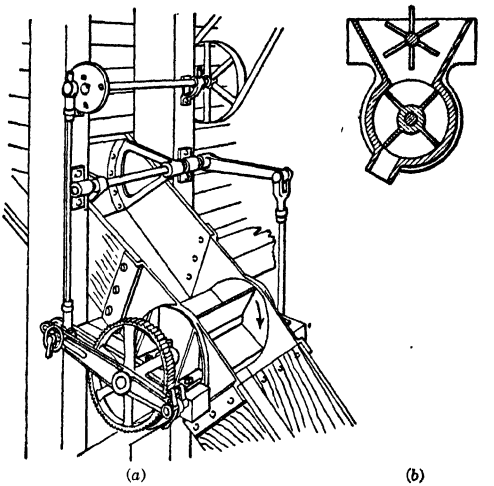

(a) (b)

FIG. 113. Rotary feeder.

Rotary feeder (Fig. 113) is used where close regulation of fine feed is desired. It is usually placed in a hopper chute (item *b*) and lacks the positive features of the apron and roller feeders but with a free-flowing fine feed, or one that can be stirred by revolving prongs as indicated in (*b*), a remarkably close estimation of the quantity passed may be made by attaching a revolution counter to the feeder shaft and carefully calibrating the quantity delivered against r.p.m. The chute form (item *a*) is less common. The figure illustrates the use of ratchet-and-pawl drive, which is probably the best for a slow-moving feeder. Also called a STAR FEEDER.

Fuller rotary feeder, Fig. 114, is of drum type, modified for controlling the flow of fine, dry materials liable to flooding. That is prevented by the shear-plates *a;* the shafts to which these are keyed are connected by the levers *b* and the tension springs *c*, allowing the plates to give outward and pass any accidental piece of hard material. Clearance between shear-plates and the drum is maintained by stops on the levers *b*. The lower edges of the shear-plates are not horizontal (*i.e.*, not parallel with the drum corrugations), whence the discharge from each pocket, and from the feeder as a whole, is continuous, not spasmodic. Bumping of the cast-iron balls inside the drum tends to counteract any clinging tendency of the material.

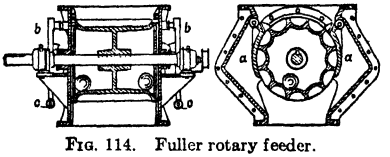

FIG. 114. Fuller rotary feeder.

Reciprocating-plate feeder (Fig. 115). In moving forward into the position shown in (*a*), a layer of material is carried forward on the plate and more material settles from the hopper onto the rear portion of the plate. On the reverse stroke the plate slides under the material and that material at the forward end of the plate has its support withdrawn and falls. Widths range from 12 to 48 in. The plate may be supported on wheels, as indicated in the figure, or suspended by rods.

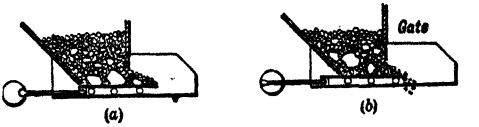

(a) (b)

FIG. 115. Reciprocating-plate feeder.

The SPEED is usually below 30 r.p.m. STROKE LENGTH depends upon the size of material; it should be great enough to prevent bridging above the plate at the end of the forward stroke; usual lengths are between 4 and 12 in. CAPACITY may be estimated from the equation $T = 3ltwn$, where w, l, and t are respectively effective width of feeder, length of stroke, and average thickness of layer on plate in front of hopper gate, in feet, and n = r.p.m. This feeder is suitable for both coarse and fine ore, provided there is no tendency to pack and bridge in hopper mouth. Wear on the plate is considerable and the hopper must be emptied in order to make renewals. The drive should be through a gear, and a flywheel to overcome the inertia at reversing is advisable.

When this type of feeder can be mounted so as to remove the static weight of the column of ore, *e.g.*, under the end of a chute, it may be run at higher speeds and becomes a shaking feeder. The operation is then the same as that of shaking screens (see Sec. 7, Art. 6) and, in fact, screen or grizzly bottoms

are often provided. Such an arrangement is particularly desirable in loading a mixture of medium-coarse and fine material onto a belt conveyor, as it permits the fine material to load onto the belt first (see Fig. 116) and thus decreases wear and lessens slip and tumbling of the coarse lumps; material thus loaded is also excellently arranged for hand picking.

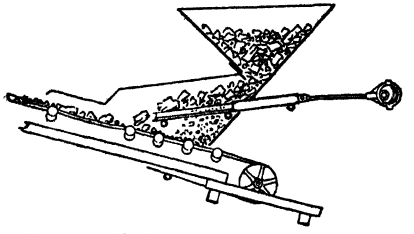

FIG. 116. Shaking grizzly loading conveyor.

Vibrating-tray feeder is a form of shaking feeder. In the mechanical type, the feed trough, inclined slightly (5 to 10°), is hinged at the upper end and supported on an adjustable stirrup at the lower end so that it is just lifted by a projection on a revolving shaft, *e.g.*, a square corner or cam ear, and then dropped. The vibration thus set up is sufficient to move dry, pulverized material readily and, if the number of vibrations is between 240 and 600 per min., will give substantially continuous, uniform movement. Such a feeder is not suitable for heavy loads nor coarse material.

Tray or pan feeders are also vibrated electromagnetically, by devices substantially identical with those applied to the Jeffrey-Traylor and Utah vibrating screens (Sec. 7, Art. 7); the Syntron vibrator is another and similar device, producing a differential throw. Two outstanding advantages of the magnetic vibrating principle are: (*a*) entire absence of rotating or sliding bearings to be lubricated and protected against dust; (*b*) ease of adjustment, since the intensity of vibration (which governs the rate of flow at a given inclination) depends upon electrical input at transformer or rectifier, the latter being subject to simple rheostatic control. In the Magna mill of UTAH COPPER CO., a magnetically vibrated feeder delivers 3,000 (dry) tons of $<^3/_4$-in. ore carrying 5% moisture in 24 hr., with expenditure of 0.3 kw. and at cost of 0.083¢ per ton (*PC*).

Plunger feeder (Fig. 117) consists of an eccentric-driven plunger working in an open-top trough placed below the mass of ore to be fed, or replacing a side-draw chute; unless the hopper is shallow, the latter is the better position.

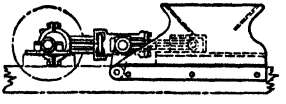

FIG. 117. Plunger feeder.

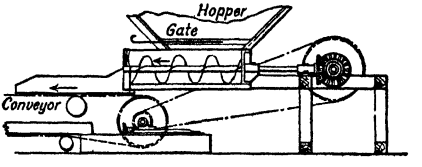

FIG. 118. Screw feeder.

SPEED is usually less than 30 s.p.m. and stroke length from 3 to 6 in. CAPACITY is estimated similarly to that of the preceding feeders.

Screw feeder (Fig. 118) is sometimes used for closely regulated positive feeding of fine, free-running soft material; it is useless for sticky material and wears rapidly with gritty substances. Screws range from 6 to 12 in. diameter, speed up to 80 r.p.m., capacity of a 6-in. screw at 80 r.p.m. is roughly 90 cu. ft. per hr. and of a 12-in. screw, 700 cu. ft. (See also Art. 10.)

Automatic diaphragm feeder. The magnetic separating section of the Franklin mill, NEW JERSEY ZINC CO., contains 43 feeders of the type shown in Fig. 119, ranging in capacity from 5 to 120 t.p.d. (*PC*). The ore is fine, bone-dry, and dusty, and the aim of the feeder is to deliver this material to a conveyor in such manner as to escape the necessity for installing an exhaust dust collector at each place. The bottom of the hopper terminates in a vertical, rectangular chamber *1*, having a small, rectangular, hoppered opening *2* at its lower end. The side of the chamber facing the approaching belt consists of a rubber diaphragm (two 1/8-in. thicknesses in the size illustrated) firmly secured on all four edges. The outward bulge of this diaphragm, roughly proportional to the height of ore within, presses against the vertical lever *3*, which is hinged at top and at its lower end carries a shutter *4*; the rate of discharge is thus automatically adjusted to maintain a column of ore in the chute, insuring steady and nonturbulent flow with minimum fall through the air.

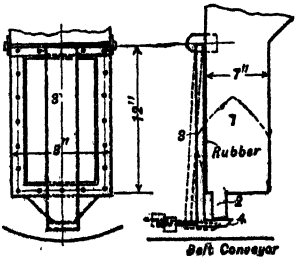

FIG. 119. Automatic diaphragm feeder.

Challenge feeder (Fig. 120), of the revolving-disk type, consists of an inclined circular plate *J* forming the bottom of a chute or hopper *L* which is open at *M*. Disk *J* is revolved slowly and intermittently by bevel gears on shaft *I*, which is driven by the friction pawl *D* attached to lever *B*. When the feeder is used with gravity stamps, *B* is actuated by connecting rod *F* and lever *G* from a tappet *H* on the middle stem of the battery. The feeder may also be pulley driven, in which case a cam on the pulley

shaft lifts *B*. Speed of *J*, and hence feed rate, is varied by adjusting the height to which the outer end of the tappet lever *G* may rise, under the tension supplied by the spring *N*. When applied to a stamp mortar, as shown, the speed adjustment is partly automatic, since the fall of the tappet *H* depends upon the depth of ore in the mortar.

Hardinge disk feeder has a horizontal, circular plate of 30- or 60-in. diameter, continuously rotated by a geared motor situated beneath it. A circular hopper occupies the center of the disk and has an opening in its lower edge partly closed by an inwardly projecting scraper, the position of which is adjustable; space between disk and lower edge of hopper is likewise adjustable, as is also the motor speed, thus offering three means for controlling rate of delivery over the edge of the disk. Maximum capacity, t.p.h., is 20 for the 30-in., and 75 for the 60-in. feeder, the latter rate requiring a 1-hp. motor.

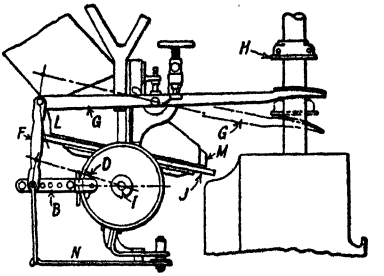

FIG. 120. Challenge feeder.

Ross chain feeder. Chain-type feeder is one of the most effective for controlling the flow of very large and heavy stone or ore from a bin or in chutes. It is based on the principle of opposing a yielding surface to the material and controlling the flow at the top of the stream. The Ross chain feeder (Fig. 121) consists of a curtain of heavy endless steel chains *a* mounted on an overhead tumbler *b* and so suspended as to lie on top of the material and to travel with it. The drum is mounted on a structural steel frame and is driven through a spur gear *c* receiving power from any suitable source. This feeder is made in sizes to handle practically any desired capacity, size of material, and bin opening. SPEED depends upon capacity desired and material handled; it is frequently adjustable. Push-button control is usual for primary-crusher feeders.

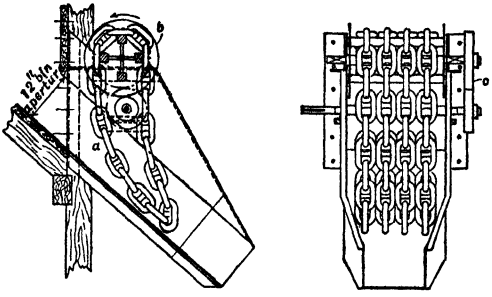

FIG. 121. Ross chain feeder.

Stirrup feeder is essentially an undercut concave gate (Fig. 33) eccentric-driven, with a transverse baffle placed centrally in the box above the swinging gate and clearing the latter sufficiently to prevent wedging. This baffle holds material that falls onto the gate in place so that the gate moves from under and drops it at each oscillation. It has been used frequently for fine-roll feeding.

Constant-weight feeders. In many milling and metallurgical operations, constancy of weight fed to a given device is more important than constancy of volume, particularly if the ore is subject to segregation due to a mixture of sizes (see Art. 2). The above-described feeders (also conveyors) are all capable of maintaining a fairly constant rate by volume, the rate being fixed or adjusted from time to time by varying the size of an opening or the speed of a rotating or traveling mechanism. Several devices are now available for performing this function automatically; others still more elaborately equipped to record the weights actually delivered are described in Art. 23.

Jeffrey-Traylor feeder is a trough or chute magnetically vibrated in substantially the same manner as the screen of the same name described in Sec. 7, Art. 7. It is adjustable as to feed rate by rheostatic control of the electrical input. Constancy in weight of feed is therefore attainable (reportedly within 1%) by discharging over a short, balanced, and counterweighted belt conveyor, depression of which by an overload automatically adds resistance to the electromagnetic circuit and damps the vibration of the feeder. A vibrating feeder was used at HALKYN (*88 IMM 706*) for returning classifier sand to a ball mill; power consumption was low and the arrangement was immune to damage from spill.

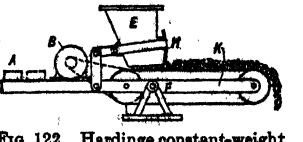

FIG. 122. Hardinge constant-weight feeder.

Hardinge constant-weight feeder, shown diagrammatically in its simplest form in Fig. 122, is a short belt conveyor of which the whole weight is carried by a pair of rocking beams *K* (one each side), balanced on the pivot *F*. The inner ends of these beams carry the motor *B* and the adjustable counterweight *A* (also other equipment in the more elaborate forms), and are connected through suitable linkage and levers with the gate *H* at bottom of the feed hopper *E*. With a given setting of the counterweight, any excess weight of ore on the conveyor thus lowers the gate until equilibrium is restored

and *vice versa*. Rate of feed is adjustable through variable-speed motor or reduction gear, or (at constant speed) by shifting of the counterweight and varying the minimum opening of the gate.

Tell-tales of some kind should be installed on conveyors, elevators, feeders, chutes, bins and the like to warn of failure of function. The principle underlying substantially all of them is a lever actuated by the ore, the other end of the lever actuating a bell, light, etc. Usually, with moving streams, a weighted down leg above the stream hangs vertically at rest when no stream is running, and in this position closes an electric circuit which energizes the signal; the level of the running stream is high enough to strike the down leg and impart sufficient horizontal motion to open the circuit. Obvious modifications warn of a bin overload or underload; with a bucket elevator the tell-tale is usually installed either in the feed or discharge chute.

23. AUTOMATIC WEIGHING DEVICES

Besides maintaining constancy in weight of a stream of material, it is often desirable to secure a record (whether or not at constant rate) of the tonnage in transit or delivered. Such information is advantageous: (*a*) for ascertaining the total tonnage per day or other unit of time delivered to a section or the whole of a mill, or to any individual machine (such as a grinding mill); (*b*) for maintaining constant proportions in a mixture of two or more materials, as of ore, fuel, and fluxes at a smelter, or of limestone and shale at a cement plant; (*c*) for recording the weight of a given batch of ore, as at a sampling mill.

Hardinge Feedometer (Fig. 123) employs the same method for maintaining constant rate as the Hardinge constant-weight (Fig. 122) feeder, with the addition of automatic devices to perform any or all of the following functions: (*a*) indicate rate of feed in any desired units; (*b*) totalize tonnage delivered during any elapsed time; (*c*) furnish a printed record of that total, itemized as to batches, if required; (*d*) trace a continuous record of feed rate on a chart covering a month's operation; (*e*) permit remote control of feed rate; (*f*) provide, through interlocking, for maintaining a fixed ratio between the rates of two or more feeders, and trace their individual rates on the same record; (*g*) stop the feeder, and record, upon failure of ore supply, resuming automatically when feed is restored. Other adjuncts include track mounting, whereby one feeder may serve multiple outlets; a magnetic pulley for tramp iron, a metal belt for hot materials, completely enclosed housing for dusty or corrosive atmosphere, or when the feeder is required to work at either above or below normal atmospheric pressure. The machine is made in three sizes adapted to 2-, 4-, and 12-in. material, at corresponding maximum capacities (based on 85 lb. per cu. ft.) of 12, 150, and 500 t.p.h. Extreme range in rate adjustment (the minimum being as small as desired) is 3 : 1 through variable-speed belt drive alone, or 6 : 1 when such drive is combined with a two-speed motor.

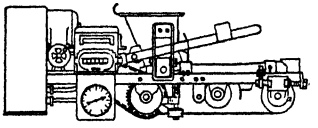

FIG. 123. Feedometer.

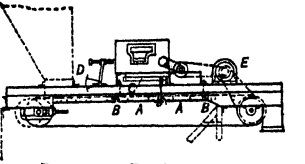

FIG. 124. Feedoweight.

Merrick Feedoweight (Fig. 124) is a short (9 1/2- to 12 1/4-ft.) flat belt conveyor having the central portion of its upper run carried on a group of idlers which are mounted on two (sometimes only one) articulated supports *A*. Opposite ends of these supporting frames are hinged at *B*, while the adjoining ends are linked to the scale beam *C* communicating with adjustable counterpoises. Uniform rate of discharge from the hopper is maintained by the gate *D*, the position of which is mechanically adjusted through reducers and reversible clutch from the main driving motor *E*, power to which is controlled by the scale mechanism in response to variation in the load on the belt. The device includes a rate indicator, a totalizer, and a recorder. It is designed for belt widths of 16 to 48 in.

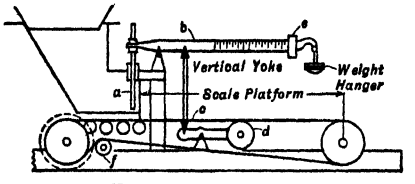

FIG. 125. Poidometer.

Schaffer Poidometer, shown diagrammatically in Fig. 125, is designed to feed materials at a constant rate, by weight, and register the total amount handled by attaching the feed gate *a* to one end of a scale beam *b*, the other arm of which is weighted by the running load on conveyor *c* passing over roller *d* at the exact center of the weighing section of the belt. Setting is effected by sliding weight *e*. At a given setting, an excess of material on the belt depresses the roller, elevates the yoke and scale beam, lowers the gate, and reduces the flow of material, and *vice versa*. The weighing and recording functions involve a correlation (not shown)

between the weighing roller and the measuring roller *f*, the latter serving both as revolution counter and as a snub pulley for the drive.

Richardson Convey-O-Weigh is a self-testing combination of conveyor and automatic weigher; it weighs and registers a pre-set quantity of loose material at every cycle and conveys that definite quantity in nearly a continuous stream to any desired destination. It consists of five main elements and various accessories: (*a*) main supporting steel frame; (*b*) feed hopper and feed conveyor unit; (*c*) scale levers hung on shackles carried on cross-members of the main frame; (*d*) weighing conveyor unit hung on four rods and shackles from the scale levers; (*e*) beam box with graduated scale lever, hanger weights, sliding poises, electrical controls, etc. The machine receives its supply from any convenient overhead source; the feeder, driven by its own motor and speed-reduction unit, feeds material to the weighing conveyor. When the pre-set weight has been delivered to the weighing unit, the scale beam rises, tips a mercury switch which opens the circuit to the motor driving the feed conveyor, and thus stops the supply of material. The feed conveyor operates intermittently while the weighing conveyor runs continuously (unless otherwise specially arranged). The weighing conveyor is driven by its own motor and speed-reduction gearing. After a certain amount of material has run off the end of this conveyor, the weighted end of the scale beam descends, closing the mercury switch and restarting the feed conveyor.

24. DISTRIBUTORS

It is almost invariably necessary to split the stream of ore passing through a mill at some point or points in its flow in order to distribute the parts to parallel treatment processes; thus the product of a primary breaker must, frequently, be sent to two or more secondary breakers; the product of intermediate crushing to a battery of grinding machines, and the product of one grinding machine to a battery of concentrators. The method employed for distribution of moving streams depends primarily upon accuracy required. CRUDE SPLITTING may be done by spreading the stream into a shallow and roughly rectangular section and then inserting diverting vanes; at the central point, if halving is desired, etc. ACCURATE SPLITTING may be effected by the method employed in many mechanical samplers (Sec. 19), *i.e.*, by contracting the stream to a substantially equi-dimensional section and delivering it to a compartmented vertical drum, either the drum or the delivering mechanism being made to revolve on a vertical axis in such relation to the other that when the dividing walls cut the stream the stream is flowing substantially in the plane of the wall.

Coarse material. Except in sampling, distribution of streams of coarse material rarely requires accurate splitting; for crude work the stream from a chute, conveyor, or the like is allowed to fall freely onto the upper edge of vertical partition walls between fixed chutes. Only a two-way split makes any approach to accuracy owing to the fact that the center of the stream flows most rapidly and is coarsest. Bins with multiple gates are probably best for distribution of coarse dry material to a number of parallel machines.

Launder splitting is frequently employed for fine fluid pulps. The simplest arrangement is to fork the launder and place a hinged metal plate extending the partition wall upstream; this may be moved until the desired proportion passes down each fork before fastening into place. Multiple splitting is best effected by repetition of two-way splits. For methods by UTAH COPPER CO., see Art. 16.

Stationary pulp distributors (OVERFLOW TYPE) divide a stream by first collecting it all in one receptacle and then discharging radially through as many outlets as required. Accuracy depends upon the thoroughness of the preliminary mixing and upon impartiality as between the several outlets.

At a ST. JOSEPH LEAD CO. mill at Flat River, Mo. (*IC 6658*), primary and some secondary flotation feed (3,800 dry t.p.d.) is divided among 23 cells by a stationary distributor of overflow type. The pulp contains 20% solids, all <65-m. and 54% <325-m. Feed enters vertically at the bottom of a conical tank, 9 ft. across the top, through a 16-in. pipe leading from a surge tank at slightly higher elevation, and overflows through 24 rectangular holes around the rim of the cone, just below its edge. Partitioned receptacles form a ring 12 in. wide around the top, each delivering through a 4-in. pipe in its bottom. Uniformity of distribution is assisted by a perforated cylindrical baffle surrounding the inlet at the apex

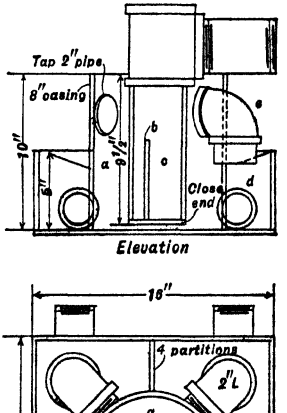

FIG. 126. Wet-pulp distributor, overflow type.

of the cone, and another, larger and unperforated cylindrical baffle of which the upper edge is higher than the outlets.

A 4-way pulp distributor for capacities up to 3 t.p.h., having no moving parts, and capable of construction in any mill shop, is shown in Fig. 126 (*136 J 188*). Equality of distribution is gained by imparting a vortex motion to the pulp, which enters the distributing chamber *a* through two tangential $1/2 \times 5$-in. slots *b* in the wall of the 3-in. delivery pipe *c*, closed at bottom. Flow through any one (or more) of the 2-in. outlets *d* can be stopped by simply turning the loosely threaded elbow *e* upward, whereupon the remaining outlets automatically redivide the whole stream. At SHERRITT-GORDON 5,000 (dry) tons of ore a day, in pulp containing 45% solids (70% <200-m.), is distributed to its flotation units by terminating the pump line from the classifiers in the bottom of a vertical section of 10-in. pipe having 2×12-in. slots spaced around its wall, each discharging into a separate pocket.

Revolving pulp distributor consists of a circular, usually conical, vessel, suspended vertically, free to rotate about a central axis, and having two or more orifices near its lowest point. The issuing streams successively traverse partitioned compartments arranged in a ring, each compartment having its separate outlet. Accuracy depends largely upon the manner in which the whole pulp is delivered to the revolving vessel; the orifices are usually so proportioned to the rate of feed as to maintain a considerable depth of pulp above them. Rotation may be mechanical or self-induced by application of the Archimedes principle.

At WRIGHT-HARGREAVES (*140 #4 J 37*) a mixture of primary classifier overflow and tube-mill product is divided among six bowl classifiers by a self-actuated revolving distributor. This consists of a vertical cylindrical tank, 3×3-ft., with conical bottom, suspended by a central shaft which is welded at the bottom and supported at top in such a manner (an old Wilfley pump unit) as to be free to rotate. Near the bottom of the cone are four equally spaced tangential outlets (6-in. elbows). Surrounding and attached to the central shaft is a rubber-covered spiral flight 16 in. in diameter, on which the incoming pulp impinges; this, together with the back pressure developed by the outlets, provides the necessary motive power. A circular launder with six adjustable gates receives and distributes the discharge.

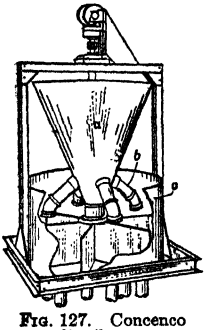

FIG. 127. Concenco distributor.

At the Pecos mill of AMERICAN METAL CO. (*IC 6605*) classifier overflow was divided between two flotation units by a self-actuated distributor. It consisted of a 24(diam.)$\times$18-in. cast-iron tub suspended by a vertical central shaft and rotating at 18 r.p.m. Four equidistant 4-in. holes in the wall, close to the bottom, were bushed for 2 1/2-in. nipples and 90° elbows, the latter discharging backward and about 45° downward. Feed entered through a vertical tube surrounding the suspension shaft, delivering at 6 in. above the bottom of the tub, the pulp in which usually stood about 12 in. deep. No method of feeding from an inclined spout was found to give accurate distribution; too large an outlet was also undesirable. The outside collecting receptacle had four compartments, each with 5-in. flanged outlet, each pair of opposite outlets feeding one flotation unit.

Concenco revolving distributor (Fig. 127) comprises a conical hopper *a*, 3 ft. across the top, supported at the bottom on a sealed step-bearing, and revolved by a central vertical shaft driven by worm gear from a 1/3-hp. motor. Pulp enters the top of the cone as near the center as practicable and discharges through four downward-pointing outlets *b*. The lower half-depth of the splitting tank *c*, the wall of which is 2 ft. high, is divided by radial partitions into as many segments (2 to 10) as desired, each segment having its separate bottom outlet.

Fine dry ore. The method illustrated in Fig. 128 is adopted in the magnetic separating department of the Franklin mill (N. J. ZINC CO.) for insuring equal distribution of fine, dry ore to a number of screens operating in parallel. Each screen is fed by its own roll or "star" feeder 6 (see Fig. 113), all rotated at the same speed by a common shaft driven by variable-speed motor. Supply is delivered to the hoppers of these feeders through openings in the bottom of a horizontal scraper conveyor, each hopper being kept level full. The hopper of the last feeder of the group has the construction shown in section in Fig. 128. It is pivoted at *2*, and normally held vertically by the spring *5* and the counterweighted arm *7*. If, at their momentary speed, the preceding feeders are unable to dispose of their allotments, the surplus arrives at this tilting hopper, depresses it, and through the connecting-rod *3* and rheostat *4* increases the speed of the motor driving all feeders. When the tilting hopper is relieved of its overload, it tends to return to its normal position and speed is correspondingly reduced.

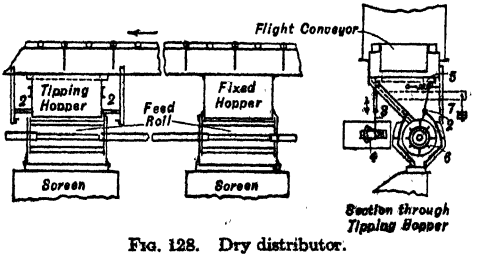

FIG. 128. Dry distributor.

SECTION 19

SAMPLING AND TESTING

SAMPLING

BY

HENRY A. BEHRE, FORMERLY ASSISTANT PROFESSOR OF MINING, SHEFFIELD SCIENTIFIC SCHOOL, YALE UNIVERSITY

REVISED BY

M. D. HASSIALIS, ASSOCIATE IN MINERAL DRESSING, SCHOOL OF MINES, COLUMBIA UNIVERSITY

TESTING

REVISED BY

M. D. HASSIALIS

ART.		PAGE
	SAMPLING	
1.	Principles of sampling	01
2.	Hand sampling	24
3.	Sampling machines	32
4.	Tonnage and moisture determination	50
5.	Mill sampling	53
6.	Custom sampling mills	63
7.	Preparing samples for assay	68
8.	Cost of sampling	71
	TESTING	
9.	Optical	72
10.	Chemical and electrical	94
11.	Resistance to comminution	95
	SIZE TESTING	
12.	Screen analysis	100
13.	Elutriation with liquids	109
14.	Elutriation with air	113
15.	Microscopic sizing	118
16.	Sizing by sedimentation	120
17.	Surface measurement	126
18.	Particle size	139
19.	Presentation of sizing tests	145
	GRAVITATIONAL TESTING	
20.	Sink-float separation	150
	TESTS OF MACHINES AND PROCESSES	
21.	Testing for a flowsheet	155
22.	Ore-testing apparatus and procedures	163
23.	Testing for amalgamation and cyanidation	187
24.	Milling calculations	189

1. PRINCIPLES OF SAMPLING

Sampling is the operation of removing a part, convenient in size for testing, from a whole which is of much greater bulk, in such a way that the proportion and distribution of the quality to be tested (*e.g.*, specific gravity, metal content, recoverability) are the same in both the whole and the part removed (SAMPLE). The conditions of the more stringent definition, that the sample shall be completely representative of the whole as regards all aspects save bulk, are practically never fulfilled when heterogeneous mineral mixtures are sampled.

Elements of sampling problem are: (1) precise definition of the quality to be tested, (2) character of the quality under test, (3) character of the material to be sampled, (4) relation of the quality to be tested to the material to be sampled, (5) character of the sample necessary to supply the information as to the quality about which information is desired, (6) degree of accuracy necessary, (7) way in which the parent lot occurs, (8) sample size required for (*a*) testing and (*b*) to satisfy, theoretically, the standard of accuracy and the desired degree of assurance, (9) method of taking the sample, and (10) mechanism for taking the sample in accord with (9).

Sampling theory has for its objects the exposition of the determinative variables of the operation, and explanation of their interdependence, with the ultimate object of controlling sampling operations and predicting their results. In this respect, present-day theory is in rudimentary form, applicable only to a highly idealized technique. PERFECT SAMPLING TECHNIQUE is assumed to yield samples such that any deviations from complete representation of the quality to be tested in the sample are ascribed to chance causes. For example, if a sphalerite-chert mixture was sampled with perfect technique, it would not be required that the sample have the same zinc assay (the quality under test) as the original mixture, but merely that the difference between the zinc assay of the whole and that of the sample was due to chance causes. With this stipulation the theory of probability may be applied to the problem of sampling.

Application. Count 250 black beans (used to denote valuable mineral particles) and 750 white beans (used to denote gangue particles) into a container, mix the contents, and withdraw 100 beans as a sample. The probability that the sample will assay 25% (*i.e.*, will contain 25 black beans) is the ratio of the total number of 100-bean samples containing 25 black beans to the total number of ways in which 100 beans can be taken from 1,000 beans. The number of combinations of 1,000 objects taken 100 at a time is given by C^{100}_{1000} = 1000!/100! 900!. The number of ways in which 25 black beans can be taken from 250 black beans is, similarly, C^{25}_{250} = 250!/25! 225!. But for each of these methods of taking 25 blacks from 250 blacks there are C^{75}_{750} ways of taking 75 white beans from 750 white beans. Hence the total number of ways of taking 25 blacks and 75 whites from the original mixture is $C^{25}_{250} \times C^{75}_{750}$ = 250!/25! 225! × 750!/75! 675!. Therefore the probability P that the random sample will assay 25% is

$$P = \frac{C^{25}_{250} \times C^{75}_{750}}{C^{100}_{1000}} = 0.0968 \qquad (1)$$

This means that if 10 samples were taken from the lot (replacing the previous sample each time before resampling) 0.968 or approximately 1 out of these 10 would have the same assay as the whole; 9.7 out of 100 would give correct assay; approximately 97 out of 1,000, etc.

Table 1. Probability *vs.* performance in sampling mixtures of 250 black and 750 white beans *c*

1	2	3	4	5
Assay, % black	Probability of assay *a*	Number of samples		
		From Col. 2	Observed	From normal law *b*
15	0.00439	0.4	1	0.6
16	0.00823	0.8	1	1.0
17	0.0142	1.4	1	1.7
18	0.0230	2.3	2	2.5
19	0.0343	3.4	3	3.5
20	0.0479	4.8	5	4.8
21	0.0626	6.3	7	6.1
22	0.0766	7.7	8	7.3
23	0.0880	8.8	8	8.3
24	0.0951	9.5	10	8.9
25	0.0968	9.7	10	9.2
26	0.0929	9.3	9	8.9
27	0.0843	8.4	8	8.3
28	0.0723	7.2	7	7.3
29	0.0587	5.9	6	6.1
30	0.0451	4.5	4	4.8
31	0.0329	3.3	3	3.5
32	0.0228	2.3	2	2.5
33	0.015	1.5	2	1.7
34	0.00937	0.9	1	1.0
35	0.00557	0.6	1	0.6
36	0.00315	0.3	0	0.2
37	0.00170	0.2	1	0.1
		99.5	100	98.9

a By Eq. 2.
b $P = C^{\alpha}_{\alpha+\beta} p^{\alpha} q^{\beta}$ where $p = 0.25$ and $q = 0.75$.
c Based on 100 @ 100-bean samples.

Eq. 1 can be generalized in the form

$$P = \frac{C^{\alpha}_{a} \times C^{\beta}_{b}}{C^{\alpha+\beta}_{a+b}} \qquad (2)$$

where a = number of mineral particles in the whole, b = number of gangue particles in the whole, and α and β equal respectively the number of mineral and gangue particles in the sample. Using this generalized equation, the probability that a random sample will assay any given percentage of valuable mineral may be calculated.

Test results (T. Morris and M. Hassialis, *CU*) are shown in column 4 of Table 1, compared with calculated predictions according to two statements of probability. Fig. 1 is a graphical comparison. Agreement was reasonably close; it would have been excellent for 1,000 samples.

Size of sample, finite lot. The larger the sample taken, the smaller the probability of its complete accuracy, but the greater the probability that the error will be small. Thus the probability that a random sample of 200 beans from the lot of 1,000

tested will have a correct assay is 0.0727; for a 400-bean sample it is 0.0594. A change of one particle in a 40-particle sample produces a change of 2.5 units in the assay, in a 100-particle sample the change is one unit, for a 200-particle sample it is 0.5 units, in general the change in assay is $100/n\%$, where n is the number of particles in the sample. Consequently increasing the sample size increases the number of values that the assay of the sample may have, and it follows that the probability of hitting a particular assay with a random sample will decrease. On the other hand, the probability that a random sample will have an assay between, *e.g.*, 23.99% and 26.01% increases as the size of the sample increases. Thus for a 40-particle sample the only assay lying within this range is 25%, found when the sample contains 10 mineral particles. The probability that the assay lies between 23.99% and 26.01% is therefore the probability that the assay is 25%; this is 0.153. But for a 100-particle sample, the assays in the range are 24, 25, and 26% and the corresponding probabilities are 0.0951, 0.0968, and 0.0929, a total of 0.285. For a 400-particle sample the following assays lie in the range: 24.00, 24.25, 24.50, 24.75, 25.00, 25.25, 25.50, 25.75, and 26.00; their corresponding probabilities are 0.050, 0.054, 0.057, 0.0588, 0.0594, 0.0587, 0.0568, 0.0536, 0.0496; the sum is 0.4979.

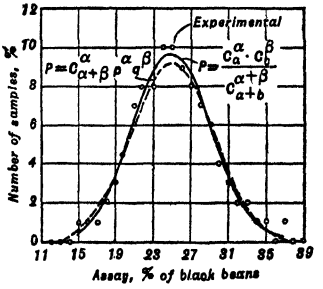

FIG. 1. Probability *vs.* performance in sampling (see Table 1).

Binomial equation of probability. Calculation of sampling probabilities by means of Eq. 2 is difficult when the original mixture contains a large number of particles, and impossible when this number becomes infinite. For a lot containing an infinite number of particles, the probability p of taking a mineral particle is unaltered by any previous sampling, the probability q of withdrawing a gangue particle is similarly constant. The probabilities p and q are the proportions of mineral and gangue particles in the infinite lot. The probability P that a sample of n particles taken at random will contain m mineral particles and $n - m$ gangue particles is given (Uspensky, *Introduction to Mathematical Probability*, McGraw-Hill, Chap. 3) by

$$P = C_n^m p^m q^{n-m} \qquad (3)$$

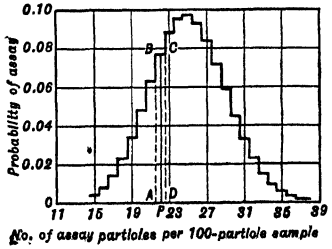

FIG. 2. Probability polygon of test results (see Table 1).

The right-hand member of Eq. 3 is, by inspection, a term of the expanded binomial $(p + q)^n$. For low values of n, when $p \neq q$, the polygon of the binomial is asymmetric, but does not coincide with the asymmetric polygon given by Eq. 2 (see Fig. 1); when $p = q$ the binomial polygon is symmetrical, but still does not coincide with the polygon of Eq. 2. As n increases, both polygons become symmetrical and congruent regardless of the values of p and q. Calculation of sampling probabilities by means of Eq. 3 becomes impossible when sample size is large, because it involves such large factorials and is a discontinuous function, as is shown in Fig. 2, where the individual probabilities of Table 1 are plotted as ordinates P at unit assay-particle intervals on the assay axis. Intermediate values on the assay axis have no physical significance.

Approximation of probabilities. A rectangle of unit width, *e.g.*, *ABCD*, erected as shown (Fig. 2) upon each ordinate has an area equal to the probability of the corresponding assay value. Omitting the vertical sides of the rectangles, the histogram shown in the figure is obtained. This has the properties (*a*) that the area under each step is the probability that the corresponding assay value will be obtained, and (*b*) that the total area under the histogram is unity. As the sample size increases, the proportional width of each step decreases until finally the histogram approaches a continuous curve. The symmetrical polygon or histogram may be approximated very closely by a continuous function. The analytic expression of this function involves a somewhat different method of plotting, as follows: the maximum probability (maximum ordinate of Fig. 2) is determined, and the corresponding value of m (most probable assay) is noted. All ordinates y are then expressed as fractions of the maximum probability, and abscissae x are expressed as deviations from the mean number of mineral particles. For example, if 0.0968 is the maximum probability and 25 the mean number of mineral particles, then a probability of 0.0929 for 26 mineral particles will now be plotted by $y = 0.0929/0.0968 = P/P_0$ and $x = 26 - 4 = 1$. When so plotted the approximation function y is given by

$$y = \frac{P}{P_0} = e^{-x^2/2npq} = e^{-x^2/2\sigma^2} \qquad (4)$$

where σ = standard deviation = $\sqrt{npq}$ (see Yule and Kendall, *An Introduction to the Theory of Statistics*, C. Griffin & Co. Ltd.; p. 179) and P_0 is the probability of the most probable assay. The area under this curve is equal to $\sigma\sqrt{2\pi}$, hence to make the area under the curve unity Eq. 4 must be divided by $\sigma\sqrt{2\pi}$ which gives a new function Y as

$$Y = \frac{y}{\sigma\sqrt{2\pi}} = P/P_0\sigma\sqrt{2\pi} = e^{-x^2/2\sigma^2}/\sigma\sqrt{2\pi} \tag{5}$$

and

$$P = \int_{x_1}^{x_2} Y dx \tag{6}$$

For each value of the standard deviation σ (a constant for any given values of n, p, and q) a different curve is generated by Eq. 6. For increasing values of σ the base of the curve increases and its peak flattens out, though the area under the curve remains unity. All such curves have in common the property that the same proportion of the area is contained between the same deviation limits (expressed in terms of the standard deviation). For example, in all such curves 50% of the area is found between $x = \pm 0.6745\sigma$, 68.27% of the area between $x = \pm\sigma$, 95.45% between $x = \pm 2\sigma$, and 99.73% between $x = \pm 3\sigma$.

Sample size, infinite lot. If instead of the number of mineral particles, the proportion of mineral particles in the sample is used, the standard deviation of the proportion of mineral particles in the sample $\sigma_p = \sqrt{pq/n}$. If the mineral particles have a specific gravity δ_1 different from the specific gravity δ_2 of the gangue particles, the standard deviation on a weight basis σ_w may be calculated as follows: Let a = per cent. of mineral (by weight) in the whole; then assuming mineral and gangue particles have the same size and shape

$$a = \frac{100p\delta_1}{p\delta_1 + q\delta_2} = \frac{100p\delta_1}{\delta_2 + p(\delta_1 - \delta_2)}$$

Since (Brunt, *The Combination of Observations*, Cambridge; p. 48)

$$\sigma_w = \frac{da}{dp}\sigma_p; \quad \sigma_w = \frac{(100 - a)\delta_1 + a\delta_2}{100\sqrt{\delta_1\delta_2}}\sqrt{\frac{a(100 - a)}{n}} \tag{7}$$

Example. To compute the size of the sample that should be taken such that its assay will be within 0.2% of the true assay, say 5%, with a probability of 0.99.

If the mixture is chert and sphalerite, $\delta_1 = 4.0$ and $\delta_2 = 2.6$. From Eq. 7

$$\sigma_w = \frac{95 \times 4 + 5 \times 2.6}{100\sqrt{4 \times 2.6}} \times \frac{\sqrt{5 \times 95}}{\sqrt{n}} = \frac{26.8}{\sqrt{n}}$$

Now derive the value of σ_w to find what the deviation limits, expressed in terms of the standard deviation, must be in order that the area under the curve between these limits will be 99% of the total area. Table 2 will facilitate the calculation; it is calculated for a standard deviation of unity. To use it in the present problem enter at the probability 0.99 and read $X = 2.576$. Since $X = x/\sigma$, the standard deviation $\sigma_w = 0.2/2.576 = 0.078$. Substituting in the preceding equation and solving, $n = 117{,}650$. Assuming 1-in. particles of an average weight of 0.051 lb. (the error involved in averaging particle weights is within the limits of error of the estimate), the weight of sample necessary to give an assay within the range $5 \pm 0.2\%$, 99 times out of 100 is $117{,}650 \times 0.051 = 6{,}000$ lb. If the particles were, say, 100~150-m., the sample weight necessary to give an assay within the prescribed limits with the same degree of assurance would be 0.0007 lb.

Table 2. Probability P, *vs.* deviation X, relative to unit standard deviation

P	X	P	X
0.90	1.645	0.97	2.170
0.91	1.705	0.98	2.326
0.92	1.750	0.99	2.576
0.93	1.812	0.999	3.291
0.94	1.881	0.9999	3.890
0.95	1.960	0.99999	4.417
0.96	2.054	0.999999	4.892

Application of probability theory to actual sampling. The results of the theory above developed are applicable only to large nonsegregated mixtures of particles of pure minerals sampled with perfect sampling technique, a situation which has no practical counterpart. In practice, the particles of the mixture have a wide range of composition, are usually of large size range, values are invariably segregated, the sample is ordinarily a composite of a number of smaller samples or increments, and stage sampling at different sizes may have been used. A workable sampling theory must be able to take these factors into account.

Variation in composition of individual particles may be taken into account as follows: Divide the material into a number of density fractions (*e.g.*, sp. gr. 2.6 to 2.8) d_1, d_2, d_3, $\cdots$ etc., varying from the density of pure sphalerite to that of pure chert inclusive; let p_1, p_2, p_3, $\cdots$ etc., denote the propor-

tion (= probability p that a single particle taken from a parent lot of infinite numbers will belong to this density fraction (p. 03)) of particles in each density fraction with corresponding assays a_1, a_2, a_3, $\cdots$ etc. If a denotes the over-all assay then

$$a = \frac{p_1 d_1 a_1 + p_2 d_2 a_2 + \cdots}{p_1 d_1 + p_2 d_2 + \cdots} \tag{8}$$

If σ_1, σ_2, σ_3, $\cdots$ etc., are the standard deviations of the corresponding density fractions d_1, d_2, d_3, $\cdots$ etc., then

$$\sigma_j = \sqrt{\frac{p_j(1 - p_j)}{n}} \tag{9}$$

where the subscript j denotes any density fraction. The standard deviation σ of the assay a is given (Brunt, *loc. cit.*, p. 169) by Eq. 10.

$$\sigma^2 = \sum_j \left(\frac{\delta a}{\delta p_j}\right)^2 \sigma_j^2 + \sum_k \sum_l c_{kl} \left(\frac{\delta a}{\delta p_k}\right)\left(\frac{\delta a}{\delta p_l}\right) \sigma_k \sigma_l \tag{10}$$

When $k = l$, terms of the double summation are omitted. The coefficient of correlation c_{kl} for the pair of density fractions k, l, is given (Yule and Kendall, *loc. cit.*, p. 395) by

$$c_{kl} = -\frac{p_k p_l}{n \sigma_k \sigma_l} \tag{11}$$

Eq. 10 is an approximation applicable when the deviations of the p's are small; the complete equation contains higher-order terms of the Taylor expansion (see Worthing and Geffner, *Treatment of Experimental Data*, John Wiley & Sons, p. 208). The values of p_j, d_j, and a_j may be determined from a sorting-assay test. Using these values, σ_j and σ may be calculated from Eqs. 9 and 10 respectively, the latter being given in terms of the unknown n. From the desired degree of assurance for the prescribed limits of error in assay, σ may be calculated from Eq. 6 and n then calculated.

Example. To compute the size of sample that should be taken such that its assay will be within 0.2% of the true assay, say 5%, with a probability of 0.99; the mixture having a density distribution as follows: A sphalerite fraction, 0.15% by weight with an average density = 4.00, a middling fraction, 70.85% by weight, average density = 2.71; a chert fraction, 29.00%, average density = 2.65. The results of the various steps in the calculation are given under Example 1, Table 3. (For explanation of table see p. 06.)

Assuming 1-in. particles, a sample weight of 249 lb. is calculated. By a comparison of the figure with that obtained on p. 04 it appears that the effect of "locked" particles upon sample size is to reduce it. A similar result is reported by Manning (*9 JIF 132*), who calculated for a 1-in. mixture of coal (p_1 = 80.1, d_1 = 1.3, a_1 = 1.7), middling (p_2 = 8.5, d_2 = 1.5, a_2 = 10.8), and dirt (p_3 = 11.4, d_3 = 2.2, a_3 = 67.7) that a sample containing 3,075 particles, weighing 77 lb., is required in order that the sample shall not deviate from the true assay of 10% ash by more than ±1% (10 ± 1%) more often than one time per hundred. For a mixture of pure coal and pure dirt 9,950 particles, or a weight of 249 lb., is required under the same conditions.

Variations in composition and size may be taken into account in similar fashion by computing the contributions to the standard deviation of the sample assay (Eq. 9) made by changes in the proportions of different density fractions in a given size fraction, and to changes in the proportion of the size fractions, and proceeding as before. Thus let the material be divided, by means of a sizing-sorting test, into N density fractions d_1, d_2, $\cdots$ d_n, and each density fraction be divided into M size fractions of average diameter D_1, D_2, $\cdots$ D_m; this test yields MN products. Let w_{ij} denote the weight per cent. of material belonging to the ith size fraction and the jth density fraction; similarly the corresponding assay and proportion of particles by number will be denoted by a_{ij} and p_{ij}. The assays are given, if a sizing-sorting-assay test has been made; in the case of binary mixtures the assays may be computed, for approximate work, by means of

$$a_{ij} = \frac{d_v(d_{ij} - d_g)100}{d_{ij}(d_v - d_g)} \tag{12}$$

where d_v = density of valuable mineral, d_g = density of gangue. The proportion of particles in the i-j fraction p_{ij}, may be calculated from

$$p_{ij} = \frac{w_{ij}/D_i^3 d_j}{\sum_{ij}(w_{ij}/D_i^3 d_j)} \tag{13}$$

The over-all assay a of the sample is calculated from

$$a = \sum_{ij} D_i^3 p_{ij} d_j a_{ij} / \sum_{ij} D_i^3 p_{ij} d_j \tag{14}$$

and the standard deviation σ_{ij} of the i-j fraction by

$$\sigma_{ij} = \sqrt{p_{ij}(1 - p_{ij})/n} \tag{15}$$

The standard deviation σ of the sample assay is given by

$$\sigma^2 = \sum_{ij}\left(\frac{\delta a}{\delta p}\right)^2_{ij}\sigma^2_{ij} + \sum_{ij}\sum_{i'j'}c_{ij,i'j'}\left(\frac{\delta a}{\delta p}\right)_{ij}\left(\frac{\delta a}{\delta p}\right)_{i'j'}\sigma_{ij}\sigma_{i'j'} \qquad (16)$$

where terms of the double summation, in which $i, j = i', j'$, are omitted. The correlation coefficient $c_{ij,i'j'}$ is given by

$$c_{ij,i'j'} = -p_{ij}p_{i'j'}/n\sigma_{ij}\sigma_{i'j'} \qquad (17)$$

The calculations, though tedious when the sizing-sorting test yields a large number of products, present no particular difficulty.

Example. Example 2 of Table 3 gives the results of a sizing-sorting test on a sphalerite-chert ore, in which the material was divided into 30 fractions. A sample weight of 35 lb. is computed.

Explanation of Table 3. Fractions of sizing-sorting or simple sizing or sorting tests are labeled with two-digit figure; the first digit represents the size fraction to which the product belongs, the second the density fraction. Col. 3 gives the assays a_{ij} of the fractions. The proportion of particles in each fraction appears in Col. 9; these are obtained by dividing each member of Col. 8 by the sum of the same column, as in Eq. 13. Cols. 6, 7, and 8 represent computational steps required to compute Col. 9. Cols. 10 to 15 represent the different steps in the calculation of the partial differentials $\left(\frac{\delta a}{\delta p}\right)_{ij}$ in Col. 16. These come from Eq. 18, which gives the partial differentials of Eq. 14 with respect to p_{ij}.

$$\frac{\delta a}{\delta p_{ij}} = \left\{\left[\sum_{ij}D_i^3p_{ij}d_j\right]D_i^3d_ja_{ij} - \left[\sum_{ij}D_i^3d_jp_{ij}a_{ij}\right]D_i^3d_j\right\}\Big/\left[\sum_{ij}D_i^3p_{ij}d_j\right]^2 \qquad (18)$$

The first bracketed term of the numerator in Eq. 18 is the sum of Col. 10; the second bracketed term of the numerator is the sum of Col. 11; the first term of the numerator is given by Col. 13, the second term is in Col. 14 and their difference is Col. 15. The partial differentials in Col. 16 are obtained by dividing the members of Col. 15 by the square of the sum of Col. 10 as is required by Eq. 18. The ratio of the sums of Cols. 11 and 10 gives, according to Eq. 14, the over-all assay (composite of Col. 3; see Art. 18) and thus provides the computer with a partial check on calculations. Col. 18 is computed from Col. 9 by means of Eq. 15. The sum of Col. 19 yields the first member of the right-hand side of Eq. 16 divided by n. To compute the second term of this equation, a simpler, symmetrical, and equivalent term, obtained by substituting the value for $c_{ij,i'j'}$ given by Eq. 17, is determined, as:

$$\sum_{ij}\sum_{i'j'}c_{ij,i'j'}\left(\frac{\delta a}{\delta p_{ij}}\right)\left(\frac{\delta a}{\delta p_{i'j'}}\right)\sigma_{ij}\sigma_{i'j'} = -\frac{1}{n}\sum_{ij}\sum_{i'j'}\left(p_{ij}\frac{\delta a}{\delta p_{ij}}\right)\left(p_{i\,j'}\frac{\delta a}{\delta p_{i'j'}}\right) \qquad (19)$$

Cols. 20 and 21 are the computational steps required to calculate the right-hand side of Eq. 19, which is given by Col. 22. Total of Col. 20 should be zero, if a sufficient number of significant figures is carried in relation to the magnitudes of the numbers in Cols. 9 and 16. The sum of Col. 22 is the second right-hand term of Eq. 16. $n\sigma^2$ may now be calculated from this equation. (See *Solution.*) Eq. 6 is used to calculate σ from the conditions imposed as to assurance and deviation limits as in example on p. 04, and this value squared is substituted above to determine n. Sample weight is computed using the same assumption as to particle shape as was used in Eq. 13. The weight of the i-j product is given by $\frac{62\cdot4\pi}{6\times1728}D_i^3d_jnp_{ij}$ lb. where D_i is in inches. Col. 23 is the product of Col. 9 and n, and gives the number of particles in each fraction. Col. 24, obtained by multiplying Col. 10 by n, gives $np_{ij}D_i^3d_j$, and its sum, when multiplied by the constant factor 0.0189, gives the weight of the sample in pounds. If the distribution of the weight is of no interest, weight may be found directly by multiplying the sum of Col. 10 by $0.0189n$.

Variability. A mathematical investigation of Eq. 16 and the effect thereon of changes in the variables is beyond the scope of this article. One conclusion of practical importance, drawn from such an investigation, is that the effect of a fraction upon sample weight depends upon the variability $(a_{ij} - a)$, *i.e.*, the greater the deviation of the fraction assay from the over-all assay, the greater is its effect upon sample weight. Exs. 3, 4, and 5 of Table 3 illustrate this effect. All three parent lots assay 5%. In Ex. 3 the material is divided into two fractions, one pure chert whose assay deviates from the sample assay by 5%, and a mixed fraction for which $(a_{ij} - a) = 0.49\%$; a sample weight of 20.1 lb. is required. The material in Ex. 5 is also divided into two fractions, one pure chert with $(a_{ij} - a) = 5\%$ but the other fraction is pure sphalerite for which $(a_{ij} - a) = 95\%$; hence a much larger sample weight, 5,810 lb., is required. In Ex. 4 the material is divided into three fractions for which $(a_{ij} - a)$ is 5, 0.49, and 38% respectively; hence an intermediate sample weight (436 lb.) should be and is required.

Effect of mixing materials of different sizes is an increase or decrease of sample weight according to whether the admixed size is coarser or finer than the original material. The extent of the change in sample weight is not proportional to the difference in sizes or any power thereof. This is illustrated by Exs. 3, 6, and 7 of Table 3. Comparing Exs. 3 and 6 it is seen that a 50–50 mixture of 1- and 0.5-in. material requires a sample weighing 11.3 lb., as compared with the 20.1-lb. sample required for 1-in.

material with similarly distributed values. A 50–50 mixture of 1- and 1/16-in. material with similarly distributed values requires a sample weight of 10.1 lb. (Ex. 7), only 1.2 lb. less than that of Ex. 6, although the admixed size of Ex. 7 is 1/8 that of Ex. 6. In other words, the coarse size is more effective than the fine size in controlling sample weight. If, as is the case with natural ores, the finer size has a larger variability than the coarse size, these conclusions must be modified accordingly.

Degree of assurance affects sample weight through its effect on the standard deviation of the sample. In general, sample weight increases slowly with an increase in the degree of assurance until a degree of assurance of about 0.999, thereafter the rate of increase of sample weight is very great. The following figures calculated for Ex. 4 of Table 3 are illustrative:

P.....	0.90	0.95	0.99	0.999	0.9999	0.99999	0.999999
W (lb).....	179	255	436	715	1,002	1,285	1,585

Permissible limits of assay similarly control sample weight through the standard deviation of the sample. In general, a decrease in deviation limits increases the sample weight, other things being equal. The increase in sample weight is slow at first but becomes very rapid as the limits decrease past 5% of the assay. The following sample weights were computed for Ex. 4 of Table 3:

Deviation limit.....	2.0	1.0	0.2	0.1	0.01	0.001	0.0001	
Limit (per cent. of assay)	40	20	4	2	0.2	0.02	0.002	
W (lb.).....	4.4	17.6	436	1,755	87.8T	8,780T	878,000T	(T = tons)

Ores containing two or more economic minerals are considered as binary ore mixtures, first with respect to one valuable mineral, then with respect to the other valuable mineral, and sample weight is computed as above. The largest sample weight thus computed is taken as the proper sample weight. Exs. 8 and 9 of Table 3 show the calculations for a galena-sphalerite-chert ore assaying 14.5% galena, 4.5% sphalerite, the values distributed as shown. Assuming the ore to be a binary mixture of galena and chert, a sample weight of 606 lb. is computed for the sample to assay 14.5 ± 0.2%, with a degree of assurance of 0.99. When the ore is considered as a binary mixture of sphalerite and chert, a sample weight of 1,027 lb. is computed for the same tolerance and assurance. (This larger sample weight required when zinc is the quality under test is due to the greater variability of the sphalerite values.) Hence if a weight of 1,027 lb. is taken, both Pb and Zn assays will be properly represented by the sample.

Stage sampling may be taken into account by calculating the standard deviation of the sample taken at each stage and compounding these deviations to give the standard deviation of the final sample as follows:

$$\sigma^2 = \sigma_1^2 + \sigma_2^2 + \cdots + \sigma_n^2 \qquad (20)$$

where σ_1, σ_2, $\cdots$ σ_n are the standard deviations of the samples taken at each stage. It follows from this equation that the permissible standard deviation of a sample at some particular stage is less than that of the final sample, *i.e.*, the sampling practiced at the various stages is and must be better than the over-all sampling. For example, if 8-in. material is to be sampled to yield a sample at 100-m. with $\sigma = 0.02$ and four stages are to be used, then $\sigma^2 = 0.0004 = 4\sigma_i^2$ (assuming $\sigma_1 = \sigma_2 = \sigma_3 = \sigma_4$) and $\sigma_i = 0.01$. It also follows that errors made in sampling at coarse sizes cannot be corrected by taking large samples at the smaller sizes.

Segregation cannot be taken into account by the theory developed above, for by its very nature it invalidates the basic assumption that deviations are due to chance causes. Although most heterogeneous materials exhibit variations in quality in all directions, the segregation in one, two, and sometimes three directions is marked. An example of unidirectional segregation is the car uniformly loaded with unsized ore which develops marked vertical segregation after transit (providing values are differently distributed in the coarse and fine sizes). A car loaded by a conveyor discharging a bin wherein vertical segregation exists might show longitudinal (or more complex horizontal) segregation, in addition to the vertical segregation produced by vibrations due to transit. Cars loaded directly from a bin might show more complex horizontal segregations with vertical axes of symmetry located at the loading points. Knowledge of the type of segregation existing in the lot to be sampled may be used to devise a sampling procedure which yields representative samples. Such sampling is variously known as biased, or purposeful, or increment sampling.

Increment sampling comprises removal from the parent lot of a number of increments which are composited to form the sample. The number of increments taken, their size, shape, and disposition in the parent body are determined by the known segregation of values and the rate of change of value with position (see p. 87). Correct increment sampling should produce a normal distribution curve when the assays of the individual increments are plotted against increment frequency. Probability theory is then applicable to correct increment sampling, for it may be safely assumed that the increments are independent, and that positive and negative assay deviations are equally likely.

Number of increments, n, that should be composited to give a sample whose assay shall be within prescribed limits with the desired degree of assurance may be calculated from Eq. 6 (*219 JFI 483; 222 ibid. 337*). Since the normal distribution law is symmetrical about the y-axis, Eq. 6 can be written as

$$P = \frac{1}{\sigma\sqrt{2\pi}} \int_{-x_1}^{x_1} e^{-x^2/2\sigma^2} dx = \sqrt{\frac{2}{\pi}} \int_0^{x_1} e^{-x^2/2\sigma^2} d\left(\frac{x}{\sigma}\right) \qquad (21)$$

Table 3. Solutions to sampling problems

Example No.	1 Fractions	2 Weight per cent., w_{ij}	3 Assays, a_{ij}	4 Density, d_{ij}	5 Average diameter, D_{ij}	6 (Col. 5)[3]	7 Col. 6×Col. 4	8 Col. 2/Col. 7	9 Proportion by number, r_{ij}	10 Col. 7×Col. 9	11 Col.10×Col.3	12 Col. 7× Col. 3	13 Col. 12× Σ Col. 10
1	11	29.00	0	2.65	1	1	2.65	10.950	0.295	0.782	0	0	0
	12	70.85	6.85	2.71	1	1	2.71	26.150	0.704	1.906	13.050	18.55	49.95
	13	0.15	100	4.00	1	1	4.00	0.0375	0.00101	0.004	0.404	400	1,076.0
	Σ	100.00						37.1375	1.00001	2.692	13.454		
Solution: $n\sigma^2 = 25.85 + 3.84 = 29.69$; but from Eq. 4, letting $P = 0.99$ and $x = 0.2$, $\sigma = 0.078$; therefore $n = 29.69/0.00608 = 4{,}885$; wgt. of sample = $13{,}160 \times 0.0189 = 248.8$ lb.													
2	11	15.30	0	2.65	1.000	1.00	2.650	5.78	0.000485	0.00129	0	0	0
	12	29.70	5.49	2.70	1.000	1.00	2.700	11.0	0.000923	0.00249	0.01367	14.8	0.124
	21	9.00	0	2.65	0.500	0.125	0.331	27.2	0.002280	0.000754	0	0	0
	22	20.49	5.49	2.70	0.500	0.125	0.338	60.7	0.005090	0.00172	0.00944	1.86	0.0156
	23	0.51	43.00	3.10	0.500	0.125	0.388	1.31	0.000110	0.0000427	0.00184	16.7	0.140
	31	3.96	0	2.65	0.250	0.0156	0.0414	95.7	0.00803	0.000332	0	0	0
	32	7.56	5.49	2.70	0.250	0.0156	0.0421	179.6	0.01507	0.000634	0.00348	0.231	0.00194
	33	0.36	43.00	3.10	0.250	0.0156	0.0484	7.44	0.000624	0.0000302	0.00130	2.08	0.0175
	34	0.12	71.90	3.50	0.250	0.0156	0.0546	2.2	0.000185	0.0000101	0.000726	3.93	0.0330
	41	2.10	0	2.65	0.125	0.00195	0.00517	406.0	0.0341	0.000176	0	0	0
	42	3.36	5.49	2.70	0.125	0.00195	0.00526	639.0	0.0536	0.000282	0.00155	0.0289	0.000243
	43	0.30	43.00	3.10	0.125	0.00195	0.00604	49.7	0.00417	0.0000252	0.00108	0.260	0.00218
	44	0.18	71.90	3.50	0.125	0.00195	0.00682	26.4	0.00222	0.0000152	0.00109	0.490	0.00412
	45	0.06	95.00	3.90	0.125	0.00195	0.00761	7.88	0.000662	0.00000504	0.000479	0.723	0.00607
	51	2.80	0	2.65	0.0625	0.000244	0.000647	4,330.0	0.3633	0.000235	0	0	0
	52	3.22	5.49	2.70	0.0625	0.000244	0.000658	4,890.0	0.4105	0.000270	0.00148	0.00361	0.0000303
	53	0.42	43.00	3.10	0.0625	0.000244	0.000756	556.0	0.0467	0.0000353	0.00152	0.0325	0.000273
	54	0.28	71.90	3.50	0.0625	0.000244	0.000854	328.0	0.0275	0.0000235	0.00169	0.0614	0.000515
	55	0.14	95.00	3.90	0.0625	0.000244	0.000952	147.1	0.01235	0.0000118	0.00112	0.0904	0.000760
	56	0.14	100.0	4.00	0.0625	0.000244	0.000976	143.4	0.01203	0.0000117	0.00117	0.0976	0.000819
	Σ	100.00						11,914.4	0.99929	0.008394	0.04166		
Solution: $n\sigma^2 = 1{,}342.9 - (-0.9) = 1{,}343.8$; but from Eq. 4, letting $P = 0.99$ and $x = 0.2$, $\sigma = 0.078$; therefore $n = 1{,}344/0.00608 = 221{,}100$; wgt. of sample = $1{,}852 \times 0.0189 = 35$ lb.													
3	11	8.9	0	2.65	1	1.00	2.65	3.36	0.0906	0.24	0	0	0
	12	91.1	5.49	2.70	1	1.00	2.70	33.74	0.9095	2.45	13.46	14.83	39.9
	Σ	100.0						37.10	1.0001	2.69	13.46		
Solution: $n\sigma^2 = 2.004 - (-0.398) = 2.402$; but from Eq. 4, letting $P = 0.99$ and $x = 0.2$, $\sigma = 0.078$; hence $n = 2.4/0.00608 = 395$; wgt. of sample = $1{,}064.3 = 20.1$ lb.													
4	11	27.3	0	2.65	1	1.00	2.65	10.31	0.278	0.737	0	0	0
	12	70.0	5.49	2.70	1	1.00	2.70	25.94	0.699	1.886	10.35	14.83	39.98
	13	2.7	43.0	3.10	1	1.00	3.10	0.871	0.0235	0.0728	3.13	133.30	359.20
	Σ	100.0						37.121	1.0005	2.6958	13.48		
Solution: $n\sigma^2 = 48.92 - (-3.04) = 51.96$; but from Eq. 4, letting $P = 0.99$ and $x = 0.2$, $\sigma = 0.078$; hence $n = 51.96/0.00608 = 8{,}550$; wgt. of sample = $23{,}048 \times 0.0189 = 436$ lb.													
5	11	95	0	2.65	1	1	2.65	35.85	0.9655	2.558	0	0	0
	12	5	100	4.00	1	1	4.00	1.25	0.0337	0.135	13.5	400	1,077.2
	Σ							37.10	0.9992	2.693	13.5		
Solution: $n\sigma^2 = 648.8 + 45.2 = 694$; but from Eq. 4, letting $P = 0.99$ and $x = 0.2$, $\sigma = 0.078$; hence $n = 694/0.00608 = 114{,}100$; wgt. of sample = $307{,}288 \times 0.0189 = 5{,}810$ lb.													

	11	4.45	0	2.65	1	1.00	2.65	1.68	0.0101	0.0268	0	0	0
	12	45.55	5.49	2.70	1	1.00	2.70	16.87	0.1013	0.2735	1.50	14.82	8.892
6	21	4.45	0	2.65	0.5	0.125	0.331	13.44	0.0806	0.0267	0	0	0
	22	45.55	5.49	2.70	0.5	0.125	0.338	134.70	0.8080	0.2730	1.50	1.86	1.116
	Σ	100.00						166.69	1.0000	0.6000	3.00		

Solution: $n\sigma^2 = 5.89 + 0.20 = 6.09$; but from Eq. 4, letting $P = 0.99$ and $x = 0.2, \sigma = 0.078$; hence $n = 6.09/0.00608 = 1{,}000$; wgt. of sample $= 599 \times 0.0189 = 11.3$ lb.

	11	4.45	0	2.65	1	1	2.65	1.68	0.0000221	0.0000586	0	0	0
	12	45.55	5.49	2.70	1	1	2.70	16.87	0.000222	0.0005995	0.00329	14.83	0.0195
7	21	4.45	0	2.65	0.0625	0.000244	0.000647	6,875	0.0904	0.0000585	0	0	0
	22	45.55	5.49	2.70	0.0625	0.000244	0.000658	69,200	0.9095	0.0005990	0.00329	0.00361	0.00000475
	Σ	100.00						76,093.55	1.0001	0.0013156	0.00658		

Solution: $n\sigma^2 = 2{,}462.5 + 0.2 = 2{,}462.7$; but from Eq. 4, letting $P = 0.99$ and $x = 0.2, \sigma = 0.078$; hence $n = 2{,}462.7/0.00608 = 405{,}400$; wgt. of sample $= 532.6 \times 0.0189 = 10.1$ lb.

			PbS										
	11	25	0	2.65	1	1	2.65	9.43	0.2815	0.746	0	0	0
	12	55	17.8	3.0	1	1	3.0	18.33	0.5470	1.641	29.22	53.4	159.5
8	13	20	23.7	3.5	1	1	3.5	5.72	0.1708	0.598	14.16	82.9	247.3
	Σ	100						33.48	0.9993	2.985	43.38		

Solution: $n\sigma^2 = 47.52 + 17.75 = 65.27$; but from Eq. 4, letting $P = 0.99$ and $x = 0.2, \sigma = 0.078$; therefore $n = 65.27/0.00608 = 10{,}730$; wgt. $= 10{,}730 \times 2.985 \times 0.0189 = 605.5$ lb.

			ZnS										
	11	25	0	2.65	1	1	2.65	9.43	0.2815	0.746	0	0	0
	12	55	0.416	3.0	1	1	3.0	18.33	0.547	1.641	0.682	1.248	3.727
9	13	20	26.3	3.5	1	1	3.5	5.72	0.1708	0.598	15.730	92.000	274.5
	Σ	100						33.48	0.9993	2.985	16.412		

Solution: $n\sigma^2 = 86.27 + 24.33 = 110.60$; but from Eq. 4, letting $P = 0.99$ and $x = 0.2, \sigma = 0.078$; therefore $n = 110.6/0.00608 = 18{,}200$; wgt. $= 18{,}200 \times 2.985 \times 0.0189 = 1{,}027$ lb.

	11	1	0	2.65	0.04	0.000064	0.0001695	5,900	0.000014	2.37×10^{-9}	0	0	0
	21	2	0	2.65	0.028	0.000022	0.0000583	34,300	0.0000808	4.71×10^{-9}	0	0	0
	31	7	0	2.65	0.02	0.000008	0.0000212	330,000	0.000784	1.66×10^{-8}	0	0	0
	41	31	0	2.65	0.014	0.00000274	0.00000726	4,270,000	0.0101	7.33×10^{-8}	0	0	0
	51	37	0	2.65	0.01	0.000001	0.00000265	13,960,000	0.0332	8.80×10^{-8}	0	0	0
	52	0.01815	100	19.3	0.01	0.000001	0.0000193	941	0.00000223	4.31×10^{-11}	4.31×10^{-9}	1.93×10^{-5}	4.59×10^{-12}
10	61	20	0	2.65	0.007	0.000000343	0.000000909	22,000,000	0.0522	4.74×10^{-8}	0	0	0
	62	0.00478	100	19.3	0.007	0.000000343	0.00000662	722	0.00000171	1.13×10^{-11}	1.13×10^{-9}	6.62×10^{-6}	15.7×10^{-12}
	71	1	0	2.65	0.005	0.000000125	0.000000331	3,020,000	0.00717	2.37×10^{-9}	0	0	0
	72	0.001655	100	19.3	0.005	0.000000125	0.00000241	687	0.00000163	3.93×10^{-12}	3.93×10^{-10}	2.41×10^{-6}	5.72×10^{-12}
	81	1	0	2.65	0.001	0.000000001	0.0000000265	377,000,000	0.8960	2.38×10^{-9}	0	0	0
	82	0.00659	100	19.3	0.001	0.000000001	0.0000000193	342,000	0.000808	1.56×10^{-11}	1.56×10^{-9}	1.93×10^{-8}	4.58×10^{-15}
	Σ	100.03						420,960,000	1.00036237	23.72×10^{-8}	7.393×10^{-9}		

Solution: $n\sigma^2 = 0.11502 - 0.00068 = 0.11434$; but from Eq. 4, letting $P = 0.99$ and $x = 0.0003125, \sigma = 0.0001213$; therefore $n = 7{,}780{,}000$; wgt. of sample $= 7.78\times10^6 \times 23.72\times10^{-8} \times 0.0189 = 0.0349$ lb.

	11	100	0	2.65	0.01	1×10^{-6}	2.65×10^{-6}	37.7×10^{-6}	0.99996	2.65×10^{-6}	0	0	0
11	12	0.03125	100	19.3	0.01	1×10^{-6}	19.3×10^{-6}	0.00162×10^{-6}	0.000043	83.0×10^{-11}	83×10^{-9}	19.3×10^{-4}	51.15×10^{-10}
	Σ							37.70162×10^{-6}	1.000003	2.65083×10^{-6}	83×10^{-9}		

Solution: $n\sigma^2 = 22.7 - (-0.002) = 22.702$; but from Eq. 4, letting $P = 0.99$ and $x = 0.0003125, \sigma = 0.0001214$; therefore $n = 15.4\times10^8$; wgt. of sample $= 15.4\times10^8 \times 2.65\times10^{-6} \times 0.0189 = 77.2$ lb.

Table 3. Solutions to sampling problems—*Continued*

Example No.	Fractions	14 Col. 7× Σ Col. 11	15 Col. 13 − Col. 14	16 Col. 15/(Σ Col. 10)² a	17 (Col. 16)²	18 b $n\sigma_{sj}^2$	19 Col. 18× Col. 17	20 Col. 16× Col. 9	21 Σ Col. 20 − Col. 20	22 Col. 20× Col. 21	23 Number of particles. Col. 9×n	24 Col. 10×n
1	11	35.65	−35.65	−4.92	24.20	0.208	5.030	−1.450	1.453	−2.10	1,441	3,820
	12	36.45	13.50	1.864	3.48	0.2083	0.724	1.312	−1.309	−1.72	3,440	9,320
	13	53.80	1,022.2	141.0	19,900	0.00101	20.099	0.141	−0.138	−0.02	5	20
	Σ						25.853	0.003		−3.84	4,886	13,160
Solution: $n\sigma^2 = 25.85 + 3.84 = 29.69$; but from Eq. 4, letting $P = 0.99$ and $x = 0.2$, $\sigma = 0.078$; therefore $n = 29.69/0.00608 = 4,885$; wgt. of sample = 13,160 × 0.0189 = 248.8 lb.												
2	11	0.110	−0.110	−1,563.0	2,440,000	0.000485	1,184.0	−0.758	3.639	−2.76	107	284
	12	0.112	0.012	170.5	29,050	0.000923	26.7	0.158	2.723	0.43	204	551
	21	0.0125	−0.0125	−177.5	31,500	0.00227	71.5	−0.405	3.286	−1.33	504	168
	22	0.0141	0.0015	21.3	453	0.00506	2.3	0.109	2.772	0.302	1,125	380
	23	0.0161	0.1239	1,760.0	3,100,000	0.00011	341.0	0.194	2.687	0.522	24	9
	31	0.00172	−0.00172	−24.4	595	0.00796	4.7	−0.0203	2.901	−0.059	1,774	73
	32	0.00175	0.00019	2.7	7.29	0.0148	0.1	0.0407	2.840	0.116	3,332	140
	33	0.00201	0.0155	22.0	484	0.000624	0.3	0.0137	2.867	0.039	138	7
	34	0.00227	0.0307	43.6	1,900	0.000185	0.4	0.00807	2.873	0.023	41	2
	41	0.000215	−0.000215	−3.06	9.36	0.0330	0.3	−0.104	2.985	−0.311	7,540	39
	42	0.000219	0.000024	0.341	0.116	0.0507	0	0.0183	2.863	0.052	11,850	62
	43	0.000251	0.00193	27.4	750	0.00415	3.1	0.114	2.767	0.316	922	6
	44	0.000284	0.00384	54.6	2,980	0.00221	6.6	0.121	2.760	0.334	491	3
	45	0.000317	0.00575	81.7	6,670	0.000662	4.4	0.0541	2.827	0.152	146	1
	51	0.0000269	−0.0000269	−0.382	0.146	0.2313	0	−0.139	3.020	−0.420	80,350	32
	52	0.0000274	0.0000029	0.0412	0.0017	0.2417	0	0.0169	2.864	0.048	90,750	60
	53	0.0000315	0.000241	3.42	11.7	0.0445	0.5	0.16	2.721	0.436	10,320	8
	54	0.0000355	0.000479	6.80	46.2	0.0267	1.2	0.187	2.694	0.504	6,080	5
	55	0.0000397	0.000720	10.23	104.6	0.0122	1.3	0.127	2.754	0.350	2,730	2
	56	0.0000406	0.000778	11.05	122.0	0.0119	1.5	0.133	2.748	0.365	2,660	2
	Σ						1,342.9	2.8811		−0.891	221,088	1,852
Solution: $n\sigma^2 = 1,342.9 - (-0.9) = 1,343.8$; but from Eq. 4, letting $P = 0.99$ and $x = 0.2$, $\sigma = 0.078$; therefore $n = 1,344/0.00608 = 221,100$; wgt. of sample = 1,852 × 0.0189 = 35 lb.												
3	11	35.68	−35.68	−4.93	24.3	0.0824	2.002	−0.447	0.446	−0.199	35.8	94.8
	12	36.35	3.55	0.49	0.24	0.0824	0.002	0.446	−0.447	−0.199	359.2	969.5
	Σ						2.004	−0.001		−0.398	395.0	1,064.3
Solution: $n\sigma^2 = 2.004 - (-0.398) = 2.402$; but from Eq. 4, letting $P = 0.99$ and $x = 0.2$, $\sigma = 0.078$; hence $n = 2.4/0.00608 = 395$; wgt. of sample = 1,064.3 = 20.1 lb.												
4	11	35.7	−35.7	−4.92	24.2	0.201	4.87	−1.366	1.372	−1.875	2,376	6,295
	12	36.4	3.58	0.493	0.243	0.210	0.05	0.345	−0.339	−0.117	5,975	16,130
	13	41.8	317.4	43.7	1,910.0	0.023	44.00	1.027	−1.021	−1.050	201	623
	Σ						48.92	0.006		−3.042	8,552	23,048
Solution: $n\sigma^2 = 48.92 - (-3.04) = 51.96$; but from Eq. 4, letting $P = 0.99$ and $x = 0.2$, $\sigma = 0.078$; hence $n = 51.96/0.00608 = 8,550$; wgt. of sample = 23,048 × 0.0189 = 436 lb.												
5	11	35.75	−35.75	−4.93	24.3	0.03253	0.792	−4.76	4.75	−22.6	110,100	291,900
	12	54.00	1,023.2	141.1	19,900	0.03253	648.0	4.75	−4.76	−22.6	3,847	15,388
	Σ						648 8	−0.01		−45.2	113,947	307,288
Solution: $n\sigma^2 = 648.8 + 45.2 = 694$; but from Eq. 4, letting $P = 0.99$ and $x = 0.2$, $\sigma = 0.078$; hence $n = 694/0.00608 = 114,100$; wgt. of sample = 307,288 × 0.0189 = 5,810 lb.												

6	11	7.95	−7.95	−22.09	488	0.0100	4.88	−0.221	0.227	−0.051	10	26.5
	12	8.1	0.792	2.206	4.86	0.0911	0.44	0.221	−0.215	−0.048	101	272.7
	21	0.993	−0.993	− 2.76	7.61	0.0733	0.56	−0.223	0.229	−0.051	81	26.8
	22	1.014	0.102	0.283	0.08	0.1520	0.01	0.229	−0.223	−0.051	808	273.1
	Σ						5.89	0.006		−0.201	1,000	599.1
Solution: $n\sigma^2 = 5.89 + 0.20 = 6.09$; but from Eq. 4, letting $P = 0.99$ and $x = 0.2$, $\sigma = 0.078$; hence $n = 6.09/0.00608 = 1{,}000$; wgt. of sample $= 599 \times 0.0189 = 11.3$ lb.												
7	11	0.01745	−0.01745	−10,070	101,300,000	0.0000221	2,238.0	−0.223	0.221	−0.049	9	23.82
	12	0.01776	0.00174	1,004	1,008,000	0.000222	224.0	0.223	−0.225	−0.050	90	242.8
	21	0.00000426	−0.00000426	2.46	6.05	0.0822	0.497	−0.222	0.220	−0.049	36,630	23.69
	22	0.00000433	0.00000042	0.242	0.0586	0.0822	0.00482	0.220	−0.222	−0.049	368,700	242.3
	Σ						2,462.5	−0.002		−0.197	405,429	532.61
Solution: $n\sigma^2 = 2{,}462.5 + 0.2 = 2{,}462.7$; but from Eq. 4, letting $P = 0.99$ and $x = 0.2$, $\sigma = 0.078$; hence $n = 2{,}462.7/0.00608 = 405{,}400$; wgt. of sample $= 532.6 \times 0.0189 = 10.1$ lb.												
8	11	115	−115	−12.26	150.3	0.202	30.37	−3.45	3.45	−11.8		
	12	130.2	29.3	3.125	9.76	0.248	2.42	1.71	−1.71	−2.92		
	13	151.8	95.5	10.18	103.7	0.142	14.73	1.74	−1.74	−3.03		
	Σ						47.52			−17.75		
Solution: $n\sigma^2 = 47.52 + 17.75 = 65.27$; but from Eq. 4, letting $P = 0.99$ and $x = 0.2$, $\sigma = 0.078$; therefore $n = 65.27/0.00608 = 10{,}730$; wgt. $= 10{,}730 \times 2.985 \times_b 0.0189 = 605.5$ lb.												
9	11	43.5	−43.5	−4.64	21.5	0.202	4.34	−1.305	1.305	−1.7		
	12	49.2	−45.5	−4.85	23.5	0.248	5.83	−2.65	2.65	−7.03		
	13	57.4	217.1	23.15	536	0.142	76.10	3.95	−3.95	−15.6		
	Σ						86.27			−24.33		
Solution: $n\sigma^2 = 86.27 + 24.33 = 110.60$; but from Eq. 4, letting $P = 0.99$ and $x = 0.2$, $\sigma = 0.078$; therefore $n = 110.6/0.00608 = 18{,}200$; wgt. $= 18{,}200 \times 2.985 \times 0.0189 = 1{,}027$ lb.												
10	11	12.5×10^{-13}	-12.5×10^{-13}	−22.2	493	1.4×10^{-5}	0.00691	-3.11×10^{-4}	-3.02×10^{-2}	9.39×10^{-6}		
	21	16.3×10^{-14}	-16.3×10^{-14}	−2.9	8.4	8.08×10^{-6}	0.000679	-2.34×10^{-4}	-3.03×10^{-2}	7.09×10^{-6}		
	31	59.2×10^{-14}	-59.2×10^{-14}	−10.5	110	7.84×10^{-4}	0.0862	-8.23×10^{-3}	-2.23×10^{-2}	18.4×10^{-5}		
	41	20.3×10^{-15}	-20.3×10^{-15}	−0.361	0.130	0.0100	0.0013	-3.65×10^{-3}	-2.69×10^{-2}	9.82×10^{-5}		
	51	19.6×10^{-15}	-19.6×10^{-15}	−0.348	0.121	0.0321	0.00388	-1.16×10^{-2}	-1.9×10^{-2}	2.2×10^{-4}		
	52	14.3×10^{-14}	44.4×10^{-13}	78.9	6,230	2.23×10^{-6}	0.0139	1.76×10^{-4}	-3.07×10^{-2}	-5.41×10^{-6}		
	61	67.2×10^{-16}	-67.2×10^{-16}	−0.119	0.0142	0.0495	0.000703	-6.21×10^{-3}	-2.44×10^{-2}	15.2×10^{-5}		
	62	48.9×10^{-15}	15.2×10^{-13}	27	729	1.71×10^{-6}	0.00125	4.62×10^{-5}	-3.06×10^{-2}	-14.1×10^{-7}		
	71	24.5×10^{-16}	-24.5×10^{-16}	−0.0435	0.00189	0.00712	0.0000135	-3.12×10^{-4}	-3.02×10^{-2}	9.39×10^{-6}		
	72	17.8×10^{-15}	55.4×10^{-14}	9.84	96.8	1.63×10^{-6}	0.000158	1.6×10^{-5}	-3.06×10^{-2}	-4.9×10^{-7}		
	81	19.6×10^{-18}	-19.6×10^{-18}	−0.000348	0.000000121	0.0932	0.000000011	-3.12×10^{-4}	-3.03×10^{-2}	9.39×10^{-6}		
	82	14.3×10^{-17}	44.3×10^{-16}	0.0789	0.00623	8.06×10^{-4}	0.00000502	6.38×10^{-5}	-3.06×10^{-2}	-19.5×10^{-7}		
	Σ						0.11502	−0.030557		6.8×10^{-4}		
Solution: $n\sigma^2 = 0.11502 - 0.00068 = 0.11434$; but from Eq. 4, letting $P = 0.99$ and $x = 0.0003125$; $\sigma = 0.0001213$; therefore $n = 7{,}780{,}000$; wgt. of sample $= 7.78\times10^6 \times 23.72\times10^{-6} \times 0.0189 = 0.0349$ lb.												
11	11	2.2×10^{-13}	-2.2×10^{-13}	−0.0313	0.00098	0.000042	4.22×10^{-8}	−0.0313	0.0313	−0.00098		
	12	1.6×10^{-12}	5.11×10^{-9}	727.0	528,000	0.000043	2.27×10^{1}	0.0313	−0.0313	−0.00098		
	Σ						22.7	0.000		−0.00196		
Solution: $n\sigma^2 = 22.7 - (-0.002) = 22.702$; but from Eq. 4, letting $P = 0.99$ and $x = 0.0003125$; $\sigma = 0.0001214$; therefore $n = 15.4\times10^8$; wgt. of sample $= 15.4\times10^8 \times 2.65\times10^{-6} \times 0.0189 = 77.2$ lb.												

a See Eq. 18, p. 06. *b* From Eq. 15, p. 05.

Deviation from the most probable assay $\bar{a}$, is measured by x; hence if z denotes $\frac{x}{\bar{a}}$, Eq. 21 may be written as

$$P = \sqrt{\frac{2}{\pi}} \int_0^{z_1\bar{a}/\sigma} e^{-\left(\frac{z\bar{a}}{\sigma}\right)^2/2} d\left(\frac{z\bar{a}}{\sigma}\right) \qquad (22)$$

If n increments assaying $a_1, a_2, \cdots a_n$ are taken from the parent lot then $\bar{a} = (a_1 + a_2 + \cdots + a_n)/n$ and $\sigma_s = \sqrt{\sum_n (a_i - a)^2/n}$, where σ_s = standard deviation of the increments. This deviation is related to the standard deviation $\sigma_{\bar{a}}$ of the mean $\bar{a}$ by $\sigma_{\bar{a}} = \sigma_s/\sqrt{n}$ (Atkin and Colton, *Statistical Methods*, Barnes & Noble, N. Y. (1938), p. 120). Substituting in Eq. 22

$$P = \sqrt{\frac{2}{\pi}} \int_0^{h1} e^{-h^2/2} dh \qquad (23)$$

where $h = \frac{z\bar{a}\sqrt{n}}{\sigma_s}$. To illustrate use of this equation consider the following:

Example. Ten 5-lb. increments taken from a lot of ore assay 5.0, 4.3, 6.0, 4.7, 5.0, 5.5, 4.0, 5.3, 4.5, and 5.7% zinc. How many increments must be composited in order that the sample shall assay within 4% of the true assay with an assurance of 99%?

The average assay = 5.0%, the standard deviation $\sigma_s = \sqrt{\frac{3.66}{10}} = 0.605$ and, from Eq. 6 or Eq. 23, letting $P = 0.99$, $h = 2.576$. Since $z = 0.04$ and $n = \left(\frac{h\sigma_s}{z\bar{a}}\right)^2$, the number of increments required is calculated as 60.6 or 61 × 5 = 305 lb. sample.

Increment size is determined by the variability and size of the ore. Generally, uniform ores permit use of small increments, whereas spotty ores require larger increments. It can be shown that a sample composited of a large number of small increments is more representative than an equal-weight sample composited of a small number of large increments. There is, however, a minimum weight of increment for each size such that samples composited of smaller increments are less representative. The minimum increment weight is best determined by experiment, although it may be estimated by calculation if the variability and segregation of the ore are known.

Bushell (*37 JCM 361*), Morrow and Proctor (*119 A 227*), Grumell and Dunningham (*15 Fuel in Science and Practice 55*) and others have determined experimentally minimum increment weights for coals of American, English, and South African origin. Fig. 3, plotted from Bushell's data (*loc. cit.*),

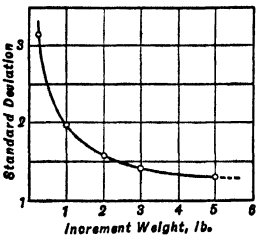

FIG. 3. Standard deviation *vs.* increment weight (*after Bushell*).

Table 4. Recommended weights of coal samples (*After Grumell*)

British Coal						
Size, in.	1/2	1	1 1/2	2	2 1/2	Large
Wgt., lb. *a*	1	2	3	4	...	10
Wgt., lb. *b*	2	2	3	4	6	10
American Coal						
Size, in.	5/8	1 1/4	2	2 to 6		
Wgt., lb. *c*	2	4	6	10		

a British Standard Institute Specification No. 735.
b B.S.I. tentative specification for size analysis.
c ASTM tentative standard.

shows the variation of σ with increment weight; any increment weight corresponding to a point on the flat part of the curve may be used in increment sampling. Table 4 (*A TP 1044*) gives recommended increment weights to be used in sampling British and American coals; the latter, being less homogeneous, require somewhat higher increment weights.

Disposition and shape of increments depend primarily upon the segregation of values and secondarily upon the applicability of various sampling methods. Lots possessed of unidirectional segregation are best sampled by taking increments in the direction of segregation. For example, if ore in a car were vertically segregated with assay ranging from 5% at the top to 25% at the bottom, a cylinder sample cut through the ore from top to bottom would be completely representative since the sample would contain correctly apportioned material from every part of the assay range. Any increment shape generated by vertical lines and cutting through the material would give representative

samples. It is also possible to take increments in a direction perpendicular to the direction of segregation providing the increments are properly spaced and located (see p. 37). With close spacing and proper location, samples composited of increments thus taken will approximate the true value of the quality under test very closely but will never completely represent it. Moreover, since spacing and location of increments require more exact knowledge of the rate of change of value with position than for a sample cut in the direction of segregation, this method of taking increments should be used only when the latter is inapplicable.

For bidirectionally segregated materials, the increments should be parallelopipeds whose principal parallel planes are determined by the two directions of segregation. Increments may also be taken in a direction perpendicular to the plane determined by the directions of segregation, but as before, proper spacing and location are predicated upon detailed knowledge of the segregation. The state of segregation existing in a lot to be sampled is rarely known; most available information is of the nature of a guess based on knowledge of the previous history of the material. Hence, increment sampling which does not completely cover the lot involves the risk that some high- or low-value region will be missed and consequently that the determined magnitude of the quality will be too low or too high. For this reason, most operators prefer to sample materials in motion, when frequent cuts of all of the stream taken part of the time reduces the danger of a biased sample (see p. 38).

Buyer's problem. The sampling problems previously considered are of the type where the assay or the proportion of mineral particles in the parent lot is known and it is required to calculate the number of particles or weight of sample that must be taken in order that the sample assay shall lie within the range delimited by the tolerance limits with some desired degree of assurance. Problems involving calculation of assurance, given sample weight and tolerance limits, or problems requiring calculation of tolerance limits, given assurance and sample weight, are only minor variations thereof. However, the converse problem, hereinafter referred to as the BUYER'S PROBLEM, where the sample assay and sometimes the weight are given, it being required to calculate the degree of assurance that the assay of the parent lot lies within prescribed limits, is entirely different.

Example 1. Seventeen identical containers are each filled with 16 particles of chert and/or sphalerite as follows: container 0 with 16 chert, container one with 1 sphalerite and 15 chert particles, container 2 with 2 sphalerite and 14 chert, $\cdots$, container 15 with 15 sphalerite and 1 chert, and container 16 with 16 sphalerite particles. One of these containers is chosen at random and from it a 4-particle sample, assaying 1 sphalerite and 3 chert particles, is withdrawn. What is the probability that the container held 4 sphalerite and 12 chert particles, *i.e.*, that container 4 was sampled?

Bayes' theorem may be applied to this problem (Uspensky, *loc. cit., p. 61*) expressed in the form

$$P_k = \frac{A_k C(m, n, k)}{\sum_k A_k C(m, n, k)} \tag{24}$$

where A_k is the presampling probability that the kth container was sampled (presampling probability of kth hypothesis). $C(m, n, k)$ is the probability that an n-particle sample taken from the kth container will assay m-particles of sphalerite (conditional probability), and P_k is the postsampling probability that the kth container was sampled (postsampling probability of kth hypothesis).

Since the containers are indistinguishable from one another and no known bias exists in favor of one or more containers, the presampling probability of choosing a particular container is $1/17 = 0.0588$. Assuming that container 2 was the container actually chosen, the probability that a 4-particle sample taken from it would assay 1 sphalerite particle is given by Eq. 1, *i.e.*, $P(1, 3,) = C(1, 3, 2,) = \frac{2!}{1!1!} \times \frac{14!}{3!11!} / \frac{16!}{4!12!} = 0.400$. Table 5 gives the details of the complete solution.

It should be noted that the postsampling probability of containers 0, 14, 15, and 16 being sampled is zero, for containers so constituted could not possibly have yielded the sample; this change in probability stems from the knowledge gained through sampling. It should also be remarked that whereas container 4 could have yielded the sampling results 48 times out of a hundred, that container would have been sampled only 14 times out of a hundred.

The compositions of the various containers represent the various hypotheses that could be made as to the composition of an unknown lot of material that was sampled. The postsampling probability of the kth container is the degree of assurance with which it may be said, after the sampling results are known, that the material sampled was composed according to the kth hypothesis.

Effect of sample size from a finite parent lot upon the postsampling probability of the kth hypothesis stems from the effect of sample size upon the conditional probabilities.

Table 5. Solution of Example 1, p. 13

Container No.	0	1	2	3	4	5	6	7	8	9	10	11	12	13	14	15	16
No. of particles:																	
Sphalerite	0	1	2	3	4	5	6	7	8	9	10	11	12	13	14	15	16
Chert	16	15	14	13	12	11	10	9	8	7	6	5	4	3	2	1	0
A_k	0.0588	0.0588	0.0588	0.0588	0.0588	0.0588	0.0588	0.0588	0.0588	0.0588	0.0588	0.0588	0.0588	0.0588	0.0588	0.0588	0.0588
$C(m, n, k)$	0.000	0.250	0.400	0.472	0.484	0.453	0.396	0.323	0.246	0.173	0.110	0.060	0.026	0.007	0.000	0.000	0.000
$A_kC(m, n, k) \times 10^4$	0	147	236	277	284	266	233	190	145	102	64.6	35.5	15.5	4.2	0	0	0
P_k	0	0.074	0.118	0.139	0.142	0.133	0.117	0.095	0.073	0.051	0.033	0.018	0.008	0.002	0	0	0

Table 6. Calculations for Example 2, p. 15

No. of particles:																	
Sphalerite	0	1	2	3	4	5	6	7	8	9	10	11	12	13	14	15	16
Chert	16	15	14	13	12	11	10	9	8	7	6	5	4	3	2	1	0
A_k	0.0588	0.0588	0.0588	0.0588	0.0588	0.0588	0.0588	0.0588	0.0588	0.0588	0.0588	0.0588	0.0588	0.0588	0.0588	0.0588	0.0588
$C(m, n, k)$	0	0	0	0.393	0.484	0.302	0.110	0.019	0	0	0	0	0	0	0	0	0
$A_kC(m, n, k) \times 10^4$	0	0	0	231	285	178	65	11	0	0	0	0	0	0	0	0	0
P_k	0	0	0	0.300	0.370	0.231	0.084	0.014	0	0	0	0	0	0	0	0	0

Table 7. Solution to Example 3, p. 15

No. of particles		$A_k(1)$	Sample 1			Sample 2		Sample 3		Sample 4		Sample 6		Sample 12	
Chert	Sphalerite		C	A_kC	$P_k(1)$	C^2	$P_k(2)$	C^3	$P_k(3)$	C^4	$P_k(4)$	$C^6 \times 10^5$	$P_k(6)$	$C^{12} \times 10^7$	$P_k(12)$
13	3	0.0588	0.393	0.0231	0.300	0.154	0.317	0.0607	0.300	0.0237	0.274	368	0.213	135	0.075
12	4	0.0588	0.484	0.0285	0.370	0.234	0.482	0.1134	0.562	0.0547	0.631	1,285	0.743	1,650	0.916
11	5	0.0588	0.302	0.0178	0.231	0.091	0.187	0.0275	0.136	0.0083	0.096	76	0.056	6	0.003
10	6	0.0588	0.110	0.0065	0.084	0.007	0.014	0.0006	0.003	0.000	0.000	0	0	0	0
9	7	0.0588	0.019	0.0011	0.014	0.000	0.000	0.000	0.000	0.000	0.000	0	0	0	0
Sum				0.0770	0.999	0.486	1.000	0.2022	1.001	0.0867	1.001	1,729	1.012	1,791	0.994

Example. 2. Instead of the 4-particle sample taken in the previous example, assume a 12-particle sample giving the same assay, *i.e.*, 3 sphalerite and 9 chert particles. Table 6 shows details of calculation.

The postsampling probability that the fourth container was sampled has increased from 0.143 to 0.370. Similar increases are observed in the postsampling probabilities of the 3rd and 5th containers, all others show a decrease, while the probabilities that containers 1, 2, 8, 9, 10, 11, 12, and 13 were sampled vanish. In other words, an increase in sample size increases the postsampling probabilities of some hypotheses while decreasing those of other hypotheses and thus narrows the range of the more probable hypotheses.

Repeated sampling of a finite parent lot has the effect of narrowing the range of the more probable hypotheses. This effect is not achieved by rendering some hypotheses impossible, but by decreasing the postsampling probability of some hypotheses until they are negligible.

Example 3. If in the preceding example, the sample was returned to the container (after observation) and a second 12-particle sample taken, this in turn being returned to the container and a third sample taken, etc., to determine the postsampling probabilities of the various hypotheses after 2, 3, $\cdots$ s samples have been taken, it is necessary to take into account all the information gained from previous samples. Before the second sample is taken, the presampling probabilities of the various hypotheses are not the same as the presampling probabilities before the results of the first sampling operation are known; in fact they are the postsampling probabilities after the first sample is assayed, *i.e.*, $A_k(2) = P_k(1)$ where $P_k(1)$ = postsampling probability of kth hypothesis after first sample, and $A_k(2)$ = presampling probability of kth hypothesis before second sample. Similarly

$$A_k(3) = P_k(2); \quad A_k(4) = P_k(3), \cdots; \quad A_k(s) = P_k(s-1)$$

Hence by repeated substitutions in Eq. 24

$$P_k(s) = \frac{A_k(1)C(m, n, k)^s}{\sum_k A_k(1)C(m, n, k)^s} \tag{25}$$

The details of the calculation are shown in Table 7, which calculates the postsampling probabilities after 1, 2, 3, 4, 6, and 12 sampling operations.

Effect of previous knowledge as to composition is reflected in the postsampling probabilities through its effect upon the presampling probabilities. Such knowledge may derive from visual examination of the parent lot by a competent observer, from results of other tests, from previous experience with similar materials, etc. In general, the effect of such knowledge is to narrow the range and increase the postsampling probabilities of the more probable hypotheses.

Example 4. If in Ex. 3 a competent observer glimpsed the contents of the container that was taken at random and reported seeing at least four sphalerite particles, then the presampling probabilities of the various hypotheses must be changed, since all hypotheses that the containers hold less than four sphalerite particles are impossible. This eliminates the first 4 hypotheses and since the remaining 13 are equally probable the presampling probabilities thereof are $1/13 = 0.0769$. Table 8 gives the calculated postsampling probabilities after 1, 2, and 3 sampling operations.

Table 8. Solution of Example 4

No. of particles		$A_k(1)$	Sample 1		Sample 2		Sample 3	
Sphalerite	Chert		$C(m,n,k)$	$P_k(1)$	$C^2(m,n,k)$	$P_k(2)$	$C^3(m,n,k)$	$P_k(3)$
4	12	0.0769	0.484	0.529	0.234	0.705	0.113	0.795
5	11	0.0769	0.302	0.330	0.091	0.274	0.028	0.197
6	10	0.0769	0.110	0.120	0.007	0.021	0.001	0.010
7	9	0.0769	0.019	0.021	0	0	0	0
Sum			0.915	1.000	0.332	1.000	0.142	1.002

An infinite parent lot will, in general, permit of an infinite number of presampling hypotheses as to composition, hence the presampling and postsampling probability of a particular hypothesis is vanishingly small; however the presampling and postsampling probability of the hypothesis that the assay value lies within some interval of the composition range will, in general, be finite. The probability that a sample of n particles will contain m mineral particles when drawn from a lot wherein the proportion of mineral particles is p is the conditional probability $C(m, n, p)$ and may be calculated from Eq. 3, *i.e.*,

$$C(m, n, p) = C_n^m p^m q^{n-m}$$

where $q = 1 - p$ = proportion of gangue particles. The presampling and postsampling probabilities that the parent lot contains mineral particles in proportion p are respectively

A_p and P_p. Substitution of Eq. 3 in Eq. 24 gives

$$P_p = \frac{A_p C_n^m p^m q^{n-m}}{\sum_p A_p C_n^m p^m q^{n-m}} = \frac{A_p p^m q^{n-m}}{\sum_p A_p p^m q^{n-m}}$$

The postsampling probability $P(0 \leq p \leq p_1)$ that the parent lot contains a proportion of mineral particles greater than 0 and less than p_1 is given by (Uspensky, *loc. cit., pp. 67–68*)

$$P(0 \leq p \leq p_1) = \frac{\sum_0^{p_1} A_p p^m q^{n-m}}{\sum_0^1 A_p p^m q^{n-m}} = \frac{\int_0^{p_1} A_p p^m (1-p)^{n-m}\, dp}{\int_0^1 A_p p^m (1-p)^{n-m}\, dp} \tag{26}$$

Successful application of this equation to problems is dependent upon knowledge of an expression relating A_p to p. In many problems of interest, what is known about A_p is that all assays are equally probable, hence A_p is a constant independent of p, and Eq. 26 becomes

$$P(0 \leq p \leq p_1) = \frac{\int_0^{p_1} p^m (1-p)^{n-m}\, dp}{\int_0^1 p^m (1-p)^{n-m}\, dp} \tag{27}$$

Approximation of postsampling probabilities. The results of the indicated integration may be approximated (*after 8 Bell System Tech. J. 99*) by

$$P(0 \leq p \leq p_1) = \frac{1}{2} + \frac{1}{\sqrt{2\pi}} \int_0^{x\sqrt{2}} e^{-x^2/2}\, dx - \frac{S_i e^{-x^2}}{2\sqrt{\pi}} \tag{28}$$

where $x^2 = n \ln [(n+1)/n] + m \ln [m/(n+1)p] + (n-m) \ln [(n-m)/(n+1)(1-p)]$ (29)

and x is to be taken negative when $p < m/n$. S_i is the ith approximation to an infinite series, the first three approximations being

$$S_1 = R_1; \quad S_2 = \frac{R_1 + R_2 x}{1 + R_2/2}; \quad S_3 = \frac{R_1 + R_2 x + R_3(1 + x^2)}{1 + R_2/2} \tag{30}$$

where

$$R_1 = \frac{4(n-2m)}{3\sqrt{2nm(n-m)}}; \quad R_2 = \frac{1}{6}\left(\frac{1}{n-m} + \frac{1}{m} + \frac{13}{n}\right); \quad R_3 = -\frac{4}{15} R_1 \left(R_2 + \frac{6}{n}\right) \tag{31}$$

The first approximation is usually sufficient to give results of extreme accuracy; however, when p is vanishingly small the second, third, or higher approximation terms may be required; higher approximation terms are also required when n is small. When n is very large and p very small Eqs. 29 and 31 may be written as

$$x^2 = m \ln \frac{m}{np} + np - m \tag{32}$$

and

$$R_1 = \frac{4}{3\sqrt{2m}}; \quad R_2 = \frac{1}{6m}; \quad R_3 = -\frac{4}{15} R_1 R_2 \tag{33}$$

Example 5. In Ex. 11 of Table 3 it was calculated that for the particular conditions there prevailing a sample containing 15.41×10^8 particles must be taken in order that the sample assay fall in the range $0.03125 \pm 0.0003125\%$ Au (corresponding to 10 ± 0.1 oz. Au per ton) 99 times out of 100 (assurance = 0.99). Similar calculation yields a figure of 6.27×10^8 particles in order that the sample shall assay within the same tolerance limits with an assurance of 0.90. To calculate the postsampling probability that a sample containing 6.27×10^8 particles and assaying 0.03125% Au came from a parent lot whose gold content lies in the range $0.03125 \pm 0.0003125\%$ Au proceed as follows: The tolerance limits correspond to $p_1 = 4.254 \times 10^{-5}$ and $p_2 = 4.340 \times 10^{-5}$, while the proportion (by number) p of gold particles actually found in the sample is 4.297×10^{-5} (Table 3, Ex. 11, Col. 9). Hence $m = np = 6.27 \times 10^8 \times 4.297 \times 10^{-5} = 26{,}930$. Substitution of these values in Eq. 32 gives

$$x_2^2 = 26{,}930 \ln \frac{26{,}930}{27{,}210} + 27{,}210 - 26{,}930 = 1.274$$

$$x_1^2 = 26{,}930 \ln \frac{26{,}930}{26{,}680} + 26{,}680 - 26{,}930 = 0.9876$$

Whence $x_1 = -0.994$ and $x_2 = 1.129$; x_1 is taken as negative since $p_1 < m/n$. The upper integration limits of the probability integral become: $\sqrt{2}x_1 = -1.405$ and $\sqrt{2}x_2 = 1.597$, hence

$$\int_0^{-1.405} e^{-x^2/2}\, dx = -0.4200; \quad \int_0^{1.597} e^{-x^2/2}\, dx = 0.4449$$

To calculate the first approximation term, first compute $S_1 = R_1 = 4/3\sqrt{2 \times 26{,}930} = 0.00575$; then $e^{-x_1^2} = e^{-0.9876} = 0.3723$ and $e^{-x_2^2} = e^{-1.274} = 0.2797$; hence $S_1 e^{-x_1^2}/2\sqrt{\pi} = 0.0006$ and $S_1 e^{-x_2^2}/2\sqrt{\pi} = 0.0005$. The desired postsampling probability may now be calculated, thus:

$$P(p_1 \leq p \leq p_2) = P(0 \leq p \leq p_2) - P(0 \leq p \leq p_1)$$

But

$$P(0 \leq p \leq p_2) = 0.5000 + 0.4449 - 0.0005 = 0.9444$$

and

$$P(0 \leq p \leq p_1) = 0.5000 - 0.4200 - 0.0006 = 0.0794$$

Therefore

$$P(p_1 \leq p \leq p_2) = 0{,}9444 - 0.0794 = 0.8650$$

Tools of calculation. A similar calculation gives a postsampling probability of 0.9913 that the parent lot assay within $0.03125 \pm 0.0003125\%$ when the sample contains 15.41×10^8 particles and assays 0.03125% Au. This should not be interpreted to mean that the postsampling probability equals the sample probability, but rather that calculational refinements must be employed to pick up differences of one part in a thousand. At least 4-place probability tables must be used for 0.99 assurance; for higher assurances, more significant figures must be carried. Values of the probability integral may be found in Czuber's *Wahrscheinlichkeitsrechnung* (J. Springer) or may be calculated from the series (*8 Bell System Tech. J. 102*)

$$\frac{1}{2} + \int_0^{x\sqrt{2}} e^{-x^2/2}\,dx = \frac{e^{-x^2}}{2x\sqrt{\pi}}\left(1 - x_1^{-2} + 1 \cdot 3x_1^{-4} - 1 \cdot 3 \cdot 5x_1^{-6} + \cdots\right) \tag{34}$$

where $x_1 = \sqrt{2}x$.

Duplicate samples of an infinite lot increase the postsampling probability of the more probable assay range. If K samples containing $n_1, n_2, \cdots, n_k$ particles are taken of some infinite parent lot and found to contain $m_1, m_2, \cdots m_k$ valuable mineral particles, then the postsampling probability that the parent lot contains a proportion p of mineral particles such that $p_1 \leq p \leq p_2$ is given by

$$P(p_1 \leq p \leq p_2) = \frac{\int_{p_1}^{p_2} p^{m_1+m_2+\cdots+m_k}(1-p)^{n_1+n_2+\cdots+n_k-(m_1+m_2+\cdots+m_k)}\,dp}{\int_0^1 p^{m_1+m_2+\cdots+m_k}(1-p)^{n_1+n_2+\cdots+n_k-(m_1+m_2+\cdots+m_k)}\,dp} \tag{35}$$

The effect, therefore, of duplicate sampling is the same as that of an increase in sample size; the larger sample being a composite of the duplicate samples. This conclusion, based on sampling theory, presupposes that all other treatment accorded samples is free from error; in practice it must be modified since duplicate samples expose errors of assaying, handling, etc. Two independent duplicate samples which check within limits set by an assay method, and are each of such size as will give a sample probability of 0.9 or better, suffice to determine the most probable assay range of the parent lot with a probability of approximately 0.99, usually higher. If the samples are not independent, but have a similar history up to some particular stage, being independent thereafter, agreement thereof confirms only hypotheses relative to the composition of the stage where independency began. For example, if 10-in. material is reduced by four stages of crushing to 20-m. with sampling between stages and duplicate samples taken of the product of the last stage, agreement of the samples may be used to confirm hypotheses as to the composition of the <20-m. material only. This confirmation may be extended to the parent lot only by assuming knowledge as to the errors produced in the other three stages of sampling (p. 07). Although this fact appears to be well known, its importance, judged from practice, is not appreciated. The great importance attached to agreement or disagreement of buyer's or seller's samples with the umpire sample and with each other, when differentiation is made in the last stage, is entirely unjustified, since it is always possible to produce multiple samples of the last stage that agree within normal tolerance limits, because the cut is made at fine sizes. The truly important factor is the validity of the assumption made as to the accuracy of the previous sampling stages. The practice of withholding, until settlement, umpire samples taken at *the first* sampling stage is to be recommended; lacking this, competent judgment of sampling procedure is the only substitute.

Effect of a quality test upon the error of the final result may be calculated in terms of the standard deviation, from the following equation

$$\sigma^2 = \sigma_q^2 + \sigma_s^2 \tag{36}$$

where σ, σ_q, and σ_s are respectively the standard deviations of the final result, the quality

Table 9. Sampling results on gold ores, Taylor and Brunton Sampling Co., Cripple Creek, Colo.

Lot	Sample 1, ounces of gold per ton		Sample 2, ounces of gold per ton		Average of 4 results, ounces per ton	Deviation of average				Difference between assayers on same sample		Difference between two samples	
						Below high assay		Above low assay					
	Assayer A	Assayer B	Assayer A	Assayer B		Ounce	Per cent.	Ounce	Per cent.	Sample 1	Sample 2	Assayer A	Assayer B
1	0.53	0.55	0.55	0.56	0.5475	0.0125	2.23	0.0175	3.30	0.02	0.01	0.02	0.01
2	1.11	1.10	1.07	1.09	1.0925	0.0175	1.58	0.0225	2.10	0.01	0.02	0.04	0.01
3	1.27	1.30	1.30	1.35	1.3050	0.0450	3.33	0.0350	2.76	0.03	0.05	0.03	0.05
4	1.27	1.24	1.27	1.28	1.2650	0.0150	1.17	0.0250	2.02	0.03	0.01	0.00	0.04
5	1.36	1.35	1.29	1.30	1.3250	0.0350	2.57	0.0350	2.71	0.01	0.01	0.07	0.05
6	1.77	1.72	1.75	1.74	1.7450	0.0250	1.41	0.0250	1.45	0.05	0.01	0.02	0.02
7	2.22	2.24	2.22	2.23	2.2275	0.0125	0.56	0.0075	0.34	0.02	0.01	0.00	0.01
8	2.33	2.34	2.34	2.36	2.3425	0.0175	0.74	0.0125	0.54	0.01	0.02	0.01	0.02
9	12.62	12.58	12.69	12.68	12.6425	0.0375	0.30	0.0625	0.50	0.04	0.01	0.07	0.10
10	115.05	115.25	114.90	115.20	115.1000	0.1500	0.13	0.2000	0.17	0.20	0.30	0.15	0.05
Average of 1–8						0.0225	1.70	0.0225	1.90	0.0238	0.0175	0.0238	0.0262

Table 10. Comparison of gold assays on same samples by buyer and seller

Grade of ore, ounces per ton	Number of samples	Difference, ounce per ton				Number of cases with difference of .. oz.													Number of cases where difference is less than probable difference
		Maximum	Minimum	Average	Probable (*a*)	0.00	0.01	0.02	0.03	0.04	0.05	0 06	0.07	0.08	0 09	0.10	0 11 to 0 20	0.21 to 0.30	+0.30	
0.30 to 0.99	96	0.11	0.00	0.0212	0.0183	11	29	25	16	8	2	4	0	0	0	0	1	0	0	65
0.94 to 1.96	172	0.21	0.00	0.0492	0.0420	16	15	18	21	15	27	15	10	9	6	7	12	1	0	85
1.97 to 3.34	110	0.18	0.00	0.0578	0.0470	4	6	14	10	12	12	16	5	9	6	1	15	0	0	58
2.80 to 4.08	56	0.37	0.00	0.0964	0.0794	3	2	2	3	3	7	4	3	6	3	0	17	1	2	33
4.08 to 4.69	12	0.20	0.01	0.0867	0.0756	0	2	2	0	0	0	1	0	2	0	1	4	0	0	7
5.26 to 5.90	8	0.19	0.00	0.0850	0.0766	2	0	0	0	0	0	1	0	2	0	0	3	0	0	5
Totals	454	0.37	0.00			36	54	61	50	38	48	41	18	28	15	9	52	2	2	253

a Probable difference $= 0.6745\sqrt{\frac{\Sigma d^2}{n-1}}$.

test, and the sample. The error of the final result cannot be less than either of the individual errors, and is usually greater than either.

Minimum weight of sample for a quality test. Specifying σ and knowing the value of σ_q, and using the value of σ_s calculated from Eq. 36, the minimum weight of sample may be computed by the method of Table 3. The sole function of this calculated minimum weight is that it sets a lower limit to the sample weight that may be taken; in general, larger weights are needed for other reasons. For example, whereas a minimum sample weight of 0.25 gm. may be calculated for a Cu ore ground to <200-m., the method of assaying may require a 0.5 to 1.0 gm. sample, and if assay is to be run in triplicate, three times that amount must be taken. In general, the total weight required for assays may range from 100 gm. to 1 kg. If the quality under test is response of ore to some milling operation the weight required may range from a few pounds to many tons, depending upon the extent of the investigation.

Allowable error is determined by the purpose for which the sample is taken. The least error is allowed in taking samples for assay. Great error is allowable in the case of samples taken for preliminary treatment tests, and the like. The allowable error in sampling for assay is least when the assay is to form the basis for settlement between buyer and seller. The limit is practically fixed by the accuracy of the methods of assay used, it being, of course, unnecessary to carry refinement in sampling beyond the point reached by ordinary commercial methods of analysis. Accuracy of analytical methods on different products is presented in the following paragraphs.

Gold. Duplicate assays by the same assayer should check within 0.02 oz. on low-grade ores; the discrepancy should not exceed 0.05 oz. on 5-oz. ore, while a 0.1-oz. discrepancy is permissible on 5- to 20-oz. ore. (Lodge, R. W., *Notes on Assaying*, John Wiley & Sons, 1919; Smith, E. A., *The Sampling and Assay of the Precious Metals*, Chas. Griffin & Co., Ltd., London, 1913.) Two assayers working on the same pulp or on samples cut from a small, finely pulverized lot should check within similar limits, according to most writers. Fulton (*TP 83 USBM*) states that differences of 0.02 to 0.05 oz. are usually split on 1- to 2-oz. ores and of 0.04-oz. on ores running above 2 oz. Barbour (*92 J 314*) gives 0.05 oz. as the splitting limit and Whitaker (*105 J 538*), 0.02 oz. Seamon (*A Manual for Assayers and Chemists*, John Wiley & Sons, 1910) states that 0.01 and 0.2 oz. covers the usual splitting range, but recommends that umpiring be resorted to when the difference between buyer's and seller's assays on a 50-ton lot exceeds 0.1 oz. Table 9, arranged from Brunton (*40 A 567*), presents figures of actual mill results on a variety of ores. By comparison of the last four columns, the degree to which sampling checks assaying may be observed. Table 10 was prepared from data given by Woodbridge (*TP 86 USBM*) based on results obtained from shipments of one mine to various sampling plants. It shows the degree to which buyer and seller may be expected to check on the same samples of various grades of ore. The detail (not presented here) shows that buyer's assays are rather consistently lower than seller's, which leads to the belief

Table 11. Comparison of gold assays on original and duplicate samples

Grade of ore, ounces per ton	Number of samples	Difference, ounce per ton				Number of cases with difference of .. oz.										Number of cases where difference is less than the probable difference
		Maximum	Minimum	Average	Probable (a)	0.00	0.01	0.02	0.03	0.04	0.05	0.06	0.07	0.08	0.09	0.10	0.11 to 0.20	0.21 to 0.30	+0.30	
0.30 to 0.99	96	0.16	0.00	0.0194	0.0212	21	36	18	7	5	1	3	2	1	0	0	2	0	0	75
0.94 to 1.96	172	0.40	0.00	0.0580	0.0648	26	24	29	12	23	3	11	2	7	1	7	20	2	5	128
1.97 to 3.34	110	0.62	0.00	0.0958	0.1174	15	13	16	5	12	3	7	3	3	1	6	13	3	10	84
2.80 to 4.08	56	0.46	0.00	0.1210	0.1142	3	1	9	1	5	2	3	1	7	0	2	11	7	4	36
4.08 to 4.69	12	0.19	0.00	0.0500	0.0504	2	0	3	1	2	0	1	0	1	0	1	1	0	0	8
5.26 to 5.90	8	0.26	0.02	0.0850	0.0816	0	0	1	1	1	1	1	1	1	0	0	1	0	0	6
Totals	454	0.62	0.00	.....	.....	67	74	76	27	48	10	26	8	20	2	16	48	13	19	337

a Probable difference $= \sqrt{\frac{\Sigma d^2}{n-1}}$.

that deviations shown in this table are not due entirely to physical difficulties. Table 11, arranged from the same source as Table 10, is a comparison to indicate the degree to which duplicate samples may be expected to check. Note that, in general, greater difference exists between duplicate samples than between assays by buyer and seller.

The above figures indicate that sampling should be accurate to within at least 1% on a 5-oz. ore while an error of as much as 5% would be allowable on 0.5-oz. ore. A hard and fast rule as to allowable difference cannot be set for all cases. Many ores present physical difficulties in sampling and assaying which must be taken into account when setting a standard for accuracy. In any case, however, although individual assays may not check closely, an average of several or many assays on a sample should closely approximate the true value of the sample.

Silver. Duplicate assays by the same assayer, doing the most careful work, should check within 0.2 to 0.5 oz. for ores up to 50 oz. In ordinary work differences up to 1.0 or 2.0 oz. maximum may be expected (*Fulton, Seamon*). On high-grade ores, duplicates should check within 1% of the total silver content. Assays on duplicate samples by different assayers should check within 0.5 to 1.0 oz. for average (10- to 20-oz.) ores (*Fulton*). On high-grade ores differences of 1% are allowable. The usual splitting limit between buyer and seller is 0.5 oz.

Tin. Ordinary cyanide fire assays by the same assayer should check within 0.2% metal for low-grade ores to 0.5% for high-grade ores. (W. A. MacLeod and C. Walker, *Metallurgical Analysis and Assaying*, C. Griffin & Co., Ltd., London, 1903.)

Other metals. Table 12 presents limits for commercial work using volumetric methods. Duplicate electrolytic assays for copper should check within 0.03% metal on 20% to 60% ores and 0.02% on ores less than 20% (*MacLeod and Walker*).

Table 12. Limits of accuracy in commercial volumetric assay

Metal, etc.	Duplicates, same assayer	Same pulp, different assayers	Between buyer and seller	
			Different assayers	Ordinary splitting limits
Copper	0.05 to 0.20% *b*	0.2%	0.25 to 0.5% *b*	0.2 to 0.5% *e*
Lead	0.05 to 0.2% *b*	0.2 to 0.8% *g*	0.5 to 1.0% *b*	0.5 to 0.6% *a*
Zinc	0.05 to 0.2% *b*	0.2% *f*	1.0% *b*	0.6 to 1.0% *e*
Insoluble	0.3% *c*		1.0 to 2.0% *b*	0.5 to 1.0% *e*
Manganese	0.1% *d*			1.5% *f*
Lime	0.3% *c*		1.0% *b*	0.5–1.0–1.5% *f*
Iron	0.3% *c*		1.0 to 2.0% *b*	0.5 to 1.0% *e*
Sulphur	0.3% *c*		1.0% *c*	0.5 to 1.0% *e*

Note: Percentages are percentages of metal, not of total metal content.

a Set by committee for standardization of sampling, assays, and settlements in Missouri, Kansas, and Oklahoma districts.

b TP 83 USBM. *d MacLeod and Walker.* *f Seamon.*
c 108 J 806. *e 105 J 538.* *g 121 P 866.*

Worth of valuable mineral. The preceding text and tables show that on gold ores and concentrate the allowable error is, in general, under 0.05 oz.; on silver ores, under 0.5 oz.; on copper ores, from 1 to as high as 10 lb. per ton; and on zinc and lead, as high as 20 lb. per ton; increasing as the worth of the valuable mineral decreases.

Table of sample weights. Although a method exists, as outlined above, for computing sample weights required to give a result within specified limits of error and with a required degree of assurance, taking into account sampling and testing errors, difficulties in computation as well as inadequate dissemination of information concerning the method have militated against its general adoption. The usual way to determine the sample weight required at any size is to reckon on experience with the particular ore to be sampled or experience with ores in general. The tendency is to allow a sufficient factor of safety by taking a sample large enough to cover possible unforeseen sources of error. Variations in the weights taken in practice, on ores of same class, are not always due to disregard or misunderstanding of the principles involved, but to local conditions and the facilities available.

Brunton (*25 A 826*) presented diagrams based on mathematical calculations to determine the weight of sample at different sizes when the specific gravity of the richest mineral and the ratio of grade of the richest mineral to the average grade of the ore is known. The diagrams are based on the reasoning that the allowable error is equal to the difference between the value of the probable number of pieces of valuable mineral and the same number of pieces of average value which they would replace if in excess or deficit. Results show that if such conditions remain the same throughout all sizes the weight of sample should vary as the cubes of the diameters. Full account is also taken of the fact that larger pieces than the theoretical cube are found in the undersize of a screen, owing either to irregularity of the screen or the presence of elongated pieces. Use of these diagrams is limited to cases where conditions are known and where they remain the same throughout all sizes. This is not the case with ordinary ores.

Richards (*2 OD, Chap. 19*), reasoning from considerations of variability and noting that in several installations on a variety of different ores the weights at different sizes were taken proportional to the squares of the diameters, calculated a table for different grades of ore, using one figure from practice in each case and calculating the rest.

Cols. 1 to 6 in Table 13 were prepared from Richards' table. Col. 7 shows weights obtained by applying the rule that the sample weight should vary as the cube of the diameter. The calculation is based on the assumption that 0.1 assay ton (0.00643 lb.) is a correct sample of 100-m. material. Col. 8 gives figures presented by Philip Argall for sampling in successive cuts 200,000-lb. lots of 10- to 15-oz. gold ores from CRIPPLE CREEK. The weights in this column vary approximately as the squares of the diameters and lie somewhere between the figures in Cols. 5 and 6 from Richards. The larger figures in parentheses are recommended for an added factor of safety for certain ores. Col. 11 summarizes results obtained from examination of 55 flowsheets of sampling plants. The weights are based on 100,000-lb. lots, the figures being averages for different sizes. In averaging, some excessively high or low weights for any one size were omitted. The results lie between Cols. 3 and 4 for medium ores as given by Richards. This is as might be expected and indicates that practice generally has followed the rule that sample weights should vary as the squares of particle diameters. Cols. 9 and 10 give maximum and minimum figures from the flowsheets used in averaging; figures in parentheses are highest or lowest figures.

Cols. 12 to 15 inclusive present sampling standards suggested by Demond and Halferdahl for base and precious metals. These data were set down in an attempt to obtain logical figures based on a combination of experiment and mathematics rather than on arbitrary application of the rule of squares. Their method is based on the assumption that the sample weight w should vary as some power a of the diameter D or $w = kD^a$ where k is a constant for any given ore. One gram for base-metal ores and one assay ton for precious-metal ores, the amounts usually taken for assays, were assumed to be correct sample weights for 150-m. material. A portion of the ore at some larger size was divided into a number of equal parts and each part was crushed down and assayed. The probable error for any portion was then calculated and if larger than the allowable error the correct sample weight was calculated so as to obtain a probable error less than the allowable error in 90 to 95% of all cases. Substituting values of weights and sizes in the two instances in the formula $w = kD^a$, they solved for k and a, and then calculated the correct weights for other sizes. They demonstrated that values of a less than 1.5 should not be used, as the samples would be too small. The method is applicable to any given class of ores. With low-grade or very uniform ores a will have a low value and with high-grade or spotty ores a high value (see Table 13); for ores of intermediate grade or uniform value, a will lie between these extremes.

While the method of Demond and Halferdahl has much to commend it, it does not take into account the changes in relation between gangue and valuable mineral with change of particle size, but uses the same power of the diameter over the whole range of sizes. Cols. 17 and 18 use 1 assay ton for precious-metal ores and 1 gm. for base-metal ores as correct weights at 150-m. and take the exponent a as ranging from 3 for material between 150-m. and 65-m. to 1.5 for material between 2-in. and 4-in. This method tends to give larger samples at the smaller sizes and smaller samples in the larger sizes. If the assay charges need to be larger than 1 assay ton or 1 gm., the weight of any size may be found by multiplying the tabular figures by the number of assay tons or grams needed to give correct assays.

Col. 16 gives the minimum permissible sample weights suggested by Richards for GOLD ORES. For SILVER ORES take one-tenth of these values. Inspection of figures in this column shows that there is no constant or regularly changing ratio between weights and diameters. These sample weights are evidently based on no rule except experience and personal judgment as to what weights can be taken at various sizes.

Examination of sample-mill flowsheets indicates wide variation in sample size. The most obvious relation noticed is the taking of successive 20% cuts after each reduction in size by one-half or the use of a value for a of about 2.13.

Use of this table should be restricted to cases where the information necessary for a calculation of sample weight is not available; it should not be used as a substitute for the preliminary investigation necessary to intelligent sampling. The impossibility of giving one sample weight to cover sampling of, say, spotty ores without taking into consideration the variability of the ore at different sizes and the distribution of values among the various sizes is too apparent to require further consideration. EXS. 10 and 11, Table 3, illustrate the point. Ex. 10 gives the solution for a <14-m. gold-bearing sand with values distributed as shown; sample weight is 0.035 lb. if the sample is to assay 10 ± 0.1 oz. Au per ton with an assurance of 99%, when 58.3% of the gold is found in the 48~65-m. material. From Col. 5 of Table 13 a sample weight of 28 to 14 lb. is required based on 14-m. or a weight of 1.8 to 0.9 lb. based on 48~65-m. material. For Ex. 11, where 100% of values are found in 48~65-m. material, a sample weight of 77 lb. is required.

Weight of coal samples adopted in the standard method of sampling coal (*ASTM: D 21–40*), based on an original gross sample of 1,000 lb. is given in Table 14.

A 15-lb. sample is taken by coning and quartering the 30-lb. lot (see p. 27). This sample is crushed to pass an 8-m. screen and divided by riffling (chute widths not over 1/2-in.) to give a 1 3/4-lb. sample. Further reduction of the sample yields 200 gm. after crushing to pass 20-m. and 50 gm. after crushing to pass 60-m.

Weight of samples for screen test should be great enough to give an accurate sample at the sizes that are important. The allowable error is influenced by the care with which the screen test is made. The weights ordinarily taken for screen-test samples range from,

Table 13. Sample weights at different particle sizes (pounds)

Diameter of largest piece			Arranged from R. H. Richards						$W\alpha D^3$	Argall *a*
			1	2	3	4	5	6	7	8
Inches	Mm.	Mesh	Very low grade or very uniform ores	Low-grade or uniform ores	Medium ores		Rich or spotty ores	Very rich or exclusively spotty ores	Starting with 0.1 assay ton of <10-m. material	Colorado practice gold ores
8	.....	.....	19,200	64,000	.....	.....	.....	.....	.....	.....
6	.....	.....	10,800	36,000	80,000	.....	.....	.....	.....	.....
5	.....	.....	7,500	25,000	55,550	.....	.....	.....	.....	.....
4	.....	.....	4,800	16,000	35,556	80,000	.....	.....	.....	.....
3	.....	.....	2,700	9,000	20,000	45,000	.....	.....	900,000	.....
2.5	.....	.....	1,875	6,250	13,888	31,250	80,000	.....	521,600	.....
2	.....	.....	1,200	4,000	8,889	20,000	51,200	.....	267,264	.....
1.5	.....	.....	675	2,250	5,000	11,250	28,800	.....	112,500	.....
1.25	.....	.....	469	1,563	3,472	7,813	20,000	.....	65,200	.....
1.0	.....	.....	300	1,000	2,222	5,000	12,800	.....	33,408	40,000
0.75	.....	.....	169	563	1,250	2,813	7,200	.....	14,063	.....
0.625	.....	.....	117	391	868	1,953	5,000	.....	8,150	.....
0.500	.....	.....	75	250	556	1,250	3,200	.....	4,176	.....
0.375	.....	.....	42	141	313	704	1,800	.....	1,758	.....
0.3125	.....	.....	29	98	217	488	1,250	.....	1,019	.....
0.250	.....	.....	19	63	139	313	800	27,550	522	2,500 (4,000)
0.1875	.....	.....	10.5	35	78	176	450	15,500	220	.....
0.131	3.327	6	5.15	17.2	38.1	86	220	7,560	75	.....
0.093	2.362	8	2.6	8.65	19.2	43	111	3,810	26.32	.....
0.065	1.651	10	1.29	4.3	9.5	21.5	55	1,890	9.32	157 (250)
0.046	1.168	14	0.65	2.16	4.8	10.75	28	953	3.29	.....
0.0328	0.833	20	0.322	1.075	2.37	5.38	13.76	473	1.16	.....
0.0232	0.589	28	0.162	0.539	1.20	2.69	6.90	238	0.41	10 (15)
0.0164	0.417	35	0.081	0.269	0.59	1.345	3.44	118	0.146	.....
0.0116	0.295	48	0.041	0.135	0.30	0.673	1.73	60	0.051	.....
0.0082	0.208	65	0.020	0.067	0.15	0.336	0.86	30	0.018	.....
0.0058	0.147	100	0.010	0.034	0.075	0.168	0.43	15	0.0064	.....
0.0041	0.104	150	0.005	0.017	0.038	0.084	0.215	8	.....	.....
0.0029	0.074	200	0.0025	0.009	0.019	0.042	0.107	.....	.....	.....

a 10 IMM 234.

Table 13. Sample weights at different particle sizes (pounds)—*Continued*

Diameter of largest piece			Woodbridge *b*			Demond and Halferdahl *c* $w = kD^a$				Richards	*a* varies from 1.5 to 3.0	
			9	10	11	12	13	14	15	16	17	18
Inches	Mm.	Mesh	Maximum	Minimum	Averages from practice	Base-metal ores, $a = 1.5$	Base-metal ores, $a = 2.7$	Precious metal ores, $a = 1.5$	Precious metal ores, $a = 2.7$	Gold ores, minimum	Gold ores	Base-metal ores
8												
6												
5												
4						71	290,000	2,080	8,460,000		228,700	7,833
3			50,000	10,000	25,000	46						
2.5			20,000	20,000	20,000	35.1						
2.			25,000	4,000	16,000	25.1	43,900	735	1,302,000	10,000	80,860	2,770
1.5			30,000 (100,000)	400	7,400	16.3				5,000		
1.25						12.7						
1.0			10,000 (25,000)	400	3,600	8.92	6,860	260	200,000	2,000	24,890	852
0.75			4,000	100	1,600	5.8				1,000		
0.625						4.4						
0.500			2,000 (5,000)	200 (4 to 6)	800	3.2	1,040	92	30,800	400	6,668	228
0.375			800	200	700	2.05				300		
0.3125						1.56						
0.250			1,000 (2,000)	8	300	1.10	160	33	4,700	200	1,667	57
0.1875										100		
0.131	3.327	6	250 (1,200)	8	80					75	429.4	14.7
0.093	2.362	8								50		
0.065	1.651	10	20	20	20	0.14	3.8	4.1	110		93.4	3.2
0.046	1.168	14	12	10	12					25		
0.0328	0.833	20	10	3	8					10	19.0	0.65
0.0232	0.589	28		1.25								
0.0164	0.417	35		1.00						4	3.36	0.115
0.0116	0.295	48		1.25						1		
0.0082	0.208	65		1.25		0.0062	0.0143	0.183	0.419		0.515	0.0176
0.0058	0.147	100		0.25		0.0040	0.0066	0.119	0.192			
0.0041	0.104	150				0.002205	0.002205	0.064	0.064		0.064	0.002205
0.0029	0.074	200										

b Tech. Paper 86, USBM. *c 114 J 280, 948.*

say, 100-gm. for <65-m. material to 5 or 10 kg. of 1-in. material. Larger weights may be necessary in special cases, depending on the accuracy desired and the end in view.

Segregation. It is most desirable that the mass to be sampled be thoroughly mixed. Practical homogeneity is attained with solutions, and the maximum of uniformity, lacking homogeneity, with fine suspensions. In such cases, any part can be taken at random as an accurate sample. But in dealing with broken ore, uniform mixing is difficult. Ore as mined varies in composition from place to place and segregation increases in breaking, loading, and crushing. In crushing, some of the minerals present, owing to differences in hardness and friability, break into smaller pieces than others. Vibration of a car transporting ore tends to sift the finer and the heavier pieces down through the coarser, so that the material in the car is not uniform in value from top to bottom. If ore is transported by means of inclined chutes or launders, segregation takes place therein. Coarser pieces bound or roll down the chute while finer pieces slide slowly along the bottom. Heavier pieces tend to settle near the bottom in the sliding mass. If a chute ends in a free fall, the larger and heavier pieces, owing to their greater momenta, fall farther away from the end than the finer and lighter pieces. If the ore is piled in a heap, the coarser pieces roll down while the finer remain near the top. Thus, in order to take an accurate sample, either the material must be thoroughly mixed or the method must be so applied as to take segregation fully into account.

Table 14. Weight of coal samples

Largest size of coal and impurities in sample before division, in.	Weight of sample to be divided, lb.
1	1,000 (or more)
3/4	500
1/2	250
3/8	125
1/4	60
3/16	30

2. HAND SAMPLING

Hand sampling is usually expensive; it is slow in batch sampling and labor-wasting in stream sampling; and the personal element enters so largely that accurate results are difficult to obtain. Machine sampling should be used where possible and hand sampling applied only where material is not suitable for treatment by machine, as with sticky ore, or where machinery is not available, or the expense of its installation not justified.

Hand-sampling methods. The more common methods of hand sampling are: (*a*) grab sampling, (*b*) coning and quartering, (*c*) shovel sampling, (*d*) pipe sampling, (*e*) stream sampling.

Grab Sampling

This is the simplest form of hand sampling. It consists in taking small, equal portions by scoop or shovel at random or at regular intervals from the mass of material to be sampled. The following variations illustrate practice.

(*a*) **Large heaps** are grab sampled by taking a shovelful or scoopful at different points on the surface of the heap. The points may be located by dividing the surface into squares or rectangles, or the location may be left entirely to the judgment of the sampler. If large samples are desired, pits are dug at various points and the whole or part of the material excavated is taken for the sample.

(*b*) **Railroad cars or boats** may be sampled as in *a*. In this case a net is frequently placed over the surface of the ore and the sample is taken at the knots in the net, or the sampler measures off sample intervals from the sides and ends of the cars with a shovel or measuring stick.

(*c*) **Ore being loaded or unloaded.** Grab samples may be taken at intervals along the working faces as excavation progresses.

(*d*) **Ore being transported in small lots** by wheelbarrows, tram buckets, wagons or small cars. A GRAB may be taken from each load and thrown into a box. The box is emptied at the end of each day or shift and taken as a sample of the ore transported for such period of time.

Methods *a* and *b*, taking samples from the surface only, assume that the character of the ore does not change with depth in the heap. Correct results can hardly be expected on such an assumption on account of segregation. Method *c* is more likely to give results that are accurate, since samples are taken from all parts of the mass. Method *d* is also more commendable than *a* or *b* and should, over a long period, give a fair average with certain classes of ore. However, it is probable that the samples would run regularly high or regularly low.

Accuracy. At a small ALASKA mine (*35 SMQ 55*) a medium-grade copper ore containing chalcopyrite and pyrite in graywacke and slate was sampled by an experienced man who took a 2-lb. grab from each 1-ton car dumped into a boat for shipment. The ore was again sampled at the smelter in a mechanical sampling mill. Figures based on 2 yr. of work, with shipments ranging from 200 to

2,000 tons each, showed that the average difference in assay between grab and mechanical samples was 7.1% of the copper content and the maximum difference, 28.5%. The percentage of cases in which the grab sample was high was 55 and results were more than 10% wrong in 30% of the cases. Applying these figures to three ores running 2%, 10%, and 20% copper, respectively, errors and the expectation of errors would be as in Table 15. In this ore values did not tend to segregate in the fines to any great extent as shown by the sizing-assay test in Table 16. Usually more than 55% of the results would

Table 15. Errors in grab sampling

Item	% Cu		
	2% ore	10% ore	20% ore
Average error	0.14	0.71	1.42
Maximum error	0.57	2.86	5.72
Minimum error probable in 30% of the results	0.20	1.00	2.00

Table 16. Sizing-assay test of ore of Table 15

Mesh	Weight, %	Per cent. of total Cu
60	30.6	24.8
80	9.5	8.7
100	6.6	7.0
<100	53.3	59.5
	100.0	100.0

be high. It is general experience that grab sampling gives high results, owing probably to the fact that the sampler avoids large lumps.

Advantages of grab sampling are that it is cheap and quick. DISADVANTAGES: It is difficult, when taking a small portion such as a shovelful or scoopful, to get full representation of all sizes of particles, especially when lumps are present. Just what part of a lump or how much of the coarser and finer pieces should be taken at each grab is left to the judgment of the sampler, and either by over-zealousness or by carelessness, more of some size than is proper is almost certain to be taken. It is also practically impossible to take such an amount of material at each grab that every part of the lot shall have proportionate representation in the final sample.

Table 17. Grab samples *vs.* mill averages

Item	Case 1	Case 2
Weight of ore, tons	51,862	43,993
Value, mill average	$11.084	$10.254
Value, grab sample	$11.218	$11.193
Percentage excess of grab sample above mill average	1.20	9.17

Applicability. The ore should be crushed to 0.5-in. or smaller before sampling. Grab sampling should be applied only to low-grade or very uniform ores, or in cases where approximate results only are desired, or in order to detect salting.

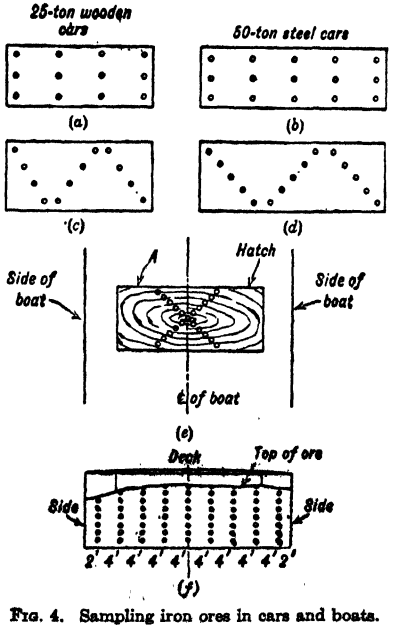

FIG. 4. Sampling iron ores in cars and boats.

Examples. MOGOLLON DISTRICT, New Mexico (*72 A 535*). The ore contained gold, silver, both native and in argentite, and pyrite, in a gangue of quartz, calcite, and andesite. Yearly averages of composite daily grab samples taken from cars at the scale seldom showed a variation of more than 10%, generally 3 or 4%, from the value determined from addition of the metal produced to that lost in tailing. (See *25 A 826*.) Comparison is given in Table 17.

Iron ores in cars or boats are usually sampled by grab sampling. The methods described below are those used by U. S. STEEL CORPORATION (*1 IEC 107*).

Car sampling. Samples of about 2 to 3 oz. are taken with a garden trowel or small scoop (3 1/2 × 2 1/4 × 1 1/4-in.) at 12 places in a 25-ton car and 15 places in a 50-ton car. Either the PARALLEL or ZIGZAG SYSTEM is used (Fig. 4, *a*, *b*, *c*, *d*). Lumps met at sampling points are sampled by breaking off a small piece about the size of the first joint of the thumb. Samples from ten cars are combined, making about 15 lb. for ten 25-ton cars and 20 lb. for ten 50-ton cars. With very lumpy ore the ROPE-NET SYSTEM is used. Knots are about 18 in. apart and the car is sampled in about 32 places. MOISTURE SAMPLE is taken at three places along the center of each car after several inches of surface has been removed.

Boat sampling. The boats range in size from 3,000 to 12,000 tons capacity, one or two decks, 6 to

36 hatches with widths from 12 to 24 ft. Ores range from very fine to all lump. The sample may be taken by small scoop (1/4-, 1/2-, or 1-lb. capacity) from grab buckets, while unloading. This method is expensive as one man is needed for each grab bucket.

Sampling of cones is the term applied to the following method: The sampler starts at point "A" (Fig. 4, *e*) directly under the edge of the hatch and midway between the center and side of the boat and takes samples at points 1 ft. apart (measured by the trowel, which is 12 in. long), up the side of the cone, over the apex and down on the opposite side, then similarly along the other diagonal. The amount thus taken is equivalent to about one-tenth of the total sample for the hatch. After the grab bucket has removed all ore within reach, samples are taken in parallel vertical lines up the face of the ore at 1-ft. intervals. The first line is 2 ft. from the side of the boat and succeeding lines are spaced at 4-ft. intervals (Fig. 4, *f*). This is repeated on the opposite face.

Round sampling is used when operation of the grab bucket makes sampling of cones impracticable or with boats with 24-ft. hatch centers and decks furnishing protection to samplers. When a 5- or 6-ft. face is exposed by the grab bucket, the sampler takes samples of the face by the same method as in Fig. 4, *f*. The amount taken on this round is about one-third of the total. The second round is taken similarly after the grab bucket has removed all ore within reach; this comprises the remaining two-thirds of the sample.

Sampling of concrete aggregate in cars is illustrative of sampling of a finite lot (see p. 02) since the number of pieces of broken stone (2 1/2–1/4-in.) is not large enough to be considered infinite. If size distribution is the quality under test, the major part of the car contents must be taken in order that the sample shall be representative of the lot within 5% with an assurance of 99%. The results of a series of tests (*42 #11 RP 41*) designed to determine human error in sampling are shown in Table 18. Five individuals, working independently, took samples that differed as to increments in weight, number, location, and method of taking, as well as to total sample weight. The divergent results shown are, therefore, not surprising; actually the test was pointless since a correct sample would take the major part of the car contents.

Table 18. Sampling concrete aggregate in cars

Size (in.)	Cumulative per cent. through					Maximum–minimum
	A	B	C	D	E	
Car No. 1						
2 1/2	100	100	100	100	100	0
2	99.4	97.8	100	96.5	97.8	3.5
1 1/2	77.4	76.7	78.2	69.3	68.2	10.0
1	38.0	37.6	40.6	21.7	18.9	21.7
3/4	15.3	15.0	18.7	5.6	4.5	14.2
1/2	3.3	1.5	4.3	0.7	0.7	3.6
1/4	0	0	0.6	0	0.7	0.7
Car No. 2						
2 1/2	100	100	100	100	100	0
2	97.6	100	99.3	98.0	97.8	2.4
1 1/2	65.0	77.6	77.3	67.6	69.4	12.6
1	34.8	44.9	41.8	25.7	32.7	19.2
3/4	15.6	23.9	22.0	10.8	17.8	13.1
1/2	3.6	7.9	7.0	2.7	4.5	5.2
1/4	0.6	0	2.1	0.6	0.7	2.1
Car No. 3						
2 1/2	100	100	100	100	100	0
2	97.5	99.3	100	98.7	97.2	2.8
1 1/2	78.9	80.1	88.7	73.7	62.4	26.3
1	42.3	41.8	58.8	31.1	27.7	31.1
3/4	19.8	21.9	36.2	12.1	14.9	24.1
1/2	5.7	8.5	14.9	2.7	3.5	12.2
1/4	1.2	2.8	6.3	0	1.4	6.3

Truck sampling may be performed by taking samples from the bottoms of holes at least 1 ft. deep located on the diagonals at points one-third and two-thirds the distance from corner to center. If more increments are desired space evenly along the diagonals. Table 19 shows results of sampling coal trucks (*143 CG 1958*). The coal was sampled at the colliery by cutting the stream delivered by loading conveyor. The loaded trucks were sampled at destination by the diagonal method, taking 8 and 22 increments.

Table 19. Truck sampling

Item	Sampling at colliery				
Truck No.	1	2	3	4	Total
Sample weight, lb.	219	249	221	159	848
No. of increments	39	36	37	29	141
Aver. wgt. of incr., lb.	5.6	6.9	6.0	5.5	6.0
% <1/8-in.	8.4	17.3	13.6	15.4	13.7
% ash <1/8-in.					
% ash, whole sample					8.1
Item	**Sampling at destination, B.E.S.A. *a***				
Truck No.	1	2	3	4	Total
Sample weight, lb.	54.5	37.5	45	41	178
No. of increments	8	8	8	8	32
Aver. wgt. of incr., lb.	6.8	4.7	5.6	5.1	5.6
% <1/8-in.	16.5	29.3	23.6	25.6	23.2
% ash <1/8-in.	18.1	16.2	13.7	16.9	16.1
% ash, whole sample	9.2	11.0	8.0	10.6	9.6
Item	**Sampling at destination**				
Truck No.	1	2	3	4	Total
Sample weight, lb.	110	99	86	79	374
No. of increments	22	22	22	22	88
Aver. wgt. of incr., lb.	5	4.5	3.9	3.6	4.3
% <1/8-in.	15.6	25.0	22.9	23.3	21.4
% ash <1/8-in.	17.5	15.9	14.5	17.1	16.1
% ash, whole sample	9.6	11.3	8.0	9.4	9.6

a British Engineering Standards Association method.

Coning and Quartering

This is one of the oldest forms of hand sampling. It was for many years the standard method of sampling throughout the western United States, especially for batches of ore whose value was to be determined between buyer and seller. It can be used on lots up to 50 tons. Where larger lots are to be sampled, the first cut is made by some other method and the sample thus obtained is further reduced by coning and quartering.

Procedure consists in piling the ore into a conical heap, spreading this out into a circular cake, dividing the cake radially into quarters, taking opposite quarters as sample and rejecting the other two. The ore should be crushed through 2-in. or smaller ring. The operation should be carried on in a room of sufficient size to allow convenient handling of material. The floor should be smooth and free from cracks, preferably smooth concrete or steel sheets; it should first be swept thoroughly clean to avoid salting from a previous lot. The ore is dumped on the floor in two or four piles, or in a circular ring. Shovelers then pile this ore into a right-conical heap conveniently placed, taking care to drop each shovelful directly onto the apex. The object of coning is to form a heap in which segregation shall be symmetrical with respect to the vertical axis. To insure this, successive shovel loads should be so taken as to contain similar sizes similarly segregated on the shovel and should be so dropped onto the cone that the segregation therein is symmetrical. This end is attained by having the shovelers take successive shovel loads from adjacent places around the periphery of the heaps from which they are shoveling and drop these loads from successively adjacent points around the cone that they are building. Each man should take a shovel load of the same size as each other shoveler, and shovel loads should be made smaller as the size of the heap being shoveled becomes less. When the material is placed in a ring the men move around the ring as they shovel onto the cone. When the ore is all heaped up into a cone, the floor is carefully swept and the fines collected are placed on the apex, not swept up against the bottom of the pile. The men then start at points near the bottom of the cone and, with their shovels held tangentially, drag the material down radially so as to form a truncated cone or flat circular cake. In this operation they should work around the cone. The cake is then marked off into quarters with a stick or board along diameters at right angles. Opposite quarters are shoveled out as reject. The remaining quarters, called the sample, are then shoveled into one or more piles or into a ring depending on the amount of material, and the coning and quartering operations are repeated until the sample is so small that further crushing is necessary before further reduction in bulk can be made. A cross made of

sheet iron or wood with sharpened edges is often used to mark the truncated cone into quarters. This is placed on top of the cake with the center of the cross directly over the center of the cone and is then pressed into the ore until it touches the floor. Such an arrangement is preferable to marking off with a single board. Lines of division will be more exact and the cross can be left in place to hold the sides of the sample quarters vertical while the reject quarters are being shoveled away. Or the cross may be laid on the floor before starting the pile and each shovelful dropped over the intersection. The cone is then spread out to the thickness of the cross and the reject shoveled away as above.

Coning does not mix the ore uniformly. As material is shoveled onto the cone the coarser pieces roll down the sides and come to rest on the floor while the finest particles remain near the apex. Pieces of intermediate size arrange themselves on the slopes of the pile according to their size. The ultimate result desired is that the segregation be symmetrical with respect to the axis of the cone. If this condition is attained, any sector taken should correctly represent the whole.

Bench or cobbing system, sometimes used to get better distribution of the material in the cone, consists in first making a small cone of some of the ore and spreading it out into a cake, then making another cone on the center of the cake and spreading it out and repeating until all the ore is thus disposed of. This method tends to reduce the effects of accidental errors in flattening the cone.

Advantages of coning and quartering are few. Expensive equipment is not required, the only tools necessary being wheelbarrows, shovels, and brooms. It can, therefore, be used in remote places where more elaborate sampling machinery is not available. It is applicable to practically all classes of ore and, in the case of small lots of high-grade material, there is no danger of such loss as might occur through leaks and holdbacks in a mechanical sampling mill. The fact that all ore is in plain sight throughout the period of sampling is probably the chief reason why this method has survived as long as it has, this being especially desirable where ore is being sampled for sale. DISADVANTAGES. The method is expensive, requiring frequent handling of the ore by crude means, and much sweeping. The danger of salting is considerable. From the standpoint of accuracy the method is susceptible, either through accident or intention, to such manipulation during the operation that a true sample will not be obtained. As the men shovel from the piles of ore or ring onto the cone, they should all push their shovels either radially or at a tangent into the piles or ring. Otherwise the coarse material will be in a different position on each man's shovel and when the ore is dropped onto the cone the coarse material will segregate unsymmetrically. Further, it is difficult to keep the axis vertical. If the axis is inclined, more fine material will accumulate on the side toward which it leans. This is called "drawing the center," and it has frequently been brought about in order to make the sample of higher or lower grade, as the operator desired. To avoid "drawing the center" a vertical rod is sometimes placed to mark the axis of the cone. When spreading the cone into a flat cake, there is danger that more fine material from the apex will be spread over one part than another. During dragging out, coarser pieces are pushed along to the outside by the shovels while the finer particles sift through and tend to remain nearer the center. As spreading progresses the finer material from the center is spread out and the cake obtained tends to have a separation of the coarser particles on the bottom and the finer on the top. There is also difficulty in spreading the last small portion of fines evenly. For these reasons chances of error are great and the effect of carelessness or willful abuse is difficult to detect.

Time and labor required. The following data are given by Johnson (*63 J 111, 132*): EL PASO SMELTING WORKS. Mexican labor, coning and quartering a 2-ton sample taken by the tenth-shovel method:

4,000-lb. lot, 4 men, 1 on wheelbarrow from platform to crusher, 1 man at crusher, 2 men with wheelbarrows carrying ore from crusher and forming circular ring, 45 min.; 4 men shoveling from ring to cone 6-ft. diam., 3.5 ft. high, 20 min.; 4 men spreading to truncated cone 9 in. high at center, 5-in. at circumference, 5 min.; 4 men cutting quarters and removing reject, 10 min.; total, 4 men, 80 min.

2,000-lb. sample; 4 men, shoveling to a ring, 6 min.; making cone, 9 min.; spreading, 3 min.; halving, 5 min.; total, 4 men, 23 min.

1,000-lb. sample; 4 men, making ring and cone, 12 min.; spreading, 2 min.; halving, 3 min.; total, 4 men, 17 min.

500-lb. sample; 4 men, sample recrushed in rolls, 10 × 20-in., 35 min.; total, 4 men., 155 min.

500-lb. sample; 2 men, sample piled in a heap, spread to a circle, pushed out to ring, 15 min.; making cone (3 ft. diam., 1.75 ft. high), 5 min.; spreading (6.5 in. thick at center and 3 in. at circumference), 3 min.; halving, 2 min.; total, 2 men, 25 min.

250-lb. sample; 2 men, sample ground in rolls to pass 10-mesh, 35 min.; making ring, 2 min.; making cone, 4 min.; spreading (5 ft. × 2 in.), 2 min.; halving, 3 min.; total, 2 men, 11 min.

125-lb. sample; 2 men, making two heaps, coning, spreading, halving, 8 min.

63-lb. sample; 2 men, making two heaps, coning, spreading, halving, 6 min.

32-lb. sample; 2 men, coning and halving, 5 min.; about 16 lb. sent to bucking room; total, 2 men, 90 min.

Labor, 4 men, 2 hr. 35 min. = 1.29 man-shifts; 2 men, 1 hr. 30 min. = 0.38 man-shifts; total, 1.67 man-shifts.

Total time to reduce 2 tons to a 15-lb. sample for delivery to assay office, 4 hr. 5 min.

Shovel Sampling

Shovel sampling, also called FRACTIONAL SHOVELING, or FRACTIONAL SELECTION, can be applied when ore is being loaded or unloaded, or moved from one place to another by

shoveling, or it may replace coning and quartering for cutting down a given lot, with intermediate coning of the sample as previously described.

Procedure. Every alternate, or every third, fourth, fifth, or tenth shovelful is taken for the sample, depending upon the size of sample permissible or desired. Common practice is to take the fifth or tenth shovels in unloading a car and to finish sampling by alternate shovels.

Advantages. Shovel sampling is applicable to larger lots than coning and quartering and when alternate shovel loads are taken, is more reliable and accurate; it is cheaper, quicker, and requires much less space. Accuracy is attained by making a large number of sample cuts, the number depending on the size of shovel used and the weight of the lot sampled. DISADVANTAGES: Shovel sampling should not be used if large lumps, say greater than 2-in., are present. It is subject to manipulation by the sampler in choosing the shovelful to be taken for the sample, both as regards the amount taken and the kind of pieces. The cheapest kind of labor is commonly employed and when other than alternate shovels are taken, it is difficult for the shoveler to keep count of shovelfuls. When ore is piled in a heap in which segregation has taken place and is sampled by this method there is considerable danger of the sample shovelfuls being taken more from either the coarser or finer parts of the heap, so that every size of material is not represented in proper proportion in the sample.

Time required by four Mexican laborers unloading a 20-ton car and taking at the same time a tenth-shovel sample is given by Johnson (*ibid.*) as 2.5 hr. At EL PASO smelter four men required 4 hr. to unload a 50-ton car of concentrate (15% moisture), taking every tenth shovel for sample (*117 J 13*). In this instance, the sample was shoveled onto boards placed across the car above the load; the sample remained in the car and was moved and dumped, samples from five cars being united.

Cost of shovel sampling varies with the character of material, moisture contained, facilities available for disposal of sample and reject, and cost of labor.

The labor cost of the old method of sampling wet, sticky flotation concentrate at GARFIELD smelter, consisting in taking every 15th or 20th shovel for sample and cutting down further by alternate shovels, was from 6¢ to 8¢ per ton of concentrate before 1917 and 20¢ in 1920 (*122 P 17*).

Method for high-grade silver ore. Ore from Cobalt (*17 CMI 239*), <0.25-in., was discharged into wheelbarrows and distributed in a long narrow ridge. The ridge was turned over once by shoveling and a new ridge formed, then divided by alternate shoveling into two ridges, the shovelfuls being carefully distributed over the tops of the ridges. These two ridges were each divided into two other ridges by the same method, four ridges resulting. Further reduction of each ridge was then made by successive crushing and riffling. Table 20 gives the assays of samples from each of the four ridges with five different ores and indicates that this method gives good results even on ores as difficult to sample as these.

Table 20. Results of shovel sampling Cobalt silver ores

Ridge	Silver, ounces per ton				
	A	B	C	D	E
No. 1	2,269.7	2,082.8	1,527.7	535.8	353.3
No. 2	2,263.6	2,079.2	1,533.0	538.5	355.1
No. 3	2,260.7	2,072.6	1,528.6	540.1	358.6
No. 4	2,267.2	2,080.4	1,526.2	554.5	355.1
Average	2,265.3	2,078.8	1,528.9	539.7	355.5
Maximum deviation from average, oz.	+4.4 −4.6	+4.0 −6.2	+4.1 −2.7	+4.8 −3.9	+3.1 −2.2
Maximum deviation, per cent. of total	−0.2%	−0.3%	−0.3%	+0.85%	+0.9%

Combination of hand-sampling methods has been adopted as a standard method of sampling coal for analysis (*ASTM D 21–40*). The original or gross sample of 1,000 lb. for ordinary lots (or 1,500 lb. when large pieces of impurities are present, or 500 lb. for slack or smaller sizes of anthracite) is taken by grab sampling or shovel sampling during unloading. The amount taken at each grab or shovelful ranges from 5 to 10 lb. for slack and smaller sizes to 10 to 30 lb. for run-of-mine coal. The sampling interval depends on the size of lot. When taking the sample from bottom-dump cars, while unloading, a special "ladle" is used having a handle 5 ft. long and bowl 1 ft. in diameter at top, 9 in. at bottom, and a depth of 9 1/2 in. The "ladle" holds from 25 to 30 lb. of coal. Generally two ladlefuls are taken from each car by holding the ladle underneath the car when dumping. The gross sample is cut down by alternate shoveling to 250 lb. and coning and quartering to 15 lb. as follows:

1,000-lb. gross sample. Crushed to 1-in.; mixed by shoveling into a conical pile, then shoveled into a pile 5 to 10 ft. long and alternate shovels taken giving a ***500-lb. sample,*** which is crushed to 3/4-in. and treated as above, giving a ***250-lb. sample.*** This is crushed to 1/2-in., mixed, by shoveling,

into a conical pile and then shoveled into another cone, flattened and quartered, giving a ***125-lb. sample,*** which is crushed to 3/8-in., placed on a blanket or canvas (6 ft. × 8 ft.), mixed by rolling, coned by drawing up the ends of the cloth, then flattened and quartered, giving a ***60-lb. sample.*** This is crushed to 1/4-in., placed on the blanket and the preceding operation repeated, giving a ***30-lb. sample*** which is crushed to 3/16-in. and again subjected to rolling, coning, flattening, and quartering, giving a ***15-lb. sample.***

Every precaution as described in Art. 3 is taken in forming the cones and shoveling from them. The first shovelful for forming the long piles is spread out in a straight line, having a width equal to the width of the shovel and length of 5 to 10 ft. The next shovelful is spread directly over the top of the first but in opposite direction and so on, back and forth. The pile is occasionally flattened during this procedure. Alternate shoveling from the long pile begins at either end on one side and successive shovelfuls are taken the width of the shovel apart as the shoveler advances along one side and around the pile, always in the same direction. Crushing may be done mechanically or by hand with an iron tamping bar or sledge on a sheet-iron plate or solid floor. Flattening of the cone is accomplished by pressing the apex vertically with the flat of the shovel or a board.

Time required. According to Morrow and Proctor (*loc. cit.*) time required for *ASTM* procedure on a 1,000-lb. lot of <4-in. coal, one man working, was, in hours: Crushing 1,000 lb. from <4-in. to <1-in., 4.0; forming long pile, 0.75; dividing <1-in., 0.25; crushing 500 lb. <1-in. to <3/4-in., 2.67; forming long pile, 0.17; dividing <3/4-in., 0.08; crushing 250 lb. from <3/4-in. to <1/2-in., 1.08; coning and quartering <1/2-in., 0.12; crushing 125 lb. from <1/2-in. to <3/8-in., 0.75; rolling 10 times, coning and quartering <3/8-in., 0.17; crushing 60 lb. from <3/8-in. to <1/4-in., 0.83; rolling 10 times, coning and quartering <1/4-in., 0.12; crushing 30 lb. from <1/4-in. to <3/16-in., 0.92; rolling 10 times, coning and quartering <3/16-in., 0.05; total, 11.96. Others report that the time required to collect and prepare samples according to this method ranges from 13 to 16 man-hours, depending upon the friability of the coal. Charging labor at the rate of $1.50 per hr. the cost for preparing a sample is about $18. Total cost of sample and analysis is almost prohibitive except for large shipments.

Trench sampling (*Smith, loc. cit.*) consists in spreading the ore out into a flattened square or rectangle, about 2 or 3 ft. thick with 100-ton lots and from 1 to 2 ft. thick for smaller lots, and cutting trenches through the cake about 1 ft. wide, crossing at right angles at the center. All material thus excavated is taken for the sample, or alternate shovelfuls may be taken. Sometimes all of the material from the trenches is rejected and samples are taken with a shovel from the sides of the four piles left. The accuracy of this method depends on the degree to which material is mixed before making the flattened rectangle. If the rectangle is made by spreading out from a cone, the sample will probably contain too great an amount of fine material, as the same width of cut is taken from the center as from the edges. (See Art. 3.) As the sides of the trenches take the form determined by the angle of repose of the material, it is difficult to be sure that the same proportion of ore is taken from the top as from the bottom, and if there is a difference between the top and bottom layers, the sample will not be accurate.

Quartering shovel (Fig. 5, item *a*) is about 10 in. wide, with flanged edges and two partitions on the blade dividing it into three spaces. The two outside spaces cover three-fourths of the area of the shovel blade and are open at the back. The center space, about 2.5 in. wide (one-fourth of the area) is closed at the back. The sampler pushes the shovel into an ore pile and then, with a quick rotary motion, swings the loaded shovel. The ore in the two outside spaces slides off the back of the shovel and goes to the reject, while the portion in the center space remains on the shovel and is thrown into a wheelbarrow or other receptacle as the sample.

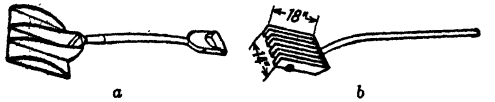

FIG. 5. Sampling shovels.

This device does not give accurate results. There is a tendency for fines to be more in evidence in the central space and coarser pieces in the two outside spaces. The method is seldom used, as it offers no advantages over fractional shoveling and is less accurate.

Split shovel or U-SHOVEL (Fig. 5, item *b*) is made up of several troughs, generally about 12 to 18 in. long, 2 in. wide, and 2.5 to 4 in. deep, with intervening spaces of the same width. Material to be sampled should be crushed to 0.5-in. or less. The shovel is laid on the ground or held by an operator and another man shovels the ore onto the split shovel with a square-end shovel. When the troughs are filled, the first man throws the split-shovel load to the sample heap. The troughs must not be allowed to overflow.

This method is slow, requires two conscientious and careful men, and is not as accurate as the alternate-shovel method.

Pipe Sampling

Several varieties of pipe or GUN SAMPLERS are used. The simplest form consists of a piece of pipe (0.5-, 1-, or 1.5-in. diam.), one end with sharpened edge, the other fitted with a

tee and two short nipples to form a handle. The pipe should be long enough to reach the bottom of the heap to be sampled; it is thrust vertically to the bottom at regular intervals, and then withdrawn, and pounded with a hammer to release the sample.

In Montana (*121 P 866*) the usual method is to make insertions of pipe in parallel rows spaced at 2-ft. intervals. The pipes are 4 to 5 ft. long, 3-in. diameter at top and 2-in. at the cutting edge. About 250 lb. is usually obtained from 40 to 75 insertions of pipe. Two men should sample the material in a 50-ton car in about 30 min.

Forms. Several forms are shown in Fig. 6. Form *A* consists of pipe and fittings made up as above, with a longitudinal slot cut out. It is pushed into the mass to be sampled, twisted around until filled, and then withdrawn. Form *B* is made up of two such slotted pipes, one smaller than and within the other. It is pushed into the ore with the pipes in position *a* until it reaches the bottom. The handle is then turned until the pipes take position *b* and is twisted back and forth until the inner pipe is filled with material. The pipes are then again turned to position *a* and withdrawn and emptied into the sample box or sack.

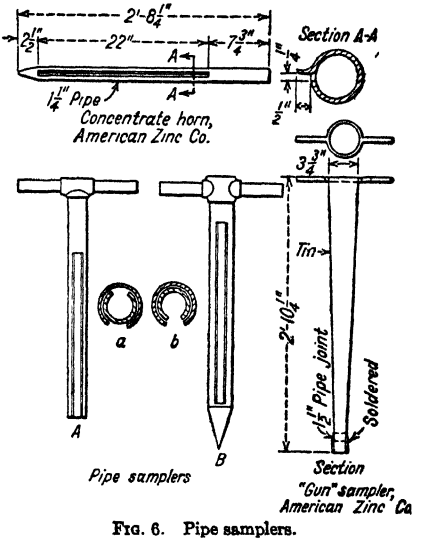

FIG. 6. Pipe samplers.

Applicability. Pipe samplers are satisfactory for sampling fine concentrate in railroad cars or bins, provided the material has not packed down too hard. They are also used for sampling sand in vats before or after treating with solution in percolation extraction processes. They can be used on tailing heaps or on any finely crushed ore. Small pipe samplers are used for sampling material in sacks or cans.

Accuracy. Pipe sampling, although used considerably because it gives quick results at low cost, may lead to serious errors unless the material is well mixed, in which case grab samples, taken with a spoon or the like, will do just as well. Wright (*34 CEMR 73*) has demonstrated that pipe samplers of form *A*, Fig. 6, yield samples representative of the top 3 or 4 in. and not of the underlying material, because when the sampler is inserted, a cross-section of the first few inches is forced up the pipe, and thereafter the frictional resistance of this plug is so great that no more material can be forced in. The operator does not notice this resistance because the wedge action of the point enables easy penetration of the material. A bag three-quarters full of sand with an overlying 4-in. layer of cassiterite was sampled with a pipe sampler of type *A;* the sample assayed 99.5% cassiterite. The use of wider longitudinal slots reduces the sampling error somewhat. Pipe samplers of type *B* give uniformly better results providing slot width is large compared with maximum particle size.

Auger samplers are used in the same manner and on the same classes of materials as pipe samplers. They have the advantage that they can be used on material that has packed so hard that it is difficult to force a pipe sampler into it.

Use of a ship auger to sample an old tailing pile was described by Sabin (*136 J 444*). The extension shanks were made of 3/4-in. pipe cut in suitable lengths, with a short nipple on the upper end, to which a T-handle was fitted with a quickly detachable device like that used in a pressure-grease fitting. Raising of pipe and auger was accomplished by means of a snatch block on a tripod which carried at the apex a guide for the pipe. The ship auger worked well in damp slime; the sample packed in the helical groove; a 12-in. auger pulled about 6 in. of core per lift.

For sampling sands a post-type auger, having two parallel curved blades 7 in. long, appropriately sharpened and shaped for digging at the points, was used. To prevent caving at the collar of the hole and to avoid losing sample by spill, a 16×16-in. box with a hole in the bottom was placed over the hole and a short length of 2 1/2-in. pipe with a sleeve on one end was driven into the hole up to the sleeve. Handling of the pipe was facilitated by putting dogs on the box, consisting of two V-shaped irons made of 2×1/4-in. flat stock, hinged at opposite ends of the box so that the apices overlapped in the center above the hole. A near semicircle was cut in each apex, preventing downward movement of the pipe. A stop was placed under each dog to hold it just in contact with the pipe; pressure exerted on the dogs by the operator's foot induced friction sufficient to support the pipe.

Sampling Wet Streams

Hand sample cutters are used for wet pulp in practically all plants; in some plants all wet sampling is done by hand; others use hand sampling only for taking special and occa-

sional samples. Three forms are shown in Fig. 7. Hand sample cutters should be held with the edges perpendicular to the direction of motion of the cutter and passed completely through and out of the stream in one direction with a movement as nearly uniform as possible. The best results are obtained by taking cuts at regular intervals of time and by so using the cutter that its operation approaches that of a properly run mechanical sampler. The cutter should be large enough so that there is no danger of overflow while

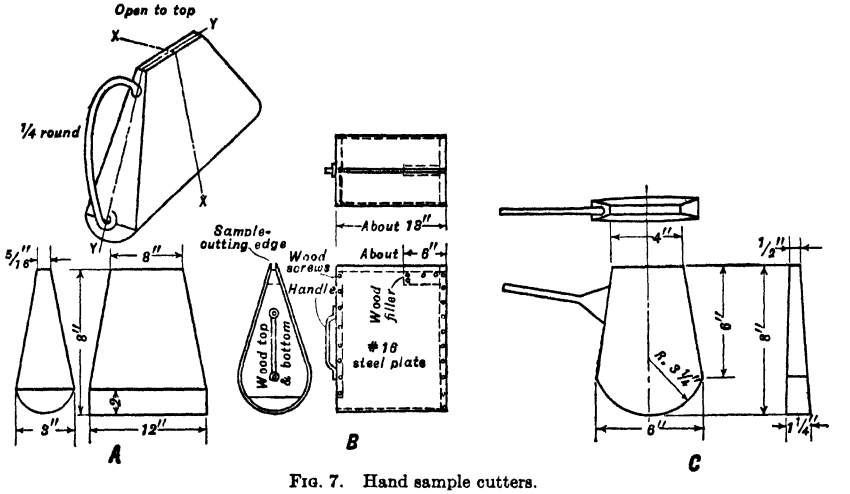

FIG. 7. Hand sample cutters.

making one passage through the stream of pulp. The aperture should be at least four times the diameter of the largest grain in the pulp; the cutter should be smooth inside, watertight, and designed to clean itself readily.

Sampling liquids. See p. 36.

3. SAMPLING MACHINES

Automatic machine samplers are devices designed to substitute mechanical processes for the undesirable human element in hand sampling. By so doing they lessen or eliminate the accidental and intentional errors introduced by the personal factor, shorten the time required for cutting a sample, and reduce the amount of operating labor. Against the reduction in labor and time are to be charged the consumption of a small amount of power, a capital investment with attendant interest and amortization, repair and maintenance charges. Further, in a custom sampling plant, cleaning out between different lots of ore is a tedious and difficult job. Machine samplers have difficulty in handling sticky ore.

The fact that ore being machine-sampled is not in sight throughout the operation in a custom mill delayed the substitution of machine for hand methods, but at present practically all large custom mills use machine sampling and find marked advantages in the ease and uniform accuracy of operations.

Sampling machines require the ore in motion in order to present it to the cutters as a thin ribbon or stream. They are of two general types: (*a*) Those that take part of the stream all the time (stationary devices); (*b*) those that take all of the stream part of the time (moving devices).

Stationary Machine Samplers

Principle. Stationary samplers are devices that divert a part or parts of a moving stream of material out of the stream, as a sample. Those which divert a single part only are designed on the assumption that the stream is uniform across its section in the characteristic sampled for. This is true only in a stream composed of a homogeneous single phase, *e.g.*, a well-mixed liquid solution; it is never true of a two-phase stream such as solid or gas in liquid, nor of a stream of broken solid. Generally the material in a moving stream varies more irregularly and less gradually in a transverse section than along its direction of flow. In broken ore sliding down an inclined chute, the coarse pieces slide

on top and toward the center, while the fines are on the bottom and against the sides. When such a stream changes direction, the coarser and heavier pieces are carried to the far side of the chute, owing to their greater momentum, while the finer particles are not carried so far. The result is a stream made up of coarse on one side and fine on the other, which does not subsequently mix and become uniform. The following conditions may cause similar results (*A. W. Warwick, Notes on Sampling*, Industrial Print. and Pub. Co., Denver, 1903): (*a*) Two elevators throwing ore into the same chute, one elevator raising low-grade ore and the other richer ore; if the streams do not cross, little mixing takes place. (*b*) Feeding an elevator from the side instead of from the front. (*c*) Irregular feed of coarse and fine material to a crusher, or coarse material on one side and fine on the other; (*d*) anything that produces an eddy causes segregation between different sizes in an ore stream. Stationary cutters can not be expected to deliver an accurate sample unless ore is presented thoroughly mixed.

Whistle-pipe sampler in its simplest form consists of a vertical iron or steel pipe with notched openings cut halfway through the pipe, each opening spaced 90° horizontally from the preceding. Rectangular steel plates are placed in the notches so that top edges coincide with a diameter of the pipe. Above each notch is placed a hopper-shaped cast-iron liner which gathers the ore into a compact stream before presenting it to the dividing edge. Ore is poured into the pipe at the top. When the stream reaches the first splitter, half is deflected outside the pipe and falls into the enclosing bin or housing as reject. The remainder continues down the pipe and is halved by each succeeding edge. The portion passing the last cutter constitutes the sample. Weight of sample is $1/2^n$ part of the total fed, where n is the number of splits.

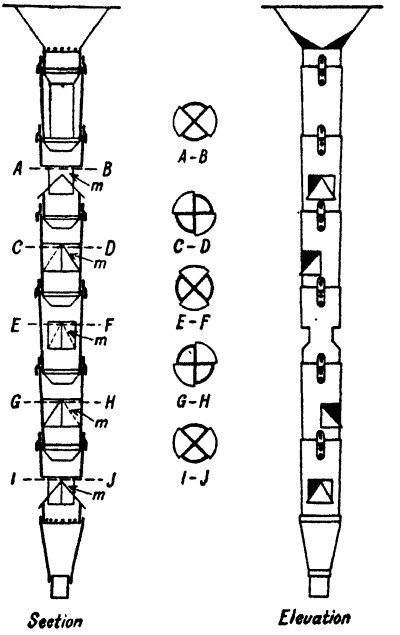

FIG. 8. Whistle-pipe sampler.

Fig. 8 (*Warwick*) shows details of an improved type of whistle-pipe sampler, in which material is fed at each cut to a splitter m that divides the stream into quarters. Opposite quarters are rejected, the other two continue and are again split in the same manner. In this design deflectors are spaced at 45° horizontally.

ADVANTAGES of whistle-pipe samplers are cheapness of installation and operation, simplicity, and quick reduction of bulk. No power is needed. DISADVANTAGES are such as to preclude their use when an accurate sample is desired. In the simple type first described, wear on the cutting edges causes displacement thereof so that a changing proportion of the stream is taken as wear progresses. The improved design with vertical cutting edges dividing the stream in quarters avoids this disadvantage. Fuse, waste, rags, wood, and similar materials catch on cutting edges and cause improper splitting and may clog the openings. Clogging cannot be detected during operation. The general objections to machines that cut part of the stream all the time also apply. Uneven wear of cast-iron liners may cause segregation. No opportunity is afforded for recrushing between cuts, hence the whole lot must be reduced to a size commensurate with the bulk of the final sample. Expense of such crushing would be out of the question in a custom sampling mill, and would not be justified in any mill where the ore could be treated in a coarser state than sampling demanded.

Single-split samplers consist of a splitter or divider placed in such a way in a stream of material issuing from a launder or chute as to continuously deflect a portion of the stream into a sample hopper or container. They are more inaccurate than the whistle-pipe samplers and have little to commend them.

Riffle is a stationary sampler for continuous diversion as a sample of a plurality of slices of a stream, parallel to the direction of flow, and usually equally spaced across the stream. It is most used in cutting down large samples by hand to assay weight, but may be used for initial sampling of a mill stream.

Jones riffle (Fig. 9, item *A*) is the most satisfactory device with which to make final reductions in bulk of sample prior to delivery to the assayer. It consists of an assembly comprising an even number of equally sized chutes, adjacent chutes discharging at opposite sides. Ore is fed to the riffle from a scoop. Jones riffles may be procured in the following sizes, or may be made up in any good tin shop.

A form (McCann) in which the sample boxes are placed touching a vertical divider plate permits shorter troughs, which clog less and are easier to clean.

Dimensions, in.	4 × 4	6 × 6	10 × 10	10 × 18
Width of troughs, in.	1/2	1/2	3/4	1
Number of troughs	6	8	10	18

Flat riffle (Fig. 9, item *B*) is used for the same purpose as the Jones riffle, but is less convenient. It has alternate slots closed at the bottom so that half of the material fed is retained in alternate troughs while the other half falls through. In using this riffle, care should be taken that the closed troughs do not fill up and overflow into the open troughs.

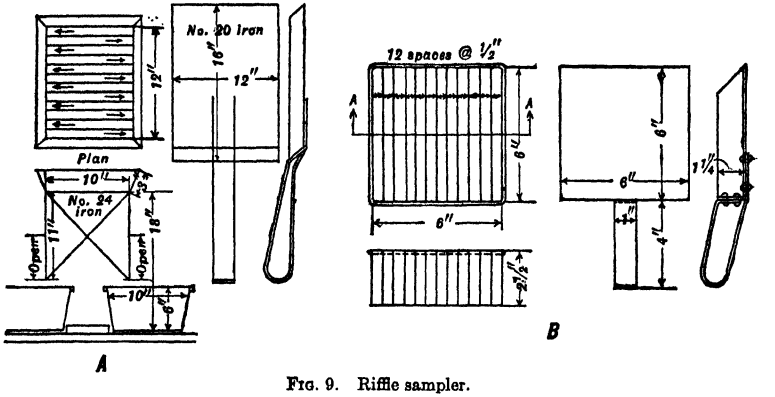

Fig. 9. Riffle sampler.

Use of riffles. Riffles should be of strong construction and carefully handled. Rough treatment causes distortion of the dividing edges between chutes with consequent inaccuracies in samples. Chutes should be wide enough to prevent bridging by coarse particles—at least three times the diameter of the largest particle in the feed and better more. Feed scoops should be of the same width as the total combined width of the riffle chutes; if greater, end chutes receive an undue proportion; if less, chutes receiving the edge of feed stream are underloaded. The same number of riffles should discharge each side, if it is desired to split into halves. Some manufacturers furnish riffles with an uneven number of chutes, so that both end chutes discharge the same side. This will cause material discharged on the favored side to contain an undue proportion of coarse material as well as to weigh more than the other portion. Such riffles should be rejected. Material should be spread evenly across the full width of the feed scoop and delivered to the riffles well toward the center. A good way to feed is to place the loaded scoop with ore at rest thereon so that the edge rests on top of the riffle-chute dividers along a line perpendicular to these and near the edge farthest from the operator; then draw the scoop smartly from under the charge, allowing it to fall evenly on the riffle. It is desirable to keep the edge of the scoop straight and to avoid a scoop that, through long usage, has a turned or uneven edge. For the most accurate work the riffle should be level.

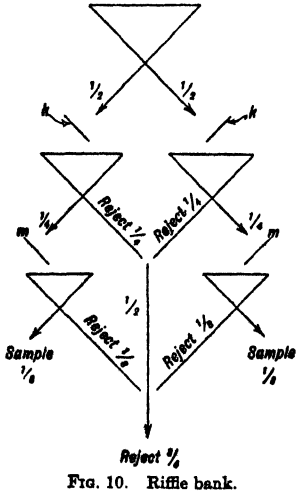

Fig. 10. Riffle bank.

Accuracy of riffle samples was investigated by T. Morris (*CU*) and found to decrease as the ratio of chute width to maximum particle size increased. Using an artificial mixture of 10~14-m. pyrite and quartz, assaying 35% pyrite, with a riffle having chute widths of 3/16-in., ten 100-gm. lots were riffled and the samples assayed, giving an average result of 35.0 ± 0.01%. Using a 3/8-in. riffle the average of ten runs was 35.2 ± 0.21%, with a 3/4-in. riffle an average of 35.1 ± 0.45% was obtained. This result is in accord with the increment theory (Art. 1); the smaller the chute width the greater the number of increments in the sample.

Bank or combination riffles are usually made of five sets of riffles arranged as shown in Fig. 10 (*TP 86 USBM*), each riffle made up of a number of troughs of equal width, separated by cutting edges, adjacent troughs discharging in opposite directions. Material is fed in a uniform sheet over the first riffle and split into many streams. Half of these discharge one side and half the other. Discharges from the first riffle impinge on inclined plates *k* and fall to a second set of riffles, smaller than the first. These riffles produce

four main streams, two of which unite and pass in to the reject, while each of the others falls to deflecting plates *m* and then to a third set of riffles, smaller than the second, which again halve the streams. One-half from each of the last riffles is rejected, while duplicate samples, each representing one-eighth of the whole, are furnished by the others. The riffles are supported by a rigid frame or may be so hung that one or more sections can be swung across a falling stream of ore. Such combinations are used for both wet and dry pulps, usually at fine sizes.

This machine makes many cuts of the ore stream and, therefore, has ADVANTAGES over methods that make only two or four cuts. It is simple of operation and, as it is generally used on fine ore, wear on the dividing edges is not great. The DISADVANTAGES are that the device is one of the class that

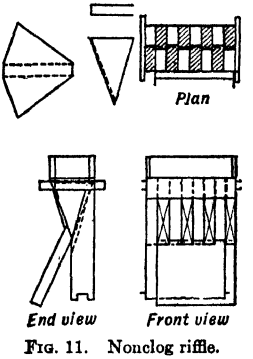

FIG. 11. Nonclog riffle.

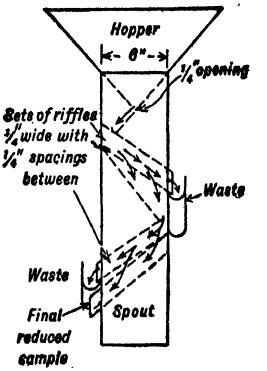

FIG. 12. Wet riffle.

cuts part of the stream all the time; construction is not simple; great care is required to insure that each compartment is of same width as others; there is a possibility that during operation dividing edges will become bent or knocked out of shape so that they do not make a proper division; damp ore and foreign waste clog the riffles, and clogging may not be discovered for some time on account of inaccessibility. Clogging causes one part of the riffle to take no sample or deflects too much into the sample. Tapping with a hammer will obviate clogging, but may deform the riffle edges. If the feed is not carefully delivered to the first riffle, segregation of the coarse and fine material is probable, producing an improper sample. Damp, fine material sticks to the deflecting plates and may cause deflection of coarse pieces with resulting segregation. Riffles are sometimes swung or shaken to avert clogging and segregation.

Nonclog riffle bank (Fig. 11) is used by DETROIT EDISON CO. (*7 #4 C 10*). A bank constitutes 8 riffles. Sample is taken from the vertical spouts of each riffle and thus gains momentum, whereas the sloping discharge chutes of the conventional design cumulatively convert initial momentum into a horizontal component that is lost at each reversal. Clogging is reported substantially eliminated.

Wet riffle (Fig. 12) is used primarily in cutting down large pulp samples, before drying, to a sample size necessary for assaying.

Cone sampler (Fig. 13) was developed to cut down large volumes of coal (*12 #3 Fuel 93*). It consists of two co-axial cones *C* and C_1, so mounted as to enclose an annular space, wherein are fitted two chutes *B* and *B'* diametrically opposite one another. The chutes extend from *A*, near the base of the inner cone *C*, beyond the lower edge of the 2-cone structure, which terminates at the lower edge by junction with the upper rim of reject hopper *D*. Outer cone C_1 terminates at the top in a short cylindrical tube *T* above which is fitted a slide valve *V* and hopper *H*. The apex of the cone *C* projects well up into tube *T*. Slide-valve *V* consists of two overlapped plates with a square aperture cut in each; motion is coupled by the three-link mechanism shown; the holes register over tube *T*.

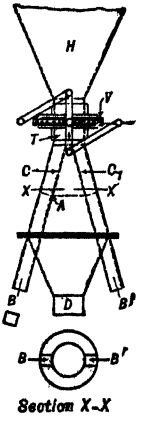

FIG. 13. Cone sampler.

Procedure is to charge hopper *H* through a funnel held coaxially, thus producing in *H* a conical heap. This tends toward uniform radial distribution. Slide *V* is then pulled and coal flows uniformly into tube *T* onto the apex of *C*. Chutes *B* and *B'* intercept samples. Products fall into suitable containers.

Weight of sample is determined by the ratio of the combined areas of the chutes at *A* to the area of the annulus at this plane. Hold-up is prevented (with coal) by using cone angles of 75° and a hopper angle >45°. The width of the annular space and the diameter of tube *T* should be at least five times the limiting size of the material to be sampled.

Accuracy of this apparatus depends almost entirely on the uniformity of axial distribution attained by coning the feed by funnel loading in hopper *H*, and upon the uniformity of the draw through the opened slide. Tests on mixtures of <1/4-in. clean coal and washery dirt were sampled by coning-and-quartering and by riffling, and in each case the rejects were sampled in the cone apparatus. Maximum deviations of ash analyses from average in the case of cone *vs.* riffle samples (5 tests) ranged from −0.32 to +0.33, and for cone *vs.* coning-and-quartering (5 tests) the range was from −0.45 to +0.45. MAXIMUM DIFFERENCE between cone and riffle samples was 0.55, and between cone and cone-and-quarter, 0.70. MAXIMUM DEVIATION from average should be ±0.2 and the maximum difference between two samples 0.4, for an 11.5% ash content.

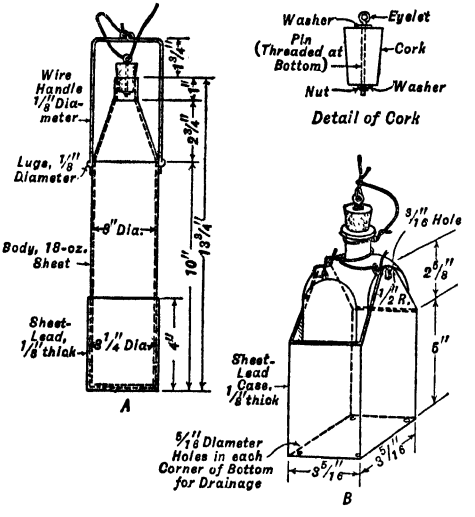

FIG. 14. Containers for bottle sampling (*after A.S.T.M.*).

Sampling liquids. Methods vary according to whether the liquid is stationary or in movement.

Stationary liquids in tank cars, tank trucks, ship tanks, or the like, are sampled by means of a weighted bottle of suitable capacity. Two forms recommended by *ASTM D 270–33* are shown in Fig. 14. Five samples are taken, one with the bottle mouth 1/10th of the depth of the liquid below the surface, three at mid-depth, and one 1/10th of the depth from the bottom. These are composited to give the tank sample. For horizontal cylindrical tanks eight mid-depth samples are taken. To take the sample, the stoppered bottle is lowered to the proper depth and there uncorked by a quick jerk on the string; when full, as evidenced by cessation of air bubbles, it is withdrawn quickly.

Can- or drum-contained liquids may be sampled by means of a glass or metal thief, two forms of which are shown in Fig. 15. In form *A*, the top hole is closed by the thumb and the thief thrust into the container to the desired depth, the thumb is removed to allow liquid to enter and replaced for withdrawal of sample. Samples taken from different levels are composited. Size is proportioned to the container. Form *B*, suitable for tank

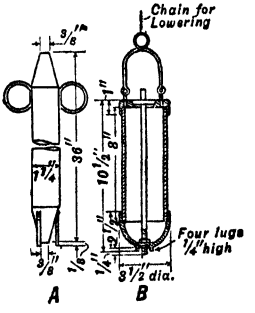

FIG. 15. Thiefs for sampling liquids (*after A.S.T.M.*).

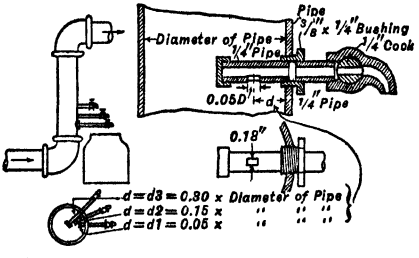

FIG. 16. Enclosed-stream sample connection (*after A.S.T.M.*).

cars, fills from a fraction of an inch from the bottom when the pin strikes and lifts the conical top and bottom valves.

Flowing liquids may be sampled by means of a dipper or a pulp sampler when a free or open discharge of a stream exists, otherwise they are sampled by bleeding the pipe within which they flow. This is done by drilling and tapping the pipe to take a bushing, which holds a short nipple capped at one end and slotted as shown in Fig. 16. A plug cock is attached externally to the bushing by means of another nipple. If desired, two or three such bleeders, radially disposed around the pipe, may be used to insure sampling of all portions of the stream. If the pipe diameter is too small to permit insertion of

bleeders, a short vertical nipple of 2-in. pipe is inserted into the pipe line at some suitable point and the bleeders attached to this nipple. In operation, the cocks are opened as nearly as possible to the same angle of opening and the drips from each cock are caught in a common sample container.

Thin liquid pulps containing fine particles may be sampled in much the same way that liquids are sampled, if not too great precision is required.

One such approximation, used at KALGOORLIE STATE BATTERY (*116 Aa 571*) to cut down larger samples, is shown in Fig. 17. It consisted of an 18-in. cone *A*, of about 6-gal. capacity, mounted on a light angle-iron frame, a head-frame *C* carrying a slotted stirrer *D*, and four outlet pipes *E*, controlled by a common plug at *B*. Head-frame and agitator were removable to facilitate cleaning. Pulp was first thoroughly agitated by turning hand crank *F*, whereupon plug *B* was released by the handle shown and four samples were run to separate containers.

THIEF was used to obtain the results shown in Sec. 15, Figs. 19 to 21; the consistency in variation from point to point indicates reasonable accuracy. DIP SAMPLES are not, however, to be depended upon for liquid pulps of any degree of fineness, for the reason that, if agitation is sufficient to prevent gravitational separation the probability is very strong that it will cause inertial segregation.

Jones riffle with 1/8-in. slots, fitted with a feed hopper, is used at WRIGHT-HARGREAVES (*145 #6 J88*) to split wet pulps.

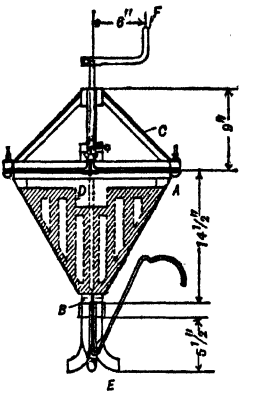

FIG. 17. Kalgoorlie distributor splitter.

Moving Machine Samplers

Principle. These samplers are designed to take all of the stream a part of the time. Their performance, as judged by the accuracy of the samples, depends upon the speed with which the stream is cut and the frequency of the cuts. The setting of these variables by the operator should be made according to the known variability of the stream along its length and across its section. Constant variability in cross-section, no matter how complex, presents no difficulties provided the stream is cut at a uniform rate, so that the same amount of material is taken from every element of cross-section. In Fig. 18, item *A*, the parallelopiped *ABCDEFGH* represents the stream, and planes *K* and *L* the limiting planes of the portion of the stream taken by the cutter. The curves *IJ* (GRADE CURVES) are so constructed that the areas thereunder represent weight of valuable mineral and are all identical, *i.e.*, the value changes across the stream but not longitudinally. The volume of material taken by the cutter depends upon the inclination of the limiting planes *K* and *L* to the cross-sectional plane *ABCD*, the greater the inclination the larger the volume taken. This inclination depends upon the relative rates of movement of

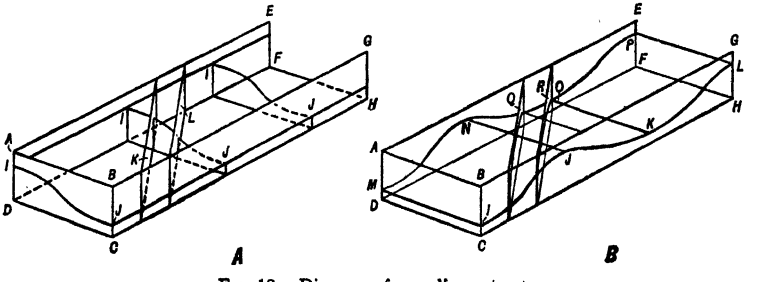

FIG. 18. Diagram of sampling cuts.

cutter and stream. Assuming these rates constant, at values not necessarily equal, it follows, since the inclination of the planes *K* and *L* is constant, that the same volume of the stream will be taken per cut. It also follows that volume taken per cut below the surface generated by the grade curves *IJ* will also be constant, and since the ratio of this volume to the volume of the cut is the assay, the assay will be constant. This is true no matter how complex the cross-sectional variability, provided there exists no longitudinal variability and provided cutter and stream velocities are constant. If the stream rate increases when the cutter is in the high-grade region of the stream, the assay of sample will be high; a similar result is obtained if the cutter slows down in this region, assuming constant stream rate; the converse is, of course, also true.

Longitudinal variability, in the absence of sectional variability, is shown in item *B*, where *IJKLMNOP* is the "grade" surface of the stream *ABCDEFGH*. It is apparent from inspection of this diagram that the volume, below the "grade" surface, intercepted by the limiting planes *Q*, *R* of the cut will, in general, be different for different cuts, unless the grade surface is harmonic. In this case, the frequency of the cuts must equal the frequency of repetition of the surface. Mathematical study of this problem leads to several conclusions of practical importance.

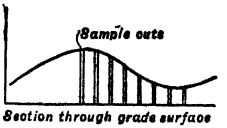

FIG. 19. Spacing sample cuts for harmonic longitudinal variation.

1. *Grade surface repetitive.* Two methods of obtaining correct samples may be used, *viz.*, (*a*) increase cutter speed so that limiting planes are nearly parallel with cross-sectional plane *ABCD* and divide the wave length into a number of increments in accord with the accuracy desired, speed from increments located at the *maxima and minima* of the grade surface (see Fig. 19); (*b*) if the cutter speed cannot be increased to the rate required by (*a*) it should be decreased to such a rate that one end of the limiting planes intercepts a minimum and the other end intercepts a maximum. This procedure is not feasible when the wave length is long because the sample will be too large. Other frequency patterns yielding accurate samples may be determined.

2. *Grade surface nonrepetitive.* Any constant cutter frequency and cutter speed will, over a short period of time, give accurate samples. As a matter of fact, cutter speed and frequency may be variable and still provide accurate samples provided the patterns of cutter variation and grade surface variation are in no way synchronized to miss maxima or minima consistently.

Longitudinal variability is more prevalent than is commonly supposed, especially with spotty ores, or when sampling follows a machine that is not fed at a constant rate or with a constant grade of feed, or when sampling the discharge of a bin wherein stratification of values has occurred. The well-known accuracy of machine-cut pulp samples is due not only to the larger number of particles taken per unit weight of sample, but also to the usual slight longitudinal variability, although cross-sectional variability may be high.

When streams are variable in both directions, the best practice appears to be to maintain uniform cutter and stream speeds, thus eliminating errors due to cross-sectional variation in value, and to adopt a cutter frequency depending upon the characteristics of the longitudinal variation.

Requirements for accurate machine sampling are:

1. The sampler should take the whole of the stream part of the time.

2. Equal percentages should be taken from all parts of the stream. This necessitates that the cutter travel at a uniform rate while passing through the stream, and the scoop move completely across and out of the stream at each cut; otherwise one side will be unduly weighted in the sample.

3. The interval between cuts should preferably be constant.

4. Cuts should be frequent enough to insure representation in the sample of the most abrupt change in the character of the stream.

5. The distance between cutting edges should be great enough to allow the largest pieces of material free passage between them; this distance should be at least three times the diameter of the largest piece, better four times or more.

6. The depth of the scoop should be sufficient to prevent material from bounding or splashing out.

7. Scoops with closed bottoms should be large enough to hold all of the material taken in one cut without danger of overflowing. The opening to discharge the sample should be large enough to empty the scoop quickly and prevent sedimentation.

8. Feed should be constant; if the stream is intermittent, the cutter may receive no sample during some of its passages.

9. Speed should not be great enough to knock away pieces that should go into the sample. In a revolving sampler, speed should be so low that centrifugal force will neither throw material out nor prevent discharge.

10. The stream delivered to the cutting edge should be as narrow as possible in order to minimize the time of passage of the cutter therethrough. The limit of this contraction is determined by the size of the largest particle.

11. The ore should be thoroughly mixed and all devices that tend to cause segregation eliminated.

12. The drive should produce uniform motion of the cutter. Relatively high speeds prevent jerky motion. Loose belts should be avoided. It may be advantageous to reduce from a high-speed belt-driven countershaft by gears.

Dry- *vs.* wet-pulp sampling. The fundamental difference between these two sampling problems lies in the difference in maximum particle size that ordinarily goes with the difference in moisture content.

Dry feeds are ordinarily relatively coarse and nonhomogeneous; consequently large samples are required, made up of a large number of cuts. For this reason the samplers usually run continuously, and timing of cuts is done by the sampler-driving mechanism as a pure incident of its function in moving the sample cutter. As a result, most dry samplers are of arc-path types, rotary motion being most simply available.

Wet feeds are normally fine and either well mixed or of reasonably constant variability across the stream and of relatively gradual longitudinal variability. Hence samples may be small in volume, and the allowable sampling interval is correspondingly long. This calls for intermittent operation, which involves use of a timer. In general, design has developed along the lines of making the timer the primary element of these apparatus, either making it the means of driving the cutter as well as timing it, or making the drive a simple mechanical or electrical system responding to the timer impulses.

Arc-path mechanisms have proved to be simplest in design for wet-pulp sampling also, hence they predominate. On the other hand, cutters with straight-line travel are more susceptible of sturdy construction and ready inspection; they tend to be more reliable and accurate; and as a result predominate in large mills.

General principles of sampler construction. In order to put the foregoing principles into effect in sampler design, it is apparent that the assembly must include (*a*) means to prepare the stream for sampling, (*b*) a proper cutter, (*c*) means to move the cutter into, across, and out of the stream in (*i*) proper direction, (*ii*) at suitable speed, (*iii*) at correct intervals, (*iv*) at a constant rate, (*v*) in correct position. Additionally (*d*) construction should be rugged, and (*e*) parts should be easily accessible, both for observation and repairs.

Streams are always sampled when falling freely under the influence of gravity. Since transverse segregation does not affect accuracy, if it is reasonably constant in character, the stream may be that delivered by a conveyor, chute, or launder, although some sample designers prefer to pass the stream through a short vertical chute or pipe before cutting, attempting thus to effect admixture and contraction.

Cutters are of different shapes according to the path that they travel in the stream. Those that follow rectilinear paths must have parallel cutting edges; those that travel on an arc must have the edges on radii of the arc. The spacing of the cutting edges must, of course, be sufficient to permit entry of the largest particle in the stream when presented with its longest dimension parallel to the plane of the edges; preferably spacing is several times this distance unless such spacing requires excessive speeds to minimise sample weight. The cutter box is designed of sufficient size to prevent overflow, and of such shape as will (*a*) prevent it from deflecting any of the stream outside the vertical planes of the cutter edges into the receiving opening, (*b*) insure complete discharge of sample, (*c*) lead the sample without spill to the sample container. Cutting edges should be straight, and so constructed that they will remain straight or can be replaced readily in case of deformation through shock or abrasion; they should be as sharp as is consistent with the service. Forms of cutters for different services are shown in subsequent figures.

Actuating means (DRIVE) constitutes the greatest variable in sampler design. Basic classification is possible on the shape of path in the stream, this being either an arc or a straight line. The cutter may move continuously or intermittently. Timers for intermittent mechanisms are actuated by waterflow, intermittent gear or cam mechanisms, or by electrical impulses. Position of the cutter path is determined by the constraint of the actuating mechanism, or by independent guides; in either case it should be such that the cutter edges do not approach nearer to a fixed surface, while in the stream, than 1 1/2 times the maximum dimension of the largest particle in the stream.

Examples selected from the multifarious designs follow. Selection was made on several bases: primarily accuracy, sturdy design, wide use, and simplicity. Sometimes, but by no means always, the four coincide.

Arc-path Samplers

The best-known of the dry-ore samplers are of this type. They are built in both revolving and in swinging or oscillating forms.

Vezin sampler (Fig. 20) is of the rotary-arc type. It consists of two hollow truncated cones, *a* and *b*, joined base-to-base, with one or more scoops *c* attached to the upper cone, all mounted on a vertical shaft. Ore fed through chute *d*, which may be vertical or inclined, normally passes into hopper *e* and is rejected through spout *f*. As the sampler revolves, chutes *c* cut through the stream and divert parts into the conical chamber and through spout *g* as sample. The inventor recommended an inclined chute delivering ore so that the horizontal component of velocity is the same as that of the cutting edges. This gives the effect of a piece falling vertically on these edges. Warwick (*loc. cit.*) states that the mode of delivery, whether vertical or inclined, has no effect on the accuracy of the sample.

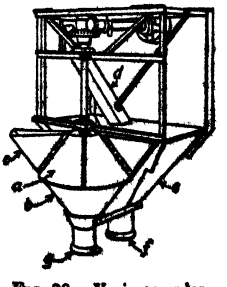

FIG. 20. Vezin sampler, single.

This sampler is made by a number of manufacturers; the machine should be investigated before purchase to see that the cutting edges are radial to the axis of rotation, and the sides of the scoops vertical; other-

wise the scoop takes more from one part of the stream than from another. In Fig. 21, item *A*, the edges are radially placed, the angular velocity is the same at all points, and all parts of the stream, therefore, flow into the sample for the same time. This gives a correct cut. The shape is shown in Fig. 22, items

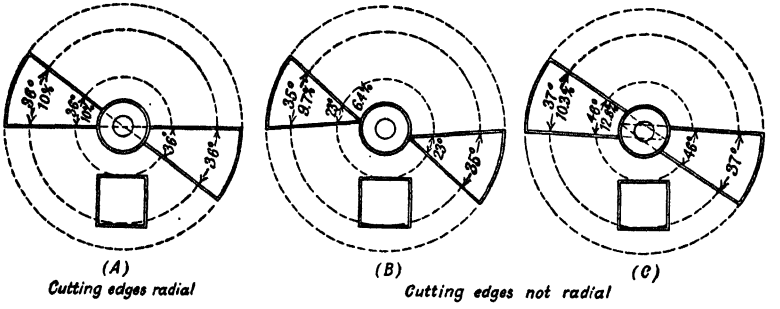

FIG. 21. Arrangements of cutting edges in Vezin-type samplers.

C and *D*. In Fig. 21, item *B*, the lines of the cutting edges intersect on the scoop side of the center, the arcs subtended increase from inside to outside of the described annulus, and a smaller proportion of the stream is cut from the inner edge than from the outer. The opposite case is illustrated in item *C*.

Proportion of stream length taken for sample is determined by the ratio of the number of degrees of arc subtended by the sample spouts to 360°. For a 10% cut a single sample spout should subtend 36° of arc, or with two spouts each should subtend 18°. The speed has no effect on the amount taken for the sample but affects only the FREQUENCY of the cuts; frequency can be varied also by changing the number of scoops. Usually one or two scoops are used, sometimes four. Two samplers are sometimes mounted on opposite sides of the same reject hopper in order to take duplicate samples. SPEED should not exceed 3 f.p.s. at a point on the scoop at the center of the feed stream, in order to prevent knocking pieces out of the stream, throwing them out of the scoops by centrifugal force, or hindering discharge. Width of scoop should be at least 4 times the diameter of the largest piece of material at the center of the stream and the opening into the cone should be at least 2.5 times this maximum diameter. Cutting edges should be made of hard, brittle steel to avoid distortion and wear; chips lost will probably be small and not materially affect operation; but bending changes the whole aperture.

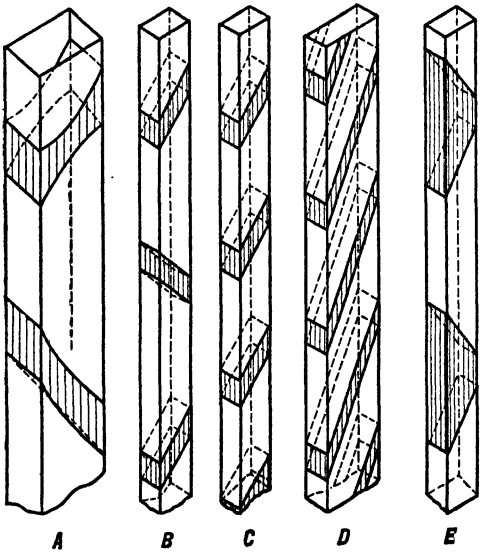

FIG. 22. Cuts taken by various samplers.

Fig. 23 shows a simple and efficient design for cutting edges used in sampling COBALT silver ores. The scoop is made of tempered steel, tapered for a short distance at the top to make a knife edge. Small wedge-shaped pieces of steel are placed between the scoop walls to hold the edges rigidly in place. For ordinary use such careful sharpening of edges is not necessary or common, but Cobalt ores were difficult to sample and it was necessary to take every precaution to attain accuracy.

ADVANTAGES of Vezin samplers are the ability to take an accurate sample; simplicity of construction; and easy accessibility for observation and repair. DISADVANTAGES are the head room required, danger of clogging, lack of ruggedness, possible improper construction of scoops, and delivery of feed in a manner to cause segregation and inaccurate sampling. The machine should be watched constantly to detect lodgment of foreign material on the cutting edges and to be sure that the scoops are not clogged. Hammers or mallets should be used only with the greatest care, if at all, to free clogged chutes on account of danger to cutting edges.

Sizes are shown in Table 21.

Table 21. Sizes and weights of Vezin samplers

No.	Max. size feed, in.	Wgt., lb. single	Wgt., lb. duplicate
1	1	500	850
2	2	850	1,300
3	4	900	1,600

Chas. Snyder sampler is similar to the Vezin, except that it has four sample scoops and the feed chute, instead of being square or rectangular, is annular, and extends over an arc of 90°. As a result there is a sample scoop under the feed stream at all times. Feed in the vertical feed chute is scattered by a number of short cross rods introduced in an attempt to minimize segregation.

The scattering of the stream tends to defeat the end sought in keeping a cutter in the stream at all times.

Cascade sampler (*12 #9 Fuel 313*) is a combination of the cone sampler (Fig. 13) and the Vezin, used for cutting samples down to predetermined and not necessarily equal fractions. It consists (Fig. 24) of a stationary conical hopper *A*, truncated at its apex to give an orifice *C*, which is fitted with a sliding shutter *D*. Orifice is about 5 times limiting diameter of feed. Attached to the lower end of the hopper is an outer cone *F*, which serves to confine material, and to support an inner cone *E* by means of four thin metal plates *G*, placed radially. The apex of *E* is located about 1 1/2 in. below the orifice. This assembly is suspended by cable or the like over a rotating bin *B* divided radially as desired (90°, 60°, and 30° in the figure). The tub floor slopes to a discharge hole *H* closed by a suitable stopper. The bin is rotated at 40 to 60 r.p.m.

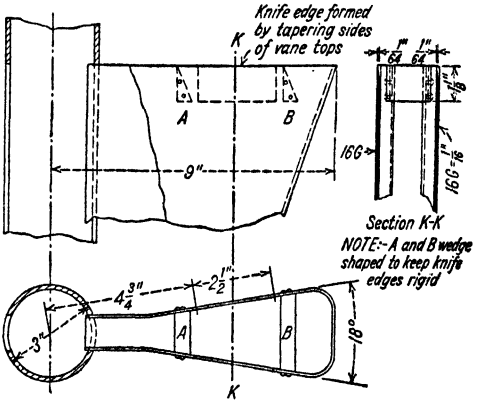

FIG. 23. Cutting edges on Vezin samplers at Cobalt.

In batch operation, the hopper is filled and the bin, with outlets closed, is brought to speed, whereupon the shutter is opened. Material can be added during operation if the bin is large enough. Reported agreement in ash analyses between various cuts on <1/8-in. coal is excellent, being equal to the limits set by assay procedure; performance with <3/8-in. coal was almost as good. On a weight basis, the combined 90° compartments, which should deliver a 50% cut, actually delivered 49.1%, with an average deviation for 4 runs of 0.05%; the 60° compartments gave a 33.5% cut with average deviation = ±0.1% as compared with the theoretical figure of 33.33%; and the 30° compartments yielded a 17.5% cut, average deviation = 0.13%, compared with the theoretical 16.67%.

Umpire sampler (Fig. 25) used for cutting down dry samples for assay, has two buckets revolved in opposite directions by means of bevel gears. Each bucket is divided into four compartments by plates at right angles, two opposite compartments being open at the bottom while the other two are closed.

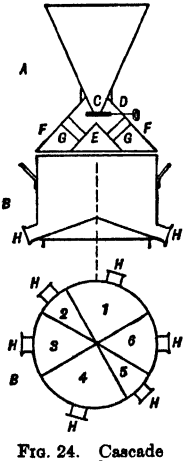

FIG. 24. Cascade sampler.

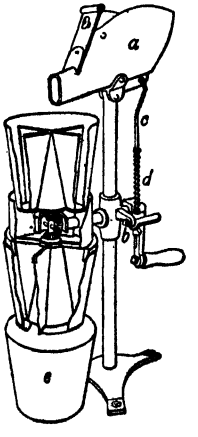

FIG. 25. Umpire sampler.

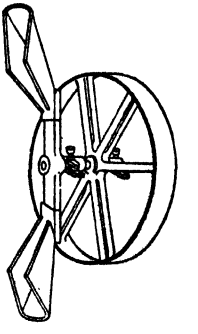

FIG. 26. Simplex sampler.

Material is fed from a scoop *a* that is shaken by a cam *b* striking a strap *c* attached to the scoop and to the coiled spring *d*. The sample passing through the second rotating bucket is caught in a bucket *e* and represents one-quarter of the material fed to the machine.

Simplex sampler (Fig. 26). The machine is simple and cheap, and on that account has had wide use. It is, however, notoriously inaccurate except for fine bone-dry ore; under other circumstances some material splashes out of the sample chutes while these are in the stream, and moist material

either rides the scoop to the top of its path and drops back into the stream or gradually fills the scoops more or less completely. The finer part of a long-range feed is always favored for the sample.

Rotary wet-pulp samplers are unusual.

The form shown in Fig. 27 was designed and used at BERTHA MINERAL CO. (*132 J 480*). It consists of a sample cutter comprising radial vertical walls *a* of 1/16-in. rolled manganese-steel plate, welded to

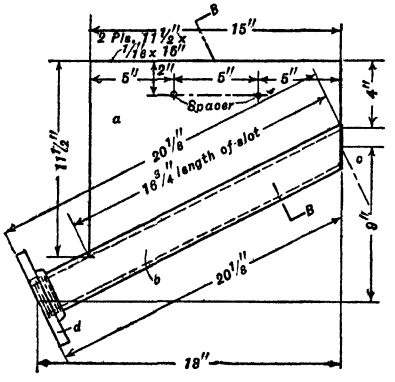

Cutter

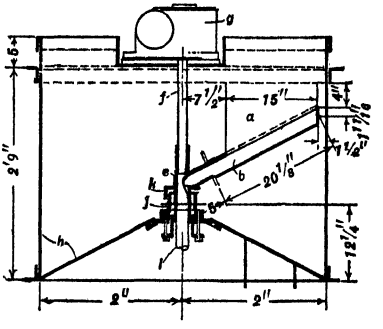

Sectional assembly

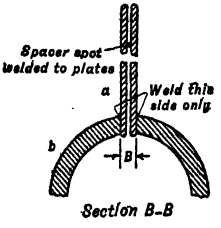

Section B–B

FIG. 27. Rotary wet-pulp sampler at BERTHA MINERAL CO.

cover plates at the ends, and to the supporting inclined 2-in. extra heavy pipe *b* at the bottom. A welded cover plate *c* closes the outer end of *b*. The other end of *b* is threaded into a 2-in. standard pipe flange *d*, which is bolted to a suitably inclined seat on casting *e*, keyed tightly to and supported by shaft *f*, extending downward from gear box *g*. The gear box with its 1/4-hp. driving motor is supported on angles on the top of cylindrical tank *h* within which the sampler rotates, and through which the pulp stream falls. Cutting edges are beveled at 60° to the vertical from the outside to a 1/64-in. inner edge. Width of slot at 15 in. from center of rotation is made 1/16-, 1/8-, or 15/16-in. according to the service. The cutter delivers to the supporting casting, into the bottom of which is screwed sample-delivery pipe *i*. Stuffing box *j* under splash shield *k* protects against leakage into the sample, and is itself largely protected by the upward sloping conical bottom of tank *h*, which insures nonsubmergence.

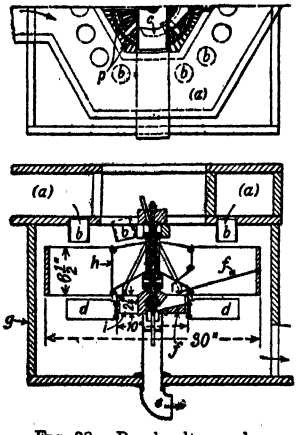

FIG. 28. Borcherdt sampler.

Speed of rotation determines the frequency of the cuts, but not the sample ratio; quantity of sample taken depends upon the ratio of average cutter width to average circumferential travel. For a 1/16-in. slot and an average radius of 15 in. the fraction taken as sample is about 1/1,500.

Borcherdt sampler (Fig. 28) is of rotary type, and uses the pulp stream for motive power. It consists (*101 J 524*) of two wheels *h* and *i* mounted on ball bearings on a vertical shaft. Each wheel is divided into a large number of equal pockets by means of thin pieces of sheet steel, the plane of each sheet passing through the axis of rotation. One pocket of each wheel is fitted with a false bottom *f* so arranged that any material entering the pocket is discharged toward the center of the wheel; the remaining pockets are open. The proportion of the stream cut as a sample depends on the number of pockets on the wheel. Pulp is delivered to the upper wheel from a covered box *a* through a number of

short pipe nipples *b* slightly inclined so that pulp passing from them causes the upper wheel to rotate. Pulp caught by the closed pocket of the large wheel is delivered to a distributor *c* which spreads it over about one-third the area of the smaller wheel. The latter is rotated by the action of the falling pulp on eight inclined paddles *d* fastened to the periphery. Pulp caught in the closed pocket of the small wheel is delivered to the center and discharges through pipe *e*, passing out of the bottom of box *g*, which encloses the apparatus. The main pulp stream falls through both wheels and discharges through a launder let into the side of box *g*. The wheels rotate in opposite directions at about 7 r.p.m. for the larger and 13 for the smaller. The sampler works without splash on tailing carrying 180 tons of solids and 1,440 tons of water per 24 hr.

Vertical-swing rotary sampler in homemade form as used at the Questa concentrator of the MOLYBDENUM CO. OF AMERICA to sample tailing is shown in Fig. 29. Pulley *A* is mounted loosely between collars on a length of 2-in. pipe *B*, one end of which passes through a bearing *C*, mounted on the open-topped junction box *E*, and continues through a 90° elbow, another length of pipe, and a second elbow to the cutter *D*. This comprises another 6-in. length of pipe, capped at the outer end and slotted longitudinally as indicated. As pulley *A* turns, stud *G* set in one of the spokes strikes a long setscrew *F* attached to one of the collars, causing it to turn. When the cutter passes its highest point of travel, it falls and passes through the pulp stream, gaining enough energy to carry it more than halfway up the other half of a complete revolution. Here a ratchet *G* and a spring arrangement prevent it from falling. A sampling ratio of 1 : 900 is reported (*IC 6651*).

Although the rate of travel of the cutter through the stream is not uniform, and the cutter takes more material from the edges than from the center, excellent results are reported when used to sample tailing.

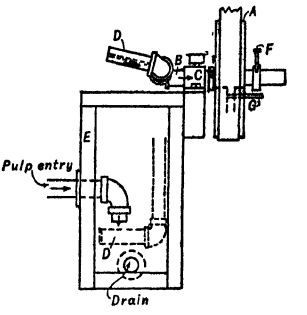

FIG. 29. Vertical rotary sampler.

Martin sampler was used to sample moist, sticky flotation concentrate at GARFIELD smelter. The machine was mounted on a traveling gantry. A 1 1/4-yd. clamshell bucket unloaded concentrate from 75-ton flat-bottom railroad cars and dumped through a grizzly into a 20-ton hopper. The bottom of the hopper, 9 ft. square, consisted of a belt conveyor which carried material through a 6-in. slot 9 ft. wide in one side and discharged onto a "chopper" consisting of eleven 15-in. revolving disks spaced 12 in. on a shaft with No. 12 spring-steel wires threaded through holes near the circumference parallel to the shaft. This cut the stream into strips which fell onto a 30-in. revolving hollow cylinder with a 16-in. section of the surface cut out along the entire length, making a 1/10 cut. A 12-in. conveyor inside the cylinder carried the sample to a smaller "chopper," thence to a second cylinder cutting out 1/15th and thence by another axial conveyer to a sample car. Rejects passed to a large conveyer which delivered to the bedding bins. (*114 P 17*).

Oscillating and swinging arc-path samplers constitute a considerable group in both dry- and wet-pulp sampling.

Brunton oscillating sampler (Fig. 30) consists of a hopper *a* which receives ore and discharges through vertical chute *b* to an oscillating deflector consisting of two reject-deflecting surfaces *m*, and a sample-deflecting surface *n* placed between and separated from the surfaces *m* by cutting edges. The machine is so arranged that sample and reject are discharged in opposite directions. The oscillator is made of stiff, strong sheet metal and is attached to shaft *p*, which imparts an oscillating motion in a vertical plane to the cutter, by means of a counterbalanced crank and connecting rod. A housing of sheet iron surrounds both chute and oscillator. The sampler is usually arranged to take a 20% cut, but by the use of elliptical gears on the driving mechanism a 5% cut can be obtained. The cut may also be varied by changing the size of the sample-deflecting spout.

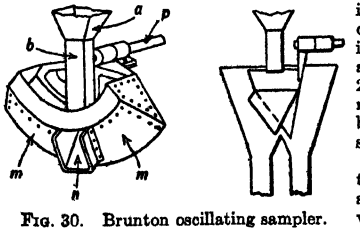

FIG. 30. Brunton oscillating sampler.

At each oscillation the sample spout passes completely through and out of the stream. The cutting edges are short and made of special steel to prevent warping and excessive wear. The side walls of the sample spout should be in planes that pass through the center of the oscillating shaft; otherwise the angular sampling distance will change as the cutting edges wear. The speed may be as great as 72 oscillations per min. Rapid motion aids materially in discharging, especially if the ore is wet or sticky, and tends to keep the cutting edges free from accumulations of foreign waste.

ADVANTAGES: The sampler requires but little headroom, is easily accessible for examination and repair, and is quickly cleaned. DISADVANTAGES: The machine takes more material from the sides of the stream than it does from the center, as shown in Fig. 22, item *A*. This error decreases with increase in distance of cutter edges from center line of shaft, and is normally small.

Snyder sampler (Fig. 31) consists of a pan-shaped plate *a* with one or more sample spouts *b*, supported on and rotated by a horizontal pulley-driven shaft *c*. The plate and spouts are usually a single strong casting but may be fabricated of good sheet steel. Feed enters through chute *d*, the reject is deflected by the conical plate, and the sample

passes through the spout into the sample hopper. To prevent change in sample weight as the cutting edges wear, the side walls of the sample spout should lie in planes that pass through the axis of rotation. Amount taken for sample is varied by changing the size or number of sample openings; frequency of cuts is varied by changing the speed of rotation or number of openings. The shape of the cut is shown in Fig. 22, item *B*. Three sizes are made: 66-, 44-, and 28-in. diameter, for 4-, 2 1/2-, and 1-in. maximum particles, respectively.

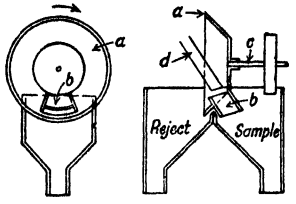

FIG. 31. Snyder sampler.

ADVANTAGES. The machine is simple in construction, easily cleaned and repaired, and can be readily observed during operation. Foreign waste that catches on the cutting edges is readily freed as the disk revolves. Little headroom is necessary. One disadvantage is that with wet or sticky ores, fine material adheres to the reject-deflecting surface and as the disk revolves falls through the sample opening, thus salting the sample; another, that more material is taken from the sides of the stream than from the center.

Rocking whole-stream cutter (Fig. 32), water-timed and solenoid-actuated, was used at YELLOW ASTER to sample mill feed and tailing. Operation is as follows: Constant-head water flowing continuously from a 1/8-in. valve *B* is caught by bucket *A*, hinged as indicated, and held upright by spring *C*. When the water reaches a level at which its torque overcomes the tension of *C*, the bucket tilts suddenly (increasing torque), closing the 110-v. circuit in the mercoid tube *D*, which is mounted on the outside of the bucket. Current then flows to the holding coil *E* of a 440-v. magnetic switch *F*, which closes the 440-v. circuit through solenoid *G*. The solenoid core, attached to the crank on the axis of sample cutter *H*, pulls the cutter into position *I* where it intercepts the whole stream in the chute until the emptied tilting bucket returns to upright position under the pull of *C*, and breaks the solenoid circuit, whereupon spring *J* pulls the cutter out of the stream.

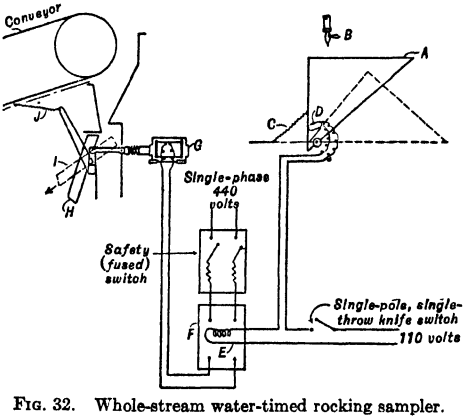

FIG. 32. Whole-stream water-timed rocking sampler.

Frequency of cut depends upon the time required to fill the tilting bucket to tilting level. Shape of cut is shown in Fig. 22, item *E*. At YELLOW ASTER a cut was made every 16 min.

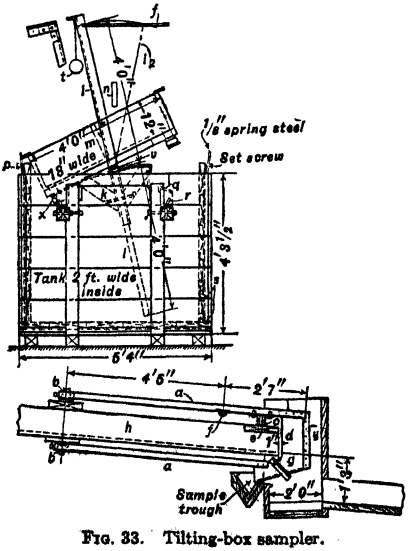

FIG. 33. Tilting-box sampler.

Tilting-box sampler is one in which the tilting box is both the timer and the mechanical means for moving the cutter. Cutter travel is normally curvilinear, although rectilinear motion is readily obtained by a simple link motion (see Fig. 36). In the form shown in Fig. 33 the scoop *d* is made of a piece of sheet steel cut and bent to proper slope for discharge of the sample and riveted against a 3/4-in. wedge-shaped block to close the back; angles *g* prevent drip from sides into the sample. It is mounted on a stiff frame *a*, made of two pairs of 1 1/2 × 1 1/2-in. angles, back-to-back, carried on pivot bolts *b*, roller *c*, and plate *e*. The carriage is dragged back and forth across the stream by rod *f* attached to upright *i* of the tilting box. The upright is pivoted on a shaft *v*; it carries below the pivot a bumping frame *k* and, at the lower end, paddle *l*. Teeter box *m* is also pivoted independently on shaft *v*. This box is divided by a central transverse partition and is provided with two check valves.

Operation is as follows: With the box empty and in the position shown, constant-head water enters the upper compartment through pipe *n*. When this compartment is full enough to cause release of the spring catch *p* the box tilts freely until it strikes the upper end of bumping frame *k*, which then moves downward and swings upright *i* across into position i_2, and thus, through rod *f*, drags cutter *d* across the stream. At the end of the swing the tilting box strikes bumper *q* and pin *r* opens check valve *x*, allowing the water to run from the tilting box into the tank below. The other end of box *m* now fills, and the cycle is repeated. The level of water in the lower tank is regulated by plugs *s* at such a height that the paddle takes up the shock of the striking teeter box and causes uniform motion of the cutter. The sensitivity of the mechanism is increased by the suspended weight *t*, which raises the center of gravity of the tilting frame; this weight also aids in holding upright *i* in off position against the weight of the paddles, and, by reason of its inertia during the swing, prevents stoppage at dead center. Timing is regulated by a valve on water line *n* which should be on an open-pressure tank with float valve or constant overflow.

In other forms the cutter swings in an arc in a vertical plane on an arm depending from the tilting box or the tilting-box shaft. Motion is then akin to that of the cutter in Fig. 29.

Piston-actuated vertical-swing sampler used at ALASKA GOLD MINING CO. is shown in Fig. 34. The cutter consists of steel sheets *a* mounted on a slot in inclined pipe *b* supported by stirrups *c* and swung through a stream issuing from the bottom of box *d* by movement of the water-actuated piston *e*, controlled by a Scobey timer (Fig. 41). Reject discharges from the side of box *f*, and sample passes into *g* and through pipe *h* into sample receptacles *k*.

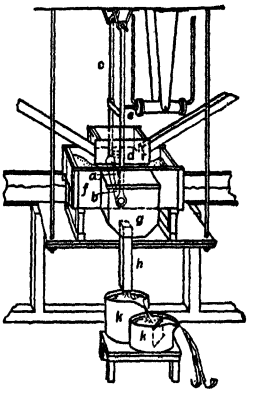

FIG. 34. Piston-actuated sampler, ALASKA GOLD MINING CO.

Straight-Path Samplers

Straight-line cutter travel is theoretically best, since it is readily arranged to give equal time in each portion of the stream, which no curved-path cutter can do without an elaborate differential movement too complicated and expensive to be practical. Drives and timers are of wide variety.

Chain-bucket sampler (Fig. 35) is representative of a type of straight-line sampler widely used for dry ore. In the form pictured (VAN MATER) it consists of a sprocket-chain sampling conveyor set under and carrying a sampling bucket through the discharge of the main conveyor. The sampling conveyor is driven by pulley and belt from the head end of the main conveyor. Any number of sampling buckets may be used according to the frequency and size of sample desired. The buckets must be at least as wide as the stream delivered by the main conveyor. The sample cut by the buckets is dumped into a sample hopper *a* as the bucket passes over the head sprockets. A wooden wearing block is fastened to the bottom of the buckets to take wear when the bucket passes through the stream of ore on the return trip. The proportion taken for a sample is the percentage of the total length of sprocket chain that is represented by the distance between the cutting edges of a bucket, multiplied by number of buckets. The bucket must be deep enough to prevent material from bounding out (*88 J 1232*).

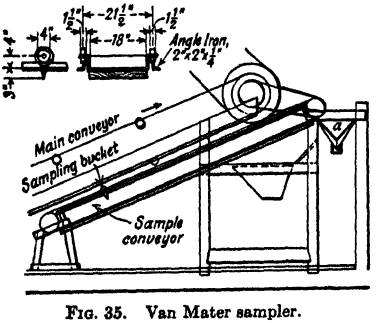

FIG. 35. Van Mater sampler.

In the more usual form of this sampler the buckets are of tilting type and the travel is at right angles to the stream (in the case of a conveyor discharge, in a horizontal line at right angles to the vertical plane of the conveyor axis), with the return run usually above the sampling run.

In the variant used at MIDVALE (*IC 6492*) a double cut is taken by the same conveyor system. The sampler consists of a double-chain tilting-bucket elevator-conveyor (Peck type, Sec. 18, Fig. 66), with 2 @ 3×9-in. buckets, arranged to cut the discharge of a belt conveyor, and dump the sample into a small hopper discharged by a horizontal-disk feeder, the stream from which is again cut by the sample buckets on the lower run. The final sample then discharges into a bin. Ratio per cut is 1 : 50, hence final sample ratio is 1 : 2,500.

Tilting-box straight-line sampler consists, in the form pictured in Fig. 36, of a wheeled carriage *a*, running on a track on the supporting frame, and carrying three dependent

scoops *b* which are actuated by arm *c* from the tilting frame *d* mounted on pivot shaft *e*. Constant-head water from pipe *f* alternately fills kegs g_1 and g_2, which are emptied in down position when spring-plugs *h* strike their respective bumping blocks. Carriage travel is not uniform, owing to acceleration of the tilting frame and variation in the effective length of arm *c* during the stroke.

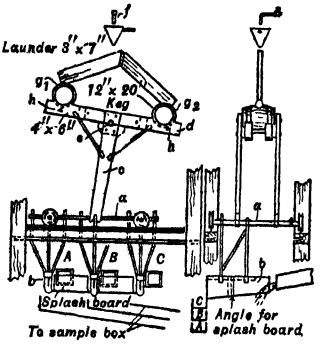

FIG. 36. Tilting-box sampler with three scoops.

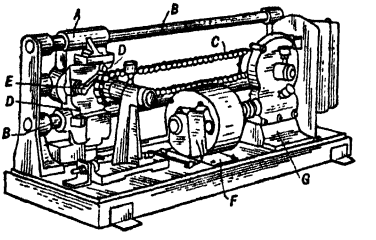

FIG. 37. Geco sample-cutter drive.

Geco sampler (Fig. 37) is typical of a common form of drive for straight-line cutters, applicable both to dry- and wet-pulp sampling. It consists of a suitable sample cutter mounted on carrier *A* and driven back and forth horizontally on rods *B* by an extending roller pin on roller chain *C*, which engages lugs *D* on *A* through linkage *E*. Chain is driven by motor *F* through reducer *G*. When the limits of carriage travel are reached, power is cut off by a limit switch, and is restored, after some desired interval, by a time switch operated by a Telechron motor (Fig. 42). Standard sampling intervals are 5, 7.5, 10, 15, and 30 min. Cutter travel, determined by the distance between sprocket centers, is 16 to 20 in. in the standard machine. Greater distances are available in larger sizes.

Geary-Jennings sampler has the cutter carriage actuated by a heavy motor-driven screw, the general arrangement being otherwise similar to Fig. 37. Drive is from a reversible, synchronous motor. Limit and time switches control length of stroke and cutting interval. Stock samplers travel at a constant rate of 5.7 in. per sec., with stroke lengths of 15 to 60 in. Sampling interval is adjustable.

ADVANTAGES. These samplers take a cut of the stream as represented graphically by Fig. 22, item *B*. This is correct sampling, especially since the frequency of cuts may be varied by the operator to suit the individual sampling problem. Any disadvantages which exist accrue from the method employed to drive the cutter. This should be positive and capable of producing uniform motion across the stream. The delicate electrical equipment is, perhaps, a disadvantage, since it requires expert attention. Ordinarily, maintenance consists of resurfacing contact points or the like.

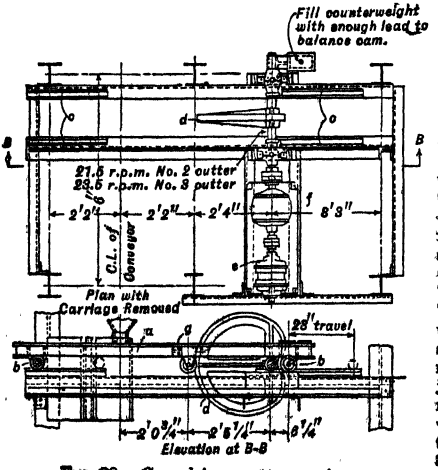

FIG. 38. Cam-driven cutter carriage.

Cam-driven cutter carriage (Fig. 38) was developed at UTAH ORE SAMPLING CO. (*129 J 223*). Carriage *a*, supported on wheels *b*, is mounted on two short parallel tracks at the ends of the frame. It is actuated by cam *d*, driven at constant speed by motor *e* through reducer *f*. Cutters have sharpened lips of manganese steel. The stream is cut alternately from each side. The cam must be designed properly to produce uniform motion of the cutters through the stream, and it must fit snugly between the idling rollers on the carriage to eliminate backlash and jerking. Take-up *g* on the front idler permits necessary adjustment. Spacing of the cutter walls determines the percentage of material taken for sample, a 6-in. width is used to sample 3/8-in. material and a 3-in. width for 3/16-in. and 10-m. material. Frequency of cut is determined by the r.p.m. of the cam. Travel is 23 in.

At UTAH COPPER CO. straight-line cutter carriages on tracks are driven by individual motor-reducer units actuated from a central control timer. The reducer drive shaft carries a pinion which drives a guided rack, attached by a rod to the cutter carriage. (See Fig. 43, item *B*.)

Arrangement of straight-line cutters. Several arrangements are shown in Fig. 39. *A* and *B* are typical for fine wet pulps, the sample being delivered by pipe through a slot in the side of the junction box. *C* and *D* show arrangements for cutting streams of coarser material delivered by conveyor and vertical chute respectively. The carrier arm

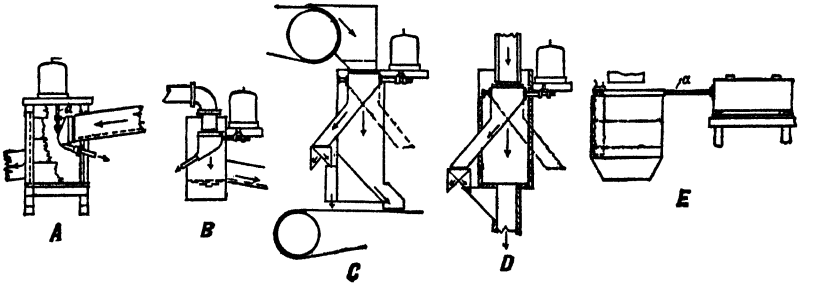

FIG. 39. Arrangements of straight-line sample cutters (*after General Engineering Co.*).

a may, if desired, be extended in the line of travel, as shown in *E;* this is a better arrangement for heavy cutters, which may then be mounted on a yoke-drawn wheel carriage as depicted.

Manufacturers of samplers. Allis-Chalmers Mfg. Co., Braun Corp., Denver Equipment Co., Denver Fire Clay Co., Galigher Co., General Engineering Co., Lundin and May Fdry. Co., Inc., Mine and Smelter Supply Co., Morse Bros. Machy. Co., Southwestern Engineering Co., Stephens-Adamson Mfg. Co., Traylor Engineering and Mfg. Co.

Timers

Timing traces back in all cases to a controlled rate of flow of a fluid, with some form of mechanical reaction to mark the end of the desired interval. Classification of timers is on the basis of the means of marking the interval and of transmitting the impulses then occurring. (*a*) TILTING-BOX (Figs. 33, 36) is the simplest and most direct form. (*b*) MECHANICAL TIMER depends upon interruptions in the impulse of a revolving shaft held to a constant speed by a governor on the driving engine. (*c*) ELECTRICAL TIMER is a variant of (*b*) in which the immediate constant-speed shaft is that of a synchronous motor.

Tilting-box external timer is shown in one form in Fig. 40, in which the box in swinging actuates a two-way pressure-water valve that admits water alternately to the two sides of a piston in a long cylinder, the piston rod actuating the cutter carriage.

Tilting boxes are subject to variations in water supply, as respects both flow rate and density. If, however, fresh water is used, drawn from a tank in which constant head is maintained by continuous overflow, with an alarm for failure; and the flow to the tilting box is of reasonable volume so that the flow-controlling means is not of too small aperture, the device is sufficiently accurate for all normal sampling operations in ore-dressing plants.

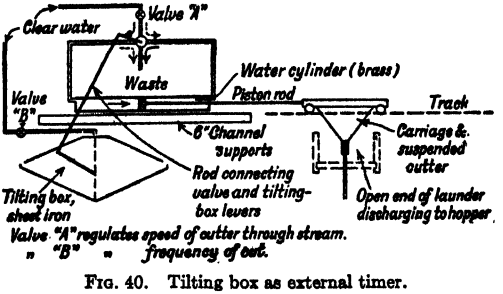

FIG. 40. Tilting box as external timer.

Scobey timer (Fig. 41) is of the interrupted-gear type. It is used to operate samplers directly or to control the power for the actuating mechanism. It is driven by belt from a convenient source of power at about 20 r.p.m. Motion is transmitted through bevel gears *a* to a chain of intermittent gears which move a sliding frame *b* from side to side. A lug *c* on the sliding frame causes arm *d*, pivoted at *e*, to swing back and forth. The cutter *f* is attached directly to the swinging arm, or the arm is connected to a switch or valve controlling the power operating the samplers. The position of the pivot of the swinging arm may be varied by turning handwheel *g*, thus changing the length of this arm of the lever and consequently the speed at which the cutter moves. The arc which the arm describes may thus be varied from 10 to 22 in. in length. By using different

combinations of intermittent gears, the intervals at which a stroke is made can be varied from 1 min. 20 sec. to 5 min. 20 sec., when the driving pulley is making 20 r.p.m. With a 2-in. cutter attached to the swinging arm and by varying adjustments as above, samples from 1/1,000th to 1/11,000th part can be obtained. When arranged as shown and taking the discharge from a launder, only 10-in. fall is required.

Various other mechanical timers are on the market.

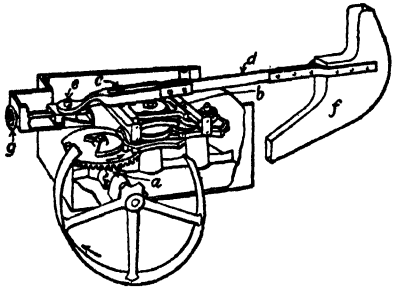

FIG. 41. Scobey timer.

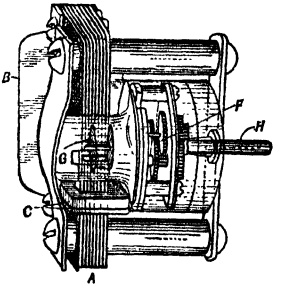

FIG. 42. Telechron motor.

Synchronous-motor timers are of the self-starting clock type which operate in synchronism with an a.-c. frequency. When operated at the rated load they attain synchronous speed, starting from rest, in a fraction of a second. Speed is independent of drops in line voltage providing these do not exceed 20%; it is also independent of temperature changes ranging from 0° to 100° F., but for temperatures outside this range a special lubricant must be used.

Telechron motor is shown in Fig. 42. Bipolar field *A* is excited by a coil *B* drawing power from a single-phase a.-c. circuit. The shaft *H* of the motor carries at one end a set of rotor rings *G*, made of thin, hardened, magnetic steel, which fit in slots cut in the pole pieces. They are caused to rotate by producing in the magnetic field a tendency toward rotation. This is done by placing copper shading coils *C* upon one of the arms of the magnet, which cause the flux in this arm to lag behind the flux in the unshaded arm. This field acting on the remanent magnetic poles of the rotor rings causes the shaft to rotate. A gear train *F* is used to reduce the speed of the output shaft of the unit.

Both light-duty motors and motors for light power and comparatively heavy duty uses are available. Accuracy is to a fraction of a second, if the line generator speed is constant.

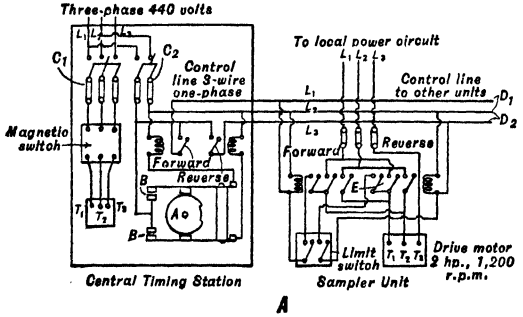

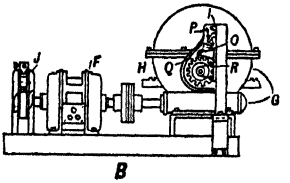

FIG. 43. Timing system at UTAH COPPER CO.

Central timing systems and controller units are used to eliminate duplication of equipment, provide for remote control by one operator, and prevent access of unauthorized individuals to the sampling system. Housing of individual samplers and sample containers is common practice.

AT UTAH COPPER CO. a central timing station (Fig. 43) is used to control a system of automatic electric pulp samplers (*150 J 556*). The timer disk *A* is driven at 20 m.p.r. by a 1/8-hp. induction motor through an enclosed gear train of high reduction, giving a 10-min. time interval between the upper and lower contacts *B*. Two single-pole magnetic switches C_1 and C_2 are thus energized alternately, and alternately energize the sides of the 3-wire control line D_1 and D_2. These currents control the individual reversing switches *E* of each sampler unit only; they do not power the driving mechanisms of the sampler units. As the reversing switch of the sampler unit closes, its own holding circuit functions to make the switch independent of the control current, so that only momentary contact at the timer is needed.

The drive unit of each sample cutter consists of a 2-hp. induction motor *F*, enclosed worm reduction gear *G*, rack *H* attached to the cutter car, a limit switch *I*, and a magnetic brake *J*. The limit switch is coupled directly to the worm-wheel shaft. Cam *O*, which actuates the levered carbon contact *P*, is rotated at its proper speed by means of a pinion *Q* on the cam shaft and a gear *R* of proper ratio. When the cutter completes the stroke, limit switch *I* opens the circuit of the reversing magnetic switch, the motor stops, and the magnetic brake prevents further movement of the cutter. At the end of 10 min. the cycle is repeated but in the opposite direction. The length of the stroke of the cutter is controlled by the limit switch, so that streams of different width may be sampled. The reduction ratio of each sampler unit controls the sampling time. The central timing station controls only the frequency of the cuts.

At the Bird Dog Mill (*131 J 351*) a central controller unit with compressed-air transmission is used to control the automatic samplers and the flow of ore in the primary crushing section. The mill treats ore from three different mining tracts, hence tonnage and head assay of each ore must be determined accurately. Tonnage of incoming ore is determined by a track scale. Ore from each tract is stored in a separate bin. Each ore is crushed separately by a jaw crusher; a 10% sample of this product is delivered to the corresponding separate sample bin. These samples are subsequently crushed further and sampled in steps (see Fig. 65). The discharge gate of each coarse-ore bin is actuated by an air-driven piston. The actuating cylinder of the samplers (Fig. 44, item *A*) consists of two opposing pistons *a* attached to a common spindle *b* carrying a gear rack which meshes with a gear segment *c* onto a pinion shaft *d* to which the cutter is fastened. Periodic diversion of compressed air from one cylinder to the other swings the cutter across the stream. The interval between swings is controlled by a master poppet valve driven by chain and sprocket from the main line shaft of the mill (see item *B*).

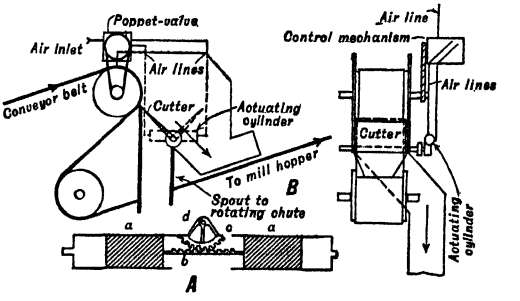

Fig. 44. Arrangement of head sampler at Bird Dog mill.

The rotating feed chute of the sample bins is turned to the proper bin by means of a pinion keyed to its shaft and engaged by a rack. Movement can be imparted to the rack by any one of four actuating cylinders, each of which moves the rack through a different distance.

The central controller unit consists of four air valves, each of which has a two-way discharge, one connected to the bottom side of the actuating cylinder of one of the coarse-ore bins and the other to one of the four cylinders controlling the rotating chute so that the chute is moved into the feed position of the corresponding sample bin. Simultaneously with this performance air enters the top of the actuating cylinders of the other bins and closes the gates. A locking device actuated by an auxiliary air cylinder inside the controller panel locks the controller mechanism so that none of the other hopper gates can be opened, and sets a time lock that introduces an interval between the closing of one gate and the opening of another, thus allowing time for discharge of material on conveyors. The gates and rotating chute are equipped with commutators so situated that a signal light goes on at the controller panel when the corresponding unit is in operative condition. The controller air valves are operated by levers equipped with a gravity catch in the operating position. The locking mechanism noted above prevents movement of all levers save the one in the operating position.

At Empire Zinc Co., Gilman, Colo. (*132 J 480*), a combined mechanical and electrical limit switch and timer (Fig. 45) operates the samplers. A common timer shaft *A* carries a set of cams, one for

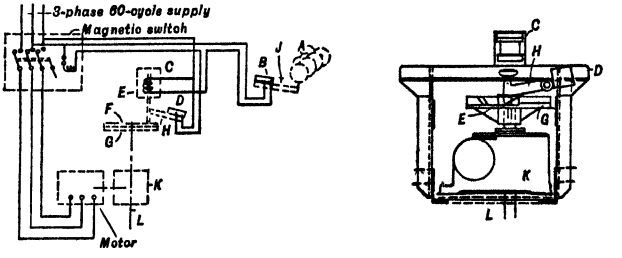

Fig. 45. Timing mechanism at Empire Zinc Co.

each sampler. The cams tilt rocker arms *J*, which close individual mercury switches *B* controlling current to solenoid *C*. The energized solenoid lifts a roller *E* out of a slot *F* in a circular track on table *G* and simultaneously tilts the rocker arm *H*, which closes mercury switch *D*; this starts a 1/4-hp. motor which drives the sampler through speed reducer *K* and sampler shaft *L*. As soon as movement of the table begins, switch *B* is opened by rotation of cam *A*. The solenoid is thus de-energised and the idler drops onto the circular track. Movement of the table continues until the slot in the track comes

under roller *E*, when the roller drops into the slot and allows the solenoid plunger to drop and open switch *D*. Thus a complete revolution of the cutter is obtained. A rotary sampler traveling at 8 r.p.m. on shaft *L* and taking one cut every 2 min. will give a sampling ratio of 1 : 24, 130 for a 1/16-in. cutter width and 30-in. average diameter of cutter circle.

Checking Automatic Samplers

Recording devices. It is essential to accurate sampling to install a recording device on automatic samplers in order to have a check on performance. The simplest recorder is a revolution counter, set to count each cut; the counter is read at beginning and end of the sample period giving the number of cuts and therefrom the average sampling interval. This device does no more, however, than point a lack of cuts in case a sampler is stuck for a part of the sampling period; it tells nothing as to when the hang-up occurred, nor as to whether it occurred in mid-stream. Too few cuts indicates unreliability of the sample; too many may point to unreliability of the counter.

Graphical recorders of the Bristol or similar type, arranged to indicate the length of travel of the sample scoop at each cut and the time of the cut, give all information necessary as to performance, in the shape of a chart presenting graphically the relation between time and scoop travel. If the chart indicates that the scoop has stuck in mid-stream, the sample should, of course, be discarded.

Calibration of samplers is illustrated by practice at EMPIRE ZINC CO. (*132 J 480*). A 50-gal. barrel equipped with valve and hose outlet is filled with saturated sodium chloride solution, which is run at a uniform rate into the stream ahead of the sampler for 5 to 20 min., time being determined with a stop watch. During this time sampler cuts are collected separately. These samples and blank solution samples are assayed for Cl^-. From the assays, volume of salt solution added, and pulp density of the samples, the sampler ratio is computed.

4. TONNAGE AND MOISTURE DETERMINATION

Determinations of weight of ore delivered to or passing through different sections of a mill are necessary in order to keep close check on operations. Where ore is being accepted at a mill from a seller, the weight must be determined as accurately as possible; in plants that are milling company ore, the weight need be determined only approximately, as a rough check on working. Many schemes are used for tonnage determination, some are accurate and some mere approximations that depend on averages over long periods of time for dependable results.

Track scales are used for carload lots. They ordinarily require the services of an operator who balances the load on the scale beam and notes the weight on a suitable form. This method gives correct results within a small error (0.5%) but has the DISADVANTAGE of relying on the care and accuracy with which the operator balances the load and notes results. With recording scales the operator merely balances the load, then turns a screw which automatically punches a card and records the weight. Some track scales weigh a train of ore automatically as it passes slowly over the platform. This does away with the personal factor entirely except for occasional standardization. The car must stand free and completely on the scale; snow and ice should be removed before weighing.

Platform scales are used like track scales when wagons or trucks deliver the ore. The tare must be accurately determined. Unless the scales are in perfect adjustment, the load should be centered as nearly as possible at both loaded and empty weighings, or should stand at the same place for both weighings. Naturally, helpers or guests of the driver who weigh in on the full load should accompany the empty wagon over the scales. The wagon should be at rest when weighed and, in case of animal-drawn vehicles, traces should hang loose.

Automatic dump scales consist of a hopper which receives ore until full, when the weight is recorded and the material run out automatically. This is accurate. Considerable space is required, however, and operation is intermittent, making it necessary to use two units where a continuous stream of material is wanted, so that one will be discharging while the other is filling. Care should be taken to insure that all material runs out before new material is run in. (See also Sec. 3 A, Art. 6.)

Conveying weighers are attached to conveyors and automatically record the weight of material being carried. They occupy but little space and need no attendance except for occasional standardizing and adjustment. They are accurate to within 0.5% when kept in proper adjustment. Several different types may be obtained. (See also Sec. 18, Art. 23.)

Blake-Denison weigher (Fig. 46) suspends a short section of conveyor from the short arm of steelyard *a*, which is balanced to the weight of the unloaded conveyor. The load on the conveyor is balanced by a plunger *b* suspended in a mercury dashpot *c*. Shaft *d*, driven through bevel gears from a pulley revolved by the conveyor, is fitted with cams so that every time the conveyor travels through the suspended distance these cams operate a device *e*, which grips the steelyard, and a measuring quadrant *f* that rotates the ratchet registering wheel *g* a distance depending on the position of the steelyard. This amount is recorded on indicator *h*, calibrated for the units desired. The machine needs no attendance except occasional inspection and calibration with known weights.

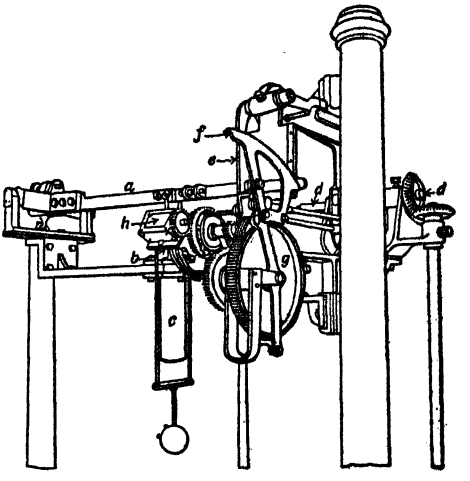

FIG. 46. Weighing and recording mechanism of Blake-Denison automatic weigher.

Checking operation of the weigher is usually done by feeding known weights of ore to the conveyor at a regular rate for a given period of time. At one plant (*100 J 520*), if the automatic weigher checks within 50 lb. in 8,000 lb. in comparison with hand-weighed feed, it is considered accurate enough; if a larger discrepancy is recorded, the weigher is adjusted. To insure proper operation, checking should be done at frequent and regular intervals.

Merrick Weightometer (Fig. 47) is so arranged that, instead of weighing the load on the conveyor by a succession of weights of short sections, the weight is taken continuously by means of a specially designed integrator. A portion of the conveyor is suspended by means of rods *a* from weighing levers *l* that operate beam *b*. The weight of the load at any instant is automatically counterbalanced by an iron float *c* attached to the beam. This float is partly immersed in a bath of mercury and thus as it rises or falls its gain or loss in buoyancy compensates for variations in load. The extreme end of the beam is connected by rod *d* to a totalizing mechanical integrator. The integrator (Fig. 48) consists of an aluminum disk *X* which has rollers *Y* around the periphery, the axes tangential to the edge of the disk and free to revolve. The disk is attached to shaft *s* which revolves in bearings on frame *Z*. The frame is mounted on bearings at both ends, which permits it to rotate on an axis that lies in the plane of the disk and passes through the center thereof. A link at one end of the disk frame is attached to rod *h* (*d*, Fig. 47) so that any movement of the beam causes the frame to tilt through an angle whose sine is proportional to the vertical movement of the float which, in turn, is proportional to the load on the suspended portion of the conveyor. Four pulleys (*U*, *U*, *Q*, *Q*) drive an endless belt *W*, which touches rollers *Y* at two points diametrically opposite on the axis of the frame *Z*. Contact between the disk rollers and the belt is maintained by pressure rollers behind the belt. The take-up pulley *T* is weighted and insures an even tension of the belt and takes care of any stretch.

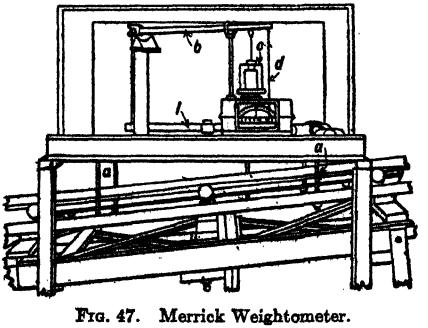

FIG. 47. Merrick Weightometer.

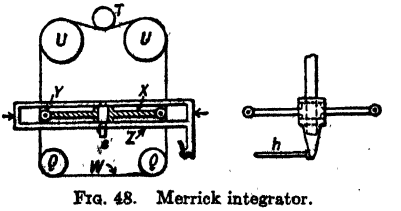

FIG. 48. Merrick integrator.

The two pulleys *U* are geared together and driven by means of gears from a bend pulley under the return conveyor belt, or from a sprocket, if link belt is used. When the belt is running unloaded, the machine is adjusted by means of an adjusting weight on a screw attached to the beam so that the disk remains vertical. In this position motion of *W* causes rotation of rollers *Y* but no rotation of the disk. When a load comes on the conveyor, motion of the beam causes the disk frame to tilt, the axes of rollers *Y* become inclined to belt *W*, and the belt pushes the rollers sidewise, causing the disk to rotate at a speed proportional to its inclination, *i.e.*, to the load on the conveyor. Revolution of the disk is recorded on a counter calibrated to read weight in the units for which the machine is designed. Thus the two factors, speed of belt and weight carried per unit of length, are accounted for.

This device can be used for weighing material transported on belt and bucket conveyors, cable railways and overhead transporters. A special attachment can be procured that counterbalances a varying empty weight of conveyor, should the material handled adhere to the belt on the return trip.

Toledo Chronofio is similar in principle to the Merrick; it determines belt loading continuously and utilizes an integrator to combine this determination with a belt-speed determination to give total weight. By balancing the return belt against the loaded belt, compensation may be made for material clinging to the belt and the integrator then gives net weight.

Electric weigher operates on the principle that the amount of current flowing through an electric circuit is proportional to the product of the voltage and conductivity of the circuit. Voltage proportional to the speed of the conveyor is produced by driving a constant-field dynamo by gears or a chain and sprocket attached to the driving shaft of the conveyor. Conductivity is varied with change of load by a rheostat operated by a plunger in a mercury dashpot. An ampere-hour meter in circuit is graduated to read in units of weight. A section of the conveyor is suspended in a manner similar to that employed in the Merrick Weightometer. A counterweight on the scale beam balances the empty weight of the conveyor while the weight on the beam due to the load carried is counterbalanced by motion of the plunger in the dashpot. To provide for varying weight of the empty belt, a corresponding length of the unloaded part of the conveyor is suspended so that it operates on the opposite side of the scale beam from the loaded portion. The machine is calibrated by moving riders astride two wires of a loop of the rheostat when standard weights are suspended from the scale and the dynamo is run at a known speed. Instruments may be attached to the system to record the rate of handling, time of starting and stopping, and continuity of operation; these instruments may be placed at any desired distance from the weigher. By connection of the scale with a device controlling the feeder, delivery of material at a certain rate or delivery of a certain predetermined amount may be effected.

Approximate methods of weighing are used when great accuracy is unnecessary or investment for a scale is not warranted. Carloads or trainloads are counted and the weight calculated from the volume of the cars and the weight of a unit volume of broken ore. In some cases carloads or trainloads are weighed occasionally and this weight used as a basis for calculating total tonnage from the number of cars or trainloads counted. Bin measurements of volume are frequently used as a rough check on other methods, or in company mills for inventory at the end of statement periods. Tonnage may be estimated by counting the number of strokes or revolutions of feeding devices, the weight of ore fed at each stroke or revolution being determined experimentally.

At the PORTLAND mill (*63 A 514*) the weight of ore passing was determined as follows: Once each day one Chilean mill was stopped and the feed discharged into a box for 20 strokes of the feeder plunger. This sample was weighed and the average of the five latest weights, applied as factor to the number of strokes of the feeder plunger as indicated by a counter, gave the tonnage per 24 hr. A similar method was used at the ROSEBERY concentrator. (*114 J 677.*) Ore at 1-in. size was sampled every 15 min. by catching the full discharge of the feeder for a period of 30 sec.; alternate-interval samples were weighed.

Wet-pulp tonnage is ordinarily computed from volume measurements and moisture determinations. The usual problem is that of finely ground material suspended in water and flowing in pipes or launders. The whole stream is deflected into a suitable container during a period of time measured by a stop watch. Volume is determined by graduations on the container or by measurement. The proportion of solids is determined from a small dip sample taken while the container is filling. If the stream is small, the whole amount diverted may be used to determine the amount of solids in the pulp. Percentage of solids may be determined either (*a*) by weighing, dewatering, drying, and weighing the dry solids; or (*b*) by calculation from the specific gravity of wet pulp and a value for the specific gravity of the dry material. The first method is the more accurate but takes longer; the specific gravity of the ore varies from time to time with corresponding effect on computation. Sometimes a cutter of known width is used to catch a time sample and the weight is multiplied by the ratio between width of stream and width of cutter to determine the amount carried by the whole stream. This method is not so accurate as the first because the stream varies in depth and density across its width. Results by this method will be most satisfactory when the material is very finely ground. Tonnage of ore in an agitating tank whose volume is known may be calculated from a dipper sample; the accuracy depends on the degree of pulp uniformity caused by the agitation. The volume of pulp passing through pipes is sometimes measured by solution meters and tonnage calculated from small specific-gravity samples.

Orifice control of flowing pulp by the periodic opening and closing of a collapsible rubber tubing which terminates an oversize orifice is recently reported by U.S.B.M. (*RI 3750*). This device, known as the PERIODIC FINGER, has been used to control pulp flow ranging from 50 lb. to 4 t.p.h. of solids.

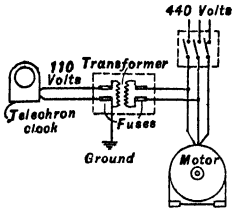

FIG. 49. Pump timer.

Calculations and pulp formulas, see Art. 24.

Timing of solution-tonnage determinations was done at HOMESTAKE (*132 #7 J 306*) as shown in Fig. 49. The branch line tapped off the 440-v. pump line was stepped down to 110-v. and then operated a Telechron clock, which thus worked only when the pump worked.

Percolation rates may be determined by means of the homemade device shown in Fig. 50 (*132 #7 J 306*).

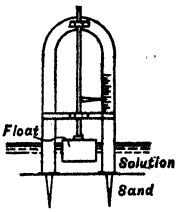

FIG. 50. Percolation indicator.

Moisture Sampling

Moisture samples are necessary to determine net dry weight from gross weights obtained by any method. The same care should be used in taking them as in other sampling. They should be weighed immediately or be held as briefly as possible in tight containers that prevent evaporation. Calculation is simplified by taking samples weighing 100 gm. or 1,000 gm. or small multiples of these weights. Samples are weighed wet, dried at a suitable temperature until all hygroscopic moisture is driven off, then weighed again; the difference represents moisture and is usually expressed as percentage of the wet weight.

Moisture samples should be taken at the time the bulk material is weighed, if possible, to avoid errors due to evaporation or subsequent wetting, hence they are generally taken at different times than assay samples. Some form of grab sampling is frequently used so that the sample can be quickly collected and placed in tight containers. The assumption is that error due to crudeness of method is less than the error introduced by longer exposure of material during more elaborate sampling. Grab samples for moisture are frequently taken from the end of a conveyor belt after material has passed over a conveying weigher.

It is difficult to obtain duplicate moisture samples that check within close limits. When ore is shipped in cars, the outer or top layers contain more or less moisture than the bulk, depending on climatic conditions; if shipped in bags, the material will probably be drier near the outside of the bag than in the middle. Thorough mixing must precede an accurate sample. If the regular sample mill is used for a moisture sample, drying in passage through the sampling mill is considerable and must be compensated in the calculation. This is usually done by an arbitrary percentage added to the percentage determined. Brunton (*40 A 567*) says that, in ordinary practice, this loss would not exceed 10% of the percentage determined in summer, nor 7% in winter. In buying and selling, a factor is determined by agreement between the parties; in one instance 10% of the percentage determined was added with a maximum addition of 1% of water based on the wet weight (*TP 86 USBM*). Duplicate determinations on relatively dry material (say under 10% moisture) should check within 10% of the percentage present.

Tests by the U. S. Bur. of Mines of 254 pairs of duplicate moisture samples of coal showed an average difference in moisture content of 0.256% with a maximum difference of 3.6% (*Bul 116 USBM*). The method employed was to use the same 15-lb. sample, obtained as described on p. 29, for determination of moisture and for analysis; it was kept in sealed airtight containers until the moisture determination.

Moisture-box used for iron ores is made with a burlap bottom overlain by 1/8-in. wire-mesh screen. The wet sample is placed in the box and allowed to drain for 24 hr., protected from the weather. The method is slow, and requires application of a factor that will vary to an unknown degree with size and mineralogical character of the material.

Car drainage method, sometimes used for iron ores, consists in applying a predetermined car drainage-rate factor to weights determined at either shipping or delivery point. Considering the inconstancy of the weather and railroad manipulation, it can have no even colorable pretense to accuracy.

5. MILL SAMPLING

Samples of feed, tailing, and concentrate or other valuable product are taken in all well-run mills to cover operating intervals short enough to permit effective control of operation. In general this period is the shift, but with a variable feed, or with a process not susceptible of ready and accurate control by visual indications, sample periods may be as short as 30 min. These samples are taken on definite schedules, either automatically (Art. 3) or by hand methods (Art. 2). The interval between cuts varies according to the material sampled (Art. 1); it is usually longest for tailing, and least for concentrate.

Head Sampling

Practice varies according to the ore, the method of treatment, and the capacity of the mill (see Table 22).

Head sampling of gold ores in general, and of spotty ores in particular, is an expensive and difficult procedure. In some cases no head samples are taken (WRIGHT-HARGREAVES), gold content of heads being estimated from bullion, tailing sample, and feed tonnage. At KIRKLAND LAKE a hand sample of ball-mill discharge and of the entering storage solution is taken every 2 hr.; density is determined; composited 24-hr. samples are divided to yield a sample which when filtered and washed gives a combined filtrate of about 600 cc.; filtrate and solids as well as the storage-solution sample are assayed; the gold value of the plant heads is the undissolved gold in ball-mill discharge plus dissolved gold therein, minus gold entering the ball-mill in grinding solution per ton of ore, all times the daily tonnage.

If the method of treatment does not involve concentration at relatively coarse sizes, head sampling is best postponed until the sample can be taken from tumbling-mill feed or classifier overflow; by this time the ore is more or less fine and well mixed, and simple automatic samplers can be used. When the flow comprises a number of parallel or different circuits, samples are usually taken before the point of division; with parallel circuits samples may be taken after division if some tonnage determining device exists in the circuit. When sampling must be practiced at coarse sizes, a separate sampling mill is used; it usually follows the coarse-crushing plant and delivers reject to the fine-ore bins.

Mills of large capacity invariably make provision for careful sampling of heads, using automatic samplers taking frequent cuts. Hand sampling of heads is most often practiced by the smaller mills and may vary in form from grab sampling of mine cars to grab sampling of crusher product. When hand sampling is used cut intervals are normally long.

Accurate head samples are not, in general, obtained unless automatic cuts are taken at frequent intervals. Information obtained by crude methods is used as a rough check on operations. Such results, averaged over a long period, may check reasonably with results obtained by calculation from accurate tailing samples and concentrate or bullion. The extent to which head assays check calculated head assays based on product assays depends not only on the assay sampling but also on the tonnage determinations. As an aid in checking, composited daily and monthly samples are prepared from the shift and daily samples.

Tailing Sampling

Automatic wet-pulp samplers are best. Ordinarily the final tailing from a mill is low-grade, finely crushed and well mixed, and there are no sudden changes in value; hence small cuts and long sample intervals are permissible. Hand sampling is more likely to be accurate than in sampling heads or concentrate. Daily samples should be composited on a tonnage basis over a monthly period; assay of this composite should check reasonably with the average daily assay. Practice is summarized in Table 22.

Concentrate Sampling

Good practice requires use of automatic samplers with short sampling intervals. The same forms of cutters as used for sampling tailing are suitable. However, if the concentrate discharged by a machine is thick and flows sluggishly, when water is added to wash it down launders it surges so much that at one instant concentrate and the next almost clear water is flowing. In such cases automatic samplers are not satisfactory and a hand cutter must be used at the discharge of the machine or some method of sampling concentrate in bins or cars after draining must be employed. Hand cutters are used extensively. Pipe or gun samples and augers are used for sampling in bins or cars. Compositing of shift samples and of daily samples aids in checking. Sampling of concentrate in the mill is a check on the sampling at the smelter, but where considerable storage time intervenes, as in large thickeners, correspondence is to be expected only over considerable periods. Table 22 gives a summary of practice at a number of mills.

Concentrate tonnage is normally determined by weighing out on track scales, with a rough check, where possible, by bin measurement. Moisture samples are taken by hand during loading, either from the car, or, where possible, from the discharge of the loading conveyor; or are grab-sampled from the top, or pipe-sampled from loaded cars. They are useful only for rough checks on subsequent smelter moisture samples because of inevitable changes during shipment.

Table 22. Sampling practice at milling plants

Mill	Ore	Tons per day	Head sampling					Concentrate sampling				Tailing sampling			
			Sampler	Interval, min.	Max. particle size	Weight of shift sample	Per cent. of whole	Sampler	Interval, min.	Max. particle size, mesh	Sample, % of conc.	Sampler	Interval, min.	Max. particle size, mesh	Sample, % of tailing
Alaska-Gastineau	Gold *a*	6,000	*b*	12	10-m.	3,000 lb.	0.025	*b*	4	0.07-in.	0.165	*b, c*	15	0.04-in.	0.0004
Amer. Z. L. & S. Co.	Zinc	2,400	.....	.....	.....	.....	.....	.....	.....	.....	.....	Auto.	4.5	0.5-in.	0.01
Argonaut	Gold	300	Hand *d*	.....	2 1/2-in.	.....	.....	Pipe	.....	*e*	.....	Tilting-box	10	28	.....
Britannia M. & S. Co.	Copper	2,500	*f*	.....	4-m.	.....	.....	Hand	60	65	.....	.....	.....	28	.....
Calumet & Hecla	Copper	11,000	.....	.....	.....	.....	.....	.....	.....	.....	.....	Hand *g*	30 to 90	0.25-in.	<0.001
Chino Copper Co.	Copper	12,000	*h*	9	1-in.	33.6 t.p.d.	0.28	Auto.	9	0.075-in.	0.0056 *i*	Auto. *j*	9	0.0232-in.	0.00016
Eagle Picher, Montana mine	Lead-zinc	250	Hand	30	5-mm.	.....	.....	Pipe *k*	30	65	.....	Hand	30	40	.....
Empire Zinc Co.	.....	700	*l*	.....	3/16-in.	6 to 7 t.p.d.	1.0	*m*	.....	.....	0.06	.....	.....	.....	.....
Engels, Superior	Copper	1,000	Auto.	14	65-m.	4 lb.	0.0006	Auto. *n*	7	65	0.012	Auto. *o*	9	65	0.0006
Federal Lead Co.	Lead	3,000	.....	.....	.....	.....	.....	Pipe *p*	.....	.....	.....	Tilting-box *q*	10	12-mm.	0.01
Federal M. & S. Co., Morning	*r*	1,200	Auto. *s*	.....	1 1/2-in.	60 t.	5.0 *t*	Hand	.....	.....	0.0001	Auto. *u*	6.25	80	0.012
Hecla Lead Conc.	*r*	750	Vein	.....	3-mm.	75 t.	10.0 *v*	Hand	.....	100	.....	Auto.	.....	48	.....
Mistabastabre	Copper	1,300	Auto. *x*	15	3-mm.	.....	.....	Auto. *x*	15	48	.....	Auto. *x*	30	20	.....
Mount Isa	Lead-zinc	*y*	Auto.	.....	10-m.	.....	.....	Auto. *z*	.....	.....	.....	Auto.	.....	.....	.....
Old Dominion	Copper	1,500	Vein	4.8-sec.	1-in.	150 t.	10.0 *aa*	Hand	.....	65	.....	Auto. *ab*	20	48	0.0056
Page mill, Federal M. & S. Co.	Lead-zinc	300	Auto. *s*	.....	1-in.	10 t.	3.3	Auto.	.....	100	.....	Auto. *x*	.....	48	.....
Pecos	*ac*	400	Auto. *ad*	20	65-m.	.....	.....	Auto. *ad*	20	65	.....	Auto. *ad*	20	65	.....
El Potosí, San Guillermo	*r*	2,300	Auto. *x*	.....	.....	*ae*	.....	Auto. *x*	.....	.....	*ae*	Auto. *x*	.....	.....	*ae*
St. Joseph Lead Co., Balmat	Lead-zinc	500	Auto. *af*	3	48-m.	.....	.....	Auto. *af*	3	48	.....	Auto. *af*	3	48	.....
St. Joseph Lead Co., Bonne Terre	Lead *ag*	2,400	.....	.....	.....	.....	.....	.....	.....	.....	.....	.....	16	100	0.0067 *ah*
St. Joseph Lead Co., Hughesville	*r*	400	Auto. *x*	20	.....	.....	.....	Pipe	.....	.....	.....	Auto. *x*	20	.....	.....
Silver King Coalition Mill	Lead-silver	300	*ai*	.....	1 1/2-in.	.....	5 *aj*	.....	.....	.....	.....	.....	.....	.....	.....
Treadwell Yukon	*r*	320	Auto. *ak*	15	100-m.	.....	.....	.....	.....	.....	.....	Auto. *ak*	15	100	.....
United Eastern Mining Co.	Gold-silver	325	Hand	30	8-m.	.....	.....	.....	.....	.....	.....	.....	.....	.....	.....
U. S. S. R. & M. Co., Midvale	Lead-zinc	1,000	Auto. *al*	.....	5/8-in.	800 lb.	0.04 *am*	.....	.....	65	.....	Auto.	.....	35	.....
Utah Copper Co., Arthur	Copper	35,000	Auto. *w*	5	1-in.	30 to 50 t.	0.09 to 0.14	Auto. *w*	10	100	.....	Auto. *w*	10	100	.....
Magna	Copper	35,000	Auto. *w*	10	100-m.	30 to 50 t.	0.09 to 0.14	Auto. *w*	10	100	.....	Auto. *w*	10	100	.....
Verde Central	Copper	400	Auto.	.....	65-m.	.....	.....	Hand	.....	65	.....	Auto.	.....	65	.....
Walker Mining Co.	Copper-iron	1,700	Auto. *ak*	.....	30-m.	.....	.....	Auto. *ak*	.....	48	.....	Auto. *ak*	.....	30	.....
Yellow Aster	Gold	2,900	Auto. *an*	16	3-m.	700 lb.	0.01	.....	.....	.....	.....	Auto. *an*	.....	100	.....
Minera de Oruro	Tin-silver	250	Auto. *aa*	*ap*	1/2-in.	80 lb. *aa*	0.7 *aq*	Hand	.....	48	0.2 *ar*	Auto. *at*	5	48	0.0125 *as*
Colquiri	Tin	750 *au*	Auto. *s*	1.5	3-in. *av*	.....	1.6 *aw*	Auger	.....	0.3	0.01 *az*	Auto. *x*	20	*ax*	*ay*

Notes: See page 56.

Notes for Table 22:

a Low grade.

b Straight-line, air-operated, Scobey timer, 1/2-in. aperture.

c 1/4-in. cutter width.

d Double handful scooped from top of each car.

e Three vanner concentrates; 35-, 65-, 200-m.

f Air-actuated, timed by tilting box.

g 3/8-in. cutter width, 5-lb. shift sample.

h Straight-line, special-design sampler, 4-in. aperture, sample crushed by close-set rolls, product sampled with a Vezin taking 3.58% cut to give 800-lb. shift sample.

i 30-lb. shift sample.

j 3/4-in. cutter width, 10-lb. shift sample.

k 6-pipe samples out of each car.

l Local design, 15/16-in. cutter width. Sample ground in 2×4-ft. Marcy mill and divided by continuous sampler (Fig. 27), 1/8-in. cutter width, to give 5- to 6-lb. shift sample.

m Automatic sampling with sampler as in *l*. Hand sampling also used.

n Filter cake and shipping cars hand sampled, latter by auger at 12 points. 4-lb. shift sample produced by automatic sampler.

o Yields 3 1/2-lb. shift sample.

p 24 holes per car of concentrate.

q 3/8-in. cutter width, 75-lb. shift sample.

r Silver-lead-zinc ore.

s Chain-and-bucket type.

t Reduced and divided to 30 lb.

u 0.625-in. cutter width, 20-lb. shift sample.

v Reduced by roll crushing and Vezin sampling to 150 lb.

w Carriage type straight-line sampler, electrically timed and driven; cutter width 5 times maximum particle size.

x Geary-Jennings.

y 2,650 t.p.d. for mixed oxide-sulphide ores, 1,880 t.p.d. for straight sulphide ores.

z Automatic sampling of lead concentrate, hand sampling of zinc concentrate.

aa Sample goes to sampling mill, where it is reduced to 480 lb. or 0.016%.

ab Two air-actuated, motor-timed samplers in series, must check each other.

ac Gold-silver-lead-zinc-copper ore.

ad Straight-line sampler of local design.

ae 15-lb. shift sample.

af Galigher #2.

ag Lead flotation tailing.

ah 20-lb. shift sample.

ai Sample is cut as ore falls from end of main conveyor onto a 24-in. apron conveyor, one 6-in. section of which is removed.

aj 5% sample crushed and cut to 1% of original lot.

ak Galigher sampler.

al Chain-and-bucket type, Fig. 35, 3×18-in. buckets.

am Sampler arranged to take two cuts at 2%.

an Locally designed, see Fig. 32.

ao 18-in. belt conveyor, 120 f.p.m., with 3 @ 1×10-in. slots cut out of belt. Sample crushed in 15×26-in. rolls, then sampled by a 14-in. belt, run at 55 f.p.m., having 4 @ 1×8-in. slots.

ap 0.08 to 0.09 min., calculated from *ao*.

aq Estimated.

ar 8-lb. shift sample.

as 20-lb. shift sample.

at 16×24-in. Galigher, 5/8-in. aperture.

au Metric tons.

av Somewhat slabby; aperture of sampler, 10 in.

aw Sample crushed to 1 in. by Dodge crusher, sampled by Vezin taking 12.4% cut, then crushed to 3/8-in. by A-C jaw crusher and resampled by Vezin taking 10% cut; final over-all cut 0.02%.

ax Jig tailing, 3.5-mm.; cutter aperture, 35-mm. Pyrite tailing, 0.3-mm.; cutter aperture 4.75-mm. Sand tailing, 0.9-mm.; cutter aperture 4.0-mm.

ay Jig tailing, 0.0025%; 3.5-lb. shift sample. Pyrite tailing, 0.0023%; 4-lb. shift sample. Sand tailing, 0.00083%; 2-lb. shift sample.

az 90-lb. shift sample.

Miscellaneous Mill Sampling

Miscellaneous mill samples are taken to give information concerning the operation of a particular machine or set of machines. When accurate results are desired and the sample must be taken every shift, automatic samplers are best. This is the case when a mill is operated in sections and the feed and products of each section are sampled to check its work. Ordinarily intermediate samples are taken by hand by various operators to serve as guides to operations of particular machines. Great accuracy is unnecessary, and the use of hand cutters and long sample intervals are justified.

Dust sampling is done to determine the nature and number of particles suspended in the air. Dust samplers function by removing particles from the original dispersion medium under the action of an artificially applied force or forces, the dust being collected as a single-layer deposit suitable for microscopic counting (jet, Konimeter, and Electrotator), or as an unordered, multilayered deposit (electric and thermal precipitators, paper thimble, salicylic acid filter), or as a suspension in a fluid (Impinger). The jet, Konimeter, and Electrotator are necessarily limited to grab samples, since volume of air sampled is relatively small; the precipitators, thimble, filter, and impinger may be used to sample larger volumes of air. Single-layer dust deposits are quantified by microscopic counting only, since amount of dust collected is too small for accurate gravimetric or chemical quantification; counts are doubtful, since comminution or agglomeration may occur. Other deposits yield a sample sufficient for gravimetric or chemical quantification, petrological examination, and chemical identification. Table 23 summarizes characteristics of various samplers.

Table 23. Characteristics of dust samplers

Sampler	Collection, method	Industrial dust collected, %	Application *c*	Quantification, method *a*	Skill required		Sample, vol.	Power required
					Sampling	Quantification		
Impinger.....	Washing	>98	L to H	M, G, C	Medium	High	Any *b*	Yes
Electrical.....	Elec. precipitation	100	L to H	M, G, C	High	High	Any *d*	Yes *e*
Thermal.....	Thermal precipitation	100	PS, L, I	M *h*	High	High	1,200 cc. *f*	Yes *g*
Paper-thimble .	Filtration	100	L to H	G *j*	Little	Medium *k*	Any *l*	No *l*
Salicylic acid...	Filtration	100	L to H	M, G, C	Little	High	Any *m*	No *l, n*
Jet.....	Jet condensation	>99 *r*	PS *o, p*	M	Little	High	50 to 1,000 cc.	No
Konimeter....	Jet condensation	>99 *r*	*q, p*	M	Little	High	10 cc.	No
Electrotator...	Elec. precipitation	>99 *r*	*s, p*	M	Little	High	2 to 8 cc.	No

a C = chemical; G = gravimetric; M = microscopic.
b Rate of sampling, 0.1 cu. ft. per min.
c Dust concentrations handled: H = high, I = intermediate, L = low; PS = for particle-size studies.
d Rate, 10 to 50 li. per min.; large samples obtained rapidly.
e Some danger from high voltages.
f 6.5 cc. per min.
g Also water for aspirator.
h Sample cannot be weighed or analyzed chemically.
i Rate, 1 to 2 cu. ft. per min.; large samples obtained rapidly.
j Drying and weighing only required for most dusts; drying very slow.
k Samples may be kept indefinitely without deterioration chargeable to sampling technique.
l Water for aspirator.
m 100 li. per min.; weight recovered permits chemical work; entire sample recovered without contamination by fiber.
n Centrifuge required for extraction of sample.
o Range, 0 to 10,000 particles per cc.
p Light weight; simple to operate; rapid.
q For particle concentrations below 18×10^6 particles per cu. ft.; collection efficiency high in range from 0 to 2,000 particles per cc.; not practical for high concentrations.
r Grab sample only.
s For particle concentrations below 4×10^{10} particles per cu. ft.; collection efficiency high below 1 or 1.5×10^6 particles per cu. ft.

Midget impinger (Fig. 51) comprises a graduated side-arm tube *a*, with side arm connected to a vacuum source (item *B*), and a sample tube *b*, with spacers *c* to maintain substantially central location. Stopper *d* is of Neoprene, to avoid filler dust; stopper *e* is of the No-air type; cap *f* is a soft-rubber policeman; guard *g* is to exclude falling solid

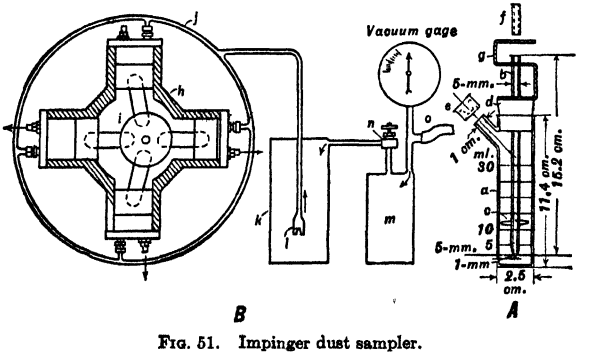

FIG. 51. Impinger dust sampler.

when *f* is off and the vacuum connection is broken. An all-glass unit overcoming the disadvantages due to deterioration of rubber and the accumulation of dust in the annular groove formed where the stopper contacts the flask is reported (*16 #5 IECA 346*).

To operate, fill *a* to the 10-cc. mark with the collecting liquid, connect the side tube to any source giving a vacuum of 12-in. water gage. Under these conditions, with a 1-mm. nozzle, air flow through the impinger is 0.1 cu. ft. per min. The resulting suspension may be counted directly, or may be diluted to give a proper concentration for easy microscopic counting (see Art. 9).

Item *B* shows a specially designed pump *h* consisting of four cylinders disposed radially at 90° about a single-throw crank *i*. Intake valves are connected to a collecting ring *j* in turn connected to a surge tank *k* through a check valve *l* and thence via a needle valve *n* through a second surge tank *m* and tube *o* to the impinger *a*. The pump is hand operated.

Paper-thimble dust sampler (*Bul 217 USPH*) consists of a single-thickness Whatman extraction shell *A* (33×94-mm.) containing well fluffed cotton wool, through which dust-laden air is drawn. Details of thimble and the brass capsule *B* which holds it in place are shown in Fig. 52. The suction side of the capsule is connected to a suitable pump; when the pump is not of positive-displacement type, a metering device for measuring air flow is used. Thimbles are dried to constant weight by preliminary drying at 90° to 95° C. for 3 to 7 days in an ordinary oven, followed by drying at 90° C. for 7 hrs. in a vacuum oven; drying at 90° to 95° C. for two days in a hot-air oven may be used as a substitute for the latter drying stage.

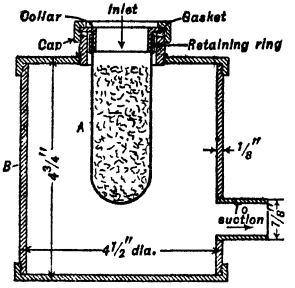

FIG. 52. Paper-thimble sampler.

Operation. Place dried, weighed thimble into retaining ring, insert collar, and screw on cap. Operate pump until desired volume of air has been filtered. Remove thimble, dry as above, and weigh.

Salicylic acid-filter sampler (*37 JCM 161, 166, 533; 38 ibid. 27*), using a filter bed of salicylic acid crystals, should be used if chemical or petrological tests on the sample are contemplated, since it yields a dry sample uncontaminated by any extraneous material introduced in collection. (A labyrinth-type collector devised to obtain 100-gm. samples for solubility tests (*38 JCM 27*) fails to collect <5-μ material effectively.)

The filter (Fig. 53) consists of a bed 3 to 4 mm. deep of <40-m. commercial-grade salicylic acid placed on stainless-steel screens *A* (140-m. between 2 @ 20-m.) which are in turn rigidly supported by an ebonite grid *B* screwed into cell *C*. Cell *C* screws onto ebonite funnel *D*, the joint being made airtight by a rubber gasket. The filter holder is attached by pressure tubing to an ejector-type vacuum pump *E*, especially designed for underground sampling where compressed air (60 lb. per sq. in.) is usually available. Capacity of the filter varies with the area and driving pressure; capacities of 7.5 to 12 li. per min. per sq. cm. of filter area are obtained using acid pads 3 to 4 mm. thick with a pressure drop of 11 to 13 cm. of Hg across the filter.

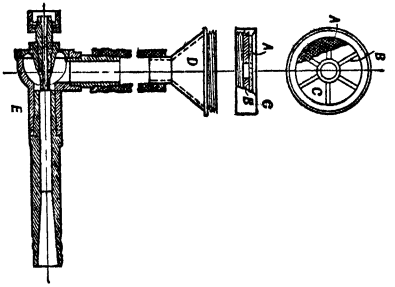

FIG. 53. Ejector with salicylic acid filter.

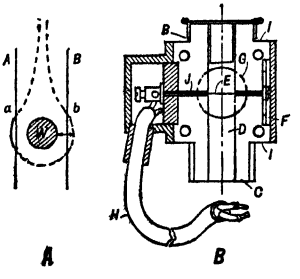

FIG. 54. Thermal precipitator (*after Watson*).

Operation. Connect ejector to air supply in sampling location. Charge cell *C* (this is usually done in laboratory, and a sheet of cellophane, held by rubber band, is placed around it to prevent loss during transport); level bed by shaking and smooth surface with finger (with cellophane covering still in position). Connect charged cell *C* to the ejector, remove cellophane and start air to ejector immediately. Read dry gas meter at beginning and end of sampling period to obtain volume of air sampled; correct by a calibration factor for the reduced pressure of the air passing through the meter. Transfer filter pad and sample to a centrifuge tube (12-cc. volume for 4-gm. pad), add 9 to 10 cc. of alcohol and separate sample from salicylic acid solution by centrifuging. Extract several times with alcohol and finally with ether to insure a dry residue.

Thermal-precipitator sampler (*37 JCM 166; Medical Research Council Special Report Series, No. 199, London*) uses the dust-free space surrounding heat-radiating bodies to filter dust out of the stream being sampled. Thus if two records (cover-glasses) *A* and *B* (Fig. 54, item *A*) are so located that the dust-free boundary (shown by dotted line) inter-

cepts the surfaces of the records and dust-laden air is drawn down slowly toward the heated wire *W*, particles are unable to penetrate the dust-free barrier and so deposit on the record surfaces at *a* and *b* (*32 Trans. Far. Soc. 1073*).

The precipitator head (item *B*) consists of two brass blocks *I* fastened together to form a cube with short cylinders *B* and *C* above and below respectively. Thin bakelite strips *J* provided with windows to leave a channel *D* (0.92×0.05 cm.) running vertically through the instrument (channel is a wedge widening to 0.92 cm. square at top) are clamped between the blocks and insulate a resistance wire *E* stretched across the center of the channel and kept taut by tongue spring *F*. The cover-glass records ($^3/_4$-in. circular cover glass) are introduced into the brass blocks through holes *G* and are held in position against bakelite strips by brass plugs pressed against them by flat springs. One terminal of the twin cable *H* is connected to the resistance wire, the other to the brass blocks. The cable is connected to a 2-v. battery with a fuse, ammeter, resistor, and switch connected in series. The bottom projecting cylinder *C* screws on to the top of a 1,200-cc. cylindrical tank, equipped with a graduated water level tube. Water leaves the cylindrical tank through an adjustable petcock (located at bottom of tank) and draws air through the precipitator head.

Operation. Clean precipitator head and wire thoroughly. (Grease on wire is removed by passing 1.2 amp. current until no deposit is evident upon clean cover glasses after a 10-min. heating period.) Place clean records in position. Fill aspirator with water to zero level. Attach precipitator head to aspirator. Switch on current and adjust to 1.2 amp.; after 10 sec. open petcock to give desired rate of flow; note time. At end of sampling period, turn off tap, switch off current, note time and volume of water run out of aspirator. Remove records for subsequent testing.

Electric precipitator (*14 J. Ind. Hyg. 364*) consists of a precipitator tube *A* (Fig. 55, item *a*) through which dust-laden air is drawn and therein subjected to an electric field

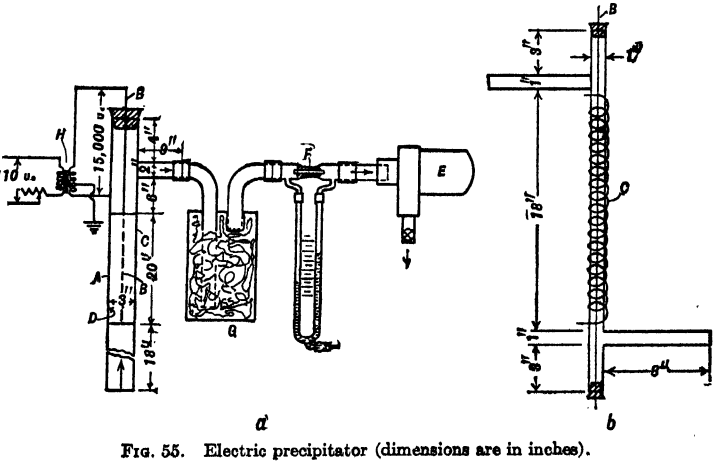

FIG. 55. Electric precipitator (dimensions are in inches).

of high voltage which precipitates the dust (see Sec. 9, Art. 7) upon a lining *D* of celluloid or filter paper. Either of two forms of Pyrex precipitator tubes is used; the larger (in item *a*) is adaptable for sampling at 15,000 v. and relatively high rates of air flow, whereas lower rates and voltages are used with the small tube (item *b*). The precipitating or central electrode *B* is made of a fine wire of gold-plated drill steel in the case of the larger tube; a fine platinum, gold, or copper wire is more suitable for the smaller tube. The outer electrode *C* is made of either metal netting, of metal foil (as in item *a*), or of spirally wound copper wire (item *b*). The central and outer electrodes are connected to the high-voltage side of a General Electric Co. luminous-tube transformer *H*, operated from a 110-v. 60-cycle line; a secondary current of 30 ma. at 15,000 v. is produced. By means of a rheostat in the primary circuit, output voltages ranging from 8,000 to 15,000 may be obtained. The record may be the inner surface of the precipitator, or a snugly fitted lining of celluloid or filter paper. Air flows through the sampler under the action of a vacuum-cleaner fan *E* or a compressed-air ejector (Fig. 53); a flowmeter *F* measures rate of flow. Toxic gases which may be produced in the operation of the precipitator

are removed by a trap G containing activated charcoal. The destructive action of these gases upon rubber connections necessitates frequent inspection.

Operation. Clean the precipitator tube; insert lining (if used) and attach to air-flow system. Start fan or ejector. When flowmeter shows constant rate of flow, start current to primary of transformer and note time. Operate for desired length of time, turn off current, and remove record. Care should be taken to prevent shocks. Quantify record by microscopic counting or chemical tests.

Electrotator sampler (*18 J. Ind. Hyg. 583; 19 ibid. 579*) consists of a rotating electrostatically charged record A (Fig. 56) whose surface attracts and holds dust particles from the impinging jet or jets produced by one or more nozzles B fed by a hand-operated pump, as shown. The recording disk A, 3.2 cm. diameter, made of celluloid, is supported by table C and held by three pins D which engage three similarly disposed holes in the disk. The circular table, made of some insulating material such as ebonite, and centrally cored, screws onto the nozzlelike end of valve block E which in turn screws onto the Archimedean screw F. Screw F engages threads cut on an Archimedes spiral in plunger G and is then contained within hollow rod H. Located within the pump cylinder immediately below block E is a metal plug I equipped with egress ball-valve J. Surrounding table C is an annular flange K (ebonite), drilled on one side, as shown, to receive a small spring which bears against a small special exciter L used to assist in the electrification of the disk. An ebonite cap M is screwed down over the externally threaded flange until the rims N are in contact. When the cap is thus adjusted, the celluloid record is in sliding contact with faces O and P. Multiple-nozzle block Q fits within the cap and is located by pins. Sliding piece R is bored with holes in the same relative position as those bored through the nozzle block; it is free to rotate within the cap through an arc of 180°, the motion being controlled by a pin S passing through a semicircular cut in the cap; when properly located, it is fixed in position by a screw collar T.

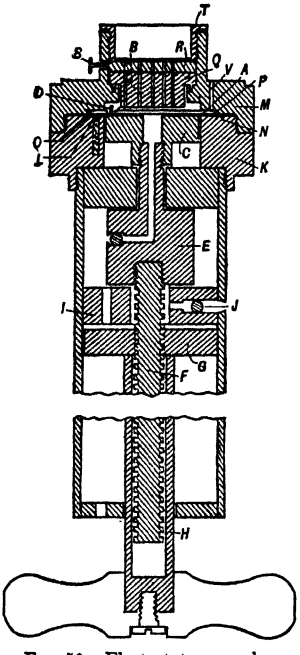

FIG. 56. Electrotator sampler.

Downward movement of plunger G causes screw F, together with the valve block E, and table C, to rotate. Disk A, which is carried by table C, is, therefore, rotated and electrified by rubbing against O and P. Downward movement of the plunger also closes valve J and opens valve E, hence air is taken into the sampler through the holes in the nozzle block. Reverse motion of the plunger closes valve E and opens valve J while table and record are caused to rotate in the opposite sense. Pump capacity is about 100 cc. per stroke; this may be varied to suit the sampling problem.

Choice of record areas is obtained by rotating R relative to Q. When R is in such position that the holes therethrough form a continuation of the holes through Q, all ingress holes are open and a maximum record area is available in the form of two or more circular tracks, depending on the number of holes through Q. When R is turned so that only the central ingress hole is open, a minimum record area, in the form of a spot, is obtained. By having several additional holes through R it is possible to select any one of the holes in Q by rotating R to the required extent, thus record areas between the maximum and minimum become available. If a track of exceptional length is required, a hole V may be drilled through the body of the cap M. The track area obtained by using an ingress hole with radius r, whose center is x units from the axis of rotation, is $4\pi xr$ square units. If, say, 5 ingress holes of equal radii were used in sampling 100 cc. of air, each hole would pass 20 cc. If the values of x for the five holes were 1, 2, 5, 7.5, and 10 mm., the record areas would increase proportionately, while the concentration of particles per unit area of record track would decrease in inverse proportion. Hence the operator may select that track which is best suited for microscopic counting.

Operation. Place a clean record in position on the table and screw down cap. Rotate slide piece until desired ingress hole (or holes) is open. Fix slide piece in position by means of screw collar T. Operate pump for the desired number of strokes. Remove record to stage of microscope and count particles in track. The number of particles N per unit volume of air is given by $4\pi rxn/V$, where n is number of particles per unit area of record and V is volume of air passing the ingress hole which made the track.

Konimeter (*Bul 217 USPH*) samples dust by impinging a high-velocity air jet formed by nozzle *A* (Fig. 57) against a glass-plate record *B*, filmed with petrolatum. Plate *B* is cemented with Canada balsam to a toothed brass ring *C* which fits snugly within the recess of brass cup *D* and is held firmly against a hard-rubber ring *E* by spring *F* attached to the inner surface of cover *G*. Brass gear *C* engages a pinion *H* operated on a rod extending outside the instrument. The face of gear *C* is circularly divided into 29 sectors, each one numbered so that a record of each sample may be kept. Two circular windows *I*, *J* cut in cover *G* permit observation of sector number and dust sample. An intake nozzle *A*, of 0.0225-in. (0 57-mm.) diameter is screwed into the base of cup *D* so that tip of nozzle is 0.0197 in. (0.5 mm.) from the prepared surface of plate *B*. The cell formed by the plate, the rubber ring *E*, and the base of cup *D* is in communication with a valveless cylindrical suction pump *K* by means of the 0.067-in. diameter hole *L*. Pump is constructed as shown in Fig. 57 and operated as in the following paragraph. Pump capacity is about 10 cc. of air per stroke; the exact amount may be determined by attaching the nozzle to a graduated gas burette containing water and noting the amount of water displaced per stroke of pump. A 5- or 2.5-cc. capacity Konimeter is manufactured by C. Zeiss (*28 JCM 79*).

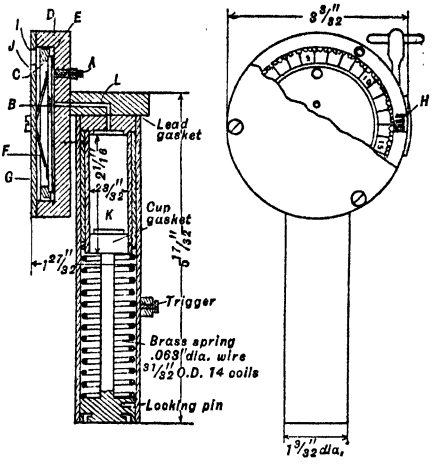

FIG. 57. Konimeter.

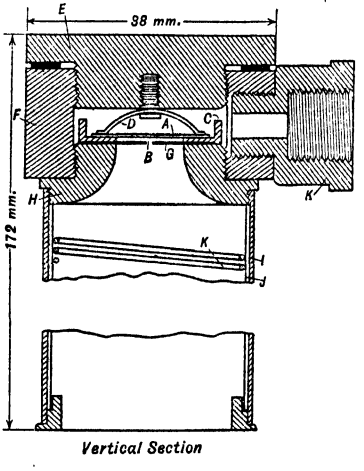

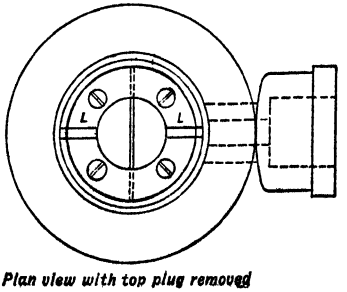

FIG. 58. Jet collector (*after Owens*).

Operation. Clean instrument carefully; use a horsehair (or other suitable material) to clean nozzle. Clean the glass-plate record (cemented to gear) and give a thin coat of filtered petrolatum by rubbing evenly with a glass stirring rod. Assemble instrument, and turn pinion rod until sector No. 1 is opposite nozzle. Push piston inward until it is caught and held by locking pin. Locate instrument at point where sample is to be taken and press trigger. After all sectors have been exposed remove record and make a microscopic count of samples (Art. 9).

Jet collector (*4 J. Ind. Hyg. 522*) consists of a cover-glass record *A* (Fig. 58) on which impinges the dust-laden jet formed by slit *B*. A microscope cover glass *A*, 2-cm. diameter, is held firmly in the recess of ring *C* by a three-claw spring *D* fixed to the inner surface of screw-plug *E* in sleeve *F*. The joint between plug *H* and sleeve *F* is made airtight by means of a leather washer. Slit *B*, 0.1 mm. wide, is formed by two semicircular metallic plates *G* attached to plug *H* and ring *C* by countersunk screws. The cylindrical cell formed by the record, plates *G*, and ring *C* is about 1 mm. high and 2 to 10 mm. in diameter, depending on the diameter of the opening in ring *C*. An approach tube *I* is screwed to plug *H* and is lined with absorbent material (blotting paper) *J*, held in position by suitable fastenings *K* (3 or 4 coils of some brass spring wire). Sleeve *F* has an annular recess formed by the inner ends of plugs *E* and *H* which is in communication with a connection *K* for attachment to a hand air-pump of measured

capacity per stroke (about 50 cc.). This recess communicates with the cell through channels L cut into the upper surface of ring C. When pump is operated, pressure within the cell is reduced and air flows through the slit. The decrease in temperature of the air due to the decrease in pressure produces condensation of water vapor on the dust particles. These minute water droplets impinge on and adhere to the cover glass; subsequent evaporation of the water leaves the dust particles adhering to the record.

Operation. Moisten blotting paper in tube I with water and screw on to plug H. Attach pump and operate until approach tube I is filled with the air to be tested. Remove plug E, place carefully cleaned cover glass in position, and replace plug E (speed is essential). Operate pump until the desired volume of air is drawn through slit B, allowing sufficient time between strokes for air in approach tube to absorb water from the lining. Remove plug E and invert instrument over palm of hand to drop record out of ring. Make a microscopic count of record (see Art. 9).

Kiln-stack gas sampler (*43 #1 RP 29*) illustrates application of the principles of the filtration (paper thimble) and settlement samplers (highly inaccurate, based on settling of dust from still air on to a record) to a particular problem. Dust-laden gas, under action of pressure difference created by pump Z (Fig. 59; item *a*), enters nozzle A and proceeds

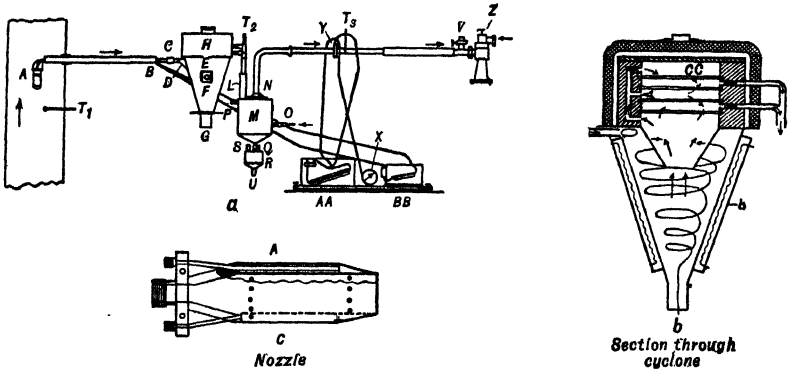

FIG. 59. Kiln-stack gas sampler.

to electrically heated (180° C.) cyclone E, where part of the dust is removed by settlement and the remainder by filtration through the paper filters CC (item *b*); the dust-free gas proceeding to a water separator M, where gas is cooled and water removed by condensation. Condensate is collected in a vessel R which may be drained, without interfering with gas flow through M, by closing valve Q and opening valves S and U. The cooling water enters M through O and leaves through P. The cool, dry, clean gas leaving M passes through an orifice-type flowmeter Y with differential leads to manometer AA hooked in on low- and high-pressure sides; a gage X tapped in on the pump side records suction pressures. The sampling nozzle A (item *c*) is equipped with static openings on the inside and outside of tube; connection to differential manometer BB shows difference in static pressures of gas flowing in stack and in nozzle. Valve V is used to control air flow so that difference in static pressures is zero. Location of nozzle within stack is such that there exists at least a five-diameter (stack) length fore and aft of the nozzle. Provision is made for heating the nozzle in cases where the gas sampled approaches the dew-point at the point of sampling. Thermometers T_1, T_2, and T_3 are inserted at locations shown.

Operation. Close slide gate of G and valves S and U, open valves V and Q and start cool water circulating through M. Start pump and regulate valve V (by closing) until pressure difference shown by manometer BB is zero. Read thermometers T_1, T_2, and T_3 as well as manometer AA and gage X. Repeat readings every 5 min. and collect and weigh condensate. At end of run collect and weigh dust (size by air elutriation or other means, if necessary). Flowmeter readings at temperature T_3 are corrected to temperature T_1 by allowing for increase of gas volume produced by a temperature change of $(T_1 - T_3)$° C. (the gas is assumed saturated with water vapor at temperature T_1). From weight of condensate per unit of time, the volume of water vapor per unit of time that must be added to the corrected flowmeter rates may be computed. The weight of dust per unit volume of gas is then readily calculated.

6. CUSTOM SAMPLING MILLS

A custom sampling mill is a plant comprising a series of crushers and sampling devices with suitable storage and transport accessories, all so arranged that the plant can receive ordinary run-of-mine rock in shipments up to several carloads, run the lot through the plant as a batch, and deliver a sample, and a reject more or less crushed as desired.

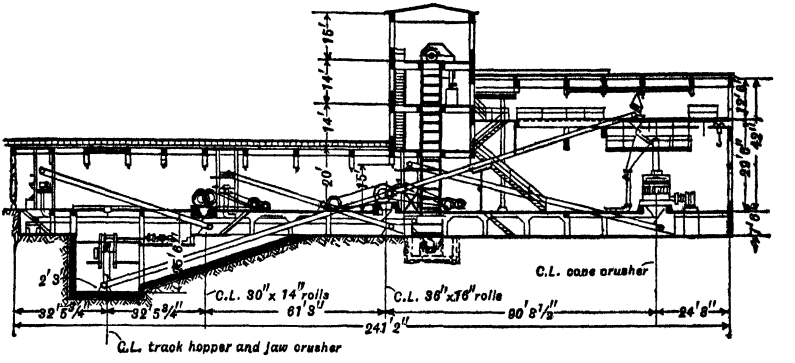

FIG. 60. One-level sampling mill, UTAH ORE SAMPLING CO. (see Fig. 62 for flowsheet).

Some sampling mills are run in conjunction with a mill and/or smelter, in which case they may buy the ore, or mill it on a custom basis (see Sec. 2, Arts. 25, 50). In such plants, if the ore is to be finely crushed for treatment, it may be broken to small size before samples are cut. Unless, however, the purchasing contract makes settlement compulsory on an umpire assay without resampling, such fine crushing of the lot must be done in the small crushers in the sampling plant with resulting loss in efficiency. If resampling is eliminated by contract, the lot can best be sampled in the mill at a point just prior to any division of the ore stream, all crushing thus far having been done in large mill crushers.

Arrangement of plant. Sampling mill construction of the early days was of the tower type wherein the building consisted of several floors; the ore was elevated by means of bucket elevators to the top of the building and was then allowed to pass through successive crushers and sampling devices, under the action of gravity, being finally delivered to the loading bins or platform. The chief objections to this type of construction are: (1) placing heavy intermittent machinery, such as a jaw crusher, on the upper floors, and (2) the use of bucket elevators, which are difficult to clean, and yet must be cleaned to prevent salting material subsequently sampled. Recent designs are mostly one-level type, using belt conveyors for elevation. Such mills are cheaper to build and simpler to operate; one crane can serve all machines; power distribution, attendance, supervision, and repair are all facilitated. Pulsifer (*121 P 866*) estimated that straight-line single-bay mills could be built 25 to 40% more cheaply than elevator-type mills. UTAH ORE SAMPLING CO. Unit D (Fig. 60) illustrates the one-level mill; the WASHOE plant (Fig. 61) the tower-type.

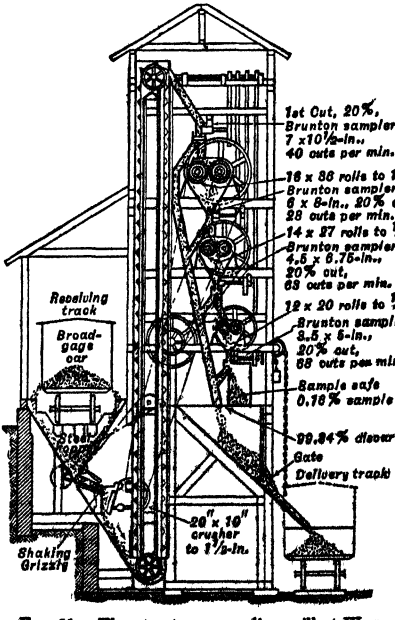

FIG. 61. Elevator-type sampling mill at WASHOE.

Flowsheet of a sampling plant comprises (1) crushing through some limiting size, (2) sampling at this size, (3) crushing the sample and again sampling, and (4) repetition of step (3) until a sample of the desired weight is obtained. The weight of sample taken at each stage is such as to bring uncertainty within the desired limits (Art. 1).

The machines used are of standard design. Primary crushers are jaw or gyratory (Sec. 4, Arts. 2, 3); reduction gyratories, or cones for intermediate crushing (Sec. 4, Art. 7); rolls or rod mills for finer crushing (Sec. 4, Art. 8; Sec. 5, Art. 7); samplers (Art. 7); conveyors and feeders (Sec. 18); screens (Sec. 7).

Flexibility of plant should be provided for in the design, since it is contemplated to handle materials differing widely in size and value. It should be possible to by-pass primary crusher with fine lots; or to by-pass one or more of the samplers when a small lot of material is to be sampled or when the ore is spotty. It is sometimes desirable to deliver a finer discharge, as when the shipment is to be sold to a concentrator, in which case crushing may be carried to ball-mill feed size prior to commencement of sampling.

Flow should be continuous and uniform, otherwise a given sampler may take no material during one or more revolutions and this failure may be multiplied in succeeding machines by synchronism, or two samplers may so synchronize for several revolutions that the second receives all of the sample cut by first. Any case between these extremes may occur, and in no case will the correct proportion be cut or the sample be representative. To avoid such contingencies, surge bins or feeders with some storage capacity should be placed between successive sample cutters.

Stoppage due to power failure or inadvertent throwing of a switch should not be accompanied by piling up of material, with spill and consequent loss or contamination. This may be prevented by suitable electric interlocks on the driving motors (see Fig. 63).

Accessibility. All parts of a sampling mill should be easily accessible for cleaning and observation. Housings on crushing and sampling machines should be detachable, and easily removable doors should be provided in all housings for elevators, chutes, launders, etc. Chutes and launders should be designed with minimum turns. Hoppers and bins should be constructed so that no material hangs up when they are emptied. Every precaution should be taken to avoid the possibility of clogging or leakage of material.

Legend for Fig. 62:

1. Shipments received in railroad cars.

2. Bar grizzly, 11-in. openings, located over track hopper (3); oversize sledged to pass.

3. 75-ton track hopper; discharge gate runs on roller guides and is actuated by gear and pinion from a free-running handwheel. 1 @ 36-in. steel pan-conveyor feeder inclined 6-i.p.f., driven by 2 @ 10-hp. slip-ring induction motors through a 256 : 1 gear reducer, so connected that 32 speeds in the range 4.5–1.3 r.p.m. are available, corresponding to a capacity range of 140 to 40 t.p.h.

4. Grizzly, 3-in. openings; fabricated entirely of manganese steel castings.

5. 1 @ 15×24-in. jaw crusher, 5-in. set, 250 r.p.m., 40-hp. motor.

6. 1 @ 24-in. belt conveyor with suspended magnet at head pulley; loading hopper and skirting designed to prevent spill and provide for quick clean-up.

7. Traylor vibrating screen, 3/8-in. aperture; feed checked by loose chains which help to prevent spill.

8. 1 @ 5 1/2-ft. standard cone crusher, 3/8-in. set, 490 r.p.m.; capacity at 3/8-in. is 100 t.p.h. Set varied as desired from 1 1/2- to 3/16-in.

9. 1 @ 24-in. belt conveyor.

10. 1 @ 6-in. Utah Ore Sampling Co. sampler (Fig. 38), 20% cut, 39 cuts per min.

11. 1 @ 18×8×8 1/2-in. bucket elevator, 400 f.p.m., 30-hp. motor; 1 @ 24-in. belt conveyor; 1 @ 125-ton reject bin so located over railroad track and 125-ton Fairbanks-Morse track scale that when cars are being loaded they are in weighing position.

12. Shaking feeder, 150 @ 3-in. s.p.m.

13. 1 @ 36×16-in. Traylor heavy-duty rolls, 3/16-in. set; power roll driven by 30-hp. motor at 75 r.p.m.; idling roll by 15-hp. motor; Tex-rope drives.

14. 18-in. belt conveyor.

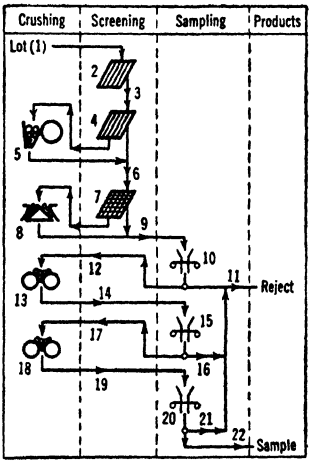

15. 1 @ 3-in. Utah sampler, 10% cut, 43 cuts per min.

16. 18-in. belt conveyor.

17. Shaking feeder, 150 @ 3-in. s.p.m.

18. 1 @ 30×14-in. Traylor rolls set to make <10-m. product.

19. 18-in. belt conveyor.

20. 1 @ 3-in. Utah sampler, 10% cut, 47 cuts per min.

21. 18-in. belt conveyor.

22. Delivered to a sample buggy securely housed in a sample vault.

Fig. 62. Utah Ore Sampling Co.

Cleaning between successive lots of ore is essential in order to avoid salting. Ordinarily compressed air and brushes are used for cleaning fine material from machines and spouts; floors should be swept and all material collected put with the lot just run through, or so disposed of as to preclude contamination of succeeding lots.

Dust losses. When a sampling mill has many open windows and a strong wind is blowing, the dust loss may be 5% of the total lot. As fine material is generally of higher grade than coarse, serious losses may thus occur. Further, it is hard to keep good labor in a dusty plant. Where hand sampling is employed, the ore is frequently dampened to keep down dust; this causes fine material to coat the larger pieces and thus aids in mixing. Wetting causes material to stick in automatic samplers and is, therefore, not permissible in sampling mills. Here all sampling machinery and crushers should be enclosed in dustproof housings, all chutes should be covered and free from leaks, and a dust-collecting system designed to deliver the dust from each lot sampled in one batch should be installed. If frequent observation of moving parts is necessary, small doors that can be readily opened, or coverings with removable sections, should be provided.

Utah Ore Sampling Co., Fig. 62 (*129 ¾5 J 233*).

Location: Murray, Utah.

Ores. From Park City, Tintic, and Murray.

Capacity 140 t.p.h. maximum.

Drive: Equipment is electrically interlocked (see Fig. 63) so that motors driving crushers, conveyors, and elevator can be started only in a sequence counter to the direction of the ore flow. By the use of relays and interlocking switches, failure of a motor automatically shuts down the motors of all conveyors preceding, but permits all succeeding equipment to function. Crushers are not stopped when the preceding conveyor stops.

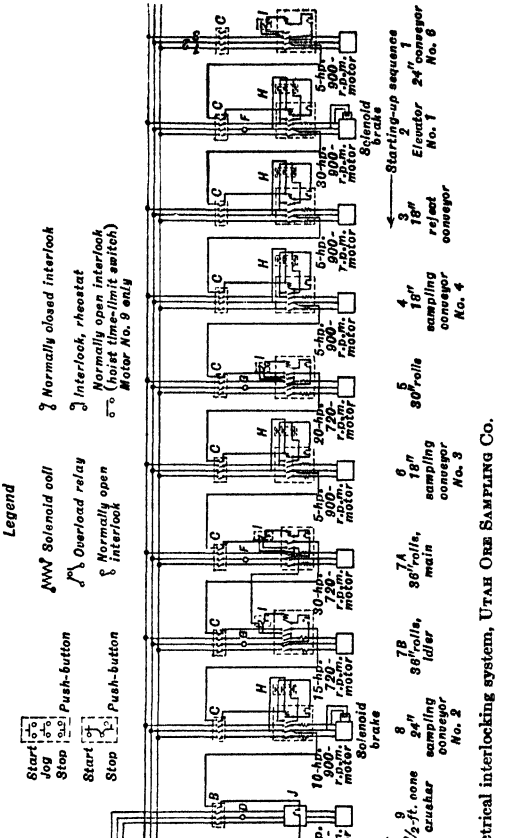

Fig. 63. Electrical interlocking system, Utah Ore Sampling Co.

Summary. 2-stage crushing in open circuit to 3/8-in., at which size sampling starts. 1 @ 20% and 2 @ 10% sample cuts with open-circuit roll crushing between stages; final cut at <10-m. Sample is 0.2% or 4 lb. per ton of feed. It is removed to a bucking room where it is further divided, dried, crushed, mixed, and subdivided until a final sample of about 3 lb. remains. MOISTURE SAMPLE is taken from the loaded cars under the reject bin by cutting numerous uniform trenches from the cones formed in the cars while loading.

Tacoma smelter (Fig. 64) shows the scheme of unloading from boats and sampling at Point Defiance, **Wash.** Ore is lifted from boats by 42-cu. ft. Brown-hoist bucket (*a*) and is dropped into hoppers (*m*)

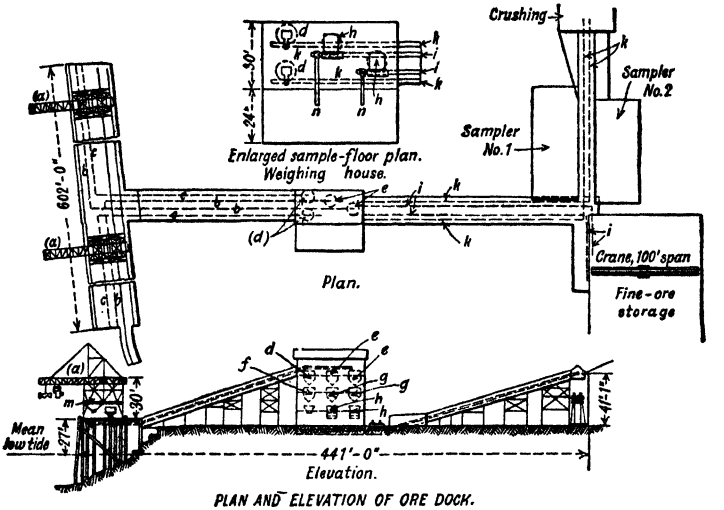

PLAN AND ELEVATION OF ORE DOCK.
(*a*)

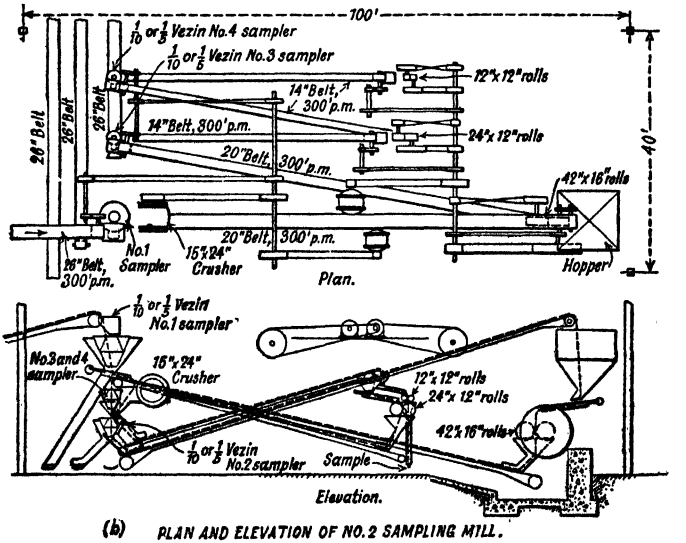

(*b*) PLAN AND ELEVATION OF NO.2 SAMPLING MILL.

FIG. 64. TACOMA sampling plant.

feeding onto 24-in. belt conveyors (*b*, *c*). Conveyors (*b*) deliver concentrate to 550-cu. ft. hoppers (*e*), and conveyors (*c*) deliver coarse ore to 550-cu. ft. hoppers (*d*) in the weighing house. Directly below hoppers (*d*) and (*e*) are weighing hoppers (*f*) and (*g*) equipped with 60-ton Fairbanks-Morse recording scales. Concentrate passes from the weighing hoppers to Martin samplers (*h*) (Art. 3) which cut a 1/100 sample in two cuts of 1/10 each. The samples are delivered by belt conveyors (*n*) to the finishing

room for preparation of moisture and assay samples. Rejects from the Martin samplers are delivered to storage bins by conveyors (*i*). Ore after weighing is delivered to the sampling-plant bin by belt conveyors (*k*). The method of obtaining coarse-ore samples is shown in Fig. 64, item *b*, which, by variation in the percentage taken by each sampler, can deliver a final sample of 1/600 to 1/10,000 of the original lot. A large variety of gold, silver, and copper ores and concentrates is handled (*119 J 557*)

Bird Dog mill, Fig. 65 (*131 #8 J 351; 131 #2 J 49*).

Location: Ottawa, Okla.
Ore: Pb-Zn ore from three separate tracts leased from different owners.
Capacity: 110 t.p.h.
Storage: Daily output from each tract kept in a separate coarse-ore bin. Feed chute of sample bins co-ordinated with coarse-ore bins by central controller unit (p. 49).

Legend for Fig. 65:

1. Railroad cars weighed on a Howe track scale equipped with a Streeter-Amet automatic tape recorder discharge into 4-subsurface bins @ 200-ton, one for each ore, the fourth providing a reserve, each discharged by 36-in. apron conveyor.
2. 1 @ 30-in. jaw crusher, 4-in. set.
3. 1 @ 24-in. belt conveyor, 250 f.p.m.
4. Gate cutter, 10% cut, 1 cut per 3 min. (See p. 49.)
5. By rotating gravity chute (see p. 49) to 1 of 4 @ 50-ton bins, discharge taken by 1 @ 24-in. belt conveyor.
6. 1 @ 16-in. jaw crusher, 1-in. set.
7. 1 @ 12-in. belt conveyor.
8. Gate cutter, 10% cut every 30 sec.
9. 1 @ 12-in. bucket elevator.
10. Leahy vibrating screen, 1/2-in. square aperture.
11. 1 @ 18-in. rolls.
12. Gate cutter, 10% cut every 14 sec.
13. 1 @ 12-in. belt conveyor.
14. 1 @ 18-in. bucket elevator.
15. 1 @ 800-ton bin.
16. Sample reduced by a cone sample grinder set at 1/8-in., product riffled to give a 75-lb. assayer's sample.

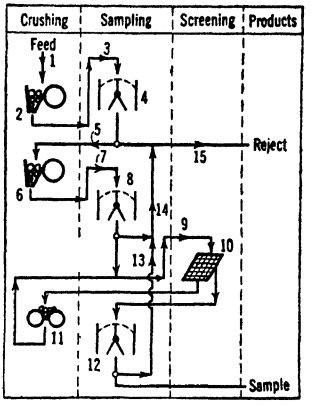

FIG. 65. BIRD DOG MILL.

Summary. Single-stage crushing in open circuit to 4-in. at which size sampling begins; 3 @ 10% sample cuts with crushing between stages, final cut on undersize of 1/2-in. screen closing circuit on final crushing stage.

Hecla Mining Co., Fig. 66 (*IC 6600*).

Location: Gem, Idaho.
Ore: 8.7% Pb, 4.8 oz. Ag, 1.2% Zn.
Capacity: 900 t.p.d. maximum.

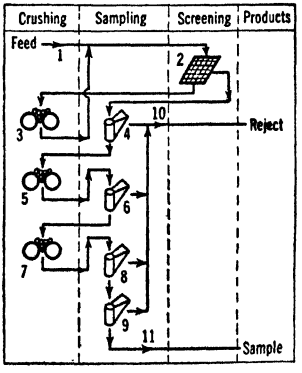

Legend for Fig. 66:

1. From coarse crushing and sorting plant.
2. 1 @ 36×60-in. trommel, 30-mm. aperture.
3. 1 @ 42×16-in. Garfield rolls.
4. Vezin, 10% cut.
5. 1 @ 26×15-in. rolls.
6. Vezin, 10% cut.
7. 1 @ 24×12-in. rolls.
8. Vezin, 10% cut.
9. Vezin, 10% cut.
10. To mill.
11. About 150 lb.; 0.01% sample riffled to assay size.

FIG. 66. HECLA MINING CO.

Summary. Closed-circuit roll crushing to 3-mm. at which size sampling starts, 4 @ 10% sample cuts with open-circuit roll crushing following first and second stages. Despite large primary sample cut at relatively small size and high total percentage taken for final sample, results are erratic.

Old Dominion, Fig. 67 (*IC 6467*).

Location: Globe, Ariz.
Ore: Copper.
Capacity: 1,500 t.p.d.
Sampling mill: Built in 1914 when company treated custom ores, then adapted to sample company ore and lime.

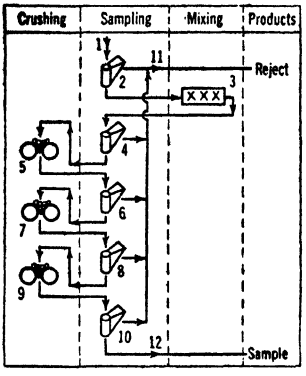

Legend for Fig. 67:

1. From coarse crushing plant @ 1-in.
2. Vezin, 13 r.p.m., 10% cut.
3. Mixing barrel, 12 r.p.m.
4. Vezin, 21 r.p.m., 20% cut.
5. 1 @ 36×16-in. A-C rolls, 72 r.p.m.
6. Vezin, 32 r.p.m., 20% cut.
7. 1 @ 28×14-in. CIW rolls, 150 r.p.m.
8. Vezin, 23 r.p.m., 20% cut.
9. 1 @ 12×12-in. CIW rolls, 150 r.p.m.
10. 2-Vezin samplers, 25 r.p.m., each taking a 10% cut of stream.
11. Reject by 12-in. elevator to storage.
12. Original and duplicate samples, each 0.008% of original material.

FIG. 67. OLD DOMINION.

Summary. Five stages of sampling, 1 @ 10% followed by 4 @ 20%, with open-circuit roll crushing between last four stages and mixing after first stage.

Portable sampling mill, designed by the U.S.B.M. (*IC 6545*) for coal sampling on location, consists of a truck on which are mounted a swing-hammer crusher with 20-hp. gasoline-engine drive. Crusher is fitted with 3/16-in. gratings and run at 1,100 r.p.m. Crusher product is divided by a 12-chute riffle, which is supported when in service by arms hooked onto the chassis frame under the crusher. Sample is collected in tubs slid under riffle spout, which is 19 in. above road; reject falls to the ground. Crusher is cleaned by compressed air at 100-lb. pressure supplied by a small compressor mounted on the truck. Capacity is about 1,000 lb. per hr.

7. PREPARING SAMPLES FOR ASSAY

The problem involved in preparation of samples for assay is to reduce them to a particle size that will justify cutting out an assay sample weighing, ordinarily, between 1 and 30 gm. and that will be fine enough to dissolve or otherwise yield its values completely within a reasonable time. These requirements are ordinarily interpreted to require a particle size of 65-m. limiting or smaller. Hence, since head samples, almost invariably, and other samples, frequently, are much coarser than this, and their bulk is too great to justify reduction of the entire sample to such a particle size, procedure is to follow a plan of successive size reduction and sample cutting similar to that of a custom sampling mill (but in most cases on a much smaller scale) until from 1 to 5 lb. only is left for grinding to assay size. If the mill sample is large, it will normally be run down by machine, as in the custom mill; if small (a few tons) it may be run down by hand, although a one- or two-stage sampling mill run batch to reduce to 100 lb. or less is normal unless labor is very cheap; lots of 100 to 500 lb. are ordinarily crushed in small hand-fed machines and sampled by hand methods.

Marking samples. In custom-sampling mills, where many different lots are run in succession through the mill, ample provision must be made to avoid possibility of confusion of samples. A satisfactory method is to keep a complete record of the treatment of each lot on a suitable form convenient for filing. This form should accompany each sample until the work is finished and the sacked sample delivered to the assayer. It should then be filed for permanent record In mill work, when samples are of small bulk and can be held in pails or pans, small numbered tags of copper or brass are convenient for identification. Complete record of identity of sample is kept in a notebook record on a form numbered the same as the pan or pail.

Samples in sacks may be marked with linen or paper tags. If there is danger of the tags becoming wet, a thin coating of hot paraffin or shellac will prevent the marking on the tag from being obliterated or changed.

Assay-office Procedure

Samples delivered to the bucking room or assay office range in weight from a few pounds to 100 lb. Pre-assay procedure usually comprises drying, and coarse and fine grinding as required.

Drying is done in ovens or on stoves or hot plates. Steam, electricity, or burning coal, wood, gas, oil or other material may be used to furnish heat. Exhaust-steam tables are particularly desirable. Steam is usually circulated through coiled pipes arranged in shelves on which the sample pans are placed, or through false-bottom steam tables on which samples are dumped. (See Fig. 164.)

Dewatering of wet-pulp samples is done by decanting, siphoning, or filtering, final drying in any case being by evaporation. Suitable flocculating agents may be used to settle solids before decanting or siphoning. (See Sec. 15, Art. 3.) Pressure, vacuum, or gravity filters are used. Where the amount of sample for a definite period is large, a series of small settling tanks may be used, arranged so that each succeeding one takes overflow from the preceding, overflow from the last being clear. Final dewatering of material remaining in the tanks is done by evaporation, preceded, if necessary, by filtration. Dewatering before evaporation must not be practiced, if metals are in solution, unless separate solution assays and moisture determinations are made. Great care must also be required of operators in decanting and siphoning to prevent slime losses.

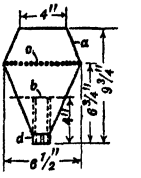

FIG. 68. Rotor for moisture-sample dewaterer.

Moisture-sample dewaterer shown in Fig. 68 was designed for use with the wash iron ores of the Mesabi Range (*140 *6 J 56*). It comprises a conical centrifugal rotor *a* with a conical sample container of the form shown. A false bottom *b*, consisting of a solid metal disk, is welded into the lower cone, and 1/8-in. holes *c*, spaced 1/4 in. apart, are drilled around the periphery. Sleeve *d* fits over a 1-in. shaft flexibly connected to the shaft of a vertical 1/2-hp., 1,725-r.p.m. motor controlled by a time switch. A rectangular housing with an upsloping pyramidal bottom cut out for the lower cone surrounds the rotor and leads extruded water to a drain. The sample is crushed to 1/4-in., riffled to 1 kg. and centrifuged for 7 min. Water expulsion is 95% complete in 1 min., 99% in 2 min. Little ore is lost.

Maximum temperature at which drying is done varies in different plants reporting from 132° F. to 450° F. Temperatures around 200° to 220° F. are most generally used. Ordinarily it is best not to use temperatures above 212° F. on account of danger of loss. This is especially true with easily oxidized sulphide ores which may lose sulphur on heating, or with minerals containing water of crystallization. In some cases temperatures even lower than 212° F. may be necessary, as in the case of certain clays in which water of crystallization is driven off before all hygroscopic moisture has evaporated. For air-drying samples for moisture determination the U. S. Bureau of Mines uses a temperature of 35° C. (95° F.).

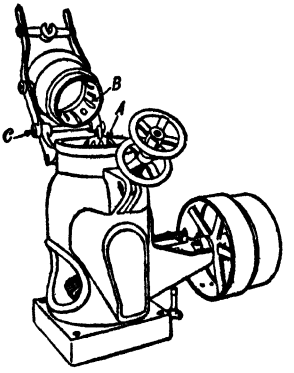

FIG. 69. Engelbach grinder.

Test for completion of drying may be made by holding a cool, dry watch glass or plate over the sample. Absence of condensed vapor on the glass indicates that the sample is dry. Stirring a hot sample with a spatula gives an indication of the presence of moisture by the vapor which rises. The most accurate test is to weigh until no further loss in weight takes place on further heating.

Crushing samples. Small jaw crushers are best for crushing material from 1- or 2-in. maximum down to about 0.5-in. Either the Blake or Dodge type is satisfactory. Small gyratory crushers may be used. Intermediate grinding is generally done in a COFFEE MILL (Engelbach; Fig. 69) in which grinding is done between a rotating cone *A* mounted on a vertical, gear-driven spindle and stationary circular concaves *B* attached to the machine. The grinder is arranged so that the top part, containing the concaves, may be lifted on hinges *C* allowing access for cleaning and repairs. The following sizes may be obtained:

Capacity lb. per hr.	From	To	R.p.m.	Power required, hp.	Approx. weight, lb.
200	0.5-in.	10-m.	225	4	850
100	0.375-in.	10-m.	250	3	550

Fine grinding of samples is best performed in DISK GRINDERS of either the Braun (Fig. 70) or McCool type.

Braun pulverizer. The ore is ground between two disks, one revolving (*a*) and the other stationary (*b*); fineness of product is determined by adjustment of screw *c*. The revolving disk is mounted on a horizontal shaft equipped with tight and loose pulleys *d*. Material is fed through hopper *e* and enters the space between the disks at the center whence it is fed by gravity and centrifugal force to the periphery and there ground. Ground material passes between the disks and is discharged into a removable tray *f* beneath. Removable cover *g* and the hinged stationary disk permit easy access to the grinding parts for cleaning. Feed may be 1/4-in. size. The principal dimensions are: length, 23 in.; width, 14 in.; weight, 235 lb., 850 r.p.m.; 1 hp. One set of grinding disks should handle from 2,500 to 7,500 ordinary ore samples. They are readily replaced.

McCool pulverizer is a similar machine except that slow relative motion of the disk centers is superimposed on rotation, which is supposed to accent the rubbing motion between the disks. The machine is made in two sizes, the larger rated at 1 lb., the smaller at 0.5 lb. to 100-m. in 30 sec.

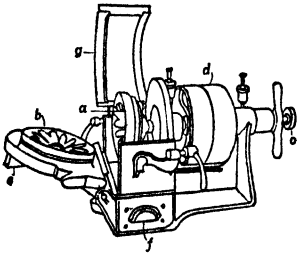

FIG. 70. Braun disk pulverizer.

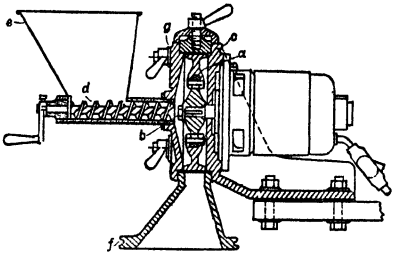

FIG. 71. Laboratory hammer mill (*Raymond Pulverizer Co.*).

Hammer mill (Fig. 71). Ore is broken by impact with hammers (*a*) mounted on a horizontal shaft *b* making 10,000 r.p.m. This mechanism is enclosed in a cylindrical chamber *c*, lined at the bottom with a screen; a hand-operated screw conveyor *d* provides controlled transport of feed from hopper *e* to mill. Screen undersize drops through an air-filter cloth tube attached to *f* into a suitable sample container. Removable cover *g* permits easy access to mill for cleaning and changing of screen. Stainless-steel screens with circular apertures of 0.024-, 1/16-, 1/8-, and 1/4-in. diameter are provided; a fine screen with rectangular aperture 0.010×15/32-in. is also available. Applicability is limited to soft, friable materials.

Bucking board consists of a flat cast-iron plate with finished surface on which ore is pulverized by means of a cast-iron muller on a wooden handle. The operation is usually manual, but mechanical drive may be used, if desired. Bucking boards are not as efficient or quick as disk grinders but furnish suitable means for grinding in places where power and more elaborate equipment are not available or for grinding very small quantities of material that might be lost in a mechanical grinder.

Grinding surfaces should be of material that is not so hard that it becomes polished, with consequent reduction in efficiency, nor so soft that the value of the sample is affected by admixture of fragments from the surfaces. If the surfaces are very soft, pieces of valuable mineral may be taken up, thus not only reducing the metal content of the sample being ground, but possibly salting succeeding samples. Grinding surfaces developing small holes or cavities should be avoided and discarded. Filling such holes with soft metal should not be practiced. Iron introduced into a sample by grinding can be removed with a magnet, if objectionable.

Fineness of sample required for assay varies with the character of ore. Since the actual material assayed must be cut out of the assay sample, the maximum size of grain must bear the same relation to the weight of the sample cut as at any other step in the sampling operation. Further, where a wet method of assay is employed, grinding must expose all of the valuable mineral to the action of the solvent. Usually a large factor of safety is allowed in the final sample and no sample for assay is coarser than will pass 65-m.; many plants pass the final sample through 100-, 150-, or 200-m. before delivering to the assayer.

Procedure in final grinding is to pass the sample through the grinder and separate undersize through a screen of the desired aperture. Oversize is returned to the grinder and the operation repeated until all passes the screen. Iron washers or stiff brushes are frequently used to aid in pushing material through the screen. Time is thus saved but washers cause wear on screen wires and in case of ores containing fine elongated pieces of valuable metal or mineral a piece may be forced through the screen that will have a serious effect on the value of the sample. With ores containing metallics it is often found impossible to pass the last flat metallic pieces through the screen, even on repeated grinding. In such cases the final oversize of metallic pieces is collected, weighed, and assayed separately, and its value is allotted in proportion to its weight and the weight of the sample. The screens used should be perfect.

Cutting down samples. See Figs. 8 to 13, 17, 24, 25, and accompanying text.

Mixing is essential before dividing a sample or weighing out for assay. Simple methods are usually employed: (*a*) coning; (*b*) turning over and over with a spatula; (*c*) rolling

on a piece of glazed paper, rubber or oilcloth. Rolling is accomplished by drawing the corners of the paper or cloth horizontally toward diagonally opposite corners, causing the sample to roll over and over on itself. If the corner is lifted instead of drawn horizontally, the sample merely slides along the surface of the cloth and no mixing occurs. (*d*) ANACONDA MIXER, consisting of a cubical box rotating on a horizontal axis forming a diagonal of the box, makes an efficient mechanical mixer for small samples; (*e*) JONES RIFFLE may be used for mixing finely ground material, the two portions obtained being united and passed through again and again.

Final division of ground samples into small parcels for assay may be effected by riffles or machines as described above, or by one of the following methods: (*a*) Coning and quartering. (*b*) Spreading and taking small portions with a spatula from points scattered at random over the surface of material, taking care that the spatula tip goes down to the bottom of the pulp layer each time. (*c*) Pouring into bottles from a rolling cloth or scoop after mixing, using a bottle-filling device comprising a trough compartmented transversely into, say, four compartments, with corresponding delivery spouts fitting into wide-mouthed bottles. (*d*) Mechanical dividers of various types, usually diminutives of apparatus already described. (*e*) A method including mixing and dividing, successfully used on COBALT silver ores (*17 CMI 199*) is as follows:

The finely ground sample (<100-m.) is sifted several times through a 40-m. screen onto a glass table, the screen being held about 2 in. above the material on the table. The pile is kept spread with a spatula. The glass table is marked off radially from a center into 16 equal sectors, and the material sifted is centered. After the final sifting the material is divided along radial lines. Material from alternate sectors is placed in separate packets, thus giving eight samples for such disposition as is desired. The balance of the material is rejected.

8. COST OF SAMPLING

Information on costs is limited and of such character that averages are of little value. Costs vary with the character and value of ore, nature of the operation, location of plant, cost of labor, tonnage sampled, and whether ores are purchased or not, the desired size of the reject, etc. Custom sampling costs from 15 or 20¢ to 75¢ or $1 per ton according to the efficiency of the plant, the daily tonnage, and the character of the ore. Charges are, of course, higher (see Sec. 2, Art. 50). Table 24 gives costs and other available pertinent data for a number of mills.

Table 24. Costs of sampling at milling plants

Mill	Location	Ore	Date	Tonnage per day	Sampling costs, $ per ton	% of milling costs
Mount Isa	Australia	Pb-Zn	1939	*e*	0.013	1.4
Morenci	Ariz.	Cu	1931	5,000	0.015–0.014 *a*	2.6–2.7
Old Dominion	Ariz.	Cu	1931	1,500	0.044 *a*	6.3
Utah Copper, Arthur and Magna mills	Utah	Cu	1931	30,000	0.00417 *a*	1.38
Kirkland Lake Gold Mines	Ont.	Au	1931	142	0.0165 *a*	1.2
Engels	Calif.	Cu	1931	1,000	0.0117 *a*	1.8
Page	Idaho	Pb-Zn	1932	300	0.005 *b*	0.6
Golden Cycle	Colo.	Au	1933	1,000	0.139 *c*	6.28
Pecos	N. Mex.	Pb-Zn-Cu-Au-Ag	1932	600	0.0205 *d*	1.9

a Sampling plus assaying.
b 60% of this cost chargeable to labor.
c Operating labor, 0.0576; maintenance labor, 0.0059; supplies, 0.0185; power, 0.0099.
d 0.0124 labor, 0.0022 supplies, and 0.0059 power.
e 2,650 t.p.d. for mixed oxide-sulphide ores, 1,880 t.p.d. for straight sulphide ores.

TESTING

Laboratory testing in connection with ores and industrial minerals has always one of two ends in view, *viz.*, (*a*) determination of the nature and/or behavior of material, or (*b*), determination of the character and/or action of a machine or process.

Tests on the nature of a material have to do either with inherent properties, *e.g.*, identity, specific gravity, magnetic permeability or solubility; or with accidental or ephemeral

properties such as size or surface character. Tests of behavior are ordinarily directed toward determination of movement under given conditions, *e.g.*, sedimentation rates or inertial movements in particular apparatus; or toward chemical behavior in special environments.

Tests of apparatus and processes may be directed simply toward determination of the behavior of a given material in a given machine or process, or may deal more generally with the fundamentals of action of the method or apparatus.

Methods of testing are almost as diverse as the materials, processes, and apparatus tested, but they may be classified into two main groups with a relatively small number of sub-groups as follows:

I. *Tests for nature of material.* (*a*) Optical, using the microscope, camera, and special means of illumination. Use of short-wave energy apparatus, such as the X-ray and electron microscope, is beginning in the ore-dressing field, but apparatus and techniques are not yet sufficiently simplified to justify inclusion of such apparatus in other than a few research laboratories where the services of skilled technicians in these fields are available. (*b*) Chemical and electrical. (*c*) Resistance to comminution. (*d*) Sizing. (*e*) Gravitational.

II. *Tests of machines and processes.* (*a*) Behavior of a given material subjected to a given process or machine. (*b*) Effects of variations in operation of a machine or process on its performance. (*c*) Nature of a process, *i.e.*, the way it utilizes fundamental physical and/or chemical phenomena.

9. OPTICAL TESTING

Introduction. Optical methods of testing provide means for (*a*) extending the range of vision of small particles and fine structures to sizes of the order of 0.1-μ (the electron microscope goes to 0.001-μ and the X-ray to atomic dimensions); and (*b*) speeding up visual perception to the point at which motion at velocities of 36 mi. per min. at a distance of 12 in. from the camera lens (12-in. focal length) can be stopped satisfactorily, or slowed down to an extent that permits normal visual observation and comprehension.

Microscopes

Utility of the microscope in an ore-dressing laboratory is tremendous; no laboratory that makes any pretense to thorough ore-testing or process research can get along without three or four different types; detail as small as 0.0000005 cm. is rendered visible by an electron microscope, and as fine as 0.00002 cm. with a compound microscope, whereas the unaided eye can only distinguish detail coarser than 0.01 cm.

Essential elements of the compound microscope are: (*1*) the CONDENSER, which collects and concentrates light upon the object under observation; (*2*) the OBJECTIVE, which receives light from the object and compounds therefrom a primary enlarged image of the object; and (*3*) the OCULAR (eyepiece), which forms a secondary enlarged image of the primary image.

Types of microscopes may be classified according to the interaction of the light with the object as (*a*) TRANSMITTING TYPES, used for examination of transparent objects, and (*b*) REFLECTING TYPES, used for opaque objects. Each type has two sub-types according as the light used is ordinary (for examination of isotropic and anisotropic materials) or polarized (for anisotropic materials). Standard equipment in an ore-dressing laboratory should include at least: a Greenough binocular, a biological or research instrument, a metallurgical miscroscope, and a petrographic microscope. Instruments of these types may be purchased from any of the manufacturers of such equipment. (Bausch & Lomb Optical Co.; E. Leitz, Inc.; Pfaltz & Bauer, Inc.; C. Reichert Optical Works; Spencer Lens Co.; Carl Zeiss.) The descriptions of instruments and procedures that follow are limited, particularly with respect to optical accessories. As the operator becomes proficient in the basic uses of a particular instrument, he should consult the manufacturers' catalogues and the literature of microscopy to acquaint himself with the available accessories and variants of procedure which enhance the utility of the instrument.

Selected bibliography of microscopic theory and practice: E. Spitta, *Microscopy*, John Murray, London, 1920; C. Beck, *The Microscope*, 2 vols., R. & J. Beck, Ltd., London, 1924; J. Belling, *Use of the Microscope*, McGraw-Hill Book Co., 1930.

Binocular microscope (Greenough type) is a compound microscope of relatively low total magnification, useful for both transmitted and reflected work; it is the usual first step in magnification beyond the pocket lens. It is characterized by the stereoscopic image obtained by the use of two objectives slightly inclined to each other.

Stand (usual form) comprises horseshoe base *A* (Fig. 72, item *a*) carrying tiltable platform *B* on axis *C*, fixed in any desired position by tightening nut *D*. Stage *E*, fastened to *B* by screws *F*, carries pillar *H*, which is grooved to receive arm *J*, and is equipped with a pinion, actuated by pinion heads *I*, which engage rack *K*. Arm *J* carries a revolving-drum nosepiece *L*.

Stage E is equipped with a removable glass insert *M* (used for transmitted work), and a removable metal plate, white on one side, black on the reverse (used to get contrast in reflected work). Clips *N* hold objects in position. Arm rests *G* (optional) serve to steady hands while working.

Stand shown in item *b* is useful for examination of parts of large objects.

Optics comprise (*a*) mirror *O* (plane one side, concave the other), which receives light from the illuminant and directs a parallel or convergent beam upward through *M*; (*b*) paired parfocal objectives *P*, mounted on *L*, with COMPONENT MAGNIFICATIONS (magnification of primary image) of 0.39×, 0.7×, 1.5×, 2.0×, 3.0×, 4.0×, and 7.5×, so designed that when the instrument is focused on object and another objective is swung into place no change of focus occurs; (*c*) paired oculars *Q* (one with a correction collar *S*), mounted in body tubes *R*, adjustable as to interpupillary distance so that a single

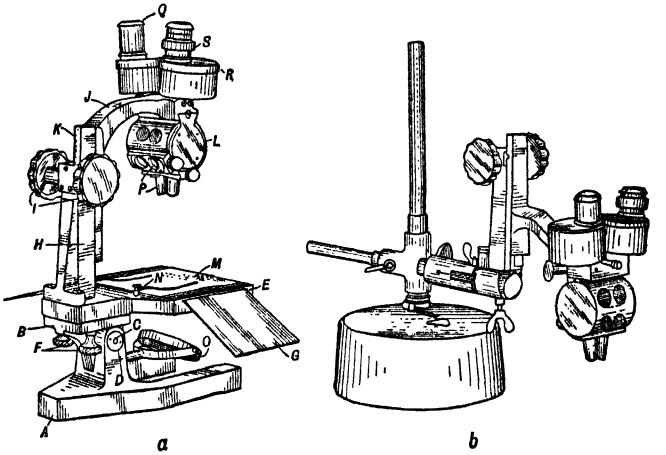

FIG. 72. Greenough binocular microscope (*Bausch & Lomb*).

image may be seen by different observers. OCULAR COMPONENT MAGNIFICATIONS (additional magnification imposed on primary image when secondary image is formed by ocular) are 10×, 15×, and 20×. Oculars have a large field of view, high EYEPOINT (point at which eye must be placed to view image), and good definition to the edge of the field.

Operation for transmitted work. (*a*) Place transparent object, mounted or unmounted, on stage glass. (*b*) Adjust light source so that its rays fall on mirror. (*c*) Turn mirror to direct light onto object. (*d*) Turn low-power objective into view position and rack objective down to within 1/2 in. of high point of object. (*e*) Rotate body tubes to suit interpupillary distance. (*f*) Rack objective upward until image is seen (rough focus). (*g*) Adjust interpupillary distance (if necessary) so that a single image is seen. (*h*) Sharpen focus and adjust mirror until field appears uniformly illuminated.

Operation for reflected work. (*a*) Place object on metal insert, using side producing maximum contrast. (*b*) Arrange illuminant to cast beam directly on object. (*c*) Proceed as in *d*, *e*, *f*, and *g* for transmitted work. (*d*) Sharpen focus. (*e*) Adjust illumination (or orientation) to give required contrast and to cast shadows in desired direction. For FLAT LIGHTING (producing no shadows) see Fig. 80, item *b*. Oblique lighting with shadow detail is obtained by opposing principal illuminant by another light source directed toward the shadow side of the object; the distance of the secondary source from the object determines the amount of shadow detail.

Balancing the optical system. (*a*) Focus on an object and adjust interpupillary distance. (*b*) Place a shield over the ocular with correction collar *S* (Fig. 72), and sharpen focus by use of pinion heads *I*. (*c*) Transfer shield to other ocular and sharpen focus by rotating correction collar.

Troubles. If operator is unable to see a single image, assuming proper adjustment of interpupillary distance, the eyes may be assisted to accommodate by viewing intently any object held at a distance of 10 in. therefrom, then quickly applying eyes to oculars without changing the eye focus. Dust spots that rotate when the oculars are rotated are on the oculars, otherwise on the objective or body tube. Remedy is to clean the offending member (see p. 77). If cleaning of external surfaces does not remove the source of trouble, the ocular may be disassembled and the elements cleaned, but the body tube and objectives should be cleaned only by a professional optician.

Utility of the binocular microscope lies in the three-dimensional image yielded; it is limited by the relatively low TOTAL MAGNIFICATION (ocular component magnification × component magnification of objective) and low resolving power (see p. 74). It is most frequently used in examination of hand specimens, mineral fragments, products of concentration processes, filter cloth and cake, processes in operation, etc.

Research microscope for transmitted work is a compound microscope capable of total magnifications ranging from about 50× to 2,000×; it is characterized by great flexibility and range in the system of illumination. Its particular field is in examination of liquid-solid mixtures.

Stand (Fig. 73, item *a*) consists of limb *A* tiltably mounted on foot *B*, and carrying body tube *D*, illuminating apparatus *E*, and stage *F*. Coarse focusing is done by milled heads *H*, position may be clamped by lever *J*; fine focus is by *G*. The body tube is clamped to block *I* by lever *K*; it is provided with revolving nosepiece *L*, which carries three (or four) objectives *M*, and either the inclined binoculars *N* or an erect or inclined monocular.

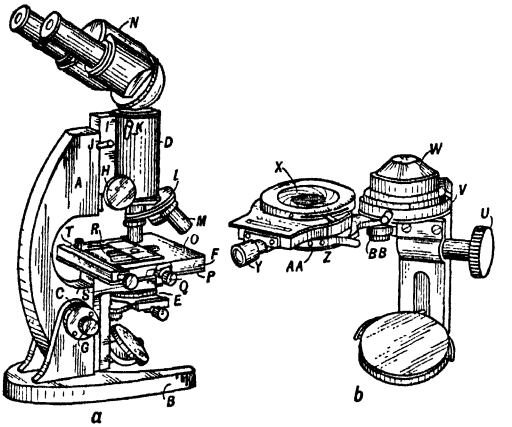

FIG. 73. Research microscope (*Zeiss*).

Stage plate *O* is moved backward and forward (50-mm. range) by pinion head *Q*. Grooved slide *R* is moved laterally (75-mm. range) by pinion head *S*; it carries two fingers *T* for holding specimens.

Illuminating apparatus (item *b*) is provided with a rack and pinion *U* for focusing the illuminating beam. Sleeve *V* holds condenser *W*. Iris diaphragm *X* is movable horizontally by rack-and-pinion movement actuated by *Y*; it is rotatable on base *AA*, and swings in and out on pin *BB*; aperture is controlled by lever *Z*; a shoulder immediately below the leaves supports filter disks (if desired).

Optics of the compound microscope consist of the objective, ocular, condenser, and aperture diaphragm.

Objectives are classified, according to the extent of the optical defects of the lens system, as achromatic, fluorite, and apochromatic objectives; the principal optical defects being spherical and chromatic aberrations. SPHERICAL ABERRATION is due to noncoincidence of the foci of rays passing through the marginal and central elements of the lens; CHROMATIC ABERRATION is due to the noncoincidence of the foci of the differently colored rays produced when white light passes through the marginal elements. ACHROMATIC OBJECTIVES are corrected for two colors in chromatic aberration and one color (olive-green) in spherical aberration. APOCHROMATIC OBJECTIVES are corrected for three colors in chromatic aberration and two colors in spherical aberration. Fluorite (SEMIAPOCHROMATIC) objectives are corrected to an intermediate degree.

Numerical aperture (N.A.) of an objective is a measure of its light-gathering power; N.A. $= \mu \sin \theta$ where μ = refractive index of the medium intervening between object and objective and θ = one-half of the angle subtended by the front lens of objective at the object. Objectives ranging in numerical aperture from about 0.15 to 1.60 are available. Objectives with numerical apertures up to 1.00 are used with air as the intervening medium and are known as DRY OBJECTIVES. IMMERSION OBJECTIVES (N.A. $\geq$ 1.00) require the use of a fluid between object and objective; water for white light for N.A. = 1.25; glycerine (used for ultraviolet light) for N.A. = 1.25; cedarwood oil for N.A. 1.00~1.42, and α-monobromonaphthalene for N.A. = 1.60.

Resolving power of an objective, measured by the distance x between two points of the object which are just separated as two distinct points in the image, depends upon the N.A. of the objective, the wave length λ of the light employed, and upon the method of illumination, *i.e.*, $x = \lambda/\text{N.A.}$ for axial illumination and $x = \lambda/2$ N.A. for oblique illumination.

Depth of focus of an objective is that distance perpendicular to the object plane throughout which all object details appear in sharp focus in the image. Depth of focus $D = R\mu/M$ N.A. where M = magnification of the objective, and R is the limit of resolution of the eye (0.01 cm.).

Cover-glass thickness to be used with a particular objective depends upon the design of the objective and differs for the products of the different manufacturers (Bausch & Lomb, 0.18 mm.; Leitz, 0.17 mm.; Spencer, 0.18 mm.; Zeiss, 0.17 mm.). Use of cover glasses of thickness other than that recommended introduces spherical aberration in the image. With cedarwood oil as the immersion medium, close adherence to recommended thickness is not too important (provided ample working distance exists), since the oil and glass form an optically homogeneous stratum between object and objective. With objectives of low numerical aperture ($\leq$0.30), cover glass thickness may vary within wide limits (cover glass may even be omitted) without appreciably affecting quality of the image. Some objectives are equipped with a correction collar graduated in millimeters of cover-glass thickness. For an unknown cover-glass thickness, the correction collar is properly adjusted when the image goes out of focus at the same rate at which it comes into focus. When objectives with correction collars are not available, variations in cover-glass thickness may be compensated by changes in optical tube length (see below), decreasing tube length if cover glass is too thick, increasing if too thin.

Optical tube length (distance between back focus of objective and front focus of ocular) to be used with an objective varies with the manufacturer; Bausch & Lomb, Spencer, and Zeiss objectives require a tube length of 160-mm.; Leitz and Winkel-Zeiss use 170-mm. Optical tube length is determined by setting of mechanical tube length.

Oculars may be classified according to intended use; class names vary among the manufacturers. Huygenian eyepieces with component magnifications ranging between 4× and 15× are used with achromatic objectives of low N.A. (≤0.30 to 0.40). COMPENSATING OCULARS (3× to 30×) are designed to compensate the chromatic aberrations existing in the primary image of apochromatic objectives, hence must always be used therewith. Compensating eyepieces may also be used with the highest power achromatic and fluorite objectives. HYPERPLANE (Bausch & Lomb), ORTHOSCOPIC (Zeiss), and PLANOSCOPIC (Spencer) oculars (5× to 30×) are designed for use with high-power achromatic and fluorite objectives; they yield a flatter image plane than Huygenian oculars.

Condensers may be divided into two classes, (*A*) condensers used to produce axial (or oblique) illumination, and (*B*) condensers used to produce dark-field illumination. Many condensers for axial illumination are available; the better known and most widely used are (*a*) concave mirror, (*b*) Abbe (least corrected optically), (*c*) achromatic (corrected for two colors in chromatic and spherical aberrations), and (*d*) aplanatic (intermediate optical correction). The better known dark-field condensers are the paraboloid and the cardioid.

Numerical aperture of condensers is defined and dependent upon the same quantities as for objectives (see p. 74); the refractive index here refers to the medium intervening between the condenser and the object slide (SLIP). Condenser apertures range between 0.3 and 1.40. Axial-illumination condensers are so constructed that by unscrewing the top element (or elements) the N.A. is reduced. When used at aperture >1.00 the condenser should be oiled to the slide. APERTURE DIAPHRAGM provides means for controlling the N.A. of axial-illumination condensers and for producing oblique illumination.

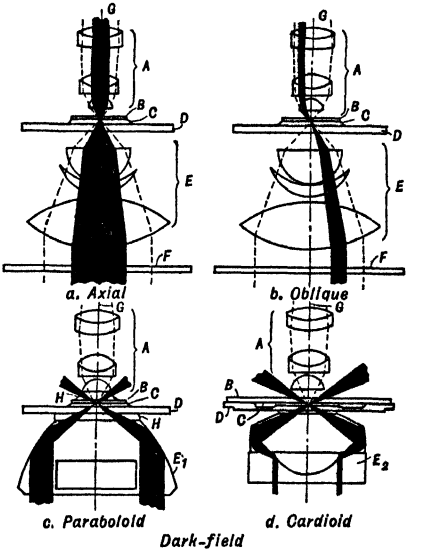

A Objective. *B* Cover glass. *C* Object. *D* Slide. *E* Condenser. E_1 Paraboloid condenser. E_2 Cardioid condenser. *F* Aperture diaphragm. *G* Optic axis. *H* Immersion medium.

FIG. 74. Types of illumination.

Types of illumination attainable with the research microscope are: (*a*) axial, (*b*) oblique, and (*c*) dark-field.

Axial illumination (Fig. 74, item *a*) is characterized by symmetrical disposition of illuminating rays about the optical axis *G*, and is obtained by placing the center of *F* on the optical axis. It differs from dark-field illumination in that the illuminating rays enter the objective. It images plane object areas perpendicular to the instrument axis white, while such areas making an angle <90° with the axis appear shaded; consequently details in inclined areas tend to be obscured. The outline of the object is rendered sharply provided there is a sufficient difference between the indices of refraction of the object and surrounding medium. This type of illumination is used for general purposes with transparent materials, *e.g.*, examination of size, shape, color, etc., of transparent mineral fragments, and examination of thin sections.

Oblique illumination (Fig. 74, item *b*) is obtained by displacing the aperture diaphragm from a position of symmetricality, and is characterized by unsymmetrical disposition of the illuminating rays. It should be noted that every sector of the objective receives light (after interaction with object) even though object is illuminated from one side only. Such illumination produces shadows in the image, which give the image a third-dimensional effect that greatly simplifies recognition of geometric shape; it does for the axial image what relief does for a contour map. Examination of crystalline reaction products in chemical microscopy is an excellent illustration of its use.

Dark-field illumination (Fig. 74, items *c* and *d*) is characterized by nonentry of illuminating rays into the objective. Dark-field illumination images plane object areas perpen-

dicular to the axis black; areas otherwise inclined appear illuminated. The resolving power of the instrument is doubled with this type of illumination; hence it separates structure details not resolvable by axial illumination. It is used to examine details in inclined areas such as the sides of pits and protrusions in transparent materials; it has wide use in examination of suspensions of fine particles.

Adjustment for axial illumination differs depending upon whether the primary or some secondary light source (such as the light condenser) is imaged in the plane of the object (Fig. 75). Both methods seek to fulfill the conditions of critical illumination, *viz.*,

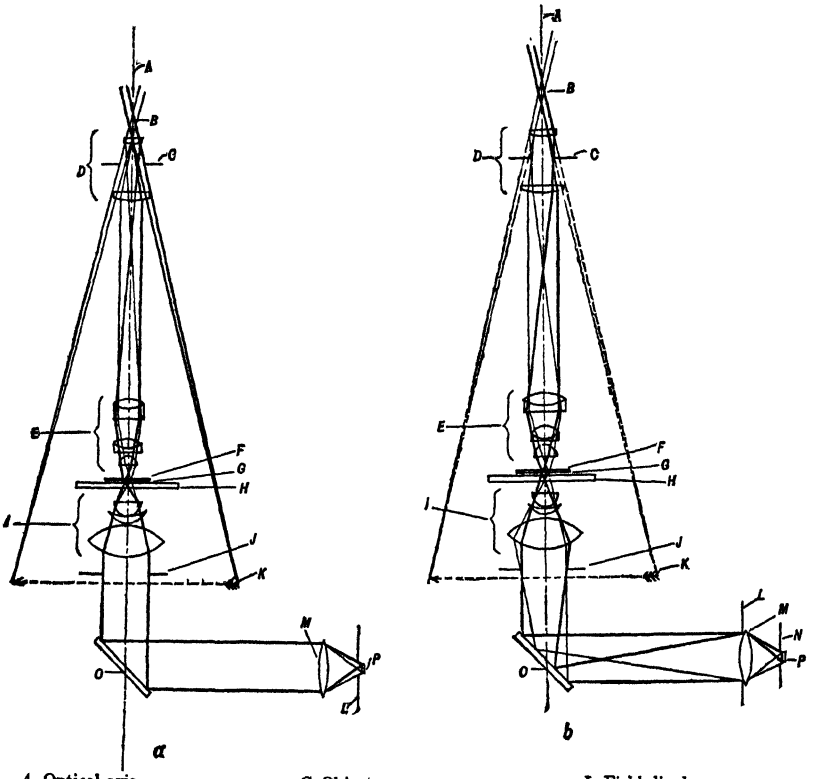

A Optical axis.
B Eyepoint.
C Ocular-field diaphragm.
D Ocular.
E Objective.
F Cover glass.
G Object.
H Slide.
I Condenser.
J Substage aperture diaphragm.
K Virtual image.
L Field diaphragm.
M Light condenser.
N Light source aperture diaphragm.
O Mirror.
P Light source.

FIG. 75. Critical illumination.

(*a*) attainment of illuminating rays symmetrically disposed about the optical axis and capable of entirely filling the area of the back lens of the object without exceeding this area, (*b*) uniform illumination of object limited to the area under view. The means for limiting the area illuminated is a field diaphragm *L*, which is placed as close to the light source *P* as is physically possible, so that it forms an image in the object plane *G* when *P* is imaged therein. The first method (item *a*) is applicable only when the light source contains a uniformly radiating element (ribbon-filament lamp or the like). In this case, the light condenser *M* is so situated as to produce a parallel beam of light (*P* at principal focus of *M*). When *M* is used as the secondary source of light (item *b*), *L* is located immediately in front of it, and *P* is placed beyond the principal focus of *L* so as to produce a convergent beam of light which comes to a focus in the aperture diaphragm *J*.

To image primary light source *P* in object plane *G* (Fig. 75, item *a*): (1) Mount object on slide using a cover glass of proper thickness (if high dry objectives are to be used) and place the prepared slide *H*

in position on stage. (2) Adjust tube length to manufacturer's recommended figure. (3) Open *J* to maximum aperture and locate it centrally by means of pinion head *Y*, Fig. 73, using scale on diaphragm mount. (4) Open *L* to maximum aperture. (5) Illuminate *plane* surface of mirror *O* with parallel beam produced by *M* and adjust *O* until object appears illuminated when viewed from side. (6) By means of coarse-focus pinion head lower objective until it almost touches object. (7) Apply eyes to oculars and rack objective upward until it appears in focus. Sharpen focus, using fine adjustment. (8) Place a piece of tinted glass over ocular, partly close *L* and focus image of *L* by racking condenser up and down by means of pinion head *U*, Fig. 73. (9) Center image of *L* with respect to circular outline of field by means of *O;* open *L* until it just disappears from field of view. (10) Remove ocular and view image of *J* in back lens of objective, center this image by means of pinion head *Y*, Fig. 73. (11) Close *J* until two-thirds of the area of the back lens is illuminated. (12) Replace ocular and focus with fine adjustment.

To image light condenser *M* (Fig. 75, item *b*) in object plane, repeat steps 1 to 4 inclusive of preceding method, then illuminate *O* with convergent beam and adjust *O* to illuminate object. Continue with steps 6 and 7, then focus image of light source on piece of paper held in plane of *J* by moving *M* back and forth. Continue with steps 8 through 12. When back lens of objective is viewed, an image of the primary light source should be seen.

Adjustment for oblique illumination depends upon the number of images of the aperture diaphragm that are formed in the back lens of the objective when this diaphragm is reduced in aperture and displaced from its central position.

The first step is to obtain critical axial illumination, using either of the methods described. Remove ocular, observe image of aperture diaphragm in back lens of objective as diaphragm is gradually closed; displace diaphragm to extreme position (using pinion head *Y*, Fig. 73) and rotate diaphragm in mount through 180°. If one, and only one, image of the diaphragm is seen, the adjustments for oblique illumination are largely a matter of trial and error. The operator should be guided by the following prohibitions, optical in nature: The aperture diaphragm should not be closed so far that the outlines of structural details become thick lines or that contour halos appear. The aperture diaphragm should not be displaced from its central position by an amount more than sufficient to produce a slight shading of the image.

If more than one image of the aperture diaphragm is seen, the extra, fainter diffraction images, occurring in pairs, are symmetrically situated with respect to the bright central image. Each pair of diffraction images is associated with a repeated linear structure of the object, the structure being oriented at right angles to the line of centers of the diffraction images. The closer the spacing of the structure, the farther apart are the diffraction images; in some cases the diffraction images are seen only when diaphragm is displaced from its central position. Spacing of diffraction images is affected also by the wave length of light used, increasing as the wave length decreases. The principle followed in obtaining oblique illumination is to shift the aperture diaphragm from its central position until back lens of objective contains in addition to the central image as many of the diffraction images as possible (one member of each pair). The aperture diaphragm is then opened (viewing image with ocular in place) to maximum aperture possible without loss of resolution.

Adjustment for dark-field illumination. (1) Select a dark-field slide (special slides provided by manufacturers) free of scratches; clean thoroughly, dry, and free slide of all dust particles. (2) Make a wet mount of object and cover with a thin, clean cover glass; place slide on stage. (3) Adjust tube length to manufacturer's figure. (4) Open field and aperture diaphragms (*L* and *J*, Fig. 75). (5) Place objective into nosepiece; any objective with N.A. < 1.00 may be used; if an objective of higher N.A. is used, it must be equipped with an iris diaphragm which is closed to exclude all illuminating rays or with a funnel (accomplishing the same result) inserted over the back lens of the objective. Specially designed objectives are used when specially designed mounting equipment (such as quartz slide and cover glass of Bausch & Lomb Co.) is used. (6) Illuminate plane surface of mirror with light from source (preferably arc light) made parallel by moving light condenser. (7) Adjust mirror so that light falls perpendicularly on the under side of the stage condenser; this is done by observing a reflected disk of light which moves about near the *light* condenser as the mirror is tilted; adjustment is correct when this spot disappears into the center of the light condenser. (8) Place a drop of water or glycerine on the top lens of the stage condenser; raise condenser until liquid wets under side of slide. (9) Using a low-power objective, focus on object. (10) Raise or lower condenser until the smallest spot of light is secured. (11) If spot of light is off center, adjust centering screws of condenser until spot is concentric with field of view. (12) Swing higher-power objective into viewing position and focus with fine adjustment.

Troubles in use are many and varied; the following is a limited survey of those more common:

1. Indistinctness of image or loss of light is usually due to soiled or coated surfaces in ocular or objective; locate by rotating eyepiece (see p. 73). Clean optical parts as follows: (*a*) blow surface clean, using rubber-bulb blower; (*b*) breathe upon surfaces and wipe dry with lens paper, using circular motion; (*c*) clean surface, using lens paper moistened with xylol; and (*d*) breathe on surface, wait for condensate to evaporate and blow surface clean.

2. Extreme brightness of image (to the point where eyes lose sensitivity) is due to intensity of illuminant. Intensity is decreased by the insertion of daylight-tint disks (polished on both sides) into aperture-diaphragm mount. Do not control light intensity by stopping down the aperture diaphragm.

3. Thin, barely visible outlines of structural details may be due to high intensity of illumination, use of excessively large opening in aperture diaphragm, or to the use of a mounting medium whose

refractive index closely approximates index of object. The first cause is removed as in (2); the second, by proper adjustment of aperture diaphragm; and the third, by preparing a new slide, using a different mounting medium.

4. Thick, broad outlines of details accompanied by general murkiness of field is probably due to low N.A. of condenser. If N.A. of condenser has been controlled by diaphragm, open until two-thirds of the area of the back lens of objective is illuminated; otherwise replace condenser with one of higher aperture (if top element of condenser had been removed, replace it).

5. Nonuniform illumination of image may be due to noncentering of condenser or aperture diaphragm; if image of primary light source was formed in the object plane, it may be due to lack of uniform radiation over the surface of the actinic element or to noncentering of light image in the field of view. Condenser and aperture diaphragm are centered as described on pages 88 and 77 respectively. Light image is centered by centering image of field diaphragm (see p. 77) and/or centering light source relative to field diaphragm (see p. 88). If difficulty is due to radiating element, change light source.

6. Flares in the image may be due to use of an eyepiece unsuited to the objective, or to air bubbles in the immersion medium. In the latter case the glare spots are roughly circular in shape and move when the slide is moved. Removal of defect is achieved by cleaning objective, slide, and condenser, followed by renewal of immersion liquid.

7. Dark band either concentric with field of view or off center therewith may be due to improper adjustment of field diaphragm. Center diaphragm (p. 77) and open until it clears field of view; if the latter is impossible, reduce aperture of condenser by removing top element, and if this is insufficient, remove condenser and use concave surface of mirror.

8. Lack of sharp definition to edge of field may be due to optical quality of ocular or to use of cover glass of incorrect thickness. If ocular is known to possess good definition, correct for cover glass thickness (see p. 74).

9. Opalescent appearance of dark-field image is due to lack of cleanliness or poor quality of slide and/or cover glass.

10. Dark-field image contains an annular ring of light which cannot be removed by racking condenser up and down; this is due to use of a slide too thick for dark-field work.

Metallurgical microscope is a compound microscope designed for examination of opaque objects, the image being formed of the reflected rays only. It is capable of magnifications ranging from 30× to 2,000×. Its particular field is in examination of reasonably plane surfaces.

Stand is essentially the same as Fig. 73, differences being absence of substage apparatus (item *b*), and provision of a rack and pinion for vertical movement of the stage.

Vertical illuminator (Fig. 76) screws onto the lower end of the body tube *G*, in the position normally occupied by the objective. It comprises: (*a*) A reflecting glass plate and a total-reflecting prism, both mounted on bar *A;* movement of *A* along its axis places one or the other of these reflectors in the optical system. (*b*) A field diaphragm adjusted by *B*. (*c*) A condensing lens adjusted by *C*. The lower end of the housing is equipped with an objective clutch *D*, to hold objectives provided with suitable adapter collars *E*.

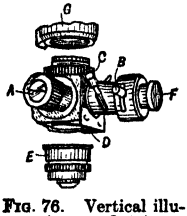

FIG. 76. Vertical illuminator (*Leitz*).

Objectives are special. They have short mounts to allow the reflecting surface of the illuminator to come as close as possible to the back lens of the objective, thus avoiding flare and loss of light; they are corrected for use without cover glass and are computed for a longer tube length, owing to interposition of the illuminator between ocular and objective (Bausch & Lomb, 215 mm.; Leitz, 215 mm.; Zeiss, 190 mm.). Achromatic, fluorite, and apochromatic types are available; numerical apertures range from 0.10 to 1.40. Objectives of N.A. > 1.00 are immersion types; they must be oiled to the object; others are used dry.

Oculars are same as those used with transmitted-type microscope (see p. 75).

Aperture diaphragm is located externally between light source and illuminator in such a position that it is imaged in the back lens of the objective.

Adjustment for axial illumination. (1) Place object on stage. (2) Adjust light source and light condenser so that rays enter window *F* of vertical illuminator (Fig. 76). (3) Open field and aperture diaphragm. (4) Adjust *A* so that glass plate is in reflecting position. (5) Focus on object by means of coarse-focus adjustment. (6) Close field diaphragm and focus an image thereof in plane of object by moving condenser handle *C* back and forth. (7) Center image of field diaphragm with respect to field of view by rotation of *A*. (8) Open field diaphragm until it just clears field of view. (9) Move light condenser until an image of its surface is formed in the object plane. This is best done by temporarily locating some opaque object at the surface of the light condenser, and moving condenser until an image of the object is formed in the object plane. (10) Remove ocular, view back lens of objective, and move light source until its image is formed in the back lens. (11) Close aperture diaphragm and move it along optical axis until an image of it is formed in the back lens of the objective. (12) Center aperture diaphragm by moving it in directions perpendicular to optical axis, then open diaphragm until two-thirds of the area of the back lens is illuminated. (If total reflecting prism is used, only a semicircular portion of the back lens is seen, and the aperture diaphragm is centered with respect to this semicircular field of view.) (13) Replace ocular and sharpen focus with fine adjustment. (14) Repeat steps 1 to 13 incl.

Adjustment for oblique illumination is obtained by first adjusting instrument to give critical axial illumination and then by proceeding as on p. 77

Troubles arise primarily from failure to obtain critical illumination. If field diaphragm is not open sufficiently, a sharp black outline appears about the field of view; if this diaphragm is improperly imaged in object plane, the outlines of this dark area are diffuse; if the diaphragm is decentered, the dark band intrudes on center of field of view. Lack of contrast in image may be due to excessive opening of field diaphragm. A decentered aperture diaphragm produces uneven illumination. If aperture diaphragm is too far open, thin, nearly invisible outlines result; if closed too far, thick outlines are produced accompanied by diffraction images. If image details and image of field diaphragm shift during focusing, the plane of the object is not perpendicular to the optical axis.

Dark-field vertical illuminator is used primarily when surface relief is to be resolved. It comprises: (*a*) An illuminating tube *A* (Fig. 77) containing two condensers so located that their principal foci coincide (or an illuminating tube *B* containing two condensers, and a light source placed at the principal focus of the lens combination). (*b*) A reflecting annular mirror *C* which receives a parallel beam of light from the illuminating tube and directs it into the condenser. (*c*) A ring condenser *D* carried by the objective holder *E*. (*d*) A slit *F* in the illumination tube for the insertion of diaphragms and/or filters in the path of the incoming light.

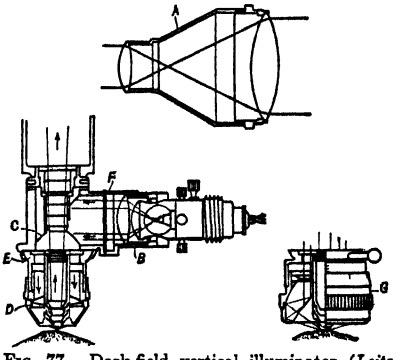

FIG. 77. Dark-field vertical illuminator (*Leitz Ultropak*).

Objectives available are: (*a*) Dry objectives, N.A. 0.12 to 0.65 and magnifications from 3.8 to 50×; (*b*) water-immersion objectives of N.A. from 0.55 to 1.0 and magnifications from 23× to 90×; and (*c*) oil-immersion objectives of N.A. from 0.25 to 1.0 and magnifications from 11× to 100×. These objectives are corrected for a tube length of 185-mm. and for use without a cover glass; the low-power and immersion objectives may be used with cover glasses without detriment to the image. The low-power (3.8× to 11×) objectives are each provided with a special ring condenser *G*, the high-power objectives (22× to 100×) are used in conjunction with a different ring condenser.

Oculars of Huygenian or periplanatic types (see p. 75) are used.

Adjustment of illumination. (1) Illuminate entrance condenser of illuminating tube with parallel light. (2) Remove all diaphragms or filters from slit, place a piece of white paper in object plane about 1 in. below illuminator housing (objective holder not in position). (3) Center light source (by movement at right angles to direction of rays) until the annular ring of light seen on paper is uniformly illuminated. (4) Place objective holder, together with objective and condenser, in position. (5) Adjust tube length to 185 mm. (6) Place object on stage and focus by moving stage toward or from objective (if portable light source is used coarse pinion head of body tube may be used for focusing). (7) Set ring condenser by rotation about mount to mean position recommended by manufacturer for the particular objective in use. (8) Displace ring condenser above and below mean position until field of view is evenly illuminated.

Depth of focus may be increased by the insertion of diaphragms (1.5- to 5-mm. openings) in the slit. Loss of definition accompanies the increase in depth of focus, hence judgment must be exercised.

Troubles in use, aside from those due to dirty optics, derive mainly from improper illumination. Uneven illumination of image may be due to decentralization of light source or improper location of ring condenser. Thin, barely visible image outlines may be due to high intensity of light source; remedy is to place a daylight filter in slit *F*. Thick image outlines may be due to use of a diaphragm with too small an opening.

Uses. The dependence of image illumination upon orientation of object planes (relative to the instrument axis) is the same as for transmitted work (see p. 75). Axial reflected illumination is used in the examination of polished sections of opaque materials, of opaque mineral fragments, process products (mounted or unmounted) such as concentrates, middlings, and tailings from flotation operations, etc. Oblique illumination is used primarily to increase contrast in the image of materials normally examined by axial illumination. Dark-field illumination is used in examination of pitted opaque surfaces, of slime-coated particles, of translucent minerals to produce internal reflections enabling identification, of transparent minerals to study inclusions, etc.

Mounting. Proper mounting and polishing of the specimen are important to image quality. If the specimen is unaltered by temperatures below 125° to 135° C., and by pressures below 3,000 to 4,000 lb. per sq. in., the usual procedure is to mount the specimen in either an opaque or transparent plastic. This mounting is done in machines especially designed (Buehler specimen-mount press).

The mold, 1- to 1 1/4-in. diameter, with seat in position, is charged with the specimen and with mounting powder, the ram is put into position, and the completed assembly, together with an electrically

heated jacket, is placed on the stage of a hydraulic press. The mold is heated to such a temperature and subjected to such pressure as is prescribed for the particular mounting powder used. Opaque plastic is usually red or black bakelite powder; an extra hard, translucent, amber-colored bakelite powder is also available; the transparent powder is LUCITE. If the specimen cannot withstand the pressures required by this method, as is the case with porous materials, place the sample in a suitable mold, such as a 1-in. round or square pill box, and cover with a sufficient amount of bakelite resinoid No. BR-0014. Cure at 75° C. for about 24 hr. or until the surface is gumlike and shows some resilience when dented with the finger. Next cure for 24 to 30 hours at 90° to 100° C., stopping while the blank, at oven temperature, can still be dented by the finger. Cool slowly to room temperature (Bird, *136 J 253*). Other methods of mounting are described by Head (*RI 2257; TP 10 UU; Bul 391 USBM 10*), Thomson (*8 Amer. Miner. 99; 19 CIMM 706, 1956*), Short (*21 Econ. Geol. 648*), and any of the standard texts on mineragraphy.

Specimen polishing has for its objects the attainment of a surface free of pits, scratches, undulations, and of relief between soft and hard minerals. The effect of pits and scratches is to distract attention, produce modifications of unknown amount in apparent color, hardness, and chemical behavior, and by removal of a component, to introduce an element of incompleteness and uncertainty in results. Undulations of the surface affect interpretation of the image by producing shadows and high lights of varying intensity. Relief puts hard and soft minerals in different planes, necessitating change of focus for examination; it also obscures the boundary between minerals, a site whose examination yields critical information in a large number of problems. Good specimen polishing has been most closely approached by abandoning use of the rolling abrasive for fixed abrasive. In fixed-abrasive methods (Vanderwill, *23 Econ. Geol. 292*) the abrasive is embedded in the surface of the lap, which is made of lead, lead-tin alloy, copper, or some other metal soft enough to hold the abrasive particles and still not yield under the action of the specimen. It is customary to have one such lap for each polishing stage, as this minimizes chances of getting particles of coarser abrasive into the lap in subsequent stages.

Specimen preparation consists in (*a*) cutting a specimen from a larger sample and shaping it, (*b*) grinding, to produce a flat, semipolished surface, and (*c*) polishing to produce a flat scratch-free mirrorlike surface. There are many manipulative difficulties. Successful technique involves cleanliness, care in handling the specimen, and patience. A particle of grit on the polishing lap may ruin an otherwise perfect specimen; rough contact with a hard surface, as by dropping, produces similar results; impatience during grinding usually results in coarse scratches which no amount of polishing will remove without introducing new defects.

Cutting and shaping are best done with a copper wheel rotated in a vertical plane at high speed, the lower segment of the wheel operating in a trough containing a pulp of commercial diamond dust or other suitable abrasive. The specimen may be hand hewn with chisel and anvil, but hewing may produce unseen cracks which appear in later stages. Dimensions of specimen vary, $1 \times 3/4 \times 3/4$ in. is usual. Final shaping may be done during coarse grinding.

Grinding is done with emery papers or with grinding laps. Grinding with papers usually starts with a paper of about 120 grit, and is followed by successively finer papers, Nos. 1, 0, 00, and 000. The paper is placed on a clean, flat, hard surface (plate glass) and the specimen gently drawn back and forth over the full length with moderate pressure. If the resulting slight curvature of the edges is objectionable, the specimen should be drawn across the paper in only one direction. In going from one paper to another, the specimen should be held in such position that the new, finer scratches are approximately at right angles to the old scratches; grinding on successive papers is continued each time until the previous scratches are completely removed.

Grinding laps are disks faced with a lead or 50–50 lead-tin alloy (*27 ASM 382*). The face of the lap has a spiral groove directed counter to the rotation. It is good practice to use a separate lap for each grinding stage, thus reducing carry-over of coarse abrasive from an earlier to a later grinding stage. Abrasives of increasing fineness, *i.e.*, Nos. 180, 303 1/2, and 305 emery, are used in successive stages. The specimen is moved continually from center to edge and the direction of grinding is changed in going from one lap to another. Grinding is continued on each lap until scratches from the preceding stage are removed.

Polishing, usually in two stages, is done on rotating, cloth-covered disks using fine powders. For preliminary polishing, a disk covered with a cloth of moderate nap (billiard-table covering, broadcloth, or light-weight canvas duck) and charged with a water suspension of No. 600 alundum powder is used. During polishing, the specimen is moved continuously back and forth from center to edge. Polishing is continued until previous scratches are removed. The suspended abrasive is best fed continuously from a shaker bottle; the lap should be neither too wet nor too dry, and here experience is the only teacher. For specimens that tend to pit or develop excessive relief, a cloth having no definite pile (silk, airplane wing-covering) should be used; or better still, preliminary polishing should be eliminated. Final polishing is done on a disk covered with a well-piled cloth (Forstmann's cloth, velveteen, etc.) using a suspension of alumina, magnesium oxide, rouge, or chromic oxide. During polishing, the specimen should be rotated counterwise to the rotation of the lap. Final polishing is considered finished when no scratches are visible on the surface at 100×. Attainment of this condition should not require more than 5 or 10 min. polishing.

Petrographic microscope (Fig. 78) is a compound microscope designed for examination of opaque or transparent objects with polarized light.

Stand is essentially the same as that of the research microscope (Fig. 73); the body tube *T* (Fig. 78) differs from the ordinary body tube in that it is slotted to receive various optical parts.

Stage S is circular, revolving-type, centered and edge-graduated in degrees, and provided with a locking clamp and vernier which enables settings to be read to 3′ of arc.

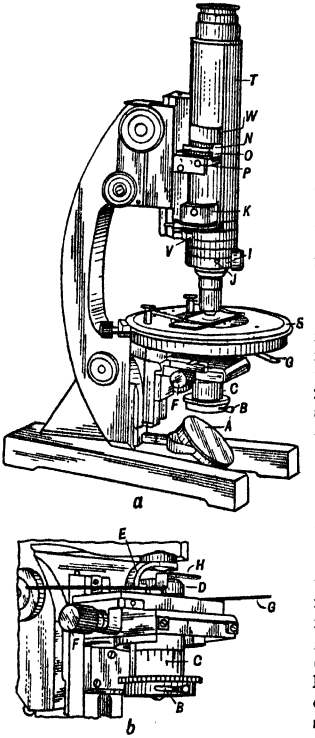

FIG. 78. Petrographic microscope (*Bausch & Lomb*).

Optics (Figs. 78, 79) comprise: (*a*) MIRROR *A* (plane on one side, concave on reverse) mounted in usual substage position. (*b*) A centered APERTURE DIAPHRAGM *B*, located immediately below the polarizer *C*. (*c*) A Glan-Thompson PRISM, used to polarize incoming light, is mounted in rotatable fitting *C*, graduated in 10° intervals and capable of rotation through 360°; a detent is provided to locate zero position. (*d*) Interchangeable CONDENSERS *D*, item *b*, of N.A. 1.1 or 1.4, are mounted on beveled base plates which fit into groove of substage-condenser holder. Top lens of condenser is mounted on arm *E*; it may be swung out of position by means of knurled knob *F*, leaving a condenser of N.A. 0.28. Condenser is also equipped with an aperture diaphragm *G*, centered relative to condenser mount, and an adjustable shadow plate *H* (used in Becke line tests for refractive-index measurements). (*e*) OBJECTIVES of the achromatic and fluorite types (N.A. 0.1 to 1.3, magnifications 3× to 100×) screw into objective holder *I*, centerable by means of keys *J*. (*f*) An ANALYZER *K* of the Ahrens prism-type, mounted in a rotatable fitting graduated in 5° intervals and capable of 90° rotation, is located on a slide operating within the body tube. (*g*) Two stigmatizing LENSES *L* and *M* (Fig. 79) are mounted within the body tube; *L* produces a parallel beam of light through the analyzer, *M* converges rays emerging from the analyzer and focuses them in the plane of the field diaphragm of the ocular. (*h*) A Bertrand lens *N* together with an iris diaphragm *O* is mounted on a slide base (centerable by means of keys *P*) which operates in a groove located on a focusable sleeve *W* operating within the body tube. (*i*) Oculars *U* of Huygenian and flat-field type, equipped with cross hairs and so constructed that the top lens is carried by a cylindrical mount movable relative to the ocular mount, by which means the cross hairs are accurately focused.

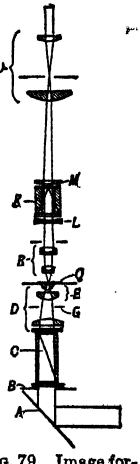

FIG. 79. Image formation in the petrographic microscope (*after Bausch & Lomb*).

Notches in the upper edge of the eyepiece tube provide easy means for locating azimuth of eyepiece.

Image formation in the petrographic microscope (Fig. 79) depends upon the properties of polarized light and the nature of its interaction with the object. Ordinary light entering polarizing prism *C* is converted into plane polarized light (*i.e.*, light vibrating in one direction only). The polarized beam thus produced passes through condenser *D*, which acts to focus light upon object *Q*. Light and object may interact in a number of ways depending upon the optical characteristics, thickness, and orientation of the object. In general, the beam refracted by the object is polarized in one or more directions (different from the direction of vibration of the incident light). Rays refracted by the object are taken by the objective *R*, which acts to form of them a primary enlarged image. The primary-image-forming rays are intercepted by the stigmatizing lens *L*, which redirects rays to form a parallel beam (necessary to keep optical defects due to passage through the analyzer at a minimum). This then passes through an analyzing prism *K* whose function it is to allow passage therethrough of only those rays (or components of rays) whose direction of vibration is parallel to some fixed direction (determined by the setting of the analyzer). The filtered beam then passes through a second stigmatizing lens *M*, which imparts to the rays the directions possessed before passing through the first stigmatizing lens. The beam then enters ocular *U*, which forms a secondary enlarged VIRTUAL (orthoscopic) IMAGE. The interaction of the convergent plane-polarized beam produced by the condenser and the object may give rise to interference phenomena which are imaged

in the back lens of the objective. These phenomena may be viewed by removing the ocular and examining the small image formed in the back lens, but they are more readily seen by interposition of the Bertrand lens N (Fig. 78) between ocular and objective; ocular and Bertrand lens then form a secondary microscope which is focused on the back lens of the objective. The diaphragm O provided with the Bertrand lens serves to exclude effects due to object areas other than the one of interest. The image thus formed is said to be CONOSCOPIC.

Adjustment for orthoscopic observation. (*a*) Place object slide on stage. (*b*) Illuminate mirror and adjust to direct beam into polarizer. (*c*) Displace Bertrand lens and analyzer out of optical system; open all diaphragms and swing top lens elements of condenser out of position, if low-power objective is used. (*d*) Focus on object. (*e*) Close field diaphragm and focus its image on object plane by racking condenser up and down. (*f*) Center field diaphragm image by means of mirror, then open diaphragm until it just clears the field of view. (*g*) Remove ocular and adjust lower aperture diaphragm B (upper diaphragm G is used with high-power objectives) until its image in the back lens of the objective covers two-thirds of the lens area. (*h*) Replace ocular, insert analyzer into optical path, and refocus with fine adjustment.

Adjustment for conoscopic observation. (*a*) Repeat steps *a* to *f* inclusive, as for orthoscopic observation, using a high-power objective. (*b*) Insert analyzer into optical path and set to crossed position, *i.e.*, to such a position that no light is transmitted by analyzer when object is out of the optical path. (*c*) Insert Bertrand lens and focus the interference figure now visible through the ocular by moving Bertrand-lens sleeve up or down. (*d*) Close Bertrand lens-diaphragm (if needed) to exclude extraneous figures.

Uses. Primary use is for the determination of optical characteristics of transparent natural and artificial minerals, resulting in identification of unknown materials. The literature of microscopic mineralogy and petrography (examination of thin sections and fragments) gives excellent detailed information concerning the microscopic determinations. A selected bibliography follows. The instrument is also used to reveal crystalline characteristics in materials which otherwise appear amorphous, and to expose the presence of crystals mounted in a medium of equal refractive index.

Example. Place a pinpoint of grease on a slide and cover with a cover glass; place another slide over cover glass and squeeze the two slides together until grease spreads out into an almost invisible thin film. Examine with biological microscope at 1,800×, using objective of 1.4 N.A. (amorphous appearance). Transfer slide to petrographic microscope and adjust instrument for orthoscopic observation, using 45× objective (0.85 N.A.) and 10× ocular. Set analyzer and polarizer in crossed positions and rotate stage, when various parts of the field will appear bright while the rest is dark. These areas will change from light to dark on rotation of the stage. The weak birefringence exhibited by this material is more clearly shown by inserting a first order red plate in the slot V (Fig. 78) of the body tube, maintaining prisms in crossed position. As the stage is rotated, the material now shows brilliant color changes (evidence of crystalline matter).

Bibliography. F. E. Wright, *Methods of Petrographic-Microscopic Research*, Carnegie Institute of Washington; A. Johannsen, *Manual of Petrographic Methods*, McGraw-Hill Book Co.; E. M. Chamot and C. W. Mason, *Handbook of Chemical Microscopy*, 2 vols., John Wiley & Sons, 1930, 1931; F. G. Tickell, *Examination of Fragmented Rocks*, Stanford University Press, 1931; A. N. Winchell, *Elements of Optical Mineralogy*, 3 vols., John Wiley & Sons, 1929–1933; E. S. Larsen and H. Berman, *The Microscopic Determination of the Nonopaque Minerals*, U. S. Geol. Survey Bull. 848, 1934; Fry, *Petrographic Methods for Soil Laboratories*, U. S. Dept. Agr. Tech. Bull. 344, 1934; Head, *The Technique of Preparing Thin Sections of Rock*, University of Utah, 1929; Rogers and Kerr, *Optical Mineralogy*, McGraw-Hill Book Co., 1942.

Vertical illuminator (Fig. 76) with a polarizing prism, located at the window F, may be attached to a petrographic stand for use in the examination of opaque surfaces.

Adjustment for polarized reflected light. (*a*) Place object on stage. (*b*) Open aperture and field diaphragms, throw Bertrand lens and analyzer out of optical path. (*c*) Adjust illuminant so as to cast a beam of light into polarizer. (*d*) With plane-glass reflector in position, focus on object. (*e*) Close field diaphragm, focus by means of lens C (Fig. 76), center image by rotation of A, and open field diaphragm until it just clears field of view. (*f*) Remove ocular and close aperture diaphragm until two-thirds of the area of the back lens of the object is illuminated. (*g*) Replace ocular, insert analyzer into optical system, and adjust focus. (*h*) Rotate analyzer and determine position of extinction, turn analyzer to a position 2° to 4° away from extinction position.

Use in the identification of opaque minerals. The amount of information obtained from such examination is limited primarily to polarization colors and the existence of anisotropism. Recent improvements in equipment are rapidly overcoming this deficiency by making provision for measurement of the extent of elliptic polarization of the reflected beam. The literature of mineragraphy (study of opaque minerals) provides detailed information concerning techniques.

Selected bibliography. Farnum, *Determination of Ore Minerals*, McGraw-Hill Book Co., 1931; M. N. Short, *Microscopic Determination of the Ore Minerals*, U. S. Geol. Survey Bull. 914, 1940; E. S. Dana and W. W. Ford, *Textbook of Mineralogy*, John Wiley & Sons.

Illuminators for microscopic work are of arc or filament type. ARC LIGHT is characterized by a beam of high, though fluctuating, intensity, whereas the filament emits a beam of constant, though lower, intensity.

Filament-type illuminator (Fig. 80, item *a*) consists essentially of a light bulb mounted in a socket *A* at the base of a spherical housing, a condenser focusable in a sliding mount *B*, and an iris diaphragm *C*. Vents in the base of the socket and a chimney assure air circulation. Slot *D*, between diaphragm and condenser, is used to hold filters or diffusing disks. Bulbs with ribbon or coil filaments operated on 6-v. or 115-v. current are available. The lamp is mounted on a horseshoe-type base and should be adjusted vertically and/or inclined to any desired angle. Two types of CONDENSING SYSTEMS are available: a spherical system comprising two plano-convex lenses mounted together, or a more highly corrected system consisting of a single aspheric lens. Both systems are aided by a spherical reflector located within the housing.

Arc-type illuminator consists essentially of an arc light formed by two carbon electrodes held by clips to traveling blocks which operate in tracks (one vertical and the other horizontal) and are hand or mechanically actuated. The assembly enclosure has a sliding tube carrying a spherical or aspheric condenser with provision for focusing. Mounting is similar in principle to that in Fig. 80, item *a*, with an iris diaphragm and filter slot. The illuminator is designed to operate on 115-v., a.-c. or d.-c. The horizontal arc should burn to a crater (the vertical to cone) and the vertical should not be permitted to obscure the crater.

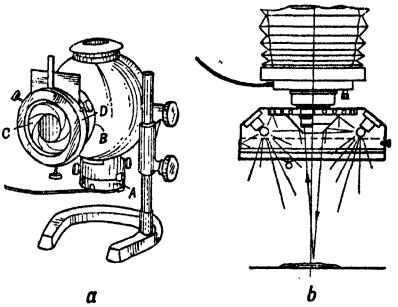

FIG. 80. Microscope illuminators.

Water-cooling cells should always be used with either illuminator, since an uncooled light beam will eventually ruin the optics of the microscope. Such cells of rectangular form, made of Pyrex with polished plane surfaces (fused construction preferred) are available from any supply house. Water temperature should not exceed 50° C. since absorption of infrared rays at higher temperatures is practically negligible. For illuminators subject to long continuous use, cells equipped with inlet and outlet tubes providing continuous water circulation are available.

Ring illuminator (Fig. 80, item *b*) is designed for low-power photomicrography (see p. 89).

Testing with the Microscope

It is universal experience that understanding of natural phenomena always makes a tremendous advance whenever a structure, form, composition, motion, or the like, previously hidden from view, is made visible. The role of the microscope in ore dressing is to make such visibility possible in cases where inability to see otherwise is due to smallness of the hidden matter. Identification of mineral species, which, alone, many engineers associate with the use of the microscope, is probably its smallest and least important use in an ore-dressing laboratory. Determination of mineral association in the ore is important; determination of mineral association in milling products is more important; determination of mineral association in ore pulps, particularly while they are undergoing treatment, is most important. The microscope goes a long way in aiding these determinations. Techniques are reasonably well known and standardized for investigating ores and mill products—static conditions, as it were; methods for examining pulps, and for interpreting what is seen, are incompletely known and are far from standardized. They require a full knowledge of the optical apparatus available, ingenuity in its application, acuity of observation, patience, and perseverance.

The microscopes described will render the surface of almost any mineral fragment visible, and will give some information as to its internal make-up. Used with suitable nonoptical accessory tests they will give considerable indication of the chemical reactions of minerals with their surroundings. Used with ingenuity as to illuminating means, they will answer many questions as yet unanswered. Microscopy has, in the past, been left too largely to the microscopist without knowledge of ore-dressing technology; the space herein allotted to the subject is recognition that it is an essential tool for the mineral dresser.

Mineral association in an ore determines the method of beneficiation and the fineness of ultimate comminution necessary (see Sec. 5, Art. 1). When the valuable mineral is coarsely disseminated, sufficient information on this score can usually be obtained by a sizing-sorting-assay test, but finely disseminated ores cannot be studied intelligently

without a microscope. The procedure involves preparation and examination of thin sections for nonmetallic ores, and polished sections for ores containing opaque minerals such as the metalliferous sulphides and oxides. For methods of preparation, identification, and grain-size measurement, see ***Bibliography***, pp. 82, 85. Grain-size determinations serve as a guide to the degree of grinding required to effect maximum liberation provided proper consideration is given to the mode of occurrence and relative hardness of ore minerals and gangue. For example, when an ore shows consistent ore-mineral deposition in fractures in the gangue, fine grinding is not necessarily indicated, for breakage will probably take place along these mineral-bearing fractures. The appearance of the edges of the sulphide-mineral grains and of cracks traversing them tells whether any alteration that would be likely to affect flotation has occurred. Inclusions of worthless or deleterious substances that would lower grade of concentrate, such as silicates between the laminae of graphite grains, blende in galena and the like, are immediately apparent in a polished section. The degree of admixture of sulphides in complex ores can be studied readily, and in many cases one or two properly chosen sections are sufficient to tell whether it is probable that separation can be effected without resort to chemical methods. Much time and money can thus be saved, and no test of any ore should proceed beyond the preliminary stage without such microscopic examination. If examination of a gold ore reveals the gold as minute metallic particles 1- to 3-μ diameter, completely encased in pyrite, it can be forecast that cyanidation of the ore ground to <325-m. would give a poor recovery; the best that would be hoped for is collection of the gold in a pyritic concentrate, followed by ultrafine grinding or roasting and cyanidation, or by smelting of the pyrite concentrate, the economics of the situation controlling the decision. With information such as the above, a good start can be made on a qualitative flowsheet.

Quantitative mineralogical analysis is useful primarily in study of the products of a concentrating operation. The first step is identification of the important minerals and mineral groups. The analytical work is done with low magnification, since identification of the valuable mineral, the accompanying heavy mineral or minerals, and rocky gangue minerals as a group is easy. Failing this, however, analysis must be preceded by identification, and for this work Rogers' crushed-fragment method with the petrographic microscope is best.

Apparatus. Low-power microscope, preferably binocular type, so mounted as to permit ready relative movement of stage and objectives. The stage should be ruled in squares about 10 mm. on a side and the microscope should have an eyepiece net micrometer with one of the squares subdivided. Leitz and Bausch & Lomb both make binocular microscopes for ore-dressing work having magnification up to 20×, fitted with racking mechanism in two directions at right angles, and provided with ruled stage and micrometer as above. For greater magnification a metallurgical binocular with 25- and 55-mm. objectives and 6× and 10× oculars is a suitable instrument; it is not usually fitted with racking stage, but the sample is mounted on a suitably ruled slide, when manual movement to change fields is readily effected.

Procedure consists in close, accurate sizing of the sample and a mineral count of a sufficient number of fields of each grade to establish a reliable number percentage. Sizing should be by the wet-dry method (Art. 12), grading fines by elutriation (Art. 13), if necessary. Coarser fractions can be transferred to and distributed on the slide by means of a small spatula. The layer should be only one grain deep and, if the grains are spaced at least one diameter, which may usually be accomplished by tapping the slide, counting will be made much easier. Finer grades are best transferred to the slide by shaking them on through a suitable fine screen. If, as is rarely the case, the analysis must be carried down into very fine water-separated grades, the methods of mounting employed in microscopic sizing analysis (Art. 15) should be used.

Sampling. Irrespective of the size of sample taken for screen analysis (see Arts. 1, 12), the bulk of most of the grades will be too great to permit mounting of the entire grade on one or even on several slides, and it is necessary to sample the individual grades. Sampling of such fractions for counting is one of the most difficult and unsatisfactory parts of the procedure. Probably the best method is to pour the lot through a small-necked funnel onto a glass plate, so as to form a cone-shaped heap, and then cone and quarter (Art. 2) with a small spatula, until a sample is obtained that will give the required layer one grain deep on the slide. A micro-riffle sampler (Art. 3) may be used. It can be purchased from any of the laboratory-supply houses.

Counting should proceed systematically. In the largest sizes, with a few particles only in each square, it is best to count all of the grains in the ruled field; in the intermediate sizes only the grains in selected squares need be counted, the squares selected being regularly spaced to cover the ruled field and the number counted being proportional to the size of grain, so that each size shall be analysed with substantially the same degree of accuracy. Application of this criterion requires experience and judgment on the part of the analyst. The factors involved are: degree of uniformity of distribution of the different kinds of grains in the field, degree of uniformity in size of particles, amount of composite material (middling grains), relation of the weight of one particle to the weight of material in one square and in the whole field, relation of the weight of material in the field to the weight of the grade, and relation of the weight of the grade to the weight of original unsized sample. In the finest size the squares counted are the smallest in the micrometer net, and one or several of the squares in this net should be counted from each selected square on the stage net, according to the above criteria. Some

analysts recommend counting all or selected squares along one or both diagonals of the net, thus substantially cutting sections through the center of the field; others choose squares equally spaced in both directions covering the entire area. In no case should random selection or selection involving judgment on the part of the operator be permitted.

In counting the grains in any square it is best to carry through and record the count on each kind of grain separately. If one kind of grain breaks in such a fashion that its volume is consistently different from that of the grains of the other minerals in the grade, this fact should be noted and the relative volume established or approximated. In counting grains that are composites of the varieties sought to be separately reported, the relative volumes of the constituents must be estimated and if, as is usually the case, the relative proportions vary in different grains, the count should be classified on the basis of this proportion. Four classes are enough in any case, *viz.*, <25%, 25~50%, 50~75%, >75%. Grains containing traces of, say, sulphide should be classed as tailing and those containing traces of gangue as concentrate. For most purposes three or even two classes are sufficient.

The aspect of a grain presented to the eye in microscopic estimation is a surface aspect, whereas relative volume is the figure sought, hence the visual impression must be suitably weighted in recording the percentage estimate. Coghill and Bonardi (*TP 211 USBM*), analyzing a molybdenite flotation concentrate containing pyrite and silica, weighted FeS_2 and the MoS_2 locked in middling at two, compared to one for silica, basing the rating on the relative specific gravities, but the free MoS_2 was rated at one on account of its flaky character and the fact that the free flakes lay flat. Their microscopic analysis, thus weighted, showed 41.4% MoS_2 against 38.2% by chemical assay. Fig. 81 shows one of the fields counted, sketched by means of a camera lucida. This sketch, showing that most of the silica in this particular concentrate was in the form of middling, pointed the obvious conclusion that the proper method to raise the grade of concentrate was to grind finer.



FIG. 81. Sketch of molybdenite flotation concentrate (*after Coghill and Bonardi*).

Time for a test will range from 3 to 8 hr. according to the size of sample and the number of minerals counted.

Bibliography. Thomas and Apgar, "Approximate Determination of Minerals in Concentrates by Means of the Microscope," *18 CME 514.* C. Y. Clayton, "The Microscope in Ore Dressing," *19 CME 61.* D. P. Hynes, "Degree of Crushing to Free Economic Minerals," *110 P 994.* Coghill and Bonardi, "Approximate Quantitative Microscopy of Pulverized Ores," *TP 211 USBM.* "Examination of Ores and Ore-Dressing Products," *105 J 723.* Head, "The Microscope in Ore Testing," *RI 3425.* Head *et al.*, "Statistical Microscopic Examination of Mill Products of the Copper Queen Concentrator of the Phelps Dodge Corporation, Bisbee, Ariz.," *TP 533 USBM.* Gaudin and Spedden, "Flotation Microscopy of Some Cuban Manganese Ores," *153 A 563.* Martin, "Microscopic Studies of Mill Products as an Aid to Operation at the Utah Copper Mills," *87 A 455.* Gaudin and Henderson, "Quantitative Microscopic Study of Flotation Products of Anaconda Copper Concentrator," *Montana School of Mines Publ.*, Jan. 1933. Head *et al.*, "Detailed Microscopic Analyses of the Ore and Mill Products of the Silver King Flotation Concentrator, Park City, Utah," *RI 3256.* Del Giudice, "Microscopy in Flotation," *112 A 424.*

Photographic Testing

Use of photography to record microscopic images and other items of technical interest is associated with the adolescent period of photography; with its coming of age it has become available for use in a wide field of technology, particularly in the study of high-speed phenomena. In this aspect, the camera may be considered a magnifier of time as the microscope is a magnifier of distance. For example, action photographed on continuous film at the rate of 64,000 exposures (frames) per sec. and viewed at the normal rate of 16 frames per sec. will appear to have been slowed down by a factor of 4,000. Conversely, it may be used to speed up movement in slow change.

Essential elements of photography are: (1) the illuminating apparatus whose function it is to concentrate light of sufficient intensity on the object area to be photographed, (2) the photographic lens (or objective) which receives light from the object and focuses it as an image on the negative, (3) the photographic negative on whose surface the image is etched by photochemical reactions, and (4) a shutter (mechanical or optical) which controls the length of time (EXPOSURE) that the negative is subject to the action of the light.

Cameras are essentially light-tight boxes with lens and negative at opposite ends and, usually, a shutter between them. The distance between lens and negative should be adjustable, and the negative should be in a plane at right angles to the optical axis of the lens. Cameras are classified as fixed-negative or moving-negative types; fixed-negative cameras are further classified as hand or stand cameras depending upon the necessity for the support of a stand.

Cameras for an ore-dressing laboratory (research) should consist of two hand cameras (one taking a 35-mm. negative and the other a 4×5-in.), a stand camera (8×10-in. negative) mounted on an optical bench, a high-speed motion-picture camera, and a high-speed optical shutter (independent). The description of instruments and procedures that

follows is limited to basic uses; for information concerning accessories and advanced techniques, reference should be made to the technical literature and the catalogues and house organs of the manufacturers.

Manufacturers. Agfa Ansco, Argus Inc., Bausch & Lomb Co., Bell-Howell Co., A. Buehler, Candid Camera Corp., Cambridge Instrument Co., Central Camera Co., L. F. Deardorff & Sons, Duhem Motion Pictures Mfg. Co., Eastman Kodak Co., Folmer Graflex Co., Fearless Camera Co., General Engineering & Mfg. Co., Gundlach Mfg. Co., International Industries Inc., International Projector Corp., Keystone Mfg. Co., E. Leitz Inc., Mitchell Camera Corp., Paragon Camera Co., Rayflex Co., Revere Camera Co., Sharman Camera Works, Spencer Lens Co., Williams, Brown & Earle, Inc.; C. Zeiss.

Miniature camera is characterized by an extremely small negative size (24×36-mm.), compactness, and ease of handling. It comprises: (1) Lens *A* (Fig. 82) attached to the front of the body (which is $5\,1/2 \times 2\,3/4 \times 1\,3/8$ in.) by a mounting which is coupled to the range-finder and is focused by wheel *B*. (2) Sprocket wheels *C* to transport film from a full spool placed on claw *D* to an empty spool placed on claw *E;* a dial at *F*, actuated by *G*,

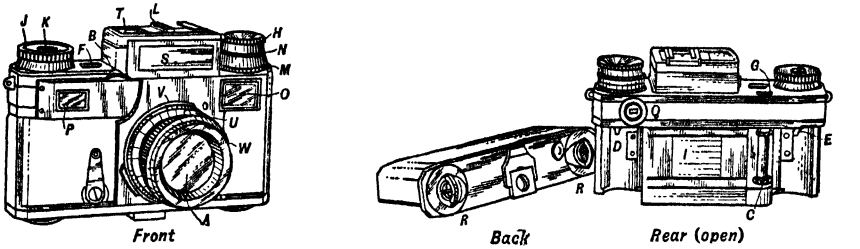

FIG. 82. Miniature camera (*Zeiss Contax*).

indicates exposures. Milled knob *H* rewinds film. (3) A metal focal-plane shutter *I*, coupled to the film transport mechanism so that winding of shutter automatically transports film, operates immediately in front of the film. Shutter is cocked by rotation of knob *J* and is set to the desired exposure time by lifting and rotating *J* until an index line thereon appears opposite this exposure time engraved on mount; release is made by pressing button *K* by finger or by bulb. (4) A photoelectric exposure meter *L*. Knob *M*, whose mount is engraved with shutter speeds, controls resistance used to balance the current generated by the photoelectric cell. Knob *N*, whose mount is engraved with all possible values of lens aperture, has a square cut out which moves over a scale of film speeds. (5) A combination range- and view-finder which determines distance of object to lens and shows field area has object windows *O* and *P* (which must be unobstructed during focusing) and an eyepiece *Q*.

Loading. (1) Remove camera back after giving locking keys *R* a half turn. (2) Engage full spool with claw *D*, with face (dull side) of film toward *I*. (3) Catch end of film in take-up spool. (4) Place this spool to engage claw *E*, and engage film perforations with sprockets *C*. (5) Replace back and lock by half-turns of *R*. (6) Press shutter-release button *K*. (7) Turn knob *J* to the right until it stops. (8) Press shutter-release button. (9) Turn picture-counter wheel *G* until it reads zero.

Exposure. (1) Set *N* to Scheiner speed rating of film (obtained from manufacturer). (2) Release cover *S* of exposure meter and point camera at darkest part of object to be photographed. (3) Rotate *M* until exposure-meter indicator comes to rest opposite diamond on scale *T;* close meter window. Read exposure time corresponding to any lens aperture on scale *M*. (4) Choose a combination of aperture and exposure that includes the maximum exposure consonant with the motion of the object and the method of supporting the camera. (5) Set diaphragm by turning *W* and exposure time by *J* (as above). Cock shutter, if necessary. Most operators recock shutter immediately after each exposure. (6) Hold camera firmly in the two hands, with the back lower corners against the bases of the thumbs, the crooked thumbs pressed against the camera back, the index fingers on top of *H* and *K*, the second finger of the right hand on *B*, and the other fingers of the two hands gripping the front of the camera in such a way as to clear windows *O* and *P*. (7) Look through eyepiece (camera gripped as in *6* and pressing against nose) and rotate focusing wheel with second finger of right hand until the dual image in the lighter, centrally located rectangle of the rectangular field of view fuses into a single image. The camera is now focused. (The distance in front and in back of the object within which all parts of the scene will appear in sharp focus, for a given aperture, may now be read from the depth-of-focus scale *V*. This information is useful in connection with *3* in performing *4*.) (8) Release shutter, when desired, by pressing *K* smoothly with ball of index finger. (9) Recock shutter.

Selection of exposure time (SHUTTER SPEED) depends upon the opening of the aperture diaphragm, the BRIGHTNESS of the object (amount of light reflected or refracted by object

under the prevailing conditions of illumination), the sensitivity of the film to light (FILM SPEED), the motion of the object, and upon the desired depth of focus. Object brightness is integrated by the exposure meter into a reading on dial *M*. Film speed is built into the film; its value in the integration is fixed by setting *N* when the film is loaded. The reading obtained on *M* fixes the exposure time to be used with a particular aperture, but does not fix either exposure time or aperture opening (denoted by *f*/ number, *e.g.*, *f*/1.5 to which it is related). If object motion imposes no limitations on exposure time, the desired depth of focus may be used to determine *f*-value and then shutter speed is read off scale *M* at the point opposite the chosen *f*-value on scale *N*. On the other hand, if the primary objective is to stop the motion of an object, the exposure time is estimated on the basis of object speed and distance from camera, and the necessary aperture setting is read from scale *N* opposite the estimated time. If stoppage of motion and depth of focus are equally important but lead to incompatible results, judgment must be exercised to effect a compromise.

Troubles in use chargeable to camera or film are remarkably few and arise from lack of experience. Failure to see the inner rectangle in the view-finder is due to obstruction of the window (usually by a finger). Inability to turn shutter winding knob immediately after loading is due to improper loading. Remove camera back, determine trouble, and correct. For negative failure see discussion on p. 90; for care of lens, p. 77.

Uses. The miniature camera is unexcelled for taking record pictures if demands for sharpness of enlarged prints are not too severe, *e.g.*, drill-core records requiring no enlargement are conveniently made with a miniature camera (*145 #5 J 86*). Standardization of set-up permits the recording of 100 ft. of hole in about 15 min. at a cost of about 25¢. ADVANTAGES are: the large number of exposures to the roll (36); the large aperture of the lens, which makes it possible to take picture under adverse lighting conditions; ease of focusing, small weight, and compactness; the chief DISADVANTAGE is the necessity for enlargement. It is used in the laboratory also for copying and for photomicrography; it is especially useful with a petrographic microscope because it takes Kodachrome film.

Hand camera (4×5-in. negatives) is shown in Fig. 83. Lens *A* and shutter *B* are mounted on a plate *C* held in position on a 4-in. square lens board *D* mounted on a track and moved by pinion heads *E* for focusing. Bellows *F*, 13 1/2-in. capacity, connects lens board to camera back, which is provided with a ground-glass focusing screen. A focal-plane shutter operates immediately in front of screen, and in conjunction with the lens shutter makes available 24 speeds ranging from 1 to 1/1,000 sec. A range-finder *G* coupled to the lens focusing device simultaneously determines object distance and focuses the camera. A view-finder *H*, adjusted to correct for parallax, depicts the field; for action shots a wire-frame finder *I* is used. Two types of backs are available, taking plates, cut film, film packs, and roll film. A revolving back permits the length of the negative to be placed vertically or horizontally without turning the camera. Principles of operation as a hand-held camera are as described for the miniature camera, but exposure meter is not built in. When ground-glass screen is used for focusing, operation follows that of the stand camera (see p. 88).

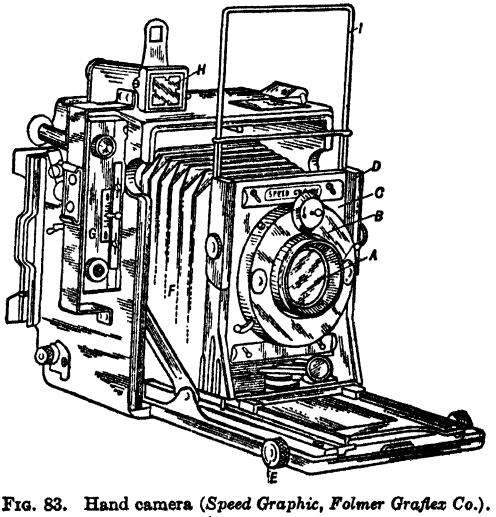

FIG. 83. Hand camera (*Speed Graphic, Folmer Graflex Co.*).

Uses. For outdoor record work when sharp prints are desired; for interior work, used with *f*/2.9 Plaubel lens and/or a synchronized flash; and as an all-purpose camera in the laboratory.

Stand camera (Fig. 84), mounted on an optical bench, is characterized by a large negative size (as large as 8×10-in.), lack of portability, by rigidity, and provision for elimination of vibration, all of which are of prime importance in photomicrography.

The camera consists of a tapering 40-in. extension bellows *A*, connected at the narrow end to a metal lens board *B* fitted with a shutter *D*, and at the wide end to an all-metal camera back *C*, grooved to receive book-type plate holders *E* (accommodating 8×10-,

5×7-, 4×5-, and 3 1/4×4 1/4-in. plates), or a ground-glass focusing screen (with clear center) or a clear-glass screen with graduated cross lines. The back and lens board are supported by a rectangular graduated bar *F*, hinged at *G* so that the camera may be used in vertical position. Extension rods *H* locate and stabilize *F* in the vertical position. Bed I, of the optical stand, carries pivot *G* of the camera support, a microscope plate support *J*, the illuminant *K*, and any other accessories that may be needed. The bed is supported by two rods *L* which pass through the table top into a support system equipped with vibration absorbers for use with time exposures. The microscope plate support *J*, capable of accommodating practically any microscope, is adjustable for height and

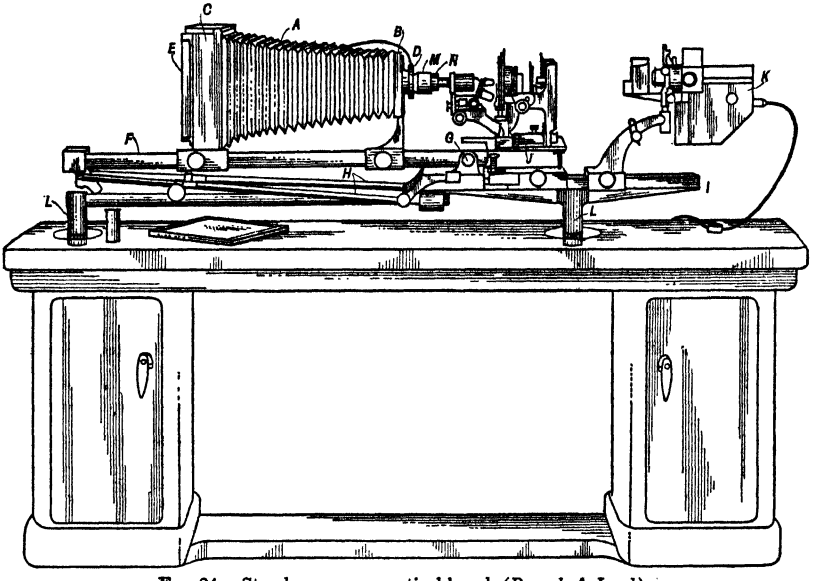

FIG. 84. Stand camera on optical bench (*Bausch & Lomb*).

provided with leveling screws. Clamps and guide plates are provided to hold the microscope in position on the plate. The illuminant is of the arc or filament type (p. 83); it may be adjusted in three directions and swung in a short arc in the plane of the bed.

High-power photomicrography using the optical bench and camera consists of three sets of operations. (1) Optical alignment, (2) focusing and taking the picture, and (3) processing and printing of negative.

Optical alignment requires that the optical axes of all optical parts of the set-up be collinear with an axis perpendicular to the surface of the negative and passing through its center. Alignment with the camera in a vertical position is more difficult than with a horizontal camera; the latter should, therefore, be used whenever possible. In the procedure for horizontal set-up that follows, it is assumed that all optics are located in centerable mounts; if this is not the case, centering has been done by the manufacturer.

Procedure. (1) Place ground glass in camera back and extend bellows completely. (2) Remove lens from lens board, screw light-tight connector *M* on shutter, set shutter to time, open, and close the iris diaphragm mounted on lens board (if none exists place a paper or metal disk, pierced with a pinpoint in the exact center, in the shutter mount). (3) Open field diaphragm (near lamp condenser), remove lamp condenser and adjust position of light until a light spot is seen in center of ground glass as determined by diagonals of back. If lamp condenser is not removable, center light with respect to condenser and then move light and condenser as a unit until the desired spot of light is seen. This places center of plate, center of diaphragm, and light on one and the same optical axis, the first two, which determine the optical axis of the camera, being fixed. (4) Replace light condenser and adjust it without moving anything else until light spot remains in center of ground glass when condenser is focused along the optical axis. (5) Clamp microscope on soleplate, remove ocular, objective, condenser, and mirror. Screw light-tight connector *N* onto ocular end of body tube, insert pinhole ocular cap (dummy ocular fitted with a metal disk with a pinhole perforation in the exact center). (6) Open diaphragm on lens board, bend microscope into horizontal position, and move lens board toward microscope until the light-tight sleeve connectors *M* and *N* intermesh. (7) Place aperture diaphragm (SUBSTAGE IRIS) in its central position relative to scale on mount and close to a very small opening. (8) Adjust microscope in soleplate or adjust soleplate until a small spot of light falls in the

of the ground glass. This aligns the optic axis of microscope, determined by center of ocular and center of aperture diaphragm, with axis already determined for the stand. (9) Move lens board of camera away from ocular, replace pinhole eyepiece with a regular ocular, place objective into viewing position, place condenser in substage mount; place object on stage, and rack condenser until it nearly touches object. (10) Focus light condenser until an image of the light source is formed on aperture diaphragm. A piece of white cardboard held against diaphragm facilitates viewing. (11) Open aperture diaphragm and focus microscope on object, using dark glass ocular cap, if image is too bright. (12) Partially close field diaphragm and rack condenser (substage) until image of field diaphragm is seen in field of view. (13) Center either objective or substage condenser (one or the other is centerable, and in rare cases both, when the stage may also be centerable) until this image is in center of field of view. (14) Open field diaphragm and repeat (10), then repeat (12), finally open field diaphragm until it just disappears from field of view. (15) Remove ocular, partially close aperture diaphragm, center its image in back lens of objective, if necessary, and then open aperture diaphragm until two-thirds of the area of the back lens of the objective is illuminated. (16) Replace ocular and check image quality. (17) Remove eyepiece and replace with a photo-eyepiece or a negative eyepiece (*e.g.*, Homal of Zeiss Co.). (18) Move lens board of camera until light-tight connectors form a light seal. (19) Focus microscope until image on ground glass is sharp. An extension focusing rod may be used if needed. Move camera back (*i.e.*, compress bellows) until image after refocusing is of proper dimensions. (20) Replace ground glass by clear-glass back and focus image as viewed through AUXILIARY MAGNIFIER (a two-lens magnifier previously adjusted so as to focus on the camera side of the glass back when it is held flush against the other side). (21) Replace clear-glass back with a loaded plate-holder, close shutter, remove plate-holder slide, and suspend optical bed. (22) When vibration ceases, open shutter (using cable release), expose for proper length of time, close shutter, lock optical bed, replace slide, and remove plate-holder to darkroom for developing and printing (*post*).

Low-power photomicrography using the optical bench and camera is simply a matter of focusing the camera and illuminating the object properly; the complicated procedures of alignment and critical illumination are unnecessary.

Illustrative procedure followed in photographing air-mineral aggregates formed in phosphate flotation follows: (1) Place sample in a Petri dish of medium depth; slowly add water and overflow an amount sufficient to leave clear water in dish. This is done to remove a surface film of oil and slimes which render the original solution cloudy. (2) Place dish on the matte surface of a piece of white bristol board on the soleplate. (3) Screw a photographic objective onto shutter on lens board; set shutter to time, open, open diaphragm of lens board (if present), open aperture diaphragm of lens, and raise camera to vertical position. (4) Fasten annular light ring to lens (see Fig. 80, item *b*), turn on light, and move lens board until image appears on ground glass. (5) Move camera back until image is of desired size. Move dish until image is located within the area to be occupied by negative (ground glass is ruled with outlines of the different negative sizes). (6) Measure distance between lens diaphragm and mid-depth point of object; measure or estimate depth of object. Calculate aperture diaphragm setting to give the required depth of focus (near distance $= Ll/(L + l)$, far distance $= Ll/(L - l)$, where $L = F^2/12fD$ and l = object distance in feet, F = focal length in inches, f = lens aperture f/number, D = diameter in inches of the largest circle that will appear as a point in the final print). (7) Focus critically upon the mid-depth plane of object. Set aperture diaphragm to calculated stop (a larger stop may be used if no objectionable background material exists). (8) Place loaded plate-holder in position, close shutter, remove plate-sheath, wait for all vibration to cease, expose plate for required time, replace sheath, and remove plate-holder.

Motion-picture cameras, characterized by use of a film moving behind a synchronized, intermittently operated shutter (rotating sector disk), are available in hand or motor-driven types capable of making 300 to 400 exposures per sec. High-speed motion-picture cameras making as high as 64,000 exposures per sec. on 35-, 16-, 8-, and 4-mm. film have been constructed (*11 Zeit. für tech. Physik 394; 4 J. Sci. Instr. 82; 17 Bell System Tech. Jour. 393; 25 Trans. Soc. Motion Pict. Engs. 25; 16 Electrical Jour. 509; 42 Gen. El. Rev. 391; 4 Rep. Aero. Res. Inst., Tokyo Imp. Un. 187; J. Soc. Motion Pict. Engs. 474*). Because of the high film velocities involved (4,000 f.p.s. for 35-mm. frame at 64,000 exposures per sec.) the design of these cameras is different.

Fastax variable high-speed motion-picture camera, designed by the Bell Laboratories (*22 No. 1 Bell Lab. Record 1*), is a compact, portable, motor-driven stand-type unit, capable of 300 to 8,000 exposures per sec. for 8-mm. film and 150 to 4,000 exposures per sec. for 16-mm. film. Image-forming rays from the photographic objective *A* (Fig. 85), mounted on a cylindrical housing, fall upon a prism *B*, with 4 faces for 8-mm. and 8 faces for 16-mm. film, rotated by gear connection to the film-driving sprocket *C*, and are refracted and emerge and come to a focus as shown on the moving film *D*. Film with twice usual number of perforations is fed over sprocket *C* by a 1/3-hp., universal, high-torque type motor, identical with the first, independently connected, but started by the same switch.

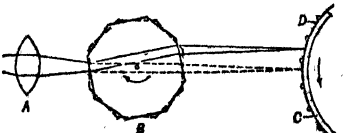

FIG. 85. Optical system of Fastax camera (*after Smith*).

Motors operate at 12,000 r.p.m. under full line voltage; variable resistors decrease r.p.m. so that exposures as low as 300 per sec. may be made (see Fig. 86). Since no clutch arrangement is used, film accelerates to about 90% of its maximum speed within the first 30 or 35 ft. exposed; full speed is not attained until toward the end of a 100-ft. roll; exposure through the last 65 to 70 ft. is approximately 1/30,000 sec. for 8-mm. and 1/12,000 sec. for 16-mm.

Lens is of standard design; used at stops $f/4.5$ to $f/20$. Camera is focused on a ground-glass screen before introduction of film.

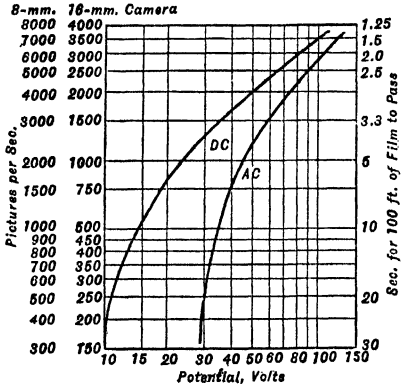

FIG. 86. Number of exposures *vs.* voltage (*after Smith*).

Lighting is the key to successful high-speed photography. Illuminant must be capable of providing intensities at the object of 10,000 to 500,000 foot-candles. Projection-type tungsten-filament lamps, mounted in reflectors, provided with aspheric collecting lenses, are used; current is so controlled that filaments are heated to within a few degrees of their melting point, to secure maximum brightness. Water cells are interposed between light and object. In use, two lamps are wired in series during the set-up period and are switched to a parallel circuit immediately before exposure.

Uses. Study and analysis of mechanical movements, strength of materials tests, action of jig beds, table beds, flotation froths, etc.

Photographic materials consist of a thin light-sensitive layer (photographic EMULSION) of silver halide crystals suspended in gelatin, carried on glass, cellulose nitrate or acetate, or paper, respectively known as PLATES, FILM, and PAPER.

Plates and films are classified as ORDINARY when sensitive only to blue and ultraviolet light, CHROMATIC when sensitive also to green but not to red, and PANCHROMATIC when sensitive to all colors of the visible spectrum. Ordinary emulsions are used for copying black-and-white originals, etc.; orthochromatics for photographing objects containing no red, or when red details are unimportant; panchromatics for objects containing all colors. Each class is supplied in a number of grades developing different degrees of contrast.

Photomicrographic plates (film rarely used) suggested are: Wratten M (Eastman Kodak); panchromatic, fairly slow, fine-grain, fairly contrasty. Wratten Panchromatic; panchromatic, about 40% faster than M, coarser grain, and less contrasty. Eastman Commercial; orthochromatic, slow, fine-grain, medium contrast. Hammer Slow (Hammer Dry Plate Co.); ordinary, fine-grain, slow, very contrasty.

Processing negatives consists in DEVELOPING, *i. e.*, reducing the light-exposed silver halide grains to silver, in a solution composed and used in accord with manufacturer's directions; FIXING by dissolving the unexposed and, therefore, unreduced silver halide grains; WASHING to remove soluble chemicals from gelatin; and DRYING. Time in and temperature of the developing solution, and the amount of agitation therein are the important variables in development. Much experience is necessary for good work, but passable proficiency is readily attained.

Papers are GLOSSY, SEMI-MATTE, and MATTE, according to smoothness and reflectivity of the surface; each type is available in four or five grades of contrast. Glossy papers are used almost exclusively for technical prints, since sharpness of detail is the desideratum.

Printing and processing of papers proceeds as follows: (1) Place negative with emulsion side up on a printer consisting of a rectangular box containing two or three lights and having a frosted-glass top underlain directly by a red-glass slide; place a paper, emulsion side down, on the negative, with a weight to keep the paper flat. (2) Expose paper by withdrawing red slide; time of exposure is determined by trial. (3) Develop, fix, and wash in water in accord with directions supplied with paper. (4) Place washed print, emulsion side down, on surface of a waxed and polished, enameled or chrome-plated steel sheet (FERROTYPE), squeeze out all excess water with a rubber roller, and allow to dry.

Bibliography. Recognition, source, and remedy of troubles connected with processing photographic materials, as well as numerous techniques, are thoroughly discussed in the following texts: Henney and Dudley, *Handbook of Photography*, Whittlesey House, McGraw-Hill Book Co., 1939; Neblette, *Photography, Principles and Practice*, D. Van Nostrand Co., 1938. Troubles arising from improper adjustment of the microscope have been discussed (p. 77). (See also, Allen, *Photomicrography*, D. Van Nostrand Co., 1941; Barnard and Welch, *Photomicrography*, Longmans, Green & Co., 1936; and C. P. Shillaber, *Photomicrography in Theory and Practice*, John Wiley & Sons, 1944.

Filters are transparent colored bodies of glass, gelatin, or solution that transmit almost exclusively light of a particular color. Interpretation of the black-and-white print of a colored object requires rendition of the various colors in some intermediate half-tone which conveys an impression similar to the colors of the object itself. Filters are used to produce the necessary half-tones, *e.g.*, a red object area adjacent to a white object area, when photographed, may appear too dark in the print, but when a red filter is used the relative brightness of these areas in the print is decreased (contrast decreased) since now only the red portion of the white light enters the lens system and affects the negative. The principle to be followed in selection of filters is to use a filter of approximately the same color as the object when a decrease in contrast is desired, and to use a filter of the complementary color to increase contrast.

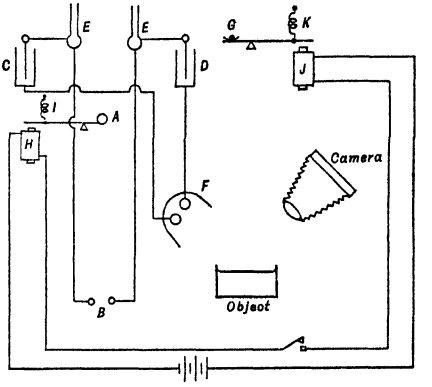

FIG. 87. Arrangement for photographing splashes (*after Worthington*).

High-speed photography is characterized by extremely short exposure times (10^{-4} to 10^{-7} sec.) and by the absence of mechanical shutters, shutter action being obtained by producing a light flash of short duration. Techniques and equipment vary depending upon whether the negative material is stationary or in motion.

The light source is a flash of light produced by the discharge of an electrical condenser through a gas-filled tube or gap. The condenser, connected to the electrodes, is charged just below the discharge potential of the gap; flashover takes place either by a sudden increase of potential in the condenser circuit, or by a dielectric breakdown in the gap. In Fig. 87, when ball A closes gap B, the condensers, comprising two Leyden jars, C and D, charged by terminals E of a Wimhurst machine, become series-connected, the potential across gap F doubles, and discharge takes place. In Fig. 88, an auxiliary circuit (TRIP

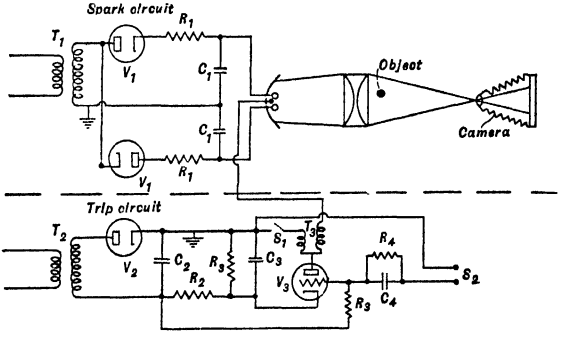

T_1 110 to 5,500-volt transformer.	R_2 10,000 ohms.
T_2 110- to 600-volt transformer.	R_3 100,000 ohms.
T_3 Spark coil, 30 : 1 ratio.	R_4 1 megohm.
V_1 Type 878 Kenotron.	C_1 6 mf.
V_2 Type 80 or 81 rectifier.	C_2 1 mf.
V_3 Type FG-17 Thyratron.	C_3 0.5 mf.
R_1 50,000 ohms.	C_4 0.0001 mf.

FIG. 88. Silhouette photography using spark and trip circuit (*after Edgerton, Germeshausen, and Grier*).

CIRCUIT) controls the instant of flash by applying a high potential at the desired time to a third electrode placed near the main gap; the spark from it to either or both of the main electrodes results in a dielectric breakdown of the main gap, which is immediately followed by discharge of condenser C_1. The intensity of the illumination depends upon the charging voltage and capacity of the condenser, the dimensions of the gap, and the nature of the electrodes; the duration depends upon the inductance of the discharge circuit, the resistance, the dimensions of the gap, and nature of the electrodes. Arc-type

sources using metal electrodes (magnesium, iron, copper, platinum, etc.), mercury-arc tubes, and gas-filled (argon, neon) tubes have been used. Magnesium arc gives a brilliant light flash of $<3\times10^{-6}$ sec. duration (Worthington, *A Study of Splashes*, Longmans, Green & Co., Ltd.), copper and platinum a less intense flash of about 10^{-7} sec. duration (Boys, *47 Nature 415, 440*), mercury-arc tubes (according to temperature of discharge) 10^{-5} to 10^{-6} sec. flash (Edgerton and Bermehausen, *3 Rev. Sci. Instr. 535*), and the gas-filled tubes a flash lasting about 10^{-5} sec., and of sufficient intensity to photograph a 6-sq. ft. area, using an $f/8$ stop on orthochromatic film.

Timing of the instant of flash may be accomplished in a variety of ways. In Fig. 87 ball A is released through the action of the magnet H and spring I simultaneously with release of liquid drop G through coaction of magnet J and spring K. By varying the height of ball A above gap B, the time of flash may be controlled to within 2×10^{-3} sec. The trip circuit of Fig. 88 may be energized either by mechanical or electrical closure of switch S_1 or by current input at S_2. For example, switch S_1 may be two wires that are knocked together by the object being photographed; this method was used by Edgerton in photographing a golf club hitting a ball. The flash was timed to within 10^{-4} sec. (See also Edgerton *et al.*, *22 ACerS 302*). Interruption by the object of a beam of light to a photoelectric cell or the impact of a sound wave, generated by the object, upon a piezoelectrical crystal microphone has been used to activate switch S_2 (Edgerton *et al.*, *8 J. App. Phys. 2*). The small photoelectric or piezoelectric current is put through an amplifying circuit, whose output terminals are connected to S_2. In either case, closure of a switch charges the grid of the Thyratron tube V_3, thus allowing condenser C_3 to discharge its energy into the primary of a step-up transformer T_3. The high voltage from the secondary is applied to the third electrode, which causes the dielectric breakdown. In studying fracturing of glass, Edgerton *et al.* (*24 ACerS 131*) used an electric circuit which delayed the instant of flash by a known interval of time after the switch was thrown; in this way fracture progress was followed.

Camera used may be any of the fixed-plate types; because of portability and larger negative size the Speed Graphic is most advantageous. Since the camera shutter is open for some time before and after the flash, work must be done in a darkened room to prevent fogging of the plate. Arrangement of equipment and photographic procedure are simple (*10 Rev. Sci. Instr. 378, 11 ibid. 184; 9 J. App. Phys. 362; NACA Report No. 429*). The camera is focused on the object or on a point in space that will be occupied by the object at the time of exposure. The lens is stopped down sufficiently to give the desired depth of focus. Light source and camera are arranged as in Fig. 87 for photography by reflected light and as in Fig. 88 for transmitted light or silhouette photography. In the latter case the collecting lens should be so located as to completely fill the ground glass of the camera; alignment of camera, lens, and light may be accomplished by following procedure on p. 88. When all adjustments have been made, the room is darkened, the tab of the plate-holder in position is removed, the camera shutter is set for time, opened, and the switch is thrown.

Stroboscopic illumination is obtained by using an oscillating trip circuit (Fig. 89). A neon-filled tube (STROBOTRON) is so arranged in the circuit that conduction through

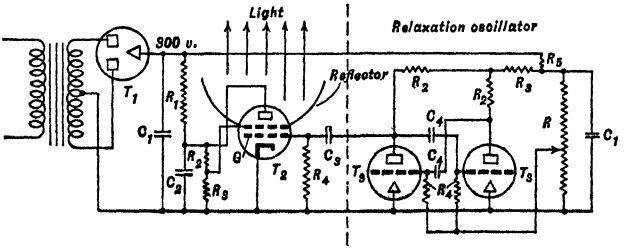

T_1 83V tube.	C_3 0.001 μf.	R_2 100,000 ohms.
T_2 Strobotron No. 631-Pl.	C_4 0.02 μf. for low range; 0.005 μf. for high range.	R_3 50,000 ohms.
T_3 53 tube.	R_1 3,500 ohms.	R_4 1 megohm.
C_1 8 μf.		R_5 10,000 ohms.
C_2 4 μf.		R 100,000 ohms.

FIG. 89. Adjustable-frequency stroboscopic illuminator (*after Germeshausen and Edgerton*).

the tube cannot take place until the potential difference between the grids exceeds the starting potential of the tube; at such time condenser C_2 is discharged through the tube. The necessary potential difference between the grids is obtained by periodically impressing

a negative potential on grid G by means of the oscillator circuit. The oscillator may be operated within two frequency ranges by changing the circuit constants of the grid circuits of the oscillator, variation within each range being obtained by varying resistance R. With $C_4 = 0.02\mu f$, frequency range is 10 to 60 cycles per sec., when $C_4 = 0.005\mu f$, 40 to 240 cycles. The intensity of the illumination is not very high, hence when more intense lighting is required this circuit may be used to trigger a more intense illuminant. General Radio Co. manufactures stroboscopic equipment such as described.

Multiple-exposure photography, made possible by the use of a stroboscopic illuminator, requires a dark background on which is disposed a brightly illuminated object. If the object whose motion is to be studied is a good reflector of light, all that is required is to place the object M (Fig. 90, item a) in front of a black background and arrange light I and camera C as shown, with a scale S in the plane of the object. If the object is transparent and anisotropic, and requires illumination by transmitted light, a dark background may be obtained by placing two polaroid disks P (item b) in crossed position; only light passing through the object will reach the camera lens. In both methods it is advisable to work in a dimly lighted room, using a fixed-negative camera (miniature, or Speed Graphic), with shutter set at time.

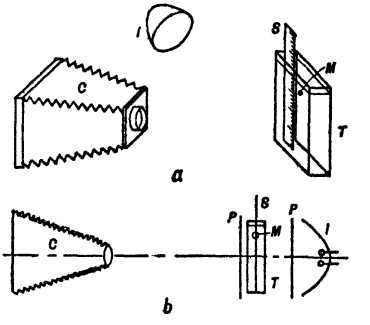

FIG. 90. Arrangement for multi-exposure photography.

Both arrangements have been used successfully (*CU*) to study free-settling characteristics of particles in liquids. Cell T should have parallel faces. Illuminator I should be arranged so that no reflections appear in the ground glass of the camera when focusing on the scale S. A mirror placed in front of the cell intensifies reflections. When ready to expose, dim the room, start the stroboscope, open shutter, set at time, and release the particle M; when the particle has reached the bottom of cell, close shutter.

Interpretation of the print requires determination of the distance between images as obtained from the scale included in the field of view, and of the time elapsed between images as obtained from the known frequency of the light flashes. The images corresponding to the acceleration period of the falling particle overlap, hence interpretation is difficult. However, if the camera is mounted on a tripod equipped with a rotating head, movement of the camera through a small arc will spread the images of the acceleration period. The camera axis must be perpendicular to the plane of object motion.

High-speed motion-picture photographs may be taken using a continuous light source (see p. 89) or an interrupted (stroboscopic) illuminator; in the latter case timing of the flashes may be achieved by the use of a contactor mounted on the sprocket shaft of the camera or by the use of an oscillator trip circuit. When the oscillator is used to control frequency of light, the time interval between light flashes must be equal to the time interval between successive frames on the moving negative. If the camera does not accelerate rapidly to some constant speed, overlap between successive frames at the beginning of the reel will take place. Edgerton (*54 EE 149*), using the contactor method, mounted the commutator on the shaft of the sprocket outside the camera body, and used stranded copper brushes, pressed against the commutator by springs, to eliminate vibrations and bouncing, which produce improper spacing of the frames. The camera was otherwise a normal high-speed camera, capable of taking 1,200 @ 35-mm. pictures per sec. A time record was made at the side of the film by a spark whose frequency was controlled by a 60-cycle oscillator.

Fluorescence of minerals resulting from excitation with ultraviolet light is used as an aid in mineral identification both in the laboratory and in the mill. Fluorescence depends upon the atomic structure of the mineral and the wave length of the radiation; it results from an absorption of the invisible incident radiation followed by conversion and re-emission as visible light of a particular wave length (color). Some minerals fluoresce when excited by radiation in the short end of the ultraviolet region but not with radiation from the long end and *vice versa;* some minerals undergo a fluorescent color change when excited by radiation from the two ends of the range, *e.g.*, Bohemian apatite gives white fluorescent light for short rays and brown for the long rays. Mineral identification in the mill is effective only with strongly fluorescent materials, since the mill is normally well lighted. Iron or mercury arcs equipped with filters transmitting in the ultraviolet range mounted over a picking belt or a concentrator may be used to identify the following minerals: Anglesite (yellow), apatite (white, yellow or brown, depending on locality and wave length), cerussite (pale blue or yellow according to locality), dolomite

(white or blue-white depending on locality and wave length), aragonite (white, pink, red, or green), calcite (pink to bright scarlet red, depending on Mn content), fluorite (blue), gypsum (green), scheelite (blue), sphalerite (orange), willemite (green depending on Mn content). For a more detailed listing, including weakly fluorescent minerals, see H. Dake and J. de Ment, *Fluorescent Light and Its Applications*, Chemical Publishing Co., 1941. See also Sec. 14, Art. 3.

10. CHEMICAL AND ELECTRICAL TESTING

Chemical testing of the nature of a material comprises primarily assaying, and qualitative chemical tests, both macroscopic and microscopic. These are specialized arts covering which there is an excellent literature. A brief bibliography follows:

Assaying

1. *Fire Assaying*, Shepard and Dietrich; McGraw-Hill Book Co., 1940.
2. *Textbook of Fire Assaying*, Bugbee, John Wiley & Sons, 1940.
3. *Manual of Fire Assaying*, Fulton and Sharwood, McGraw-Hill Book Co., 1929.
4. *Technical Methods of Ore Analysis*, Low, Weinig and Schoder, John Wiley & Sons, 1939.
5. *Select Methods of Metallurgical Analysis*, Naish and Clennell, John Wiley & Sons, 1930.
6. "Spectrographic Assaying; Molybdenum Analyses; Chromium and Cobalt Analyses," *RI 3370*.

Chemical Analysis

For particular chemical tests used in process testing see:

1. *Analytical Chemistry*, F. P. Treadwell and W. T. Hall, 2 vols., John Wiley & Sons, 1942.
2. *Textbook of Quantitative Inorganic Analysis*, I. Kolthoff and E. Sandell, Macmillan Co., 1943.
3. *Spot Tests*, F. Feigl, Academic Press, 1939.
4. *Microtechnique of Inorganic Analysis*, A. Benedetti-Pichler, John Wiley & Sons, 1942.
5. *Applied Inorganic Analysis*, W. Hillebrand and G. Lundell, John Wiley & Sons, 1929.
6. *Organic Analytical Reagents*, J. Yoe and L. Sarver, John Wiley & Sons, 1941.
7. *Semimicro Qualitative Analysis*, A. Middleton and J. Willard, Prentice-Hall Inc., 1939.
8. *Qualitative Organic Analysis*, O. Kamm, John Wiley & Sons, 1932.

Radioactive tracer atoms have been used for a considerable variety of chemical and physical researches, *e.g.*, determination of surface area, diffusion in minerals (*7 ZP 13*), crystal habit and growth (*Hahn; Paneth*), co-precipitation, adsorption, electrochemical exchange, etc. Its applicability is limited only by the imagination of the investigator. It is particularly suited to any problem in which minute quantities are involved. The method depends upon the fact that radioactive elements, either natural (radium, thorium, etc.) or artificial (S, C, P, etc.) disintegrate spontaneously with emission of α (doubly charged helium ions), β (electrons), and γ (*X*-ray) radiation, and that such radiation can be measured with extreme accuracy. It is independent of any physical or chemical condition or the age of the substance; it is mathematically described by $N = N_0 e^{-ft}$ where N = number of atoms at time t, N_0 = number of atoms at reference time $t = 0$, and f (disintegration constant) = fraction of the total number of atoms disintegrating in unit time, obtainable from published tables.

Detection of radioactive atoms is accomplished by utilizing the effect of the emitted radiations in making an air gap conductive and so discharging a gold-leaf electroscope or the like. Rate of discharge of the electroscope depends upon the number of disintegrating atoms fN; when f is known, discharge rate measures the weight of radioactive element. The method is readily sensitive to 10^{-12} gm. of thorium C, and 10^{-17} gm. may be determined (*Hahn*).

Basis of method is the fact that the radioactive atom possesses identical chemical properties with the inactive atom. Hence if thorium B, the radioactive lead isotope, is mixed with a known weight, say 0.01 gm., of inactive lead and the activity of the resulting mixture is determined to be, say, 1,000,000 units, each unit of thorium B represents 10^{-8} gm. of lead.

Experimental method depends upon the problem; in all applications electroscopic determination of active atoms is substituted for chemical determination of inactive atoms.

Solubility of lead chromate (*82 Z anorg C 322; 89 ZPC 294, 303*) was determined by preparing pure lead chromate by the usual chemical methods from a mixture of lead and thorium B, and subjecting the salt to the normal gravimetric solubility method. A known volume of the saturated solution was evaporated and the activity of the residue was determined. The units of activity multiplied by the ratio of inactive to active lead and divided by the volume of solution evaporated gives grams of lead dissolved per unit volume of solvent.

Flotation collection (*CU*). Two lots of lead ethyl xanthate were prepared, one using thorium B (Pb^R) and one radioactive S (S^R). A sample of <200-m. galena was shaken with the filtrate from a suspension of $PbEtX_2^R$ for 15 min., filtered, and the activity of the filtrate determined; it was found

that no EtX^R ions remained therein. A similar test, using PbR_2 showed no loss of activity of the filtrate. The conclusion is that xanthate ions reacted with the galena surface; not that molecular lead xanthate adsorbed thereon.

Electrical tests supply information as to magnetic permeability and electrical conductivity. Neither piece of information is of any great utility, however, so far as identification of the mineral is concerned, except perhaps in so far as high susceptibility is a simple test for magnetite. The significant utilities of electrical tests are in process testing (Art. 22).

11. RESISTANCE TO COMMINUTION

The resistance of a rock to comminution is of major importance both as respects coarse and fine reduction (see Secs. 4, 5, 6). Much work has been done in the attempt to quantify such resistance.

Crushing. So far as crushing is concerned, all useful work to date boils down to determination of crushing resistance as compared with that of medium limestone, tests being made, if at all, by compression in an ordinary materials-testing machine. The more usual procedure is to determine the lithological class of the material and then refer to some comparative tabulation such as Table 3, Sec. 4. Laboratory crushing tests that are to be used as a basis of mill installation are about 5% manipulation and 95% interpretation based on experience, in any case, and an experienced investigator, with a few lumps of the unknown and some known rocks and a hammer and anvil, can tell more than an inexperienced man with a most complete laboratory crushing equipment.

Grindability is defined broadly as the resistance of a material to fine comminution. Experience has taught, however, that determinations of such resistance, whether expressed in absolute or relative units, are to be used with caution; that translation from laboratory to mill must, in fact, be limited to mills of the same type as those in which the tests were performed, grinding to the same *mog*, and under the same moisture conditions, and that even then it is wise to allow a generous factor of safety, and is much more comfortable to have a reasonably comparable plant performance as a check.

On the other hand, the establishment of a scientific basis for a measure of grindability and a method for its determination would make it possible, with suitable performance data, to select grinding equipment accurately, and to prescribe the proper degree and character of grinding for optimum metallurgical results.

Unit of grindability should be based on a valid law of crushing. Many so-called laws have been proposed (*98 J 905, 945*), the most popular being those of Rittinger and of Kick (*Ed. 1, 489*). RITTINGER proposed that *the energy required for crushing is directly proportional to the increase of the surfaces exposed*, whereas KICK postulated that *the energy required for producing analogous changes of configuration in geometrically similar bodies of equal technological state varies as the volumes or weights of these bodies.* The work of Gross and Zimmerley (*87 A 7, 27, 35*) appears to have confirmed Rittinger's law, hence the grindability G is taken by them as the constant in Rittinger's law, or

$$G = A_S/E \qquad (37)$$

where A_S = new surface produced, and E = energy consumed in its production; in c.g.s. units G is expressed in terms of sq. cm. per erg. The magnitude of G depends upon the elastic constants and the ultimate strength of the material; these depend, in turn, upon the magnitude, direction, point, and rate of application of the force or forces producing breakage.

Measurement of grindability, if direct, is predicated upon an ability to determine the surfaces of crushed materials and the energy consumed in crushing alone; if indirect, upon some measurable related property. There is no method for measuring the absolute surface of a powder; even the so-called direct methods (Art. 17) measure only properties related to surface. Measurement of energy actually consumed in comminution is more nearly successful, although there is room for improvement (*vide infra*). Thus determination of absolute grindabilities is, at present, impossible. There is some evidence that in some methods of measurement, true surface area bears a constant relation to the measured surface area; *i.e.*, the ratio of true surface areas approximates closely the measured ratio. If this be true, the ratio of measured grindabilities (RELATIVE GRINDABILITY) closely approximates the ratio of true grindabilities. Many investigators make no attempt to measure true energy of crushing, but content themselves with the measurement of some related energy in the hope that the two stand in constant relation, *e.g.*, the energy input to a ball mill has been assumed to bear a constant ratio to the energy consumed in grinding because standardization of grinding conditions was practiced. See also *Bul 408 USBM.*

Drop-weight method (*87 A 7*) consists in crushing a sample in a drop-weight machine, calculating the energy consumed in crushing, and determining the new surface produced by a dissolution method. The machine comprises a steel mortar *m* (Fig. 91), 3 in. diameter by 3 in. high, with a crushing chamber *c*, 1 in. diameter by 1/2 in. deep (4-gm. capacity),

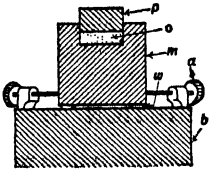

FIG. 91. Drop-weight mortar (*after Gross and Zimmerley*).

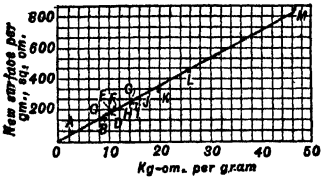

FIG. 92. Grindability of quartz (*after Gross and Zimmerley*).

neatly fitted with a steel plunger *p*, 1/2 in. long. The mortar is centered on a 6(diam.)×8-in. anvil block *b* by three screws *a*. Three aluminum wires *w*, 3.232 mm. in diameter and 1 cm. long, spaced 120° radially, are placed between the mortar and the anvil block. Maximum drop is 60 cm.; 1.3600-, 2.050-, and 2.935-kg. balls were used.

Table 25. Relative grindability by the drop-weight method (*after Gross*)

Material	Surface produced; sq. cm. per ft.-lb.	Relative grindability
Quartz	243	1.00
Pyrite	314	1.29
Sphalerite	779	3.21
Calcite	1,054	4.34
Galena 1	1,256	5.17
Galena 2	1,372	5.65
Ore 1 *a*	507	2.09
Ore 2 *b*	525	2.16

a 15.8% galena, 12.7% sphalerite, 32.8% pyrite, 38.7% gangue.

b 15.9% galena, 14.3% sphalerite, 43.9% pyrite, 25.9% gangue.

Energy absorbed by the aluminum wire was assumed to be denoted by deformation with an unloaded mortar. A smooth calibration curve was obtained. Deformation with a sample in place was measured and the calibrated energy value therefor was deducted from the calculated energy of the drop to give energy input in crushing. In making a test, a weighed sample was moistened with absolute alcohol to prevent dust loss, placed in the crushing chamber, and leveled off; the plunger was in position, the mortar was placed on the aluminum spacers and centered, the ball was suspended at proper height with the suspension cord passing through a guide to prevent lateral displacement on severance; when ball was perfectly quiet, the cord was cut. Thereafter deformation of the aluminum spacers was measured. Surface of the sample before and after crushing was determined by hydrofluoric acid leaching (Art. 17). Results of a number of such tests on quartz are plotted in Fig. 92. The straight line indicates proportionality between calculated energy input and calculated surface; its slope is the grindability of this quartz, 0.25 sq. ft. of new surface per ft.-lb. Martin *et al.* (*25 CerS 63*) using a ball mill for grinding, but a similar dissolution method for surface estimation, arrived at a grindability of 0.0164 sq. ft. per ft.-lb. Table 25 gives relative grindabilities of a number of minerals determined by the drop-weight method. Surfaces for all minerals except quartz were calculated from sizing and elutriation tests, using factors assumed to account for variations in shape and density (*RI 2948*).

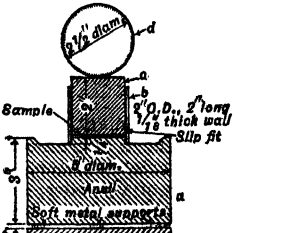

FIG. 93. Wilson drop-weight mortar.

Another drop-weight machine (Wilson, *A TP 810*) is shown in Fig. 93. Anvil *a* is of hardened tool steel machined flat on the lower surface and to the shape shown on the upper surface. The boss is machined to fit snugly but not tightly inside the guide tube *b*. The plunger *c* is made of hardened tool steel, machined to the same diameter as the boss. The surfaces of plunger and boss are polished with fine emery after hardening. Spacers of 1/8-in. solder wire cut in 0.4-in. lengths and slightly flattened to a thickness of 0.1 to 0.11 in. are used. The ball *d* is polished steel; its release is controlled by an electromagnet. Using the Wagner turbidimeter (Art. 17) for surface determination, Wilson reported grindabilities for different clinkers which ranged from 3.54 to 4.94 sq. cm. per kg.-cm.

Pendulum crusher (*134 A 296*) was used by Bond and Maxson to eliminate absorption of energy by the supports of the crushing chamber. The apparatus consisted of a mortar fitted into the pendulum of an Amsler pendulum impact-testing machine. The energy of the falling pendulum was transmitted through a standard test bar, which was broken in tension in each test. Residual energy was

determined by measuring the height to which the pendulum rose after crushing. The procedure necessitates test bars of constant tensile strength, and measurement of residual energy in the pendulum, but Bond and Maxson report close checks on blank determinations with these test bars, somewhat at variance with the normal results in physical testing laboratories. Using the method described in Art. 17 for calculating surface from sizing analyses, Bond and Maxson report the following grindabilities in sq. meters per joule: 0.00339 for NEW CORNELIA ore, 0.00326 for LITTLE LONG LAC ore, 0.002165 for SPRINGS MINES ore, and 0.001315 for petroleum coke from ALCOA, Tenn.

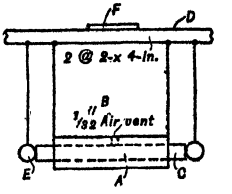

FIG. 94. Pendulum crusher (*after Bond*).

Bond (*PC*) describes a new device (Fig. 94). Crushing chamber *A* is made of round stock, drilled, hardened, and lapped and has a 1/32-in. hole *B* drilled radially at its center. Pistons *C*, made of polished very hard tool steel, fit neatly in the block, which is suspended from frame *D*. Two highly polished hardened steel balls *E* are so suspended that they just touch the piston ends when sample powder is in the crushing zone. Prior to release the balls are held in the horizontal position by means of a string which runs over cutting block *F*. To release, the string is cut by pressing a razor blade against the cutting block. The balls strike simultaneously, thus producing very little movement of the suspended block.

Gaudin (*PC*) describes a device (Fig. 95) consisting of two heavy pendulums *A*, released by electromagnets *B*, which can be set at different positions on circular tracks *C*, thus controlling the height through which the pendulums fall. Mineral samples contained in thin cellophane bags, suspended at the meeting point of the pendulums, are crushed between them. A metal guard *D* surrounds the crushing zone and prevents loss of crushed material, which falls into hopper *E*. Rebound after the first impact is determined by the trace of styli attached to the pendulums. Subsequent collisions are prevented by a weight *F* released by magnet *G* which drops between the pendulums.

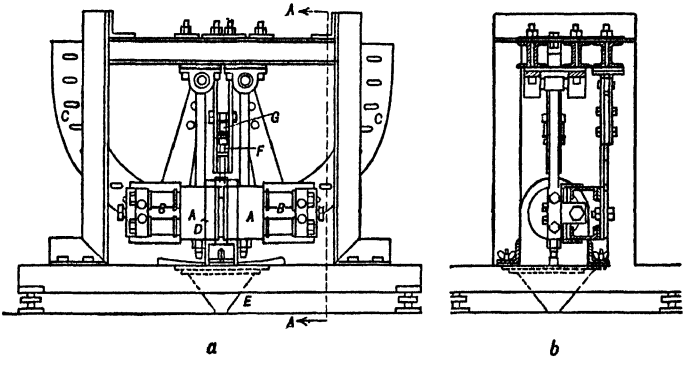

FIG. 95. Pendulum crusher (*after Gaudin*).

Methods assuming constant useful work. Numerous methods have been used to determine grindability wherein the work used in crushing is assumed constant. Lennox (*61 A 237*) used an 8×12 1/2-in. ball mill charged with 3,450 gm. of 3/4-in. balls, 1 lb. of ore prepared to a standardized size distribution, and 1 lb. of water. The mill was rotated for a standard time at 84 r.p.m., after which the product was removed and sized by screens. On the assumption that the energy input to the mill was constant and that a constant fraction thereof was used in crushing, relative grindabilities are equal to the ratios of the surfaces produced. Lennox calculated surface produced on the mesh-ton basis (Art. 19). His results are invalidated by the assumption made that the <200-m. material in the feed has the same surface value as the corresponding weight of <200-m. material in the product, which is not true.

The same assumptions of constancy of work put into the grinding machine by grinding for a definite time, and of constancy of work used in crushing, are made in the A.S.T.M. tests (*D408–37 T*) for grindability of coal. The first test, after Yancey (*108 A 267*), prescribes an 8×8-in. cylindrical ball mill equipped with 3 @ 7/8-in. square lifters and charged with 100 @ 1-in. steel balls and 500 gm. of 10~200-m. coal. The mill is rotated for a given number of revolutions at a fixed speed. The product is removed and screened on a 200-m. screen; enough <10-m. feed is added to bring the charge to 500 gm. and the previous grind and screening are repeated twice with an intermediate replenishment. The weight of the total <200-m. product in gm. is the grindability. Hertsog *et al.* (*TP 611 USBM*) describe a similar test except that there is no replenishment and the cycles are continued until 80% of the original feed passes the 200-m. screen. The grindability index is the number of revolutions of the mill required to produce this constant fineness.

The second A.S.T.M. test, after Hardgrove (*54 ASME 37*) utilizes a small ball-bearing pulverizer (Sec. 6, Art. 2) with eight 1-in. balls. Ball pressure, supplied by dead weights, is held at 64-lb. total weight. A 50-gm. sample of 16~30-m. coal is charged and the mill is run for 60 revolutions. Product is screened on a 200-m. sieve. The Hardgrove grindability index is defined as 13 *plus weight of undersize in gm. multiplied by* 6.93.

Coe and Coghill (*RI 3704*) used a form of laboratory dry pan (*149 A 231*) to grind in closed-circuit with an air separator, which could be set to finish at a limiting size as coarse as 28-m. or finer than 400-m. No attempt was made to control circulating load. Hp-hr. per ton required to grind to the same limiting size is their grindability index. Their results are summarized in Table 44, Sec. 5.

Maxson, Cadena, and Bond method (*112 AIME 130*) is a variant of the Yancey procedure, as designed to simulate a dry-grinding ball mill in closed-circuit with a screen under 250% circulating load. Procedure follows: A 40-lb. sample is crushed through rolls in closed-circuit with a 6-m. screen. A sample of the product is placed in a graduate and compacted by shaking to determine bulk weight. A unit volume (700-cc.) is charged to a 12×12-in. cylindrical ball mill, with 285 @ 1 1/2~3/4-in. balls and ground for a given number of revolutions at 65.8 r.p.m. Contents are removed and screened for 10 min. on the screen at which grindability is to be determined, using a Ro-tap (Art. 12). Screen undersize should be 28.6% of the weight of the unit volume for a circulating load of 250%, and, if it does not amount to this, it is returned to the charge and further ground for a number of revolutions calculated as necessary to produce this percentage, on the basis of the first grind. The product is again screened, and if the undersize is the right percentage, it is removed and the oversize is replenished with original feed to make a unit charge, and is returned to the mill, which is now run for the preceding total number of revolutions. Grindability index is the weight in gm. of material ground through the specified screen per revolution after this weight has become constant.

Rod-mill grindability is tested in a 12×22-in. mill equipped with wave-type liners. The tumbling charge consists of 6 @ 1 1/4×21-in. rods and 2 @ 1 3/4×21-in. rods. Speed is 46 r.p.m. Feed is usually <1/2-in., but with soft ores may be coarser. Unit charge is 1,250-cc. of dry solids, compacted by shaking. Tests are run at a 100% circulating load. The mill is so mounted that it can be tilted through a complete circle; it is discharged through a trunnion bearing and a grate which retains the rods. In operation, the mill is tilted, at 10-revolution intervals, 5° in one direction for one revolution and 5° in the other direction for one revolution, to prevent escape from grinding by lodgment between the ends of the rods and the heads of the mill. Procedure is the same as in ball-mill grindability testing.

Results of many tests are given in Tables 46 and 47, Sec. 5.

Validity of the per cent.-passing grindability unit determined in a given machine under constant conditions of operation depends upon the validity of three assumptions, *viz.*, (*a*) energy input per revolution is constant, (*b*) the same fraction of this energy is used in grinding, regardless of the nature of the material, and (*c*) the undersize of a given screen has the same surface per unit of weight irrespective of the material. Bond's calculation of surface (see Art. 18) hinges on the assumption of a grind limit. Using this method Bond and Maxson (*112 A 146*) calculated that the energy per revolution consumed in crushing was constant to within 10% regardless of the screen size used in the determination, the circulating load, and the nature of the material (see Table 26). Assumption *b* has thus been shown to be reasonably correct; consequently the validity of assumption *a* is of less concern, though even this assumption is probably correct under the conditions of this test (*RI 3056*).

Efficiency of ball mill operation has been calculated by Bond and Maxson, Gross and Zimmerley, and Wilson *et al.* (*loc. cit.*) on the basis of grindability indexes. The method follows: Net surface production of the mill is determined by measurement or by calculation from screen analyses. This figure is divided by the grindability expressed in units of surface per unit of work, the result being total energy used in grinding. The energy input to the mill is determined from power readings on the motor driving the mill, or more directly by a Prony brake or the Gross and Zimmerley integrator (*RI 3056*). The ratio of energy used in crushing to the energy input is defined as efficiency. Some investigators subtract the energy consumed by the empty mill from the input energy and use the difference in the efficiency calculation. Gross (*loc. cit.*) applied this method to a 2-stage plant circuit grinding an ore consisting of galena, sphalerite, and pyrite in a siliceous gangue and obtained efficiencies of 47% for the primary and 42% for the secondary mill. His grindability index was based on a drop-weight figure for quartz. Bond and Maxson (*loc. cit.*) cite an average figure of 64% for commercial closed-circuit wet grinding. Wilson's figures (*loc. cit.*) for grinding clinker range from 20 to 43%. These figures stand or fall upon the correctness of the assumption that grindabilities determined by the drop-weight or impact-tester methods are the same as grindabilities determined in some other device

wherein the method of breaking more nearly simulates comminution in the ball mill. There is no direct evidence in favor of this assumption; it would appear invalid, since the strength of materials varies according to whether they are loaded in compression, tension, or shear.

Table 26. Energy consumed in crushing (*after Bond and Maxson*)

Mesh tested	Ore	Circulating load, %	Net grams per revolution	Slope of distribution line	Per revolution	
					Sq. meters	Joules
28	New Cornelia	250	2.50	0.77	0.1821 *a*	53.85 *b*
35		250	2.31	0.82	0.1778	52.60
48		250	2.10	0.925	0.1575	46.58
65		250	2.02	0.98	0.1645	48.60
100		250	1.57	1.025	0.1764	52.12
200		250	0.942	1.05	0.1614	47.70
65		150	1.83	0.95	0.1813	53.61
65		250	2.02	0.98	0.1645	48.60
65		400	2.33	0.96	0.1876	55.50
65		800	2.39	1.02	0.1696	50.18
Averages				0.945	0.1731	51.19
35	Little Long Lac	250	2.35	0.80	0.1793	54.95
48		250	1.875	0.825	0.1741	53.41
65		250	1.49	0.85	0.1726	52.95
100		250	1.15	0.89	0.1731	53.09
150		250	1.08	0.93	0.1759	53.93
200		250	0.903	0.96	0.1734	53.16
Averages				0.876	0.1747	53.57
28	Springs Mines	250	3.22	1.14	0.1103	50.95
35		250	2.404	1.07	0.1155	53.30
48		250	1.985	1.18	0.1132	52.75
65		250	1.717	1.272	0.1102	50.85
100		250	1.323	1.32	0.1127	52.05
150		250	1.117	1.30	0.1160	53.55
200		250	0.859	1.31	0.1122	51.80
Averages				1.227	0.1129	52.11

a Calculated by Eq. 79, using values of slope given in preceding column.

b Obtained by multiplying sq. meters per revolution by grindability of ore as given in Sec. 5, Tables 46, 47.

Selection of grinding mills is based upon relative grindabilities and operating performances. The ore for which a grinding mill is to be chosen is compared, by means of grindability tests, to other ores for which complete performance data are available. It is thus located between two ores on the grindability scale. From performance data on the reference ores the total energy required to grind the desired tonnage to the desired *mog* is obtained by interpolation. This energy divided by the time allowed for grinding the desired tonnage gives the power required to drive the prospective mill. A mill, or mills, drawing this power is then selected. Its type and proportions are based on other considerations (see Secs. 5, 6).

SIZE TESTING

Sizing analyses may comprise either physical separation of a mass of particles of mixed sizes into grades, each of which is characterized by a relatively small size interval between the largest and smallest particles; or the making of measurements, without actual physical separation, in such a way that by proper methods of interpretation they may be translated into statements of size and size distribution. Methods of physical separation are (*a*) screening and (*b*) elutriation; methods not involving actual separation are (*c*) microscopic sizing, (*d*) sedimentation, and (*e*) various methods for estimating surface, *e.g.*, turbidimetry, Tyndallometry, surface reaction, surface friction, and surface electrical effects. By these methods a complete size analysis can be made, ranging from any maximum down to molecular dimensions; measurement by calipers or the like is applicable from any maximum to about 3- or 4-in.; sieving applies from 3- or 4-in. to about 37-μ; elutriation, from 50- or 60-μ to about 3- or 5-μ; sedimentation, from 5- or 10-μ to about 1-μ; centrifuging, from, say, 2-μ to molecular dimensions. If liquids other than water are used in elutriation or sedimentation the limits may be changed.

There is no direct method of sizing. Microscopic measurement comes nearest to the absolute; its failure is not methodological but is due to inability, on the part of the operator, to specify what dimension is measured. Each irregular fragment has an infinity of dimensions, and if one is chosen for a particular grain it is ordinarily impossible to specify the corresponding dimension in another grain. Maximum and/or minimum dimensions can be specified, but their measurement is uncertain. Sieving is sometimes called a direct method of sizing, yet it is sought only to place a particle in a group the upper and lower limits of which are specified. The dimension presumed to be measured is the intermediate. Other methods of sizing seek to place a grain in a group such that its settling velocity in a fluid shall fall between specified limits. Size measurement is then obtained by calculating the diameter of a sphere having a falling velocity in the fluid the same as that of the particle. Since the dependence of velocity upon size, shape, density, etc., is not too well known, the results are approximations at best.

12. SCREEN ANALYSIS

Testing sieves used for screen analysis are circular pans, 6 to 18 in. diameter and 1 to 3 1/4 in. deep, with screen bottom. The frame is ordinarily made of brass with upper edge beaded on a stout wire and lower edge extended beyond the screen, crimped inward, and rolled to an easy fit with the upper edge of the other screens in the set, in order that the screens may be nested. Pans to collect undersize and covers to confine oversize may also be obtained; their use decreases dust loss. TELESCOPE NESTS, usually made with each finer screen of sufficiently smaller diameter than the preceding to permit telescopic packing, are made for field use. The pan of a telescope set is of such diameter as to receive the nested set.

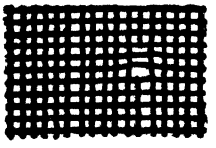

FIG. 96. Microphotograph of 200-m. screen cloth, magnified 12.5 diameters (warp wires vertical).

Standard testing sieves. The U. S. Bureau of Standards has done considerable work in the study of fine testing sieves and their performance in connection with the determination of the fineness of cement. The work early showed the irregularities in fine cloth (Fig. 96) and the first specification of a standard was designed to overcome these irregularities by setting up tolerances in diameter of wire and their spacing (*USBS Circ. 39*). Subsequent specifications (*USBS TP 29, 42*) allowed larger tolerances as to mechanical construction, placing emphasis on performance. Recent specifications covering woven-wire sieves, round-hole screens and square-hole perforated plate screens for precision testing are *ASA No. Z 23.1–1939* and *ASTM E 11–39*.

Specifications for woven-wire sieves:

(*a*) Woven cloth for standard sieves shall be woven (not twilled, except the cloth of the 62-, 53-, 44-, and 37-micron sieves) from brass, bronze, or other suitable wire and shall not be coated or plated.

(*b*) The average opening between the adjacent warp and the adjacent shoot wires, taken separately, shall conform to that given in column 2 of Table 27, within the "permissible variation in average opening" given in column 4. Column 3 gives the approximate equivalent in inches of the basic values in millimeters given in column 2. The average diameter of the warp and of the shoot wires, taken separately, of the cloth of any given sieve shall be within the limits given in column 6. Column 7 gives the approx. equivalents in inches of the basic values in millimeters given in column 6. The maximum width of opening between adjacent warp and shoot wires shall not exceed the nominal width of opening by more than the "permissible variation in maximum opening" given in column 5. An exception may be made, in the case of 8-in. sieves, if the total length of all the portions of rows of openings exceeding this minimum width is less than 4 in. in both the warp and shoot directions, considered separately, provided that the sieve is not rejected under Paragraph (*d*). For sieves from 1,000-micron (No. 18) to the 37-micron (No. 400) size, inclusive, not more than 5 per cent. of the openings shall exceed the nominal opening by more than one-half of the permissible variation in maximum openings.

(*c*) Both the warp and shoot wires shall be crimped in such a manner that they will be rigid when in use.

(*d*) There shall be no punctures or other obvious defects in the cloth.

Calibration of woven-wire sieves. The method employed by the Bureau of Standards is detailed in the appendix to the above cited standard. The Bureau of Standards will test sieves to determine conformity to specifications.

Sieve scales. If a piece of substantially homogeneous rock is broken by any of the usual methods of crushing and the product divided into a number of grades according to size, it is found that the weights of the grades change gradually from size to size (Fig. 97), that they pass through a maximum in one of the coarser sizes, and, sometimes, through a

Table 27. Specifications of woven-wire cloth of standard sieves

Size or sieve designation	Sieve opening		Permissible variations in aver. opening, per cent.	Permissible variations in maximum opening, per cent.	Wire diameter	
	Mm.	In. (approx. equivalents)			Mm.	In. (approx. equivalents)
(1)	(2)	(3)	(4)	(5)	(6)	(7)
Coarse series						
(4.24-in.)**	107.6	4.24	±2	+3	5.6 to 9.7	0.220 to 0.380
4-in.	101.6	4.00	±2	+3	5.6 to 9.7	0.220 to 0.380
3 1/2-in.	88.9	3.50	±2	+3	5.3 to 9.3	0.210 to 0.365
3-in.	76.2	3.00	±2	+3	4.8 to 8.1	0.190 to 0.320
2 1/2-in.	63.5	2.50	±2	+3	4.4 to 7.1	0.175 to 0.280
(2.12-in.)**	53.8	2.12	±2	+3	4.1 to 6.2	0.160 to 0.245
2-in.	50.8	2.00	±2	+3	4.1 to 6.2	0.160 to 0.245
1 3/4-in.	44.4	1.75	±2	+3	3.8 to 5.7	0.150 to 0.225
1 1/2-in.	38.1	1.50	±2	+3	3.7 to 5.3	0.145 to 0.210
1 1/4-in.	31.7	1.25	±2	+3	3.5 to 4.8	0.140 to 0.190
(1.06-in.)	26.9	1.06	±3	+5	3.43 to 4.50	0.135 to 0.177
1-in.	25.4	1.00	±3	+5	3.43 to 4.50	0.135 to 0.177
7/8-in.	22.2	0.875	±3	+5	3.23 to 4.22	0.127 to 0.166
3/4-in.	19.1	0.750	±3	+5	3.10 to 3.91	0.122 to 0.154
5/8-in.	15.9	0.625	±3	+5	2.74 to 3.43	0.108 to 0.135
(0.530-in.)**	13.4	0.530	±3	+5	2.39 to 3.10	0.094 to 0.122
1/2-in.	12.7	0.500	±3	+5	2.39 to 3.10	0.094 to 0.122
7/16-in.	11.1	0.438	±3	+5	2.23 to 2.84	0.088 to 0.112
3/8-in.	9.52	0.375	±3	+5	2.11 to 2.59	0.083 to 0.102
5/16-in.	7.93	0.312	±3	+5	1.85 to 2.36	0.073 to 0.093
(0.265-in.)**	6.73	0.265	±3	+5	1.60 to 2.11	0.063 to 0.083
1/4-in. (No. 3)	6.35	0.250	±3	+5	1.60 to 2.11	0.063 to 0.083
Fine series						
5,660 micron (No. 3 1/2)	5.66	0.223	±3	+10	1.28 to 1.90	0.050 to 0.075
4,760 micron (No. 4)	4.76	0.187	±3	+10	1.14 to 1.68	0.045 to 0.066
4,000 micron (No. 5)	4.00	0.157	±3	+10	1.00 to 1.47	0.039 to 0.058
3,360 micron (No. 6)	3.36	0.132	±3	+10	0.87 to 1.32	0.034 to 0.052
2,830 micron (No. 7)	2.83	0.111	±3	+10	0.80 to 1.20	0.031 to 0.047
2,380 micron (No. 8)	2.38	0.0937	±3	+10	0.74 to 1.10	0.0291 to 0.0433
2,000 micron (No. 10)	2.00	0.0787	±3	+10	0.68 to 1.00	0.0268 to 0.0394
1,680 micron (No. 12)	1.68	0.0661	±3	+10	0.62 to 0.90	0.0244 to 0.0354
1,410 micron (No. 14)	1.41	0.0555	±3	+10	0.56 to 0.80	0.0220 to 0.0315
1,190 micron (No. 16)	1.19	0.0469	±3	+10	0.50 to 0.70	0.0197 to 0.0276
1,000 micron (No. 18)	1.00	0.0394	±5	+15 *a*	0.43 to 0.62	0.0169 to 0.0244
840 micron (No. 20)	0.84	0.0331	±5	+15 *a*	0.38 to 0.55	0.0150 to 0.0217
710 micron (No. 25)	0.71	0.0280	±5	+15 *a*	0.33 to 0.48	0.0130 to 0.0189
590 micron (No. 30)	0.59	0.0232	±5	+15 *a*	0.29 to 0.42	0.0114 to 0.0165
500 micron (No. 35)	0.50	0.0197	±5	+15 *a*	0.26 to 0.37	0.0102 to 0.0146
420 micron (No. 40)	0.42	0.0165	±5	+25 *a*	0.23 to 0.33	0.0091 to 0.0130
350 micron (No. 45)	0.35	0.0138	±5	+25 *a*	0.20 to 0.29	0.0079 to 0.0114
297 micron (No. 50)	0.297	0.0117	±5	+25 *a*	0.170 to 0.253	0.0067 to 0.0100
250 micron (No. 60)	0.250	0.0098	±5	+25 *a*	0.149 to 0.220	0.0059 to 0.0087
210 micron (No. 70)	0.210	0.0083	±5	+25 *a*	0.130 to 0.187	0.0051 to 0.0074
177 micron (No. 80)	0.177	0.0070	±6	+40 *a*	0.114 to 0.154	0.0045 to 0.0061
149 micron (No. 100)	0.149	0.0059	±6	+40 *a*	0.096 to 0.125	0.0038 to 0.0049
125 micron (No. 120)	0.125	0.0049	±6	+40 *a*	0.079 to 0.103	0.0031 to 0.0041
105 micron (No. 140)	0.105	0.0041	±6	+40 *a*	0.063 to 0.087	0.0025 to 0.0034
88 micron (No. 170)	0.088	0.0035	±6	+40 *a*	0.054 to 0.073	0.0021 to 0.0029
74 micron (No. 200)	0.074	0.0029	±7	+60 *a*	0.045 to 0.061	0.0018 to 0.0024
62 micron (No. 230)	0.062	0.0024	±7	+90 *a*	0.039 to 0.052	0.0015 to 0.0020
53 micron (No. 270)	0.053	0.0021	±7	+90 *a*	0.035 to 0.046	0.0014 to 0.0018
44 micron (No. 325)	0.044	0.0017	±7	+90 *a*	0.031 to 0.040	0.0012 to 0.0016
37 micron (No. 400)	0.037	0.0015	±7	+90 *a*	0.023 to 0.035	0.0009 to 0.0014

** The five sieves marked in the first column with a double asterisk (**) may be used instead of the 4-in., 2-in., 1-in., 1/2-in., and 1/4-in. sieves when it is desired to have a series of sieves nesting with the Fine Series and continuing that series with the $\sqrt[4]{2}$: 1 ratio. All of the other sieves listed above are in a $\sqrt[4]{2}$: 1 ratio with the Fine Series within the limit of the specified permissible variations. Care should be taken in designating the five sieves marked with the double asterisk; they should not be designated as 4-in., 2-in., 1-in., 1/2-in., and 1/4-in., but as 4.24-in., 2.12-in., 1.06-in., 0.530-in., and 0.265-in. (or by the manufacturer's nominal values, for example, for the last three 1.050-in., 0.525-in., and 0.263-in.).

a For sieves from 1,000-micron (No. 18) to the 37-micron (No. 400) size inclusive, not more than 5 per cent. of the openings shall exceed the nominal opening by more than one-half of the permissible variation in maximum opening.

Table 28. Testing-sieve series

Nominal aperture	Tyler					A.S.T.M. standard					British standard				
	Mesh $\sqrt{2}$ series	Aperture		Mesh $\sqrt[4]{2}$ series	Wire diameter, in.	Mesh	Aperture		Wire diameter, in.	Tolerance ± % [a]	Mesh	Aperture		Wire diameter, in.	Tolerance ± % [a]
In.		In.	Mm.				In.	Mm.				In.	Mm.		
3	.....	2.97	.....	.....	0.207	.....	3.00	76.2	0.19 to 0.32	2	.....	.....	.....	.....	.....
2	.....	2.10	.....	.....	0.192	.....	2.00	50.8	0.16 to 0.245	2	.....	.....	.....	.....	.....
1 1/2	.....	1.48	.....	.....	0.162	.....	1.50	38.1	0.145 to 0.210	2	.....	.....	.....	.....	.....
1	.....	1.050	26.67	.....	0.148	.....	1.00	25.4	0.135 to 0.177	3	.....	.....	.....	.....	.....
7/8	.....	0.883	22.43	.....	0.135	.....	0.875	22.2	0.127 to 0.166	3	.....	.....	.....	.....	.....
3/4	.....	0.742	18.85	.....	0.135	.....	0.750	19.1	0.122 to 0.154	3	.....	.....	.....	.....	.....
5/8	.....	0.624	15.85	.....	0.120	.....	0.625	15.9	0.108 to 0.135	3	.....	.....	.....	.....	.....
1/2	.....	0.525	13.33	.....	0.105	.....	0.500	12.7	0.094 to 0.122	3	.....	.....	.....	.....	.....
7/16	.....	0.441	11.20	.....	0.105	.....	0.438	11.1	0.088 to 0.112	3	.....	.....	.....	.....	.....
3/8	.....	0.371	9.423	.....	0.092	.....	0.375	9.52	0.083 to 0.102	3	.....	.....	.....	.....	.....
5/16	.....	0.312	7.925	2 1/2	0.088	.....	0.312	7.93	0.073 to 0.093	3	.....	.....	.....	.....	.....
1/4	3	0.263	6.680	3	0.070	3	0.250	6.35	0.063 to 0.083	3	.....	.....	.....	.....	.....
Micron															
5,660	.....	0.221	5.613	3 1/2	0.065	3 1/2	0.223	5.66	0.050 to 0.075	3	.....	.....	.....	.....	.....
4,760	4	0.185	4.699	4	0.065	4	0.187	4.76	0.045 to 0.066	3	.....	.....	.....	.....	.....
4,000	.....	0.156	3.962	5	0.044	5	0.157	4.00	0.039 to 0.058	3	.....	.....	.....	.....	.....
3,360	6	0.131	3.327	6	0.036	6	0.132	3.36	0.034 to 0.052	3	5	0.132	3.34	0.068	3
2,830	.....	0.110	2.794	7	0.0378	7	0.111	2.83	0.031 to 0.047	3	6	0.1107	2.81	0.056	3
2,380	8	0.093	2.362	8	0.032	8	0.0937	2.38	0.0291 to 0.0433	3	7	0.0949	2.41	0.048	3
2,000	.....	0.078	1.981	9	0.033	10	0.0787	2.00	0.0268 to 0.0394	3	8	0.0810	2.05	0.044	3
1,680	10	0.065	1.651	10	0.035	12	0.0661	1.68	0.0244 to 0.0354	3	10	0.0660	1.67	0.034	3
1,410	.....	0.055	1.397	12	0.028	14	0.0555	1.41	0.0220 to 0.0315	3	12	0.0553	1.40	0.028	3
1,190	14	0.046	1.168	14	0.025	16	0.0469	1.19	0.0197 to 0.0276	3	14	0.0474	1.20	0.024	3
1,000	.....	0.039	0.991	16	0.0235	18	0.0394	1.00	0.0169 to 0.0244	5	16	0.0395	1.00	0.023	3
840	20	0.0328	0.833	20	0.0172	20	0.0331	0.84	0.015 to 0.0217	5	18	0.0336	0.85	0.022	5
710	.....	0.0276	0.701	24	0.0141	25	0.0280	0.71	0.013 to 0.0189	5	22	0.0275	0.70	0.018	5
590	28	0.0232	0.589	28	0.0125	30	0.0232	0.59	0.0114 to 0.0165	5	25	0.0236	0.60	0.0164	5
500	.....	0.0195	0.495	32	0.0118	35	0.0197	0.50	0.0102 to 0.0146	5	30	0.0197	0.50	0.0136	5
420	35	0.0164	0.417	35	0.0122	40	0.0165	0.42	0.0091 to 0.013	5	36	0.0166	0.42	0.0112	5
350	.....	0.0138	0.351	42	0.0100	45	0.0138	0.35	0.0079 to 0.0114	5	44	0.0139	0.35	0.0088	5
297	48	0.0116	0.295	48	0.0092	50	0.0117	0.297	0.0067 to 0.0100	5	52	0.0116	0.30	0.0076	6
250	.....	0.0097	0.246	60	0.0070	60	0.0098	0.25	0.0059 to 0.0087	5	60	0.0099	0.252	0.0068	6
210	65	0.0082	0.208	65	0.0072	70	0.0083	0.21	0.0051 to 0.0074	5	72	0.0083	0.211	0.0056	6
177	.....	0.0069	0.175	80	0.0056	80	0.0070	0.177	0.0045 to 0.0061	6	85	0.007	0.177	0.0048	6
149	100	0.0058	0.147	100	0.0042	100	0.0059	0.149	0.0038 to 0.0049	6	100	0.006	0.152	0.004	6
125	.....	0.0049	0.124	115	0.0038	120	0.0049	0.125	0.0031 to 0.0041	6	120	0.0049	0.125	0.0034	6
105	150	0.0041	0.104	150	0.0026	140	0.0041	0.105	0.0025 to 0.0034	6	150	0.0041	0.105	0.0026	8
88	.....	0.0035	0.088	170	0.0024	170	0.0035	0.088	0.0021 to 0.0029	6	170	0.0035	0.088	0.0024	8
74	200	0.0029	0.074	200	0.0021	200	0.0029	0.074	0.0018 to 0.0024	7	200	0.0030	0.076	0.002	8
62	.....	0.0024	0.063	250	0.0016	230	0.0024	0.062	0.0015 to 0.0020	7	240	0.0026	0.065	0.0016	8
53	270	0.0021	0.053	270	0.0016	270	0.0021	0.053	0.0014 to 0.0018	7	300	0.0022	0.053	.....	8
44	.....	0.0017	0.044	325	0.0014	325	0.0017	0.044	0.0012 to 0.0016	7	.....	.....	.....	.....	.....
37	400	0.0015	0.037	400	0.001	400	0.0015	0.037	0.0009 to 0.0014	7	.....	.....	.....	.....	.....
	Base = 200-m. = 0.074 mm., $\sqrt{2}$.					Base = 18-m. = 1.00 mm., $\sqrt[4]{2}$.									

[a] Permissible variations in average openings.

secondary maximum near the fine end, whereas the weight of the undersize of the finest screen is usually greater than that of the last preceding grades. This behavior is apparently a natural characteristic of crushed homogeneous material. The location of the maximum point in the curve varies with the extent of the size reduction, the method of crushing, and perhaps other factors. If the rock is nonhomogeneous, the secondary maximum is usually more pronounced and its position distinctly related to the rock structure, whereas the location of the principal maximum differs from that of a homogeneous rock similarly treated. As the number of grades is decreased, the smoothness of the curves decreases and a small amount of experimental work makes it apparent that irregular intervals between successive grade sizes increases the irregularity of the results. While this is an *ex post facto* explanation, it is the principal physical justification for a testing-sieve scale with regular size intervals. Various testing-sieve scales have been proposed (*Ed. 1, 1183*) but today the use of the Tyler series is almost universal.

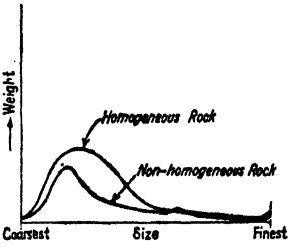

FIG. 97. Direct plots of sizing tests of homogeneous and nonhomogeneous rock powders.

Tyler series is a geometrical progression with the multiplier $\sqrt{2}$ (= 1.414); it starts from the standard 200-m. testing sieve (0.0029-in. = 0.074-mm. = 74-micron). This screen has long been established in testing-sieve practice and standardized by the U. S. Bureau of Standards. The 20-m. (0.833 mm.) and 100-m. (0.147-mm.) screens of this series have also been standardized by the Bureau. The screens have been adopted worldwide, hence published screen tests of results at one mill can be interpreted in terms of screens familiar to readers at other mills practically everywhere. The manufacturers also make sieves to the $\sqrt[4]{2}$ ratio, in order to give closer sizing, if desired. This series also starts at the standard 200-m., hence fills in the gaps between the screens in the regular series.

U. S. series (A.S.T.M. STANDARD) also uses the $\sqrt{2}$ ratio but is based on a 1-mm. (= 1,000-μ) opening. Owing to the range of permissible wire diameters established in 1938 this series can now be used interchangeably with the Tyler Standard Sieve series.

British Engineering Standards Association series (B.S. SERIES) (*32 CEMR 357*) adopted in 1932 supersedes the old I.M.M. series. The openings in the B.S. screens follow closely those in the Tyler series; the slight differences stem from the specification of British Standard wire diameters.

Table 28 gives the mesh and apertures of the Tyler, U. S., and B.S. testing sieves.

Screens for coal testing. Holbrook and Fraser (*Bul 234, USBM*) call attention to the fact that the standard testing-sieve scales are not useful for ordinary coal testing for several reasons, *viz.*: (1) They include such fine screens that woven-wire screen surface must be used, whereas most commercial coal preparation is done on round-hole screens to which testing sieves must correspond. (2) The series are based on the metric system, whereas coal is sold in sizes commonly rated in common (English) units. (3) The majority of screens in the proposed scales are below 1-mm., whereas the interest in coal investigations is usually in coarser sizes. (4) The usual testing sieves have 8-in. frames; coal testing, involving as it does much coarser material, requires larger samples than ore testing and consequently larger sieves.

Table 29. Thickness of plates for round-hole screens

Screening area, sq. in.	Diameter of opening, in.	Thickness of plate, in.	
		Minimum	Maximum
Under 100....	All sizes	0.049	0.066
100 and over	1/16 and 1/8	0.049	0.066
	1/4 to 2 1/2, incl.	0.060	0.100
	3 and 3 1/2	0.075	0.130
	4 and 5	0.105	0.160
	6 and 8	0.120	0.175

Specifications for round-hole plate screens were adopted by the A.S.A. in 1939 (*ASTM E 11–39*), as follows:

Plates used in manufacture of round-hole screens shall be made of brass, bronze, steel or other rigid metal. Thickness of plate shall be governed by size of opening as well as screening area of screens and shall conform to the requirements prescribed in Table 29.

Frames for laboratory screens shall be at least 8-in. in diameter. Frames for standard 8-in. laboratory screens shall conform to the requirements specified in Section 3 for woven-wire cloth sieves. Frames for large screens may be made of either hardwood or metal and may be square, rectangular, or circular as specified. For screens having circular openings 1-in. in diameter or larger, frames larger than 8-in. in diameter are recommended.

(*a*) Spacings of openings shall conform to the following requirements:

Nominal diameter of opening, in.	Nominal width of metal between adjacent openings, in.	Nominal diameter of opening, in.	Nominal width of metal between adjacent openings, in.	Nominal diameter of opening, in.	Nominal width of metal between adjacent openings, in.
1/16	3/64	7/8	1/4	3	3/4
1/8	3/32	1	3/8	3 1/2	3/4
1/4	1/8	1 1/4	3/8	4	3/4
3/8	3/16	1 1/2	1/2	5	1
1/2	3/16	2	5/8	6	1
5/8	3/16	2 1/2	3/4	8	1
3/4	1/4				

(*b*) The openings shall be so arranged that their centers lie at the vertices of triangles which are approx. equilateral within the limits given by the permissible variations in width of metal and diameter of opening.

Permissible variations for openings and spacings:

(*a*) For screens having openings 1/4-in. or less in diameter, the actual diameter of any opening shall not vary from the nominal diameter by more than plus or minus 5%.

(*b*) For screens having openings over 1/4-in, in diameter, the actual diameter of any opening shall not vary from the nominal diameter by more than plus or minus 3%.

(*c*) The width of metal between adjacent openings in the screen plate shall not vary from the nominal value by more than plus or minus 20%.

Screens for pulverized coal may be the usual square-mesh wire-cloth sieves.

Methods of screen analysis. Rough analyses, suitable for all ordinary work, are made by placing a weighed dry sample of the material to be tested on the top or coarse screen of a nest (scale ratio, $\sqrt{2}$: 1), shaking the nest until most of the undersize has passed the coarse screens (1 or 2 min.), then removing the screens one at a time, beginning at the top, shaking each separately over a pan until the amount passing through in a minute is less than 1% of that remaining on the screen. Undersize is added to the top screen of the remaining nest. On coarse screens (0.75-in. or larger apertures) pieces near the screen size may justifiably be tested and put through, if possible, by hand. Oversizes and final undersize should be weighed and kept separate until all have been weighed and the weight checked against the original weight. Weighings should be accurate to within 1 to 2% and the total weight of the grades should check the original weight of the sample within 2%. Screens should be shaken in such a way that the material is caused to travel slowly in a thin sheet over the whole surface of the sieve and at the same time the sieve should be jarred in a way that will cause the cloth to vibrate in a direction perpendicular to its plane. In specifying a standard method for sieve testing of cement, the U. S. Bureau of Standards states that the sieve "shall be held in one hand in a slightly inclined position ···, at the same time gently striking the side about 150 times per min. against the palm of the other hand on the up stroke. The sieve shall be turned every 25 strokes about one-sixth of a revolution in the same direction." The reason for the final specification appears in some work by Griesenauer (*70 EN 1296*) showing a variation of 1.4% in the mean of tests across warp and shoot wires. Machine shaking may, of course, be substituted for hand shaking. When the fine material is caked, it may be broken up by rubbing on the sieve with a bristle brush or a rubber cork. Cut-metal washers are sometimes placed on the finer sieves during shaking, but this practice wears and distorts the fine cloth and, with soft material, produces an improperly large amount in the finest size.

When coarse material is tested the sample must be large because of the impossibility of cutting down accurately (Art. 1). On the other hand, except for the most accurate work, a carefully riffled sample of <0.12-in. material weighing 250 to 300 gm. is large enough. Hence considerable time can be saved by sifting the large sample roughly on the 3.33-mm. screen, cutting down the undersize to 250 to 300 gm., and screening this on the finer screens while the oversize is rescreened beginning with the coarsest screen. The undersize from the 3.33-mm. screen on the rescreening may usually be considered oversize on the next finer screen and so treated in calculating the redistribution.

Wet preliminary splitting is employed for reasonably precise routine mill and laboratory samples. The method comprises a preliminary wash of the sample, including subjection of the washings to the 200-m. screen; drying the oversize; screening oversize on a nest of screens down to and including 200-m. in a mechanical test-sieve shaker, and adding the dry undersize of the 200-m. screen to the undersize from wet screening. **Sample weights** should be about 1,000 gm. for material from 4-m. to 10-m. limiting; 500 gm. for 14-m. to 28-m. maximum; 200 gm. for 35-m. and finer. **Screening time** is determined by the finest screen in the nest and by the type of sieve shaker; 15 min. for 200-m. screens, 10 min. for 100-m. is normally sufficient; friable ores should be shaken shorter times, say 10 and 7 min. respectively. Losses of 0.5 to 1.0% may be expected; these are usually distributed to the

various sizes according to their weight, but observation indicates that maximum loss is in the finer sizes and the basis of adjustment should be changed accordingly.

Weighing of sample fractions may be simplified greatly by adopting some such routine as the following.

(*a*) Starting with the coarsest screen, remove oversize from screen by inverting the latter over a pan. (If this operation is performed over glazed paper of a color that contrasts with the particles, spill losses will be reduced.) Dislodge material lightly caught in screen meshes by pressure of a finger for coarse screens, by means of a stiff brush applied to the underside of finer screens, and add the dislodged material to the oversize. Brush the dust from the screen onto the next finer screen, using a camel's-hair brush. Place the screen, in inverted position, at a convenient point on the work bench.

(*b*) Transfer the material from the pan to a scoop, such as Fig. 98, and thence to a suitable sample pan, using the camel's-hair brush to control the rate of flow of the material and thus prevent spill. Place the pans in order in a position adjacent the scales.

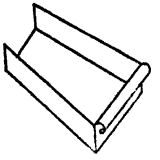

FIG. 98. Transfer scoop.

(*c*) After all of the grades have been transferred from screens to pans, weigh on pulp scales of suitable capacity, starting with the coarsest grade. Transfer from sample pan to scale pan should be made via the scoop, as above described, dusting carefully with the camel's-hair brush after each transfer. After each weighing return sample to its own sample pan, retaining the sample until all weighing is completed and a check can be obtained with the original sample weight.

(*d*) Check the record of screen sizes against the inverted stack of screens. Samples may now be discarded, provided no further use of them is contemplated.

Wet samples should not be dried before screen testing until the slime has been removed by passing it through the finest screen of the series to be used, if maximum accuracy in estimation of fines is desired. WET SCREENING is best done by jigging light loads on the fine screen at the surface of water in an enameled pail, and washing the material on the screen with a fine jet until substantially all of the slime has passed. Oversize is then dried and rescreened on a nest including the fine screen, and the undersize of the fine screen on dry sifting is added to the dried undersize of the wet screening. This procedure is quicker and more accurate than preliminary drying and dry sifting, on account of the difficulty in breaking up slime cake formed in drying. Sampling wet pulp for the screen sample is, however, a difficult matter, and this consideration may justify drying, riffling, and subsequent wetting to break slime cake.

Standard sizing test (*ASA M6–1932*, revised) prescribes as follows:

Sieves shall be 8-in. diameter, with well-fitting pan and cover, all free from crevices wherein particles can lodge. Sieve-scale ratio must not exceed $\sqrt{2}$: 1. It is recommended that sieving be carried to 37-μ.

Preparation of sample. Dry thoroughly at 110° C., mix well, and divide by riffing to an amount within 10% of the standard charge (see below). Adjustment of an exact weight may be made by adding to or subtracting from this split, but it is preferable to take the entire split.

Table 30. Standard sample weights for screen analyses

Limiting particle size, mm.	Standard charge, gm.
16.00 to 11.32	40,000
11.32 to 8.00	12,500
8.00 to 5.66	5,000
5.66 to 4.00	2,000
4.00 to 2.00	1,000
2.00 to 1.00	500
1.00 to 0.50	250
0.50 to 0.25	100
0.25 to 0.00	50

Size of sample. See Table 30. DOUBLE-SIZE CHARGES may be screened by making two sizing tests and combining like products.

Wet splits. Sieve wet through the finest sieve, preferably using distilled water, either by decanting through the sieve or by direct wet sieving, until all of the slime is removed. Dry undersize and oversize at 110° C., cool, and weigh. Add any loss in weight to the fine undersize.

Standard hand-sieving manipulation. Work over a smooth paper to indicate spills. Hold the sieve, with pan and cover in place, slightly inclined in one hand, and, with a stroke of 6 to 8 in., strike gently against the other hand 150 times per min., turning the sieve one-sixth revolution after each 25 strokes, thus completing a revolution in 1 min. This operation is called a 1-min. period. If the 37-μ sieve is used, a 6-in. frame is recommended; at 200 s.p.m. turning one-eighth revolution after each 25 strokes, agitation is equivalent to that prescribed for the 8-in. sieve.

End point is reached when less than 0.05% of the weight of the original charge passes through the sieve in a 1-min. period.

Oversize from wet split, after drying and weighing, is sieved dry on the finest sieve until the undersize for a 1-min. period is less than 0.1% of the original weight of the charge. Brush both sides of the sieve to remove dust and loosely held particles in the meshes. Return the oversize to the sieve, and continue sieving until the undersize for a 1-min. period is less than 0.05%. Repeat the brushing, and sift for another 1-min. period. If undersize is again less than 0.05%, return it to the oversize; if it is more than 0.05%, continue sieving until a 1-min. period gives less than 0.05%. All undersize of the finest sieve is weighed and added to the undersize from the wet split.

Collection of oversize. [Pour onto glazed paper or into a pan.] Clean the sieve by tapping sides, brushing, and by rubbing with a flat rubber [all over glazed paper]. Add material obtained by cleaning to the oversize, which is weighed. Loss is added to the undersize of the particular sieving in which it

occurred. Total loss for the entire sieving operation should not exceed 1% of the weight of the original sample. [Bracketed material added by *Ed.*]

Optional Methods

Separating sub-sieve sizes. No method or apparatus is recommended as standard. Whether sedimentation or elutriation is employed, the operation must be carried on at a definite temperature (20° C. is suggested); the sample must be thoroughly dispersed; distilled water is preferable.

Table 31. Tentative settling-rate size equivalents

Size range, μ	Arithmetical average size, μ	Falling velocity, mm. per sec. for		Time from start during which this product is collected after 1-meter fall, min.
		Coarse	Fine	
74~52 *a*	63.0	3.6	1.8	0 to 9
52~37 *b*	44.5	1.8	1.0	9 to 17
37~26	31.5	1.0	0.5	17 to 33
26~18.5	22.2	0.5	0.22	33 to 76
18.5~13	15.8	0.22	0.13	76 to 128
13~9.2	11.1	0.13	0.08	128 to 210
9.2~6.5	7.9	0.08	0.05	210 to 330
6.5~4.6	5.6	0.05	0.03	330 to 560

a Equivalent to 200~270-m.

b Equivalent to 270~400-m. The particles for each settling interval may be measured by means of the microscope, from which the average size may be calculated. No method for the microscopic measurement is recommended as a standard. Sub-sieve sizes, if not actually measured, are reported as products settled 1 meter for a definite time period.

Settling-rate size equivalents based on Richards' figures for quartz are given in Table 31. Equivalents based on Stokes' law are widely used.

Sieving the coarser sizes first, after the wet split has been made on the finest sieve, is optional. Carry to end points described under *Oversize from wet split.* Loss is included in the undersize of the finest sieve.

Material that disintegrates or alters when wetted is sieved dry. Proceed as described under *Oversize from wet split.* Each size must be lightly brushed on the sieve to free the particles from adhering dust before being considered completely sieved. Measurement of sub-sieve sizes may be made as described by Perrott and Kinney (*6 # 2 CerS 417*), embedding the material in Canada balsam containing 20% xylol, between two slides and making a microscopic count and measurement (see Art. 9).

Material that decrepitates below 110° C. must be wet sized, starting with an unknown charge weight if moisture determination is not feasible. In this case the total weight of the products must be considered the original charge weight, hence loss in sizing cannot be determined. End point must be determined by judgment of the amount passing through the sieve in 1 min,; this is not sufficiently accurate for a standard, hence wet sizing is not recommended except where dry sieving is impracticable.

Machine sieving for 1-min. intervals may be substituted for the 1-min. hand-sieving periods. Machine analyses may be made using a nest of sieves. The sample must first be wet split by hand on the finest sieve. Dried oversize is sieved for 30 min., with possible 20-min. and 10-min. successive subsequent periods. After the 30-min. period the sieves are cleaned and progress checked by hand sieving as follows: Starting with the coarsest oversize, weigh, then hand-sieve for a 1-min. period. If undersize is less than 0.05% of the original weight, sieving for this size is considered complete; if between 0.05 and 0.1%, sieving is completed by hand; if more than 0.1%, machine sieving is continued 20 min. After the 20-min. period, check by hand as before, and, if necessary, sieve further for 10 min. After the 10-min. period, finish all sizes by hand. Loss must be reported as "loss in weight," but should be included in the percentage of undersize from the finest sieve.

Comment. Apart from the excessive time required for this procedure the principal faults are (*a*) the large sample weights recommended, and (*b*) sifting the dry material on progressively coarser screens. Duplicate screen tests of 10-kg. shovel samples of <16-mm. material check well within the limits of the differences in sifting by two different operators, and the same is true of samples of <0.12-in. material weighing between 250 and 300 gm. Placing coarse oversize on fine screens is equivalent to the use of metal washers, which is universally and rightly condemned. It is questionable whether any of the ends served by sieve analysis justify this elaborate procedure. It is useful, however, as a standard of comparison for the often less than adequate procedures in commercial use.

Standard sizing tests for powdered coal (*ASTM D 197–30*), anthracite (*ASTM D 310–34*), and for bituminous coal (*ASTM D 311–30*) have also been approved by the A.S.T.M. In addition to the screening method to be followed, these standards specify the manner of collecting a gross sample and the procedure to be followed in the preparation of the laboratory sample.

Shape screening is important in testing concrete aggregates, owing to the fact that aggregate packs more compactly the more closely it approaches equiaxial shape, and that the corresponding saving in cement may amount to as much as 5 to 10%. Shape screening is performed by screening first on square (or round) holes, and rescreening oversizes successively on rectangular slotted screens. Sheppard (*RI 3432*) rescreened the oversizes of square-mesh woven-wire sieves on rectangular slotted screens, so selected that the widths of the openings were one-half and one-third of the side of the square opening, and the length was greater than the diagonal of the square opening. Table 32 shows the results of a shape-screening test on limestone. If width is less than twice the thickness, particles are rated CUBICAL; if width is >2 <3 times thickness, rating is INTERMEDIATE;

Table 32. Shape distribution, length : thickness, and width : thickness ratios of limestone crushed in a Blake-type crusher

Size, in.	Number of Ton-Cap or Ty-Rod screen	Width of opening, in.	% retained, CUBES	% retained, INTERMEDIATE	% passing, SLABS	Average width + thickness *a*	Average length + thickness *a*
12~8.5	.....	6.0	.....	.....	.....	.....	.....
	.....	4.0	.....	83.0	.....	1.91	2.55
	.....	4.0	.....	.....	17.0	2.85	3.42
8.5~6	.....	4.25	62.0	.....	.....	1.39	1.80
	.....	2.75	.....	38.0	.....	2.18	3.02
	.....	2.75	.....	.....	.....	.....	.....
6~4.25	.....	3.0	79.5	.....	.....	1.31	1.85
	.....	2.0	.....	19.7	.....	2.35	2.98
	.....	2.0	.....	.....	0.8	3.13	3.84
4.25~3	.....	2.0	80.3	.....	.....	1.44	2.11
	.....	1.50	.....	15.8	.....	2.53	3.48
	.....	1.50	.....	.....	3.9	3.93	4.35
3~2.12	.....	1.50	70.8	.....	.....	1.44	2.47
	9,515	1.00	.....	23.7	.....	2.53	3.80
	9,515	1.00	.....	.....	5.5	3.93	5.40
2.12~1.50	9,515	1.00	61.3	.....	.....	1.51	2.73
	9,312	0.75	.....	31.9	.....	2.37	3.89
	9,312	0.75	.....	.....	6.8	3.88	5.74
1.50~1.05	9,312	0.75	56.6	.....	.....	1.42	2.51
	9,538	0.50	.....	32.0	.....	2.47	4.03
	9,538	0.50	.....	.....	11.4	4.00	5.64
1.05~0.742	9,538	0.50	56.5	.....	.....	1.53	2.86
	9,566	0.328	.....	31.0	.....	2.49	4.10
	9,566	0.328	.....	.....	12.5	4.63	6.31

a Determined by direct measurement.

if width is more than three times thickness, rating is SLABBY. Table 33 gives the weighted average ratios of particle length and width to thickness.

Correction of screens has been attempted by several workers. Sizing tests of commercial products are necessarily empirical and in order to obtain reproducible results all conditions must be standardized. Despite standardization, however, it is frequently impossible to obtain comparable results under apparently identical conditions. The primary cause of disparity is that retention from a given material on two nominally equivalent screens may differ by as much as 20%, and on two certified equivalent screens by as much as 5%. This is due to (*a*) the wide tolerances permitted in the A.S.T.M. standard specifications (see Table 27), and (*b*) the method used in certifying conformity.

Table 33. Weighted average ratios of particle length and width to thickness of product from Table 32

Size, in.	Weighted average ratio of width to thickness *a*	Weighted average ratio of length to thickness *a*
12~8.5	2.07	2.69
8.5~6	1.69	2.27
6~4.25	1.46	2.01
4.25~3	1.61	2.35
3~2.12	1.84	2.95
2.12~1.50	1.91	3.25
1.50~1.05	2.05	3.36
1.05~0.742	2.23	3.69

a Weighted according to weights shown in Table 32.

Weber and Moran (*10 IECA 180*) showed that screens with the same average opening but with different standard deviations gave different retentions. They noted that sieves with relatively large dispersion of size of opening always behaved as if the average opening was somewhat larger than that calculated from microscopic measurements of opening. The difference between the average opening of a sieve with high dispersion and that of a sieve having equal retention but small dispersion increases as the standard deviation of the former increases above 6%. This effect of the relatively larger proportion of oversized openings in a sieve with large dispersion increases as the shaking time increases, since more opportunity is provided slightly oversized particles to pass these oversized openings. Weber and Moran proposed an empirical equation for the correction of screen aperture, *i.e.*,

$$X_t = X\left[1 + 0.002t\left(\frac{d-6}{0.06}\right)^{1/2}\right] \qquad (38)$$

is the effective opening for a shaking time of t min., $\bar{X}$ is the arithmetic mean of the microscopically measured openings, t is time in minutes, $d\left(=\frac{100\sigma}{\bar{X}}\right)$ is the per cent. standard deviation (σ is the standard deviation) or the coefficient of dispersion (or variation).

Bond and Maxson (*134 A 301*) propose a method of correction based on the size-distribution curve normally associated with a crushed or ground homogeneous material. This curve, obtained by plotting the logarithm of the per cent. weight retained upon each screen in the Tyler standard series against the ordinal number of the screen (see Art. 24) is linear, if the first three or four ordinal numbers (beginning at the largest particle) are disregarded. To correct a set of screens, petroleum coke crushed to <6-m. is screen-analyzed. The correct per cent. weight retained on 200-m. is determined with a special standardized screen. Assuming that the coarse screens vary little if any from their designated size (experience supports this assumption) a straight line is drawn between the correct 200-m. point and the coarse screen. The plotted results of the screen analysis in general do not fall on the line so determined. A correction factor is calculated to make the resulting log per cent. weight fall on the distribution line. This correction factor is subsequently applied to all screen analyses performed with this set.

Hatch (*215 JFI 27*) also proposed a correction based on the size-distribution curve. His factor is applied to the designated aperture in such a fashion as to bring the actual distribution curve into congruence with the normal probability curve (see Art. 1). Since the Hatch method of correction does not depend upon the distribution curve of a standard material but upon the distribution curve of the material under test, it is applicable only to materials whose size-frequency distribution follows the normal law.

Protection of good screens is readily accomplished by use of two screens of the same mesh, placing the old one above the new one. The load is placed on the old screen, which passes all but difficult grains easily. Due to enlarged apertures difficult grains will pass the old screen more readily, and the old screen may also pass oversize. Difficult grains and oversize passing the old screen are caught on new screen and are there sized where openings are not deformed and the surface is not overloaded.

Mechanical testing-sieve shakers. It requires from 1 to 3 hr. to sift a 200-gm. sample containing 30 to 50 gm. of <200-m. material by manual shaking. Mechanical shaking reduces the time to from 30 to 45 min. and during the time the sieves are being shaken the operator is free for other laboratory duties.

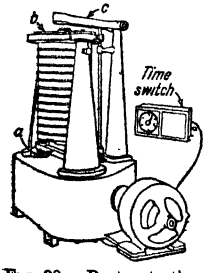

FIG. 99. Ro-tap testing-sieve shaker.

Ro-tap testing-sieve shaker (Fig. 99), for 8-in. testing sieves, consists of a movable cage with base a and top plate b between which a nest of 13 half-height sieves or 7 full-height with pan and cover can be mounted and subjected to a rotary sifting motion while at the same time the lever c strikes the top plate once per revolution and produces vibration of the screen cloth. A time switch on the motor is useful. Duplicate samples sifted for equal periods of time on the same or different machines check well within the limits of sampling error. If the total amount of dust in the sample is important, the sieves, after removal from the shaker, should be brushed around the inside of the rims with a soft brush and shaken individually for a short time as in hand sifting, as a small amount of dust collects around the edges of the coarser screens during the mechanical shaking and does not pass through. TY-LAB tester is a similar shaker, without tapper, for square screen frames.

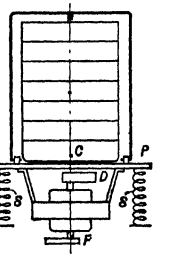

FIG. 100. Schematic diagram of the Cenco-Meinzer sieve shaker.

Cenco-Meinzer shaker (Fig. 100) comprises a platform P to which the sieve nest is clamped. This is supported by four helical springs S. A 1/6-hp motor is attached to the undersize of the platform. It carries off-balance weights D and F at the ends of its shaft. The motion is essentially horizontal gyratory, with a vertical component which depends upon the location of the center of mass, C, of the system.

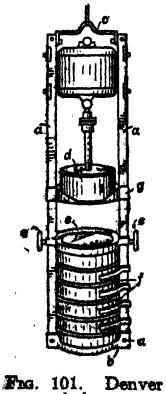

FIG. 101. Denver shaker.

Denver shaker (Fig. 101) is of unbalanced-pulley type. It consists of two square hardwood members a bolted at the bottom to a plate b recessed to seat standard 8-in. sieves, and at the top to a metal hanger c. A 1/6-hp. motor is bolted to the uprights near the top; its shaft carries an unbalanced pulley enclosed in the housing d. The sieve nest is placed between the base plate and a top plate e which is held firmly in position by tightening hand wheels e. Fingers f carried on one of the uprights prevent buckling of the nest. The assembly is suspended by a rope or rod from c. Rotation of the unbalanced pulley causes circular vibration of small amplitude in the clamp g. This is amplified by the resilience of members a, particularly at the bottom where the weight is least, and this motion is transmitted to the screen nest.

Home-made shakers can be devised by any one with a modicum of mechanical imagination.

A simple form (*RI 5538*) is made by fitting a handle to the pan of a sieve set, slotting the end of the handle to fit over an adjustable crank pin at the end of a shaft (about 500 r.p.m.) mounted horizontally at a height above a table top equal to the height of the center line of the pan handle above the pan bottom. Screen and cover are held to the pan by heavy rubber bands, and other bands anchor the screen assembly to a post in the table top. Nature of the motion depends upon the amplitude of the crank, the play in the crank slot, the location of the anchor pin with respect to the screen assembly, and the placing of the anchor bands. Time for screening in the 65- to 400-m. range is reported as 1 to 10 min.

Mechanical vibrator (Fig. 102) reported to screen more rapidly than the manufactured gyrating types (*RI 2933*) consists of a table *a* hinged at one end to foundation blocks *b* and held down at the other end against a bumping block *c* by a spring *d*. A sieve assembled with pan and cover *e* fits into a cleated space on the table as shown and is held down by a spring clamp *f*. Vibration is imparted to the table by means of a 4-tooth sprocket *g* carried under the center by a shaft supported by blocks *h* and driven by pulley *i* at about 300 r.p.m. Amplitude is controlled by a micrometer screw *j* set in the top of *c*.

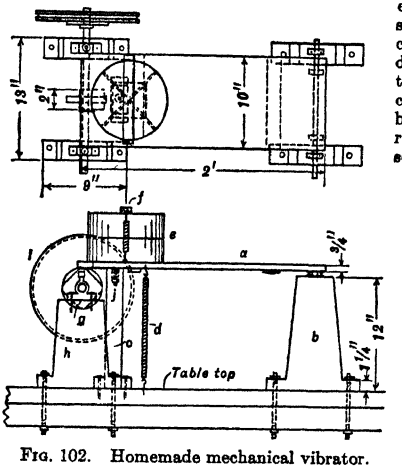

FIG. 102. Homemade mechanical vibrator.

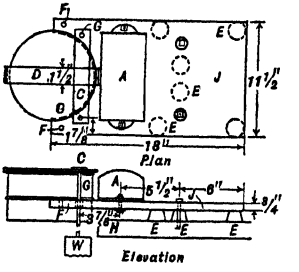

FIG. 103. Shaker with Syntron vibrator.

Magnetic vibrator *A* (Fig. 103) is used (*141 #9 J 58*) to vibrate a hardwood board *J* bolted against interposed rubber stoppers *E* to a firm base *H*. Board *J* is cut out as shown to receive the sieve nest. A frame comprising crossed straps *C* and *D*, welded together, and two 1/4-in. bolts *G* carrying counterweight cylinders *W* filled with lead shot press cover and sieves down on the pan, which is supported by its rim against board *J* and is held in place by 5/32-in. rubber tubing with 1/16-in. wall, threaded through holes *F*. Counterweights and frame weigh 10 lb. Bolts *G* are made long enough so that 10 high-wall sieves and a pan may be taken at once. A V-9 Syntron electric vibrator *A* with an electric controller was used.

13. ELUTRIATION WITH LIQUIDS

Elutriation is the process of grading sub-sieve sizes (usually <200-m.) into equal-settling grades in a fluid such as water or air. If the material is predominantly of one specific gravity, and the work is carefully done, the resulting grades can be made remarkably uniform by taking small settling intervals; but with widely different gravities or with marked grain-size differences, considerable size variation occurs, even with small intervals.

Decantation is the simplest method of elutriation.

Procedure. Take a tall beaker of 800- to 1,000-cc. capacity, place therein the sample to be sized, which should be of such weight that the concentration of solids does not exceed 5% by weight when the beaker is filled with water to a predetermined depth (say 10 to 20 cm.), stir thoroughly, and allow the beaker to stand for such a time that its duration in seconds divided by the depth of water in millimeters equals a predetermined settling rate corresponding to the largest particle desired in the grade. Required time may be read from Fig. 104 (see also Fig. 2, Sec. 8), or be determined by application of Stokes' equation (Sec. 8, Art. 1). Pour off supernatant liquid with

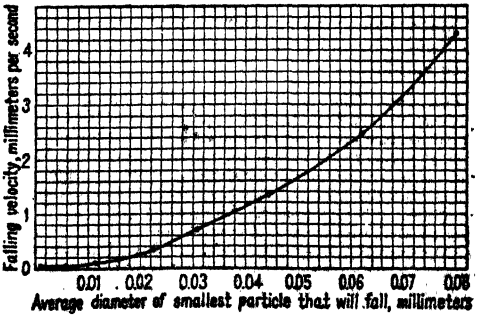

FIG. 104. Free-falling velocities of fine quartz (*after Richards*).

nonsettled solid in suspension, refill to the mark and again allow to settle for the same time. Repeat this until the appearance of the supernatant liquid indicates that all of the finest slime has been removed. Combine the decanted portions, take a sample, while wet, for microscopic determination of size (Art. 9), then dry at 110° C., cool, and weigh. Refill the beaker to the mark with fresh water, and repeat the above operations, allowing a shorter time for settling corresponding to the next coarser grade desired. Repeat as above until the desired number of grades is obtained. If there is obvious chemical action during the operation, using tap water, *e.g.*, formation of gelatinous precipitates, distilled water should be used. If this does not remedy the trouble, weak solutions of acid, alkali, or a salt may be used, but in such cases the presence of the added chemicals in the dried solid must be recognized. If microscopic sizing of the different grades is dispensed with, it must be recognized that there is considerable overlapping of sizes, due to the fact that not all of the solids start settling from the surface of the liquid in the beaker and that some particles that start settling from a point below the surface will reach bottom while coarser particles starting above them are still in suspension. Repetition, as directed, lessens this inaccuracy but does not eliminate it.

Still-water settling tube is an improvement on decantation. The apparatus (Fig. 105) consists of a glass tube of about 1.5-in. uniform inside diameter and 8 ft. long, converging in a 60° cone at the bottom to a stopcock with 1.5- to 2-mm. hole, and expanded at the top into a 60° funnel of about 200-cc. capacity. Calibrate the tube from stopcock to base of funnel sufficiently closely that the length at any part of the tube corresponding to a given volume withdrawn at the stopcock is known. From this calibration make a table of volumes for the required number of successive drafts such that the distance that the slowest settling particles are dropped, *i.e.*, that the surface originally at the base of the funnel drops, at each draft, is the same. Thus in Fig. 105, if the tube is calibrated for 10 draws, the successive volumes drawn should be such that the distances ab, $bc \cdots jk$, representing the successive drops of the surface originally at a, are equal. The charge, weighing from 20 to 50 gm., should be mixed with water to form a volume somewhat less than 200 cc. Place a closely fitting disk of metal or fine screen cloth at the base of the funnel with a handle extending above the rim. Charge the feed carefully and wash in the last part with a fine jet. Then, first observing and noting the time, remove the disk carefully to prevent the solid from plunging and allow settlement for a predetermined time, or for a time dependent upon the appearance or amount of material at the stopcock. The tube should be jarred slightly at intervals to prevent material from clinging to the sides. Draw off now the volume corresponding to the first equal drop in surface of settling column and set aside. Make successive draws at intervals determined by the requirements of the analysis, *e.g.*, at equal intervals, or at intervals determined by Fig. 104, or by Stokes' equation, to yield predetermined sizes, or at intervals which the settling behavior indicates will yield equal weights of solid. When the total volume of withdrawals is equal to the original volume of water in the settling column, there will remain a volume equal to that of the feed pulp and containing the finest slime. Remove this at one draw and class it as of slower settling rate than that of the slowest-settling particle in the preceding grade. Sizes of particles in the different grades may be determined by microscopic measurement or may be estimated from the known settling rates. Decant clear water from the different grades, dry at 110° C., cool, and weigh.

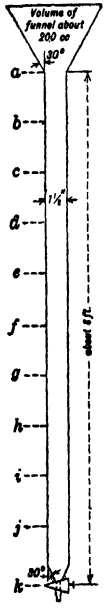

FIG. 105. Still-water settling tube.

If l is the total length of settling column, measured from neck of funnel to top of stopcock, N = the total number of draws, and n = the number of any given draw, then the average distance D_n that the particles taken in the nth draw have settled is given by the equation $D = l(2N - 2n + 1)/2N$. If t_n = the total time elapsed from the beginning of settlement until the end of the nth interval, the average settling velocity V_n of the solids collected during the nth interval is given by the equation $V_n = l(2N - 2n + 1)/2Nt_n$. If equal time intervals t are taken, this equation becomes $V_n = l(2N - 2n + 1)2Nt$. The slowest-settling particle in the last grade settles through the distance $D_{ss} = l - l/N$ in the time t_n. Its settling velocity is, therefore, $V_{ss} = l(N - 1)/Nt_n$ and the most rapidly settling particle in the final draft has a slower velocity.

Elutriation by rising water currents is performed by subjecting the material to be graded to rising currents of different velocities and collecting separately the material lifted by each current.

Procedure. The apparatus shown in Fig. 106 (*32 M&M 125*) is one of the simplest of these devices. As described, it was used merely to separate slime from a sample that was to be screen sized subsequently. The procedure was to set the dial cock f so that the current at the overflow level was sufficient to carry over all slime, then to close the rubber tube g with a pinchcock, charge the weighed sample into a and thereupon release the pinchcock. When overflow was clear, the material in e and that remaining in the tube were collected and sized. The same apparatus may, however, be used to separate a number of different grades. There are two alternative methods of procedure, *viz.*: (1) To set the current at the lower part of constriction c to just prevent slime from settling, feed the sample into a and collect the overflow in a pail or tub. Then raise the current slightly, feed back the settled material collected in e and again collect the overflow, repeating this procedure until the desired number of grades has been made. (2) Set the current originally so that the velocity at the lower part of section c will permit only the coarsest material to settle. Collect overflow and settled product. Separate the slime from the sand in the overflow by decantation. Slack off the current slightly, feed back the sandy portion of the first overflow and again collect the settled material. Repeat with gradually slower

currents until as many grades as desired have been made. Final products will consist of the various settlings and the decanted portion of the first overflow. This apparatus is adapted for relatively coarse grading only.

Schoene apparatus (Fig. 107) is distinguished by the fact that overflow is made through a piezometer, which permits ready setting of current velocities, once the piezometer is calibrated to the tube with which it is to be used. In the figure, *a* and *b* are sorting tubes of smaller and greater diameter respectively for coarse and fine sizing. The procedure consists in first determining the average cross-section of the cylindrical portions of the tubes by weighing the water drawn through the stopcocks corresponding to the measured length between two marks delimiting the cylindrical section. Knowing the average cross-section from the determination, average rising-current velocities can be determined by weighing overflows collected for known times. This is done and at the same time the corresponding

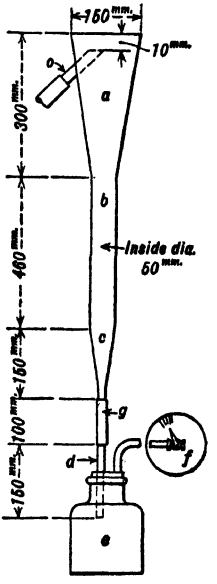

FIG. 106. Rising-current sizing tube.

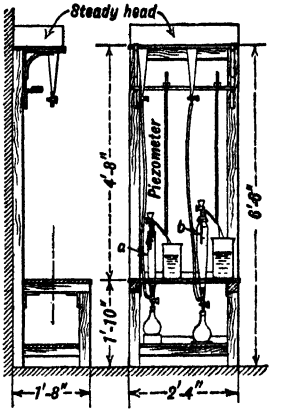

FIG. 107. Schoene elutriation apparatus (modified).

piezometer readings are taken and a curve showing average rising velocities in terms of piezometer readings plotted. To make a sizing analysis, fill the feed-water tank and maintain sufficient inlet so that the tank will overflow throughout the test. Close the stopcock at the lower end of the sorting tube and admit sufficient water from the tank so that the level in the sorting tube stands a couple of inches above the stopcock. Make up the weighed feed sample into a dilute pulp sufficiently small in volume to less than fill the tube and introduce this through the funnel. Close the funnel stopcock. Open the water cock slowly until the piezometer reading indicates the desired minimum current and continue this current until the discharge carries substantially no solids. Set aside the overflow, then increase the current and collect another grade and continue until all but the coarsest material is overflowed. Collect this last through the stopcock at the bottom of the sorting tube. Determine the size of material in different grades by microscopic methods or estimate from Fig. 104 or from Stokes' equation. Stadler (*22 IMM 686*) points out that, if the specific gravity of the material being sized is known, solid weights may be determined by weighing the material in a specific-gravity flask, or its equivalent, thereby saving much time in drying.

According to Schoene a calibration curve is unnecessary and the velocity V corresponding to any piezometer reading h may be obtained from the equation $V = V_1 \frac{h - c}{h_1 - c}$ when V_1 and h_1 are corresponding values from one observation and c is a factor, determined once for all, from the relation $c = (Q^2 h_1 - Q_1^2 h)/(Q^2 - Q_1^2)$ in which Q and Q_1 are quantities in cc. per sec. corresponding to piezometer readings h and h_1 respectively in cm.

Multi-tube elutriation. If a series of Schoene tubes of the type shown in Fig. 107, of different diameters, is set up without piezometers so that the overflow tube of the smallest enters the apex of the next larger, and so on, a charge of solid can be placed in the first and a current started of sufficient velocity to lift all but the coarsest material out of the first tube, and if the last tube is of sufficient diameter to overflow only the finest slime, there will be collected in the successive tubes successively finer grades, and the entire separation can be done at one operation. This is the best type of apparatus for routine tests, but it lacks flexibility. A homemade form is shown in Fig. 108 (*115 Ao 357*). PROCEDURE for 200-gm. charges comprised 24-hr. runs in which the charge was first rolled in a bottle for

several hours in a dispersing solution, wet-screened on a 200-m. sieve, the <200-m. material thickened by sedimentation, and then charged to the elutriator while the latter was full of water (clean, from a

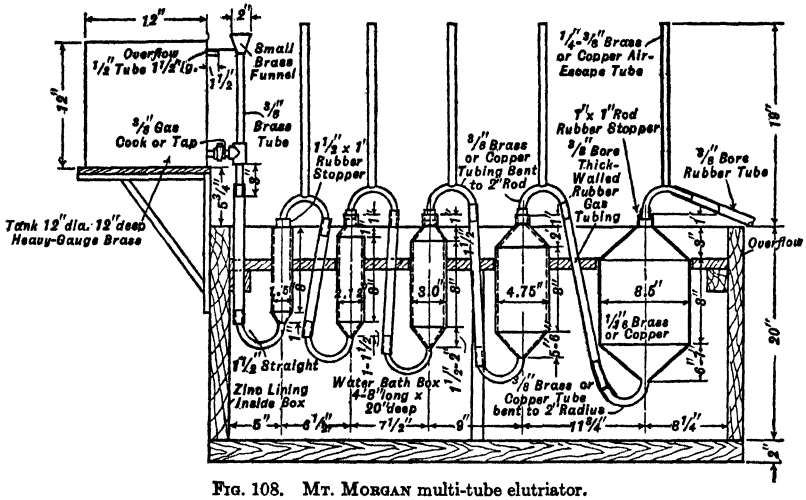

FIG. 108. MT. MORGAN multi-tube elutriator.

constant-head tank) and flowing at a low rate such that the charge volume plus the fresh water did not exceed the maximum flow calculated. Charging was done in three substantially equal fractions with 10-min. intervals between. When all charge was in, the rate was brought up to the calculated rate by two or three steps at 15-min. intervals. Overflow was collected in white-enameled pails. Tests were run for 24 hr. with occasional checks of flow rate. To discharge, current was shut off, about half an hour allowed for settlement of material in tubes, and this was then drawn off into enameled pails, the tubes were washed out, and the samples decanted and dried.

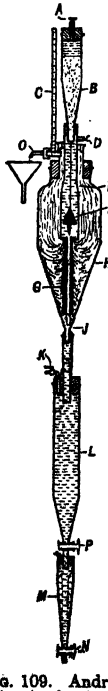

FIG. 109. Andrews kinetic elutriator.

Andrews kinetic elutriator, Fig. 109 (*40 MM 301*), comprises essentially free-settling elutriating chamber *H*, with valved overflow *O* carrying an indicating piezometer *C*, a feed tube *E* surmounted by a feed chamber *B*, a disintegrating ejector *G–F*, a hindered-settling column *L* for sand classification and a sand-collecting chamber *M*. In operation the sample is mixed thoroughly with the elutriating liquid, *e.g.*, water, in chamber *B* which, with air vent *A* closed, will hold the carrying liquid with the bottom open. *B* is then placed in position as shown and elutriating fluid (the same as used to charge *B*) is run in through *N* until overflow occurs at *O*. By opening *D* the level of introduced liquid rises until it merges into the liquid body in *B*, when solid settles in the stationary column in *E* (*D* being again closed) until, at the bottom of *E*, it meets a rising current through *G* and is flowed against the underside of *F*. This is supposed to effect disintegration of floccules by mechanical impact, and to impart to granular particles rebounding from *F* a downward velocity in excess of that due to gravity alone. Granular particles thereupon settle into *L* while finer particles rise through *H* and overflow at *O*.

Shiretts and Evans (*88 Ao 423*) report superior sizing with injector apparatus *G–F* in place. They also recommend certain changes in apparatus and operation, *viz.*: (1) A constant-head tank placed about 7 ft. above *N* in addition to the small constant-head tank supplied with the apparatus; this would tend to eliminate air. (2) Frequent inspection and lubrication (with vaseline) of the needle valves at *A* and *D* to prevent rusting. (3) Modification of the smaller "variable nozzle" at *O*. As supplied, this is 1.5-mm. diameter, and produces a rising velocity of 0.2 mm. per sec. in *H*; they recommend reduction to approximately 0.7 mm., giving a velocity in *H* of approximately 0.05 mm. per sec. (4) After removing as much overflow as desired, to drop the granular residue into *L* by closing *P* and opening *K*, whereupon separation of sand is effected by differential settlement into *M* by opening *P* and varying the water pressure at *N*. Continue this operation until fines rise into *H*, then holding them there by a pinchcock on the rubber tubing joining *L* and *H* until residues are drawn from *M*. Elutriated fractions should be sized microscopically. Mean diameters calculated as the arithmetic mean of the visible microscopic diameters showed reasonable agreement between supposed duplicate samples. Time for complete elutriation tests, making 6 fractions, was 14 to 15 hr.

U.S.B.M. elutriator (Fig. 110) is the present form of the device first described by Gross, Zimmerley, and Probert (*RI 2951*), improved on by Clemmer and Coghill (*129 J 551*), and further improved by Cooke (*RI 3333*). The elutriator column consists of a 60° brass cone *A*, having at its apex a 1/4-in.

hole that can be closed with a rubber stopper *H;* a glass cylinder *B*, 2 in. in height, and a brass top ring *C* fitted with a thin metal overflow rim and spout *J*. Located coaxially with the column is a stirrer comprising a glass tube *E*, to the lower end of which is cemented a cylindroconical brass bulb *I* (60° cones) carrying two perforated brass vanes *K* which clear the elutriator cone by 1 mm. Within the stirrer is glass tube *D* which extends from the bottom to about 2 in. above the level of the pulp overflow, its function being to prevent forcing of air bubbles into the material undergoing elutriation. Immediately above the stirrer is a culluloid grid *G* to prevent swirling of the pulp. Classification water is admitted to cone *A* through *E* via a small Vezin-sampler apparatus comprising a funnel on the upper end of *E*, rotating with it, a small trough extending beyond the rim of the funnel and leading into it, and a micro-spigot of drawn glass delivering outside the periphery of the funnel but intercepted by a trough, the fraction of the stream taken by the trough cutter depending upon its central angle. The spigot is fed from a small constant-level cone, fitted with an overflow pipe, fed in turn from a larger constant-head tank. Arrangement may be made to recirculate overflow.

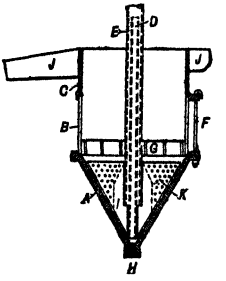

FIG. 110. U.S.B.M. elutriator.

Procedure. Material to be elutriated is first dispersed in distilled water by agitation, using a dispersing agent, if necessary. Extent of dispersion is determined by dark-field microscopic examination. The water-supply tank is filled with distilled water and sufficient dispersing agent to insure continuance of the dispersed condition during the removal of all sizes up to 6- or 10-μ. The supply-tank valve is opened and enough water is allowed to flow into the constant-level cone to insure a slight overflow into a recirculating tank. The smallest cutter is inserted in the feed cone and the stirrer is started. The small amount of water entering the elutriator prevents choking of the orifice at the bottom of the stirrer by coarse particles. Delivery of the spigot is checked and adjusted. Dispersed pulp is now added to the elutriator with enough water to bring the pulp level to within 1 in. of the overflow lip. Overflow is collected in enameled-iron pails. Products are allowed to settle, the supernatant liquid is siphoned off, and the residue is washed into pans, dried, and weighed. The finer sizes may require flocculation before settling can be effected; this may usually be done by the addition of 5 or 10 cc. of a 1% solution of aluminum sulphate. CAPACITY is 120 to 200 gm. of quartz divided into 6 fractions between 52- and 9.3-μ in 8 hr., or 10 fractions between 52- and 2.3-μ in less than 60 hr. Gaudin, Groh, and Henderson (*22 IEC 1363*) describe a modified form of this elutriator, wherein the stirrer is completely eliminated and the elutriator column is lengthened as in the earlier designs. As a consequence of these changes larger capacities are claimed, in apparent contradiction of Cooke's conclusion that capacity is increased by shortening the column.

Use of acetone as described by Gaudin *et al.* (*ibid.*) is an important improvement in elutriation technique. As a consequence of its lower density and viscosity, settling rates are higher, hence time required for a test is materially decreased. The chief drawback is the economic necessity for recovery.

Elutriator design. See p. 117.

14. ELUTRIATION WITH AIR

Sedimentation in air is governed by the same laws as sedimentation in liquids (see Sec. 6, Art. 1), but owing to the lower resistance of air to particle fall, and the less frequent occurrence of Brownian movement in air, separations therein are more rapid and tend to be sharper than in liquids. Likewise the finest product is available in uncemented form as made, while the finest product of water elutriation can never be obtained dry in a completely nonclotted state. Air elutriation is also applicable to substances like cement, plasters, and limes, which react with water to form new and different solid compounds.

Many different forms of apparatus have been used, ranging from the simple device shown in Fig. 111 to the complicated multiple-tube arrangement of Fig. 113.

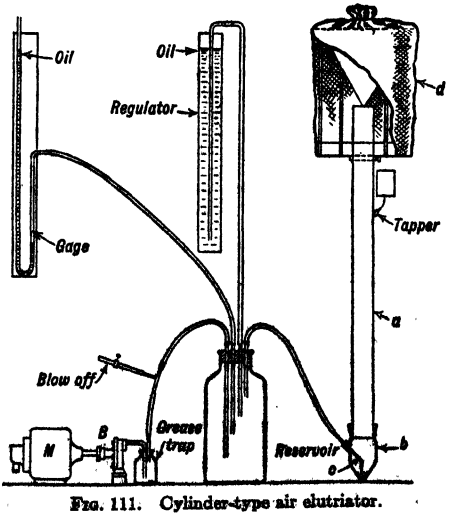

FIG. 111. Cylinder-type air elutriator.

Cylinder-type air elutriator, as developed by U. S. Bur. of Standards (*TP 48 USBS*) consists (Fig. 111) of a vertical cylindrical polished-brass sorting tube *a*, 2.7-in. inside diameter by 60 in. long, with a bulb *b* at the bottom for holding the sample, three nozzles *c*, 0.04-, 0.09- and 0.13-in. diameter, for vary-

ing the velocity of the entering air and hence the intensity of agitation in the bulb and the velocity of the rising air current in the sorting tube, and a collector *d*, about 10-in. diameter by 20 in. high, with canton-flannel covering, for receiving the various solid fractions while passing the air. Air is supplied at constant pressure (ordinarily about 1 lb. per sq. in.) from the reservoir, which is supplied by a motor-driven blower and controlled by a blow-off valve and an oil regulator. The latter is a vertical pipe about 4-in. diameter by 5 ft. long, closed at the bottom and nearly filled with kerosene. A long glass tube, open at the lower end and connected at the top with the reservoir, extends to a point within a short distance of the bottom of the oil-filled cylinder and the back pressure is adjusted by changing the depth of submersion by raising or lowering the tube. In operation the blower is run at a speed sufficient to maintain slightly more than 1 lb. per sq. in. pressure with a small amount of blow-off, and the regulator is then set by trial. The sample taken is <200-m. material, weighs 30 to 50 gm., and is divided into four fractions. The flow of air in the sorting stack is reasonably constant in velocity and uniform across the section; air delivery is not retarded by the sample, if the nozzle tip is kept 1 cm. or more above the surface, nor by the back pressure of the collector sack. The sample must be kept stirred up in the bulb, if operation is to be satisfactory. The dependent factors are air pressure in reservoir, diameters of nozzle, bulb, and stack, shape of bulb, and quantity of sample. Lodgment of material in the separating stack, which would hinder separation, is guarded against by polishing all interior surfaces, beveling the upper rim of the stack to a knife edge, tapping the stack continually during operation with an electric tapper, and so designing the collector that material once therein cannot again enter the sorting tube.

Operation is as follows: (1) With the nozzle that is to be used for the finest separation connected to the reservoir, but not in place in the bulb, start the blower and adjust the speed, blow-off, and oil regulator for a constant pressure of very slightly more than 1 lb. per sq. in. with the regulator blowing off a slight amount of excess air. Disconnect the nozzle, insert it in the bulb, and weigh the two to the nearest 0.01 gm. Add the sample to the bulb (33.33 gm. if the 0.04-in. nozzle is to be used for the finest separation, otherwise 50 gm.), attach to the stack, start the tapper, and connect the air tube. Continue elutriation until the loss per unit of time is at the rate of some predetermined amount (Pearson and Sligh have adopted 0.02 gm. per min.). The end point is determined by stopping blowing some 15 or 20 min. before the estimated time of completion, allowing 30 sec. to 1 min. for material to settle from the stack, then weighing the bulb and contents. Continue blowing 10 min. and again weigh. Repeat until the 10-min. loss is less than 0.2 gm. Interpolate for the weight at the minute when the loss was at the rate of 0.02 gm. per min. Repeat with 0.09-in. and 0.13-in. nozzles.

Actual sizes of the various grades for a given apparatus and material must be determined by microscopic measurement, but once determined, the sizes are reasonably constant for other samples of the same material in the same apparatus With cement, experiment shows that the average diameter reckoned as $D = \sqrt[3]{blt}$, where b, l, and t are the arithmetical means of a number of determinations of breadth, length, and thickness, respectively, of grains, checks very closely with the mean of b for both the air-elutriated grades and the material on 100- and 200-m. sieves. Results of one determination are shown in Table 34.

Shape of bulb is not important except in so far as it determines the amount of material that can be treated with the minimum air stream. Diameter of nozzles need be neither accurately specified nor determined. Diameter of stack should be the least that is consistent with the finest separation, *i.e.*, the least that will give sufficiently low air velocity in the stack when the material in the bulb is properly permeated. At this, the agitation in the bulb when sufficient air is rising in the stack for the coarsest separation will be great. Length of stack has been tested over the range from 5 to 8 ft. and results with the short stack shown to be reasonably concordant with those of the long stack. Abrasion is negligible under conditions of minimum stack diameter. Atmospheric conditions have inconsiderable effects. Small variations in pressure (less than 10% range) may be neglected. Size of sample may range between 25 and 50 gm. without noticeable effect on results.

Table 34. Comparison of average diameter with mean breadth of air-elutriated and screened particles (*after Pearson and Sligh*)

Grade	Mean breadth, b, inch	Average diameter, $\sqrt[3]{blt}$, inch
Rising with 0.04-in. nozzle...	0.00062	0.00066
Rising with 0.09-in. nozzle...	0.00130	0.00129
Rising with 0.13-in. nozzle...	0.00181	0.00178
Not rising with 0.13-in. nozzle but <200-m.....	0.00368	0.00371
100~200-m.....	0.00703	0.00690

Dynamic air analyzer, described by Roller (*TP 490 USBM*), is shown in Fig. 112. Separating column *a* consists of a brass cylinder 9 in. (or 4 1/2, 2 1/4, or 1/8 in.) in diameter and 2 ft. long, reduced at the top to join a 2-in. brass collar, and at the bottom to join a 1-in. brass tube. The 2-in. collar is fitted with a rubber stopper which carries a 3/8-in. copper U-tube, to the end of which a paper thimble *b* is attached by means of another rubber stopper. Attached to the 1-in. tube by means of stout red-rubber tubing is a copper U-tube *c* of 1-in. internal diameter and about 4-in. radius of curvature. Fitted concentrically within this tube and secured thereto by means of a rubber stopper is a tapered glass tube *d*, the tip of which is about 30° off the center line of the U-tube *c*. A series of such tubes with tip diameters ranging from 1- to 5-mm. is required. The left arm of U-tube *c* is attached to a spring *e* by means of a brass collar, also carrying a back-stop lug *f* which limits the amplitude of the vibration imparted to the U-tube by the hammer *g*. All joints and seams in the separator are locked and soldered, and the interior of the separator is preferably gold-plated. Grounding of the U-tubes and separator is said to reduce adherence of material to the walls. Air-supply system consists of a rotary compressor *h*, capable of delivering 1 c.f.m. at a pressure of 15 in. of mercury; a reservoir *i* fitted with

blow-off valve *j* and a mercury manometer for measuring delivery pressure, a drying bottle *k* containing a 50–50 volumetric mixture of sulphuric acid and water, and a capillary flow meter *l*.

FRACTIONATION END POINT adopted by Roller is a rate of loss of 0.1 to 0.2 gm. per hr. With this end point a fractionation usually requires 3 to 6 hr. and a run of five complete fractionations, 24 to 36 hr., for a 25-gm. charge. To operate the elutriator, a 25-gm. charge is dried at 100° C. for an hour, then placed in U-tube, the proper nozzle (of such tip diameter as will give a rate of fractionation of 9 gm. per hr. in the first half hour on the 10-μ fraction, or a higher rate if hardness of the material exceeds 2) is introduced with the tip slightly under the surface of the sample, and the air flow is adjusted to the desired rate by means of stopcock *m* and two-way cock *n*. Elutriation is continued to the end point, when the material in the dust-collecting thimble is removed. The separator tube is then changed and the process is repeated to get the next coarsest fraction. Repetition with different tubes and nozzles yields the different products.

Quality of separation may be gaged by the amount of overlap in sizes between adjacent grades. Table 35 shows results of a microscopic analysis of products from a sample of Portland cement. Overlap was 15 to 20% at the coarse end (more in the 5∼10-μ fraction) and 3 to 5% at the fine end in most fractions, reckoning nominal limits on Stokes' law, and assuming uniform density.

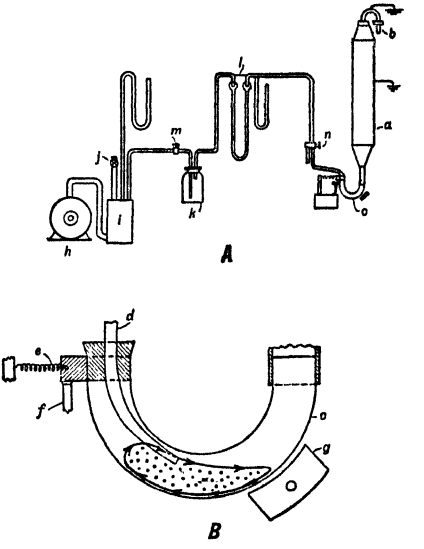

FIG. 112. Dynamic air analyzer.

Infrasizer (Haultain, *40 CIMM 229*) is a multitube air elutriator wherein air-borne particles impinge on a ball (of aluminum, steel, marble, or a golf or ping-pong ball) and pass in a thin high-velocity stream between ball and rubber seat (item *a*, Fig. 113) into conical elutriation tubes (Hollinger-type; tubes of older Lake Shore-type are shaped as in Fig. 112). The elutriation tubes, stainless steel cones of varying angle, of maximum diameters ranging between 2 1/2 in. and 14 in., and length between 2 1/2 and 4 1/2 ft., are series connected by rubber tubing; the

Table 35. Distribution of particle diameters in the various fractions of Portland cement elutriated in the Dynamic elutriator (*after Roller*) *a*

Nominal size, μ	Particle diameters, μ	Number, %	Weight, %	Nominal size, μ	Particle diameters, μ	Number, %	Weight, %
0∼5	<1	77.2	4.8	20∼40	26 to 30	17.9	16.2
	1 to 2	16.8	19.5		30 to 34	13.3	19.5
	2 to 3	2.7	7.5		34 to 38	2.2	4.3
	3 to 4	2.2	31.8		38 to 42	13.3	37.0
	4 to 5	0.7	20.8				
	5 to 6	0.4	15.6	40∼60	15	2.2	0.0
					26 to 30	4.5	0.9
5∼10	4 to 5	10.9	2.1		37 to 40	11.1	5.3
	5 to 7	30.4	12.9		40 to 44	15.6	10.0
	7 to 9	30.4	32.4		44 to 48	20.0	16.5
	9 to 11	26.1	45.1		48 to 52	22.2	23.4
	11 to 12	2.2	7.5		52 to 56	6.7	8.7
					56 to 60	11.1	19.5
10∼20	7 to 8	13.3	1.6		60 to 64	6.6	15.7
	8 to 10	4.5	1.1				
	10 to 12	24.4	10.1	>60	54	4.5	1.5
	12 to 14	15.5	10.6		60 to 64	15.5	7.5
	14 to 16	20.0	24.1		64 to 68	0.0	0.0
	16 to 18	11.1	21.1		68 to 72	26.6	18.1
	18 to 20	6.7	16.8		72 to 76	0.0	0.0
	20 to 21	4.5	14.6		76 to 80	20.0	19.0
					80 to 84	0.0	0.0
20∼40	17 to 18	13.3	3.2		84 to 88	13.3	16.8
	18 to 20	4.5	1.4		88 to 92	15.6	25.6
	20 to 22	11.1	4.6		108	4.5	11.5
	22 to 26	24.5	13.8				

a Particles counted were 850 for the 0∼5-μ fraction and 45 for each of the other fractions.

inlet of the cone of smallest diameter is connected to the air supply and the outlet of the largest cone to a dust-collecting bag. Cones and tubing should be grounded to minimize adherence of particles to walls due to electrification; vibration of the cones (3/8-in. amplitude at 60 s.p.m.) is directed toward the same end. Volume of air supplied to Infrasizer is determined by an orifice in a diaphragm with a differential water manometer tapped in on the high and low sides of the orifice. In normal use a pressure difference of 20 in. water is maintained. A mercury manometer is tapped in on the pressure side to give air pressures (usually 10 in. Hg). Back pressure of 20 to 30 in. water, determined by a manometer, varies with the fineness of the sample and the number of cones in use. If the dust-collecting bag becomes clogged, back pressure increases and may blow out manometer; on the other hand, no back pressure can be maintained if leaks exist in the elutriator system.

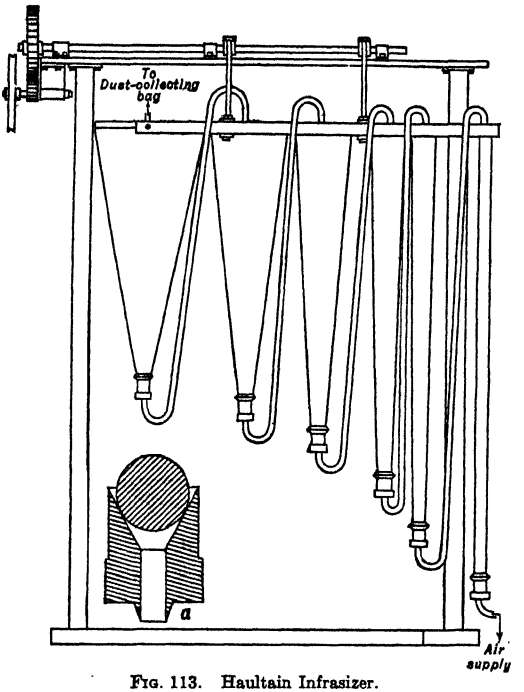

FIG. 113. Haultain Infrasizer.

By using cone diameters which vary as $\sqrt{2}:1$, the average particle diameters of successive products decrease by the ratio $1/\sqrt{2}$. At LAKE SHORE (*29 CIMM 279*) the coarsest fraction had nominal limits of 56~40-μ, which corresponds to 270~380-m.; hence the Infrasizer gives a fairly close continuation of the Tyler series. NOMINAL MICRON SIZE of a fraction is the diameter of glass spheres having the same settling rate as the irregularly shaped ore particles of varying specific gravity. At LAKE SHORE such nominal sizes are approximately correct for quartz, and the sizes of heavier particles bear a rough inverse relationship according to their specific gravities (see Table 36).

Variables in Infrasizer operation are: (*a*) weight of sample, (*b*) air flow, (*c*) time allowed for separation.

Weight. Samples ranging from 50 to 1,000 gm. have been elutriated successfully, but if a particular fraction is unduly large, a condition known as CROWDING (similar to screen crowding) may exist, and the sample weight must be adjusted to eliminate it. If the sample weight is too small, say 100 gm. or less, the three fine fractions of some materials hold up and do not elutriate properly.

Air flow, as indicated by the differential manometer, determines the velocity within the separators, and hence controls the nominal limits of the fractions. It must therefore be standardized.

Running time depends upon the size of the sample, the degree of separation desired, and the nature of the material. At LAKE SHORE, tests were run until the rate of change of the >28-μ and the <10-μ material did not exceed 0.5% with a 15% increase in time. The running time, to this end point, varies directly as the weight of the sample, and can be approximated by the equation $t = (W + c)/c$, where t = time in hr., W = weight of sample in gm., and c is a constant which varies with the material and its previous history. For samples weighing 400 and 800 gm. the respective times were 3 1/2 and 6 hr.

Table 36. Variation of particle size with specific gravity in Infrasizer products at Lake Shore

Nominal quartz size	Relative sizes in microns		
	Pyrite	Telluride	Gold
<10	<8	<6 1/2	<5
10 to 14	8 to 11 1/2	6 1/2 to 9 1/2	5 to 7
14 to 20	11 1/2 to 16	9 1/2 to 13	7 to 10
20 to 28	16 to 23	13 to 19	10 to 14
28 to 40	23 to 32	19 to 26	14 to 20
40 to 56	32 to 46	26 to 38	20 to 28

Routine testing. When only two sub-sieve fractions are required, the Infrasizer may be run as a single-tube elutriator by removing all cones save one. Using only the 5-in. cone, Haultain (*ibid.*) re-

ports a running time of 30 min. for 20-gm. samples of MACASSA tailing. REPRODUCIBILITY was excellent; for eleven consecutive runs the weight in grams of the >28-μ material was 5.54 ± 0.02.

Elutriator design seeks (1) complete dispersion of the sample in the fluid, (2) constant fluid velocities with a plane velocity front through the various separator tubes, (3) short treatment time for a given weight of sample, while maintaining high quality of separation, (4) good separation as measured by the extent of overlap between grades, (5) production of grades of nominal sizes that continue the Tyler standard sieve scale, (6) minimum attrition.

Dispersion is of utmost importance in fine separations but relatively unimportant in making the coarser fractions. The tendency of the smallest particles to adhere to larger particles and to each other is overcome in water elutriators by the use of a dispersing agent; saponin, sodium silicate, sodium hydroxide, ammonium hydroxide, agar agar, gum arabic, glue, tannic acid, etc., have been used. See also Sec. 12, Arts. 7, 8, 10, 42, and Sec. 15, Art. 3. Adhesion of particles to the walls of the elutriator is rare with glass; with metal, adhesion has been reported and is probably due to an interaction between the metal (or surface products thereof) and the particles. Metal elutriator parts may also affect dispersion by reason of interaction products with the elutriator fluid. The adverse effect of galvanized iron and zinc is reported by Cooke (*loc. cit.*), who recommends the use of Allegheny metal. Water containing unknown dissolved salts is always suspect; distilled water is preferable. In air elutriators dispersion is achieved mechanically by impinging a high-velocity air jet on the sample, as in the cylinder and dynamic elutriators, or by forcing the sample through a high-velocity jet, as in the Infrasizer. The shearing action thus obtained breaks up agglomerates. Adhesion of particles to walls is decreased by grounding the tubes to eliminate electrostatic attraction, and by vibrating to jar material loose.

Constant fluid velocities are necessary because fluctuations increase overlap between grades. Flow meters, preferably of recording type, should be employed. Capillary flow meters for water clog easily. Introduction of the charge is usually accompanied by a back pressure which changes during the run, and between runs for single-tube elutriators. Correction of this back pressure is necessary, if accurate sizing is desired. A parabolic velocity front may vary from zero at the walls to approximately twice average at the center; such a front is probably responsible for most of the overlap at the coarse end of the various fractions. Attainment of a plane velocity front in separator tubes is probably impossible. Stream-line flow is attained by a length : diameter ratio > 10 : 1. Neither is necessary for precision sizing.

Sample size. If further testing, *e.g.*, assaying, of elutriator products is contemplated, it may be necessary to elutriate samples weighing 300 to 1,000 gm. If elutriator capacity is too small but the elutriator gives reproducible results, the sample may be split into a number of smaller samples and the products combined, but the time element is then prohibitive. The structural factors determining allowable sample weight in one run are not well understood. In general, for water elutriators, an increase in diameter of the separating column permits use of larger charges. If stream-line flow is desired, increase in diameter should be accompanied by increase in length. Cooke has demonstrated that length may be decreased without affecting separation adversely. In air elutriators of the cylinder and dynamic types (Figs. 111, 112) the weight of charge is determined by the size of the bottom roughing elements. If these are increased in size, air volume must be increased to maintain minimum suspending velocities (Sec. 9, Eqs. 14, 15, 16); hence stack diameter must be increased to produce same nominal size. With the Infrasizer, an increase in the diameter of the cylindrical portion of the rubber plug, with consequent increases in length and diameter of the cones, will probably increase permissible sample weights.

Time for elutriation of a given sample weight to a fixed end point may be shortened by series connecting elutriator tubes of proper dimensions. The structural factors affecting elutriation time in single-tube elutriators are practically unknown. Cooke (Fig. 114) shows that shortening the column decreases elutriation time.

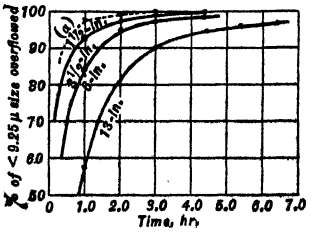

a Theoretical.

FIG. 114. Length of column *vs.* time for elutriation.

Quality of the separation depends upon the elutriation time, end point, constancy of fluid flow, completeness of dispersion, and the nature of the velocity front in the separator tubes. Elutriation rate (Fig. 114) decreases sharply at first, then more gradually until it finally becomes almost constant. The chosen end point should lie on that portion of the curve which is substantially parallel to the time axis. Samples of different weight elutriated for a time sufficient to reach this end point will probably yield grades of equal quality. It is impossible to compare results with different elutriators or with the same elutriator on the basis of published data because these, with few exceptions, are not in a form that permits calculation of overlap. OVERLAP should be stated. A suitable standard material should be adopted for use in CALIBRATION. Different END-POINTS should be adapted for rough work, for precision sizing, and for routine testing.

Size scale. Production of grades whose nominal size decreases by $1/\sqrt{2}$ is relatively easy. For single-tube elutriators fluid velocity is adjusted to give the desired grade for an elutriator tube of given diameter, and thereafter velocity is decreased or increased by a factor of $1/_2$ or 2 respectively. For multi-tube elutriators the diameters of successive tubes increase in the ratio of $\sqrt{2}$: 1 and the diameter of the smallest tube is chosen so that its lower nominal limit is approximately 52-μ. Under these circumstances velocities in successive tubes decrease by one-half, hence nominal sizes decrease by $1/\sqrt{2}$.

Attrition is nonexistent in water elutriators without stirrers. The stirrer in the apparatus of Fig. 110 was shown in tests with quartz, tripoli, and galena not to produce fines. Similar tests on the dynamic elutriator (Fig. 112) and the Infrasizer indicated lack of attrition.

15. MICROSCOPIC SIZING

Microscopic sizing is the only method which measures particles by direct comparison with a scale. This makes it an excellent check on other methods of sizing. Measurement may have for its object either (*a*) allocation of particles to size fractions according to the magnitude of one or more of the particle dimensions, or (*b*) determination of a linear dimension of a particle or particles.

Accuracy depends upon the nature and quality of the optical equipment and the mount, and upon the method of measurement. Other things being equal, accuracy of linear microscopic measurements is relatively unimportant in item *a* above, provided elementary rules are obeyed to insure good image formation, since allocation of particle to a particular size fraction is accomplished by comparison with the image of a ruler grid focused in the plane of the object or in a plane conjugate therewith. In case *b* accuracy of the linear measurement depends upon the mechanical accuracy in the instrument and upon optical limits controlling the fineness of the image. The width of the outlines in an image depends primarily upon the resolution and secondarily upon the focus, the illumination, and upon the relative indices of refraction of material and mount. The limit of width of the outlines is approximately equal to the resolving power. For axial illumination using an objective of 1.40 N.A. the limit is approximately ± 0.25-μ. This leads to an inescapable error of about 2.5% if the particle dimension is 10-μ and the error increases as particle size decreases. This fundamental fact is too often overlooked. Although accuracy of linear measurements can be improved by averaging repeated measurements of the same dimension, or by using oblique illumination, these expedients are rarely used. With the advent of the electron microscope with a limit of resolution of 0.005-μ, measurement of particle dimensions of, say, 0.1-μ with a precision of 2 to 5% is possible.

Optical system for accurate measurement should produce an image that is flat to the edges of the field, and is as free from spherical and chromatic aberrations as it is possible to attain. Any good high-power microscope (Art. 9) fulfils these requirements. It should be equipped with binocular vision, apochromatic objectives, and compensating oculars of the flat-field type. A petrographic microscope has the additional advantage of identification under crossed nicols.

Mounting (*ASTM E 20-33T*): (1) Particles shall be essentially in one plane. (2) Particles shall be free from motion. (3) Particles shall be dispersed, showing individual grains instead of aggregates and floccules. (4) Particles shall not be ground in mounting. (5) The mount shall be truly representative of the distribution of sizes in the material. The method of mounting is so closely dependent upon the physical and chemical properties of the sample that no technique universally applicable can be given. In general, however, procedure involves mechanical or chemical dispersion of the sample in a solution of a fixing agent and a volatile solvent. After evaporation of the solvent the fixing agent cements the particles to the slide. Dunn (*2 IECA 15*) used balsam in xylol, Green (*16 IEC 667*) used dammas in turpentine, Gehman and Morris (*4 IECA 157*) used rubber cement, Cooke (*RI 3333*) used gelatin in water. Other mounting media suggested are 0.5% glycerol in alcohol, styrax in xylol, the chlorinated naphthalenes, and saponin.

Detailed procedure (after Weigel, *TP 296 USBM*): Slides should be about 50×75 mm. Dilute the sample in a test tube with distilled water until it appears cloudy or very slightly milky on shaking. A drop or two of ammonia aids dispersion with clays. Pour off until the tube is about one-third full, agitate by blowing through a pipette, then quickly transfer a few drops to the slide, covering an area about 20-mm. diameter. Dry in an air bath at 105° C. Particles should be spaced with little or no overlapping and no flocculation. New slides should be prepared until this condition obtains. The slide may be used uncovered for work with 4-mm. and longer objectives and these should, therefore, be corrected for use without a cover glass. For the finest material (1-μ or less) an oil-immersion lens must be used and the slide must be mounted with a cover glass. Glycerine (index refr. = 1.47) is satisfactory for most nonmetallic minerals. Methylene iodide (index refr. = 1.74) is used for clays and talcs, if necessary, but it produces diffraction rings. To mount, place a drop of the mounting liquid on the center of the dried sample, drop the cover (35×50 mm.) into place and work it down with slight pressure and a rotary motion. Remove excess liquid with a filter or blotting paper, then run a ring of melted paraffin around the edge, using a fine camel's-hair brush. An excess of mounting liquid may result in washing fine material from under the edges of the cover and ruining the slide. If the sample is predominantly <6-μ it is used directly; if the distribution range is greater than this, rough separation by elutriation into 4 to 5 fractions is recommended.

Observation

Direct observation may be made with a Filar micrometer (*TP 48 USBS*), a co-ordinate-ruled eyepiece micrometer (Weigel, *loc. cit.*), or a co-ordinate-ruled scale, an image of which is formed in the object plane by the substage condenser (Ives, *154 JFI 73*). The last method permits binocular vision and the use of any desired combination of objective

and ocular without altering the relative magnification of scale and object, since the image of the scale is formed in the object plane. The eyepiece micrometer may conveniently be ruled with 6 or 8 squares on a side of the inscribed square of the field and with one of the larger squares subdivided. The sizes of most particles can be estimated from the large open square, but the subdivided square can be used, if necessary, to measure the smallest particles.

Manipulation. Set the sample slide so that the field is in one corner. Have the microscope fitted with lowest-power objective. Search the field for the largest particle, estimate the mean of the two principal dimensions exposed to the nearest 5-μ, then, beginning at one corner of the inner square, work over all squares in order, counting and recording the number of particles within this range. Repeat this process with successive fields until the whole slide is worked over, making as many counts as seem necessary to obtain a fair average of the grains per field. Repeat with the higher-powered objectives, narrowing the range of sizes each time, and counting fewer squares per field but the same number of fields as with the first objective. The range of the 16-mm. objective with 10× ocular (100 diam.) is convenient down to 30-μ; the 8-mm. objective (200 diam.) from 30- to 10-μ; the 4-mm. (430 diam.) from 10- to 1-μ; and the 1.9-mm. oil-immersion lens (950 diam.) for <1-μ materials.

Check on the relation of counts with different objectives was obtained by Weigel by re-counting the smaller size with an objective with the next higher power and reducing the results to equivalent areas. Eighty fields were counted with the 16-mm. objective, 40 with the 8-mm., and 20 each with the 4-mm. and 1.9-mm. The more uniform in size the material counted, the smaller the number of fields necessary.

When the slide is representative of a long-range sample, the procedure is the same, except that more fields and more squares per field must be counted on each slide, yet the total microscopic work is less than when elutriation is practiced. The time for a total-sample measurement including calculation is 5 to 6 hr. An elutriation test requires about 3 days, and the count and calculation one day more. Less skill and experience are needed for an elutriation test.

Projection of the image upon a ruled screen has the advantages that (*a*) it permits greater magnification than direct observation, and (*b*) it allows focusing through the

12 – 17 – 20

Zinc Oxide # 3 B 1st

Millimeters, mm.	Tally	Frequency, f	$f \times mm.$	v	v^2	$f \times v^2$ (Σv^2)
6						
7						
8						
9						
10						
11	𝍸 III	8	88	4.44	19.71	157.68
12	𝍸 I	6	42	3.44	11.83	70.98
13	𝍸 𝍸 𝍸 IIII	19	152	2.94	5.95	113.05
14	𝍸 𝍸 𝍸 𝍸 𝍸 𝍸 𝍸 𝍸 𝍸 III	53	477	1.44	2.07	109.71
15	𝍸 II	82	820	.44	.19	15.58
16	𝍸 𝍸 𝍸 𝍸 𝍸 𝍸 𝍸 𝍸 𝍸 I	96	506	.56	.31	14.26
17	𝍸 𝍸 𝍸 𝍸 𝍸 𝍸 IIII	34	408	1.56	2.43	82.62
18	𝍸 𝍸 II	12	156	2.56	6.55	78.60
19	𝍸	5	70	3.56	12.67	63.35
20	II	2	30	4.56	20.79	41.58
21	II	2	32	5.56	30.91	30.90
22	I	1	17	6.56	43.03	43.03
23	I	1	18	7.56	57.15	57.15
19	I	1	19	8.56	73.27	73.27
20	I	1	20	9.56	91.39	91.39
21	I	1	21	10.56	112.40	112.40
22	I	1	22	11.56	134.60	134.60
23	I	1	23	12.56	158.80	158.80
		276	2841			1449

FIG. 115. Record of count of photomicrograph (*after Green*).

depth of the mount, insuring proper focus and count of all particles. Projection at right angles to the axis of the instrument is achieved by means of a mirror or a right-angle prism situated above the ocular; projection along the instrument axis is effected by the same objective and ocular that are used in visual work by adjusting the focus of the objec-

tive to form a primary image outside the focal plane of the ocular. Projection requires an intense source of illumination; an arc light equipped with condensers and cooling cell is admirably suited to the purpose.

Photomicrographic method (*Green, 192 JFI 637*) involves photographing the microscopic image and subsequently measuring the particles from a print or a projection of the negative on a screen. It has the decided advantage of making a permanent record. It also enables visual comparison of two or more samples. Particular attention must be paid to the mount so that all particles are in one plane.

Green's technique is to place about 1 mg. of the material on the center of the slide and cover with a drop of redistilled turpentine. Rub out with a straight, smooth glass rod, stroking lengthwise of the slide. Continue rubbing until the mixture is thick enough to prevent particles from floating and flocculating but thin enough not to streak, then stop with a slight lift on the last stroke to leave a wedge-shaped deposit and to yield fields of different intensities from which to choose the one for photographing. Evaporate the turpentine completely on a hot plate at a temperature that completes the drying in 40 to 50 sec. Mount with glycerine as described by Weigel (p. 118). Silverman and Franklin (*24 J. Ind. Hyg. & Tox. 51*) claim that such treatment causes comminution of the sample.

The photograph is taken with transmitted light that is absolutely axial. Fine-grained contrast plates are easiest to handle, but panchromatic plates give better detail. The important point in photography is sharp definition of particle edges. The negative should show 200 to 250 particles. Measurement is made by projecting on a screen so that the total magnification is 20,000 to 25,000 diam. and measuring with a millimeter rule to the nearest whole millimeter. Fig. 115 shows a form of record and calculation.

16. SIZING BY SEDIMENTATION

Sedimentation methods for the determination of size distribution may be classified according to the variable measured as follows: (*a*) measurements of the variation of density, (*b*) measurements of the variation of hydrostatic pressure, (*c*) measurements of the change in weight of an immersed body, and (*d*) measurements of weight of sediment deposited.

Principles. The theory underlying all of these methods is the same (see Oden *et al.*, *36 #3, 4 Proc. Roy. Soc. Edin. 219; 44 Proc. Roy. Soc. Edin. 98*), and is predicated on the fulfillment of the following physical requirements: (1) complete dispersion of particles while under test, (2) uniform distribution of particles throughout the liquid at the beginning of the test, (3) maintenance of constant temperature during test, so that no convection currents occur during sedimentation, and (4) a concentration so dilute that particles do not interfere with one another during their fall through the liquid, and that the density of the suspension never varies greatly from that of the liquid.

Density of a suspension at the beginning of a sedimentation test is given by

$$G = G_l + W_s(G_s - G_l)/G_l \tag{39}$$

where G = density of suspension, G_l = density of liquid, G_s = density of solid, and W_s = weight of solid per unit volume of suspension. At some later time t and some level x units below the surface, the density $G_{(x,t)}$ will have changed since some of the material in suspension has settled; particles with velocity $v > x/t$ will have settled below the level x, whereas particles with velocity $v < x/t$ will remain in the same concentration as at the beginning. If f denotes the fractional weight of particles which fall with a velocity less than v, there will remain fW_s grams of particles per cc. of suspension, hence

$$G(x,t) = G_l + fW_s\left(\frac{G_s - G_l}{G_s}\right) = G_l + fc \tag{40}$$

where $c = W_s(G_s - G_l)/G_s$ is a constant under fixed experimental conditions. When the fractional weight of particles having settling velocities between v_1 and v_2 is a desideratum of the test, it is customary to use the rate of change of f with respect to v, *i.e.*, $V = df/dv$, when Eq. 40 becomes

$$G(x,t) = G_l + c\int_0^V V\,dv \tag{41}$$

since

$$\int_{V_1}^{V_2} V\,dv = \int_{v_1}^{v_2}\frac{df}{dv}\,dv = \int_{v_1}^{v_2} df = f_{v_2} - f_{v_1}$$

When a distribution curve is drawn with reference to ordinate V and abscissa v, the area under the curve represents f. If the required range of v is too large, it may be necessary to condense this coordinate by the use of $\ln v$; then the ordinate is changed to vV in order that the area under the curve shall still represent f, *i.e.*,

$$X = \ln v \qquad Y = vV \tag{42}$$

In place of falling velocity v, equivalent radii or diameters may be used as abscissae. EQUIVALENT RADIUS is obtained by solving Stokes' law for the radius of a sphere having the same density and rate of fall as the material under test, *i.e.*,

$$a = k\sqrt{v} \quad \text{where } k = \sqrt{\frac{9b}{2g(G_s - G_l)}}$$

and b is the viscosity of the fluid. The co-ordinates of the distribution curve become

$$\begin{aligned} X &= \ln \frac{a^2}{k^2} & X &= 2\ln a - 2\ln k \\ V &= 1/2 \frac{k^2}{a} U & Y &= 1/2\, a\, U \end{aligned} \tag{43}$$

where $U = \dfrac{df}{da}$.

Measurements of variation of density:
From Eq. 40

$$dG = c\left(\frac{\delta f}{\delta x}dx + \frac{\delta f}{\delta t}dt\right)$$

Case I: Densities at various depths are measured simultaneously; then $dt = 0$ and

$$\frac{\delta G}{\delta x} = c\frac{\delta f}{\delta x} = c\frac{\delta f}{\delta v}\frac{\delta v}{\delta x} = \frac{c}{t}\frac{\delta f}{\delta v} = \frac{c}{t}V$$

Therefore

$$X = \ln v \qquad Y = vV = \frac{x}{c}\frac{\delta G}{\delta x} \tag{44}$$

Case II: Density is measured at different times at the same depth; then $dx = 0$ and

$$\frac{\delta G}{\delta t} = c\frac{\delta f}{\delta t} = c\frac{\delta f}{\delta v}\frac{\delta v}{\delta t} = -\frac{cx}{t^2}V$$

Hence

$$X = \ln v \qquad Y = -\frac{t}{c}\frac{\delta G}{\delta t} \tag{45}$$

Measurements of variation of hydrostatic pressure.
Let $p(x, t)$ denote hydrostatic pressure at a depth x at any time t, then

$$\int_0^x G(x,t)\,dx = p(x,t) \quad \text{or} \quad \frac{dp}{dx} = G \tag{46}$$

Case I: Hydrostatic pressure is simultaneously determined at different depths, then

$$\frac{\delta G}{\delta x} = \frac{\delta^2 p}{\delta x^2} = \frac{c}{t}V \quad \text{or} \quad V = \frac{t}{c}\frac{\delta^2 p}{\delta x^2}$$

Hence

$$X = \ln v \qquad Y = \frac{x}{c}\frac{\delta p^2}{\delta x^2} \tag{47}$$

Case II: Hydrostatic pressure is measured at the same depth at different times. By partial differentiation of Eq. 46 (neglecting infinitesimals of higher order) it can be shown that

$$\frac{\delta^2 p}{\delta t^2} = -v\frac{\delta G}{\delta t} = \frac{cv^2}{t}V$$

Hence

$$X = \ln v \qquad Y = \frac{t^2}{cx}\frac{\delta^2 p}{\delta t^2} \tag{48}$$

Measurement of change in weight of an immersed body. Let W_a = weight of body in air, W_s = weight required to counterpoise body in partly submerged condition, and A_p = cross-sectional area of body.

Then $W_s = W_a - A_p p$. Hence

$$\frac{\delta W_s}{\delta t} = -A_p\frac{\delta p}{\delta t}$$

and

$$\frac{\delta^2 W_s}{\delta t^2} = -A_p\frac{\delta^2 p}{\delta t^2}$$

And the co-ordinates become

$$X = \ln v \qquad Y = -\frac{ct^2}{A_p x}\frac{\delta^2 W_s}{\delta t^2} \tag{49}$$

Measurement of weight of deposited sediment. For most practical problems the co-ordinate equations may be written as

$$X = \ln v \qquad Y = -\frac{t^2}{W_{s,\infty}}\cdot\frac{\delta^2 W_s}{\delta t^2} \tag{50}$$

These equations are approximations, justified only when the density of the suspension never differs appreciably from the density of the suspending liquid; otherwise a correction is necessary because the

weight of the deposit on the pan is determined in suspension and not in pure liquid. (For the derivation and discussion of correction see *19 Soil Science 9.*)

These sedimentation equations form the basis of a number of experimental procedures designed to determine the distribution curve.

Pipette methods for determining size-distribution curves measure the variation in density at a fixed depth within the suspension at different times or at a variable depth at different times. Illustrative of the former are methods described by Olmstead *et al.* (*TB 170, U. S. Dept. Agr.*) and Keen (*Physical Properties of the Soil*, Longmans, Green); Eqs. 45 are directly applicable for the interpretation of the results. Andreasen's pipette method is an example of the latter.

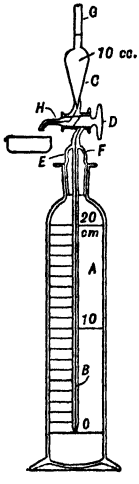

FIG. 116. Andreasen pipette.

Andreasen pipette (*19 Z 698; 20 Angew. Chem. 283*) consists of a graduated cylindrical flask *A* (Fig. 116) and a pipette *B* connected to a 10-cc. reservoir *C* by means of a three-way stopcock *D*. The ground glass stopper *E* has a small opening *F* permitting influx of air into the sedimentation flask when samples are withdrawn. The tip of the pipette is in the plane of the zero mark when the ground-glass stopper is properly seated.

Method of operation. A 3 to 5% suspension of the sample, properly dispersed in the sedimentation fluid, is added to the flask. The pipette is introduced and cylinder and contents are placed in a constant-temperature bath and allowed to come to equilibrium; when the apparatus is removed, a finger is placed over hole *F* and the suspension is agitated by inversion. When agitation ceases, a timer is started and the apparatus is returned to the bath. After given intervals of time, a sample is withdrawn by putting the pipette into connection with the reservoir by means of stopcock *D* and applying steady suction at *G* until a 10-cc. portion is withdrawn. This should not take more than 0.5 min. The new level of the suspension is noted and recorded. The sample is removed through *H* and analyzed for solid content.

Calculation. If c_0 = concentration of original suspension and c_t = concentration of suspension at level h at time t (as determined by analysis) then c_t/c_0 = fraction of the original quantity of material having a particle size smaller than the size corresponding to a falling velocity h/t, since all larger sizes will have fallen below the tip while the concentration of smaller sizes is unaltered. Table 37 shows the results of a sedimentation test. Column 3 gives the distance of the pipette tip from the suspension level in cm., column 4 gives the equivalent diameter in microns calculated from

$$D = 141\left(\frac{hb}{t(G_s - G_l)}\right)^{1/2} \qquad (51)$$

where D is in μ, h in cm., b in poises, and t in min. Columns 5, 6, and 7 give per cent. passing an aperture of the corresponding equivalent diameter for three runs on the same material. REPRODUCIBILITY appears to be good.

Time required for pipette testing depends upon the number of readings taken and upon the lower limit of the sizing; it may vary from 1 or 2 days for sizing to 10-μ to 7 or 8 days for sizing to a fraction of a micron. The SIZE RANGE that can be covered by this pipette method depends upon the viscosity of the sedimentation fluid; glycerine may be used to cover the range from 300- to 3-μ, ethylene glycol from 100- to 1-μ, and water from 30- to 0.3-μ.

Table 37. Sedimentation of calcined flint (*a*) in ethylene glycol *b*
(*after Andreasen*)

Run No.	Time, min.	h, cm.	d, μ	% passing		
				Exp. 1	Exp. 2	Exp. 3
0	0	20.0	.....	99.2	99.0	99.0
1	5	19.6	111.3	97.6	97.0	96.0
2	15	19.2	63.6	76.0	75.3	74.0
3	45	18.7	36.3	49.0	47.8	46.8
4	150	18.3	19.7	28.8	29.0	28.2
5	450	17.9	11.2	19.0	18.0	17.4
6	1,380	17.4	6.35	11.0	10.5	10.2

a Sp. gr., 2.44.
b Sp. gr. at 20° C., 1.11; viscosity at 20° C., 0.214 poise.

Pressure-change methods, designed to measure pressures at different points within the sedimentation tube at the same time, have not proved successful because of experimental difficulties. On the other hand, methods based upon the measurement of pressure changes with time at a given point in the tube have been fairly successful. The original apparatus devised by Wiegner (*91 LVS 41*) consists of a cylindrical sedimentation tube of fairly large diameter, to which is attached a tube of smaller diameter which acts as a manometer. The manometer is parallel to the sedimentation tube and is provided with a stopcock near the point of connection. In operation the manometric tube is filled with sedimentation fluid, free of suspended particles, to the level of the suspension

in the sedimentation tube. When the stopcock is opened, liquid level in the manometer first rises then falls as sedimentation progresses. Since the pressure changes are small, ACCURACY is poor. Subsequent changes in design were prompted in the attempt to increase the sensitivity of the manometer. Improvements were made by Ostwald (*30 Koll. Ztschr. 62*), Zunker (*58 Landw. Jahrb. 159*), Goodhue and Smith (*8 IECA 469*) and others.

Goodhue and Smith sedimentation tube (Fig. 117) consists of a large tube *A*, 4.5(diam.)×50-cm., surmounted by a smaller tube *C*, 2.5(diam.)×40-cm., with a jacketed manometer tube, *B*, 4-mm. i.d. joined through a 3-mm. stopcock *D*, 13 cm. from the bottom of *A*, and through a similar stopcock *E*, 8 cm. from the top of *C*. A scale *S* is placed inside the jacket, which is then evacuated to reduce temperature effects. A 2-mm. stopcock *F* is provided for adjustment of level. Increase in manometric sensitivity is attained by using two fluids in the manometer tube, the lower fluid being the sedimentation fluid free of any suspended matter, and the upper an immiscible fluid of lower density. Goodhue and Smith use 50% alcohol for the sedimentation fluid and decahydronaphthalene for the upper fluid. Density of the decahydronaphthalene is adjusted by additions of 1,2,4-trichlorobenzene, rendered visible by the addition of a small amount of a highly colored oil-soluble dye. After compounding, the top fluid is extracted with the sedimentation fluid to remove materials soluble in the latter and to saturate the top fluid with sedimentation fluid. Rise H in the manometer is given by the equation

$$H = \frac{h(G_s - G_l)}{(G_l - G_t)} \qquad (52)$$

where h = settling height and G_t = density of the upper manometer liquid. It is apparent that H can be increased by decreasing the difference in density between the upper manometer liquid and the sedimentation liquid. A change in density of 0.00002 gm. per cc. is easily detected with the liquids mentioned, where G_l = 0.9280 gm./cc. and G_t = 0.900 gm. per cc.

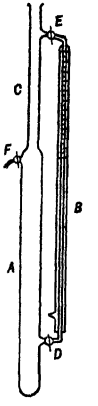

FIG. 117. Goodhue and Smith sedimentation tube.

Operation. Clean thoroughly and rinse apparatus with 50% alcohol. Fill to stopcock *F* with sedimentation fluid and a small amount of dispersing agent, if necessary. Fill manometer tube by tilting, and close stopcocks. Pour out some of the sedimentation fluid from *A* and introduce previously dispersed sample, about 7 gm., washing it down with more sedimentation fluid, and finally adjust level until overflow takes place through stopcock *F*. Place apparatus in constant-temperature bath. When temperature equilibrium is attained, stir suspension with the aid of a plunger and introduce upper manometric liquid into *C*, taking care not to disturb the upper layer of the suspension. Open stopcocks *D* and *E*. The top fluid rapidly replaces suspension fluid in part of the manometer tube and equilibrium is reached in about 2 min., after which readings may begin. The timer is started 30 sec. after the plunging of the suspension (time required for eddy currents to die out). For determination of size apply Eq. 48. For method of application see p. 124. Test sedimentation curves on sulphur, clay, and calcium arsenate are shown in Fig. 118.

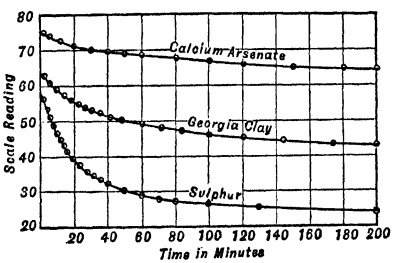

FIG. 118. Sedimentation curves (*Goodhue and Smith*).

Hydrometer method described by Pratolongo (*50 Le Stazioni sperimentali agrarie italiene 117*), Bouyoucos (*23 Soil Science 319, 343*), and adopted as a standard method of mechanical analysis of soils (*ASTM D 422–39*) consists in measuring the density of the suspension contained in a graduate at given intervals of time. In Pratolongo's method the plummet is suspended from a Westphal balance and its changes in weight with time are recorded, maintaining the plummet at the same depth within the suspension. Eq. 49 is directly applicable for the determination of the distribution curve; for method see p. 124. In the Bouyoucos and A.S.T.M. methods the depth to which the hydrometer is immersed depends upon the density of the suspension, hence it varies with time. If d_o = original reading of the hydrometer, d_∞ = hydrometer reading after long period of time, and d = reading at time t, then

$$V = \frac{2t^2}{a} \cdot \frac{d^2H}{dt^2} \qquad (53)$$

where

$$H = \frac{d - d_o}{d_\infty - d_o}$$

In order to calculate the equivalent radius from Stokes' law, the distance through which the particles fall in a given time must be known. This distance is usually taken as the

distance between the surface of the suspension and the center of volume of the bulb of the hydrometer. This EFFECTIVE DISTANCE x_E may be computed from the constants of the hydrometer and the graduate used in making the test. Substitution of x_E in the equation $a = k\sqrt{x_E}$ gives the equivalent radius directly.

Procedure. A 3% suspension, properly dispersed by mechanical agitation, with addition of a suitable dispersing agent if necessary, is added to a graduate. The open end of the graduate is closed with a stopper, preferably cork, and the contents are mixed by inversion. Upon cessation of mixing, a timer is started and hydrometer readings are taken at desired intervals of time. After each reading the hydrometer is carefully removed, to prevent accumulation of solids thereon, wiped dry, and placed in another graduate containing water. The usual time intervals are 1, 3, 10 and 30 min., and 1, 3, 5, and 24 hr. Because of inability of the operator to follow rapid changes in density, this method should be used only with very fine suspension, say <400-m. for material with a gravity of 2.6. ACCURACY is increased by immersing the graduate in a constant-temperature bath and bringing the hydrometer to the same temperature before each measurement.

Simple sedimentation balance described by Bond (*A TP 1129*) consists of an ordinary analytical balance with the left-hand pan replaced by a sedimentation pan suspended in a 1,000-cc. cylindrical glass jar. The jar is fitted with a metal screw top which has a 4-mm. hole drilled in its exact center, to permit passage of the stem of the sedimentation pan. The pan is made from a noncorrosive metal disk 9-cm. diameter, slightly dished to prevent entrapment of air bubbles on the underside, and having a $^1/_2$-cm. rim around the edge. The stem, made of $^1/_8$-in. stainless-steel rod threaded at one end, is attached to the pan by means of bronze nuts and washers. The other end of the stem is shaped to hang from the balance-pan hanger. A notch 11 cm. above the pan is filed on the stem. The sedimentation jar rests on a V-shaped support which clears the balance-pan arrest; when so supported the sedimentation pan is $^1/_2$ cm. from the inside bottom of the jar. The stem carries a 00 rubber stopper which is used to seal the 4-mm. hole in the cover when shaking. A second hole in the cover is used for addition and removal of water and the introduction of a thermometer.

Operating procedure. Carefully determine the average inside diameter of the jar, the diameter of the sedimentation pan, depth of the liquid, and distance of pan from the inside bottom of the jar. Calculate the fractional volume of suspension that is vertically above the sedimentation pan; this fraction is called the volume fraction and is denoted by V_f. Calculate the weight of sample, W_s (in milligrams), required so that the ultimate weight increase of the pan will be 2,000 mg.

$$W_s = \frac{2{,}000G_s}{V_f(G_s - G_l)} \tag{54}$$

Fill the jar with a 0.25% solution of NaCl in distilled water up to the 11-cm. notch on the pan stem and prepare a tare weight which balances the immersed pan. The calculated weight of <200-m. sample (Eq. 54) is now added, together with 5 drops of a 15% solution of sodium silicate; the lid is sealed on with adhesive and the suspension is blunged with the sedimentation pan for 1 min. The stopper is now pressed down on the central hole in the lid and the jar swung through a 90° arc at the rate of one swing per second for one minute. At the end of the agitation period start a timer. Place the jar in the balance and determine and record the times required for the collected sediment to balance a series of weights added to the right-hand balance pan. The ultimate weight is obtained after overnight settling.

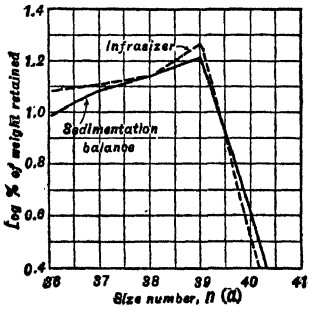

a See Art. 14.

FIG. 119. Comparison of size-distribution measurements on finely ground gold ore with the sedimentation balance and the Haultain Infrasizer.

Bond found when using water as the dispersion medium that less material settled on the sedimentation pan and more on the bottom of the jar than could be accounted for by calculation; also that material that settled to the bottom of the jar outside the edges of the pan was finer than material on the pan, and that this discrepancy became more marked as the fineness of the sample increased. Reproducibility was improved by using a 0.25% sodium chloride solution. Errors arising from eddy currents are reduced by swinging the sedimentation jar through a 90° arc. Currents produced by temperature differences and by air bubbles precipitated during the run are reduced by bringing jar and contents to room temperature.

ACCURACY of the method is difficult to estimate. It is claimed that sedimentation-balance results are in fair agreement with turbidimetric results. A comparison of a size-distribution curve determined by the sedimentation balance with one determined by the Infrasizer is shown in Fig. 119.

Calculation. Bond's method of computing the distribution curve differs from the method previously presented. Denoting weight in mg. of sediment on the pan by W and the settling time by t, a plot of t as. t/W is made, and a straight line is drawn through the points. The intercept of this line on the

$^a/W$-axis is denoted by y. The commonly observed upward curvature in the finer sizes is ascribed to mutual repulsion of the particles, and is avoided by using data in the 150- to 600-sec. range for determination of the straight line. The time required for a sphere of density G_s and size number 36 (see Sec. 4, Art. 17) to settle 11 cm. in a liquid of density G_l and viscosity b is calculated from Stokes' law thrown into the form

$$t_{36} = \frac{115{,}500b}{G_s - G_l} \tag{55}$$

It follows that $t_{37} = 1/2t_{36}$, $t_{38} = 1/4t_{36}$, $t_{35} = 2t_{36}$, etc. The percentage of weight, W_n, retained on size number n, and passing $n + 1$ can be computed from the equation

$$W_n = \frac{300t_n'^2 y}{(t_n' + y)(t_n' + 2y)(t_n' + 4y)} \tag{56}$$

where $t_n' = \frac{t_n}{1{,}000}$.

Example. Material was a sample of tube mill product from LAKE SHORE GOLD MINES. $G_s = 2.78$, $V_f = 0.6830$, temperature = 22.6° C., $b = 0.00947$ poise. $W_s = (2{,}000 \times 2.78)/(0.683 \times 1.78) = 4{,}572$ mg. $t_{36} = (115{,}500 \times 0.00947)/1.78 = 614.4$ sec. $t_{36}' = t_{36}/1{,}000 = 0.614$. $y = 0.0900$ (determined by plotting sedimentation results).

Table 38. Computation by Eq. 56

n	t_n	$300t_n^2 y$	$t_n' + y$	$t_n' + 2y$	$t_n' + 4y$	$(t_n' + y) \times (t_n' + 2y) \times (t_n' + 4y)$	W_n, %
41	.....	.....	.....	.....	.....	.....	0
40	0.0384	0.03972	0.1284	0.2184	0.3984	0.01118	3.55
39	0.0768	0.1589	0.1668	0.2568	0.4368	0.01871	8.55
38	0.1535	0.6356	0.2435	0.3335	0.5135	0.0417	15.23 *b*
37	0.307	2.5425	0.397	0.487	0.667	0.129	19.71
36	0.614	10.17	0.704	0.794	0.974	0.544	18.70
<36	.....	.....	.....	.....	.....	.....	34.26 *a*

a Obtain by difference.

b $W_{38} = \frac{0.6356}{0.2435 \times 0.3335 \times 0.5135} = \frac{0.6356}{0.0417} = 15.23\%$.

Improved sedimentation balance, wherein a closer control of temperature, and automatic devices for the addition of weights and recording of time are introduced, are described by Oden (*17 Trans. Far. Soc. 327*) and Johnson (*16 Soil Science 365*).

Centrifuge method of determining side distribution is nothing more than a sedimentation method wherein the gravitational force is replaced by a centrifugal force. Such replacement enables the operator to vary at will the magnitude of the force producing settling and thus control the time required for testing. Centrifuging as presently practiced may be divided into two types according to whether the material under test is of suspensoid or colloidal size. This division is somewhat arbitrary but represents practice. SUSPENSOIDS have an upper limit of approximately 30-μ and a lower limit of 0.1-μ; COLLOIDS range from 0.1-μ down to giant-molecular dimensions. Centrifuging colloids is beyond the scope of this book; for its theory and practice see Svedberg (*Colloid Chemistry*, Reinhold Publ. Co., 1928). When a suspensoid is settled by centrifuging, the material settled in time t may be divided into two parts: (1) material with an equivalent diameter (Art. 18) equal to or greater than D, and (2) material which was settled even though its equivalent diameter was less than D (this is material that was originally near the bottom of the sedimentation tube). The equivalent diameter D may be calculated from Stokes' equation by replacing g by $(2\pi N/60)^2 l$ where N = r.p.m., and l = distance of particle from center of rotation, *i.e.*,

$$v_c = \frac{G_s - G_l}{18b} D^2 l \left(\frac{2\pi N}{60}\right)^2 \tag{57}$$

where v_c = centrifugal sedimentation velocity. Romwalter and Vendl (*78 KZ 1*) applied Oden's method (p. 121) and derived the following equation

$$\int_0^D U\, dD = \frac{1}{4.6 \log r/r'} \frac{r^2 - r'^2}{r'^2} t \frac{dw}{dt} \tag{58}$$

where $U = \frac{df}{dD}$ (see p. 121), r = distance from axis of rotation to bottom of centrifuge

tube, r' = distance from axis of rotation to the meniscus of the suspension, and w = weight of material sedimented in time t. Solving Eq. 57 for D gives

$$D = \frac{6}{\left(\frac{2\pi N}{60}\right)} \left(\frac{b \ln r/r'}{2(G_s - G_l)t}\right)^{1/2} \quad (59)$$

Procedure. Martin (*11 IECA 471*) used a centrifuge free of vibration and housed in a constant-temperature room, run at 1,300 r.p.m., and having tubes which were 15(diam.)×35-mm. flat-bottom vials. A tube was filled with suspension, weighed, then centrifuged for t min., after which it was removed to a special holder and all of the liquid above 2 mm. from the bottom was drawn off by means of a capillary pipette. The withdrawn liquid was analyzed for suspended solids, chemically or otherwise. The vial sediment was dried, weighed, and the percentage settled in time t calculated.

Accuracy of the method, as checked by microscopic determinations of size, appears to be fairly good. Table 39 compares results with centrifuge and microscope. The average particle sizes, 1.6-μ for the former and 1.92-μ for the latter, compare fairly in light of the approximations in calculation. Martin cites REPRODUCIBILITY of the order of magnitude of ±5% (see Fig. 120). Attainment of such accuracy and reproducibility presupposes proper dispersion of the powder in the sedimentation liquid. TIME required for testing depends upon the number of points determined on the sedimentation curve; 2 to 3 days appears to be average for a relatively complete test.

Table 39. Centrifugal *vs.* microscopic determination of average size (*after Martin*) *a*

Diameter, microns	Centrifuge, % weight	Microscope, number of particles
>3.0	5	2
3.0 to 2.0	9	40
2.0 to 1.0	66	260
<1.0	20	1,000
Average	1.6	1.9

a Titanium dioxide dispersed in glycerol.

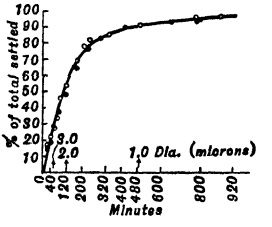

FIG. 120. Reproducibility in centrifuge sizing.

17. SURFACE MEASUREMENT

In the case of many industrial minerals, requirements as to fineness are measured more satisfactorily by estimates of particle surface per unit of weight (SPECIFIC SURFACE) than by measures of particle size. This is particularly true when after-use of the material involves chemical reaction. Hence in such industries surface measurement substitutes more or less completely for particle-size measurement as a tool of control. Even where particle size is of interest, cases arise in which estimation thereof from surface measurement is more rapid, or more readily effected than direct size estimation.

Turbidimetry

Turbidity of a suspension is directly related to the specific surface and may be used as an indirect measure of particle-size distribution. TURBIDITY is defined as the logarithmic ratio of the intensity I_0 of the light transmitted by a given thickness of clear suspending medium to the intensity I of the light transmitted by the same (constant) source, through an equal thickness of suspension, *i.e.*, turbidity = $\log (I_0/I) = \log I_0 - \log I$. Turbidity is proportional to the concentration and to the specific surface of the powder. This relationship fails unless particles are completely opaque and are larger than about 3-μ; finer particles produce diffraction effects which follow a different law. The rapidity of the method, average 30 to 45 min. for determination and calculation, recommends it. It is standard procedure in control of clinker grinding in cement manufacture.

Wagner turbidimeter (*33 ASTM 553*) is shown in Fig. 121. Light source *a* is a 6-cp. lamp on a 6-v. storage battery with rheostat control; it is mounted in a parabolic reflector to produce a substantially parallel beam passing through a water cooling cell *b*, a rectangular slit in an opaque shield *c*, a sedimentation tank *d*, another shield with rectangular slit, and thence through a filter to a photoelectric cell *e* (Weston Photronic), all enclosed in a substantially lightproof cabinet *f*, about 6×12×18-in. Current generated by the cell is measured by a low-resistance microammeter. The light source, cooling cell, slit and photo-cell are mounted on a movable shelf *g* which is raised and lowered as

indicated by handle *h*. An opening is cut out of the bottom of *f* to isolate the sedimentation tank, which is mounted on an independent base *i*, to reduce vibration of the tank when shelf *g* is moved. A pointer *j* attached to the shelf indicates the position of the light assembly against a scale *k* on the outside of the cabinet.

Calibration. Adjust light intensity I_0 to 100 microamperes as follows: A suspension containing 0.5 gm. of a powder is placed in the tank and the microammeter read at some time after agitation ceases (usually 1 min. for the 30- to 60-μ level). A second suspension containing 1.0 gm. of the same powder is placed in the tank and a reading taken at the same level after the same interval of time has elapsed. These two readings are plotted directly as ordinates on semilogarithmic paper (logarithmic scale on intensity) against the weight of the sample, and a straight line is drawn through them. The intercept of the line with the zero weight ordinate is I_0. If the value obtained is other than 100 microamperes, the rheostat setting of the lamp is changed and I_0 redetermined. When the lamp is properly adjusted the filter is placed in the light path, the tank is removed, and a reading is taken. This permanent reference value is $I_0 \times f$, where f = filter factor.

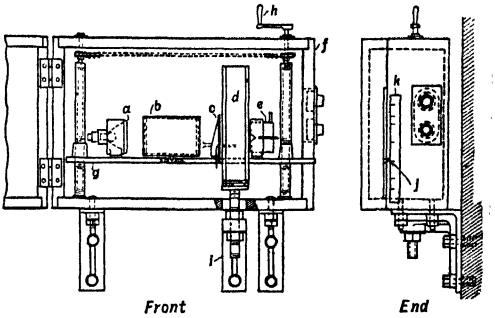

FIG. 121. Wagner turbidimeter.

Time intervals at which readings are taken may be obtained either by calculation (Eq. 60) or by use of a timing burette, which consists of a glass tube (38 ± 4 cm. long and 1.9 ± 0.2 cm. diameter) having a capillary tube (17.5 ± 2.5 cm. long, 0.09 ± 0.005 cm. diameter) fused into the lower end, the upper end being flared to serve as a funnel.

Calibration of timing burette. (1) Calculate times of flow from the burette corresponding to the settling times for the different sized particles using Stokes' law in the form

$$t = \frac{1{,}837{,}000hb}{(d_s - d_l)D^2} \qquad (60)$$

where t = settling time, sec.; h = depth from top of suspension to level of light, cm.; b = viscosity of suspending liquid, poises; d_s = density of solid, gm. per cc.; d_l = density of liquid; D = particle diameter, μ. (The diameter of an irregularly shaped particle is taken as the diameter, calculated from Stokes' law, of a sphere of the same density and falling velocity as the particle.) (2) Fill burette with suspension fluid; viscosity and density at calibration temperature are known. (3) Start timing clock at instant fluid drains past zero line. (4) Note levels reached by draining fluid at times calculated from Eq. 60 and mark burette scale with the corresponding diameters. Since rate of flow through burette varies with changes in viscosity and density of fluid in the same manner as the settling time, the timing burette automatically corrects the settling times (or times of flow) for small changes in temperature, viscosity and fluid density.

In use, the burette is filled with suspension fluid and sedimentation is allowed to start when fluid in burette drains past zero line. Turbidimeter readings are taken when draining fluid passes the calibration marks corresponding to diameters 60, 55, etc.

Operation. A 0.3- to 0.5-gm. sample is dispersed in the suspending liquid, using a dispersing agent, if necessary, and is placed in the sedimentation tank with enough additional liquid to bring volume to the mark. Tank windows are wiped clean. With the filter in place adjust light intensity to a proper value ($I_0 \times f$) (for calibration see above) by taking readings at 1-min. intervals until lamp and photocell are in equilibrium, as is indicated by constancy of readings. Place pointer *j* at the 30–60-μ mark. Oscillate the sedimentation tank, place it in position, and record time. Remove the filter and take readings at times t_{60}, t_{55}, t_{50} . . . t_{30} corresponding to diameters 60-, 55-, 50-, 45-, 40-, 35-, and 30-μ as calculated for the material and instrument. Then raise the shelf to the 25-μ mark and read at times t_{25}, etc., until all sizes are covered.

At end of test, the value of $I_0 \times f$ should be redetermined, and should agree within 0.2 microamperes with the value obtained at the beginning.

Basis of method lies in hydrodynamics and optics. When a beam of light is incident upon a suspension of opaque particles its intensity is reduced, because of nontransmittancy of the opaque bodies. But, since the particles are not BLACK BODIES (*i.e.*, perfect absorbers of light) reflection occurs in an amount and direction depending upon their reflectivity, the illuminated surface area, and their surface configuration. This reflected light falls on the shadowed side of other suspended particles and thereby undergoes further reflection. As a result, a suspension transmits light in all possible directions, but with differing intensities. Intensity in any direction depends upon the surface area and number of particles. In the Wagner turbidimeter intensity in the direction of the original beam is measured; in the various forms of the Tyndallometer (see p. 129) the intensity of the light scattered at right angles to the original beam is measured. There is further loss in intensity owing to absorption by the suspending medium.

If the dilution of the suspension is such as to permit free settling, and if the size of the particles (<80-μ) is such that settling takes place according to Stokes' law, then after a time interval t all particles larger

Table 40. Turbidimetric calculations on a cement sample

Particle size, μ	I microamperes	Log I
60	11.0	1.041
55	11.1	1.045
50	11.3	1.053
45	11.5	1.061
40	11.7	1.068
35	12.1	1.083
30	12.6	1.100
25	13.4	1.127
20	14.4	1.158
15	15.7	1.196
10	19.1	1.281
7.5	23.0	1.362
		13.575
-0.25×1.362		.341
		13.234
$+$ 1.500		1.500
		14.734
-12.5×1.041		13.013
		1.721

than a diameter D will have fallen below the level h of the slit delineating the light beam, and the change in intensity of the transmitted light will be due to the removal of these larger particles. Particles smaller than D that fall out of the light path are replaced by particles of like size from the upper layers, hence do not affect the intensity. Hence microammeter readings taken at times t_1, t_2, t_3, . . . afford a measure of surface area of the particles in the original suspension smaller than the corresponding diameters D_1, D_2, D_3, . . ., as calculated from Stokes' law.

Surface area of all particles smaller than D is directly proportional to the turbidity, and is given by the empirical equation

$$A_S = c(\log I_0 - \log I_D) \tag{61}$$

where A_S = surface area, in sq. cm., of all particles smaller than D diameter, I_0 = intensity of light, in microamperes, transmitted by clear liquid; I_D = intensity of light transmitted by suspension after the time interval required for a particle D diameter to settle from the surface of the suspension to the center line of the light beam has elapsed; c = the transmittancy constant. The use of microamperes as a measure of intensity is justified by the direct proportionality existing between intensity of light and the current generated by the photo-cell; for photo-cells not exhibiting linear characteristics in the useful range this use is not justified. The transmittancy constant c depends upon reflectivity, transparency, shape, and size of particles and is assumed independent of size; the assumption is untenable when particle size is less than 2- or 3-μ.

Transmittancy is evaluated by equation

$$c = \frac{1.2 \times 10^4 \times \frac{W_{60}}{G_s}}{1.5 + 0.75 \log I_{7.5} + \log I_{10} + \log I_{15} + \cdots \log I_{55} - 11.5 \log I_{60}} \tag{62}$$

where W_{60} = weight in grams of <325-m. material in sample. Neglect surface area of >60-μ particles.

Specific surface S_0 of the powder is given by

$$S_0 = \frac{1.2 \times 10^2 \times \frac{q}{G_s} \times (2 - \log I_{60})}{1.5 + 0.75 \log I_{7.5} + \log I_{10} + \cdots \log I_{55} - 11.5 \log I_{60}} \tag{63}$$

where q = % <325-m. Particles larger than 60-μ are relatively few in turbidimeter feeds and have relatively small surface area per unit weight, hence produce insignificant changes in microammeter readings and may be neglected.

Weight of a fraction is given by

$$W_{D_1 \sim D} = \frac{G_s}{6} \times 10^{-4} \times \left(\frac{D + D_1}{2}\right) \times c \times (\log I_D - \log I_{D_1}) \tag{64}$$

Table 41. Comparison between turbidimetric, microscopic, and air-elutriation determinations

Micron range	Percentages				
	Average of 2 microscope counts		Average of 8 turbidimetric tests		Roller air elutriation
0~5	1.0		0.6		1.6
5~10	5.9		4.3		4.0
10~20	15.9		19.0		16.6
20~30	16.4	35.5	17.8	35.3	34.4
30~40	19.1		17.5		
40~50	20.2	41.7	20.3	40.7	43.4
>50	21.5		20.4		

Calculations are facilitated by the use of equal particle-diameter intervals. Maximum particle diameter used is a matter of experience; it should be such that the microammeter

reading for the next coarser size differs by less than 0.1 microampere from the reading for D_{max}. For turbidimetric work on copper powders, the METALS DISINTEGRATING Co. uses a $D_{max} = 50\text{-}\mu$, and determines diameter and falling velocity of difficult grains separately.

Example of turbidimetric calculation on 1-gm. sample of cement, 89.7% <325-m. sp. gr., 3.15. *f*, 20.5 before and after. Turbidimetric sample 0.3 gm. Readings, see Table 40. TRANSMITTANCY *c* from Eq. 62, 1,985; specific surface from Eq. 63, 1,900 sq. cm. per gm.

Reproducibility of the method, as measured by the per cent. average deviation, is of the order of 6 to 7%. Comparison of turbidimetric results with those obtained by microscopic count and by air elutriation is given in Table 41.

Table 42. Relation between screen and turbidimetric measurements for cement

Mesh size, % passing		Surface area sq. cm. per gm.
200	325	
70 to 75	60 to 70	1,000
80 to 85	65 to 75	1,200
90 to 95	87 to 90	1,400
93 to 97	90 to 93	1,600
97 to 99	93 to 96	1,800
99 to 99.7	96 to 98	2,000
All.....	98 to 99	2,300
All.....	99.5 to 99.8	2,600

Screen equivalents of turbidimetric measurements of cement are given in Table 42.

Tyndallometry

Tyndallometer has been suggested by a number of investigators as a tool for surface and size measurement. The method is based upon the fact that light incident upon a particle small compared to the wave length is reflection-scattered in all directions, and is polarized to an extent which depends upon the angle the scattered light makes with the incident beam, being completely plane polarized in the 90° position. As particle size increases polarization decreases and finally vanishes when the particles are large compared to the wave length. Attempts to utilize this phenomenon for size measurement have not proved particularly successful (Stutz, *210 JFI 67*), but Gamble and Barnett (*9 IECA 310*) have adapted and improved an apparatus suggested by Pfund (*24 J. Opt. Soc. Amer. 143*) for determining scattering in the near infrared, and report differentiation between samples of zinc oxide that appear microscopically to have the same size.

Surface-reaction Methods

Under this heading are grouped methods depending upon established surface reactions of chemical-solution and metathetic types, so-called adsorption methods, and methods involving measurement of the heat of wetting. All, beyond possibility for argument, involve extension of the reaction field along cracks into the interior of the solid, and none can, therefore, pretend to a measurement of superficial surface upon which to found an estimate of particle size or other function of superficial surface. They may, on the other hand, give a useful basis for estimates of surface-chemical activity.

Dissolution

Dissolution methods of surface measurement are based on Wenzel's law that rate of reaction between solids and liquids is proportional to the area of contact. The rate of reaction decreases with time, since reaction is accompanied by a decrease in concentration of solvent, a decrease in surface area, and an increase in concentration of reaction products. Consequently the dissolution rate must be determined for zero time, when no change in liquid or solid has taken place. This is possible only by extrapolation of the rate curve to zero time. The method with any given solvent is applicable to a single solid only, since it is usually impossible to find a solvent having equal dissolution rates for different solids or, therefore, for the components of a mixture of solids.

Success in use is dependent upon proper choice of solvent. Conditions limiting such choice are: (*a*) The diffusion rate must exceed the dissolution rate, or the rate measured will be the diffusion rate. (*b*) The reaction product should not be gaseous, because mechanical difficulties are then introduced. (*c*) The rate curve should be reasonably flat to assure accuracy in extrapolation. Curves of excessive curvature result when the reaction is autocatalytic, when the equilibrium point is reached or approached in the time required for dissolution, when the reaction products protect the surface from further attack by the solvent, when the solvent concentration is improper, i.e., when the change in dissolution rate diminishes too rapidly, as may occur when concentration of solvent is too low, or when the solvent dissolves too large or too small a quantity of solid.

Wolf (*35 Ztschr. angew. Chem. 138*) has used a mixture of sodium carbonate and sodium hydroxide as the solvent for powdered glass; Kraige (*24 RP 65*) used hydrochloric acid for calcite and limestone; Martin (*25 CerS 51*) and Gross (*Bul 402 USBM*) have used hydrofluoric acid for quartz.

Procedure perfected by Gross is as follows: Hydrofluoric acid (3.66 *N*) is placed in a Bakelite tube stoppered at both ends and is brought to a temperature of about 23° C. An accurately weighed sample of quartz is introduced into the tube and tube and contents are placed in a constant-temperature bath, the tube being revolved to stir. Just before the allotted time of the test has elapsed, the tube is removed and its contents are rapidly filtered and washed. Dissolution time is that elapsed between introduction of solid into the tube and application of wash water. Tests are made for 1/2-, 1-, 1 1/2-, and 2-hr. periods on different samples cut out from a lot. The filtered quartz is ignited and weighed and the quantity dissolved computed by difference. Results of a test are shown in Fig. 122. Rate and cumulative curves may be combined empirically to produce a straight line, thus

$$KQ + R = R_0 + kt \qquad (65)$$

where K and k = constants, Q = cumulative % dissolved, R = % dissolved per hr., R_0 = initial rate, and t = time, in hr. of test. The relation holds for dissolution times up to 9 hr. for quartz ranging

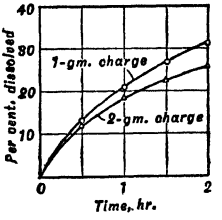

FIG. 122. Results of dissolution tests on quartz.

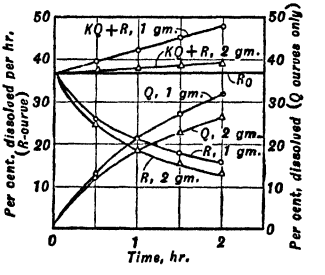

FIG. 123. Extrapolation for initial rate.

from 3-m. to 1-μ. Values of the unknowns K, R_0, and k may be determined from three sets of values for Q, R, and t; the fourth set may be used as a check. Checking is done by means of the following equations derived from Eq. 65:

$$R = \frac{R_0 + kt}{1 + Kt}; \quad Q = \frac{R_0 t + kt^2}{1 + Kt}$$

Fig. 123 shows the $(KQ + R)$ lines extrapolated to zero time, giving initial rate.

Initial rate in hydrofluoric acid leaching of quartz was attempted to be related to surface area by comparing the weight of a silver coating of crushed quartz with that on quartz crystals of known area. Accuracy of the silver-coating method of comparing surface areas is not high, hence the absolute surface areas determined by the dissolution method are not particularly accurate; comparisons of initial rates are probably more accurate. REPRODUCIBILITY is excellent, duplicate runs agreeing within 0.1%.

Adsorption

Adsorption methods of surface measurement may be divided into two classes according as the adsorption takes place in a gas or in solution. In both cases experimental procedure is directed toward determination of the quantity of material adsorbed. On the assumption that the adsorbed material forms a closely packed monomolecular layer over the surface of the powder, and from a knowledge of the molecular dimensions and orientation of the molecule, the so-called absolute specific surface may be calculated. The validity of the method as an absolute one is questionable; as a relative method it stands on firmer ground.

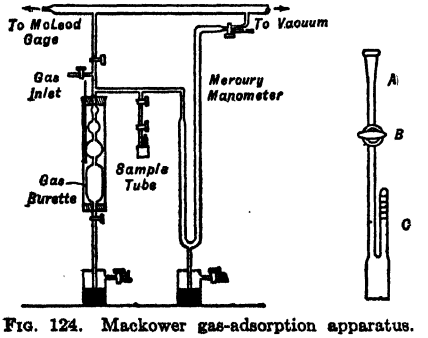

FIG. 124. Mackower gas-adsorption apparatus.

Gas adsorption methods have been described by Emmett *et al.* (*59 ACS 310, 45 Soil Science 57*) and Mackower (*2 Proc. Soil Sci. Soc. Amer. 101*).

Mackower's apparatus, which is a modification of the Emmett apparatus, is shown in Fig. 124.

Procedure. A sample, sufficient to give a surface area in excess of 10,000 sq. cm., is placed in the sample tube, which is then evacuated to remove moisture and other adsorbed vaporizable materials; evacuation is continued until pressure is less than 10^{-5} mm. of mercury. This may take as long as 4 days. The sample bottle is then placed in a liquid-nitrogen bath and the free space within the sample bottle is determined by displacement with helium, from which the density of the material may be calculated, knowing the weight of helium introduced and the volume and temperature prevailing. Helium

is removed by pumping and nitrogen is admitted while the sample bottle is still in the liquid-nitrogen bath. After equilibrium is attained, as indicated by constant pressure for a constant temperature, the temperature and volume of gas remaining in the free space are determined, from which the amount of adsorbed nitrogen may be calculated. Readings at higher pressures may be taken by forcing mercury into the gas burette. A plot of pressure against volume of nitrogen adsorbed is shown in Fig. 125; the resulting curves are typical van der Waals isotherms. If the linear portion (at low pressures) of the curve is extrapolated, the volume-axis intercept gives the volume of gas required to form a monomolecular layer of gas on the surface, with an error of about 15%. To correct for this error Emmett suggested using a corrected intercept point and devised the following method of plotting for obtaining it. The apparatus and procedure for this method are complicated and should not be attempted without reference to the original literature cited.

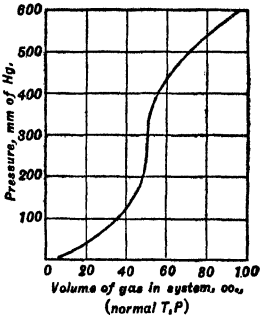

FIG. 125. Typical adsorption curve for Mackower apparatus.

Calculations. Relation between the various quantities is given by

$$\frac{p}{V(P_0 - P)} = \frac{1}{V_m K} + \frac{K-1}{V_m K} \cdot \frac{p}{p_0} \qquad (66)$$

where V = volume of gas adsorbed at pressure P and at a temperature at which the vapor pressure of the liquefied gas is P_0, V_m = volume of gas, in cc., required to form a monolayer, and K = constant related exponentially to the difference between the heat of liquefaction of the adsorbate and its heat of adsorption. If the data for the low-pressure end of the isotherm are plotted with $P/V(P_0 - P)$ as ordinates and P/P_0 as abscissae, a straight line results, the intercept of which is $1/V_m K$ and the slope $(K-1)/V_m K$. Solution of these simultaneous equations gives values for V_m and K. From this volume at normal temperature and pressure the number of molecules can be calculated, using Avogadro's number. The cross-sectional area of a molecule can be calculated from its diameter (13.8 Å for N was obtained by Gaudin and Bowdish (*A TP 1666*) by comparison with glass spheres of known surface), hence the product of this area and the number of molecules contained in the adsorbed volume of gas gives the projected area covered by the gas. This area multiplied by a factor which makes allowance for the void space in the type of planar packing that is assumed gives the area of the powder.

Determinations for a number of fine powders by this method compared with determinations by other methods are given in Table 43. Other gases have been used, *viz.*, O, A, CO, CO_2, and SO_2, and other solids, *e.g.*, iron synthetic-ammonia catalysts, metallic-copper catalysts, pumice, nickel-oxide catalyst on pumice, nickel on pumice, hydrated and anhydrous copper sulphate, potassium chloride, crystalline chromium oxide, chromium-oxide gel, Glaucosil, silica gel, and soils. Charcoal does not yield an S-curve.

Liquid adsorption methods abound in the literature. A typical method is described by Harkins and Gans (*53 ACS 2804*). A sample of titanic oxide powder was dried in a high vacuum at high temperature. Thereafter the cool, dry powder was immersed in a solution of oleic acid in dry benzene (see Fig. 126 for concentrations) and the suspension shaken until equilibrium was reached, which was determined by permitting the powder to settle, withdrawing a sample of supernatant liquid, analyzing for oleic acid, and repeating until the analyses for successive withdrawals duplicated. Fig. 126 shows results. Harkins interpreted the linear portion of the curve to indicate the formation of a condensed oleic-acid film upon the surface of the powder. On the basis of the facts presented, and in view of the overwhelming evidence to the contrary, this conclusion is untenable; actually a surface reaction has occurred (see Sec. 12, Art. 3). Using a figure of 20.0 sq. Å as the cross-sectional area of the molecule (obtained from air-liquid interface work) areas of 22.9 sq. m. per cc. (3.89 gm.) for sample I, and 14.4 sq. m. per cc. for a different sample, II, were calculated. The ratio of these values is 1.59. When propyl alcohol was adsorbed, the ratio of the calculated areas for these samples was 1.53. The ratio of areas from heat of wetting (see p. 133) was 1.53. The area of sample II calculated from microscopic determination was 13.8 sq. m. per cc.

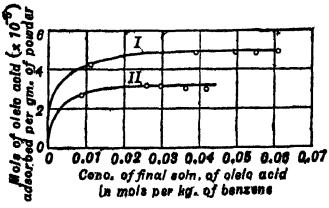

FIG. 126. Adsorption of oleate ion from benzene onto titanic oxide (*after Harkins and Gans*).

Other liquid-adsorption methods are described by Askey and Feachem (*57 SCI 272*), *Paneth*, and *Hahn*.

Radioactive tracer method (see p. 94) is based on: (*a*) kinetic exchange between ions of the crystal lattice and a radioactive ion in solution, capable of isomorphous crystal formation with the oppositely charged ion of the lattice; (*b*) surface coverage by radioactive ions from solution; or (*c*) surface

Table 43. Comparison of surface and particle-diameter measurements by adsorption and other methods

(after Emmett and De Witt, 13 IECA 28, and Mackower, 2 Proc. Soil Sci. Soc. Amer. 101)

Material	Sample weight, gm.	V_m, cc., by adsorption		Surface area, sq. meters per gm.					Diameter of particle, micron *d*				
									Adsorption		Direct	Particle count *e*	
		N	C_4H_{10}	*N*	C_4H_{10}	Salicylic acid	Methyl stearate	Microscope	*N*	Methyl stearate	Microscope	Microscope	Ultramicroscope
Carbon Blacks:													
Micronex	3.08	75.2	.....	106.7	.....	.....	.....	.....	0.031	.....	.....	.....	0.061
P-33	2.82	14.4	.....	22.12	.....	.....	.....	.....	0.151	.....	.....	.....	0.159
Arrow black	3.29	84.8	.....	112.7	.....	.....	.....	.....	0.029	.....	.....	.....	.....
Wyex	2.95	74.2	.....	110.2	.....	.....	.....	.....	0.030	.....	.....	.....	.....
Thermax	4.44	7.8	.....	7.69	.....	.....	.....	.....	0.43	.....	.....	.....	.....
Thermatomic	5.50	8.5	.....	6.81	.....	.....	.....	.....	0.49	.....	.....	.....	1.12
Acetylene black	0.79	11.7	.....	64.5	.....	.....	.....	.....	0.052	.....	.....	.....	0.130
Zinc-Oxide Pigment:													
F-1601	5.49	11.89	.....	9.48	.....	.....	5.54	3.87	0.115	0.19	0.28	0.21	0.135
F-1602	6.44	12.95	.....	8.80	.....	.....	4.56	3.27	0.124	0.24	0.34	0.25	0.16
G-1603	7.40	6.56	.....	3.88	.....	.....	1.97	1.37	0.280	0.55	0.79	0.49	0.26
KH-1604	17.17	2.58	.....	0.66	.....	.....	0.24	0.58	1.680	4.50	1.86	1.40	0.82
Lithopones:													
Unground and uncalcined	12.59	100 *a*	.....	34.8	.....	.....	.....	.....	.....	.....	.....	.....	.....
Calcined and unground	8.32	2.6 *a*	.....	1.37	.....	.....	.....	.....	.....	.....	.....	.....	.....
Calcined and ground	6.24	4.9 *a*	.....	3.43	.....	.....	.....	.....	.....	.....	.....	.....	.....
Standard cement	12.46	3.87	.....	1.08 *b*	.....	.....	.....	.....	.....	.....	.....	.....	.....
Graphite	5.45	38.22	.....	30.73	.....	3.96	.....	.....	.....	.....	.....	.....	.....
TiO_2	6.60	14.91	5.00	9.88	6.58	5.55	.....	.....	.....	.....	.....	.....	.....
$ZrSiO_4$	17.52	11.05	.....	2.76	.....	1.33	.....	.....	.....	.....	.....	.....	.....
$BaSO_4$	14.86	14.60	4.60	4.30	2.68	1.73	*c*	.....	.....	.....	.....	.....	.....

a Lower inflection point on the isotherm.

b Compare with value of 0.1890 sq. meter per gm. designated by USBS for calibrating Wagner turbidimeter (see Art. 17).

c Radioactive indicator method gave 2.2 sq. meters per gm.

d Related to surface, *S*, by $S = 6/\rho D$, where ρ = density of zinc oxide particles = 5.6.

e Diameter *D* related to number of particles *N* by relation $N = 1/\rho D^3$.

coverage by radioactive molecules from solution. Exchange of lead ions between a saturated solution of radioactive lead sulphate (from thorium B) and a powder of ordinary lead sulphate, was used by *Paneth* to determine the surface area of the latter. Surface was also calculated from microscopic determinations of average height and width of the lead sulphate crystals; the difference between the results of the two methods ranged from 2 to 58% for eight different powders. With lead chromate powders of more perfect crystalline form, on which microscopic determination of surface is more readily and accurately made, the discrepancy between the results of the microscopic and radioactive methods was less than 10%; with strontium sulphate (isomorphous with lead sulphate) powders of almost perfect crystals the difference vanished. The kinetic exchange method is usually applicable to artificial minerals, and such natural minerals as exhibit a mosaic structure, *e.g.*, natural minerals such as crocoite, wulfenite, cerussite, etc., which are composed of smaller crystals oriented at random; natural minerals which exhibit a high degree of regularity (*e.g.*, galena, anglesite, barite, selenite, etc.) do not give a measurable exchange.

Heat of wetting as a method of surface measurement has been suggested by a number of investigators. The method attempts to measure the energy changes associated with the purely physical process involved in the formation of a solid-liquid interface; the heat of wetting being a function primarily of the interfacial area and tension. Unfortunately, energy changes associated with chemical surface reactions and dependent upon the previous history of the material interfere with the determination. In addition, and apart from any chemical activity, the interfacial tension is affected in some unknown way by the age of the solid surface, consequently surface determinations by this method cannot be considered reliable.

Permeability

Permeability methods give a direct measure of specific surface and an indirect determination of average size. If a fluid, usually air or water, is percolated through a porous medium of uniform cross-sectional area A sq. cm. and thickness l (cm.), the rate of flow is given by Darcy's law

$$v = Q/A = KP/bl \tag{67}$$

where v = rate of flow in cm. per sec., Q = volume of fluid flow through the bed in cc. per sec., P = the pressure difference driving the percolation fluid, in gm. per sq. cm., b = viscosity of fluid in poises, and K = a proportionality constant called the PERMEABILITY of the porous medium. K is a specific property of the porous bed, which is independent of the bed dimensions, of the driving pressure, and of the viscosity of the fluid. The permeability is calculable on theoretical grounds (Kozeny, *22 Wasserkr. u. Wasserwirts. 67, 86*) for a bed of rigid grains according to the expression

$$K = \frac{gB^3}{5S_0^2(1-B)^2} \tag{68}$$

where g = acceleration due to gravity in cm. per sec. per sec., S_0 = specific surface in sq. cm. per gm., B = porosity or fractional void space in the bed.

Validity of Eq. 68 has been demonstrated experimentally by Carman (*15 ICE 150; 57 SCI 225 T*). Solving Eq. 68 for specific surface

$$S_0 = \sqrt{\frac{gB^3}{5K(1-B)^2}} = 14\sqrt{\frac{1}{K}\cdot\frac{B^3}{(1-B)^2}} \tag{69}$$

Carman tested this equation, using particles of known geometric shape, for a wide variety of materials with porosities ranging from 0.26 to 0.90. The geometrical specific surface was in good agreement with the specific surface calculated from Eq. 68, independently of variations in porosity. When mixtures in known proportions of particles of known and varying specific surface were tested, the predicted specific surface was in agreement with that calculated from the permeability.

Carman fluid percolator (*39 JCM 266*) consists of a permeability tube *a* (Fig. 127) of accurately known uniform cross-sectional area A sq. cm., 1.8- to 2-mm. diameter and 5 to 10 times this length, connected by means of a ground glass joint *b* and bent tube *c*, containing a stopcock *i*, to the collecting bottle *d* and thence by tube *e* with a vacuum receiver equipped with a pressure regulator and manometer. At *f* is located a piece of Monel metal filter cloth supported by a copper spiral spring *g*. The filter cloth carries the sample bed *k*. With fine-grained samples, the filter cloth is precoated with a thin layer, ±0.5-mm., of kieselguhr, colored black with carbon or red with ferric oxide so as to make clear the boundary between granular bed and kieselguhr. The resistance, as measured by pressure drop, of the filter cloth plus kieselguhr should not exceed 1 to 2% of the resistance of the bed. The reservoir *m* for percolating liquid is a volumetric cylinder fitted with a discharge

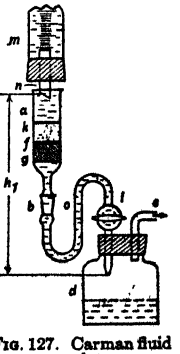

FIG. 127. Carman fluid percolator.

tube n, with beveled bottom, of such diameter that with a slow flow of percolating liquid, air flows upward and liquid downward through n at such a rate as to maintain level h_1 in a as indicated.

Procedure. A sample of known weight is placed in a beaker, is thoroughly wetted by additions of small quantities of percolation liquid preheated to its boiling point, and, stirring with a rod equipped with a rubber policeman, additions are continued until a volume of liquid some 5 to 10 times the volume of the powder has been added. Dispersion of the powder in the liquid must be as complete as possible; it may be aided by addition of suitable dispersing agents (Sec. 12, Art. 8). The dispersed pulp is cooled to room temperature, stirred and washed gently into the percolation tube. If a precoat of kieselguhr is used, this addition must not disturb it; protection may be had by first covering the precoat with a 1-cm. layer of percolation fluid. After addition of the sample, suction is applied and the sample is stirred so as to prevent stratification. Suction is continued until all the powder is drawn into the bed. The bed thickness should be such that vacuum need not exceed 15 or 20 cm. of mercury with organic liquids, or 40 to 50 cm. of mercury with water. The thickness l of the bed is determined by measurement at several points of the circumference. Flow should next be started and suction adjusted to a constant flow rate through n.

Example of measurement and calculation of specific surface of a cement sample. Density of cement $G_s = 3.05$ gm. per cc.; sample weight $W = 4.27$ gm.; depth of bed $L =$ (arithmetic average at four points around periphery) 0.96 cm.; cross-sectional area of permeability tube $A = 2.87$ sq. cm.; viscosity b of liquid (alcohol-acetone mixture) at 18° C. = 0.0046 poise; density of liquid at 18° C., $G_l = 0.792$ gm. per cc.; manometer reading = 10.05 cm. of Hg; head h_1 (see Fig. 127) = 13.0 cm.; resistance of support = <1% (negligible); average volume rate of flow $Q = 0.0255$ cc. per sec.
From these data

$$P = 10.05 \times 13.55 + 13.0 \times 0.792 = 146.5 \text{ gm. per sq. cm.}$$

From Eq. 67 and $Q = Av$,

$$K = \frac{QbL}{PA} = \frac{0.0255 \times 0.0046 \times 0.96}{147 \times 2.87} = 2.66 \times 10^{-7} \text{ cc. per sec. per sec.}$$

$$B = \left(1 - \frac{W}{G_s AL}\right) = \left(1 - \frac{4.27}{3.05 \times 2.87 \times 0.96}\right) = 0.492$$

$$S_0 = 14\sqrt{\frac{(0.492)^3}{2.66 \times 10^{-7}(1 - 0.492)^2}} = 18{,}400 \text{ sq. cm. per cc. (from Eq. 69)}$$

The equivalent particle size, D_A, is the diameter of a spherical particle such that a gram of such particles would have the same surface area as the specific surface of the powder tested, *i.e.*

$$D_A = \frac{6}{S_0} = \frac{6}{18{,}400} = 3.3\text{-}\mu \quad \text{(see Eq. 90)}$$

Table 44. Comparison of percolation and microscopic determinations of specific surface of glass spheres (*after Carman*)

Sample No.	Specific surface, sq. cm. per gm.		Average diameter, μ	
	Percolation	Microscope	Percolation	Microscope
1	2,090	2,070	28.7	29
2	987	950	61	63
3	653	653	92	92

Carman reports as the principal limitation of the method difficulty in obtaining good dispersion of powder in fluid, and sets 1-μ as the probable lower size limit. He also shows that flocculation has less effect upon permeability results than upon results of sedimentation methods. ACCURACY was tested with glass spheres of three different sizes. Each fraction was analyzed microscopically, a count of 1,000 particles being made in each case. Comparison is shown in Table 44.

Specific surface of binary mixtures of powders A and B with specific surfaces S_{0A} and S_{0B}, possess specific surfaces S_0 as given by

$$S_0 = xS_{0A} + (1 - x)S_{0B} \tag{70}$$

where x is the weight fraction of A. Tests with quartz powders verified this law of composition.

Air percolator described by Gooden and Smith (*12 IECA 479*), shown in Fig. 128, consists of a Bunsen valve a (slitted rubber tube) attached to air supply, a screw clamp b for fine adjustment of air flow, a pressure regulator controlled by height of water in standpipe c; a calcium chloride drying tube d, a sample tube e which carries the powder under test supported by a porous plug f made of No. 40 copper wire, a water-filled manometer g, a leveling tube h for adjustment of water level in the manometer, and a U-tube i, one arm of which is filled with compacted fine sand which acts as a resistor. The resistor and manometer constitute a flow meter.

Procedure. A known weight of powder is placed in sample tube e and compacted therein by tapping the tube until the apparent volume remains constant, thus insuring uniform porosity. Tube e is then

inserted in the air line by rubber tubing, and air supply is turned on and adjusted to give gentle bubbling. When the manometer readings become constant, a reading is taken and mean diameter D_m or specific surface S_0 is calculated from equation

$$D_m = \frac{6}{S_0} = \frac{60{,}000}{14}\sqrt{\frac{bCFG_s l^2 W^2}{(VG_s - W)^2(P - F)}} \qquad (71)$$

where b = viscosity of air in poises, C = conductance (*i.e.*, the inverse of flowmeter resistance) in cc. per sec. per unit pressure (gm. per sq. cm.), G_s = density of material in gram per cc., l = length

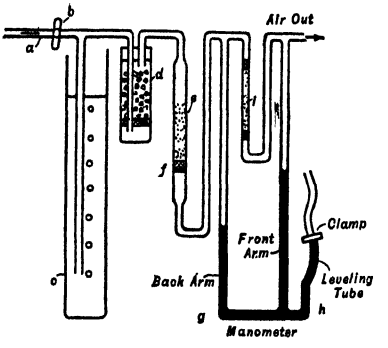

FIG. 128. Air percolator.

Table 45. Air-percolation *vs.* microscopic measurements of diameter *a*

Range, μ	Microscope, diam., μ	Air-permeation method, diam., μ
33 to 97	59	52
27 to 59	43	40
7 to 27	15	14
5 to 12	8	7
3 to 9	5	5
0.3 to 3	1.2	1.9

a Separate fractions of a silica powder.

or height of compacted sample in cm., m = weight of sample in grams, V = apparent volume of compacted bed in cc., P = over-all pressure in grams per sq. cm., and F = pressure difference across flowmeter resistance.

Accuracy was tested by a comparison of the microscopically determined surface-weighted average diameter with the surface-weighted average diameter calculated from the permeability results on separate fractions of powdered quarts (Table 45). Considering the approximations involved in the microscopic determination, agreement was good. Results obtained are reported to be REPRODUCIBLE within 5% in the range of 1- to 50-μ. TIME required for a test ranges from several minutes for free-flowing coarse or fine samples to an hour with some extremely fine samples. The authors describe an automatic calculator which greatly facilitates calculations and reduces testing time.

Coercimetry

The coercimetric method of surface measurement is based upon the existence of a linear relationship between the magnetization coercive force and the specific surface of a magnetic powder (*3268 RI 83*). If either total magnetic induction B or the magnetization density, $4\pi I$, is plotted against the magnetic field intensity, H, there results a characteristic hysteresis loop (Fig. 129). The H-axis intercepts of these curves determine the magnitude of the coercive forces H_{CB} and H_{CI}, which may be defined as the reverse magnetic field intensity required to reduce the total magnetic induction or the magnetization density of a previously magnetically saturated substance to zero; the proper unit of measure of the coercive force is the oersted, though the gauss is sometimes used. The B- or $4\pi I$-intercept of these curves determines the magnitude of the REMANENCE B_r which is defined as the magnetic force retained when the imposed magnetic field vanishes. Since B and $4\pi I$ are both measured in gausses the B- and $4\pi I$-intercepts are equal, as may be seen from the relationship $B = H + 4\pi I$. It should be noted that it is the magnetization-density intercept that is equal to the remanence and not the intensity-of-magnetization intercept, *i.e.*, I-intercept.

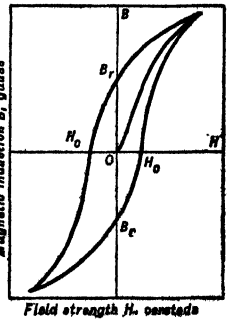

FIG. 129. Characteristic hysteresis loop of a ferromagnetic substance.

Coercimeter (Davis and Hartenheim, *7 RSI 147;* DeVaney and Coghill, *134 A 282*) consists of a long tube A (Fig. 130) of glass or Bakelite on which the primary solenoid B is wound. A secondary coil C is mounted on wheels and runs on a miniature track D, thereby enabling the operator to vary the location of C coaxially relative to B. The leads of the secondary coil with sufficient turns to produce the necessary impulse on the galvanometer available are connected to a high-sensitivity ballistic galvanometer E.

The primary coil B (464 turns No. 18 enameled wire) is connected to the power supply F (a 12-volt storage battery), and a resistor G in series is used to control current. The sample holder H is a brass tube, closed at one end and fitted with a screw top at the other end.

Procedure. Fill sample holder with material under test and compact by tapping. Screw top on tightly enough to hold grains in position, so that they will not move under the action of the magnetic field. Place capsule and contents between the poles of a strong electromagnet, *e.g.*, I, and saturate magnetically. This requires about 5 to 10 sec. After saturation, place the capsule in holder J and insert to the mid-point of the primary coil. Balance the magnetic field of primary against the field of the magnetized specimen by varying the current to the primary until there is no galvanometer deflection when the secondary is suddenly moved. Determine the current to the primary by means of ammeter K (0.1, 1.0, 10-amp.). This reading in amperes multiplied by an instrument constant gives the coercive force H_{CI} in oersteds. The end point may also be determined by taking several galvanometer deflections in each direction, provided they are not too large, and plotting these against the current to the primary; the current intercept of the resulting straight line is the magnitude of the current required to produce a balancing magnetic field in the primary.

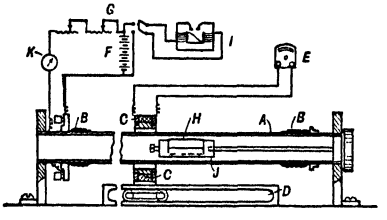

FIG. 130. Coercimeter.

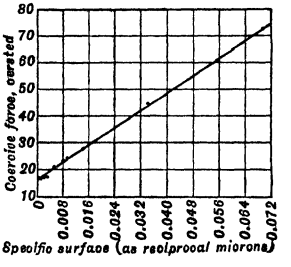

FIG. 131. Coercive force *vs.* specific surface for Mineville magnetite (*after DeVaney and Coghill*).

Linear dependence of coercive force upon surface area is shown in Fig. 131. Specific surface for this curve was calculated on the assumption of a spherical or cubic particle shape and does not represent direct measurement of surface area. Conversion of coercive force of an unknown powder to specific surface is made by determining the value on the specific-surface axis which corresponds to the measured value of the coercive force. This linear relationship is only exhibited by minerals having a zero or very low coercive force. Linearity is unaffected by small changes in packing density but does show a drift for large changes.

Limitations. The method is limited to the more magnetic mineral powders such as magnetite, ilmenite, pyrrhotite, franklinite, copper ferrite, magnesioferrites, and possibly chromite. ACCURACY cannot be evaluated from the existing data; REPRODUCIBILITY appears to be good. TIME required for a determination is about 10 min.

Specific Surface

Specific surface of powders may be calculated from the determined size distribution, if some assumption is made concerning the shape of the particles. The usual assumption is that the particles are spherical, whereupon the calculation proceeds as follows: (1) Calculate the number of spheres required to give the weight of material retained on some screen, assuming that the diameter of the sphere is the arithmetic average of the apertures of the passing and retaining screens. (2) Calculate the surface area of one sphere and multiply by number of spheres calculated in (1). (3) Repeat these calculations for all screen fractions and take the sum.

If the size distribution obeys a known distribution function, the calculation outlined may be shortened by an integration over the size range.

Bond method. For distributions obeying the Gaudin function (Art. 19), Bond (*A TP 1296*) gives the following method. The distribution functions are written in the forms

$$w = Bx^m \tag{72}$$

$$y = 100(x/L)^m \tag{73}$$

where w = % weight retained on screen with aperture x and passing the next larger screen, B = % weight retained on screen of unit aperture, L = aperture of top limiting screen, m = slope of distribution line developed by the log-log plot (see Art. 19), and y = cumulative % weight passing a screen of aperture x.

Take logarithms of both equations and subtract Eq. 72 from Eq. 73, whereupon $\log y - \log w = 2 - m \log L - \log B$. But if r = geometric size-scale ratio, *e.g.*, $\sqrt{2}:1$ for standard Tyler sieves, then, according to Schuhmann (*A TP 1189*),

$$L = \left\{\frac{Br^{-m}}{100(1 - r^{-m})}\right\}^{-1/m} \tag{74}$$

whence

$$Q = \log y - \log w = -\log (r^m - 1) \tag{75}$$

Values of Q for the usual range of values of m are given in Table 46.

Table 46. Units for evaluating crushed or ground products

m	Q	m	Q	m	Q	m	Q	m	Q	m	Q
0	.....	0.38	0.851	0.60	0.636	0.82	0.483	1.04	0.362	1.26	0.262
0.05	1.770	0.39	0.839	0.61	0.629	0.83	0.476	1.05	0.357	1.27	0.258
0.10	1.456	0.40	0.827	0.62	0.620	0.84	0.471	1.06	0.353	1.28	0.254
0.15	1.276	0.41	0.816	0.63	0.612	0.85	0.465	1.07	0.348	1.29	0.249
0.20	1.142	0.42	0.805	0.64	0.604	0.86	0.460	1.08	0.343	1.30	0.245
0.21	1.125	0.43	0.794	0.65	0.597	0.87	0.453	1.09	0.338	1.31	0.241
0.22	1.095	0.44	0.783	0.66	0.590	0.88	0.447	1.10	0.333	1.32	0.237
0.23	1.077	0.45	0.772	0.67	0.582	0.89	0.442	1.11	0.329	1.33	0.233
0.24	1.059	0.46	0.763	0.68	0.575	0.90	0.436	1.12	0.324	1.34	0.228
0.25	1.041	0.47	0.753	0.69	0.569	0.91	0.430	1.13	0.319	1.35	0.224
0.26	1.025	0.48	0.743	0.70	0.560	0.92	0.425	1.14	0.314	1.36	0.220
0.27	1.010	0.49	0.733	0.71	0.554	0.93	0.420	1.15	0.310	1.37	0.216
0.28	0.995	0.50	0.723	0.72	0.547	0.94	0.414	1.16	0.305	1.38	0.212
0.29	0.979	0.51	0.714	0.73	0.541	0.95	0.409	1.17	0.301	1.39	0.208
0.30	0.962	0.52	0.703	0 74	0.534	0.96	0.403	1.18	0.297	1.40	0.205
0.31	0.948	0.53	0.696	0.75	0.528	0.97	0.398	1.19	0.292	1.45	0.185
0.32	0.934	0.54	0.686	0.76	0.520	0.98	0.393	1.20	0.288	1.50	0.166
0.33	0.919	0.55	0.679	0 77	0.515	0.99	0.387	1.21	0.283	2.00	0.000
0.34	0.904	0.56	0.670	0.78	0.508	1.00	0.383	1.22	0.279	.....	.....
0.35	0.889	0.57	0.662	0.79	0.502	1.01	0.378	1.23	0.274	.....	.....
0.36	0.877	0.58	0.652	0.80	0.496	1.02	0.373	1.24	0.270	.....	.....
0.37	0.864	0.59	0.645	0.81	0.489	1.03	0.367	1.25	0.266	.....	.....

Assuming spherical particles of diameter x, there are $\frac{6}{G_s \pi x^3}$ particles in a unit weight, hence the surface area per unit weight is $\frac{6}{G_s x}$, and for dy units of weight, the surface area is

$$dS = \frac{6}{G_s x}\, dy \tag{76}$$

Differentiating Eq. 73 and substituting its value for dy into Eq. 76

$$dS = \frac{600\, m}{G_s L^m}\, x^{m-2}\, dx$$

Therefore

$$S_2 - S_1 = \frac{600m}{G_s L^m (m - 1)}\, x^{m-1}\Big|_{x_1}^{x_2} \tag{77}$$

which is the surface area of spherical particles between the two sizes x_1 and x_2 for a unit weight of original material. For 100 units of volume of material, G_s may be dropped from the denominator and dy represents percentage weight. Surface area per unit weight for material less than L units in diameter and greater than N units in diameter is

$$S = \frac{600m}{L^m(m - 1)}\,(L^{m-1} - N^{m-1})$$

$$S = \frac{600m}{L(1 - m)}\left(\frac{N^{m-1} - L^{m-1}}{L^{m-1}}\right) = \frac{600m}{L(1 - m)}\,[(L/N)^{1-m} - 1] \tag{78}$$

Bond assumes, following Weinig (*28 CSMQ No. 3*), that a grind limit Z exists and assigns to it the value of 0.700μ, hence

$$S = \frac{600m}{L(1 - m)}\,(\text{antilog}\,[(1 - m)(\log L + 0.155)] - 1) \tag{79}$$

Example of Bond calculations. Plot the sizing analysis given in Table 47 on log-log paper. Two curves result, the w-curve (Fig. 132) when the figures in column 3, Table 47, are plotted as ordinates, and the F-curve when the figures in column 5 are plotted as ordinates. Draw a line of best fit (visually) for the w-curve. Determine the slope of the w-line, using two points, *e.g.*, ($x = 0.09$, $w = 2.4$) and ($x = 0.9$, $w = 12$), neither necessarily experimental, then

$$m = \frac{\log 12 - \log 2.4}{\log 0.9 - \log 0.09} = \frac{1.0792 - 0.3802}{1.9542 - 2.9542} = \frac{0.699}{1}$$

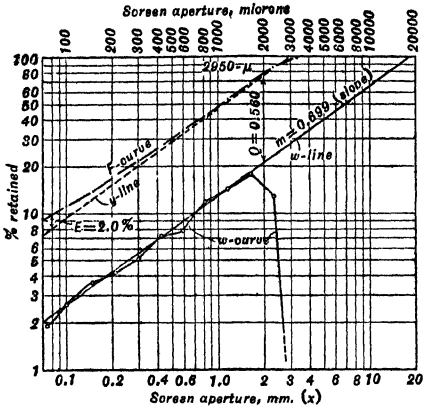

FIG. 132. Log-log plot for Table 47.

From Table 46 the value of Q is found to be 0.560. Determine the linear value of one cycle on the log-log paper (it was 2 3/4 in. on the original of Fig. 132). Multiply 0.560 by 2.75 = 1.54 in. and draw in a line parallel to the w-line displaced above it by 1.54 in.; this is the y-line. The intercept of the y-line with 100%-line is read off as 2,950-μ = L. The surface area in sq. meters for 100 cc. of material is calculated (Eq. 79) as

$$S = \frac{600 \times 0.699}{2950 \times 0.301} (\text{antilog}\,[0.301\,(\log 2 \times 950 + 0.155)] - 1)$$

whence S = 5.3 sq. meters per 100 cc. of material. The vertical displacement E between the F-curve and the y-line denotes the amount of material originally present finer than the grind limit. When appreciable amounts of clay, etc., are present E is positive. When E is negative a natural grind limit, Z_1, other than 0.7-μ is indicated. This may be calculated from

$$\log Z_1 = \log L - \frac{2 - \log(-E)}{m} \qquad (80)$$

and the value obtained used in Eq. 78 in place of N. For other screen analyses of an ore for which a positive E-value is known, the F-curve may be plotted first and the y-line located thereby by displacement of E-units downward from the F-curve.

Table 47. Sizing test for Bond example

Ordinal No.	Aperture, mm.	Weight, %	Cum. %, retained	Cum. %, passing
52	3.33	0.4	0.4	99.6
51	2.36	13.0	13.4	86.6
50	1.65	18.0	31.4	68.6
49	1.17	14.5	45.9	54.1
48	0.83	12.0	57.9	42.1
47	0.59	7.8	65.7	34.3
46	0.42	7.3	73.0	27.0
45	0.30	5.2	78.2	21.8
44	0.21	4.2	82.4	17.6
43	0.15	3.6	86.0	14.0
42	0.10	2.6	88.6	11.4
41	0.074	1.9	90.5	9.5
<200-m.	.....	9.5	9.5	.....
Colloidal	.....	.....	.....	.....

Significance of surface estimates. It is a little difficult to take these refinements in calculation seriously, for, at best, surface calculations based on sizing analyses are gross approximations. It appears that the distribution functions describe some observed distributions as closely, at least, as the size measurements approximate the truth, since sieve sizing, even with standardized screens, may be in error by 5%. The discrepancy between actual and calculable distribution at the coarse end of the size range is unimportant, because the contribution of the large sizes to the total surface area is negligible, within the accuracy set by other factors. The chief assumptions made are that particles are spherical, that there is a grind limit, and that distribution in subsieve sizes is linear and has the same slope as in the lower sieve sizes.

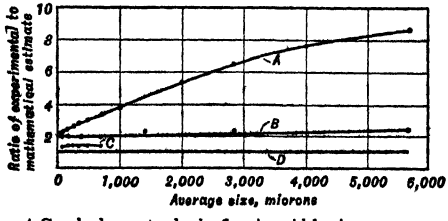

A Crushed quartz, hydrofluoric acid basis.
B Crushed quartz, silver basis.
C Ottawa sand, hydrofluoric acid basis.
D Mathematical estimate, based on assumption of spherical particles.

FIG. 133. Experimental *vs.* mathematical estimates of the superficial area of quartz.

It is probable that the superficial area of an aggregation of irregularly shaped particles is greater than the surface calculated on the assumption of spherical particles, but the ratio of these areas should be fairly constant if the particle shape does not change much with size. Gross and Zimmerley (*loc. cit.*), using the dissolution method for measuring surface, showed that the ratio of estimated to calculated surface area for Ottawa sand was fairly constant at an average

value of 1.34 : 1, over the range of 20- to 200-m. (Fig. 133), but that with crushed quarts it increased several hundred per cent. with increase in size, whereas with the silver-coating method, it was fairly constant at about 2. They attribute the high ratios by the dissolution method to cracks, penetrable by hydrofluoric acid but not by silver. Such cracks represent useful work done in crushing, because they are established surfaces of weakness in further comminution.

Weinig (*loc. cit.; 136 *7 J 336*) points out that the shape of particles changes with size and with method of breakage, hence the ratio of experimental results to those calculated on an assumption of invariable shape should not be constant. Weinig proposes a surface index, I_s, defined as

$$I_S = \frac{2 + R}{3} \tag{81}$$

where R is the ratio of the weight of a particle of given size assumed cubical to the actual weight. For example, 100 @ 10∼14-m. particles are weighed and the weight W_1 per particle computed. The weight, W, of a cube of this size is $(0.145)^3$, hence $R = \frac{W}{W_1}$. The product of the surface index and the surface of a cube of this size, *i.e.*, $6I_S x^2$ would give the probable mean surface for grain shapes other than cubical.

18. PARTICLE SIZE

Particles produced by crushing and grinding show an almost infinite variety of shape and size. No simple and accurate numerical expression of the dimensions of a single particle nor of the average dimensions of a group is possible; the best that can be done in any case is an approximation which is ordinarily expressed as a single number, as though the particles possessed some definite geometric shape. This number is called the DIAMETER or SIZE of an individual particle or the AVERAGE DIAMETER or AVERAGE SIZE of a group of particles.

Diameter of particle. The fundamental assumption of particle measurement is that the particle has three principal axes at right angles and that its dimensions are completely stated when the distances between the intercepts of the surface on the respective axes are given. Starting with this assumption, which is, on its face, only a crude approximation except in the case of materials with cubical cleavage, averaging of the three principal dimensions into a single figure is attempted by one of several different methods, as follows:

$$D = b \tag{82}$$

$$D = \frac{l + b + t}{3} \tag{84}$$

$$D = \sqrt[3]{lbt} \tag{86}$$

$$D = \frac{l + b}{2} \tag{83}$$

$$D = \sqrt{lb} \tag{85}$$

$$D = \sqrt{\frac{2lb + 2bt + 2lt}{6}} \tag{87}$$

$$D = \frac{3lbt}{lb + lt + bt} \tag{88}$$

where D = diameter and l, b, and t are respectively the distances between the intercepts of the surface on the long, intermediate, and short axes, or, in common parlance, length, breadth, and thickness of the particle. The significance of the first five approximations is immediately apparent; the sixth gives the edge of a cube whose total surface is equal to the total surface of a rectangular parallelopiped the dimensions of which are equal to the principal dimensions of the particle. The seventh is the harmonic mean of the dimensions. Green (*192 JFI 637; 204 ibid. 713*) develops the fact that this harmonic mean is a factor in the expression for specific surface. Thus, for a mass of spherical or cubical particles of the same size, $S_0 = 6/G_s D$, where S_0 = specific surface, G_s = specific gravity, and D = the diameter. But $S_0 = Ns$, where N = the number of particles per unit weight and s = the surface of each particle; whence, if the particles are taken as rectangular parallelopipeds, $S_0 = (1/G_s lbt)[2(lb + lt + bt)] = 2(lb + lt + bt)/G_s lbt$, and, by substitution in the first equation, $D = 3lbt/(lb + lt + bt)$. Which one of Eq. 82 to 88 is to be used in any given determination of particle size depends upon the method of measurement and the predilection of the experimenter. When screens are used, Eq. 82 is adopted perforce. When elutriation is employed without subsequent microscopic measurement of the fractions, Eq. 86 is necessarily involved. When individual particles are actually measured, any one of the seven assumptions may be employed, but Eqs. 83 and 85 are the ones most commonly used. When the Martin (*23 CerS 61*) statistical diameter is measured, Eq. 85 is preferred. Heywood (*56 CI 149*) showed that this diameter is closely related to the equivalent spherical diameter (*vide infra*) and evaluated a factor which when divided into the statistical diameter gives a close approximation to the equivalent spherical diameter.

For rounded sand particles it has a value of 1.05, for angular sand and crushed limestone particles the value is 1.3–1.45. Eq. 87 is no more accurate than Eq. 86 and involves much more computation, while Eq. 88 requires so much measurement and calculation, if a large number of particles is to be measured, as to be substantially impracticable.

Equivalent diameter (or NOMINAL, or EFFECTIVE DIAMETER) is a term used to describe an attempt to rationalize the infinitude of dimensions of an irregular particle. Such particles have definite volumes and surfaces, which, dimensionally and in a statistical sense, vary as the cube and square respectively of some linear dimension. This linear dimension is called the EQUIVALENT DIAMETER. When it is calculated from a measured volume, it designates the diameter of a sphere of equal volume and is, therefore, given by the equation

$$D_V = \sqrt[3]{6V/\pi} \quad \text{(EQUIVALENT SPHERICAL DIAMETER)} \tag{89}$$

If it is calculated from a measured surface A, it designates the diameter of a sphere of equal surface and is given by the equation

$$D_A = 6/AG_s \quad \text{(EQUIVALENT SURFACE DIAMETER)} \tag{90}$$

If it is based on the rate of fall in a fluid, it designates the diameter of a sphere of equal density and falling rate. If the rate is in the Stokes range, the equation is

$$D_S = \left[\frac{9}{2} \cdot \frac{vb}{g(G_s - G_l}\right]^{1/2} \quad \text{(EQUIVALENT STOKES DIAMETER)} \tag{91}$$

If the falling rate is in the Newton range, the equation is

$$D_N = v^2 G_l / K(G_s - G_l) \quad \text{(EQUIVALENT NEWTON DIAMETER)} \tag{92}$$

When the equivalent diameter is based on the projected area of the particle, it is referred to a circle having an equal area A_c and may be calculated by

$$D_c = \sqrt{4A_c/\pi} \quad \text{(EQUIVALENT CIRCLE DIAMETER)} \tag{93}$$

Heywood (*56 CI 149; 140 IMechE 257; 125 ibid. 383*) has shown that for a wide variety of particles the equivalent spherical diameter is closely related to sieve aperture and equivalent Stokes diameter, being usually 5 to 15% larger. For excessively flat or elongated particles this relation fails. Table 48 shows the degree of correlation to be expected. Heywood also showed that the use of the equivalent spherical diameter is permissible if a correction factor is applied. Table 49 gives typical values of this correction factor calculated from his measurements.

Table 48. Comparison of equivalent diameters (*after Carman*)

Sieving			
Material		k *a*	Dv/x *b*
Copper shot		0.520	1.04
Coal, 10-m		0.227	1.12
Coal, 2-in		0.326	1.08
Angular sand		0.258	1.11
Limestone, 10-m		0.315	1.00
Flake graphite		0.023	0.60
Mica		0.003	0.30
Stokes' law methods		Microscopic method	
k	Dv/D_s	k	Dv/D *c*
0.4	1.07	0.4	0.918
0.3	1.10	0.2	0.725
0.2	1.13	0.02	0.195
0.1	1.14		

a k is a volume factor, such that $kD^3 = \pi D^3/6$, hence equal to $\pi/6 = 0.524$ for a sphere.
b x = sieve aperture.
c D = statistical diameter = mean projected diameter.

Table 49. Comparison of volume and surface factors (*after Carman*)

Material	k Volume factor *a*	ϕ Surface factor *b*
Sand (rounded particles)	0.34	0.81
Glass (angular particles)	0.28	0.65
Tungsten powder	0.45	0.89
Pulverized coal	0.25	0.73
Mica	0.03	0.28

a See Table 48, footnote *a*.
b $\phi = D_A/D_V$.

Shape measures of particles have been proposed by Wadell (*40 JG 443; 41 ibid. 310; 217 JFI 459*) who defines the degree of sphericity of a particle, ψ, as the ratio

$$\psi = S'/S \tag{94}$$

where S' is the surface of a sphere which has same volume as the particle and S is the actual surface of the particle. Since the actual surface of the particle is usually impossible of measurement, Wadell developed the closely correlated measure of circularity C, which is defined as the ratio

$$C = c'/c \tag{95}$$

where c' is the circumference of a circle having the same cross-sectional area as the particle, and c is the actual perimeter of the cross-section. Dimension C is also incapable of measurement in most cases.

Wadell has, however, shown experimentally that the ratio

$$\phi = D_V/D_c \tag{96}$$

where D_V is derived from Eq. 89, and D_c is the diameter of the smallest sphere circumscribing the particle, is closely related to ψ. He found that for values of $\phi > 0.8$, $\psi = \phi$ approximately, and that for smaller values $\psi = \phi + 0.1$. These measures have valuable hydrodynamic characteristics. Table 50 gives values for the sphericity of various geometric bodies, and Fig. 134 gives the relation of Reynolds' number to drag for bodies of differing sphericities.

Table 50. Sphericities of some common geometric figures (*after Gaudin*)

Geometric figure		Sphericity
Sphere		1.000
Cube		0.806
Prism:	$a \times a \times 2a$	0.767
	$a \times 2a \times 2a$	0.761
	$a \times 2a \times 3a$	0.725
Disk:	$h = r$	0.827
	$h = r/3$	0.594
	$h = r/10$	0.323
	$h = r/15$	0.220
Cylinder:	$h = 3r$	0.860
	$h = 10r$	0.691
	$h = 20r$	0.580

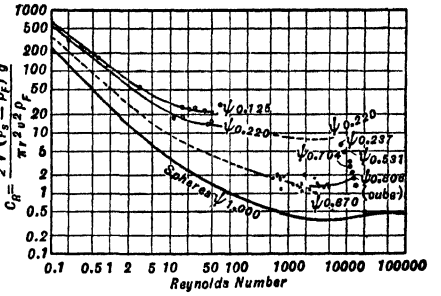

FIG. 134. Coefficient of resistance *vs.* Reynolds' number for solids of different sphericities (*after Wadell*).

Experimental determination may be made by taking photomicrographs of fields and projecting on such a scale that the diameters of circumscribed circles may be determined.

Particle-shape factors have been calculated by a number of workers. Martin *et al.* (*23 CerS 61*) have shown that the true volume V of a mass of irregularly shaped particles of nominal diameter D is proportional to $(\sqrt[3]{\Sigma nD^3/\Sigma n})^3$, Eq. 111; *i.e.*

$$V = K_V(\sqrt[3]{\Sigma nD^3/\Sigma n})^3 \tag{97}$$

This relationship is not applicable to the individual particles. If the particles are spherical, $K_V = \pi/6$; for other materials $K_V < \pi/6$. Similarly the aggregate surface area A_S of a collection of particles is proportional to $(\sqrt{\Sigma nD^2/\Sigma n})^2$, Eq. 110; *i.e.*

$$A_S = K_S(\sqrt{\Sigma nD^2/\Sigma n})^2 \tag{98}$$

For spherical particles $K_S = \pi$; otherwise $K_S < \pi$. Table 51 gives shape factors by Martin *et al.* and by Hatch and Choate (*207 JFI 369*).

Table 51. Particle-shape factors

Material	Mean diameter	K_V
Quartz	1.7 to 64.2 *c*	0.140 *a*
Do.	0.19 *d*	0.17 *b*
Do.	0.22 *d*	0.28 *b*
Do.	0.26 *e*	0.28 *b*
Do.	0.30 *c*	0.27 *b*
Do.	0.36 *e*	0.27 *b*
Calcite	1.2 to 69.0 *c*	0.135 *a*
Granite	1.5 to 72.0 *c*	0.140 *a*

a Hatch and Choate.
b Martin *et al.*
c Geometric mean in microns.
d Geometric mean in cm.
e $[\Sigma nd^3/\Sigma n]^{1/3}$.

Projected area of particles. Faust and Cooke (*RI 3460*) describe a method for the rapid determination of the projected area of opaque particles. The method comprises (1) a measurement of the current I generated by a photoelectric cell where light from a uniformly illuminated field of area A is incident upon the photosensitive element; and (2) a similar measurement of photoelectric current I' when the illuminated area A' has been decreased by blocking out with opaque particles. The ratio of the currents is exactly proportional to the ratio of the illuminated areas, *i.e.*, $A'/A = I'/I = (A - A_0)/A$ and

$$A_0 = A(I - I')/I \tag{99}$$

where A_0 = opaque area. Hence A_0 can be calculated from the measured values of I', I, and A.

Apparatus required is a microscope with transmitted light and a photoelectric cell. Faust and Cooke used an S-28 ocular photoelectric cell which can generate a current of 150 microamperes at 1,000 lux, adapted to the microscope so that the cell rested exactly above the eye lens of the ocular. A Leeds & Northrup type R moving-coil galvanometer was used with an external Ayrton shunt of 25,000 ohms. The sample was mounted on a slide in the usual manner (Art. 9), dispersed in a single-particle layer. The light source may be a 6-v. 32-c.p. automobile headlight bulb on a storage-battery, but uniformity of the field must be examined by placing an opaque object, perforated with a small hole, on the stage of the microscope and exploring the field. A large sub-stage condenser with a 4-v. bulb in a centerable socket is more satisfactory.

Procedure. (1) Place prepared slide on a mechanical stage and focus. (2) Locate a field in the mount which contains no particles, and note its co-ordinates. (3) Place ocular photoelectric cell in position and note galvanometer deflection d_1. (4) Locate a field containing opaque particles, count them, and determine the galvanometer deflection d_2 for the field. (5) Determine diameter of this field with a stage micrometer.

Calculation. Percentage of area blocked out by the particles $= 100(d_1 - d_2)/d_1$. Average single particle area $= \frac{100A}{n}\left(\frac{d_1 - d_2}{d_1}\right)$, where n = number of particles and A = field area calculated from measurement (5).

Table 52. Comparison of screen apertures determined by projected areas and by micrometry

Screen, mesh	Micrometric calibration, μ	Ocular photoelectric cell calibration, μ	Factory markings, μ
150	108	108	104
200	74	75	74
270	56	58	53
400	35	36	38

Accuracy. Faust and Cooke (*RI 3480*) tested the method by measuring the projected areas of calibrated screens and comparing with micrometric determination. Results are given in Table 52.

Time required to prepare slides, make the measurements and the photomicrographs, count grains and complete calculations is 3 to 4 hr. per sample.

Average diameter is calculated by some method of averaging the mean or equivalent diameters of a number of particles. Perrott and Kinney (*6 ACerS 417*) and Green (*204 JFI 637*) give the following summary of suggested methods:

Arithmetical mean	$D_A = (d_1 + d_2)/2$	(100)
Geometrical mean	$D_G = \sqrt{d_1 d_2}$	(101)
Laschinger's mean	$D_E = (d_1 - d_2)/(\log_e d_1 - \log_e d_2)$	(102)
Mellor's mean	$D_M = \sqrt[3]{(d_1 + d_2)(d_1^2 + d_2^2)/4}$	(103)
Mean of form	$D_F = 4(d_1^5 - d_2^5)/5(d_1^4 - d_2^4)$	(104)
Von Reytt's mean	$D_R = 0.435(d_1 + d_2)$	(105)
Number mean	$D_N = \Sigma nd/\Sigma n$	(106)
Length mean	$D_L = \Sigma nd^2/\Sigma nd$	(107)
Surface mean	$D_S = \Sigma nd^3/\Sigma nd^2$	(108)
Volume mean	$D_V = \Sigma nd^4/\Sigma nd^3$	(109)
Square-root mean	$D_B = \sqrt{\Sigma nd^2/\Sigma n}$	(110)
Cube-root mean	$D_C = \sqrt[3]{\Sigma nd^3/\Sigma n}$	(111)
Harmonic mean	$D_H = \Sigma n/[\Sigma(n/d)]$	(112)

where D is the mean diameter, d_1 and d_2 are the maximum and minimum mean particle diameters, respectively; d represents the successive mean particle diameters in a sizing operation, and n the numerical frequency of the corresponding d.

Formulas 100 to 104 are based on the assumption of an even gradation in size from maximum to minimum and necessarily also on an equal number of particles in each size group, or else they disregard the effect of frequency of occurrence of particles of the different sizes. Formula 105 is clearly an approximation to formula 100. Formulas 106 to 109 consider and weight the intermediate sizes on the bases, respectively, of (*a*) number of particles in the successive grades; (*b*) total length of mean diameters in these grades, *i.e.*, number of particles in a grade times mean particle diameter; (*c*) total surface, *e.g.*, number of particles in the grades times mean particle diameter squared; and (*d*) total volume, *i.e.*, number of particles times mean particle volume.

Eq. 106 has the physical significance that if the particles under investigation were laid side by side in a line and the length of the line was divided by the number of particles the quotient would be the number D_N. If the area covered by these particles was divided by the length of the line, the quotient would be the value D_L given in Eq. 107. On this base, the average height of a parallelopipedon equal in volume to the total volume of

Σn particles is the D_S of Eq. 108. Formula 109 is the equivalent of $D = \Sigma vd/\Sigma w$, where w = percentage weights of the different grades and the other letters have the significance already assigned. This is the formula commonly used when sizing is done by screens, sedimentation, or elutriation, and when the amounts of the various grades are determined by weight. Formula 110 gives the edge of a cube whose surface multiplied by the total number of particles in a given mass of particles is equal to the total surface of the mass, if the particles are taken as cubes. Formula 111 gives the edge of a cube whose volume multiplied by the total number of particles is equal to the total volume of the particles sized, considered as cubes. Formula 112 gives the harmonic mean of the diameters.

Comparison of methods. Perrott and Kinney (*loc. cit.*) give the microscopic sizing analysis shown in Table 53. Comparison of the average diameters calculated by the different formulas points clearly the uncertainty of meaning of this term and the necessity for stating the method of calculation when giving a numerical result. The result by formulas 100 to 105 is not affected in any way by the amounts

Table 53. Comparison of methods of calculating average diameter

Microscopic analysis

Diameter, microns (d)..	60	50	40	30	20	10	5	2
Number of particles (n).	87	100	156	660	1,750	6,200	25,600	155,000
	Percentages							
$\frac{n}{\Sigma n}$	0.05	0.05	0.1	0.3	0.9	3.3	13.5	81.8
$\frac{nd}{\Sigma nd}$	0.9	0.9	1.1	3.4	6.1	10.7	23.7	53.2
$\frac{nd^2}{\Sigma nd^2}$	7.8	6.3	6.3	14.9	17.5	15.5	16.1	15.6
$\frac{nd^3}{\Sigma nd^3}$	22.4	14.9	11.9	21.2	16.7	7.4	3.8	1.5

AVERAGE DIAMETER

	Formula	*Microns*
100.	$D_A = (d_1 + d_2)/2 = (60 + 2)/2$	= 31
101.	$D_G = \sqrt{d_1 d_2} = \sqrt{60 \times 2}$	= 11
102.	$D_E = (d_1 - d_2)/(\log_e d_1 - \log_e d_2) = (60 - 2)/(2.303[1.7782 - 0.3010])$	= 17.0
103.	$D_M = \sqrt[3]{(d_1 + d_2)(d_1^2 + d_2^2)/4} = \sqrt[3]{(60 + 2)(3{,}600 + 4)/4}$	= 38.2
104.	$D_F = 4(d_1^5 - d_2^5)/5(d_1^4 - d_2^4) = 4(60^5 - 2^5)/5(60^4 - 2^4)$	= 48
105.	$D_R = 0.435(d_1 + d_2) = 0.435(60 + 2)$	= 27
106.	$D_N = \Sigma nd/\Sigma n = (0.05 \times 60 + \cdots 81.8 \times 2)/100$	= 3.0
107.	$D_L = \Sigma nd^2/\Sigma nd = (0.9 \times 60 + \cdots 53.2 \times 2)/100$	= 7.0
108.	$D_S = \Sigma nd^3/\Sigma nd^2 = (7.8 \times 60 + \cdots 15.6 \times 2)/100$	= 21.0
109.	$D_V = \Sigma nd^4/\Sigma nd^3 = (22.4 \times 60 + \cdots 1.5 \times 2)/100$	= 36.4
110.	$D_B = \sqrt{\Sigma nd^2/\Sigma n} = \sqrt{(87 \times 60^2 + \cdots 155{,}000 \times 2^2)/(87 + \cdots 155{,}000}$	= 4.6
111.	$D_C = \sqrt[3]{\Sigma nd^3/\Sigma n} = \sqrt{(87 \times 60^3 + \cdots 155{,}000 \times 2^3)/(87 + \cdots 155{,}000)}$	= 7.6
112.	$D_H = \Sigma n/\Sigma(n/d) = 190{,}453/83{,}357$	= 2.3

in any of the grades. These formulas will, therefore, each give the same result for any mass of grains of mixed sizes, irrespective of the size composition of the mass, if, only, the largest and smallest particles are in every case of the same sizes. This fact condemns these formulas for anything but the crudest kind of work. Formulas 108 and 109 place too much weight on the coarser sizes and both they and No. 107 give results that have no real meaning in terms of the diameter of ideal particles which could be substituted for the actual particles. On the other hand, No. 108 is useful when specific surface is important, as is also Eq. 112. Results by formulas 106, 110, and 111 have the meanings already developed. Which of the three should be used in any given case is a matter of individual preference, since it is impossible to choose scientifically. No. 106 gives the easiest calculations and the physical significance is most readily visualized. It weights the finest particles most heavily and, therefore, gives an average that leans toward the fine end. No. 109 weights the coarsest particles most heavily and consequently the result leans toward the coarse end. No. 110 is intermediate between the other two and would, on that score alone, seem to be preferable. It is distinctly to be preferred when surface is the valuable property of the material.

Uniformity. The complete information regarding the texture of a mass of broken material is not expressed by the average size. Thus in Fig. 135 curves *a*, *b*, and *c* represent three possible sizing tests which indicate the same average size of material, but *c*, on account of the coarse material present, will appear coarser than either of the other two, whereas *a*, on account of the lack of fines, may appear coarser than *b*. Green (*loc. cit.*) gives the following equation from statistical mathematics for expressing the degree of uniformity as a coefficient

$$U = \Delta x \sqrt{n/2\Sigma f^2} \qquad (113)$$

where Δx is the difference between two successive values on the X-axis (size-axis), made equal to unity for convenience in calculation; n is the total number of particles measured, and f is the difference in units of length between the measured diameter of a given particle or group of particles of substantially the same size and the average diameter of the whole number of particles n.

Thus in Table 54, columns 1 and 2 represent the results of a particle count on a slide at a magnification of 20,000 diameters. Average particle size as measured at 20,000 magnification is

$$D_{(\times 20,000)} = \frac{\Sigma nd}{\Sigma n} = \frac{2,881}{276} = 10.44 \text{ mm.}$$

and $D = 0.522$-μ. Column 4 gives deviations, in millimeters, at 20,000 magnification, between the diameters of the particles in the corresponding size groups and the mean diameter (*i.e.*, 10.44 less the

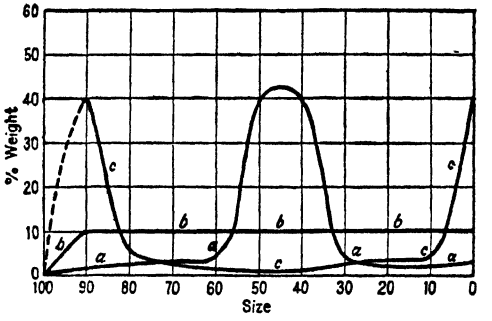

FIG. 135. Plots of three products showing the same average size $D = \Sigma wd/\Sigma w$.

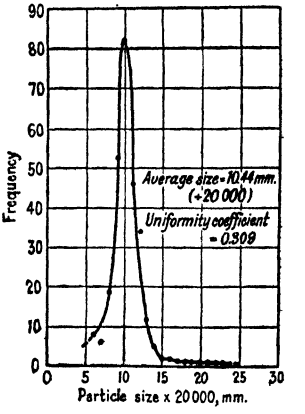

FIG. 136. Frequency plot of data in Table 54.

number in column 1). Column 5 gives the squares of the numbers in column 4 and column 6 the product of columns 2 and 5. The total of column 6 is Σf^2 of the formula. The total of column 2 is n. Hence

$$U = 1\sqrt{276/2(1,449)} = 0.309.$$

The uniformity coefficient ranges between 0, representing complete lack of uniformity, or no two particles of the same size, and ∞, which indicates all particles of the same size. The significance of the number 0.309, given above, is indicated by Fig. 136, which is a frequency plot of the data given in Table 54.

Table 54. Microscopic-sizing analysis

Col. 1	Col. 2	Col. 3	Col. 4	Col. 5	Col. 6
Diameter, mm., d	Number of particles, n Total = Σn [a]	nd Total = Σnd	$f = \frac{\Sigma nd}{\Sigma n} - d$	f^2	nf^2 Total = Σf^2
6	8	48	4.44	19.71	157.68
7	6	42	3.44	11.83	70.98
8	19	152	2.44	5.95	113.05
9	53	477	1.44	2.07	109.71
10	82	820	0.44	0.19	15.58
11	46	506	0.56	0.31	14.26
12	34	408	1.56	2.43	82.62
13	12	156	2.56	6.55	78.60
14	5	70	3.56	12.67	63.35
15	2	30	4.56	20.79	41.58
16	2	32	5.56	30.91	30.90
17	1	17	6.56	43.03	43.03
18	1	18	7.56	57.15	57.15
19	1	19	8.56	73.27	73.27
20	1	20	9.56	91.39	91.39
21	1	21	10.56	112.40	112.40
22	1	22	11.56	134.60	134.60
23	1	23	12.56	158.80	158.80
Totals.....	276	2,881	.....	.....	1,449

[a] Frequency.

19. PRESENTATION OF SIZING TESTS

Sizing tests are made to (*a*) obtain quantitative information, or (*b*) investigate causal relationships in some operation or process under investigation. In the first case extent of conformity to some set specification is sought; in the second understanding to enable control and/or prediction is the end.

The general problem of presentation of data is soluble in terms of methods of analysis designed to extract from the raw data all of the essential information contained therein, in such form as is best suited to answer pertinent questions that may be posed concerning them. Complete solution to the presentation of sizing data is possible when an equation (distribution law) is known which accurately relates size or some function thereof to weight or some function thereof. Once the distribution law is known, any question of fact as to size may be answered in precise quantitative form.

Determination of distribution functions has been treated generally by Pearson (see p. 147), who showed that the function may be represented as a solution to a differential equation. This equation is applicable to size distributions normally found in mineral dressing, *i.e.*, the distribution contains only one maximum and vanishes gradually at the ends of the size range. Some size distributions possess the maximum and do not vanish gradually at the coarse end. When two maxima exist, one of them is very faint and may be neglected if a first approximation only is sought. Likewise, rapid vanishment of the function at the coarse end may be neglected in first approximation. There are, of course, an infinity of solutions to Pearson's differential equation; the choice made is dictated by the boundary conditions imposed. Of the many proposed solutions, the following appear to be most useful:

Normal probability function:

$$n = \frac{\Sigma n}{\sigma\sqrt{2\pi}} e^{-\frac{(D-D_{av})^2}{2\sigma^2}} \tag{114}$$

where n = the number of particles of size D, and σ = standard deviation. This is useful in some microscopic-sizing tests, but it is rarely obeyed. APPLICABILITY of the equation may be tested by plotting data on arithmetic-probability or logarithmic-probability paper, with size on the arithmetic or logarithmic axis and cumulative per cent. retained (or through) on the probability axis. If a straight line results this equation may be applicable to the data (see Fig. 137, item *K*).

Skewed probability function:

$$n = \frac{\Sigma n}{\log \sigma_g \sqrt{2\pi}} e^{-\frac{(\log D - \log D_G)^2}{2 \log^2 \sigma_g}} \tag{115}$$

where D_G = geometric mean diameter and $\log \sigma_g$ = log-geometric standard deviation $\left(= \sqrt{\frac{\Sigma [n \log D - \log D_G^2]}{\Sigma n}} \right)$. This form is frequently met in microscopic sizing.

Hatch and Choate equations (*207 JFI 369*) are useful in calculating mean diameters. They are derived by means of the skewed function. They are

$$\log D_A = \log D_G + 1.151 \log^2 \sigma_g \tag{116}$$

$$\log D_B^2 = \log D_G^2 + 4.605 \log^2 \sigma_g \tag{117}$$

$$\log D_C^3 = \log D_G^3 + 10.362 \log^2 \sigma_g \tag{118}$$

These equations may be used to compute diameter of a grain having average surface area and average volume.

Rosin-Rammler function (*7 JIF 29*):

$$w_r = 100\, e^{-\left(\frac{D}{a}\right)^b} \tag{119}$$

where w_r = cumulative per cent. weight retained, D is the D_A from Eq. 100, and a and b are constants. This equation provides an excellent fit for size distribution of broken coal and relatively fine crushed ore. It has the advantage of a scientific basis, as its authors and Bennett (*10 JIF 22*) have shown. To test its applicability to a set of data, plot log (log $100/w_r$) against log of size; if a straight line results the equation holds (see Fig. 137, item *J*).

If the values of a and b for a particular material to which the Rosin-Rammler equation is applicable are known, the size distribution is completely specified. The constants a and b are best determined from the linear curve resulting from the Rosin-Rammler plot (Fig. 137, item *J*). Rearrange Eq. 119 thus: $100/w_r = e^{(D/a)^b}$. Then $\ln (100/w_r) = (D/a)^b$, and $\ln (\ln [100/w_r]) = b(\ln D - \ln a) = b \ln D - b \ln a$ (ln = Naperian logarithm). Let $\ln (\ln [100/w_r]) = y$, $\ln D = x$, and $b \ln a = a$ constant $= c$. Then $y = bx + c$, and b is the slope of the line, while $b \ln a$ is the y-intercept.

Further, if in Eq. 119, $D = a$, $w_r = 100e^{-(a/a)^b} = 100e^{-(1)^b} = 100/e = 36.8\%$, *i.e.*, a is that aperture which would retain 36.8% of the sample. This is called the ABSOLUTE SIZE CONSTANT. It is not the mean particle size by weight, surface, or length. DISPERSION CONSTANT, b, measures dispersion of material over the size range, since for small values of b, the size curve is close to the size-axis, and the material is spread over a wide size range; whereas if b is large, the curve is steeper and material is spread over a narrower range of sizes. Products naturally comminuted rarely have values of b less than 0.6. When b is about 3.0 the Rosin-Rammler function deteriorates and is best replaced by the Gaussian (normal probability) function.

Roller function:

$$w_t = a\sqrt{D}\, e^{-b/D} \qquad (120)$$

where w_t = cumulative per cent. through, and a and b are constants. To test for application to data, plot $w_t/\sqrt{D}$ on a log scale against reciprocal of diameter on an arithmetic scale; a straight line shows applicability.

Gaudin function:

$$w_r = aD^b \qquad (121)$$

$$w_t = 100(D/A)^b \qquad (122)$$

where a, b, and A are constants, w_r is the per cent. weight retained on screen with aperture D and passing next larger screen, and w_t is the cumulative per cent. weight passing a screen of aperture D. This equation has wide application but lacks the scientific basis of the Rosin-Rammler function. If a straight line results when cumulative per cent. through is plotted against size on log-log paper, the function is applicable (see Fig. 137, item G).

The significance of the constants in this function may be developed as follows: If D = one unit, $w_r = a(1)^b = a$, *i.e.*, a is the weight of material retained on the unit aperture and passing the next coarser aperture; it is a function of the particular unit of length chosen and of the sieve series used. Taking logarithms of the equation, $\ln w_r = \ln a + b \ln d$. Thus b is the slope of the linear curve obtained from the log-log plot (Fig. 137, item G) and $\ln a$ is the w-intercept.

The Gaudin function is usually applicable to a part of the data only, *i.e.*, to the finer sizes, hence b measures dispersion of material in the fine sizes.

The DERIVED GAUDIN EQUATION (Eq. 122) has two forms according to whether a lower size limit is postulated. If not, the form is as given (Eq. 122); with a lower limit

$$w_t = 100\,[(D/A)^b - (D_0/A)^b] \qquad (123)$$

where D_0 = the size limit. If the same mathematical analysis is applied to Eq. 122 or 123, it appears that A is the aperture of the upper limiting screen and b measures dispersion of material over the entire size range.

Comparison of Rosin-Rammler and Gaudin functions. For sizes below the absolute size constant, the two functions are identical. Thus the size distribution given in column 3 of Table 55 has been plotted in Fig. 137, items D, G, and J. The various approximately straight distribution lines indicate applicability. Values of the constants and size distributions, as calculated therefrom, are compared in Table 56.

Table 55. Sizing test plotted on Fig. 137

Mesh	Aperture, mm.	Weight, % *a*	Weight, cum. % through	Weight, cum. % retained	Reciprocal of aperture	% limiting aperture	Log log ($100/w_r$)	Ordinal No.	Ord. No. × wt., %
0.52-in.	13.3	0	100.1	0	0.079	100.0	.....	0	0
0.37-in.	9.4	3.5	96.5	3.5	0.105	70.7	+0.167	1	3.5
3...	6.7	15.5	81.1	19.0	0.148	50.3	−0.142	2	31.0
4...	4.7	17.4	63.7	36.4	0.213	35.3	−0.358	3	52.2
6...	3.3	12.0	51.7	48.4	0.303	24.8	−0.502	4	48.0
8...	2.4	9.1	42.6	57.5	0.417	17.9	−0.619	5	45.5
10...	1.7	9.2	33.4	66.7	0.588	12.8	−0.755	6	55.2
14...	1.2	6.3	27.1	73.0	0.834	9.0	−0.865	7	44.1
20...	0.83	5.4	21.7	78.4	1.29	6.2	−0.976	8	43.2
28...	0.59	4.3	17.4	82.7	1.69	4.4	−1.084	9	38.7
35...	0.42	3.1	14.3	85.8	2.38	3.2	−1.177	10	31.0
48...	0.30	2.9	11.4	88.7	3.33	2.3	−1.284	11	31.9
65...	0.21	2.4	9.0	91.1	4.76	1.6	−1.392	12	28.8
100...	0.15	1.9	7.1	93.0	6.67	1.1	−1.503	13	24.7
150...	0.10	1.2	5.9	94.2	10.0	0.8	−1.586	14	16.8
200...	0.074	1.1	4.8	95.3	13.5	0.6	−1.679	15	16.5
< 200...	.....	4.8	.....	.....	.....	.....	.....	16	76.8
		100.1	.....	.....	.....	.....	.....	.....	587.9

a Data (*112 A 154*).

Bibliography. Austin (*11 IEC 334*); Bennett (*10 JIF 22*); Geer and Yancey (*130 A 250*); Gaudin (*73 A 253*), Andreasen (*27 KC 370*); Carey (*17 Trans. Soc. Glass Tech. 345*); Elderton, *Frequency*

Curves and Correlation, C. and E. Layton, London, 1927; Heywood (*8 JIF 241; 125 IMechE 384*); Martin *et al.* (*23 CerS 61*); Pearson (*186 Phil. Trans. Ser. A 343; 216 ibid. 429*); Rosin and Rammler (*7 JFI 29*); Weinig (*28 CSMQ No. 3*); Schuhman (*A TP 1189*).

Methods of plotting sizing tests. Fundamentally the graph of a sizing test portrays a relationship between particle sizes and the weights thereof in a mixture comprising grains of many sizes. Conventionally weight functions are plotted as ordinates and size functions as abscissae. Different types of graphs are characterized by the reference point from which weight is calculated, and by the functions of weight and size that are plotted. DIRECT plots are those in which the weight is referenced to the interval between screens, *i.e.*, the weight plotted at a given size is that of the material retained on the screen of that aperture and passing the next coarser screen. CUMULATIVE plots use either the finest screen or the coarsest screen as the reference. A CUMULATIVE-RETAINED graph plots against a given size abscissa the total weight (percentage) in the sample that is retained on a screen of that aperture; a CUMULATIVE-PASSING graph plots against a particular abscissa the percentage of the total sample weight that passes a testing sieve of that aperture. The usual functions of weight that are graphed are arithmetic and logarithmic percentages; special functions are plotted in Fig. 137, items *J*, *K*, *L*. The usual functions of aperture are arithmetic, percentage of limiting, reciprocal, and, occasionally, probability (item *K*). In designating types of

Table 56. Comparison of Rosin-Rammler and Gaudin functions

Aperture, mm.	Rosin-Rammler Function							Derived Gaudin Function						Gaudin Function						
	$D/6.3$	Log $(D/6.3)$	0.625 log $(D/6.3)$	Log^{-1} [0.625 log $(D/6.3)$]	$e^{-(D/a)^b}$	Calc. w_r	Obs. w_r	Calc. −Obs.	D/A	Log (D/A)	0.623 log (D/A)	Log^{-1} [0.623 log (D/A)]	Calc. wgt.	Obs. wgt.	Calc. −Obs.	Log d	0.632 log D	Log^{-1} (0.632 log D)	Calc. wgt.	Obs. wgt.	Calc. −Obs.
13.3	2.11	0.324	0.203	1.60	0.202	20.2	0	+20.2	1.40	0.146	0.0909	1.23	123.0	100.1	+22.9	1.124	0.710	5.13	31.6	0	+31.6
9.4	1.49	0.173	0.108	1.28	0.278	27.8	3.5	+24.3	0.99	$\bar{1}$.996	$\bar{1}$.997	0.993	99.3	96.6	+2.7	0.973	0.615	4.12	24.7	3.5	+21.2
6.7	1.06	0.025	0.0158	1.04	0.353	35.3	19.0	+16.3	0.706	$\bar{1}$.849	$\bar{1}$.906	0.805	80.5	81.1	−0.6	0.826	0.522	3.33	20.0	15.5	+4.5
4.7	0.746	$\bar{1}$.873	$\bar{1}$.921	0.834	0.434	43.4	36.4	+7.0	0.495	$\bar{1}$.695	$\bar{1}$.810	0.646	64.6	63.7	+0.9	0.672	0.424	2.66	15.9	17.4	−1.5
3.3	0.524	$\bar{1}$.719	$\bar{1}$.824	0.667	0.512	51.2	48.4	+2.8	0.347	$\bar{1}$.540	$\bar{1}$.713	0.516	51.6	51.7	−0.1	0.519	0.328	2.13	12.8	12.0	+0.8
2.4	0.381	$\bar{1}$.581	$\bar{1}$.738	0.547	0.578	57.8	57.5	+0.3	0.253	$\bar{1}$.403	$\bar{1}$.628	0.425	42.5	42.6	−0.1	0.380	0.240	1.74	10.4	9.1	+1.3
1.7	0.270	$\bar{1}$.431	$\bar{1}$.644	0.441	0.644	64.4	66.7	−2.3	0.179	$\bar{1}$.253	$\bar{1}$.535	0.343	34.3	33.4	−0.1	0.230	0.145	1.40	8.4	9.2	−0.8
1.2	0.190	$\bar{1}$.279	$\bar{1}$.549	0.354	0.701	70.1	73.0	−2.9	0.126	$\bar{1}$.100	$\bar{1}$.439	0.275	27.5	27.1	+0.4	0.079	0.0499	1.12	6.7	6.3	+0.4
0.83	0.132	$\bar{1}$.121	$\bar{1}$.451	0.283	0.753	75.3	78.4	−3.1	0.0874	$\bar{2}$.942	$\bar{1}$.341	0.219	21.9	21.7	+0.2	$\bar{1}$.919	$\bar{1}$.948	0.887	5.3	5.4	−0.1
0.59	0.0936	$\bar{2}$.971	$\bar{1}$.357	0.228	0.795	79.5	82.7	−3.2	0.0621	$\bar{2}$.793	$\bar{1}$.248	0.177	17.7	17.4	+0.3	$\bar{1}$.771	$\bar{1}$.855	0.716	4.3	4.3	0.0
0.42	0.0666	$\bar{2}$.824	$\bar{1}$.265	0.184	0.830	83.0	85.8	−2.8	0.0442	$\bar{2}$.645	$\bar{1}$.156	0.143	14.3	14.3	0.0	$\bar{1}$.623	$\bar{1}$.762	0.578	3.5	3.1	+0.4
0.30	0.0476	$\bar{2}$.678	$\bar{1}$.174	0.149	0.861	86.1	88.7	−2.6	0.0316	$\bar{2}$.500	$\bar{1}$.066	0.116	11.6	11.4	+0.2	$\bar{1}$.477	$\bar{1}$.669	0.467	2.8	2.9	−0.1
0.21	0.0333	$\bar{2}$.522	$\bar{1}$.076	0.119	0.886	88.6	91.1	−2.5	0.0221	$\bar{2}$.344	$\bar{2}$.968	0.0929	9.3	9.0	+0.3	$\bar{1}$.322	$\bar{1}$.571	0.372	2.2	2.4	−0.2
0.15	0.0238	$\bar{2}$.377	$\bar{2}$.986	0.0968	0.906	90.6	93.0	−2.4	0.0158	$\bar{2}$.199	$\bar{2}$.878	0.0755	7.6	7.1	+0.5	$\bar{1}$.176	$\bar{1}$.479	0.301	1.8	1.9	−0.1
0.10	0.0159	$\bar{2}$.201	$\bar{2}$.676	0.0752	0.928	92.8	94.2	−1.4	0.0105	$\bar{2}$.021	$\bar{2}$.767	0.0585	5.9	5.9	0.0	$\bar{1}$.000	$\bar{1}$.368	0.233	1.4	1.2	+0.2
0.074	0.0117	$\bar{2}$.068	$\bar{2}$.793	0.0621	0.940	94.0	95.3	−1.4	0.00779	$\bar{3}$.892	$\bar{2}$.687	0.0486	4.9	4.8	+0.1	$\bar{2}$.869	$\bar{1}$.285	0.193	1.2	1.1	+0.1
	$a = 6.3$ mm., $b = 0.625$								$A = 9.5$ mm., $= 0.623$							$a = 6.0\%$, $b = 0.632$					

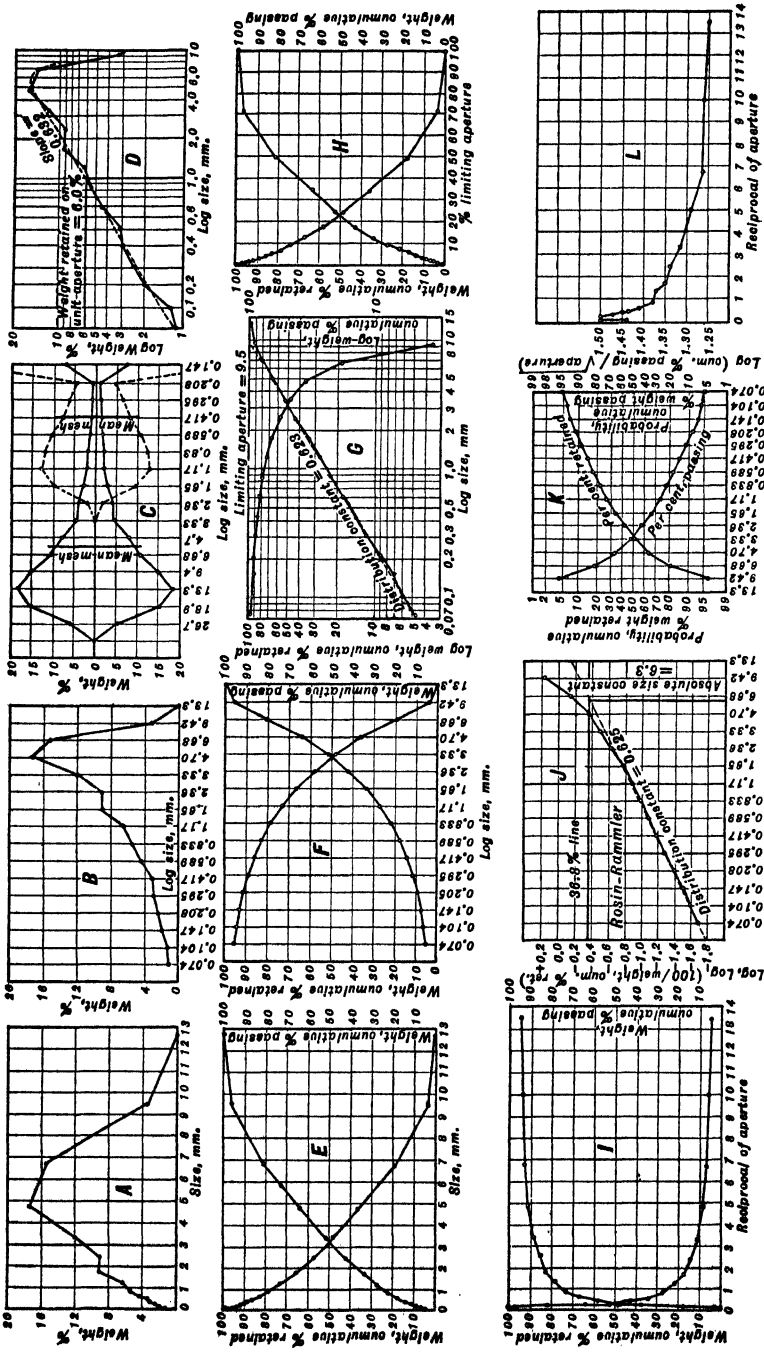

Fig. 137. Methods of plotting sizing tests.

graphs (see below) the characteristics of the ordinate precede the × sign; those of the abscissa follow. Common and some more unusual forms are shown in Fig. 137.

A. Direct, arithmetic both ways. The graph has the advantage of familiarity, but the fine sizes are so crowded as to make this portion of the curve practically meaningless.

B. Direct-arithmetic×log (single). Using screens with apertures increasing by a constant ratio, logarithms of apertures increase by a constant, hence abscissae of successive apertures are equally spaced along the horizontal axis. The curve necessarily terminates with the oversize of the finest screen, because of lack of knowledge of the size distribution of the undersize of this screen, and the fact that the logarithm of zero is infinity. Comparing items *A* and *B*, it is to be seen that the latter spreads out the fine part of the curve and compresses the coarse, so that distribution in the fine range is much easier to read.

C. Direct-arithmetic×log (mirror). This form was proposed by Coghill (*126 J 934*) as a means to aid visualization of the physical significance of a screen analysis, which it does. Otherwise it differs from form *B* only in that it assumes all of the <20-m. material to be of 0.147-mm. size for purposes of plotting. Comparison of curves for a feed (full) and for product (dotted) of a given comminuting operation gives a certain measure of the performance thereof. MEAN MESH is determined by the mesh or aperture (mm.) of the screen whose ordinal number $N_m = N_i W_i/100$, where N_i = ordinal assigned to the ith screen (number assigned to undersize of finest screen is that which would have been assigned to the next finer screen) and W_i = per cent. weight retained on ith screen and passing next larger screen.

D. Direct-log×log. This plot tends to straighten out the fine leg of the curve. It is used to investigate the applicability of distribution analysis of the Gaudin type.

E. Cumulative, arithmetic both ways. This graph reads directly at any point the total oversize and undersize of a given screen, but has the same disadvantage of crowding in the fine sizes as item *A*. The per cent.-passing and per cent.-retained curves are mirror images.

F. Cumulative-arithmetic×log. This graph has the advantages of both logarithmic and cumulative plots. The per cent.-passing and per cent.-retained curves are mirror images.

G. Cumulative-log×log. This method tends to straighten the per cent.-retained curve throughout its length. It is used as a test for applicability of the derived-Gaudin function. The per cent.-passing curve is not a mirror image.

H. Cumulative-arithmetic×per cent. limiting aperture. This graph is particularly useful in comparing screen tests of products in different size ranges, as, for instance, the discharges of a jaw crusher and of a ball mill. It reduces both ordinates and abscissae to the same scale, and all curves have common end points.

I. Cumulative-arithmetic×reciprocal aperture. This graph reverses the crowding of the direct arithmetic-aperture plots, and is useful to spread out the points when the amounts of fine material are small and of large material great, as in the case plotted. In the reverse condition, the curve becomes very crowded in the coarse end. Per cent.-passing and per cent.-retained curves are mirror images.

J. Cumulative-log log reciprocal×log. This is the plot for investigation of the Rosin-Rammler function (p. 145). The work involved in making the calculations for the plot can be reduced to a minimum by dividing the arithmetic axis of semi-log paper in proportion to log (log $100/w_r$) and marking each division with the value of w_r instead of the value of the logarithm. As an aid in the preparation of this paper, Geer and Yancey (*A TP 948*) prepared Table 57. The simplest method of

Table 57. Values of log [log (100/w_r)] for various values of w (*after Geer and Yancey*)

w_r	Log [log (100/w_r)]	Difference	w_r	Log [log (100/w_r)]	Difference	w_r	Log [log (100/w_r)]	Difference
2	+0.2302	0.0000	42	−0.4239	0.6541	81	−1.0395	1.2697
4	+0.1455	0.0847	44	−0.4478	0.6780	82	−1.0635	1.2937
6	+0.0871	0.1431	46	−0.4720	0.7022	83	−1.0915	1.3217
8	+0.0402	0.1900	48	−0.4966	0.7268	84	−1.1221	1.3523
10	+0.0000	0.2302	50	−0.5214	0.7516	85	−1.1524	1.3826
12	−0.0358	0.2660	52	−0.5467	0.7769	86	−1.1832	1.4134
14	−0.0686	0.2988	54	−0.5725	0.8027	87	−1.2195	1.4497
16	−0.0991	0.3293	56	−0.5988	0.8290	88	−1.2597	1.4899
18	−0.1280	0.3582	58	−0.6262	0.8564	89	−1.2944	1.5246
20	−0.1555	0.3857	60	−0.6538	0.8840	90	−1.3400	1.5702
22	−0.1821	0.4123	62	−0.6828	0.9130	91	−1.3872	1.6174
24	−0.2077	0.4379	64	−0.7122	0.9424	92	−1.4409	1.6711
26	−0.2328	0.4630	66	−0.7438	0.9740	93	−1.5029	1.7331
28	−0.2574	0.4876	68	−0.7757	1.0059	94	−1.5696	1.7998
30	−0.2817	0.5119	70	−0.8097	1.0399	95	−1.6492	1.8794
32	−0.3055	0.5357	72	−0.8456	1.0758	96	−1.7481	1.9783
34	−0.3293	0.5595	74	−0.8837	1.1139	97	−1.8775	2.1077
36	−0.3529	0.5831	76	−0.9234	1.1536	98	−2.0655	2.2957
38	−0.3764	0.6066	78	−0.9670	1.1972	99	−2.3644	2.5946
40	−0.4002	0.6304	80	−1.0137	1.2439	.....	.....	.....

preparing the paper is to use the values given in the "difference" column (or some constant multiple thereof) to locate and mark points on the axis corresponding to the given values of w_r.

K. Cumulative-probability×log. This plot is made to establish the applicability of the normal-probability distribution law. The curve is straight when the distribution is symmetrical about some particular size.

L. Cumulative passing/$\sqrt{\text{aperture-log}}$×reciprocal. This plot has been used only in determining the applicability of the Roller function (see p. 146).

Frequency curves are plots in which, ordinarily, the number of particles of a given size, or some function thereof, is plotted against the size itself or a function. The simplest form is that of number against size (Fig. 136). Martin, Blyth, and Tongue (*Researches on the theory of fine grinding, Part I, British Portland Cement Research Association, Pamphlet No. 4, 1924*) plot increase in number of particles per unit increase in diameter ($\delta N/\delta D$) against diameter (D). In this curve any ordinate represents the rate of increase in number of particles at the corresponding value of particle diameter; the area between the curve, the X-axis, and any two adjacent ordinates is numerically equal to the number of particles between the corresponding diameters.

Callow method for graphical representation of screen analyses and sizing-assay tests is shown in Figs. 138 and 139 (*92 J 884*). Fig. 138 shows in block 1 a screen analysis of the product of a Dodge

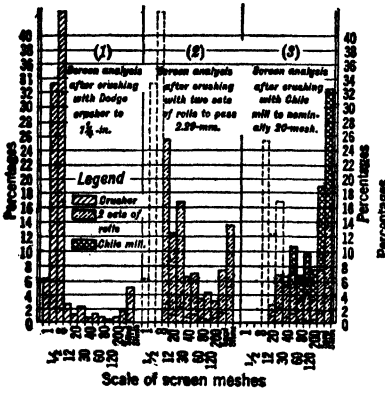

FIG. 138. Diagram of crushing performance.

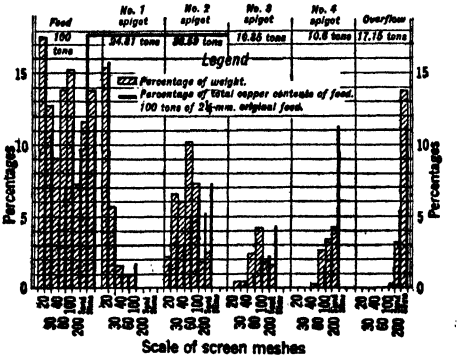

FIG. 139. Diagram of performance of hydraulic classifier.

crusher; in block 2 the product of two sets of rolls taking the material plotted in 1; and 3 shows the product of a Chilean mill fed with the roll discharge. The dotted rectangles in block 2 represent the coarse material that was contained in the roll feed which has been broken, and the dot-hatched rectangles in block 2 represent additions to the line-hatched rectangles of block 1. Similarly the open rectangles in block 3 represent coarse sizes in block 2 that have disappeared, and the cross-hatching represent fines produced from this material. This is an excellent picture, simple to construct. Fig. 139 pictures the products and performance of a hydraulic classifier showing both distribution of sizes and of valuable content. This likewise presents clearly data hard to comprehend from an array of figures. The method is applicable to any sizing-assay test.

GRAVITATIONAL TESTING

Gravitational testing deals with the differences in the motions in fluids of particles of different specific gravities. The theory is discussed and the processes are described in Secs. 8, 9, 10, and 11. Discussion in this section is confined to description of laboratory and/or pilot-scale apparatus and methods of procedure.

20. SINK-FLOAT SEPARATION

Sink-float separation (Sec. 11, Arts. 27, 28) is the simplest and most accurate method of gravitational separation available in the laboratory. It is used (*a*) to separate a material into its various specific-gravity fractions for determination of the amounts and characteristics thereof, (*b*) to separate an ore into its mineral components, (*c*) to isolate certain minerals or groups of minerals in one density range from other groups in another range, and (*d*) to check operating efficiency of concentrating or cleaning processes. When testing is directed toward investigation of mineralogical characteristics, heavy liquids are used; if the object is process testing, heavy suspensions.

Heavy Liquids

A complete series of liquids or solutions ranging in specific gravity from well under 1.0 to about 5.2 may be made or bought; intermediate densities of any desired value may be obtained by diluting or mixing the proper solutions in proper proportions. Sullivan (*TP 381 USBM*) reviews the field of heavy liquids, their properties and preparation in detail. The following is a brief description of the more commonly used liquids.

Bromoform ($CHBr_3$) is a highly mobile colorless liquid boiling at 149.5° C. and solidifying at 6 to 7° C.; its specific gravity is 2.890 at 20° C. referred to water at 4° C., but commercial bromoform rarely attains this density. It is completely miscible in alcohol, ether, and carbon tetrachloride, and quite soluble in benzene, chloroform, petroleum ether, and oils. Its complete miscibility with CCl_4 is utilized to produce solutions with densities ranging between 1.6 and 2.8. Sullivan (Table 58) gives the densities for the binary mixture, using commercial bromoform (sp. gr. = 2.61 at 25° C.) and carbon tetrachloride (sp. gr. = 1.58). Benzene is also used for dilution. RECOVERY of ingredients is accomplished by washing separated grains with the diluent and subjecting washings and used solution to fractional distillation. Fig. 140 gives the temperature coefficient of $CHBr_3$.

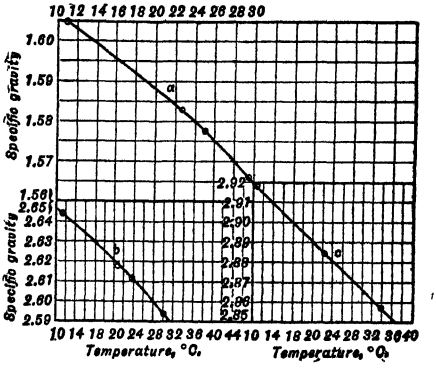

a Carbon tetrachloride.
b Bromoform.
c Acetylene tetrabromide.

FIG. 140. Temperature *vs.* specific gravity (*after Sullivan*).

Table 58. Specific gravity *vs.* composition of bromoform-carbon tetrachloride mixtures

Per cent. $CHBr_3$ (by volume)	100	75	50	25	0
Specific gravity	2.61	2.35	2.09	1.84	1.58

Acetylene tetrabromide ($CHBr_2 \cdot CHBr_2$) is a colorless, mobile liquid at ordinary temperatures; it solidifies at 0.1° C., and boils at 151° C. at 54 mm. of Hg, and at 125° C. at 15 mm. of Hg pressure; at 20° C. it has a specific gravity of 2.964. It is soluble in water to the extent of 65 mg. per 100 cc. at 30° C., infinitely soluble in alcohol, chloroform, and carbon tetrachloride, and fairly soluble in anilin and acetic acid. Mixed with CCl_4, acetylene tetrabromide solutions vary in density from 1.6 to 2.9 as in Table 59. Fig. 140 gives the temperature coefficient of acetylene bromide and carbon tetrachloride in the room-temperature range. Recovery from solutions is accomplished by fractional distillation; C_6H_6 or CCl_4 may be used as wash liquid.

Table 59. Specific gravity *vs.* composition of acetylene-carbon tetrachloride mixtures

Per cent. $CHBr_2 \cdot CHBr_2$ (by volume)	100	75	50	25	0
Specific gravity	2.89	2.58	2.24	1.91	1.58

Stannic bromide ($SnBr_4$) melts at 31° C. to a colorless liquid with a specific gravity of 3.34 at 35° C. In the liquid state it is completely miscible with CCl_4; in the solid state it is soluble in acetone and in cold water (attended by gradual decomposition); it is decomposed immediately by hot water. Mixed with CCl_4, solutions with specific gravities ranging from 1.58 to 3.35 are obtained (see Table 60).

Table 60. Specific gravity *vs.* composition of stannic bromide-carbon tetrachloride solutions

Per cent. $SnBr_4$ (by weight)	100	73	49.5	37.5	0
Specific gravity	3.334	2.58	2.14	1.91	1.58
Temperature, °C	35	22.3	23.0	24	25

Mineral particles may be washed free of $SnBr_4$ by CCl_4, and recovery effected by evaporation or fractional distillation. Metallic sulphides when dry are unaffected by $SnBr_4$ but when wet are attacked; stibnite is acted upon slowly.

Preparation. Sullivan gives the following method: Place powdered or granular tin in a distilling flask fitted with a reflux condenser. Fit a two-hole rubber stopper in the top of the condenser. Pass the stem of a dropping tube filled with bromine through one hole and the connecting tube of a $CaCl_2$ drier through the other. Add bromine drop by drop until reaction is complete; then drive off excess bromine by distillation, and finally distil the bromide. The distillate crystallizes into snow-white crystals having a m.p. of 31° C. and a b.p. of 203° C.

Antimony tribromide ($SbBr_3$) is a white crystalline compound melting at 96.6° C., boiling at 280° C. with a gravity of 4.148 at 22° C. It is decomposed by water; is soluble in absolute alcohol, acetone, bromoform, carbon tetrachloride, and is infinitely miscible in the liquid state with liquid stannic bro-

mide, giving with the latter solutions ranging in gravity from 3.11 to 3.6 (see Table 61). Antimony bromide-stannic bromide solutions are RECOVERED by washing with alcohol, acetone, or CCl_4, and separating from the solvent by fractional distillation.

Table 61. Specific gravity *vs.* composition of antimony tribromide-stannic bromide mixtures

Gravimetric % $SbBr_3$	100	72.2	50.8	24.8	0
Specific gravity	3.64	3.45	3.38	3.26	3.11
Temperature, °C	108	108	107	108	108
Freezing point, °C	94.2	82	77	71	30

Preparation of $SbBr_3$ parallels that given for $SnBr_4$. Caution should be exercised in addition of bromine to Sb, as the reaction is very vigorous and is accompanied by evolution of heat and light.

Thallium formate (TlCOOH), sp. gr. 4.95 at 105° C., m.p. 94° C., is prepared by treating Tl_2CO_3 with $Ba(COOH)_2$. To prepare thallium carbonate Clerici (*16 Rend. Accad. Lincei 187; 31 ibid. 116;* also Vassar, *10 Am. Mineral. 123*) placed thallium turnings in a shallow dish with not enough water to cover them. After 24 hr. more water is added, heat applied, and the solution filtered and allowed to crystallize. This procedure is repeated until the metal is exhausted. Water solutions of this salt give solutions with gravities ranging from 4.95 to 1.0 (see Table 62). RECOVERY is effected by washing with water, whence the TlCOOH may be recovered by evaporation.

Table 62. Specific gravity *vs.* composition of thallium formate solutions

Gravimetric % TlCOOH	100	95	90	85	80	75
Specific gravity	4.95	4.19	3.72	3.39	3.09	2.86
Temperature, °C	105	60	42	25	25	25
Melting point, °C	94	54	31	22	.....	.....

Thallium formate-malonate. A mixture of thallium formate and thallium malonate was found by Clerici to give higher specific gravities than the formate alone at the same temperature. The best results were obtained with a mixture of 10 parts formate, 10 parts malonate, and 1 part water; this mixture is odorless, colorless and extremely fluid and can be recovered by evaporation. Seven grams each of formate and malonate completely dissolved in 1 cc. of cold water; 10 grams of each leaves some undissolved solid and the filtrate has a sp. gr. of 4.067 at 12° C. Formate alone gives this sp. gr. only at 45° C. and the malonate only at 60° C. By further additions of formate-malonate a sp. gr. of 4.40 is reached at 35° C. and of 4.65 at 50° C.

Antimony trichloride solution of a eutectic $HgCl_2$-HgI_2 mixture gives sp. gr. ranging from 3.44 at 121° C. for a 1 : 1 solution, through 4.05 at 145° C. for a 3 : 1 solution of $SbCl_3$: $HgCl_2$-HgI_2, to 4.55 at 135° C. for a solution containing 87.5% HgI_2-$HgCl_2$. All three components are soluble in anilin, which may be used to wash particles. This solution decomposes sulphides, hence is limited in applicability to nonsulphides.

Procedure in testing with heavy liquids consists essentially in immersing the powdered mixture in a suitable solution, diluting until the desired constituent or constituents sink, separating the floating from the sunken portion, separating the solution from each portion, and washing the solid until free of solution. It is preferable to have mineral particles dry, otherwise dilution of the heavy liquid may occur; if the heavy solution is decomposed by water, *e.g.*, $SbBr_3 + CCl_4$, the particles must be dry. Drying is best accomplished by washing with acetone. When the heavy liquid must be used at higher than room temperatures a water or steam bath is practical for temperatures below 100° C. and an oil bath for higher temperatures. *Johannsen* describes a large number of separating vessels, chiefly applicable to close separations of a number of constituents. Tomlinson (*52 A 852*) described a method of mineralogical analysis of sand that is adaptable to most ore-dressing work.

Preparation. Dry. Size carefully and record weights of grades. Apart from the information thus obtained, sized products are more accurately separated in heavy solutions than unsized.

Separation, especially of <48-m. material, is most readily made in a Harada or similar tube, which is a special separatory funnel (see *Johannsen*), but it may be made satisfactorily in beakers. Use a beaker with capacity about six times the volume of the lot of sand to be separated, dry it thoroughly, add the solution (two volumes of solution of proper density to one of sand), stir in the sand slowly, allow it to stratify, skim the bulk of the float, then pour off some of the liquid with the balance of the floating material. Some floating sand will usually stick to the beaker in pouring off. If so, push it away on the sides of the beaker with a glass rod until sufficient clear space is available to pour out the settled solid with the balance of the liquid without contamination. Wash the separates repeatedly with water or other suitable diluent to remove and save solution. If several grades are to be made, it may be well to separate first at an intermediate density and rework the rough grades at higher and lower densities respectively, making sure that they are thoroughly dry before retreatment.

Separation of < 150-m. material is effected by centrifuging to increase sedimentation rate. The technique consists in charging the centrifuge cups with solution and sample and centrifuging for some predetermined time. The float together with solution is removed by pipetting to within some fixed distance from the sediment. Float and sink may be cleaned and recleaned by repetition of this operation, depending upon the accuracy desired, microscopic observations being used for check purposes

Sink-float test for coal. Coal analysis is the most important application of heavy-liquid testing. Any of the solutions and the method described may be used, but the volume of sample is usually so large and the coal so light that special methods and cheaper solutions are normally employed. The method is particularly suitable because with any given coal the ash content has a direct and substantially constant relation to the specific gravity, so that once an allowable ash content for a coal has been set, and the specific gravity of the highest-ash particle therein has been determined, a solution of that specific gravity will float good coal and everything that sinks will be of higher ash content than the permissible limit. The specific gravities of the usual impurities associated with coal compared with those of coal are shown in Table 63. It is apparent that a heavy solution of specific gravity between 1.50 and 1.65 would put all of the distinct impurities and some of the bone coal into the sink fraction. With different coals the ash content and the specific gravity have distinctly different relations, as is shown in Table 64; hence the necessity to establish the ash-specific gravity relation and the critical specific gravity for each coal.

Table 63. Specific gravities of common ingredients of raw bituminous coal (*after Drakeley*)

Material	Specific gravity	
	Range	Average
Coal	1.17 to 1.35	1.30
Bone	1.35 to 1.65	1.50
Carboniferous shale	1.65 to 2.15	1.85
Shale	2.15 to 2.55	2.40
Coal or shale with pyrite	2.55 to 4.80	3.65
Pyrite	4.80 to 5.20	5.00
Quartz		2.60
Calcite		2.71+
Feldspar		2.40

Solutions. The usual heavy solution for coal testing is a water solution of zinc chloride. This gives a maximum density of about 1.80 at ordinary temperature. Calcium chloride is sometimes used. Sinnat and Mitton (*67 IME 494*) used mixtures of carbon tetrachloride (sp. gr. 1.582 at 21° C.) and toluene (sp. gr. 0.8708). For sizes finer than 20-m. McMillen and Bird (*Bul 28 UW Ser. 61*) used a mixture of carbon tetrachloride with benzene or bromoform, according to whether densities below or above 1.58 were desired. Willis (Du Pont *PC*) used mixtures of acetylene tetrabromide and pentachlorethane for gravities above 1.678 and a solution of the latter in a light petroleum distillate for lower specific gravities.

In changing solution strengths, the volume x of old liquid to be withdrawn and new solution to be added may be calculated by the equation, $x = (O - N)V/(O - A)$, where V is the volume of testing solution before and after the change in density, and O, N, and A are the specific gravities of the old, new, and added solutions respectively. If the testing tank is of constant cross-section, x and V may be expressed in units of depth of liquid in the tank, if there is no appreciable amount of solid material in the tank.

Table 64. Relation between specific gravity and ash content of various Vancouver coals (*after Garman*)

Order of increasing ash *a*	Clean coal		Refuse	
	Specific gravity	Ash, %	Specific gravity	Ash, %
1	1.30	3.86	1.76	42.22
2	1.25	3.90	1.57	44.37
3	1.32	7.12	1.91	57.13
4	1.28	7.50	1.75	62.25
5	1.24	7.63	2.00	68.50
6	1.60	8.22	1.77	75.34
7	1.30	9.00	2.25	84.55
8	1.31	15.57	2.60	88.38
9	1.38	17.55	.....	.....
10	1.43	26.25	.....	.....

a There is no necessary relation between the clean coal and the refuse in any given horizontal line; they may not be from the same coal.

Size of sample depends on the size of the particles. McMillen and Bird (*loc. cit.*) recommend 500 lb. for egg-size coal (3~1 1/2-in.); 250 lb. for nut-size (1 1/2~3/4-in.); 125 lb. for pea (3/4~3/8-in.); 50 lb. for buckwheat (3/8~3/16-in.); 25 lb. for birdseye (3/16-in.~20-m.); and 0.5 lb. for <20-m.

Apparatus. The essential elements of the apparatus for making tests conveniently are a container large enough to hold the sample and means for removing the sink and float fractions separately.

Fig. 141 represents an apparatus for coarse sizes developed by the U. S. Bureau of Mines. It consists essentially of a wood or zinc-lined tank *a* and two perforated-bottom containers for removing the separated fractions. The sink pan *b* rests on the bottom of the tank and has a permanent perforated bottom and handles at the end. The float rim *c* rests on the upper edge of the sink pan. As set into place for a test, it is merely a 4-sided rim extending the sides of the sink pan above the surface of the liquid in the tank. After the charge has separated into sink and float fractions, a flexible screen *d* is slid down through and along the groove (*e, e, e*) in the float rim until it forms a perforated divider between the fractions and a support on which to lift out the float fraction when the float rim is removed. Details of construction are shown in the figure.

Procedure, especially when the feed contains impurities that disintegrate in water, is to start with the heaviest solution (1.70 sp. gr. for bituminous coals and 1.80 for anthracite will float all material of any value). The sample is shoveled into the assembled apparatus, float being skimmed as necessary to maintain the layer of float at not more than three particles deep. It is necessary to make certain, before any material is skimmed, that the specific gravity of the solution is exactly that or less than

that at which separation is intended. Float should be stirred before skimming to prevent removal of entangled sink material. When all of the sample is in, the specific gravity of the solution should be brought to exactly the desired figure (using an accurate hydrometer for testing), the sink should be stirred to free any entangled float, and then the screen inserted into the float rim (Fig. 141) and the latter lifted out and placed on a suitable draining board arranged to collect drippings. The sink should

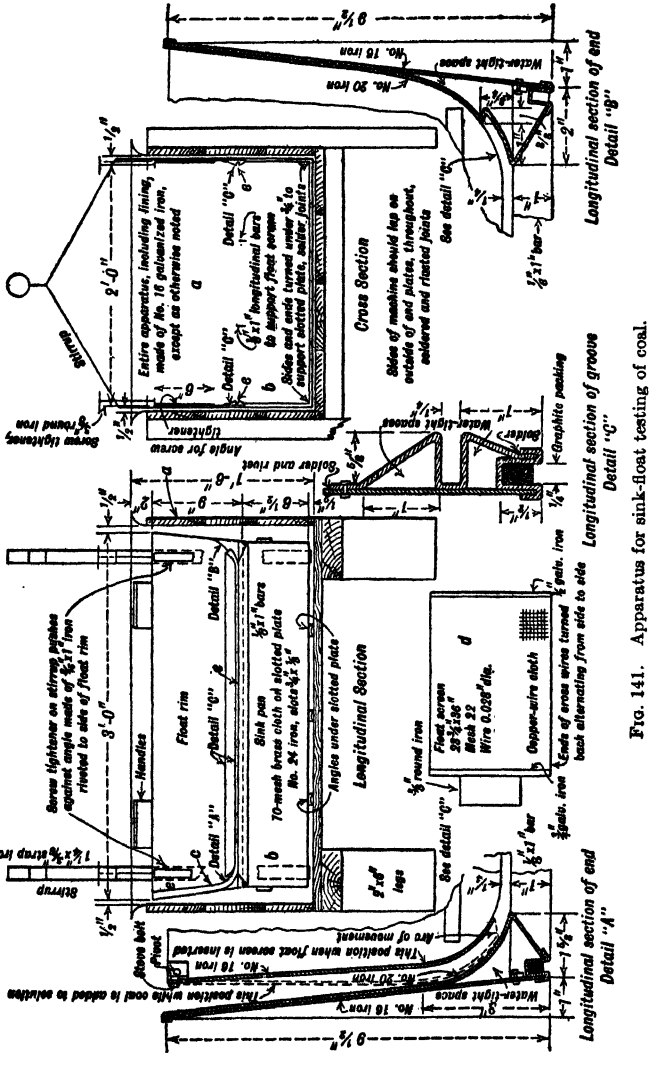

then be removed, drained, washed free of heavy liquid, and dried. Next reassemble the apparatus, dilute the solution to the next lower separating density, and retreat the preceding float. Repeat until the desired number of cuts has been made.

Fine material. For material finer than 20-m. a two-liter bottle makes a good separating container and carbon tetrachloride with benzene or bromoform good heavy solutions. Float material may be drawn into a two-liter vacuum flask by means of a glass tube. Separating solutions must be maintained at constant temperature in order to maintain constant specific gravity. The sample should be 200 gm. of air-dried (105° C.) coal which has been thoroughly wetted before separation. Twenty-four hours may be required for complete separation. The specific gravity of the solution must not be adjusted during a given separation.

TESTS OF MACHINES AND PROCESSES

The ultimate purpose of testing in commercial mineral-dressing operation, whether custom or plant, is usually one of the following: (*a*) to devise a flowsheet for the treatment of a particular crude; (*b*) to improve the operation of a part of an existing flowsheet; (*c*) to investigate the behavior of a particular machine or process, either on a given material or on materials generally; (*d*) to instal and maintain controls on particular machines and/or on an operation as a whole; (*e*) to devise new machines and processes, or novel modifications of old ones. In noncommercial laboratories, investigation is usually directed toward explanation.

21. TESTING FOR A FLOWSHEET

The essential steps in testing for a flowsheet are (1) determination of the nature of the crude, particularly as regards the kind, quantity, and distribution of valuable constituents, and (2) subjecting it to tests by methods which experience indicates give the best promise of optimum beneficiation at minimum operating expense.

The successive steps in an ore test vary with the ore, the extent and thoroughness of the campaign, and with the individual predilections of the investigator, but in general they should always comprise: (*a*) accreditation of the test sample; (*b*) preliminary tests directed toward the determination of the mineralogical composition and structure of the ore; (*c*) process tests on suitably prepared parts of the sample.

Accreditation of the sample should be the first step in every ore-testing campaign. The investigator should have some personal knowledge of the extent to which the sample is representative of the deposit from which it purports to come; failing this, responsibility for its character should be definitely placed, in writing, and subsequent reports of tests, and recommendations based thereon, should be made subject to such accreditation in clear and unmistakable language.

Weight of sample. Preliminary tests can be made using not more than a few pounds of ore—an amount sufficient for microscopic tests, assays, and, if indicated, two or three panning and flotation tests or the like. A sample weighing from 50 to 1,000 lb. should be available if any extensive process testing is contemplated; more is necessary for gravity concentration tests than for flotation or simple cyanidation.

Sampling methods vary with the character of the ore. Accurate sampling is necessary both in taking the original test batch from the deposit and in taking lots from the test batch for the various laboratory tests. For principles and methods of sampling deposits of crude see *Peele;* for methods of sampling batches see Arts. 2 and 3.

Preliminary testing. The first step, assuming that the investigator starts from scratch on a sample of interesting-looking but unknown ingredients, is determination of mineralogical composition. This is best done by an expert mineralogist, but may be done, with less expedition and assurance, in the mineral-dressing laboratory. If the general character of the valuable constituent or constituents is known, investigation should start with an assay of a representative sample. This assay, taken in connection with the location of the property and available data on extraction costs, markets, etc., will determine whether further work is justified.

Subsequent steps depend upon the character of the ore. If this is an industrial (nonmetallic) mineral, the size of the marketable product may be a controlling factor, in which case concentration, if it is to be practiced, must be subordinated to the limitations thus imposed. With industrial minerals not subject to size limitations and with metalliferous ores, the next step is to determine the size distribution of the valuable mineral. Macroscopic study of the sample and microscopic examination of selected lumps are the usual preliminary methods for such determination. If these studies indicate that valuable mineral or gangue may probably be freed at sizes coarser than 10-m., this indication is usually checked and roughly quantified by a sizing-sorting-assay test (see p. 157). If fine grinding is required to free the values, the sizing-sorting-assay test may be omitted, and preparation for detailed testing may properly start as soon as this fact is determined.

Preparation for process testing means essentially performance of the steps necessary to obtain a representative sample for the test. The sample must be representative, both as to composition and particle-size distribution, of the material that might be expected to go to the particular machine or process in a mill built to treat the ore in question. Such a sample may be secured by subjecting the original material or a sample thereof to a sequence of steps similar or equivalent to those to be expected to be used in such a mill prior to the machine or process under consideration. This requires that a qualitative

flowsheet of such a mill be drawn up and that a test flowsheet, substituting suitable laboratory equivalents for the proposed mill steps, be prepared and followed. If fine grinding is indicated, the preliminary preparation simply involves crushing by any means (not involving the introduction of too much metallic iron) to a maximum size suitable for grinding to final size in the laboratory ball mill. If, on the other hand, the prevailing mineral aggregation is coarse enough to justify a trial of gravity methods of concentration or if the process under test is a gravity process, it may be desirable to carry on the crushing in such a way as to minimize production of fines.

Time, as a factor in chemical reaction, is an essential element in some flotation operations, in that oxidation of metallic sulphides is a necessary preliminary for reaction with chemical collectors. But heavy oxidation results in large consumption of collector and may cause activation of the gangue minerals. Consequently sulphide ores should never be ground to flotation size until immediately prior to the flotation operation; they should not be crushed to a size that will free much sulphide mineral and then allowed to stand for long periods before use. If they are particularly subject to oxidation, as, for example, highly pyritic ores frequently are, they may be expected to oxidize sufficiently even as, say, <2-in. crusher product, in standing around for periods of several months, to cause difficulties that would not ordinarily be met with in a mill treating the same ore freshly broken in the mine. Conversely, if it is practice at a particular mine to let broken ore lie in the mine for weeks or months before milling it (large shrinkage stopes, caving, etc.), the ore tested should not be freshly broken, unless it has been demonstrated that no sensible change occurs during the broken-storage period.

Samples for flotation testing should never be wetted and dried before treatment, and pulp samples taken from an operating mill should be floated immediately. Likewise the sample cutter and container should not be of materials which could introduce into the sample ions unusual to the circuit.

Process ranges. Testing should start with those methods which practice teaches are most likely to be applicable; processes commercially unproved should be tried only after tested methods prove unfeasible, and should never be recommended for adoption unless ample funds are available for process development. Flotation and/or gravity concentration will treat the great majority of mineral crudes successfully; magnetic separation is pre-eminent in a limited field; beyond these is a short miscellaneous list, *e.g.*, electrostatic separation, differential grinding, decrepitation, and thermochemical conditioning to render certain minerals amenable to one or another of the foregoing standard treatment processes, each member of which has a record of scattered and relatively unimportant commercial applications.

Chemical methods for the treatment of crudes are manifold in detail but few in principle. All depend upon preferential chemical response of the constituents of the crude mineral, of such nature as to change the desired constituent into a phase different from that in which the residue exists; whereupon separation of the phases is effected. The principal classes of such process are: water leaches, chemical leaches, and chemical transformation followed by leaching, in all of which the desired ingredient in a liquid phase is separated from a residue which may be either liquid or solid. Other classes are roasting, calcination, sublimation, distillation (wherein one ingredient is vaporized and then led away from the residue which is liquid or solid), liquation (wherein one ingredient is liquefied and led away from a solid residue), and smelting (wherein the entire mass is changed into a mixture of immiscible liquids by heat and chemical action, and these, after stratification, are drawn off separately). Subsequent refining of the impure separates thus obtained involves further applications of the same types of method; plus precipitation, in which a selected part of a mixed fluid phase is rendered solid (or immiscible liquid) and separated by sedimentation, filtration, or the like.

Gravity concentration is most widely applicable. It is effective in the absence of slimes at sizes from 325-m. to 20-m., and, irrespective of the presence of slimes, at all sizes from 20-m. to the coarsest at which mineral is free, provided only in both cases that the concentration criterion is large enough (Sec. 11, Art. 1). If the concentration criterion is less than 1.5, close and careful work is necessary, if standard methods are to be used, and normal standards for cleanliness of concentrate and for recovery must be abandoned.

Sink-float separation is gravity concentration in a fluid or semifluid heavier than water. Use of such a liquid has the effect of increasing the concentration criterion of the minerals to be separated; in the limiting case, which is that usually practiced, the criterion becomes infinity when the density of the medium becomes equal to or less than that of the lighter mineral. Semifluids made by suspending fine solids in water by agitation (Chance and MBI processes, Sec. 11, Arts. 28, 29) have had considerable use; heavy liquids, organic and aqueous salt solutions, have not been used commercially. The method is readily applicable to sizes from about 3/8-in. up to head size; sizes down to 10- or 14-m. are treatable in some cases; finer sizes will not, at present, separate satisfactorily.

Air separation, as a concentrating means, is a form of gravity concentration applicable to closely sized granular materials, preferably of relatively low specific gravity, such as coal and slate, which are treated commercially in sizes up to 2 in. It will make some separation of gold from gravels. It has been used for some very close separations, *e.g.*, of garnet from associated minerals, and is reported by sellers of dry-concentration apparatus to have wide application in such service, but operating data

are scarce for separations other than coal-slate. In general, it is used only when the cost of water is prohibitive. (See Sec. 11, Art. 35.)

Washing, in one of its various forms, is applicable whenever great differences in size or shape exist between the minerals to be separated; or when there is a workable concentration criterion and high tailing can be tolerated. Thus washing on screens is commonly used to separate clay and fine sand from coarse material such as gravel, pebble phosphate, shell, crushed limestone for shaft kilns, etc.; log washers are used in similar service when more forcible disintegration is required; and washing in classifiers and the like is used for fines rejected by coarse-washing and scrubbing operations (see Sec. 10).

Flotation, in the usual froth-flotation sense, is applicable at 35-m. as a maximum, and not highly efficient at sizes coarser than 65-m. As a rough scalping process for light minerals, such as coal, froth flotation has been operated on <10-m. feeds; and a modification involving preliminary desliming and the levitation of clotted air-mineral aggregates will operate on certain minerals of gravities between 2.5 and 3 (*e.g.*, phosphates) in mixed sands up to 6- or even 4-m.

It is probable that any mineral which contains a distinctive element or radical, capable of being ionized in aqueous solution at the mineral-particle surface, can be floated away from any other mineral or group of minerals not containing the same characteristic constituent. But it must be recognized, as a practical matter, that unless the mineral that it is desired to float falls within one of the classes for which suitable conditioning agents and collectors are presently known, finding a flotation method probably involves long and arduous research and is not a simple ore-testing problem.

The minerals of known amenability to flotation collection at present are: native elements such as sulphur, gold, graphite, platinum, and copper; simple salts, such as the metalliferous sulphides, tellurides, and the like, the halogen salts of heavy metals, alkali earths, and alkalis, the carbonates, sulphates, and phosphates of the heavy metals and alkali earths, and amphoteric salts of heavy-metal and alkali-earth bases, such as molybdates, tungstates, and vanadates; quartz and some of the simple salt-type silicates; and the solid carbonaceous minerals like gilsonite, anthracite, and bituminous coal. On the other hand the metallic oxides, *e.g.*, hematite, cuprite, cassiterite, bauxite, magnetite, ilmenite, rutile, corundum, etc., and the oxide solid-solution type of silicate mineral, have thus far resisted successful collection in plant-scale operations.

Magnetic separation is supremely applicable to the separation of magnetite, franklinite and ilmenite, at all sizes at which these minerals are freed, from fine sands up to sizes where hand sorting becomes more profitable. It may also be used to separate the minerals of the weakly magnetic group listed in Table 1, Sec. 13, and high-iron garnets from the nonmagnetic group, but for such treatment the feed must be finely granular and dry, and expensive high-intensity low-capacity machines must be employed.

Miscellaneous methods, previously mentioned, are specials. Until they are better established commercially, they should not be tested on an ore unless all standard methods have failed, the economic reward for success is great, highly intelligent operation is assured, and the client can stand probable loss. The one exception to these restrictions is electrostatic separation, on which a great deal of experimental and small-size commercial work has been done, and for which some reasonably dependable plant performances are probably available.

Process testing. If microscopic and chemical tests on the crude indicate the probable applicability of standard methods of treatment other than flotation (lack of applicability of other methods is normally indicated by dissemination of valuable mineral in a size too fine for treatment by these methods), the next step is performance of some type of sizing-sorting-assay test.

Sizing-sorting-assay test is directed toward a rapid answer to the question of the sizes at which concentrate and/or tailing can be made in commercial quantities. It comprises, as the name implies, a preliminary separation by size, followed by sorting of the individual sizes on the basis of valuable-mineral content.

Usual procedure is to make first a sizing test of a sample which has been broken to approximately the size at which macroscopic examination indicates that clean mineral or clean tailing can be made, and to assay each such size. This gives a valuable preliminary picture of the material (see cols. 3 to 7, Table 65). Such a test is called a SIZING-ASSAY TEST. Each of the sizes, or groups of adjacent sizes, is next sorted by appropriate means into concentrate, middling, and tailing, and each of these products is weighed and assayed (see cols. 8 to 19, Table 65). Hand picking can be used for separation down to the oversize on a 1-mm. screen, but if concentration criteria permit, sink-float separation will be quicker; if magnetic separation is applicable, it should be used. Panning is useful on the finer sizes, or, if the bulk is large enough, and flotation promising, they may be combined and such a test be made.

Interpretation. Neglecting the middling, or, what amounts to the equivalent, assuming that if it were reground and put back into circuit, the grades of concentrate and tailing would not be affected, the recovery indicated in the test of Table 65 is 96%. It is improbable, however, that middling assaying 14.42% Pb would yield as low a tailing as that yielded by the original ore, assaying 5.27% Pb, especially since in concentrating the original ore a relatively high grade middling was made. If the assumption is made that the concentrate obtained by retreating middling separately would average 65% Pb and the tailing 0.40%, the recovery on middling would be 97.8 %. Such an assumption was

justified in this test on the grounds that microscopic examination of the middling showed that substantially all mineral would be free at 100-m., that the concentrate obtained by floating 14% feed was of somewhat higher grade than that from 5% feed, and that the assays of flotation tailings from the two feeds would be roughly in proportion to the feed assays. Such middling retreatment would add 3.710 tons of concentrate containing 2.4095 tons of lead and 13.386 tons of tailing containing 0.0535 ton of lead. If any doubt exists as to the behavior of the middling on retreatment, it should be ground and treated.

In general the test would not be performed in all of the detail indicated by Table 65; >3-m. would have been hand-picked, 4~8-m. and 10~14-m. would have been hand-jigged or separated by sink-float, 20~100-m. would probably have been tabled (or panned on account of the small bulk), and <100-m. floated.

Table 65. Sizing-sorting-assay test of < 10-mm. lead ore

Line number	Screen, mesh	Feed					Concentrate			
		Weight, gm.	Tons per 100 tons	Assay, % Pb	Tons Pb per 100 tons of feed	Per cent of total lead content	Weight, gm.	Tons per 100 tons of feed	Assay, % Pb	Tons Pb per 100 tons of feed
(1)	(2)	(3)	(4)	(5)	(6)	(7)	(8)	(9)	(10)	(11)
1	3	55.6	2.02	3.14	0.0634	1.20	.....	.....	.....	.....
2	4	213.0	7.73	3.41	0.2635	5.00	0.44	0.012	86.8	0.0104
3	6	315.5	11.44	3.66	0.4190	7.96	1.09	0.030	86.7	0.0260
4	8	465.5	16.90	3.85	0.6510	12.36	4.80	0.132	80.3	0.1059
5	10	442.0	16.09	4.73	0.7615	14.46	5.93	0.163	82.0	0.1336
6	14	248.5	9.04	4.75	0.4295	8.15	4.33	0.119	81.6	0.0972
7	20	85.0	3.08	4.97	0.1531	2.90	2.11	0.058	82.4	0.0476
8	28	102.4	3.72	6.10	0.2268	4.30	5.02	0.138	81.9	0.1127
9	35	84.6	3.07	7.08	0.2175	4.12	6.55	0.180	81.4	0.1469
10	48	80.7	2.93	8.02	0.2352	4.46	8.55	0.235	79.7	0.1874
11	65	61.2	2.22	9.06	0.2012	3.81	8.47	0.233	76.2	0.1775
12	100	80.0	2.90	10.35	0.3003	5.68	13.73	0.378	74.5	0.2815
13	150	73.9	2.68	9.89	0.2648	5.02	}			
14	200	55.4	2.01	8.00	0.1608	3.04	57.80	2.100	63.2	1.3254
15	<200	390.0	14.17	6.53	0.9250	17.54	}			
16	Total	2,753.3	100.00	5.27	5.2726	100.00	118.82	3.778	70.1	2.6521
		Distributed middling.....			.....	.....	.....	3.710	65.0 *a*	2.4095
		Calculated totals			.....	.....	.....	7.488	67.6	5.0616

Line number	Screen, mesh	Middling				Tailing			
		Weight, gm.	Tons per 100 tons of feed	Assay, % Pb	Tons Pb per 100 tons of feed	Weight, gm.	Tons per 100 tons of feed	Assay, % Pb	Tons Pb per 100 tons of feed
		(12)	(13)	(14)	(15)	(16)	(17)	(18)	(19)
1	3	19.3	0.702	8.62	0.0605	36.3	1.318	0.22	0.0029
2	4	59.4	2.164	11.25	0.2434	153.2	5.554	0.18	0.0100
3	6	81.3	2.959	12.60	0.3726	233.1	8.451	0.24	0.0203
4	8	104.8	3.814	13.70	0.5227	355.9	12.954	0.17	0.0220
5	10	91.7	3.329	18.10	0.6025	344.4	12.598	0.20	0.0252
6	14	46.8	1.701	18.59	0.3163	197.4	7.220	0.22	0.0159
7	20	14.1	0.513	18.86	0.0967	68.8	2.509	0.35	0.0088
8	28	15.7	0.571	18.47	0.1055	81.7	3.011	0.29	0.0087
9	35	11.8	0.430	15.02	0.0646	66.2	2.460	0.24	0.0059
10	48	10.2	0.371	11.36	0.0421	61.9	2.324	0.23	0.0054
11	65	6.9	0.252	8.19	0.0206	45.8	1.635	0.19	0.0031
12	100	8.0	0.290	5.34	0.0155	58.3	2.332	0.14	0.0033
13	150	}							
14	200	}	.....	.....	.....	461.5	16.760	0.15	0.0252
15	<200	}							
16	Total	470.0	17.096	14.42	2.4630	2,164.5	79.126	0.20	0.1567
		Distributed middling.....			.....	.....	13.386	0.40 *a*	0.0535
		Calculated totals.....			.....	.....	92.512	0.227	0.2102

a Assumed.

From weights: Recovery $= \frac{5.0616}{5.2718} = 96.0$ Ratio of concentration $= \frac{100}{7.488} = 13.3$

From formula: Recovery $= \frac{67.6(5.27-0.227)}{5.27(67.6-0.227)} = 96.0$ Ratio of concentration $= \frac{67.6-0.227}{5.27-0.227} = 13.4$

Preliminary flowsheet. A sizing-sorting-assay test is a basis for a preliminary flowsheet. The test presented in Table 65 would indicate a flowsheet in which the material should be crushed through 3-m., screened on 10-m., the oversize sent to jigs making finished concentrate and tailing, and middling for recrushing; undersize deslimed at 100-m. and the sand tabled to make finished concentrate and, possibly, tailing, with a middling for recrushing; slimes to flotation, making finished concentrate and tailing. On account of the high grade of the primary middling, it would probably be best to grind at least the coarser part lightly to scalp out more concentrate, and even then to grind combined middling separately and float it separately, so that it could be subjected to the relatively slow treatment necessary in making high recovery from rich feed.

Table 65 indicates the relative tonnages that would go to different machines on first pass. The amount that the middling would add would depend on how finely it was ground, whether it was treated separately or thrown back into circuit, and how much recirculation was necessary. These questions can be answered approximately from experience. They cannot be answered definitely without pilot tests on a continuous, as opposed to a batch, basis. This is properly the next step in testing for a flowsheet. It requires a laboratory with pilot-size apparatus, an arrangement sufficiently flexible to permit considerable switching of flow, and apparatus for storage and transport that is specially designed for the small quantities flowing. Otherwise time factors are completely different from those to be expected in a mill, and similitude is lost.

Washability is coal-cleaning jargon to designate amenability of a coal to gravity concentration. A simple washability test on a coal comprises: (*a*) a sizing test on the raw coal; (*b*) sorting each sized product into grades or fractions of different specific gravities from 1.25 or 1.30 to 1.80 or 2.00 by sink-float methods (Art. 20); (*c*) analyzing the grades for ash and sulphur; (*d*) presenting the results of the tests in tabular and in specific graphical forms. The simple washability test is sometimes amplified by so-called SLOTTED-SCREEN TESTS, designed to separate flaky high-ash material from rounded or roughly cubical particles in a given round-hole or square-mesh screen product, either before or after sink-float sorting; and by CRUSHING TESTS, which involve crushing a given sized product and making sizing and sink-float tests, with supplementary analyses of the products,[1] for the purpose of determining the possibilities of enrichment attainable by crushing and concentrating such material. Correct interpretation of the tabular and graphical records of washability tests supplies a basis for reasonably accurate prediction of the behavior of a raw coal or of a sized fraction thereof on gravity-concentration machines. Washability results, carefully performed, constitute a 100% reference point for efficiency calculations.

Similar tests are applicable to ores.

Procedure. SAMPLE for a simple washability test on <3-in. coal should weigh at least 1,000 lb., if analyses on sizes are to be computed from the analyses on the gravity fractions thereof; if independent analyses on the whole size fractions are to be made, the sample weight should be at least 2,000 lb. If crushing tests are to be made additionally, the original sample should weigh at least 4,000 to 5,000 lb., if for no other reason than that such an elaborate program should not be undertaken without an adequate supply of representative material. SIZING should be on a standard screen series corresponding to the practice for the district in which the coal originates. The quantity to be sized should be sufficient to give sized fractions large enough for reliable sink-float separations and for any additional or supplementary tests that may be contemplated. SINK-FLOAT TESTS on the different grades should be made with a sufficient number of sp.-gr. steps to give the desired information. Normally a gravity interval of 0.05, 0.075, or 0.10 in the lower range and 0.15 to 0.20 in the higher ranges is sufficient. For details of testing see Art. 20.

Tabular arrangement of test data is conveniently made as shown in Table 66, which comprises experimental and calculated data from a test by Bird, Gandrud, and Nelson (*3012 RI 17*).

Columns 3 and 5 of Table 66 are experimental figures. Column 4 is a simple percentage equivalent of column 3. Column 6 is the usual cumulation of column 4. Column 7 is the weighted percentage of ash corresponding to the cumulative weight percentages of column 6, *e.g.*, for the 1.30~1.38 gravity fraction of the 1 1/2~3/4-in. size fraction: $0.1 \times 4.0 + 5.3 \times 5.0 + 61.0 \times 9.6 = 612.5$, which, divided by 66.4, equals 9.2.

The block described "Raw coal, calculated" is obtained as follows: The figures in column 4 are determined by successive applications of the formula $x = \Sigma ab/\Sigma a$, where a is the weight-per cent. of the size from the last line of each block of column 1 and b is the weight-per cent. of the corresponding gravity fraction from column 4. Thus for the 1.25~1.30 fraction,

$$x = \frac{4.2 \times 11.9 + 5.3 \times 16.9 + \cdots + 34.5 \times 2.0}{11.9 + 16.9 + \cdots + 2.0} = \frac{2,725}{100} = 27.2$$

Column 5 is calculated as the weighted average of all of the corresponding gravity fractions of the preceding blocks of the table, *i.e.*, $x = \Sigma abc/\Sigma ab$, wherein a and b are as defined in the preceding sentence, and c is the ash % (col. 5) for the corresponding gravity fraction. Thus for the 1.25~1.30 fraction

$$x = \frac{4.2 \times 11.9 \times 5.2 + 5.3 \times 16.9 \times 5.0 + \cdots + 34.5 \times 2.0 \times 2.9}{4.2 \times 11.9 + 5.3 \times 16.9 + \cdots + 34.5 \times 2.0} = \frac{13,379}{2,725} = 4.9$$

Columns 6 and 7 are calculated from columns 4 and 5 as previously explained.

The remaining blocks of the table, calculated by the methods used for the raw-coal block, illustrate a method for estimating behavior of any desired composited fraction.

Table 66. Washability test on run-of-mine coal, crushed to pass a 3-in. round-hole screen *b*

1	2	3	4	5	6	7
Fraction	Specific gravity	Weight, lb.	Weight, %	Ash, % *a*	Cumul. weight, %	Cumul. ash, % *a*
3~2-in.	<1.25	0.0	0.0	.....	0.0	.....
Head ash, % not determined *a*	1.25~1.30	38.5	4.2	5.2	4.2	5.2
Weight: lb., 940.0	1.30~1.38	467.5	50.6	9.8	54.8	9.4
%, 11.9	1.38~1.50	83.3	9.0	20.0	63.8	10.9
	1.50~1.70	71.3	7.7	34.8	71.5	13.5
	1.70~1.90	37.0	4.0	49.8	75.5	15.4
	1.90~2.20	45.8	5.0	63.7	80.5	18.4
	>2.20	180.0	19.5	88.8	100.0	32.1
		923.4				
1 1/2~3/4-in.	<1.25	0.3	0.1	4.0	0.1	4.0
Head ash, 21.7%	1.25~1.30	19.5	5.3	5.0	5.4	5.0
Weight: lb., 1,335.9	1.30~1.38	223.5	61.0	9.6	66.4	9.2
%, 16.9	1.38~1.50	36.8	10.1	19.0	76.5	10.5
	1.50~1.70	28.0	7.6	34.9	84.1	12.7
	1.70~1.90	13.7	3.7	49.5	87.8	14.4
	1.90~2.20	9.4	2.6	65.7	90.4	15.7
	>2.20	35.0	9.6	87.6	100.0	22.6
		366.2				
3/4~3/16-in.	<1.25	0.4	0.3	2.7	0.3	2.7
Head ash, 17.1%	1.25~1.30	28.3	21.7	5.4	22.0	5.4
Weight: lb., 2,836.1	1.30~1.38	68.5	52.5	10.2	74.5	8.8
%, 36.0	1.38~1.50	13.5	10.4	19.8	84.9	10.1
	1.50~1.70	7.3	5.6	34.1	90.5	11.6
	1.70~1.90	3.7	2.8	52.3	93.3	12.8
	1.90~2.20	1.8	1.4	64.3	94.7	13.6
	>2.20	6.9	5.3	86.8	100.0	17.5
		130.4				
3/16-in.~14-m.	<1.25	0.3	0.9	3.6	0.9	3.6
Head ash, 14.4%	1.25~1.30	17.8	52.2	5.2	53.1	5.2
Weight: lb., 1,849.9	1.30~1.38	9.1	26.7	11.8	79.8	7.4
%, 23.4	1.38~1.50	2.9	8.5	21.4	88.3	8.7
	1.50~1.70	1.7	5.0	34.9	93.3	10.1
	1.70~1.90	0.7	2.1	52.2	95.4	11.1
	1.90~2.20	0.5	1.4	63.1	96.8	11.8
	>2.20	1.1	3.2	85.0	100.0	14.2
		34.1				
14~35-m.	<1.25	1.1	4.2	1.6	4.2	1.6
Head ash, not determined	1.25~1.30	14.1	53.2	3.9	57.4	3.7
Weight: lb., 494.18	1.30~1.38	5.5	20.7	12.2	78.1	6.0
%, 6.3	1.38~1.50	2.4	9.1	21.6	87.2	7.6
	1.50~1.70	1.5 *c*	5.7	34.8	92.9	9.3
	1.70~1.90	0.7	2.6	52.5	95.5	10.5
	1.90~2.20	0.5	1.9	67.7	97.4	11.6
	>2.20	0.7	2.6	84.9	100.0	13.5
		26.5				
35~100-m.	<1.25	0.5	3.4	5.4	3.4	5.4
Head ash, not determined	1.25~1.30	7.5	50.7	3.3	54.1	3.4
Weight: lb., 275.99	1.30~1.38	2.9	19.6	11.5	73.7	5.6
%, 3.5	1.38~1.50	1.5	10.1	21.1	83.8	7.4
	1.50~1.70	1.0 *c*	6.7	34.2	90.5	9.4
	1.70~1.90	0.5	3.4	51.7	93.9	11.0
	1.90~2.20	0.4	2.7	66.6	96.6	12.5
	>2.20	0.5	3.4	82.5	100.0	14.9
		14.8				

Table 66. Washability test on run-of-mine coal, crushed to pass a 3-in. round-hole screen *b*—*Continued*

1	2	3	4	5	6	7
Fraction	Specific gravity	Weight, lb.	Weight, %	Ash, % *a*	Cumul. weight, %	Cumul. ash, % *a*
<100-m.	<1.25	0.1	1.2	3.3	1.2	3.3
Head ash, not determined	1.25~1.30	3.0	34.5	2.9	35.7	2.9
Weight: lb., 162.24	1.30~1.38	2.4	27.6	8.2	63.3	5.2
%, 2.0	1.38~1.50	1.4	16.1	15.3	79.4	7.3
	1.50~1.70	1.0 *c*	11.5	23.2	90.9	9.3
	1.70~1.90	0.3	3.4	47.4	94.3	10.7
	1.90~2.20	0.2	2.3	63.5	96.6	11.9
	>2.20	0.3	3.4	79.5	100.0	14.2
		8.7				
Raw coal, calculated	<1.25	.....	0.7	3.0	0.7	3.0
Head ash, not determined	1.25~1.30	.....	27.2	4.9	27.9	4.9
Weight: lb., 7,894.2	1.30~1.38	.....	44.1	10.3	72.0	8.2
%, 100.0	1.38~1.50	.....	9.7	20.1	81.7	9.6
	1.50~1.70	.....	6.2	34.1	87.9	11.3
	1.70~1.90	.....	3.0	51.2	90.9	12.6
	1.90~2.20	.....	2.1	64.5	93.0	13.8
	>2.20	.....	7.0	87.3	100.0	19.0
3-in.~14-m.	<1.25	.....	0.4	3.3	0.4	3.3
Head ash, not determined	1.25~1.30	.....	24.3	5.3	24.7	5.3
Weight: lb., 6,961.9	1.30~1.38	.....	47.0	10.2	71.7	8.5
%, 88.2	1.38~1.50	.....	9.7	20.0	81.4	9.9
	1.50~1.70	.....	6.1	34.6	87.5	11.6
	1.70~1.90	.....	2.9	51.2	90.4	12.9
	1.90~2.20	.....	2.1	64.2	92.5	14.0
	>2.20	.....	7.5	87.5	100.0	19.5
Fines, <14-m.	<1.25	1.7	3.4	2.8	3.4	2.8
Head ash, 14.4%	1.25~1.30	24.6	49.2	3.6	52.6	3.5
Weight: lb., 932.4	1.30~1.38	10.9	21.8	11.0	74.4	5.7
%, 11.8	1.38~1.50	5.2	10.4	20.2	84.8	7.5
	1.50~1.70	3.5 *c*	7.0	31.3	91.8	9.3
	1.70~1.90	1.5	3.0	51.2	94.8	10.6
	1.90~2.20	1.1	2.2	66.5	97.0	11.9
	>2.20	1.5	3.0	83.0	100.0	14.0
		50.0				

a All ash determinations on moisture-free basis.
b Round-hole screen. Small percentage coarser than 3-in. from crusher.
c Grams.

Interpretation of the data of Table 66 is effected most readily by plotting a part of the figures thereon plus certain other derived figures, as shown in Fig. 142. The curve marked CUMULATIVE graphs directly the relationship between the quantities of columns 6 and 7; that marked SPECIFIC GRAVITY similarly is the direct graph of columns 2 and 6. The ELEMENTARY-ASH curve graphs the ash analysis for a given gravity fraction (col. 5) against the mean of the corresponding and preceding cumulative-weight percentages (col. 6). The scales of abscissae of all three of these curves are chosen so as to produce in all cases substantially the horizontal spreads illustrated. The SPECIFIC-GRAVITY DISTRIBUTION curves are plotted from the specific-gravity curve. Taking the ±0.10 curve as an example, the weight-per cent. of material between gravity 1.3 and 1.5 (= 1.4 ± 0.1) is read from the specific-gravity curve as 81.7 − 27.9 = 53.8, and this value is plotted as ordinate against sp. gr. 1.4, both on the scales of the already existing graph. Other points on the ±0.10 curve are similarly determined; the ±0.15 curve simply takes in a larger range of gravities.

Fig. 142 shows, if entered, say, at 9% cumulative ash, by the intersection of this ordinate with the cumulative curve, that about 79% of the coal may be taken with an average ash content of 9%, and that this coal will float in a solution of 1.44 sp. gr. (abscissa of the intersection of the sp. gr. curve with the horizontal through the intersection of the 9%-cumulative-ash ordinate with the cumulative curve). The abscissa of the intersection of

this same horizontal with the elementary-ash curve, read on the elementary-ash scale, indicates about 22% ash in the most impure fraction of the floated material.

The slope of this elementary-ash curve is an indicator of the ease of washing the coal to a given percentage ash. Steep slope represents relatively small ash and correspondingly small specific-gravity differences, with consequent great difficulty in making clean-cut separation; flat slope represents the reverse physical condition and correspondingly easy separation.

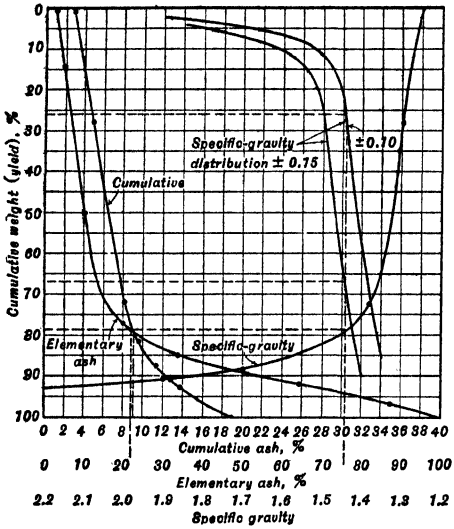

FIG. 142. Washability graph for raw coal (data from Table 66).

The "specific-gravity distribution" curves tell the same story in a slightly different way, in that they read directly the relative quantities of material close to the separating gravity. Bird (*Proc. 3'd Internat'l Conf. on Bituminous Coal*, 1931) correlates the ordinates of these curves with ease of separation as follows: 0 to 7, simple separation; 7 to 10, moderately difficult; 10 to 15, difficult; 15 to 20, very difficult; 20 to 25, exceedingly difficult; over 25, formidable. Applying these criteria to Fig. 142, it is apparent that the elementary ash curve has a constant slope from about 35% ash up, and that this corresponds to 7% or less on the ±0.10 curve; on the other hand, 25% on the ±0.10 curve corresponds to about 22% elementary ash, where the slope of this curve, although definitely steeper than at 35% ash, is not markedly so. Thus the entire gamut of washability from simple to formidable is comprised in the short section of the elementary-ash curve from 22 to 35% and its utility as an indicator is correspondingly poor.

Fig. 142 indicates that an efficient washer (±0.10 curve) will have a simple job separating a coal analyzing about 10.5% ash, making a reject containing material of 37% ash upward, with a theoretical yield of about 85%.

Similar analysis of graphs of the data for individual sizes in Table 66 will give similar information as to theoretical yields and ease of separation of the various-sized products. Practical efficiencies may, of course, be higher, if separation is effected on more or less sized products, but the composite yield can in no case exceed the theoretical yield indicated by Fig. 142.

Significance of inefficiency in washing caused by the attempt to wash to an ash content too low for the coal may be seen by the following analysis based on the curves:

The theoretical yield for 10.5% ash in washed coal is about 85%. Assuming 99% washing efficiency for this easy separation (index 7 on the ±0.10 curve), the actual yield would be 84.15%, or 84.15 tons per 100 tons of raw coal. The theoretical yield for 9.3% ash is about 80%. Assuming 90% efficiency for this difficult separation (index 15 on the ±0.10 curve), the corresponding actual yield would be 72 tons per 100, a drop of 12.15 tons. This lost material, most of which could be recovered as middling in an efficient washery, would analyse 17.7% ash, according to the following calculation:

Units ash in washed coal of first operation, 84.15 tons @ 10.5% =	883.58
Units ash in washed coal of second operation, 72 × 9.3 =	669.60
Units ash in middling (difference) =	213.98
Per cent. ash in middling = 213.98/12.15 =	17.7

Slotted-screen tests are made on sized gravity products with screens having apertures substantially 25, 50, and 75% the width of the aperture of the square-mesh retaining screen and length at least equal thereto, but preferably greater (see Art. 12). Degree of flakiness is thus indicated and, since jig and table separation increase in difficulty with increasing flakiness of the high-ash material, estimates of operating efficiency must be modified accordingly.

Crushing tests are indicated with a coal of the character of that analyzed in Table 66 to determine whether the coarser lower gravity fractions will, when crushed, release sufficient high-gravity material to justify the cost of crushing and the loss through the production of additional fines. Graded crushing with closed-circuiting at each step is usually practiced with a view to reduction of this loss.

22. ORE-TESTING APPARATUS AND PROCEDURES

The machines necessary for a well-equipped laboratory comprise crushers, samplers, weighers, feeders, screens, grinding mills, classifiers, gravity and electrical concentrators, flotation machines, thickeners and filters, and storage and transport equipment.

Crushers. It is not practical to attempt to adapt laboratory crushers to a continuous flowsheet. One crusher, usually of jaw-type (and preferably of Blake-type, from an instructional standpoint, in a school laboratory) should be large enough (7×10-in.) to receive head-size rock, so that run-of-small-mine rock can be reduced to treatment size without excessive labor. Small gyratories are available for secondary service, but a cone crusher small enough is not made (1943). Rolls (12 or 16×10-in.) are best for the fine work required. Performances of laboratory crushers are not safe bases for choice of mill machines. (See Sec. 4.)

Samplers. One machine sampler for dry rock should be available. It is a convenience, if it can take 1 1/2-in. rock when making a one-eighth cut. It should follow a surge bin designed to discharge completely by a feeder that gives a reasonably constant stream despite a fluctuating head of ore. It is convenient to have the sampler high in the plant, with elevating apparatus to the surge bin capable of receiving from all of the larger crushers.

Most sampling at the finer sizes and/or of small lots is best done by hand-sampling methods (Art. 2).

Weighers. Continuous weighers are not justified. A platform scale weighing in metric and English units to about 1,000 lb. and sensitive to 5 lb., and another weighing to about 300 lb. and sensitive to 0.5 lb. are sufficient for all coarse weighing. For finer work a trip scale weighing in metric and common units to 10 lb. with slide scale graduated to 10 gm. and 1/4 oz., sensitive to 0.5 gm.; pulp balance weighing to 250 gm. and sensitive to 0.1 gm.; and an analytical balance are sufficient (excluding chemical laboratory).

Feeders. Bins should be provided with automatic feeders with variable-speed control and movement-recording apparatus. Belt feeders with ratchet-and-pawl drive and revolution counters on the head shaft are most satisfactory. Self-contained portable vibrating or shaking-tray feeders mounted with small feed hoppers are best for feeding individual machines with dry or moist sands. An inclined trough along which a weighed quantity of dry or moist sand or slime is uniformly spread, and from which a given length (weight) of charge is washed out per minute with a constant stream of water, is the most satisfactory wet feeder for the laboratory. Travel of the feed-water stream may be made automatic by mounting the nozzle on a mechanically driven screw.

Screens that will simulate plant performance in the laboratory are not available as a practical matter. The best approximation for most purposes is made by placing light skirt boards down the length of a small commercial vibrating screen, spacing them to give the desired capacity per sq. ft. of screen surface used; supporting them well above the screen cloth and sealing with light flexible rubber strip; and locating them over that part of the cloth that has nearest the average vibration. The screen is preferably placed to receive from the sampler surge bin, so that some idea can be gained of the effect of closing circuit on the rolls. With such an arrangement it is possible to start a continuous operation with screen-sized feed, although the rolls in such a laboratory circuit will usually be woefully underloaded.

Grinding mills of the tumbling type are available in any desired size. It is probable that the best arrangement from the standpoint of a continuous operation is to choose a mill that will operate normally at a capacity equal to that of the concentrating and/or other equipment that is to follow it, and to design for removal or addition of shell (bolted-in sections, with a head-end drive and a sliding base for the discharge end) to accommodate for other capacities. The same shell will take any grinding medium desired. The installation may well be made to permit of closed circuits for both wet and dry grinding, with either screens or classifiers as the closing apparatus. Since tumbling mills will do just about the same amount of grinding per unit of energy input irrespective of size, if the limiting size of feed is adjusted to the diameter, and circuit conditions are comparable, considerable information useful in flowsheet design is obtainable from laboratory grinding tests. On the other hand, the operating difficulties in the way of balancing a closed laboratory grinding circuit with small concentrating or cyaniding apparatus are formidable; the job cannot be done dependably short of many hours or even days of operation, and overnight shutdowns are, in most cases, fatal. The larger the grinding mill and subsequent apparatus the easier the circuit will be to operate. The grinding machine should be so driven that reasonably accurate measurement of power consumption can be made.

Classifiers. Laboratory classifiers comprise both models of mill-scale apparatus and batch units devised for very small test lots and for investigation of fundamentals. The forms of the latter are legion. Descriptions of some of the better-known types follow.

In general, however, experimenters make up this kind of equipment to satisfy the demands of particular experiments.

Classifier tests give information, not yielded by screen tests, as to the distribution of material to be expected in a gravity-concentration plant; and, in conjunction with screen tests, form a basis for prediction of the results to be expected from gravity-concentration treatment. Testing classifiers are also used to prepare material for concentration tests on shaking tables and the like. Elutriation tests (Art. 13) are classifier tests applied to sizing fine material, but these same tests, subjected to different interpretation, give useful information regarding gravity concentration.

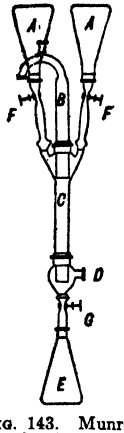

FIG. 143. Munroe tube classifier.

Beaker classification involves the same manipulation, in so far as separation into different grades is concerned, as the decantation method of sizing by elutriation. When applied to coarse material (0.5-mm. to, say, 2.5-mm.) the time required for settlement is so short that there is much overlapping of the grades and results are very different from those attainable in a rising-current classifier.

Sorting tubes are made in glass for both free-settling and hindered-settling classification (Sec. 8, Art. 1).

Free-settling tube (designed by H. S. Munroe and manufactured by Eimer & Amend and by Emil Greiner, N. Y.) is shown in Fig. 143. The essential parts are sorting column *C* with feed inlets *F*, vortex fitting *D*, overflow tube *B*, and feed and spigot flasks *A* and *E* respectively. Joints between flasks and apparatus are made with rubber tubing. The ends entering the flasks are expanded by means of brass thimbles of suitable diameter slipped inside the tubing. Joints between *B*–*C* and *C*–*D* are made tight by rubber tubing slipped over the lower ends of *B* and *C* respectively. The annular space between the lower end of *B* and constricted portion of *C* should be about 1/8 in. wide. The lower end of *C* should project about 1/2 in. below the bottom of the water inlet in *D*. When set up, the tubes *B* and *C* should be clamped rigidly in vertical position in a ringstand which carries also two large rings near the top in which flasks *A* may hang. Flask *E* should rest on the base of the stand. There should be no kinks in the rubber tubes connecting the flasks. Tubes are made in several sizes, ranging from about 1- to 3-in. diameter of sorting column *C*. The actual average internal diameter of *C* is obtained by measuring the water drawn from between spaced marks and applying equation $Q = Av$ (see Sec. 20, Art. 2). The quantity of water necessary to overflow in a given time in order to produce any required average rising velocity in *C* may then be calculated from the same equation and the desired current set by bringing the overflow to this figure.

Procedure. A weighed sample of ore is divided about equally between the two flasks *A*. Enough water is added to moisten the ore thoroughly, with shaking; the bottles are then filled with water, and put into position for feeding, the cocks *F* being closed. The rubber tubes must be full of water both above and below *F*, because an air bubble prevents proper discharge of ore. Having adjusted the flow of water up the column to the desired velocity, cocks *F* are slightly opened to allow ore to drop slowly. Light material will be carried over, while the heavier will fall through the rising current and into flask *E*. When all ore is out of the upper flasks, a few minutes are allowed for the sorting column to clear partially, the current is then shut off and a little more time allowed for matter still in suspension to settle. Cock *G* is then closed, flask *E* removed, and its contents transferred to feed flasks *A*. This last operation may be simplified by having at hand an extra flask *E* filled with water; when about half the ore has fallen into the first flask, it may be replaced by the second flask, after closing *G* temporarily. Two flasks *E* may then be put into the position first occupied by flasks *A*. Current is now adjusted for the next faster velocity desired, and the operations repeated. While working with velocities up to, say, 20 mm. per sec., it is well to catch the entire overflow, water and solids, in pails which may be set aside for a sufficient length of time to permit solids to settle perfectly; with the higher velocities, overflow may be led to pans in which solids will settle while water overflows. Solid matter carried over at each velocity is caught separately, dried, and weighed.

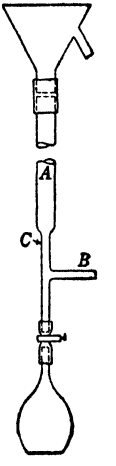

FIG. 144. Hindered-settling tube.

Hindered-settling tube (Fig. 144) consists of a glass tube *A* about 1-in. diameter and 30 in. long, drawn down at the lower end to smaller diameter, and provided with a side tube *B* for water inlet. The ratio of the diameter of section *C* to that of section *A* for all-around work on feeds ranging from, say, 2-mm. maximum to 0.5-mm. maximum should be 1 : 2, but a ratio of 1 : 1.5 is better for the coarse separations and one of 1 : 3 or 4 for fine sizes, and a series of tubes is best for close work. The length of section *C* should be 3 to 4 in. Inlet *B* and the spigot should be about 1/4-in. internal diameter. A galvanized-iron or sheet-copper funnel with side tube about 3/4-in. diameter should be provided for feeding and collecting overflow, and a number of small-necked flasks for collecting spigot products. The joint between tube and flask is a rubber tube controlled by a stopcock.

Final settlement of any particle is determined by its ability to pass the constricted section *C*, free-settling against a given current. Hence this is the important diameter, and currents are set for section *C* by the methods described under ***Free-settling tube*** above.

Operation starts by filling the entire system with water, then setting the minimum current (about 5 mm. per sec.) and feeding material slowly into the funnel. The feed should be wet to prevent skin flotation and the best results will be obtained if the slimes are slowly decanted into the funnel several times before any of the sands are poured in, taking care that the rate of feeding slimy water is insufficient to make the rising current at the overflow level equal to or greater than that in section *C*. Collect the slime in a pail and set aside. The water in the flask should be slime free; if not, refeed the spigot product. Collect the spigot product. Set the current at the maximum rate, refeed the first spigot product, run until only an occasional grain falls through section *C*, then close the stopcock, collect the spigot product, and replace the flask, full of water; slack off the current gradually until the next lower current is reached, open the stopcock, feed back any sand that overflowed in the preceding operation, and run as before until settling substantially ceases. Repeat with decreasing current velocities until the 5-mm. velocity is again reached. It is better to run at this current a second time, adding the overflow and material remaining in the teeter-chamber *A* to the first overflow. Dry and weigh the products.

Constriction-plate hindered-settling classifier (*RI 3328*) consists of a pyrex tube, 6(diam.)×30-in., surmounting a flanged cone with a constriction plate between cylinder and cone. The plate is brass, drilled with 3/64-in. holes at 3/8-in. centers on a 60° diagonal pattern. The cone is provided with a water-entrance tube. Overflow from the tube is caught and discharge by a slanting peripheral launder mounted at the top of the settling column. The classifier has a capacity of approximately 25 lb. of <10-m. material.

Operation of the classifier is as follows: Water is fed into the glass tube until a depth of 6 to 10 in. is obtained, and very slight flow is continued while the ore charge is introduced. After introduction of the charge, flow is controlled so as to produce overflow of slimes, which are caught in a tub. Thereafter water flow within the tube is increased until the entire column of ore is in teeter and continued until the grains have had time to adjust themselves and find their proper static environment relative to other grains; stirring with a long steel rod aids in attaining this condition, by freeing trapped grains. The water is then entirely cut off until a compacted bed is formed. It may then be turned on again to such extent as will permit some overflow but will not loosen the compacted bed. The column is divided into spigots by visual inspection and each spigot is siphoned off in succession from the top downward. Three spigot products are usually made, though as many as five may be produced.

This classifier is a development of the hydraulic sizer described by Fahrenwald (*A TP 275*) which has a capacity of about 1,000 gm. of solid.

Multispigot classifiers. Miniatures of mill-type classifiers (Sec. 8) are used. The most satisfactory miniatures are those of the tank type, either hindered-settling or free-settling. Fig. 145 shows a useful size, which has a capacity of about 1 kg. per min.

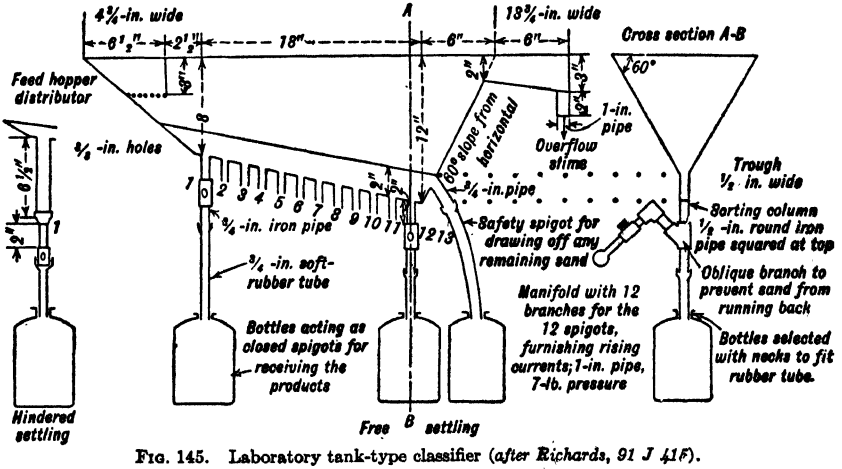

FIG. 145. Laboratory tank-type classifier (*after Richards, 91 J 415*).

Laboratory classifiers are much more conveniently operated with closed spigot, when possible, as it is then unnecessary to supply and dispose of large quantities of spigot water.

Interpretation of classifier tests. The weights of the products tell the tonnages of different grades for which concentrating machines must be provided. Assays of the combined products do not yield much information concerning probable mill performances, on account of the middling present; actual concentration tests should be made. Sizing the products on a series of screens will approximate the work of shaking tables, the finest sizes representing concentrate, the coarsest the tailing, and the intermediate, middling. If the sized products are laid out on a ruled board in such a way that the abscissa of any grade is the number of the classifier spigot from which it came and its ordinate the screen

size, an excellent picture of the work of the classifier is obtained. The best classification is represented by maximum spread on this board between the heaps of pure heavy mineral and pure gangue. The smaller the middling heaps, the heavier the loads that can be put on the following shaking tables; and, of course, the size of the middling heaps indicates the tonnage that must be reground.

Settling ratio is the ratio of the average diameter of light-mineral grains to that of the heavy-mineral grains in a classified product. It may be calculated from the layout described in the preceding paragraph by sorting out the middling grains in the various heaps, assaying the residues for heavy mineral, and then calculating average sizes of the two kinds of grains in each spigot product. The larger the settling ratio the easier the work of the concentrator treating the product and the better the work of the classifier. *Richards* has determined the average free-settling ratio of quartz and galena as about 4 and the hindered-settling ratio slightly less than 7. These figures were obtained by careful laboratory work with artificial mixtures of the two minerals and making a large number of successive spigot products with small current differences. Excellent mill work will show not more than 2.5 and 4 respectively for these same minerals, on account of the smaller number of spigots, the interference by middling grains, and overloading of the classifier.

Mechanical-classifier tests can be made properly only in machines of the type concerning which information is sought, and, since so many other factors than simple settlement in water are involved, *e.g.*, agitation, time of draining sand, slope of draining surface, depth of pool, and the like (see Sec. 8), it is almost essential that the testing machine be a replica of the full-size machine, in longitudinal section at least, and even then it is doubtful whether the small apparatus will even approximate the work of the large machine.

Drag and spiral types are available in manufactured form; the reciprocating-rake type is not. An attempted substitute therefor is shown in Fig. 146. It is essentially an inclined flight conveyor modified to drag intermittently. Drag chains (*1*) carrying transverse flights (*2*) run over the lower sprocket

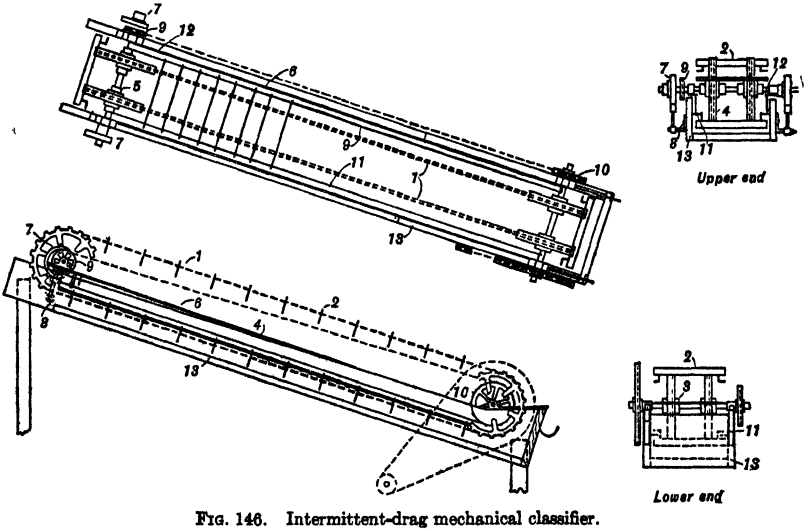

FIG. 146. Intermittent-drag mechanical classifier.

wheels (*3*) to which power is applied by drive sprocket (*10*), and over upper sprocket wheels (*4*) which idle between collars (*5*) on a shaft mounted in eccentrics (*7*). The shaft bearings are mounted on long hinged arms (*8*) so that the shaft may be raised or lowered relative to the inclined trough (*13*) in which the flights operate. The distance between head and tail sprockets is unaltered by such variation. The eccentrics are attached to the ends of the driven shaft and are pivoted in the supporting brackets (*8*) located below the shaft. The flights are provided with arms that ride on the flight-guide bars (*11*), which are hinged at their lower ends and attached to the upper shaft by means of hangers (*12*). This mounting of the upper shaft permits the eccentrics to move back and forth while the shaft rises and falls as it rotates. This latter motion is imparted to the flights by means of the guide bars. The entry point of the feed is a short distance above the drive shaft. In operation sand is dragged uphill for a short distance by the flights, which gradually rise and so spread the sand heap. After a short interval the second or third succeeding flight descends and repeats the cycle.

Thickening. For methods of testing see Sec. 15, Art. 6.

Bond (*141 #1 J 54*) describes an integrating scale for the calculation of settling area from a settling test. Graduate a celluloid scale, 1×16-in., into 6 @ 2 2/3-in. divisions, and subdivide each major division into tenths. By measurement of the distance between cylinder graduations determine the value of 2 2/3 in. in cubic centimeters. This value, designated by J, is ordinarily about 195 cc. This number in grams is the dry weight of ore to be taken with this graduate. $J/G_s = V_s$, where G_s = specific gravity of dry ore, and V_s = cc. occupied by dry solids. Place the zero point of the celluloid scale at the level V_0 on the graduate scale (ordinarily about 75 cc.). The celluloid-scale division now will read dilutions at any stage of settling, and

$$A = (F - F_f)/10X$$

where X = celluloid-scale divisions settled per min., and F and F_f are successive dilutions and final dilution respectively.

Filtration. The usual test apparatus is a small filtering surface reproducing essentially the type of surface to be investigated. The Oliver Filter Co. uses a filter-leaf frame of the form shown in Fig. 147, item *Y*, made of Bakelite, cast in one piece. A stainless-steel

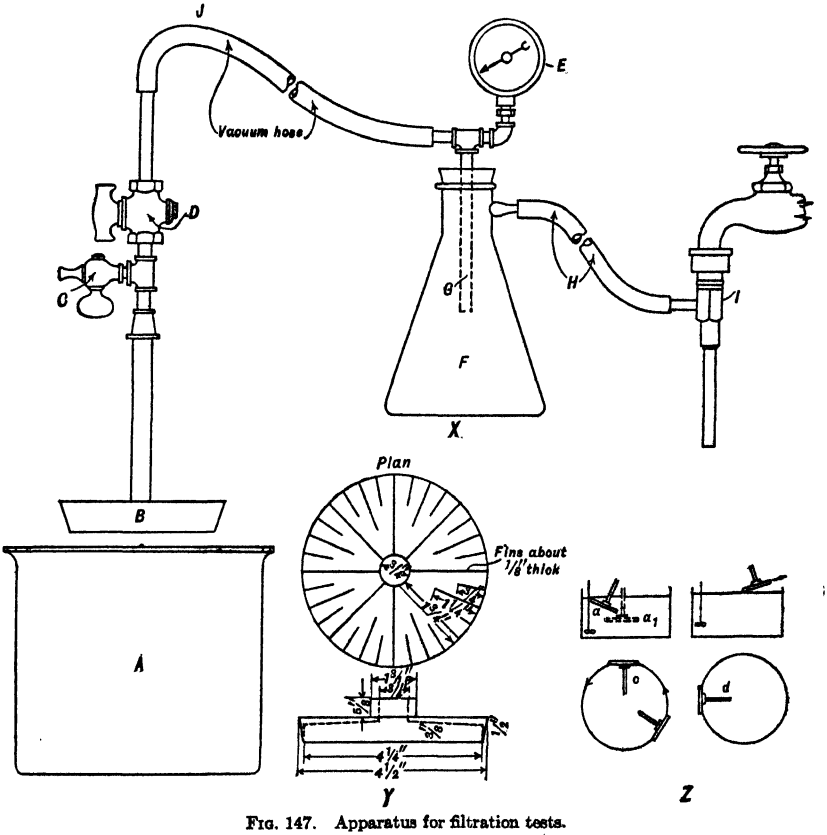

FIG. 147. Apparatus for filtration tests.

band, with inside dimensions about 1/32 in. larger than the frame, is provided. To prepare the test leaf, a piece of filter cloth is cut large enough to cover the frame and turn down over the edges; it is placed over the frame, and the band is forced down so that the cloth makes a tight fit at the edges. The filter leaf is then connected into the typical test-leaf hookup shown in item *X*, comprising a container *A* for the slurry, with means for maintaining suspension; the test leaf *B;* flexible connecting piping containing a vent cock *C* and shutoff cock *D*, and attached to a vacuum gage *E* or a mercury manometer or other pressure-measuring device; a vacuum receiver *F*, which is preferably transparent and large enough to receive a graduate under the filtrate pipe *G*, so that filtrate volume can be read directly during operation; and connection *H* to a source of vacuum, which is conveniently a water aspirator *I*, as indicated.

Test procedure is designed to simulate the cycle of a particular type of filter. For example, the cycle of a drum-type filter (Sec. 16, Art. 3) may be broken down into (1) a cake-forming stage, during which the cloth is submerged in the pulp and is under vacuum; (2) a cake-drying stage during which cloth is out of contact with the pulp but still under the action of the vacuum; (3) a cake-discharge stage begins when the vacuum is shut off and ends with resubmergence.

In testing to parallel plant performance, the test pulp should have the same temperature, *p*H, and state of dispersion as the pulp to be supplied to the filter in the mill. The test should be performed at such pressure as will be available at the mill; elevation of mill above sea level and vacuum equipment to be used are the controlling factors.

Preliminary run is made to determine the time required to form a dischargeable cake. With stopcocks *C* and *D* closed, introduce test leaf as at *a*, item *Z;* when immersion is complete, turn on vacuum, which will have been built up to the desired level in *F*, and note time; move leaf slowly through the well-stirred pulp, following a circular path; note vacuum; finally, bring leaf out of pulp as shown; shut off vacuum, and note time. The time elapsed is the cake-forming time. The cake should be dried and its thickness determined by placing several pieces on top of each other, measuring total height and computing average thickness. The time required to produce minimum thickness of cake that discharges cleanly is the desired cake-forming time, since maximum filter capacity is obtained with this minimum cake thickness or one only slightly larger.

Test for filter capacity is made by repeating the procedure of the preliminary test, using the cake-forming time determined therein, and holding the cake in position a_1, if necessary to prolong the period. When the leaf is removed from the pulp it should be brought up slowly through a circular arc with center at *J* until past the horizontal position to the position shown in *c*, item *Z*. Time for this should range from once to twice cake-forming time. Shut off the vacuum and note the time. Normally cake may now be dislodged by blowing through the vent; stubborn cake must be dislodged by means of a spatula. Place the cake in a tared dish, weigh, dry, and weigh. Note and record total filtrate. From dry weight of cake and filter area, capacity expressed as tons per sq. ft. of filter area per revolution may be calculated. Time per revolution depends on cake-forming time, cake-drying time, cake-washing time if washing is practiced, and discharge time. Washing time depends upon rate and type of washing, which depend in turn upon the character of the cake and the amount of cleaning required. It may be approximated by spraying the cake while moving from *c* to *d*, item *Z*. Discharge time is not measured; it is usually assumed to be one-half of forming time. Relation of cycle time to forming time, wash plus drying time, and drum submergence is given in Table 67.

Calculation. When cycle time is known, capacity figures on an hourly or daily basis can be calculated.

Example. If the wash plus drying time equals forming time, and a 0.1-sq. ft. filter leaf made 0.2 lb. of cake (dry weight) in 1/3 min. submergence time, this is equivalent to 2 lb. per sq. ft. per rev. or 288 lb. per sq. ft. per 24 hr. If 10,000 lb. of solid is to be filtered per 24 hr., it will require 34.7 sq. ft. The corresponding size of commercial filter can be chosen from this figure. It is good practice to reduce filter capacities determined by laboratory testing by multiplication by a factor which makes allowance for fluctuations of plant conditions, blinding of cover, etc. This factor varies from about 0.8 to 0.65. Pulps containing free lime take the lowest factor since carbonate formation on the surface of the cloth decreases its permeability.

Laboratory-size filters of the drum and leaf types, suitable for more extensive testing, may be purchased from the manufacturers.

Table 67. Relation between times in a revolving-filter cycle

Submergence, % of diameter	40	25	20	16	12
Submergence, % of circumference	43.5	33.5	29.5	26.5	23.0
Maximum cake-forming arc, deg	135.0	100.0	93.0	82.0	68.0
Washing and drying arc, deg	167.0	214.0	219.0	238.0	249.0
Discharge arc, deg	58.0	46.0	48.0	40.0	43.0
Cycle time *a*	3*F*	4*F*	4*F*	4 1/2*F*	5 1/2*F*
Wash and drying time	*F*	2*F*	2 1/2*F*	3*F*	3 1/2*F*

a *F* = cake-forming time.

Concentration Tests

Hand-picking often affords valuable information, even when not considered a practicable method of treating a given ore under existing conditions. It may be applied to ore as fine as pea-size; and, in the investigation of screened products, may be carried down to 1.0- or even 0.5-mm. with the aid of a hand glass or a low-power binocular microscope. For satisfactory hand-picking, ore should be sized between rather close limits, and should be clean; washing brings out the distinctive color or luster of some minerals.

Practicability of hand-picking on a commercial scale may be tested by attempting to make the following products, or as many of them as practicable: (*a*) Rich minerals, fit for market or for metallurgical treatment. These will include not only such minerals as galena, blende, chalcopyrite, etc., nearly or quite pure, but also rich mineral which possibly can be treated better by some metallurgical process than by mechanical means, for example copper carbonates, silver chloride, finely disseminated silver ore, etc. (*b*) Rich ore, with coarse disseminated mineral, for coarse crushing and jigging. (*c*) Fine-disseminated ore, usually poor, in which the useful mineral occurs in such small particles that

exceedingly fine crushing will be necessary to liberate it. (*d*) Barren waste, or material that does not seem to be mineralized. Several classes may sometimes be made of this, according to gangue minerals or rocks in the ore, or when a difference of color, texture, or other characteristic indicates a possible difference in richness. Assays of these different classes of barren or seemingly barren material will show which may be thrown away, and which should be included with the ore for milling. Finally, inspection of the different products may show that some classes are present in small quantity only, and that perhaps several sorts may be combined without disadvantage.

Economy of hand-picking may be investigated by means of the formulas in Art. 24.

Jigging. When a preliminary examination of the ore indicates the feasibility of jigging (or tabling) as a mode of concentration, it is good practice to run sink-float tests (see Art. 20) on sized samples. The information thus obtained will establish grades and recoveries to be expected. Generally speaking, a specific gravity difference between mineral and gangue giving a concentration criterion of 1.75 (Sec. 11, Art. 1) is sufficient for successful application of gravity methods. However, if marked differences of shape exist, the specific gravity difference must be greater. For example, spodumene (sp. gr. 3.15) tends to go with quartz (2.65) and feldspar (2.6), because it breaks into acicular particles whereas the others break more or less equiaxed. Micaceous minerals usually produce platy particles on fracture; these also tend to go with lighter minerals.

Hand jigging, for testing ore ranging in size from 10- to 2-mm., requires a tub of water and a few small screens of differing mesh. Before jigging, the ore should be sized fairly closely.

Procedure. Put about 2-in. depth of sized ore into a sieve having a mesh fine enough to retain it, and jig for several minutes under the surface of the water, with a long, slow stroke for the coarser sizes, and a shorter and quicker stroke for finer sizes. A quick downstroke combined with a slower upstroke is best. Care should be taken to keep the sieve level and to avoid any horizontal or overturning movement of the mass of ore. When the tailing appears clean, scrape off the upper layer and replace it with an equal amount of ore, and resume jigging. Middling and concentrate should be allowed to accumulate unless the layers become too thick. The main object of this preliminary jigging is to produce tailing as poor as possible. When the whole sample has been treated, the accumulated concentrate is cleaned by careful jigging, aided by hand-picking, if necessary. Skimmings from the cleaning operation should be added to the middling and the whole rejigged and reduced to the smallest possible bulk by combining part with the concentrate and part with the tailing. Assays and microscopic examination of the products will indicate the maximum size at which jigging can profitably begin.

A rather more elaborate hand jig, described by *Richards,* consists of a square frame about 12×12×6-in., made of heavy galvanized sheet (10- to 14-gage) turned over 1/8×1/4-in. strap top and bottom for stiffness. Slats of the same strap to support the screen should be placed 2 or 3 in. above the bottom of the frame and the screen wired thereto. It is desirable to solder the joint between screen and sides, but this makes it difficult to change screens, if desired. Otherwise some leak at the edges must be tolerated. In operation the screen is hung from a helical spring at the desired height above the tub in which jigging is to be done and is then plunged and lifted in the usual manner.

Machine jigging. Experimental jigs for testing purposes, operated by hand or power, are made by manufacturers of commercial jigs; they are useful equipment for testing laboratories, but their results are no more illuminating than those obtained by hand jigging, except that they are superior for hutch making. All small-scale continuous jigs are subject to the disadvantage that the ratio of dead space along the sides to total sieve area is relatively large and that an undue amount of heavy grains travels along these dead sides into subsequent compartments or even into the tailing.

Pan; gold pan; miner's pan are different names for the same device. (See Sec. 11, Art. 14.) The pan has three principal uses, *viz.,* (1) to assay gold-bearing gravels in prospecting, and less frequently, to make a rough assay of crushed vein material for gold; (2) to work gold-bearing gravel on a small scale; (3) to make gravity-concentration tests on heavy-metal ores. The procedure differs according to the material being panned.

Method of gold panning is to take a pan load, submerge it, then work the material over carefully with the hands, rejecting large boulders that are free of adhering fines and clayey material, until all of the coarse material is removed and all clayey or cemented material is disintegrated. Next, with the pan submerged or with the material in the pan submerged, holding the bottom substantially horizontal, subject the pan to a rotary motion of sufficient intensity to produce suspension of the solids. The heavy particles, being more resistant to suspension, work toward the bottom and leave the surface metal-free. Now, with the pan above the water surface, tilt it slightly away from the operator and at the same time rock it from side to side. The resulting action of the water tends to wash solid matter to the lower edge, and the amount of tilt and speed of rocking should be such that only the surface layers of particles are washed down into a TOE at the lower rim. The toe is next washed off by alternately dipping and raising it through the water surface, or is pushed off with the thumb. These three operations are repeated in order until the amount of material remaining in the pan is small and consists of heavy minerals and some fine light sand. Further separation can sometimes be made by moving the pan in such a way that a small amount of water therein will course around the trough formed by the intersection of side and bottom. Such treatment strings out the material with the lightest sand ahead and the heavy material bringing up the rear, and it is often possible, by careful manipulation, thus to work out a further quantity of light sand. This treatment will usually, also, bring any gold to

light at the tail of the fan of material. Final separation of gold from the heavy minerals is made by amalgamation or by drying, separating magnetite with a magnet and the balance of the waste by blowing (Sec. 11, Art. 34).

Testing an ore differs from the above procedure in that (1) the ore must first be ground to a size that will free a goodly part of the valuable mineral, (2) the weight of the sample taken can be and should be determined, (3) stratification requires more careful and prolonged swirling, and (4) the thickness of the surface layer removed in each cycle must be thinner. The operation should be conducted over a tub in which the first tailing is collected for repanning. Concentrate will always contain considerable gangue and the tailing some valuable mineral. In the hands of an experienced operator the recovery will be about the same as is possible in mill work, but mill concentrate, especially the coarser sizes, will assay higher.

An experienced panner, working steadily, can treat about 100 pans of uncemented gold gravel per 10-hr. day, and proportionately less according to the degree of cementation. The same man cannot run down more than one-third as many samples of galena-quartz ore and even less of ores in which the difference in specific gravities of heavy and light minerals is smaller.

Haultain Superpanner (*40 CIMM 229*), Fig. 148, consists of a flat V-shaped pan, 10 in. wide, about 1 in. deep at the head-motion end, and about 2 in. deep at the other end, to the upper surface of which linoleum is conformed in such a way as to do away with edges and corners. The pan is so shaken by the combined actions of the longitudinal and transverse rocking motions that a point of the pan describes an egg-shaped path (with the pointed end oriented toward the head motion). The pan is carried by a longitudinal wooden member *A* to which are attached two sheet-metal cross-members *B* and *C;* the assembly resting on the upper ends of 4 piano-wire rods attached at points B_1, B_2, C_1, C_2, which pass through the sheet-metal base *D*. Longitudinal motion is imparted by a single-arm cam *E* rotated by a variable-speed electric or air motor *F*. Length of longitudinal stroke is changed by rotating an eccentric mounted on the motor shaft next to the cam. Member *A* is held up against the cam by spring *G* acting through lever *H* and controlled by hand wheel *I*. Sidewise motion is produced by moving notched flats *J* and *K*, loosely held at one end by bolts and attached at the other end to cranks operated by shaft *L*, which is driven by a variable speed motor *M*. The motion is transmitted at the head end through a wire *S* directly attached to *A*, and at the tail end by wire *T* attached to one end of lever *N* and by wire *U* attached to the other end of *N* and to *A*. Springs *O* and *P*, attached to *A*, may be varied in tension by varying the lengths of wires *Q* and *R;* they act as restituters of the sidewise motion. The pan is attached to *A* in the position shown by the dotted rectangle in Fig. 148, and is provided with two tubes (one at the head and the other at the foot of the pan) adjustable as to position above and across the pan. The tube at the head-motion end is connected to the water supply; the tube at the foot of the pan to a demijohn under reduced pressure.

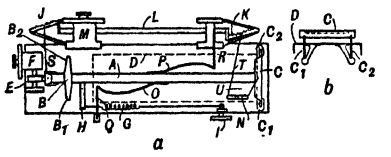

FIG. 148. Diagrammatic sketch of Haultain Superpanner.

Adjustments are slope, speed, and amplitude of longitudinal motion, intensity of end bump, speed of side stroke, amplitude thereof at head and foot of the pan, amount of wash water, and depth of pool at the feed end. Usually only three of these adjustments are varied—slope and the speeds of the end and side motions. Depth of the pool varies during a run with removal of material. De Rycker and Rey (*141 #12 J 46*) eliminated the bumping post and substituted a special cam designed to give quick-return motion, keeping contact with the cam by means of springs. This change eliminates stroke setting. Direct tailing overflow was provided with a raised lip, making a small pool to give a slight hold-back; the weir was made narrow.

Elements of action are: (1) End-bump to move material forward, with the pan shape acting to confine solid into an ever-narrowing pocket, (2) side motion to maintain fluidity of mass and permit stratification, (3) washing to skim the surface of the advancing material, the tilt of the pan and the side motion aiding.

Applicability. The Superpanner makes separations of materials with specific gravities very close together and will separate minute amounts of heavy mineral, if present. Thus 5- to 15-μ gold was separated from a tailing where a prolonged microscopic search failed to find it. The range of sizes that can be treated is from 65-m. down to 14-μ; results through this range are quantitative; for smaller sizes qualitative information is afforded. Use of heavy liquids, *e.g.*, acetylene bromide, improves performance. The chief utility of the Superpanner in laboratory testing is in production of clean concentrate and tailing. These products may be used to determine mode of occurrence and association of particular minerals either by assay or microscopic examination. Its ability to separate minute amounts of heavy mineral, and to separate mineral pairs such as gold from gold tellurides, or chalcopyrite from sphalerite, makes it a powerful tool.

Vanning is somewhat similar to panning but not applicable to as coarse material (0.5-mm. max.) and limited to much smaller quantities, *e.g.*, about 50 gm. Vanning plaque is made of enameled iron in the shape of a spherical segment, about 12-in. diameter and $^3/_4$ in. deep at the center. The Cornish vanning shovel is essentially a plaque mounted on a handle about 24 in. long. A batea or a large watch glass may be used as a substitute for a plaque.

Procedure. The sample, if dry, is first wet down carefully, taking pains to prevent skin flotation. The wet pulp is then swirled vigorously to get the slime in suspension, next more slowly to let all granular material settle, after which slime is decanted. This operation is repeated until all slime is removed. Thereafter the elements of a vanning operation are threefold, *viz.*, (1) stratification as in panning, (2) throwing the lower stratum (heavy concentrate) to one edge of the plaque while the upper stratum remains nearer the center, and (3) washing the upper stratum to and over the side of the plaque away from the head of concentrate. Stratification is effected by simple swirling of the pulp by a horizontal rotary motion of the plaque. In order to throw up the head of concentrate the plaque, held on opposite edges in the two hands, is moved as in swirling with one hand while the other describes, at each revolution, a small vertical circle, say, 1 in. in diameter, in a clockwise direction, moving downward more rapidly than upward. The swirling motion keeps the upper stratum in suspension while the lower stratum hugs the surface; hence as the plaque moves away from the operator the heavy material moves with it, but it moves from under the gangue in suspension. The rapid downstroke drops the plaque from under the heavy mineral and when the latter again reaches the plaque surface it rests at a point farther away from the operator than before. The head of concentrate is, in this wise, made to travel up onto the edge of the plaque away from the operator while the lighter sands remain nearer the center. Horizontal separation is continued by imparting a gentle swirl that moves the water only, and giving the plaque a smart shake at the time that the swirling water is traveling away from the head of concentrate. In this way the sand is washed down-slope toward the operator by film-sizing action (Sec. 11, Art. 30). Some operators manipulate the second phase of the separation so as to draw the head toward them and wash tailing off the far side. Others throw up the head by simple swirling with one hand and jarring the side of the plaque at each revolution against the heel of the other hand. In the latter case the mechanics of the horizontal separation is different, but the result is the same. This method is easier to learn than the other, but is very tiring, if much vanning is to be done. With a vanning shovel the head is thrown up by a slight side fillip on the backward stroke of the swirl.

Principal uses of the vanning plaque are in examination of finely ground mill products, and in assaying, particularly in CORNWALL to assay tin ore. Vanning has the advantage over a chemical assay that it gives some idea of the amount of middling grains and of the size of the free-mineral grains. It has been largely superseded in Cornwall tin assaying by chemical methods, but for many years it was the principal, if not the only, method of assaying used in that district. It had, of course, the apparent advantage that it indicated only recoverable tin, *i.e.*, free cassiterite of a size that could be won by gravity concentration, and this was all that most millmen were interested in, but careful experiment show that skilful operators reported discrepant results on the same sample and that none, of course, checked the chemical assay.

Shaking tables of laboratory size, with interchangeable decks for coarse and fine feeds, may be purchased. Results obtained with small tables are substantially the same as those obtained with full-sized machines.

Laboratory tables should be set up with variable-speed drive and with provision for making more than the usual number of splits of the discharge. Much information can

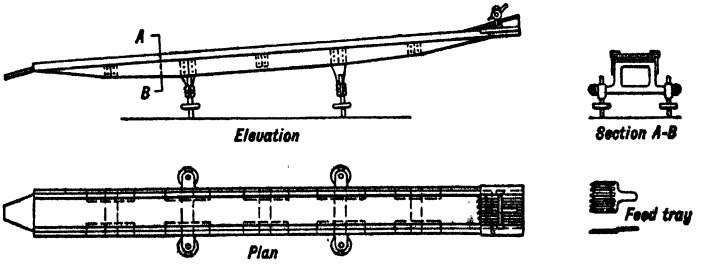

FIG. 149. Laboratory film-sizing table.

be gained by microscopic study of products in addition to the assay. RELATIVE CAPACITIES of small and full-scale tables are best established by a series of tests on the two machines with the same feed, but a fair approximation can be made by multiplying the capacity of the small table by the ratio of deck areas. The capacity of the large table will usually exceed somewhat the figure thus obtained. Testing for amenability to table separation is made only when the decision, based on specific gravity differences or sink-float tests, is close.

Agglomerate tabling; see Sec. 12, Art. 30.

Vanners and buddles. Performances can be approximated by use of a shallow trough, 3 or 4 ft. long and 8 to 12 in. wide, with a bottom of planed board, ground glass, linoleum, or the like, resting on adjustable supports.

A more elaborate form (designed by H. S. Munroe and made by Eimer & Amend, N. Y., Fig. 149) consists of a strong metal frame about 3-in.×3 or 4-ft. in which flat plates of pine, maple, slate, glass or other material may be interchangeably secured. Inclination is adjusted by leveling screws, and amount of water by a dial cock to effect the desired separation. A portion of wet ore is gradually pushed under water jets at the head of table, care being taken not to feed too fast. After 2 or 3 min. the feed is interrupted and material on the table is washed 2 or 3 min. until most of the tailing has run off. The tailing pan is then removed, and middling and concentrate are successively washed off with a jet of water, into separate pans. By making at first a large proportion of middling, clean concentrate and low-grade tailing may be secured. Next wash the middling by itself, varying the amount of water and inclination of table to suit.

Performance of the laboratory table gives no direct information as to the capacity of mill-size machines, except in so far as it shows separation to be difficult or the reverse. See also *27 A 76*.

Sink-float tests are made for plant-control checks, for sorting in sizing-sorting-assay tests (Art. 21), for so-called washability tests, *i.e.*, tests for amenability to standard gravity concentration procedures, and to test ores for amenability to the sink-float process itself. Heavy liquids are ordinarily used for the first three purposes (Art. 20); the process test is made with typical liquid-solid suspensions (Sec. 11, Art. 28). Table 68 gives properties of various proved suspensions.

Table 68. Properties of suspension (*after DeVaney and Shelton, RI 3469R*)

Material	Hardness mohs	Sp. gr.	Maximum sp. gr.	Resistance to corrosion	Method of cleaning
Sand	7	2.65	1.8	High	
Clay	2 to 2.5	2.0 to 2.6	circa 1.6	High	
Magnetite	6	5.1	2.55	High	Mag. sep.
Galena	2.5 to 2.75	7.5	4.3	Oxidizes	Tabling
Ferrosilicon	59 *a*	6.8 *b*	3.5	Slight oxid *c*	Mag. conc.
Lead	1.5	11.3	6.2	Oxidizes *d*	

a Rockwell.
b 15% SiO_2.
c Oxidation reduced by addition of lime.
d Addition of $S^{=}$ helps to prevent oxidation.

Suspensoid process. Testing an ore for amenability involves both determination of the separation that can be made and finding the suspensoid that will perform best. The first test is easy; the second is probably beyond the scope of laboratory procedure in the present state of knowledge of the process.

Test for separation consists in making up a suitable suspensoid, placing it in a separating tank; feeding to it sized, washed ore in an amount that will produce a float 3 or 4 grains deep; stirring sufficiently to permit separation, allowing a few minutes thereafter for stratification, then skimming float, screening out both float and sink from medium, washing each thoroughly with water on a screen, drying, and assaying. Maximum size of feed depends on dissemination of valuable ingredient in the crude, and is probably most quickly determined by a preliminary sizing-sorting-assay test; the process itself imposes no practical limit. Size range of feed is not as yet established on a fundamental basis; empirically it is about 2~3/8-in., and 3/8-in.~10-m., or about 5 times the smaller diameter; the closer the sizing the better the mill operation.

Apparatus may be anything from a bucket or tub with hand screens to the elaborate small pilot set-up (Fig. 150) described in the American Cyanimid Co. catalogue, in which the separating element is the cone *A*, 20-in. diam. with 70° vertex angle, with a 6-in. cylindrical rim. The cone is truncated near the apex (at 2-in. diam.) and flanged to the down-leg of 2-in. air-lift *C* which delivers sink through splash-head *D* to the sink side of low-head screen *E*. Float overflows the cone through lip *G* onto the other side of *E*. Medium drained from the products at the feed end of *E* combines in hopper F_1 and feeds through leg *J* to 2-in. air-lift *H* and thence through splash-head *K* into medium-funnel *L* carried on column *N*. Medium (new and return) flows from *L* into *N* through slots in the wall of *N*, these slots being of greater combined area than the inner cross-sectional area of *N*. Column *N* extends almost to the bottom of the cone and is open at the lower end; it is rotated slowly by geared motor *O* and carries scrapers to sweep down sediment from the sloping wall of the cone; it is perforated throughout its length with 1/2-in. holes of an aggregate area slightly less than that of the inner cross-sectional area of the column. Pressure on the air-feed lines to the air-lifts ranges from 5 to 10 lb. per sq. in., according to the requirements of the operation. Feed is introduced over the rim of the cone on the side opposite *G*. Mean capacity is about 500 lb. per hr. Results of tests in this plant are given in Sec. 11, Table 94.

Preparation of suspensoid medium. The medium liquid is in all cases (as of 1943) a dilute aqueous solution. The solid is that one of those of Table 68 (it might well be some other) which will float the heaviest material that it is desired to carry over, and which will have the desired density without too great dilution; dilute suspensions require too much agitation to maintain them, and vary too much

in density from top to bottom. Size of the dispersed solid is determined by the settling rate of the suspension and the permissible variation in specific gravity throughout the depth; size also controls the apparent viscosity of the suspension and through this, the time required for test material to sink or float. It is desirable to have a suspension in which specific gravity changes negligibly during the time of test; such suspensions have almost immeasurably small settling rates. A galena suspension having a specific gravity of 3.5, with a change in specific gravity of 0.01 after 1 1/2-hr. standing may be prepared as follows: Charge a laboratory ball mill with <65-m. galena, water, and 1/2- to 3/4-in. balls. Run 24 hr., then discharge the contents over a 1/4-in. screen into a pail. Thicken to a density of 3.5 by settling and decantation of supernatant liquid. Stir the thickened suspension and allow it to stand for 45 to 60 min., then siphon off down to within an inch of the material settled in the bottom. Thicken the material siphoned off to proper density. No difficulties due to high viscosity were encountered in separations using this suspension. Similar procedure applies to ferrosilicon and magnetite. Dispersing agents may be needed in some instances (see Sec. 12, Art. 8).

The principal difficulty in suspensoid sink-float operation is maintenance of the medium. Both light solid and salts from the ore enter the medium; the solid lowers the specific gravity, and the salts may affect dispersion of the medium solid. This matter is difficult to investigate on a laboratory scale because it results from a gradual build-up in circuit. Consequently it is normally left for operation to uncover, with the result that early operation is likely to become mill-scale experimentation unless preceded by fairly large scale long-continued pilot-plant work.

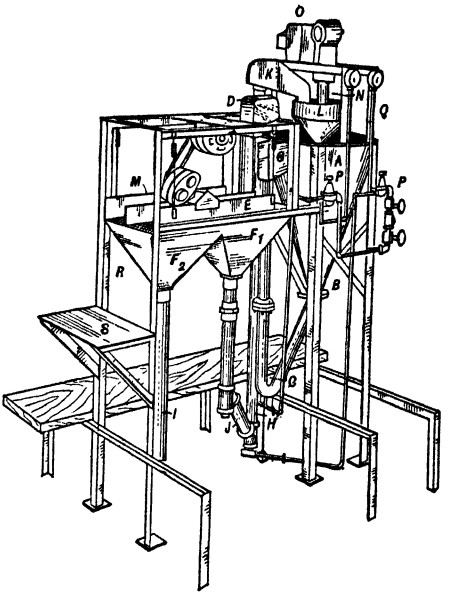

FIG. 150. Laboratory suspensoid sink-float apparatus (*after American Cyanamid Co.*).

Washability tests, similar to those described for coal (see Art. 21), may be made with these suspensions on ores. Table 3 shows the result of such a test on a Tri-State zinc ore. Their interpretation parallels that of the washability tests on coal and need not be repeated.

Magnetic concentration. For small-scale tests for permeability, to remove iron introduced in grinding small samples, or to remove magnetite from pan concentrate and the like, a small electromagnet such as that shown in Fig. 151 is satisfactory.

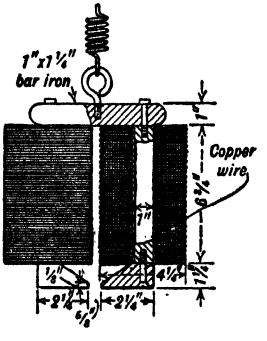

FIG. 151. Electromagnet for laboratory testing (*after Richards*).

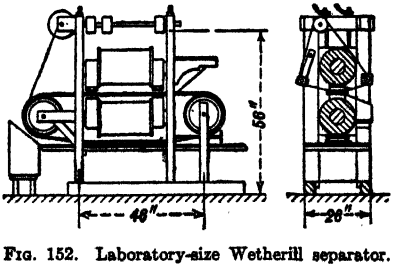

FIG. 152. Laboratory-size Wetherill separator.

Cores and pole pieces should be made of soft iron. The magnet shown, when wound with 5,000 ft. of No. 21 cotton-covered copper wire on each pole, making a total of 6,760 turns, carries a maximum of 0.8 amp. at 50 v. without undue heating. For continuous tests the small Wetherill-type machine shown in Fig. 152 is useful. Each magnet carries 100,000 ampere turns and with proper rheostat control can be used to treat minerals of both low and high permeability.

Davis magnetic-tube concentrator (*Bul 9 MSM*) is useful for concentrating finely crushed ferromagnetic minerals. It consists (Fig. 153) of the C-shaped electromagnet *A* and a glass tube *B* set between the poles at 45°. The tube has the shape of an air condenser with the wide end used for feeding and the narrow end for discharging through a rubber hose, clamp-fitted for control. An upper side arm, similarly equipped with hose and clamp, admits water to the tube.

Procedure. Place 5 to 10 gm. of <100-m. sample (material as coarse as 8-m. may be used) into tube *B*, filled with water, as it rests between pole pieces. As material settles, the upper end of the tube is closed with a stopper. When settled, the magnetic material held firmly to side of tube is washed by passing water through and by moving the tube axially a few inches and at the same time rotating it through a small angle. The wash water, containing tailing, is collected.

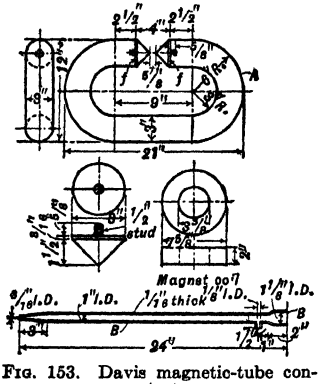

FIG. 153. Davis magnetic-tube concentrator.

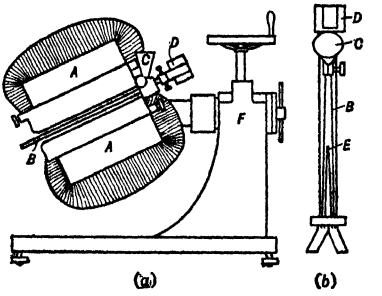

FIG. 154. Franz isodynamic separator.

Franz isodynamic separator (*153 A 565*) consists of an electromagnet *A* (Fig. 154, item *a*) with pole pieces 10 in. long, so conformed as to give an air gap $^3/_{16}$ in. wide at the narrowest place, enlarging to about $^1/_2$ in. at the widest side, and a vibrating chute *B* (Fig. 154, item *b*) on which material to be separated is made to flow from a feed bin *C* by the action of a vibrator *D*. The chute is shallow and of rectangular cross-section, broadened toward the discharge end; it is divided longitudinally by a partition *E*, which divides the flowing material, sidewise segregated by the combined actions of gravity and the magnetic field, into two streams. The magnetic system is carried on a universal mounting *F*, so that it can be oriented in any direction with respect to gravity. The operating variables are magnetic field strength, transverse and longitudinal slopes of chute, and rate of feeding.

The separator operates on material ranging in size from 35- to 600-m. and is capable of diamagnetic separations of materials with 0.3×10^{-6} negative mass susceptibilities (Sec. 13, Art. 1) from less para- or diamagnetic substances. The reported success is ascribed to the specially designed pole pieces, which give a strongly convergent magnetic field, exerting a constant force on a particle of given susceptibility regardless of its position in the field. Gaudin (*ibid.*) has been able to establish differences in magnetic response of some of the more common sulphides.

Flotation Testing

The purpose of flotation testing may be (*a*) to investigate the amenability of an ore to flotation, (*b*) to determine the best method of treatment, (*c*) to investigate a flotation agent, and (*d*) to investigate a process.

Most testing for amenability has been performed with laboratory-scale models of mill cells. The bubble machine (see p. 176), originally designed as a research tool, yields so quickly information of such high diagnostic value that it rapidly pays its way.

Laboratory Flotation Machines

Test tube (or a wide-mouth bottle) may be used for crude, small-scale agitation-froth tests, agitation being effected by hand shaking, and froth separated by introducing an amount of water sufficient to overflow it. A SEPARATORY FUNNEL may be substituted (*111 P 122*), in which case tailing is withdrawn from the bottom without dilution.

Mayeda cell (Fig. 155) for preliminary testing is readily controlled and yields reasonably reproducible results. It is made of glass (Eimer & Amend). The motor-driven stirrer is placed in leg *A* in such vertical position as will induce circulation in counterclockwise direction, as shown in the figure. In operation the cell is placed over a 1,000-cc. beaker, which collects overflowed froth. Capacity is 5 to 10 gm.

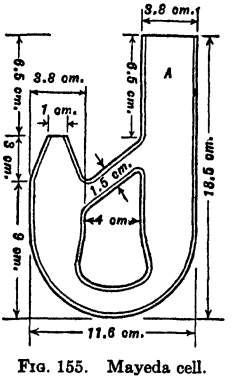

FIG. 155. Mayeda cell.

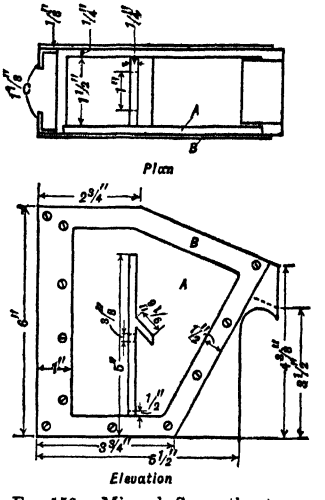

FIG. 156. Minerals Separation-type machine.

Minerals Separation-type machine (Fig. 156) is easily constructed in any moderately well equipped shop. The form shown is fabricated from a block of laminated Bakelite and has one side fitted with plate glass *A*, held on by brass strip *B*, to permit observation. Lugs *C* fit over a tongue on the stand. A laminated-bakelite stirrer is driven by a friction-wheel-type of variable-speed laboratory motor agitator having a speed variation of 100 to 3,000 r.p.m. The machine shown takes an ore charge of 50 gm.

Subaeration cell (Fig. 157), described by Dietrich *et al.* (*RI 3328*), comprises a bakelite box *A*, a stainless-steel grid *B*, steel impeller *C*, and hollow shaft *D*, all mounted on a 2×4-in. post *E* carrying the screw adjusting device *F* for spacing the impeller away from the cell bottom. SPEED is about 1,800 r.p.m.; cell CAPACITY, 250 gm. of ore.

All-glass pneumatic cell (Fig. 158) having a capacity of 5 to 20 gm. was described by Knoll and Leaf (*11 IECA 510*). Air flow to the cell is controlled by the arrangement described by Oberbillig and Fahrenwald (*22 MJ 1, 7*). Any air source capable of delivering 4 to 10 liters of clean air per min. is used. A U-tube mercury manometer with a constriction orifice between the arms is used to measure pressure; the constriction is of such size as will produce a 5- to 6-cm. reading with good bubble action in the cell. The adjustable hose clamp *A* is used to regulate air volume. The standard No. 3 sintered-glass disk sealed in the column gives good bubble action and permits of cleaning with sulphuric acid-dichromate mixture. In operation, overflow of froth is maintained by additions of solution at the rate of 2 to 2 1/2 cc. per min. Table 69 shows typical results obtained with this cell.

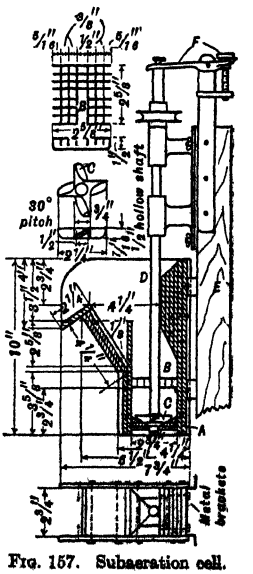

FIG. 157. Subaeration cell.

Tilting pneumatic cell (*87 A 255*) consists of a glass tube *A* (Fig. 159) equipped with a peripheral discharge launder *B* (of laminated Bakelite), held over an air basket *C* (details in Fig. 159*A*) containing a perforated rubber mat or 100-m. screen *D*, through which air is forced, and a movable stand *E* on which is placed a receptacle receiving overflow. The stand *E* may be raised or lowered by moving

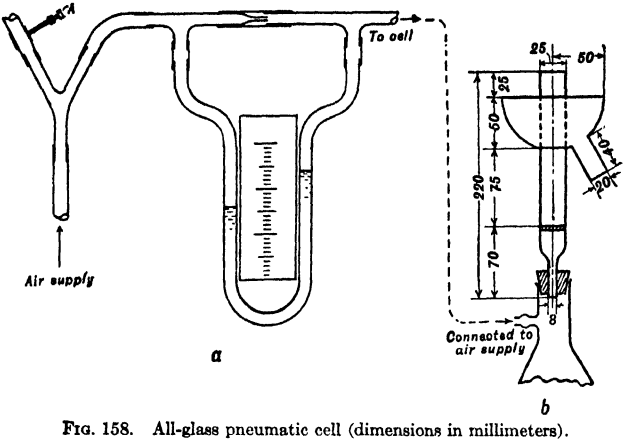

FIG. 158. All-glass pneumatic cell (dimensions in millimeters).

collar *F* which is locked by screw *G*. The tube is held in the basket by a rubber washer *H* under the action of the screw collar *I*. The screen *D*, held between two rubber gaskets, is located between the upper and lower halves of the basket. The basket is held by a side arm passing through a brass tee and locked in any position by action of the knurled ring *J*. The cell has a capacity of 25 to 50 gm. of ore.

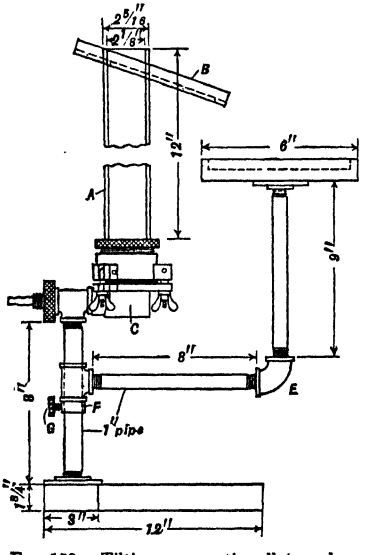

FIG. 159. Tilting pneumatic cell (see also Fig. 159*A*).

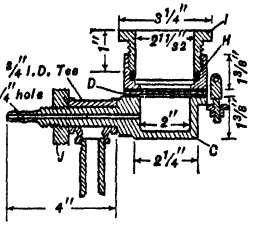

FIG. 159*A*. Detail of air basket for apparatus of Fig. 159.

Laboratory-size models of various mill cells are available from the manufacturers of the commercial units. Such cells have a capacity of 500 to 2,000 gm. of ore.

Bubble machine consists of a camera so mounted on an optical bench (see Fig. 84) as to form an image on a ground glass (or a photographic plate) of the performance at a polished-mineral surface of a captive air bubble, when mineral surface and air bubble are immersed in a liquid contained in a bubble cell preferably all-glass with no cemented joints, measuring 1×4×4-in. inside, mounted on stage *A* of the bubble-cell holder (Fig. 160, item *a*), and there held in position by means of metal clips *B*. The stage, which may be raised or lowered by means of the sub-stage screw *C*, is guided by a beveled block operating in a beveled track cut in ring *D*. Annular ring *D* fits snugly and is free to rotate in a recess cut in the cell holder, and is confined therein by screws *E*. The bubble

Table 69. Flotation results obtained in cell, Fig. 158

Solution	Concn. of reagent, p.p.m.	Galena, gm.	Pulp density, %	Recovery, %	Galena per cc. overflow, gm.
Water		5.00	10	10.2	0.011
α-Naphthylamine	170	5.00	10	40.0	0.057
	170	10.00	20	22.2	0.092
	170	20.00	40	23.1	0.145
	340	2.00	4	57.8	0.020
	340	5.00	10	60.4	0.061
	340	10.00	20	63.7	0.162
	340	20.00	40	57.8	0.327
Potassium ethyl xanthate	25	5.00	10	75.9	0.118
	25	10.00	20	87.5	0.199
	25	20.00	40	87.6	0.319
	50	5.00	10	82.2	0.117
	50	10.00	20	87.5	0.208
	50	20.00	40	72.0	0.351
	100	5.00	10	84.5	0.094
	100	10.00	20	85.8	0.228
	100	20.00	40	92.7	0.501

holder (Fig. 160, item *b*) is held in V-notch *G* by clip *F*, mounted on a block *H* which is moved sidewise relative to block *I* by action of rack and pinion *J*. Block *I* is moved vertically on a 5/8-in. rod *K*, equipped with a rack, by the action of pinion *L*. Rod *K* is mounted on a beveled plate *M* which may be moved along the optical axis by pinion *N*.

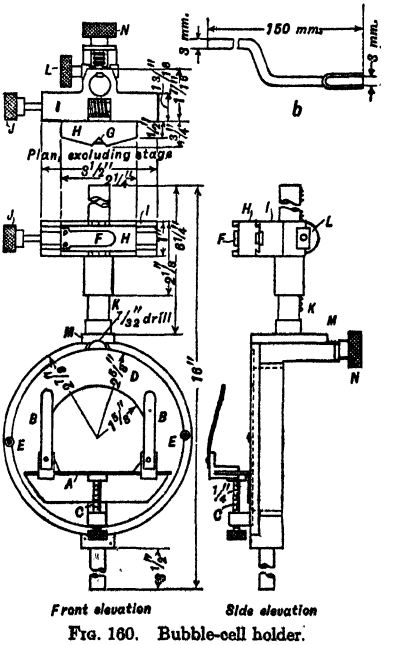

FIG. 160. Bubble-cell holder.

Testing Procedure

General considerations. Flotation is still an art of which but few of the basic rules are known. Established operations proceed reasonably smoothly so long as conditions can be kept constant. Plant remedies are mostly mad scrambles to return to normal conditions; they fail miserably in most cases when this is impossible. With such a background, much of flotation test procedure is of the same cookbook nature, and favorable results, when the problem is in any way out of the ordinary, are largely dependent on the law of probability.

The primary reason for this state of affairs is that most flotation testing is done by empiricists, whereas flotation is a complex physicochemical process, the controlling phenomena of which lie in the relatively new field of surface chemistry. Here most of the laws are in the making; few have yet got into the books in workable form; and the books are not in the standard curricula. Progress has been as rapid as it has because Edisonian search by large numbers is bound to turn up something, and further because the soaps and sulphydrates are such powerful and generally active reagents that they will ordinarily do something despite the worker.

Basic rules of flotation. A half-dozen basic rules are known to a dependable extent.

1. With the exception of a few hydrocarbon-containing minerals, an air bubble in water will not adhere to a mineral particle unless the particle is coated with a hydrocarbon-bearing film. It follows that when unwanted particles appear in the froth, except when carried mechanically and not attached to air bubbles, they are so coated; and that when

wanted particles fail to appear, they are either not so coated, or they or the air bubbles carry additional coatings.

2. Formation of hydrocarbon coating on nonhydrocarbon-bearing minerals is, with a few exceptions, the result of a chemical reaction, normally of exchange type. The known exceptions are graphite, sulphur, molybdenite, realgar, bismuthinite, and stibnite. These minerals can be coated by neutral oils. Certain metallic minerals are coated by amines by an addition-type reaction. All other minerals require ionizable hydrocarbon-bearing collectors.

3. In flotation pulps, dispersed particles are water-wetted; in all cases where their surface condition is known, the surface is ionized; they will not adhere to an air bubble. Nondispersed particles may have ionized surfaces also; if they have, they will not attach to air bubbles. Particles flocculated without the intervention of a gas or a second liquid phase may have either ionized or nonionized surfaces. In the former case solubility will be high enough to permit leaching away enough ions for a test; in the latter case the mineral will not, in all probability, react with any collector.

4. The surface composition of minerals with surfaces ionized in a flotation pulp can be changed substantially, by ion exchange, with any ion, organic or inorganic, present in low or high concentrations, which forms with one of the ions of the mineral a compound less soluble in the pulp than the original mineral. Minerals with un-ionized surfaces cannot be changed by ion exchange with an ion present in low concentrations; they may be changed by exchange with high concentrations of introduced ions; they can frequently be changed by low concentrations of oxidizing or reducing agents.

5. An ore pulp is a veritable chaos of ions, collected by the water from the atmosphere; from its sources, immediate and remote; from the ore; and from the mill. It is an important function of the conditioning agents to bring order; by suppressing some ions, and/or supplying others with such powerful beneficial effects that they override the harmful ones.

6. All or substantially all of the actions at particle surfaces in a flotation pulp are ionic in character and hence obey the laws of mass action. The constants for the surface-reaction zones are unknown, as are also the concentrations of reactants there. But from a practical standpoint the direction of reactions can be predicted effectively by considering the bulk concentration of the reactant in solution, and can, therefore, be controlled by control of this concentration.

It follows from these rules that intelligent flotation testing is more of a research job than a routine testing job. As such, it necessitates careful and detailed recording, during the course of the test, of every feature connected therewith, special note being made of all conditions surrounding any unusual performance. Although routine procedure can be standardized to the point where different operators can check each other on duplicate tests, it should not be concluded that this reproducibility represents control through complete knowledge; the frequency of occurrence of the unexpected is still great enough to contradict such a conclusion.

Primary factors affecting flotation are: (1) the mineralogical character of the feed; (2) size distribution of the feed; (3) method of comminution, and the time elapsed between each successive size reduction; more generally, the previous history of the ore from mine to testing laboratory; (4) pulp dilution; (5) the amount and character of organic and inorganic material put into solution by the ore; (6) the amount and character of added flotation reagents, the order of addition, the time elapsed between additions, and the nature and duration of the operation practiced between additions; (7) the flotation machine; (8) the degree of agitation; (9) the amount of added air; (10) the duration of treatment at each stage; (11) the temperature.

Records of tests should be as complete and explicit relative to the above factors and to the indices of their effects as it is possible to make them. Effects are indicated by volume and character of froth; amount and kind of solid load; degree of dispersion of the pulp; rate of flotation, and finally recovery and grade of concentrate. Records of tests are best kept on a printed or mimeographed form that calls specifically for the information desired. The form should include at least the following items: TEST: number, date, purpose. FEED: origin, history, approximate mineral composition, sizing test, assay, record of microscopic examination, weight. MACHINE: type, size, structural materials in contact with pulp. WATER: source, pH. REAGENTS: name, quantity, order of adding, method of mixing, duration of mixing period; pulp density, temperature, and pH during mixing. ROUGHING (or concentrate-making period): duration, degree of agitation or aeration, pulp density, temperature, and pH; character of froth, including texture, size of bubbles at water line and overflow level, elastic or effervescent nature of bubbles, consistency of froth mass, persistence, mineralization, pH, percentage of solids. CLEANING (middling-making period): collect the same data as in roughing. ROUGHER TAILING: pH, degree of dispersion, relative rate of settling, temperature, density. CLEANER TAILING: the same. ASSAYS AND DERIVED METALLURGICAL RESULTS. NAME OF OPERATOR. It is well to define the meaning of certain of the descriptive terms. The following definitions are useful. TEXTURE: Examine the "grain" of the froth. Mental reference to the grain of a rock or other nonhomogeneous mixture will

help in choosing the proper descriptive term. The texture should be described as *even* when all or a great majority of the bubbles in a given horizontal line against the glass walls of the testing machine are of approximately the same size; *uneven* describes the reverse condition. Texture should be described as "fine" when the average diameter of bubbles at 1/2 in. above the water line is 1/8 in. or less. CHARACTER OF BUBBLES: *Elastic* indicates that the surface bubbles in the machine are relatively persistent, that they may be deformed considerably without bursting, and that they elongate markedly in overflowing; *effervescent* bubbles burst with considerable violence soon after reaching the surface layer. Quality is *viscous* when patches of the froth act almost as solids and the body of froth is sluggish in the cell; *tender* describes a homogeneous fluffy froth that is active on the surface of the cell. MINERALIZATION is best determined by examining a film under a low-power (15 to 20×) microscope. *Heavy* describes the mineralization of a film that is crowded with solid, opaque, and draws back slowly when punctured; *light* describes the complete reverse of this condition; *medium* describes a wide intermediate range. *Gangue* and *mineral* indicate the predominating mineral in the solid load. PERSISTENCE: *High* describes an overflowed froth that shows little or no tendency to break down after standing, say, 2 or 3 min.; *medium* describes a froth that breaks down spontaneously to about one-half its volume in 1 or 2 min. after removal; *low* describes substantially complete breakdown in 1 min. SETTLING RATE of tailing gives a pseudoquantitative measure of degree of dispersion. It is best measured by allowing 1 min. to elapse after flotation ceases, then measuring the distance from a fixed point on the side of the machine to the top of the subsiding solids, and measuring again after the lapse of 1 min. For more direct observation, examine a sample at 100×, using dark-field illumination.

An experienced operator can keep such a record on a prepared form with very little more time than is required for the test itself; it serves as a guide to methodical and careful observation; and it makes it possible for persons who have not seen the test to visualize the performance and interpret the results. There is definite correlation between many of the indices and the metallurgical results; when it does not appear, it is time for the director of test work to begin inquiries; there is a discovery of some kind in the making.

Preparation of a machine for testing is solely a matter of cleaning. Procedure in cleaning varies with the materials of construction and with the previous use of the machine. In general, scrubbing with a strong solution of sodium carbonate, followed by a blank run with finely ground ore, a neutralizing wash with dilute hydrochloric acid, and another blank run with finely ground quartz, will clean up the usual metal machine. If previous use involved a hydrocarbon oil, a preliminary wash with benzene, followed by alcohol, should be given.

Reagent additions may be made in a number of ways. Mohr pipettes give accurate control of reagents; their chief drawback is the difficulty experienced in filling them under hurried test conditions. Calibrated medicine droppers are useful, when the volume to be added is neither too large nor too small; 5 to 20 drops is a good range. Calibration changes with the surface tension of the liquid, hence droppers must be calibrated for each liquid with which they are to be used. Some operators prefer to use a pendent drop formed on a wire; a straightened paper clip, one end of which is embedded in a cork of suitable size, serves admirably; it must be calibrated for different liquids. Luer tuberculin syringes (*140 #11 J 55*), which are available in sizes from 1/4-cc. to 50-cc., are easy to control; 1 @ 2-cc. and 1 @ 10-cc. covers the necessary range; interchangeable stainless-steel needles ranging from No. 15 (large) to No. 26 (small) are available for them. Solid reagents are best added in solution, if possible; otherwise they are weighed in. All quantities are most conveniently measured in metric units; tables may be prepared giving conversion from cc. or gm. of reagent to lb. per ton of ore.

Preparing ore charge. The method depends upon the ore, the nature of the test, and the nature of the reagents. General practice is to crush the original sample dry through 10-m., and follow by wet grinding in a ball mill of suitable size for such time as produces the desired fineness. Although this procedure does not parallel mill practice, where ball-mill feed is rarely less than 1/4-in., it is adopted because laboratory mills cannot be fed at this size and still make a product free from oversize and undue slimes. The procedure thus exposes a larger surface area of mineral to the air than is exposed at the same point in mill practice.

With easily oxidized ores, such as those high in pyrite or pyrrhotite, this exposure is detrimental. Thus (*82 CIMM 318*) galena was mixed with (*a*) silica, (*b*) pyrite-silica, (*c*) pyrrhotite-silica, and (*d*) marmatite-silica, dry ground, split into samples, a part wetted and all samples permitted to stand for 48 hr. The silica mixture (*a*) was not affected, as evidenced by flotation tests. The iron mixtures showed decreased recovery of galena and required more xanthate for flotation; the pyrrhotite-silica-galena mixture gave poorest recovery. With such ores, therefore, grinding should follow crushing immediately.

Although dry grinding may be practiced with impunity with some ores, it is generally unsatisfactory. Tests on dry-ground samples often give recoveries 10 to 20% lower than those on wet-ground samples (*RI 3328*). It seems advisable, therefore, to practice wet grinding, simulating mill conditions, even though it can be established in particular cases that wet grinding produces no essential changes in results.

Ball-mill grinding procedures vary. BATCH GRINDING is usual unless a particular mill condition is being simulated. Capacity of a batch mill should closely approximate that of the flotation cell; for mill-index tests this ranges from 500 to 2,000 gm. The method of flotation testing may also control the charge, as when concentrate cleaning is contemplated for ores with a large ratio of concentration, since better results are obtained

with the larger charges. Fahrenwald (*Deco Index 112*) recommends choice of mill and grinding conditions such that reduction to flotation size requires 10 to 15 min. This is within the range of ordinary grinding time factors. Many operators simply determine the time required for a particular ore to produce the required grind, making no attempt to keep the grinding time within limits. Standardization of pulp dilution, ball size and load, and speed of mill is invariably practiced. In many laboratories the grind is performed in pebble mills to avoid introducing unknown amounts of iron into the sample, and a ball-mill grind is run in parallel to study the effect of iron. Laboratory ball-mill grinding introduces more iron than is introduced in mill practice; but laboratory pebble-mill time-factor is definitely longer than plant time-factor. Choice depends on the ore and the purpose of the test.

Distilled water is commonly used in laboratory grinding. Experience has shown this to be the safest practice in preliminary and general testing because mill waters and tap water contain soluble and insoluble substances (see Table 70), in amounts varying from day to day, which materially affect flotation results. The effect of acidity or alkalinity of ordinary water may be overcome by the addition of a suitable neutralizing agent. The effect of the soluble and insoluble substances is not so readily counteracted, for it may not be detected and if detected may not be understood; yet these materials may produce tremendous changes in results. Small amounts of ferric hydroxy sol can activate quartz so that it can be collected by oleic acid. When application of test results to mill operation is contemplated, final testing should be done, using water available at the mill site. In testing nonsulphide ores with oleic acid as collected, distilled water should always be used; hard waters can be softened to substantial equivalence with lime-soda or (preferably) zeolite (*RI 3370; 3437*). If the soluble salts from the ore are known to have an adverse effect on flotation results, the ground ore should be washed with distilled water, and distilled water used in flotation.

Table 70. A troublesome mill water in the Tri-State district (*RI 3149*)

Constituent	P.p.m. *a*
Total dissolved solids	5,332
SiO_2	20
Fe^{++}	4.5
Fe^{+++}	25.5
Ca	578
Mg	258
Zn	545
CO_2 (free)	15.6
SO_4	3,424
Cl	8.6
Total acidity as H_2SO_4 (due to free acid, $FeSO_4$, $Fe_2(SO_4)_3$ and $ZnSO_4$)	854
*p*H	<3.0

a Parts per million parts of water, or milligrams per liter.

A somewhat oxidized lead ore containing small amounts of sphalerite, siderite, and pyrite in a gangue principally dolomite, with smaller amounts of calcite and glauconite, when ground to flotation size with distilled water, yielded a solution of the following salt content: 17.3 p.p.m. of bicarbonate alkalinity as sodium bicarbonate; 44.3 p.p.m. of lime; 56.0 p.p.m. of magnesia, and 86.4 p.p.m. of sulphate (*RI 3214*). These concentrations are not excessively high; subsequent testing showed them to have little effect on results in sulphide flotation.

If reagents are added to the ball mill, it is wise and informative to examine the pulp and compare it with a similar grind using only distilled water. The *p*H of a filtrate of the product should be determined. It should also be examined under the microscope to determine extent of dispersion; if flocculation is noted, its selectivity, if any, should be ascertained. Simple settling tests and the effect thereon of additions of lime, sodium silicate, etc., are recommended, for the yield in information is a better than fair return for the investment in time.

Laboratory closed-circuit grinding, simulating practical operation, comprises a series of short-period grinds, followed by screening or (preferably) classification to remove the finished product. The unfinished material of each stage is returned to the mill together with enough new feed to compensate for the loss in weight due to removal of finished product. The unfinished material which constitutes the circulating load may be controlled by the duration of the short-period grind.

Other laboratory grinding techniques may be used according to the plant operation that is being simulated.

Testing mill pulps. When the test sample is already ground, *i.e.*, a mill pulp, it should be tested as soon as possible because its state of dispersion may change with time and changes in temperature. It should not be dried prior to test and should be kept in a container, preferably glass, which does not introduce appreciable amounts of foreign ions into the pulp; this is especially important with nonsulphide pulps.

Pulp dilution in flotation testing usually ranges from 20 to 25% solids by weight, though pulps containing as high as 50% solids are sometimes used. Pulp dilutions ranging from 6 to 12% are used in cleaning operations (see below).

Flotation procedure varies with the type and design of machine. The following is a composite which may be altered to suit a particular machine. Ball-mill pulp is transferred to the flotation cell, which is in operation, with as little water as possible. If the cell is equipped with an air valve, this should be closed. If a conditioning agent, other than an activator or depressant, is used, it is now added. After a $\frac{1}{2}$-min. interval of agitation, other conditioning agents, if any, are added, followed by a 2-min. period of agitation.

Collector is added next, immediately followed by the frother. After about 2 or 3 min. of agitation, water is added to bring pulp up to proper dilution, at which time the pulp level is 2 or 3 in. below the overflow level. The air valve, if any exists, should now be opened.

If stage collection is practiced, as is normal in nonsulphide flotation, when slimes are present, collector is added in minute amounts in several stages, each stage being followed by skimming of froth; it is not necessary or usual to agitate for more than 10 to 20 sec. after the reagent additions.

Concentrate is removed with the aid of a paddle until some predetermined time has elapsed or until an end point, as indicated by color changes, loading, etc., is reached. The method of skimming depends on the test; for roughing purposes the froth is scraped deeply, whereas in cleaner operations shallow scraping is practiced. It is helpful, though not necessary, to make provision for continuous addition of water to the cell so that the pulp level remains constant. The added water may contain frother in a somewhat higher concentration than was originally present in the cell.

The procedure described may be used to make (*a*) low-grade concentrate and a clean tailing, by skimming the froth deeply and quickly in the endeavor to produce a low-grade tailing; (*b*) finished concentrate and a relatively high grade tailing by slow, shallow skimming so as to allow maximum cleaning in the froth column; (*c*) a finished concentrate, a middling, and a finished tailing, by shallow, slow skimming to give concentrate, followed by rapid, deep skimming, to give finished tailing.

Grade of concentrate can ordinarily be improved, if poor, by decreasing the rate of froth overflow. This is accomplished by decreasing aeration, diluting the pulp, using less or a less-powerful frothing agent, by eliminating an agent that stiffens the froth, by choosing an agent that is more highly selective, or by the use of dispersing agents such as water glass, quebracho, and certain inorganic salts.

Recovery will usually be increased by increasing rate of froth overflow. This may be done by increasing aeration, increasing percentage of solids, using more frothing agent or a more powerful frothing agent, or adding a froth stiffener. Recovery may also be increased by increasing selection, either by the use of a different collecting agent or by adding a dispersion agent.

Locked test (*RI 3328*) was devised to minimize the in-process middling in batch testing. Fig. 161 gives the flowsheet of a four-batch test using two stages of cleaning without middling regrind. While the flowsheet as drawn gives the impression that the process makes only the two desired products, concentrate and tailing, it is clear that the underflows of stages 4C and 4RC are not changed from middling character simply by routing them to the tailing line. It is less apparent, but nevertheless true, that either the tailings 2S, 3S, and 4S contain middling, or it is cumulated into the 4S middling product, which is also shown routed to final tailing. A truer picture of the operation is given by the dotted lines leading to the product M.

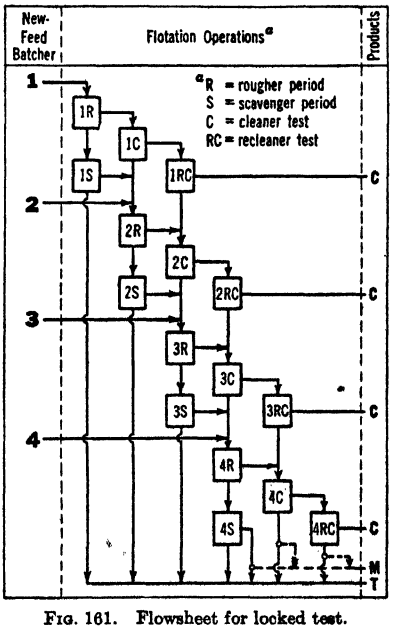

Fig. 161. Flowsheet for locked test.

If the middling is locked middling, it may be returned to the ball mill, provided such return does not introduce difficulties with reagent control and order of addition. Reagent control is difficult at best, because of the introduction of unknown proportions of reagents to each successive batch. This is particularly true of frothers and conditioners, especially if they possess a cumulative effect.

Time required for such a test depends upon the number of cleaning stages and the number of batches; it ranges from 8 to 10 hr. Easily altered ores may undergo sufficient change during such a time as to invalidate results completely. The test bears no resemblance to any mill flowsheet. It is questionable whether in any case it approximates mill results any more closely than the standard batch test.

If differential flotation is to be practiced it may be done by (1) straight flotation separation on the original pulp, removing first one mineral, then after the addition of suitable reagents, removing the second mineral, etc.; (2) first making a bulk concentrate of the two or more minerals, followed by subsequent differential flotation of the bulk concentrate. The effect of changes in particle size upon the results of differential flotation is marked and should be studied.

Oxidized and nonsulphide ores. Heavy-metal sulphide ores are easily handled with the above described procedure. Oxidized metalliferous ores as well as the nonsulphide ores require a more refined technique. If sulphidization is practiced with the oxidized metalliferous ores, the time required for testing should be kept to a minimum since the sulphide coating reverts easily and quickly to the

oxidised form. Flotation prior to sodium sulphide addition followed by sulphidisation of the resulting tailing yields good laboratory results. With the nonsulphide ores close control of *p*H and complete avoidance of heavy metal ions in the circuit should be practiced. A flotation cell constructed of nonmetallic parts is recommended.

Table flotation (Sec. 12, Art. 30) is highly effective on relatively coarse deslimed pulps, and should always be considered when mineral frees at sizes from 10-m. down, particularly if such freedom is complete, as is often the case with residual deposits. Procedure comprises thorough desliming, the use of oils as secondary collectors (Sec. 12, Art. 6), conditioning through the point of oil coating in a thick pulp, dilution, and separation on a surface such as a Wilfley table, where the oiled pulp is spread out in a thin layer, and turned over well to permit oil-air agglomerates to work to the surface and discharge in a cross stream of water. Applicability can be tested in the laboratory with a beaker and stirring rod for oiling and a large watch glass or a pan for separation. Plant practice has been largely on pebble phosphates with shaking tables for separation (Sec. 3, Figs. 52, 53). Other examples reported are calcite from quartz (*RI 3247*) and sylvite from halite (*RI 3271*). Table operation is in no way different from normal (Sec. 11, Art. 22).

Testing for amenability should be preceded by microscopic determination of the approximate qualitative mineralogical composition and state of the ore as regards oxidation. Preliminary examination with a binocular microscope followed by study of a polished section, supplemented, if necessary, by study of a thin section or some fragments with a petrographic microscope, will usually save time and permit much more intelligent prosecution of the actual testing work. If microscopic study shows unaltered sulphide of known amenability associated with the ordinary rock-forming gangue minerals, it is a safe conclusion that the ore is amenable to flotation and actual tests in the machine may be directed rather toward determination of the best method of treatment than toward confirmation of amenability. If miscroscopic examination shows mixed sulphides, that fact will indicate low-grade concentrate and point the way toward differential flotation. If there are signs of oxidation, trouble is to be anticipated and the question of amenability cannot be answered without actual flotation testing. If the examination reveals minerals of unknown amenability, then the following systematic procedure is recommended. This procedure is not to be looked upon as inflexible or complete, but merely as the starting point for what is usually a long and arduous search.

Test-tube testing. The chemical composition of the mineral that it is desired to float is ascertained. A search is instituted to determine whether the anion or cation of the mineral or its surface alterations form insoluble compounds with collector-type reagents (Sec. 12, Art. 3). If the literature does not provide an answer, simple test-tube experiments using solutions of these ions to which are added collector-type reagents may be used. If visible precipitates are formed, evidence of compound formation between the ion and the collector is at hand and confirmatory testing with the bubble machine is in order. The chemical testing should be performed by an operator having a considerable background in chemistry. Should such test-tube experimentation fail to give an answer, as it well might because it assumes the surface condition of the mineral, testing with the bubble machine is the next step.

Procedure for bubble-machine testing. A specimen of the mineral is rough ground to suitable dimensions, *e.g.*, in the range $1 \times 1/2 \times 1/2$-in. to $1/4 \times 1/4 \times 1/4$-in. If the specimen is too small to handle on a polishing lap, it may be briquetted and the exposed surface polished to a high finish on ordinary laps. The laps used in surfacing for bubble-machine testing are cloth-covered aluminum or glass laps, since it has been found that the metal used in customary laps may produce activation of some mineral surfaces. Re-levigated alumina is used for polishing. To test a particle, it is cleaned on the test lap with copious additions of tap water until, when removed therefrom, the surface remains completely wetted by water; if water draws back, the surface is contaminated and should be further polished. The particle is then transferred quickly to a beaker containing a solution of the presumed collector, and is conditioned therein for about 5 min. Beaker and contents are then placed near a stream of distilled water running into and overflowing the bubble cell, and the particle is transferred from beaker to bubble cell, using fire-cleaned platinum-tipped tongs, in such fashion that it never crosses an air-water interface. The outside of the cell is dried and the cell is placed on the stage of the bubble machine. The bubble holder is placed in position with the cup under water and an air bubble is placed on the bubble cup by means of a medicine dropper with tip curved back 180°. The verniers actuating the block in which the bubble holder is held are used to center the bubble relative to the field and particle. A sharp image of the bubble is produced on the ground glass by means of the lens-focusing device. The bubble is then lowered until it touches and is compressed against the particle. It is allowed to remain in this position for about 1 min., then the bubble-holder is slowly raised and the behavior observed on the ground glass. A negative result is obtained when the bubble comes off cleanly, without any evidence of clinging to the surface. If cling is noted, and lack of cleanliness in procedure is suspected, the test should be repeated. If clinging persists, bubbles of smaller diameter should be tried; if the tenacity of cling increases with decrease in bubble diameter, the polished, conditioned mineral particle should be placed under water in a petri dish and the dish put in a vacuum

machine (Fig. 162). The cell is evacuated and the surface of the particle observed using a low-powered binocular resting on the cover plate. Formation of bubbles at the surface of the particle is evidence of the exisistence of a small though definite contact angle. Large contact angles may be measured (Fig. 163) on the ground glass by means of a protractor applied to a base line determined by the extreme points of coincidence of the bubble and of its image mirrored by the particle surface. The angle included between this base line and the tangent at the triple-phase contact point is called the contact angle. The bubble machine test requires about 10-min.; it may be shortened somewhat by filling the bubble cell with collector solution and testing for air-bubble contact therein. When differential flotation is contemplated, particles should be conditioned for bubble testing in the solutions in which it is contemplated to float or depress them as the case may be. If the bubble test is made in

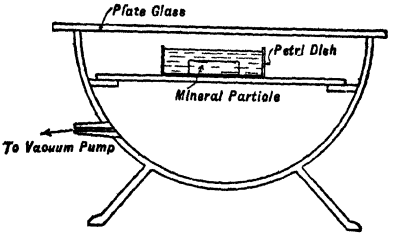

FIG. 162. Vacuum-test machine.

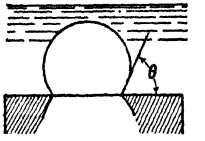

FIG. 163. Contact-angle measurement.

solutions, coating of the surface by sedimentation must be guarded against. The surface may be swept with a captive bubble, or may need to be rubbed with a clean cotton swab or the like. When the collector-coating compound is relatively soluble, as with amines, the contact-angle test must be made in the conditioning solution.

Bibliography. Taggart, Taylor and Ince (*87 A 285*); Wark and Cox (*112 A 189*); Gaudin and Vincent (*A TP 1242*); del Giudice (*137 J 291*).

Confirmation of bubble tests by actual flotation may at first produce poor or completely negative results. These may be due to slime coating of the mineral to be floated, reagent consumption or destruction by soluble substances put into solution by the ore, reagent consumption by the ore slimes, alteration of the surface properties of the mineral by soluble substances, etc. Test procedure should now be directed toward determination of the origin and correction of the trouble. If flotation tests alone had been used as a test of amenability, the same negative result would have been obtained, and the investigator would have concluded that the particular collector used was inapplicable to the ore under test. Hence bubble-machine testing, in addition to eliminating this pitfall, points the way for further testing designed to improve results.

Commonly used flotation agents, together with their function in the flotation cell, are listed in Sec. 12, Arts. 4, 5, 10, 12.

Tests for a method of flotation are in no way fundamentally different from tests for amenability; they differ only in that they are more thorough and exhaustive and should, ordinarily, be carried out on a larger scale. They should start with knowledge of amenability and of one method of treatment, and should comprise investigation of the effect on recovery and grade of concentrate of changes in flotation machine, in grinding, dilution, reagents, temperature, water supply, etc. The bubble machine can be used to advantage in following the effect of changes in concentration and nature of reagents, and in temperature. The following facts should be kept in mind in this testing campaign:

(*a*) In the laboratory the agitation-froth process is easier to control and tests are more quickly run than by the pneumatic process.

(*b*) An ore that can be concentrated in an agitation-froth machine can be concentrated, with certain changes in the accessory details of operation, in bubble-column machines, and *vice versa;* but in general, flotation can be made more intense in the agitation-froth machine, while the bubble-column type is capable of more delicate control.

(*c*) Before a mill is built, the process worked out in the laboratory should be tried out on something approximating mill scale in a pilot plant, especially when the mineral and gangue are close together in floatability, for it then becomes crucial to determine the effect of returned middling.

(*d*) Flotation operates most easily and with greatest leeway on a pulp containing from 15 to 20% solids. On the other hand, power consumption, mill equipment, and reagent consumption are lessened as the percentage of solids in the pulp is increased. A part of the advantage of thick pulps can be utilised by conditioning in thick pulp and diluting to float; this is particularly true when oily collectors are used.

(*e*) Change of reagents in an operating mill may be a serious matter, involving considerable laboratory experimental work and costly interference with mill operation. Hence the reagent chosen should be one of which a supply at a fair price is reasonably assured, and the reagents tried in the testing work should be of this class. Such a list includes petroleum oils, pine tars, coal tars, coal-tar creosotes, xanthates, Aerofloats, thiocarbanilid, fatty acids, some amines, pine oil, cresylic acid, alcohol mixtures in the C_7 to C_{14} range, soda ash, lime, sodium silicate, caustic soda, sodium sulphide, alkaline cyanides,

quebracho, starch; certain detergents of the types including sulphonated alcohols, salts of multibasic inorganic acid esters of long-chain organic acids, and halogenated oils; zinc sulphate, sodium sulphite, and copper sulphate. Certain other substances may be locally abundant and their use, temporarily at least, may be justifiable on that score, but a suitable flotation agent consisting of one or more of the above-mentioned substances should be determined and the best available supply investigated against the time when the supply of the local substance is exhausted.

Testing flotation agents is probably the most common type of testing at an operating plant. The first step is, of course, to find by actual test, first in the laboratory and then in the mill, whether the new agent will produce satisfactory recovery and grade of concentrate with the mill feed. In this investigation it is essential that the conditions of contemplated use be duplicated. This is not always an easy matter. For example, if flotation feed is reground residue from gravity concentration, if reclaimed water is used in the mill, and the new reagent is to replace one or more of the reagents in regular use, it is substantially impossible to obtain a sample for laboratory testing that has the size and mineralogical composition of mill-flotation feed and is uncontaminated with existing reagent. Under such circumstances the best approximation to mill conditions will be attained by taking some of the original ore, concentrating it in the laboratory by gravity treatment patterned on the mill scheme, then grinding the residue in the laboratory to mill size. It is not safe to take a sample in the mill and dry it to drive off mill reagents. Such dried pulp will almost invariably float more poorly than properly prepared fresh pulp.

Assuming favorable flotation results from the laboratory tests, the questions of quantity required, supply, and price should be investigated. Unless the potential supply is large, the price is sure to advance with adoption of the agent by other companies, and deliveries may be difficult. The probable effect of storage at the mill should be looked into; the behavior in the water-recovery system; and the effect on flotation of such part of the reagent as comes back with reclaimed water. Some reagents that have been suggested and/or used have unpleasant or dangerous physiological effects, *e.g.*, amyl acetate, valerianic acid, hydrogen sulphide, sulphur dioxide, and alkaline cyanides. This fact must be given due weight.

When a new reagent is proposed to be used in combination with old reagents, the laboratory investigation should include parallel runs in which every condition is the same except that in one run the proposed new reagent is present and in the other it is absent. A considerable number of reagents have been patented that will not stand this test.

Testing flotation processes involves no different principles, in so far as determining suitability for mill operation is concerned, from those already outlined. If the process is a new one, it is well to bear in mind that the inventor may know little about it himself and that, unfortunately, he does not always put all of that little into his patent. As a result the early trials may be a succession of failures. The history of the agitation-froth process typifies the first contingency. The discovery was made in treating high-grade zinc-bearing tailing in Australia. Great difficulty was encountered 5 years later in applying the process to Butte zinc ores, and its subsequent application to low-grade copper ores was established as the result of literally thousands of trials by mill operators in the face of statements by representatives of the patentees that their process was not suited to the treatment of such ores.

When testing is directed toward establishment of the physical and chemical phenomena underlying a flotation process, actual operation of the process is of little avail. The essential phenomena involved lie in the field of molecular physics and chemistry, and, in the operation of the complete process, are so complex and masked that it is impossible to segregate and observe them. Such testing requires resources both of equipment and personnel different from those available at a plant laboratory. The experiments usually bear but little apparent resemblance to the process. The danger to guard against is that of overlooking, in a simple experiment that involves only one of the elements, the effect of the simultaneous action of the other elements.

Interpretation of test results. Translation of laboratory results into terms of mill-scale operations is, in the usual case, less difficult in flotation than in gravity concentration, and in all cases more certain than where chemical reactions such as occur in leaching and precipitation operations are concerned. Any flotation result that can be obtained in a laboratory machine can be obtained in mill operation, if the essential laboratory conditions are duplicated. The converse of this statement is also true, except that the mill-sized machine is capable of handling a somewhat coarser feed than can be handled in the laboratory machine. Considering the essential elements of pulp treatment in detail, the translation from laboratory results to mill results will be as follows:

Average size of feed may be slightly coarser in the mill than in the laboratory or, if the grinding in the mill is carried to the same extent as in the laboratory, a somewhat better result, other conditions being equal, may be expected in the mill than in the laboratory.

Water may make a considerable difference between laboratory results and mill results and this difference may be either in favor of or to the detriment of the mill. The former will ordinarily be the case if a portion of the mill water is reclaimed and reused. Under these circumstances it will ordinarily be found that the flotation agent brought back by the mill water will decrease, to a considerable extent, the amount of new flotation agent that it is necessary to add, and that froth will be more easily obtained with this reclaimed water mixed in. If, however, there is any considerable amount of soluble salts in the ore, or if the settling ponds are of considerable area and in an arid region, and there is any considerable amount of dissolved solids in the new water or thrown in by the ore, then the salts in the water may have a harmful effect on flotation.

Flotation agents in the mill will be the same as in the laboratory except that it will generally be possible in the mill to reduce, to some extent, the proportion of frothing agent in the mixture.

Peripheral speed of the agitators in agitation-type machines may, in general, be somewhat less in the mill than in the laboratory.

Air consumption per cubic foot of pulp treated in pneumatic machines will usually be less in the mill than in the laboratory. The pressure on the underside of the blanket will necessarily be higher in the mill machine than in the laboratory machines described, on account of the greater head on the pulp side of the blanket.

Time of treatment necessary in the mill will approximate closely the time for making a given recovery and grade of concentrate in the laboratory. Grade of final concentrate obtained in the mill will be close to that obtained in the laboratory. With oxidized metalliferous ores requiring sulphidization, plant results are usually better on account of rapid reversion of the sulphidized surface in the laboratory tests. Recovery will come close to the indicated extraction calculated by formula 133, from laboratory results, if, in the calculation, the figure for grade of concentrate is that obtained from the cleaner operation, the figure for rougher tailing is that obtained from the rougher operation, and the middling or cleaner tailing obtained in the laboratory is disregarded, provided that the grade of this middling product is not more than twice the grade of the original heads, and that the mineralogical character of the middling is not markedly different from that of the original feed.

Accessory Laboratory Equipment

In addition to equipment of the nature described in connection with specific test methods, an ore-testing laboratory should contain miscellaneous equipment of the nature listed below:

Sample driers. A useful form for large samples is shown in Fig. 164, item *A*. It consists of a large 3-walled rectangular pan with a steam chamber for a bottom, all mounted on a suitable framework at a convenient distance from the floor. The steam drying rack (item *B*) and gas drier (item *C*) are suitable for smaller samples. An enclosing cupboard with good ventilation is essential to the best performance of these latter apparatus.

Hand-sampling equipment. Square-edge D-handle shovels. Cross for cone-and-quarter sampling. Jones riffle with about 16 @ 1-in. chutes and another with about 16 @ 0.5-in. chutes. (The riffles should have an even number of chutes.) Galvanized ash cans, coal hods, and pails. A cement sampling floor free from cracks or 2 @ 1/4-in. steel sheets about 6×6-ft. Floor brush. Coffee mill. Disk pulverizer.

Assay laboratory with full equipment of apparatus and reagents for both wet and dry assaying. See a good book on assaying (Art. 10) for a check list. There should be gas-fired pot and muffle furnaces that will serve also as roasting furnaces for testing in magnetic concentration and hydrometallurgical work.

Microscope equipment. Hand lens, 10× to 15×. Microscopes (see Art. 9). Grinding and polishing laps. Mounting equipment. Apparatus and chemicals for microchemical work. See Chamot, Murdock, Davy and Farnham, Johannsen, Art. 10.

Equipment for sizing tests. Set of 8-in. Tyler standard sieve-scale testing screens to $\sqrt[4]{2}$ ratio up to 1.050 in. (see Table 28) and square-mesh wire screens in wooden frames about 18-in. square on approximately $\sqrt{2}$ scale from 1.05-in. to 4-in. Testing-sieve shaker. Sample pans, 2-, 4-, 6-, 8-, and 12-in. diameter (patty tins and pudding tins will serve). Scoops. Counter brushes. Round assay-button brushes. 1-in. flat camel's-hair brushes. Glazed paper. Paper bags and sample envelopes. Eye piece and stage micrometers for the microscopes (see *Microscopic sizing*, Art. 15). Elutriation apparatus (see Arts. 13, 14). Sedimentation equipment (Art. 16).

Grading equipment. Mechanical classifiers of suitable size for the ball and rod mills. Diaphragm cones for feeding concentrating tables. 6×6-ft. Dorr thickener with diaphragm-pump discharge.

Handling equipment. Trucks, conveyors, elevators for dry material, and centrifugal pumps for fine wet material.

Miscellaneous. Good equipment of tools for simple carpentry, plumbing, tin-smithing, and machine work. Racks for storage of material and small samples. Room for barrel or bin storage of larger samples. Room for a junk pile.

General. The most desirable arrangement is a separate building with railroad spur for delivery of heavy machinery and ore samples, and river or storm-sewer connection or the like for disposal of finely ground waste. The spur track should preferably approach the building at a sufficient elevation to permit gravity unloading of bulk-ore samples into a receiving bin, and the unloading platform should be served by a crane that serves the milling room also. The building proper should consist of a large milling room and a number of small rooms for microscopic work, polishing, photographic processing, assaying, flotation testing, screen analysis, shop, small-sample storage, junk pile, etc. The best arrangement for the milling room is a large light room with high roof, preferably having, at one end or side, a strong skeleton framework with three or four floors at 8- to 10-ft.

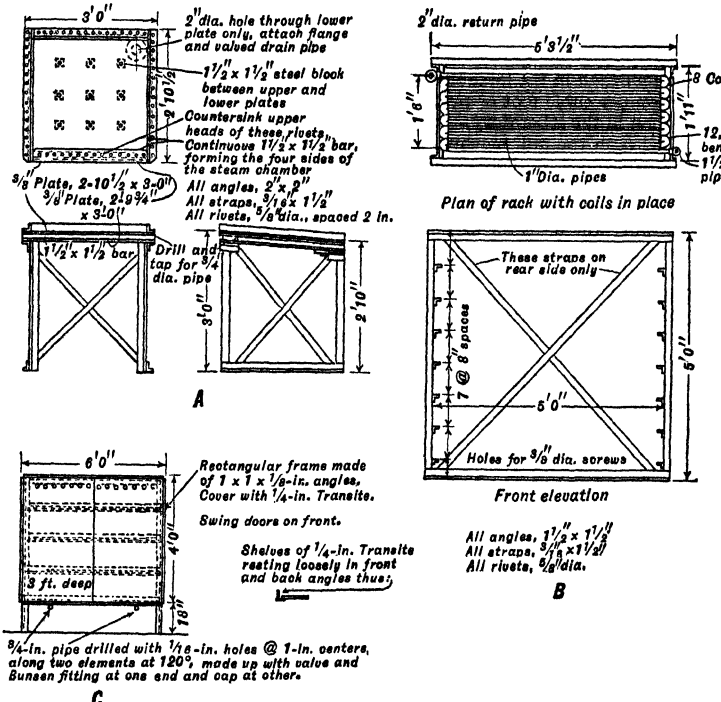

FIG. 164. Laboratory driers.

intervals, stepped back sufficiently to permit ready crane delivery, and a gallery around the rest of the room. The whole room should be crane-served. All but the heaviest apparatus should be set up as a self-contained portable unit, capable of being picked up by the crane and set down in the desired position on the floor or on the skeleton frame for use, and thereafter returned to a place on the gallery for storage. The feed bins should discharge by feeders to a screen, oversize to a jaw crusher, undersize and crusher product to a conveyor and thence to a screen, oversize to a gyratory, undersize and crusher product to a conveyor to a screen, oversize to rolls, undersize and roll product to a bucket elevator to another screen returning oversize to the rolls and undersize to a compartmented fine-ore storage bin. The ideal condition would be to have each of the preceding crushers and screens so placed that it may be picked up and set down in the main milling room for individual test, but if this is not possible the arrangement must be such that each crusher is capable of individual test for capacity, power consumption and size of feed and product. There should be a bucket elevator in the main milling room delivering to the top of the skeleton frame and a battery of centrifugal pumps piped to deliver to any desired level of this frame. The fine-ore storage bins should be arranged for delivery to the elevator boot or to a rod or ball mill and the latter should, of course, be arranged for closed-circuit grinding, if in permanent locations, with finished product going to one of the centrifugal pumps. Set-ups for substantially any concentration or hydrometallurgical process with

gravity flow of pulp can be made on the skeleton framework. This framework should be floored with removable slatted wooden sections about 2 ft. wide by 5 ft. long built up of 2×4-in. yellow pine. A dust-collecting system with suitable inlets at each permanent dry-crushing or screening location and a service line into which temporary inlets may be connected is desirable although not essential. There should be a large sump in the floor of the main room, toward which the floor drains from all directions, with sufficient capacity to hold all excess water from a 1- or 2-hr. concentrating run involving wet screening, hydraulic classification, jigging, and tabling. The sump should discharge to waste by gravity either from bottom outlets or by decantation. A centrifugal pump should be provided to return water from the sump to the water-feed tank. This should be a tank about 6-ft. diameter by 6 ft. deep, located at the highest point of the laboratory, fed by the new-water system and by the sump pump, discharged into the laboratory-supply line by an outlet placed about 6 in. above the bottom, and having an overflow pipe of generous dimensions returning to the sump, a 1-in. telltale line returning with the overflow, and a small drain line from the center of a slightly dished bottom. The water line from this supply tank should be of 3- or 4-in. diameter running around the walls of the laboratory, with permanent branch lines at strategic points and numerous plugged tees and valved outlets, a part of which should be fitted with $^{3}/_{4}$-in. and others with 1 $^{1}/_{2}$-in. male hose bibbs. There should be a half dozen or more portable cylindrical tanks, 6- and 8-ft. diameter by 2 ft. high, of heavy galvanized-iron sheet, fitted with several 1 $^{1}/_{2}$-in. outlets through floor flanges at one place on the rim and one such opening on the wall at the bottom. These are useful for collecting and dewatering sand products, or for holding dewatered slimes, and to keep solid matter out of the sump.

Cleaning up. All apparatus should be capable of complete and ready clean-up. Detail of the necessary arrangement to secure this end will vary with different apparatus, but in general all tanks and hoppers should have sloping bottoms where possible, all machines should be so placed that the material left-in-process can be washed or brushed into receptacles set under them, and all apparatus should be so designed that the amount of material left therein at the end of the run is a minimum.

23. TESTING FOR AMALGAMATION AND CYANIDATION

Amalgamation. Testing for amenability of a gold ore to amalgamation consists in determining the conditions which prevent free clean-gold particles from coming into contact with a clean mercury surface, since such contact invariably results in seizure of the particle by the mercury phase. Testing therefore should be directed toward overcoming the effect of the adverse conditions (Sec. 14, Art. 6).

Mortar-amalgamation test is made by grinding a <35-m. sample in an iron mortar for some definite length of time, after the addition of mercury (about 300 lb. per ton of ore) and the necessary reagents (Sec. 14, Art. 6); pulp densities of 60 to 80% are usual. At the end of the grind, mercury is removed by panning and the tailing is assayed for Au. Tailing should be examined to determine presence of minute mercury globules, due to noncoalescence; additions of caustic soda or ammonium chloride may cause coalescence of such globules with the main mercury body.

Gold pan made of copper, silver-plated copper, or Muntz metal may be surfaced (Sec. 14, Art. 6) with a silver or base amalgam and used to simulate plate amalgamation. A 2- to 5-lb. sample ground fine enough to free precious metals, together with enough water to give a 10 to 25% pulp density, is placed in the pan. The pan is gently shaken for some definite length of time, after which the tailings are recovered and assayed. The charge must not be so large or the size so coarse as to produce scouring of the plate. Reagents such as lime, caustic, acid, etc., may be added as desired. The test may also be made in an unsurfaced pan using a teaspoonful of mercury.

Bottle tests using 40 to 60% pulps, 1% NaOH, and mercury (100 to 150 lb. per ton) are made by placing the charge in a large bottle which is rolled backward and forward for some definite length of time (usually 1/2 to 3 hr.). At the end of the run mercury is recovered by panning.

Tumbling-mill tests simulating barrel amalgamation are made in a small laboratory ball mill (without liners) operated at low speeds. The tumbling media used are small in number and large in size, *e.g.*, 1 piece of shafting or 2 or 3 large balls. Pulp density used depends upon the object of the test; if it is desired to disperse mercury, an 80% pulp density is used; on the other hand a 20 to 40% pulp density is used to keep a mercury pool. Time of test ranges from less than 1 hr. to several hours. Mercury is recovered by panning, and tailing is assayed.

Sizing-sorting-assay tests of the tailing from amalgamation tests (bottle or tumbling-mill tests) yield information concerning liberation and recovery to be expected from finer grinding of sample. *Rose* recommends splitting the sample into size fractions followed by testing of each fraction.

Cyanidation. Amenability is tested by subjecting the ore to limiting conditions prevailing in practice, *e.g.*: Ore, 100 gm. <200-m. Add CaO or NaOH at about 1 : 1 dilution until the pulp remains distinctly alkaline after agitation. Dilute to 25% solids and add cyanide to give 1% KCN solution. Agitate continuously, preferably with free access

of air, for 72 hr. Filter and wash by vacuum. Titrate first filtrate for cyanide. Wash tailing thoroughly with water and assay.

Method of treatment. Determining the probable best method of treatment requires extensive test work. The factors to be investigated are: (*a*) economic grind, (*b*) solution strengths and consumption, (*c*) pulp dilution, (*d*) treatment time, (*e*) necessity for auxiliary treatments and reagents, (*f*) treatment stages. Each of these factors should be varied separately, keeping all other factors constant. In general, most rapid progress will be made by determining first the grind necessary, experimenting at a solution strength indicated by the cyanide consumption in the amenability test. This series of tests can be made to give at least preliminary results on time factor by sampling solutions at, say, 12, 24, 48, and 72 hr. Next, on the basis of these tests, investigate extraction *vs.* solution strength, again making time-factor observations. From this point on the order of tests will vary according to the trend of the preceding results.

Procedure in testing varies according to the nature of the test. Examples follow.

Bottle agitation is employed in most cases. Bottles of 2.5- to 4-li. capacity, with reasonably large mouth to afford some circulation of air, are used for 500-gm. charges; larger or smaller sizes should be used for marked changes in charge weight. They are agitated by placing them on rollers, axis horizontal, at 20 to 30 r.p.m.

Fineness. Grind a batch of ore dry through, say, 20-m. and riffle out a sample (100 to 500 gm.) for test. Grind the balance to 35-m. and cut out a second sample. Repeat at 65-m., 100-m., 150-m., and 200-m. Place the samples with, say, 3 parts of water, in separate bottles; add enough lime to maintain an alkalinity at which ionization of cyanide is reasonably high (see Sec. 12, Art. 10, ***Cyanide***), and cyanide to give a solution strength of 0.5% KCN. Agitate 12 hr., withdraw enough solution for assay and for test of alkalinity and cyanide strength; replace solution withdrawn with new solution of a strength to restore the original cyanide concentration and alkalinity. Agitate for another 12 hr. and repeat solution withdrawal and replacement. Do the same at 48- and 72-hr. agitation. Filter, wash, and assay residue.

Solution strength. Prepare six samples at the size indicated best and make up charges with solution strengths of 0.05, 0.10, 0.25, 0.5, 0.75, and 1% KCN, with an amount of lime, as indicated in the fineness test, to maintain suitable *p*H. Agitate for a period which the fineness tests indicated would give reasonably complete extraction. Test final solutions for cyanide and lime, and assay residues. If any of the tests show substantially complete consumption of cyanide, repeat them with replenishment of cyanide, as indicated by titrations, at intervals of a few hours. This may uncover a procedure that will result in as good an extraction as was obtained with stronger solution, with a lower consumption of cyanide.

Similar experimentation, based on the information afforded in each case by all preceding tests, should be used to run down other factors.

Percolation test should be made whenever results of the fineness test show promise in the coarse sizes. Crush a sample to the suspected size, and deslime thoroughly by repeated decantation or by hydraulic classification. Drain as completely as possible. Mix thoroughly by passing through a coarse screen and sample for moisture and assay. Add lime in an amount predetermined by the ore-acidity tests and place in a percolation tank, comprising a container and a suitable sand-tight filter bottom with means for controlled withdrawal of solution from below the filter. Add solution at the top once or twice daily, in amounts of 0.1 to 0.2 times the weight of ore each time. Start with a weak solution to displace moisture, making several additions and immediate withdrawals until solution strength does not change appreciably in passage. Then put on strong solution and let stand for 24 hr. before withdrawal. Follow with several successively weaker solutions, and end with a water wash not exceeding in weight the original moisture introduced. Measure and test all solutions withdrawn for cyanide, alkalinity, and metal content. Finally empty charge, mix, sample, and assay.

Calculations from a test are typified by the following (*RI 3370*). Test procedure involved the steps:

(1) Grind a 250-gm. portion of <20-m. ore with 2.0 gm. of lime (80% available CaO) plus 125 cc. of water in a porcelain pebble mill to about 98% <100-m. and wash the wet pulp to a tared bottle and weigh. (Pulp wgt., 2,050 gm.)

(2) Remove 800 cc. of clear solution, which contains, by titration, 1.1 lb. CaO per ton.

(3) Add 1.0 gm. of c.p. NaCN (2.0 lb. NaCN per ton of solution).

(4) Agitate for 24 hr. on rolls, remove, and allow to settle.

(5) Remove 660 cc. of clear solution by decantation. Titration shows 1.80 lb. NaCN and 0.90 lb. CaO per ton. Take 16 assay-tons for assay. Add 660 cc. of water to bottle, together with 0.4 gm. lime and 0.7 gm. c.p. NaCN.

(6) After 48 hr. total agitation remove from rolls and allow to settle. Analyze clear solution for CaO and NaCN, and assay (16 A.T.). Analysis shows 1.95 lb. NaCN and 0.90 lb. CaO per ton.

(7) Transfer pulp to a suction filter. Wash residue with water to free from dissolved metals, dry, and prepare for assay.

Assays: 24-hr. solution, 0.106 oz. Au, 2.077 oz. Ag; 48-hr. solution, 0.385 oz. Au, 0.752 oz. Ag; residue, 0.025 oz. Au, 0.72 oz. Ag.

COMPUTATIONS:

	Oz. Au per ton		*Oz. Ag per ton*
24-hr. solution, 660 cc. at	0.106 = 69.96	and	2.077 = 1,370.82
48-hr. solution, 1,000 cc. at	0.0385 = 38.50	and	0.752 = 752.00
Cyanide residue, 250 gr. at	0.025 = 6.25	and	0.72 = 180.00
Calculated head, 250 gr. at	0.459 = 114.71	and	9.21 = 2,302.82

EXTRACTION OF GOLD: 24-hr., $0.106 \times 1{,}000 \times 100/114.71 = 92.4\%$. 48-hr., $(69.96 + 38.50)100/114.71 = 94.5\%$.

EXTRACTION OF SILVER: 24-hr., $2.077 \times 1{,}000 \times 100/2{,}302.82 = 90.2\%$. 48-hr., $(1{,}370.82 + 752.00)100/2{,}302.82 = 92.2\%$.

LIME and CYANIDE CONSUMPTIONS are calculated on a weight-balance basis from the analyses given above. Net consumption of cyanide after regeneration is best estimated on the basis of regeneration performances.

Other tests. A great variety of conditions may occur in different ores, which necessitate an elaborate research into such questions as the necessity or disadvantage of preliminary water-wash, acid-wash, or alkali-wash, oxidizing agents, roasting, concentration, amalgamation, or other process, and the use of additional reagents during cyanide treatment, such as bromocyanide, lead salts, etc. These tests are not, however, in the general class of preliminary tests. Water-washing is advisable for partly oxidized ores containing iron or copper sulphides, and acid-washing is also frequently beneficial under the same conditions, particularly where basic sulphates insoluble in water are present. Alkali washes may be advisable with arsenical and antimonial ores. Oxidizing agents improve extraction from certain ores containing easily oxidizable sulphides and certain kinds of organic matter; preliminary treatment with permanganate, with or without dilute sulphuric acid, is sometimes advantageous when these conditions are present. Roasting is beneficial and sometimes essential with ores containing heavy sulphides, arsenides, sulpharsenides, tellurides, etc., but the cost of operation, in comparison with the possible increased saving of valuable metals, should always be considered. Concentration is often advantageous when values are associated with sulphides or other heavy minerals, provided that the latter do not constitute too large a percentage of the ore. Amalgamation should always be tried in presence of coarse Au and perhaps, also, of native Ag. Bromocyanide has been commercially successful only with telluride and with mispickel ores.

Summary. The tests recited herein are for preliminary purposes only. Before a mill is designed, tests should be made on one or more lots of several tons, in which tests countercurrent slime treatment, agitation, and percolation (if indicated) in tanks of pilot-mill size are tested by an experienced operator.

Bibliography. Head (*134 A 256; RI 3226*); Hamilton, *Manual of Cyanidation*, McGraw-Hill Book Co., 1920; Clennell, *The Cyanide Handbook*, McGraw-Hill Book Co., 1910; also *Chemistry of Cyanide Solutions*, McGraw-Hill Book Co., 1904; Dorr, *Cyanidation and Concentration of Gold and Silver Ores*, McGraw-Hill Book Co., 1936; Jackson (*RI 3370*).

24. MILLING CALCULATIONS

Computations of performance in milling are complicated by the fact that it is a continuous rather than a batch operation, that the quantities of solid materials handled are large and usually mixed with water, hence difficult or impossible to weigh. Fortunately it is possible to determine many facts concerning performance without knowing weights, if the value of various constituents is known in some common unit, *e.g.*, the content of some particular metal or mineral, or of water, or some ingredient soluble therein, or of particles of a particular size or falling within some particular size range, or the like. Metal content may be expressed in per cent. by weight or volume, or in units of weight as ounces per ton, or even in units of value, as in dollars per ton, provided, in the latter case, that the value is in direct proportion to the metal content and not an artificial value dependent both upon metal content and lack of other content, as is frequently the case in valuation of concentrate.

Balances. The laws of conservation of matter and conservation of energy constitute powerful tools for testing industrial processes, since they supply the bases for the equations:

MATERIAL BALANCE: *Input of material = output of material + loss.*

ENERGY BALANCE: *Input of energy = output of energy + loss.*

Material balance may be applied to the entire mass of material undergoing treatment or to any specific ingredient thereof; in either event, it may be applied to the entire process or to any part thereof. For example, in a dry-crushing plant the total weight of rock material delivered from the quarry into the plant over any period of time must equal the sum of the weights of the crushed products, plus dust losses and spills, plus loss due to evaporation of moisture, if any, provided only that the period taken is long enough to average out any holdups of material in machines, storage bins, and the like. Similarly,

in a copper concentrator the weight of ore delivered to the mill plus the weight of water added at different points in the flow must equal the weight of solids plus solution discharged as concentrate and tailing. If we are interested only in the copper-material balance, the basic equation becomes:

Input of copper in mill feed = output of copper in concentrate + copper in solid tailing + copper in tailing water + copper in dust losses + copper in spills.

If dust and spills go back into one of the regular streams they are omitted from the balance.

Any other ingredient of the treatment stream, *e.g.*, iron, silica, lead, gold, water, etc., may be independently balanced. Similar balances are applicable to smelters, refineries, manufacturing plants, and the like, irrespective of the process in use, be it chemical or physical. In continuous operations the proviso must always be made that the amount of material taken for balance be so large that the percentage amount of material possibly held up shall be less than the permissible percentage error in the balance. Thus, if a 2,000-ton bin, sometimes empty and sometimes full, is located somewhere in the flow that is to be balanced, the amount of material taken for balance should be at least 100,000 tons for a 2% error. On the other hand, if the bin were filled to the same level at the end of the balance as at the beginning, it need not be considered at all, save for minor fluctuations.

Stoichiometric balance is a form of material balance. In the form most frequently used, it is the familiar stoichiometric equation of chemistry, *e.g.*, $CaCO_3 \rightleftharpoons CaO + CO_2$. Applied with qualitative strictness to a flotation cell, it is a strong deterrent to the miracle type of rumination that passed for thought in the early days of the process. No one has yet had the analytical skill to make a complete quantitative application, but each partial application has moved ahead knowledge of the art and skill in its control.

Energy balance is used industrially principally in the form of a heat balance. This has extensive applications in investigations of operations in power plants, smelters, oil refineries, and the like.

Definitions and notation given below obtain throughout all of the calculations.

C = weight of concentrate, expressed in any units, but necessarily in the same units as the feed F. CONCENTRATE may be defined, for the purpose of the calculations, as the product of the treatment of a given feed which has a higher content of a given ingredient than the feed.

C_1, C_2, C_3 $\cdots$ = weights of various concentrates. When a feed contains more than one valuable ingredient, and a concentrate of each ingredient is made, the subscripts refer to such concentrates.

c = assay of concentrate. See notes to f.

c_{1a}, c_{1b}, c_{2a}, c_{2b}, $\cdots$ = assays of the various concentrates relative to the different ingredients. Thus the lead assay of the lead concentrate C_1 would be denoted by c_{1a}, and the zinc assay of the same concentrate by c_{1b}; the lead assay of the zinc concentrate C_2 by c_{2a}, and the zinc assay of the zinc concentrate by c_{2b}. The alphabetical subscripts thus refer to the same ingredient assayed for, throughout a given set of calculations.

F = weight of feed, expressed in any units. FEED is defined as the material entering treatment in any machine or operation, *e.g.*, ore entering a treatment plant, or the material entering a particular machine.

f = assay of feed. As stated in the introductory paragraph, this assay may be given in any units, *e.g.*, % Pb, oz. Au per ton, lb. Cu per ton; dollars per ton, when the value is directly proportional to the weight of a given constituent, say gold or silver, but not when the value is the combined value of the gold and silver, unless the ratio of weight of gold to silver is the same in all products as in the feed; % <1-mm. material, % moisture, % ash (in coal), etc.

f_a, f_b, f_c, $\cdots$ = assay of feed with respect to the ingredients a, b, c, $\cdots$ See note to c_{1a}, c_{1b}, $\cdots$

K = RATIO OF CONCENTRATION. This term is defined as the ratio of the weight of the feed in a given operation to the weight of concentrate obtained from it; or, stated another way, as the number of tons of feed required to produce one ton of concentrate.

K_a, K_b, K_c, $\cdots$ = ratio of concentration with respect to a, b, c, $\cdots$ See note to c_{1a}, c_{1b}, $\cdots$

M = weight of middling, expressed in any unit, but necessarily in the same unit as F. MIDDLING is defined, for the purpose of these calculations, as the product of the treatment of a given feed, with a content of a given ingredient which lies between the content of the tailing and that of the concentrate.

m = assay of middling.

m_a, m_b, m_c, $\cdots$ = assay of middling with respect to ingredients a, b, c, $\cdots$

R = recovery. The terms EXTRACTION, INDICATED EXTRACTION, ESTIMATED EXTRACTION, and ACTUAL EXTRACTION are sometimes used to indicate recovery. The terminology is so confused that the meaning of none of the terms can be safely assumed without indication of the method of determination. Some writers have attempted to distinguish between extraction and recovery, making the former term mean the value of R as calculated from assays of feed and products (see Eqs. 133, 147, 157, and 158) while recovery indicates the ratio of the weight of metal in concentrate actually recovered (= actual weight of concentrate × assay of concentrate) to the actual weight of metal in the feed (= actual weight of feed × assay of feed). Other writers use the term indicated extraction or estimated extraction to signify R from assay alone, and actual extraction to signify the percentage of the total metal fed that is actually recovered in concentrate. In this book the word recovery is used generally to describe the result by either method of calculation and the term ACTUAL RECOVERY to distinguish, when necessary, the case in which calculation is based on actual weights. The words RECOVERY and YIELD are used synonymously. When the feed contains more than one valuable ingredient, it is usual to calculate and express recovery separately for each such ingredient.

$R_a, R_b, R_c, \cdots$ = recoveries of $a, b, c, \cdots$

T = weight of tailing, expressed in any unit, but necessarily in the same unit as F. TAILING is defined, for the purpose of these calculations, as that product of the treatment of a given feed which is distinctly impoverished in content of a given ingredient as compared with the feed.

t = assay of tailing.

$t_a, t_b, t_c, \cdots$ = tailing assay with respect to ingredient $a, b, c, \cdots$

Two-Product Formulas

The simplest case is that in which two products only, *viz.*, concentrate and tailing, are made from the treatment of a given feed. Under such circumstances:

$$\text{Weight balance: } F = C + T \tag{124}$$

$$\text{Ingredient balance: } Ff = Cc + Tt \tag{125}$$

Multiply Eq. 124 by t, eliminate T, and

$$C = F(f - t)/(c - t) \tag{126}$$

$$F = C(c - t)/(f - t) \tag{127}$$

By similar manipulation,

$$T = F(c - f)/(c - t) \tag{128}$$

$$F = T(c - t)/(c - f) \tag{129}$$

$$T = C(c - f)/(f - t) \tag{130}$$

$$C = T(f - t)/(c - f) \tag{131}$$

By definition, $K = F/C$, whence from Eq. 126,

$$K = (c - t)/(f - t) \tag{132}$$

By definition, $R = 100Cc/Ff$, whence from Eq. 126,

$$R = 100c(f - t)/f(c - t) \tag{133}$$

If four of the six quantities, including two of the assays, are known, it is always possible to solve for the unknown two by means of Eqs. 124 and 125.

Three Products, One Metal

When three products are made and assays are reported in terms of one ingredient only, if no weights are known, determinations of recovery and ratio of concentration are strictly indeterminate problems. If enough is known with respect to the performance of the ore to justify an assumption as to the effect of middling retreatment on the assays of final concentrate and tailing, correction of concentrate and tailing assays may be made on the basis of the assumption, and the preceding formulas may then be applied. For an example, see Art. 21 (*Sizing-sorting-assay test*). If the assumption be made that retreatment of middling will result in distribution thereof into concentrate and tailing of the same assays as the corresponding products made in the operation that produced the middling, then if X and Y represent the final weights of concentrate and tailing respectively from the original and retreatment operations

$$C + M + T = X + Y \tag{134}$$

and

$$Cc + Mm + Tt = Xc + Yt \tag{135}$$

Eliminating Y

$$X = [C(c - t) + M(m - t)]/(c - t) \tag{136}$$

and

$$Y = \frac{M(c - m)}{(c - t)} + T = 1 - \frac{C(c - t) + M(m - t)}{c - t} \tag{137}$$

Eqs. 126 and 128 will, however, give the same result.

If two of the weights F, C, M, T are known in addition to the assays, the other weights and the recovery and ratio of concentration may be calculated by manipulation of the two following equations:

$$\text{Weight balance: } F = C + M + T \tag{138}$$

$$\text{Ingredient balance: } Ff = Cc + Mm + Tt \tag{139}$$

Whence

$$C = \frac{F(f - t) - M(m - t)}{(c - t)} = \frac{T(m - t) - F(m - f)}{(c - m)} = \frac{T(f - t) - M(m - f)}{(c - f)} \tag{140}$$

$$M = \frac{F(f - t) - C(c - t)}{(m - t)} = \frac{F(c - f) - T(c - t)}{(c - m)} = \frac{T(f - t) - C(c - f)}{(m - f)} \tag{141}$$

$$F = \frac{C(c-t)+M(m-t)}{(f-t)} = \frac{T(m-t)-C(c-m)}{(m-f)} = \frac{M(c-m)+T(c-t)}{(c-f)} \quad (142)$$

$$T = \frac{C(c-m)+F(m-f)}{(m-t)} = \frac{F(c-f)-M(c-m)}{(c-t)} = \frac{C(c-f)+M(m-f)}{(f-t)} \quad (143)$$

$$c = \frac{f-Mm-Tt}{1-M-T} \quad (144)$$

$$m = \frac{f-Cc-Tt}{1-C-T} \quad (145)$$

$$t = \frac{f-Cc-Mm}{1-C-M} \quad (146)$$

$$R = 100\left[\frac{c(f-t)}{f(c-t)} - \frac{Mc(m-t)}{Ff(c-t)}\right] = 100\left[\frac{c(m-f)}{f(c-m)} - \frac{Tc(m-t)}{Ff(c-m)}\right]$$
$$= 100\left(1-\frac{Tt}{f}\right) = 100\left[\frac{Cc(f-t)+Mm(f-t)}{Cf(c-t)+Mf(m-t)}\right] \quad (147)$$

$$K = \frac{F(c-t)}{F(f-t)-M(m-t)} = \frac{F(c-m)}{T(m-t)-F(m-f)} = \frac{C(c-t)+M(m-t)}{C(f-t)+M(f-t)} \quad (148)$$

Other equations for K and R may be written by manipulation of Eqs. 138 to 143, but the simpler procedure is to solve for weights of feed and concentrate, after which solutions of K and R are obtainable from the definition equations.

Three-Product Formulas

For 3-product formulas involving one ingredient only, see p. 191. When a feed containing, say, metal a and metal b is so treated as to make three products, *e.g.*, concentrate rich in metal a, another concentrate (or middling) rich in metal b, and a tailing impoverished in both a and b, equations may be written that express the recoveries and ratios of concentration in terms of assays alone, and the weights of the different products in terms of assays and the weight of the feed. Thus

Weight balance: $F = C_1 + C_2 + T$ (149)

Ingredient a balance: $Ff_a = C_1c_{1a} + C_2c_{2a} + Tt_a$ (150)

Ingredient b balance: $Ff_b = C_1c_{1b} + C_2c_{2b} + Tt_b$ (151)

Then from the solution of these simultaneous equations (most readily made by the method of determinants)

$$C_1 = F\left[\frac{(f_a-c_{2a})(c_{2b}-t_b)-(f_b-c_{2b})(c_{2a}-t_a)}{(c_{1a}-c_{2a})(c_{2b}-t_b)-(c_{1b}-c_{2b})(c_{2a}-t_a)}\right] \quad (152)$$

$$C_2 = F\left[\frac{(c_{1a}-f_a)(f_b-t_b)-(c_{1b}-f_b)(f_a-t_a)}{(c_{1a}-c_{2a})(c_{2b}-t_b)-(c_{1b}-c_{2b})(c_{2a}-t_a)}\right] \quad (153)$$

$$T = F\left[\frac{(c_{1a}-c_{2a})(c_{2b}-f_b)-(c_{1b}-c_{2b})(c_{2a}-f_a)}{(c_{1a}-c_{2a})(c_{2b}-t_b)-(c_{1b}-c_{2b})(c_{2a}-t_a)}\right] \quad (154)$$

Ratio of concentration with respect to metal a is, by definition $K_a = F/C_1$. Substituting in this equation the value of C_1 from Eq. 152

$$K_a = \frac{(c_{1a}-c_{2a})(c_{2b}-t_b)-(c_{1b}-c_{2b})(c_{2a}-t_a)}{(f_a-c_{2a})(c_{2b}-t_b)-(f_b-c_{2b})(c_{2a}-t_a)} \quad (155)$$

Similarly, $K_b = F/C_2$, and from Eq. 153

$$K_b = \frac{(c_{1a}-c_{2a})(c_{2b}-t_b)-(c_{1b}-c_{2b})(c_{2a}-t_a)}{(c_{1a}-f_a)(f_b-t_b)-(c_{1b}-f_b)(f_a-t_a)} \quad (156)$$

Recovery of metal a in C_1 is given by the equation $R_a = 100(C_1c_{1a}/Ff_a)$. Substituting in this equation the value of C_1 from Eq. 152

$$R_a = \frac{100c_{1a}[(f_a-c_{2a})(c_{2b}-t_b)-(f_b-c_{2b})(c_{2a}-t_a)]}{f_a[(c_{1a}-c_{2a})(c_{2b}-t_b)-(c_{1b}-c_{2b})(c_{2a}-t_a)]} \quad (157)$$

Similarly, $R_b = 100C_2c_{2b}/Ff_b$ and from Eq. 153

$$R_b = \frac{100c_{2b}[(c_{1a}-f_a)(f_b-t_b)-(c_{1b}-f_b)(f_a-t_a)]}{f_b[(c_{1a}-c_{2a})(c_{2b}-t_b)-(c_{1b}-c_{2b})(c_{2a}-t_a)]} \quad (158)$$

Instead of working from the formulas, the weights of the products may be solved for by writing Eqs. 149, 150, and 151 with the assay values written in and solved directly by determinants.

Example. A lead-zinc ore, containing 7.7% Pb and 11.9% Zn, is treated to produce a lead concentrate assaying 50% Pb and 5% Zn; a zinc concentrate assaying 10% Pb and 50% Zn, and a tailing containing 1 % Pb and 2% Zn.

Weight balance: $F = C_1 + C_2 + T$ (C_1 = Pb conc.; C_2 = Zn conc.)
Lead balance: $7.7F = 50C_1 + 10C_2 + T$
Zinc balance: $11.9F = 5C_1 + 50C_2 + 2T$

Write and solve the determinant for C_1 (see Sec. 21, Art. 4):

$$C_1 = \frac{\begin{vmatrix} 1 & 1 & 1 \\ 7.7 & 10 & 1 \\ 11.9 & 50 & 2 \end{vmatrix}}{\begin{vmatrix} 1 & 1 & 1 \\ 50 & 10 & 1 \\ 5 & 50 & 2 \end{vmatrix}} = \frac{\begin{vmatrix} 2.3 & -9 \\ 38.1 & -48 \end{vmatrix}}{\begin{vmatrix} -40 & -9 \\ 45 & -48 \end{vmatrix}} = \frac{232.5}{2{,}325} = 0.10$$

Similarly write and solve the determinant for C_2:

$$C_2 = \frac{\begin{vmatrix} 1 & 1 & 1 \\ 7.7 & 50 & 1 \\ 11.9 & 5 & 2 \end{vmatrix}}{\begin{vmatrix} 1 & 1 & 1 \\ 10 & 50 & 1 \\ 50 & 5 & 2 \end{vmatrix}} = \frac{\begin{vmatrix} 42.3 & -49 \\ -6.9 & -3 \end{vmatrix}}{\begin{vmatrix} 40 & -49 \\ -45 & -3 \end{vmatrix}} = \frac{-465}{-2{,}325} = 0.20$$

Since $F = 1$, $T = 1 - (0.1 + 0.2) = 0.7$

Recovery of lead in lead concentrate, $R_a = \dfrac{0.1 \times 50}{1 \times 7.7} = 64.9\%$

Recovery of zinc in zinc concentrate $= \dfrac{0.2 \times 50}{1 \times 11.9} = 84.1\%$

Ratio of concentration: lead $= F/C_1 = 1/0.1 = 10 : 1$; zinc $= F/C_2 = 1/0.2 = 5 : 1$.

n-Product Formulas

When any number of products, n, are made, formulas giving the weights of each in terms of the weight of feed, the recovery, and the ratio of concentration may be written by the method illustrated in the preceding article, and these formulas may be solved provided accurate assays of the feed and all of the products are given in $n - 1$ independent ways. The formulas, however, become so long and involved that it is usually simpler to write the simultaneous equations with the numerical values inserted and solve for the percentage weights by determinants, as illustrated in the preceding paragraph. Thus for four products C_1, C_2, C_3, T the corresponding assays of which, in three metals a, b, c are c_{1a}, c_{1b}, c_{1c}; c_{2a}, c_{2b}, c_{2c}; c_{3a}, c_{3b}, c_{3c}; t_a, t_b, t_c; made from a feed F with assay f_a, f_b, f_c the formula for C_1 is

$$C_1 = F\left[\frac{\begin{array}{l}(c_{2c} - t_c)(c_{3a} - f_a)(t_b - c_{3b}) - (t_a - c_{3a})(c_{2c} - t_c)(c_{3b} - f_b) \\ \quad + (c_{3b} - f_b)(t_c - c_{3c})(c_{2a} - t_a) - (c_{3a} - f_a)(t_c - c_{3c})(c_{2b} - t_b) \\ \quad + (t_a - c_{3a})(c_{2b} - t_b)(c_{3c} - f_c) - (t_b - c_{3b})(c_{2a} - t_a)(c_{3c} - f_c)\end{array}}{\begin{array}{l}(c_{2c} - t_c)(c_{3a} - c_{1a})(t_b - c_{3b}) - (t_a - c_{3a})(c_{2c} - t_c)(c_{3b} - c_{1b}) \\ \quad + (c_{3b} - c_{1b})(t_c - c_{3c})(c_{2a} - t_a) - (c_{3a} - c_{1a})(t_c - c_{3c})(c_{2b} - t_b) \\ \quad + (t_a - c_{3a})(c_{2b} - t_b)(c_{3c} - c_{1c}) - (t_b - c_{3b})(c_{2a} - t_a)(c_{3c} - c_{1c})\end{array}}\right] \qquad (159)$$

The equations for C_2, C_3, and T may be written from Eq. 159 by symmetry, *e.g.*, to get C_2, substitute in the numerator of Eq. 159 f_a for c_{2a}, f_b for c_{2b}, f_c for c_{2c}, c_{1a} for f_a, c_{1b} for f_b, and c_{1c} for f_c; to get C_3 substitute in the numerator of Eq. 159 c_{1a} for f_a, c_{1b} for f_b, c_{1c} for f_c, f_a for c_{3a}, f_b for c_{3b}, and f_c for c_{3c}; to get T substitute in the numerator of Eq. 159 f_a for t_a, f_b for t_b; f_c for t_c, c_{1a} for f_a, c_{1b} for f_b and c_{1c} for f_c.

Example of the use of determinants for a 4-product problem follows: Given assays as in Table 71, write the equations in the following form:

Table 71. Specimen assays for 4-product determinant solution

	Pb, %	Zn, %	Cu, %
Feed.....	7.1	5.7	2.26
Lead conc....	60	1	1
Zinc conc.....	1	40	1
Copper conc...	2	2	10
Tailing.....	1	2	0.1

	Feed	Lead conc.	Zinc conc.	Copper conc.	Tailing
Weight balance:	F =	C_1 +	C_2 +	C_3 +	T
Lead balance:	$7.1F$ =	$60C_1$ +	C_2 +	$2C_3$ +	T
Zinc balance:	$5.7F$ =	C_1 +	$40C_2$ +	$2C_3$ +	$2T$
Copper balance:	$2.26F$ =	C_1 +	C_2 +	$10C_3$ +	$0.1T$

Then

$$C_1 = \frac{\begin{vmatrix} 1 & 1 & 1 & 1 \\ 7.1 & 1 & 2 & 1 \\ 5.7 & 40 & 2 & 2 \\ 2.26 & 1 & 10 & 0.1 \end{vmatrix}}{\begin{vmatrix} 1 & 1 & 1 & 1 \\ 60 & 1 & 2 & 1 \\ 1 & 40 & 2 & 2 \\ 1 & 1 & 10 & 0.1 \end{vmatrix}} = \frac{\begin{vmatrix} -6.1 & 1 & -1 \\ 34.3 & -38 & 0 \\ -1.26 & 9 & -9.9 \end{vmatrix}}{\begin{vmatrix} -59 & 1 & -1 \\ 39 & -38 & 0 \\ 0 & 9 & -9.9 \end{vmatrix}} = \frac{\begin{vmatrix} 197.5 & -38 \\ -53.64 & -0.9 \end{vmatrix}}{\begin{vmatrix} 2203 & -38 \\ -531 & -0.9 \end{vmatrix}} = \frac{2216.07}{22160.7} = 0.10$$

Similarly $C_2 = 0.10$, $C_3 = 0.20$, and $T = 0.60$. From these values the recovery of each metal in its respective concentrate and the respective ratios of concentration may be written.

Limitations of multiproduct formulas. The formulas above given are theoretically correct, but the accuracy of the answers that they give is, of course, wholly dependent upon the accuracy of the sampling and assaying. The formulas for two-product treatment are not particularly sensitive to small errors in data or calculation, hence recovery and weight of concentrate should check smelter returns (or their equivalent). If they do not check, mill operation should be examined for spills, losses, hold-backs as in tanks, etc., and shipping and smelter sampling should be carefully scrutinized.

The formulas for three or more products are more sensitive to small errors both in data and calculation, especially when one of the products is of relatively small weight and low assay.

Fry (*114 J 493*) cites an example of the effect of such errors. His actual assays and assumed erroneous assays together with weights of products calculated from both by determinants, using the four possible equations three at a time, are shown in Table 72. The calculated weight of feed in the columns whose

Table 72. Possible effect of small errors in assaying and sampling on calculated weights in 3-product concentration (*Assays from Fry, 114 J 493*)

	Pb, %	Zn, %	Ag, oz. per ton	Calculated weights, %			
				Data used *a*			
				WLZ	WLS	WZS	LZS
Actual assays:							
Feed	11.34	31.85	13.2	100.69	100.4	100.0	102.84
Lead concentrate	21.4	9.1	25.1	39.93	40.4	40.0	39.74
Zinc concentrate	5.4	56.2	6.2	50.9	50.0	50.0	49.68
Tailing	0.8	1.1	0.6	9.86	10.0	10.0	13.42
Possible erroneous assays:							
Feed	11.3	31.8	13.3	99.93	100.07	.....	.....
Lead concentrate	21.3	9.0	25.0	39.93	12.17	.....	.....
Zinc concentrate	5.4	56.0	6.3	50.2	172.2	.....	.....
Tailing	0.7	1.0	0.7	9.8	−84.3	.....	.....

a W weight equation. L Lead equation. Z Zinc equation. S Silver equation.

heading contains the letter *W* (which indicates that one of the simultaneous equations was $F = L + Z + T$) should, of course, be 100.0. The difference is due to slide-rule discrepancies, which, in some cases, may become very important. The difference between the calculated weight and 100 in the last column measures the effect of both assays and slide rule. It will be noted that the errors that Fry assumed made but little difference in calculated weights in the case where the silver assay was not used, but that impossible results were obtained when the erroneous silver assays were included in the calculation.

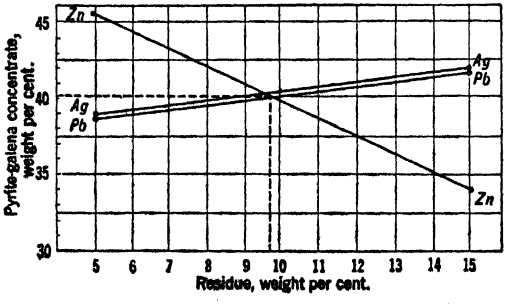

FIG. 165. Graphical solution of three-product problem.

Graphical solution. Fig. 165 shows a method, proposed by Fry, for a graphical solution designed to point out inaccuracies in sampling and assaying and at the same time average them, if they are not too large to be averaged. The chart is constructed as follows: Assume two values for the weight of tailing T, one less than the probable, the other more. Using these assumed values, e.g., in the case of the erroneous assays given, 5 and 15%, write equations in L (weight of lead concentrate) as follows:

Using the zinc assays

$$31.8\ (100) = 9L + 56\ (95 - L) + (5)\ (1), \text{ from which } L = 45.6$$
$$31.8\ (100) = 9L + 56\ (85 - L) + (15)\ (1), \text{ from which } L = 33.9$$

Using the lead assays

$$11.3\ (100) = 21.3L + 5.4\ (95 - L) + 5\ (0.7) \text{ from which } L = 38.6$$
$$11.3\ (100) = 21.3L + 5.4\ (85 - L) + 15\ (0.7) \text{ from which } L = 41.6$$

Using the silver assays

$$13.3\ (100) = 25L + 6.3\ (95 - L) + 5\ (0.7) \text{ from which } L = 38.9$$
$$13.3\ (100) = 25L + 6.3\ (85 - L) + 15\ (0.7) \text{ from which } L = 41.9.$$

Plot the assumed values of T as abscissae and the derived weights of L as ordinates and connect the corresponding values with straight lines. Read the mean of the two intersections as mean values of L and T. In this case L was read off as 40.1 and T as 9.65, which gave Z (weight of zinc concentrate) 50.25 by difference.

Applications of Formulas

The most usual applications of the formulas are to control the operations of individual machines and of the whole mill and to check smelter returns. If feed is weighed in automatically and accurate moisture determinations are made, the calculated weight of concentrate over a period such as a month should check dry weight of concentrate shipped within reasonably close limits, and over a period of a year should check very closely. Discrepancy in one direction only should be closely investigated; differences should be both positive and negative over a period of time.

In mills where the feed is not weighed, tailing should be time-sampled. Weights of concentrate and tailing may then be calculated and the former weight checked against the shipping weight.

As indicated in the introductory paragraph, the two-product formulas may be applied to investigations of the performance of screens and two-product classifiers. (See also Sec. 7, Art. 2.) In these cases the assays are usually screen analyses. The size split for statement of assays should be a screen that gives 5%, or more if possible, as the minimum assay used. Ordinarily cumulative percentages on or through the key screen are chosen as the assays rather than individual percentages. For another formula for investigating classifier performance, see Eq. 164.

In laboratory testing three products are usually made, *viz.*, concentrate, middling and tailing. As discussed at p. 191, some assumption must be made with respect to middling distribution, if the two-product formulas are to apply. In flotation testing it is ordinarily justifiable to assume that retreatment of middling would not affect primary concentrate or tailing assays, but the same assumption cannot ordinarily be made in gravity concentration.

Efficiency of concentration. It is apparent from inspection of the two-product formulas for recovery and ratio of concentration that if all of the feed was merely shoveled to one side and called concentrate, the recovery would be 100%. The ratio of concentration would be 1, which would, of course, tell what had been done. This shows that recovery and ratio of concentration, or, at least, assay of concentrate, must be stated together in order that the figures may give a measure of the efficiency of the concentrating operation. Several proposals have been made to combine the numerical values of recovery and ratio of concentration, or ratio of assay of concentrate to assay of feed or tailing into one number called an efficiency index. No proposal, however, shows a logical method of combination or one that has a physical significance that can be visualized. Hence it is better to give the two numbers, as is usual.

Evaluation of flotation tests either by definition of an index of efficiency or by correlation of recovery and ratio of concentration or product composition has been the subject of a considerable amount of work.

Selectivity index. Gaudin (*87 A 483*) defined a selectivity index as the geometric mean of the relative floatability and the relative rejectability. Relative floatability is relative recoverability. For a binary ore $R_a = Cc_a/Ff_a$, and $R_b = Cc_b/Ff_b$ but $c_b = 100 - c_a$, and $f_b = 100 - f_a$. Whence

$$\frac{R_a}{R_b} = \frac{c_a(100 - f_a)}{f_a(100 - c_a)} = \frac{f_b(100 - c_b)}{c_b(100 - f_b)} \tag{160}$$

Relative rejectability is relative recoverability in the tailing, *i.e.*, $R(T)_a = Tt_a/Ff_a$, and $R(T)_b = Tt_b/Ff_b$; $t_b = 100 - t_a$. Whence

$$\frac{R(T)_b}{R(T)_a} = \frac{t_b(100 - f_b)}{f_b(100 - t_b)} = \frac{f_a(100 - t_a)}{t_a(100 - f_a)} \tag{161}$$

The selectivity index S is

$$S = \left[\frac{R_a}{R_b} \times \frac{R(T)_b}{R(T)_a}\right]^{1/4}$$

$$S = \sqrt{c_a t_b / c_b t_a} \qquad (162)$$

As was noted previously, there is no *a priori* logical foundation for this index, hence interpretation depends upon comparison with accumulated data of performance.

Graphical evaluation. Gillies *et al.* (*A TP 1409*) devised a graphical method for evaluation of flotation tests. Its use involves a minor change in testing procedure; a series of concentrates are removed instead of a single concentrate. These concentrates are assayed and cumulative recoveries calculated. Per cent. cumulative rejections of gangue are also calculated. The sum of the per cent. recovery and the per cent. rejection of gangue minerals is calculated for each fraction; the result is called the SUMMATION INDEX. Fig. 166 shows a plot of these indices. The summation-index curve shows a maximum at about the point where the recovery of the values is almost complete. This maximum is claimed to indicate "best" results. But best results differ according to the criterion. If, as is usually the case, this is net return per ton of feed, the method does not apply, since return per unit of concentrate varies with the grade.

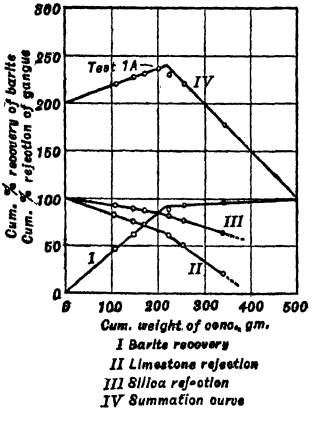

FIG. 166. Graph of summation index (*after Gillies, et al.*).

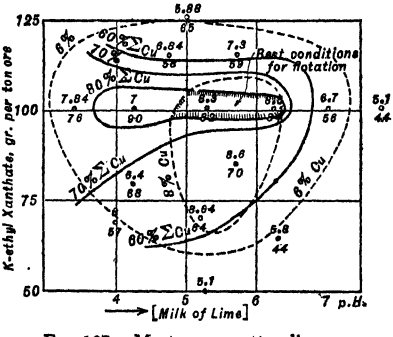

FIG. 167. Mortenson scatter diagram.

Fraas (*RI 3663*) plots cumulative concentrate composition against cumulative recovery in probability-probability coordinates. Mortenson (*12 MMt 496*) plots a scatter diagram (Fig. 167) which correlates tests with a pyrite-copper dump ore to determine the proper *p*H and amount of collector to yield best results. Recovery and reciprocal of concentration ratio for each test are written in. Iso-recovery and iso-concentration curves are determined by connecting points having equal recoveries and concentrations. Thus it is possible to locate areas (decreasing in size) wherein optimum flotation results are obtained.

Commercial recovery (*IC 6559*) is defined as the ratio of the value of the concentrate actually produced to the value of perfect concentrate (resulting from a hypothetical process giving perfect recovery and perfect separation). Assays of the perfect concentrate are assumed after proper consideration of the mineralogical composition of the ore. At the BLACK HAWK concentrator perfect zinc concentrates are assumed to contain 56% zinc. Perfect lead concentrates vary with the copper content of the ore; when the plant is working on a so-called combination ore, perfect lead concentrate is assumed

Table 73. Metallurgical results at Black Hawk

Item	Weight, tons	Analyses				Recoveries, %				Value, $ per ton	Total value of production, $
		Ag, oz. per ton	Pb, %	Cu, %	Zn, %	Ag	Pb	Cu	Zn		
Feed....	125.8	5.84	6.5	2.51	14.2	.....	.....	.....	.....	.....	.....
Pb conc.	20.7 *a*	31.84	36.7	13.65	14.0	89.74	92.94	89.51	16.23	65.16	1,348.81
Zn conc.	24.47 *a*	2.36	1.7	1.18	52.9	7.86	5.09	9.14	72.49	14.02	343.07
Tailing..	80.63	0.48	0.2	0.05	2.5	5.27	1.97	1.35	11.28	.....	.....
Total....	.....	.....	.....	.....	.....	102.87	100.00	100.00	100.00	.....	1,691.88

a Calculated.

to assay 50% Pb. The ratio of concentration, $K_{perf.}$, for perfect Pb concentrate and perfect recovery equals the ratio of Pb in perfect concentrate to Pb in ore. The assays for Ag and Cu in the perfect Pb concentrate are the products of $K_{perf.}$ and the respective assays for these metals in the ore. Evaluation of these products is obtained by applying the current metal quotations to the smelter contract in force, making deductions for freight and treatment charges. Table 73 gives metallurgical results, and Table 74, commercial recovery for a monthly period at BLACK HAWK.

Table 74. Commercial recoveries corresponding to Table 73

Product	Max. possible weight, tons	Analyses				Value per ton, $	Total value, $	Commercial recovery, %
		Ag, oz. per ton	Pb, %	Cu, %	Zn, %			
Perfect Pb conc...	20.90	35.16	40.0	15.11	.....	74.59 *a*	1,558.93	.....
Perfect Zn conc...	31.93	.....	.....	.....	56.0	16.49 *a*	526.52	.....
Total.....	.....	.....	.....	.....	.....	.....	2,085.45	81.1% *b*

a Based on the following prices: Ag, 43.375¢ per oz.; Pb, 6.1¢ per lb.; Cu, 17.75¢ per lb.; Zn, 5.10¢ per lb.

b Recovery: 1,691.88/2,085.45.

At BUNKER HILL & SULLIVAN (*IC 6314*) concentrator efficiency is estimated by the ratio of the net smelter value of the products to the gross market value of mill feed, using the same price quotations in both cases. This ratio is called the economic extraction. Fig. 168 gives the relationship existing between economic extraction and recovery and grade, in a hypothetical case. Economic recoveries based on total Ag, Pb, and Zn range from 40 to 80%. A similar measure of efficiency was used at the Pecos concentrator of the AMERICAN METAL CO. (*IC 6605*). The economic extraction at Pecos for 1930 (based on 1927 metal prices, freight, and treatment costs) was 52.9% for the lead circuit, 37.1% for the zinc circuit, and 43.3% based on the total circuit.

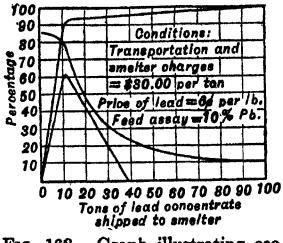

FIG. 168. Graph illustrating economic extraction.

Evaluation of concentration performance. In judging different performances in a given mill or comparing performances in different mills superiority is not established by simple comparison of recoveries and/or grades of concentrate or by any of the attempted one-number combinations of these measures (*vide:* ***Selectivity index; Summation index***), but rather by the monetary returns, which constitute the practical integrated measure of the utility of the operation. For ores that yield one product only, the net return per ton of feed is the net value of a ton of product, *e.g.*, metalliferous concentrate, divided by the ratio of concentration. This net value is, of course, gross return per ton of concentrate less smelter charge, freight, and milling cost. When two or more products are made, comprising an equal or greater number of value-producing constituents (*e.g.*, a lead-copper concentrate containing gold and silver and a zinc concentrate containing appreciable amounts of gold), although the principle of analysis is the same, the application is much more complicated.

Freeman (*81 Aa 9*) describes a method of analysis for such a case for use in a given mill, which comprises setting up, once for all, a series of tables showing the effects on net returns of the various performance variables throughout their normal range of variability, whereupon any given performance record can be compared readily either with a standard performance or with any other specific performance in such a way as to show which particular element or elements of difference preponderate in the over-all difference calculated.

Example. Freeman gave as an example a lead-zinc-silver ore for which the data in Table 75 constituted standard conditions. By application of the metal prices, and the smelter and freight schedules then prevailing, he calculated the revenue per ton of ore for the standard ore and concentrating performance to be: from lead, $5.03; from silver, $0.95; from zinc, $0.29; total, $6.27. By further application of metal prices, smelter, and freight schedules, he set up Tables 76 to 82. Application of these tables to any set of conditions within their range is illustrated in Tables 83 and 84. Case A shows a profit of 6.88¢ per ton above standard, Case B is 66.88¢ above standard, or 60¢ per ton of feed superior to Case A. Examination of details shows, however, that practically all of the advantage of Case B above standard is due to the higher lead and silver assays of the feed, whereas in Case A the small advantage over standard is due to better technology as regards zinc and silver, which overbalances the slump in lead results. Hence from a metallurgical standpoint Case A is better than Case B.

Table 75. Analysis of standard ore (*after Freeman*)

Material	Assays		
	Pb, %	Ag, oz.	Zn, %
Feed.....	14.0	3.0	10.0
Lead conc.....	70.0	14.2	5.0
Zinc conc.....	1.5	1.0	52.0
Recovery, %..	95.0	90.0	80.0

Table 76. Effect of variation of 1% in lead content of feed

Making lead concentrate, % Pb	Cents per ton of feed per unit of Pb in feed
68	34.94
69	35.44
70	35.92
71	36.40
72	36.86

Table 77. Effect of variation of 1% in zinc content of feed

Making zinc concentrate, % Zn	Cents per ton of feed per unit of Zn in feed
50	0.54
51	1.74
52	2.88
53	3.98
54	5.04

Silver. Effect of variation of 1 oz. per ton in silver content of feed is 31.76¢ per ton of feed.

Table 78. Effect of variations of 1% in lead recovery

Pb in feed, %	12	13	14	15	16
Pb in lead conc., %	Cents per ton of feed per 1% change in recovery of lead				
68	4.42	4.78	5.14	5.52	5.88
69	4.48	4.84	5.22	5.60	5.96
70	4.54	4.92	5.30	5.68	6.06
71	4.60	4.98	5.36	5.74	6.12
72	4.66	5.04	5.44	5.82	6.20

Table 79. Effect of variations of 1% in silver recovery

Oz. Ag per ton in feed	Cents per ton of feed per 1% change in recovery of silver
2	0.70
3	1.06
4	1.42
5	1.76
6	2.12

Table 80. Effect of variations of 1% in zinc recovery

Zn in feed, %	8	9	10	11	12
Zn in zinc conc., %	Cents per ton of feed per 1% change in recovery of zinc				
50	0.06	0.06	0.06	0.08	0.08
51	0.18	0.20	0.22	0.24	0.26
52	0.28	0.32	0.36	0.40	0.44
53	0.40	0.44	0.50	0.54	0.60
54	0.50	0.56	0.64	0.70	0.76

Table 81. Effect of variation of 1% in Pb assay of lead concentrate

Lead in concentrate, %		Change in value of concentrate in cents per ton of feed *a*
From	To	
68	69	6.98
69	70	6.78
70	71	6.58
71	72	6.40

a These changes are additive over the range, *e.g.*, for a change from 68 to 70% Pb in concentrate the total advantage is 6.98 + 6.78 = 13.76¢ per ton of feed.

Table 82. Effect of variation of 1% in Zn assay of zinc concentrate

Zinc in concentrate, %		Change in value of concentrate in cents per ton of feed *a*
From	To	
50	51	11.94
51	52	11.48
52	53	11.04
53	54	10.64

a See note *a*, Table 81.

Table 83. Two performances for comparison of Freeman evaluation

Case	Material	Weight, %	Assays			Distribution, %		
			Pb, %	Ag, oz.	Zn, %	Pb	Ag	Zn
A	Feed.....	100.0	12.0	5.0	11.0	100.0	100.0	100.0
	Pb conc....	16.0	69.0	23.38	5.0	92.0	94.0	7.3
	Zn conc....	16.5	1.8	1.0	54.0	2.5	3.3	81.0
	Tailing....	67.5	1.0	0.2	1.9	5.5	2.7	11.7
B	Feed.....	100.0	15.0	4.0	8.0	100.0	100.0	100.0
	Pb conc....	20.0	72.0	18.6	4.5	96.0	93.0	11.2
	Zn conc....	12.0	2.0	1.0	50.0	1.6	3.0	75.0
	Tailing....	68.0	0.5	0.2	1.6	2.4	4.0	13.8

Table 84. Comparisons of performances in Table 83 with standard performance (Table 75)

Case	Items	Variation from standard (Table 75)	Unit value of variations, ¢ per ton of feed	Total value of variations, ¢ per ton of feed	
				+	−
A	Assay of feed:				
	Pb, 12%.....	−2.0	35.44	.....	70.88
	Ag, 5 oz.....	+2.0	31.76	63.52	.....
	Zn, 11%.....	+1.0	5.04	5.04	.....
	Recoveries:				
	Pb, 92%.....	−3.0	4.48	.....	13.44
	Ag, 94%.....	+4.0	1.76	7.04	.....
	Zn, 81%.....	+1.0	0.70	0.70	.....
	Assay of conc.:				
	Pb, 69%.....	70∼69	6.78	.....	6.78
	Zn, 54%.....	52∼54	.....	21.68	.....
	Totals.....	.....	.....	97.98	91.10
	Net.....	.....	.....	6.88	.....
B	Assay of feed:				
	Pb, 15%.....	+1.0	36.86	36.86	.....
	Ag, 4 oz.....	+1.0	31.76	31.76	.....
	Zn, 8%.....	−2.0	0.54	.....	1.08
	Recoveries:				
	Pb, 96%.....	+1.0	5.82	5.82	.....
	Ag, 93%.....	+3.0	1.42	4.26	.....
	Zn, 75%.....	−5.0	0.06	.....	0.30
	Assay of conc.:				
	Pb, 72%.....	70∼72	.....	12.98	.....
	Zn, 50%.....	52∼50	.....	.....	23.42
	Totals.....	.....	.....	91.68	24.80
	Net.....	.....	.....	66.88	.....

Classifier Formulas

Efficiency. Eq. 133 may be, and ordinarily is, used, together with Eq. 132, to give an idea of the relative amounts of sand discharge and overflow. CLASSIFIER EFFICIENCY has been defined as the ratio, expressed as percentage, of the weight of classified material in the overflow to the weight of classifiable material in the feed. Overflow having the same sizing test as the feed is not said to be "classified material." Thus, if the separating size were 35-m. and 100 tons of classifier feed contained 50% of <35-m. material while the 50 tons of classifier overflow contained 90% <35-m., the 5 tons of >35-m. in the overflow plus 5 tons of <35-m. would comprise 10 tons of overflow of the same size composition as the feed. The net classified material in the overflow would, then, be 40 tons, and efficiency, $E = 100 \times 40/50 = 80\%$. This can be expressed in terms of size assays alone as follows: Let $100 - f$ = % of oversize in feed, and $100 - c$ = % of oversize in overflow. Then actual weight of oversize in overflow = $(100 - c)C/100$, and

$$E = \frac{C - \frac{(100 - c)C}{100 - f}}{\frac{fF}{100}} \times 100 = 10{,}000\,\frac{C}{F} \cdot \frac{(c - f)}{f(100 - f)} \qquad (163)$$

But $C/F = (f - t)/(c - t)$. Substituting this value for C/F in Eq. 163

$$E = \frac{10{,}000(c - f)(f - t)}{f(100 - f)(c - t)} \tag{164}$$

In the example in the preceding text $c = 90$, $t = 10$, and $f = 50$, whence $E = 80\%$. If the finished product contains only desired material, *i.e.*, $c = 100$, this equation becomes the same as the two-product recovery formula (Eq. 133).

If this formula is used for concentrating operations, assays should be expressed as percentages of valuable mineral rather than as percentages of metal, otherwise the operation is penalized (*i.e.*, efficiency is low) because it does not separate metal from the chemically combined elements.

Classifier-screen assay was proposed by Fahrenwald (*87 A 82*) in place of the usual screen assay as a basis for estimating efficiency of a two-product (*e.g.*, dealiming) classifier, on the score that sizing assays taken alone penalize the two-product classifier when the feed comprises grains of different shapes and specific gravities. The method of assay consists in making separate multiproduct (*e.g.*, 12-spigot) classifier runs on the feed and each of the products of the two-product classifier, making a sizing test of each of the multiproduct (assay) classifier products, and then plotting, for each of the two-product classifier samples, the weight percentage of overflow of the assay classifier progressively cumulated for each successively coarser product (abscissae in Fig. 169) against the corresponding per cent. undersize of the nominal mesh of separation in each of the assay-classifier products taken separately. Such curves show characteristic breaks *A–B* (Fig. 169). The abscissa of the upper inflection point *A* of the smoothed curve is taken as the assay. These values for respective two-product classifier samples should be inserted in the recovery formula (Eq. 133) to determine efficiency.

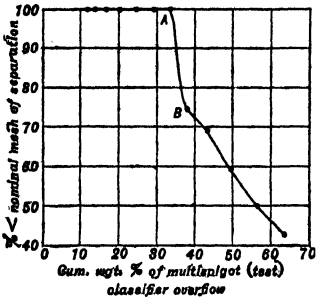

FIG. 169. Fahrenwald classifier-screen assay curve.

The method is laborious. It gives higher efficiency ratings in some cases, probably in all, than the screening assay. Whether the numbers are more significant of relative mill utilities is not apparent.

Efficiency of screens. Usual method of determination is to apply Eq. 133; Eq. 164 may also be used. See also Sec. 7, Art. 2.

Separating and blending formulas. The two-product formulas (Eqs. 124 to 133) are applicable to solution of the problems that arise in separating and blending products by size. Thus let F designate weight of feed (either in units of weight or in percentage), C = weight of the product derived from F by taking away a part of F having the weight D, and having a limiting size smaller than the limiting size of F. Then

$$F = C + D \tag{165}$$

Let B = the blend resulting from adding to F a weight A of a material having a limiting size smaller than the limiting size of F. Then

$$B = F + A \tag{166}$$

Let s = decimal fraction of F that must be taken away to produce a desired residue C, and let i = decimal fraction of F that must be added to make a desired blend B. Then

$$s = D/F \tag{167}$$

and

$$i = A/F \tag{168}$$

Let a, b, c, d, and f denote the cumulative percentages passing any screen denoted by subscript n in the products A, B, C, D, and F respectively. Then

$$Ff_n = Cc_n + Dd_n \tag{169}$$

and

$$Bb_n = Ff_n + Aa_n \tag{170}$$

Multiplying Eq. 165 by c_n, subtracting the resulting equation from Eq. 169, and solving for D/F gives

$$D/F = (f_n - c_n)/(d_n - c_n) = s \tag{171}$$

Similarly, multiplying Eq 166 by b_n, subtracting from Eq. 170, and solving for A/F gives

$$A/F = (b_n - f_n)/(a_n - b_n) = i \tag{172}$$

Substituting for C in Eq. 169 its value from Eq. 165, dividing through by F, substituting s for D/F in the resulting equation, and solving for c_n gives

$$c_n = (f_n - sd_n)/(1 - s) \tag{173}$$

Similarly substituting for B in Eq. 170 its value from Eq. 166, dividing through by F, substituting i for A/F in the resulting equation, and solving for b_n gives

$$b_n = (f_n + ia_n)/(1 + i) \tag{174}$$

If the added material in blending is coarser than F, transpose a_n and f_n in Eqs. 172 and 174; similarly if the subtracted material is removed by a scalping screen, transpose c_n and d_n in Eqs. 171 and 173.

Tonnages in Milling Circuits

Tonnages may frequently be determined by application of the two-product formulas 132 and 133. Fig. 170 shows four typical closed crushing circuits.

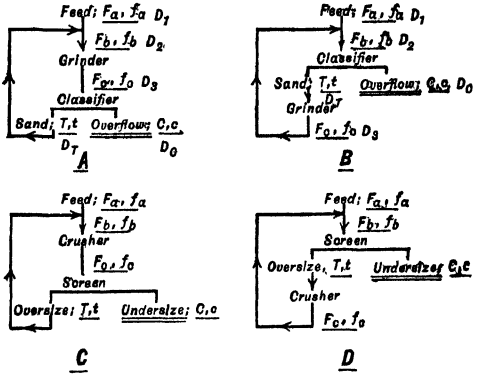

FIG. 170. Typical closed crushing circuits.

In Fig. 170, item A: $K = F_c/C = (c - t)/(f_c - t)$ from Eq. 132. But $C = F_a$. Hence, $F_c = F_a(c - t)/(f_c - t) = F_b$. And

$$T = F_c - C = \frac{F_a(c - t)}{(f_c - t)} - F_a = \frac{F_a(c - f_c)}{(f_c - t)} \tag{175}$$

Also

$$f_b = (F_a f_a + Tt)/(F_a + T) \tag{176}$$

In Fig. 170, item B: $K = F_b/C = (c - t)/(f_b - t)$ from Eq. 132. But $C = F_a$, hence $F_b = F_a(c - t)/(f_b - t)$; and

$$T = F_c = F_b - C = F_b - \frac{F_b(f_b - t)}{c - t} = \frac{F_b(c - f_b)}{c - t} \tag{177}$$

$$f_b = (F_a f_a + F_c f_c)/(F_a + F_c) \tag{178}$$

$$F_c = F_a(f_a - f_b)/(f_b - f_c) \tag{179}$$

From inspection of the figure, $F_a f_a + F_c f_c = Tt + Cc$. But $F_c = T$ and $F_a = C$, hence $T(f_c - t) = F_a(c - f_a)$, and $T = F_a(c - f_a)/(f_c - t)$.

Adding C to both sides of the preceding equation, $T + C = F_a(c - f_a)/(f_c - t) + C$. But $T + C = F_b$ and $C = F_a$,

hence

$$F_b = F_a\left(\frac{c - f_a}{f_c - t} + 1\right) \tag{180}$$

By inspection of Fig. 170, item B: $F_b f_b = F_a f_a + F_c f_c$.

$$f_b = \frac{F_a f_a + F_c f_c}{F_b} = \frac{F_a f_a + \dfrac{F_a(c - f_a) f_c}{(f_c - t)}}{F_a\left(\dfrac{c - f_a}{f_c - t} + 1\right)} = \frac{cf_c - tf_a}{c - f_a + f_c - t} \tag{181}$$

$$f_c = \frac{F_a(c - f_a - t) + Ftt}{F_b - F_a} \tag{182}$$

$$f_a = \frac{f_c(f_b - c) + f_b(c - t)}{f_b - t} = c + (f_c - t)[1 - (F_b/F_a)] \tag{183}$$

By Eq. 133 the value of R in Fig. 170, item B, is

$$R = c(f_b - t)/f_b(c - t) \tag{184}$$

Substituting in this equation the value of f_b,

$$R = \frac{c(f_c - t)}{cf_c - tf_a} \tag{185}$$

Calculations for the cases shown in Fig. 170, items C and D are identical with those for A and B respectively.

Circulating loads (*CL*) in closed circuits may be estimated in a number of ways.

By size analyses. For Fig. 170, items A and B, above,

Item A: $$\% \; CL = 100T/F_a = 100\,(c - f_c)/(f_c - t) \tag{186}$$

Item B: $$\% \; CL = 100T/F_a = 100F_c/F_a = 100(f_a - f_b)/(f_b - f_c) = 100(c - f_a)/(f_c - t) \tag{187}$$

By means of the identities given above, the circulating load may be written in such form as will utilize the data at hand.

By dilutions. If dilutions or specific gravity of pulps (from which dilutions may be calculated) are known, then per cent. circulating load may be calculated as follows:

Item A: $F_cD_3 = CD_c + TD_t$ (water balance). But since $F_c = F_a + T$ and $C = F_a$, $(F_a + T)D_3 = F_aD_c + TD_t$; whence $(1 + T/F_a)D_3 = D_c + (T/F_a)D_t$, and

$$\% \; CL = 100T/F_a = 100\,(D_c - D_3)/(D_3 - D_t) \tag{188}$$

Item B: $F_aD_1 + F_cD_3 = F_bD_2$ (water balance) $= (F_a + F_c)D_2$; whence $D_1 + D_3(F_c/F_a) = D_2 + D_2(F_c/F_a)$, and

$$\% \; CL = 100F_c/F_a = (D_2 - D_1)/(D_3 - D_2) \tag{189}$$

Tonnage of circulating load. If the actual circulating tonnage is required, the weight of feed or classifier overflow must be known. When the assay formulas are used and screen analyses constitute the assay it is wise to calculate the per cent. circulating load for more than one size and use the average figure; in taking the average, reject all computed circulating loads that are obviously out of line, probably on account of errors in sampling or sieve analysis.

By return tonnage. Determine from the sizing tests of feed and product, the decimal fraction r of the original feed weight F_0 requiring crushing (*i.e.*, with fines eliminated) that failed to be reduced in a single pass. By application of the formula for the sum of a geometric series (Sec. 21, Art. **7**), circulating load

$$CL = F_0/(1 - r) \tag{190}$$

Thus if 100 tons per day feed to a set of rolls contained 30 tons undersize of the limiting screen, $F_0 = 70$, and if the product of a single pass showed 65 tons undersize, $r = 35/70 = 0.5$, and S (total feed to the rolls per 24 hr.) $= 30 + 70/(1 - 0.5) = 170$. If the screen returns some undersize with the oversize, r must be increased accordingly.

Dilution method may be employed in the determination of the tonnage in a pulp stream, which, for one reason or another, cannot be adequately time-sampled. Measure the specific gravity, at the point of interest, before and after the addition of a known volume of water. If D_1 and D_2 denote dilutions before and after, and V denotes the volume of water added, then (by water balance) $FD_1 + V = FD_2$ whence tonnage in circuit

$$F = V/(D_2 - D_1) \tag{191}$$

A variant of this method is used at OHIO COPPER CO. to determine tailing tonnage. A known volume V of zinc sulphate solution of known concentration is added to the mill tailing pulp at some regular rate. The pulp is sampled downstream, and the sample titrated for zinc. If D_1 = dilution of $ZnSO_4$ added, D_2 = dilution of $ZnSO_4$ in sample, D_3 = dilution of pulp, then tonnage of pulp

$$F = \frac{V}{D_3}\left(\frac{D_2}{D_1} - 1\right) \tag{192}$$

Cyanidation

Tonnage and recovery calculations follow method outlined above, and involve no new method or principles.

Let F weight of feed = 1; C = weight of concentrate (if made), T = weight of tailing from concentrating operation (= F, if no concentrate is made), A = weight of sand feed, B = weight of slime feed, X = weight of sand tailing, and Y = weight of slime tailing, all expressed as decimal parts of F; and f, c, t, a, b, x, and y = respective assays of the above products.

Then $F = C + T$; $T = A + B$; $f = cC + tT$; $Tt = aA + bB$; $Tt = f - cC$. But $T = F - C = 1 - C$. Hence $(1 - C)t = f - cC$ and

$$C = (f - t)/(c - t) \tag{193}$$

Similarly

$$T = (c - f)/(c - t) \tag{194}$$

$Aa = Tt - Bb$. But $B = T - A$, hence $Aa = Tt - (T - A)b$, and $A/T = (t - b)/(a - b)$. Substitute value of T from Eq. 194, then

$$A = \frac{(c - f)(t - b)}{(c - t)(a - b)} \tag{195}$$

$$B = T - A = \frac{c - f}{c - t} - \frac{(c - f)(t - b)}{(c - t)(a - b)} = \frac{(c - f)(t - a)}{(c - t)(b - a)} \tag{196}$$

$R = [Cc + (Aa - Xx) + (Bb - Yy)]/Ff$. But $F = 1$, and for all practical purposes, $A = X$ and $B = Y$. Hence, substituting A for X and B for Y and then substituting for C, A, and B their equivalents in terms of assays above given, and clearing

$$R = \frac{c(f - t) + \frac{c - f}{a - b}[(t - b)(a - x) - (t - a)(b - y)]}{f(c - t)} \tag{197}$$

Formulas Involving Sorting, Roughing, Etc.

The following formulas are useful to determine the monetary saving to be expected from sorting, roughing, or other treatment in which a finished product, either concentrate or tailing, is to be removed in advance of the place that it is removed in the treatment scheme taken as standard.

Removal of concentrate. When the material to be removed is finished concentrate, let H and h = weight in tons and assay respectively of original feed; P and p = weight in tons and assay respectively of the concentrate to be produced by the proposed new operation; M and m = weight in tons and assay respectively of the residue from the proposed new operation; T = tons of final mill tailing without the new operation; T' = tons of final mill tailing to be produced from M tons of residue from the new operation; C = tons of mill concentrate under normal operation; and C' = tons of mill concentrate to be produced from M tons of residue from the new operation; c and t = assay respectively of C, C' and T, T'; V = value in dollars per unit of metal in concentrate to be produced by the new operation; V' = value in dollars per unit of metal in mill concentrate produced by either operation, R = cost of new operation in dollars per ton of concentrate produced thereby (P); S = cost in dollars per ton of milling H tons of original ore; and S' = cost in dollars per ton of milling M tons of residue from the new operation.

The assumption that the assays of tailing and concentrate made from original and sorted ore would be the same is justified by experience to the effect that relatively small changes in the tonnage or assay of mill feed have little effect on the assays of mill products. The values assigned to V and V' should be net and should take full account of penalties, freight, smelting charges, etc.

If the proposed operation is employed, the net return from P tons of concentrate so produced is its value less its cost of production = $PpV - PR$. Return from milling M tons of residue = $C'cV' - MS'$, and total return = $P(pV - R) + C'cV' - MS'$.

If the operation is omitted and the total feed is treated the same as M above, the return = $CcV' - HS$.

The total gain in dollars (or loss, if the sign is negative) to be expected from adoption of the proposed operation is

$$G_T = [P(pV - R) + C'cV' - MS'] - (CcV' - HS)$$

The gain per ton of original feed is

$$G = \frac{P}{H}(pV - R) - cV'\left(\frac{C}{H} - \frac{C'}{H}\right) - \frac{M}{H}S' + S \tag{198}$$

But $P/H = (h - m)/(p - m)$, from Eq. 132; $C/H = (h - t)/(c - t)$, from Eq. 132; $M/H = (p - h)/(p - m)$ (from the relation $M = H - P$); $C' = M(m - t)/(c - t)$, from Eq. 132. Then

$$\frac{C'}{H} = \frac{M}{H}\left(\frac{m - t}{c - t}\right) = \left(\frac{p - h}{p - m}\right)\left(\frac{m - t}{c - t}\right)$$

whence, by substitution of the above values in Eq. 198

$$G = \frac{(h-m)(pV-R)-(p-h)S'}{p-m} - cV'\left[\frac{h-t}{c-t} - \frac{(p-h)(m-t)}{(p-m)(c-t)}\right] = S \quad (199)$$

Removal of waste. If, instead of concentrate, W tons of waste assaying w is discarded at a cost of R dollars per ton discarded, then when the new operation is employed, the loss due to discarding waste is $= WR$, and the return from milling the remainder $= C'cV' - MS$. Net return $= C'cV' - MS - WR$.

If the proposed operation is omitted, the net return $= CcV' - HS$, whence gain G_T (or loss, if of negative sign) to be expected from installation of the new operation $= C'cV' - MS' - WR - CcV' + HS$, and

$$G = S - cV'\left(\frac{C}{H} - \frac{C'}{H}\right) - \frac{M}{H}S' - \frac{W}{H}R$$

Substituting assay values, as in the preceding development,

$$G = S - \frac{m-h}{m-w}\left[cV'\left(\frac{w-t}{c-t}\right) + R\right] - \frac{h-w}{m-w}S' \quad (200)$$

Saving (or loss) to be expected from cleaning a salable product instead of shipping directly may be obtained by a similar method of analysis.

Let H' = tons of material, h' = assay of H', C' = tons of cleaned product, c' = assay of C', T' = tons of material that will be reject of the cleaning operation, t' = assay of T', R = cost of treatment in dollars per ton of H', V = value, in dollars per unit of metal, of C'; V' = value, in dollars per unit of metal, of H'.

If the material is shipped directly, the return $= H'h'V'$. If cleaning is practiced, the return $= C'c'V - H'R$.

Gain G_T (or loss, if negative) to be expected from the proposed cleaning operation $= (C'c'V - H'R) - H'h'V' = C'c'V - H'(R + h'V')$, whence

$$G = \frac{C'c'V}{H'} - (R + h'V') = \frac{c'V(h'-t')}{c'-t'} - (R + h'V') \quad (201)$$

Saving to be expected by further treatment of a tailing product is the excess value of the concentrate produced by the treatment over the cost of treatment.

If H'' = tons of original tailing, C'' = tons of additional concentrate produced by further treatment of H'', T'' = tons of cleaned tailing, h'', c'', t'' = assays of H'', C'', and T'', respectively, R = cost of treatment per ton of H'', V = value in dollars per unit of metal in the concentrate C''.

Then gain G_T (or loss, if of negative sign) to be expected from the proposed additional treatment $= C''c''V - H''R$, whence

$$G = \frac{C''}{H''}c''V - R = \frac{c''(h''-t'')}{c''-t''}V - R \quad (202)$$

Specific-Gravity Assay

When an ore is a mixture of two minerals only or of one valuable mineral and a mixture of gangue minerals whose relative proportions are substantially constant, it is possible to make rapid approximate assays of a mixture of valuable mineral and gangue by determining the specific gravity of the mixture, provided the individual specific gravities of valuable mineral and gangue are already known. The usual method is by use of a specific-gravity flask.

Weigh the flask empty and when full of water. Dry the flask, introduce the ore sample, weigh; fill with water, taking care to remove all air bubbles, and again weigh. In centimeter-gram units, if S_o = specific gravity of ore, S_m of "mineral" and S_g of gangue; F = weight of dry flask, W = weight of water required to fill the flask, O = weight of dry ore, and T = total weight of flask + ore + water, then the weight of water required to fill the flask, with ore in it $= T - (O + F)$ = volume of water in flask, and volume of ore in flask $= W - [T - (O + F)]$.

$$S_o = \frac{O}{W - [T - (O + F)]} = \frac{O}{F + W + O - T} \quad (203)$$

If m = per cent. of "mineral" in ore = weight of mineral per unit weight of ore; $1 - m$ = per cent. of gangue; m/S_m = volume of "mineral" per unit weight of ore; $(1 - m)/S_g$ = volume of gangue per unit weight of ore; $1/S_o$ = volume of unit weight of ore.

Then $m/S_m + (1 - m)/S_g - 1/S_o = 0$, and

$$m = 100 \frac{S_m(S_o - S_g)}{S_o(S_m - S_g)} \tag{204}$$

Voids

Let w = weight of solid per unit volume. If material is moist, let w include also the weight of moisture. Let S = sp. gr. of dry solid, p = % solids, V = % of VOIDS = % of unit volume unoccupied when that volume contains the weight w of solid or solid + water; B = % of unit volume occupied by air, H = % occupied by water and T = % occupied by air + water. Quantities p, V, B, H, and T are expressed as decimal parts of the unit, and gram-centimeter units are most readily used.

For dry material,

$$V = 1 - w/S \tag{205}$$

For wet material pw = weight of dry solid in unit volume; pw/S = volume of solid; and

$$T = 1 - wp/S \tag{206}$$

The weight of water in a weight w of wet material = $w - pw$. Since the numbers representing weight and volumes of water are interchangeable in gram-centimeter measure

$$H = w(1 - p) \tag{207}$$

$$B = T - H = \frac{wp(S - 1) - S(w - 1)}{S} \tag{208}$$

Voids in mixed sizes. Voids in broken rock smaller than 3-in. range between 40 and 45% when fines are present and 45 to 50% with fines removed. (*Bul 5 UI # 23.*) Furnas (*RI 2894*) attempted to generalize this relationship. He found (Fig. 171) that the per-

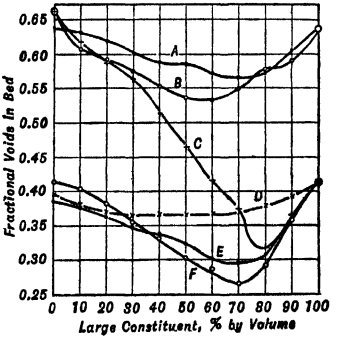

FIG. 171. Experimental determinations of voids in binary size mixtures.

centage voids differed with the size composition of the mixtures and, on the basis of these findings, presented the curves (Fig. 172) as representing the variations in voids of mixtures of two sizes of different size ratios in different proportions. Actual mixtures of broken materials of size compositions approximating these will fall consistently above the curves by amounts dependent upon the irregularity in particle shape, and the widths of the size bands of the components (see Fig. 171). The indications of the curves as to the trends of void space with size composition are, however, useful. The minima are, of course, of great economic importance in designing aggregates for concrete, in control of leaching beds, etc.

Porous materials have an intraparticle void space in addition to the interstitial void space between the particles. To determine (*RI 3047*), weigh sample in air = w_1; evacuate at 2 to 3 mm. Hg, saturate with water, and weigh in water = w_2; coat particles with paraffin at its melting point, cool, and

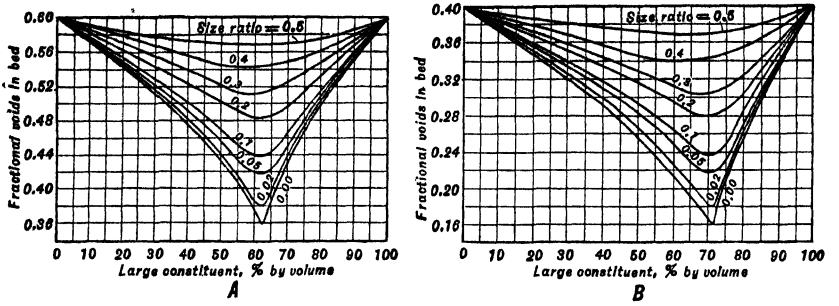

FIG. 172. Curves for design of size mixtures for predetermined void space (*after Furnas*).

weigh in air = w_3; weigh paraffin-coated particles in water = w_4. Let V denote total volume of intraparticle voids. Then

$$V = \frac{1}{G_l}\left\{w_2 - w_4 + (w_3 - w_1)\frac{(G_p - G_l)}{G_l}\right\} \tag{209}$$

where G_p = density of paraffin and G_l = density of water.

Specific volume is defined as the weight of dry solid per unit volume of broken solid and is commonly stated in lb. per cu. ft. If Q = specific volume in gram-centimeter units, m = percentage of moisture in the mass of broken solid by weight, and v = percentage moisture by volume, then the volume of actual solid + water per unit volume of broken material = $1 - V$ and the actual solid in this weight is $Q = S(1 - V)(1 - v)$. But $v = mS/(mS + 1 - m)$ (from Eq. 221), hence

$$Q = S(1 - V)\left[\frac{1 - m}{m(s - 1) + 1}\right] \tag{210}$$

In common units this becomes

$$Q = 62.5S(1 - V)\left[\frac{1 - m}{m(S - 1) + 1}\right] \text{ lb. per cu. ft.} \tag{211}$$

Pulp Consistency

Let p = decimal fraction of solids in pulp, by weight; S_s = specific gravity of solid; S_p = specific gravity of pulp; D = DILUTION = water to solid ratio by weight, usually written, *e.g.*, 6 : 1, 3.2 : 1, etc.

Then pS_p = weight of dry solids in 1 cc. of pulp, pS_p/S_s = volume of dry solids in 1 cc. of pulp; and $1 - (pS_p/S_s)$ = volume of water in 1 cc. of pulp (or weight of water if water density is unity), from which

$$S_p = pS_p + 1 - \frac{pS_p}{S_s} = \frac{S_s}{p + S_s(1 - p)} = \frac{D + 1}{D + \frac{1}{S_s}} \tag{212}$$

$$p = \frac{S_s(S_p - 1)}{S_p(S_s - 1)} = \frac{1}{D + 1} \tag{213}$$

$$S_s = \frac{pS_p}{1 - S_p(1 - p)} = \frac{S_p}{1 - D(S_p - 1)} \tag{214}$$

$$D = \frac{1 - p}{p} = \frac{S_s - S_p}{S_s(S_p - 1)} = \frac{1}{p} - 1 \tag{215}$$

The relation between p, S_p, and S_s are shown graphically in Fig. 173.

If Z = SOLID FACTOR = tons solid per FLUID TON (= 32 cu. ft.) of pulp; J = fluid tons of pulp per ton of dry solids; and q = % solids by volume, then, since the weight of 1 cu. ft. of pulp = $62.5S_p$ lb., the weight of one fluid ton = $32 \times 62.5S_p$ and

$$Z = \frac{32 \times 62.5S_p \times p}{2{,}000} = pS_p \tag{216}$$

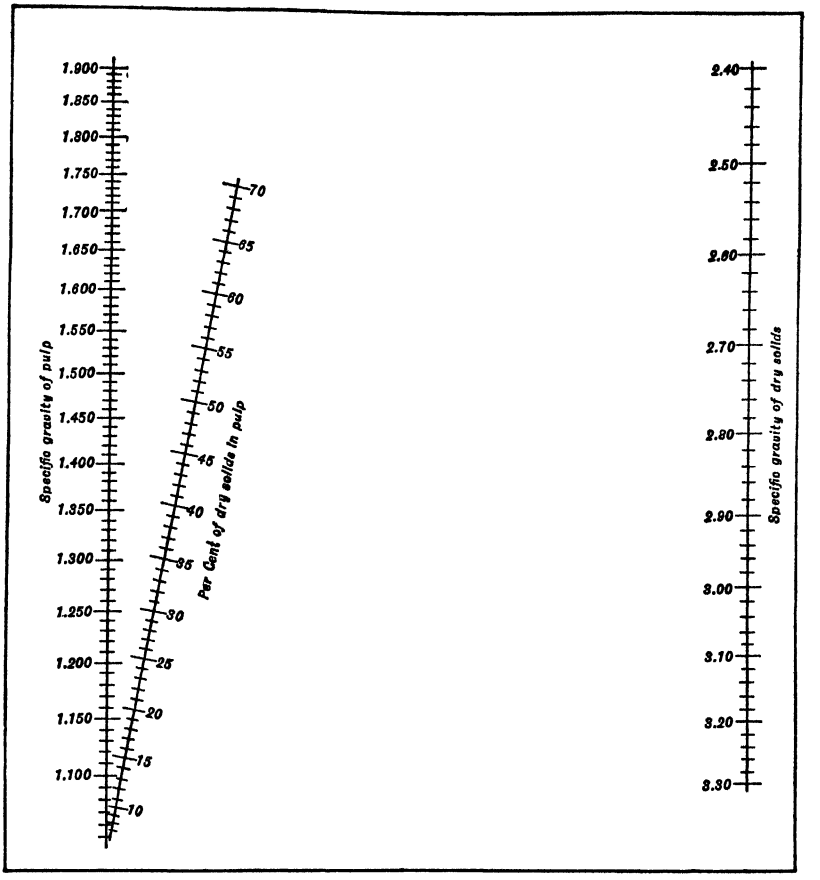

FIG. 173. Pulp density chart (*after Heinz J 457*).

By substitution in Eq. 216 of values of p and D from Eqs. 212 to 215

$$Z = \frac{S_p}{D+1} = \frac{pS_s}{S_s - p(S_s - 1)} = \frac{S_s}{DS_s + 1} = \frac{S_s(S_p - 1)}{S_s - 1} \tag{217}$$

By definition $J = 1/Z$. Hence, by Eqs. 216 and 217

$$J = 1/pS_p = (D+1)/d \tag{218}$$

By definition $q = \frac{Z(2{,}000)}{S_s(62.5 \times 32)} = \frac{Z}{S_s}$, hence, by Eqs. 212 and 217

$$q = \frac{S_p - 1}{S_s - 1} = \frac{p}{S_s - p(S_s - 1)} \tag{219}$$

Counting Assay

If all particles are of substantially the same shape (that they are of substantially the same intermediate dimension may be assured by sizing), the volume percentages are equal to the number percentages. If there is a distinct difference in average shape of particles, the number percentages must be adjusted by factors expressing relative volumes of the mean shapes, in order to get volume percentages. If v = per cent. by volume of

"mineral" in sample = volume per unit volume, and S_m and S_g = specific gravities of "mineral" and gangue respectively, then weight of "mineral" in a unit volume of sample = vS_m and weight of gangue = $(1 - v)S_g$. The percentage of mineral by weight is

$$m = \frac{vS_m}{vS_m + (1 - v)S_g} = \frac{vS_m}{v(S_m - S_g) + S_g} \tag{220}$$

$$v = \frac{mS_g}{mS_g + S_m(1 - m)} \tag{221}$$

These formulas are applicable to mixtures of solid and water, in which case, if m and v are taken as percentages of solid, S_m is specific gravity of solid and $S_g = 1$.

SECTION 20

DESIGN AND CONSTRUCTION OF ORE-TREATMENT PLANTS

BY THE LATE

JOHN M. CALLOW

AND

THE STAFF OF GENERAL ENGINEERING CO.

ART.		PAGE
1.	Situation of mill with respect to mine. Transporting ore to mill. Storage for ore	01
2.	Water supply. Conservation and storage. Hydrostatics. Flow of water; orifices, weirs, pipes, and channels. Varieties of pipe. Design of pipes and ditches	12
3.	Situation of mill with respect to tailing disposal. Launders; tailing dams; elevation of tailings	34
4.	Topography of millsite; types of mill	41
5.	Materials for mill construction; foundations, framework, walls, roof, windows, floors, painting	44
6.	Arrangement of mill equipment; chutes and launders, conveyors, elevators	47
7.	Driving power for mills. Requirements and methods. Motors, types and applicabilities. Power generation and transmission	53
8.	Lighting; lamps and reflectors; spacing.	66
9.	Heating; losses of heat; radiators; unit heaters	68
10.	Fire protection; extinguishers, sprinklers; insurance	71
11.	Dust collection; suction and precipitation	73
12.	Shops, repairs, supplies	75
13.	Practical design; preliminary, detailed	76
14.	Cost estimating; preliminary, final	80

1. SITUATION OF MILL WITH RESPECT TO MINE

General principles. Since one of the principal purposes of concentration is to reduce the expense of delivering mine product to the smelter, a concentrating mill should ordinarily be situated as close as is practicable to the source of its ore supply. In general those mines at which the ratio of concentration is high are most benefited by placing the mill near the mine, but this conclusion may be modified by one or more of the following facts: (*a*) freight rates of public carriers usually advance in direct relation to the unit value of the material carried (see Tables 8 and 9); (*b*) mill concentrate produced by wet methods may contain from 4 to 15% water, even after draining or filtering; (*c*) the site near the mine may lack adequate supply of mill water with low expense for elevation, or (*d*) suitable space for tailing disposal, or (*e*) advantageous topography for a mill site. Examples of a variety of practices are given in Tables 1 and 2.

In a large-scale operation, the ability to move great tonnages by the most efficient available motive power over privately owned track to a mill adjacent to or in the direction of the smelter may offset some of the advantages of proximity of mill to mine. Some notable examples of long hauls are given in Table 3.

Of the mills cited in Table 3, those of ANACONDA, NEVADA CONSOLIDATED, and RAY CONSOLIDATED are closely adjacent to smelters; water supply was an important consideration in selecting sites for the CHINO, COPPER RANGE, and NEVADA CONSOLIDATED mills; while the disposal of tailing contributed largely to the selection of sites for NEVADA CONSOLIDATED and the UTAH COPPER CO.'s mills. In no case, however, was the decision based upon one favorable condition alone.

Placing a mill near the mine it serves tends to minimize irregularities in receipt of ore. Mill stoppage for lack of ore can be guarded against to a limited extent by providing storage bins, but it is seldom practicable to store more than two or three days' supply, and some large mills would have to cease operations if the ore supply were interrupted for a single day (see Table 13).

Table 1. Concentration ratios and mill location, 1924

Mine and mill	Assays of ores and concentrates	Tons feed per ton of concentrate	Per cent. water in concentrate	Distance hauled miles
Alaska-Gastineau, Alaska	Ore ..... Conc. 33% Pb, 16 oz. Au, 32 oz. Ag	1,157	 10	3.5 2,000 *b*
American Zinc, Tenn.	Ore 3.77% Zn Conc. 60% Zn	19.7	 8	0 & 0.3 550
Britannia Mg. & Smltg., B. C.	Ore 1.6% Cu Conc. 12.0% Cu	10	 10–12	5 130 *b*
Cananea, Mex.	Ore 1.76% Cu Conc. 5.6% Cu	3.5	 10	1–3 1
Calumet & Hecla, Mich.	Ore 1.75% Cu Conc. 62% Cu	35	 12	5 0.5
Chino, Ariz.	Ore 1.6% Cu Conc. 15.5% Cu	14–22	 14	10 130
Copper Range, Mich.	Ore 1.88% Cu Conc. 65% Cu	40	..... 7.5	14 19
Engels, Calif.	Ore 2.25% Cu Conc. 30% Cu	15	 12	0 & 2.5 600
Federal No. 3, Idaho	Ore 3.0% Pb Conc. 70% Pb *c*, 49% Pb *d*	27	..... 4 *c*, 6 *d*	1–2 100
Federal No. 4, Idaho	Ore 4.75% Pb Conc. 73% Pb *c*, 55% Pb *d*	18.5	..... 4*c*, 6 *d*	0 100
Hedley, B. C.	Ore $10.50 Au *a* Conc. 35% As, 2.5 oz. Au	16–20	 10	3.5 400
Inspiration, Ariz.	Ore 1.14% Cu Conc. 30.2% Cu	27.5	 15	1.6 1
Joplin District, Mo.	Ore 0.5–1.25% Zn Conc. 60% Zn	35–55	....	0–0.5 50–1,000
Miami, Ariz.	Ore 2.00% Cu Conc. 42% Cu	27	 10–12	0 1
Moctezuma, Mex.	Ore 3.3% Cu Conc. 12.8% Cu	4.5	 5	5 78
Phelps Dodge, Morenci, Ariz.	Ore 1.8% Cu Conc. 12% Cu	9	..... 9.5 *c*, 13 *d*	0–0.75 0.75
Ray, Ariz.	Ore 1.66% Cu Conc. 19% Cu	13–15	 12	25 1
St. Joseph Lead Co., Bonne Terre, Mo.	Ore 4.0% Pb Conc. 70% Pb	20	 5	0 30
Timber Butte, Mont.	Ore 15% Zn Conc. 54% Zn	3.5	..... 8.5	 1,200
Utah Copper, Utah	Ore 1.2% Cu Conc. 16.5% Cu	17.5	 13–14	18–20 3

a In arsenopyrite. *b* Steamer. *c* Table. *d* Flotation.

Methods of Transporting Ore to Mill

The following means are available: (1) Mine-car or other small-car tramming: (*a*) hand; (*b*) animal; (*c*) cable; (*d*) storage-battery locomotive; (*e*) trolley locomotive; (*f*) gasoline and/or Diesel locomotive; (*g*) narrow-gage steam locomotive; (*h*) mono-rail system. (2) Wagon or truck haulage: (*a*) animal; (*b*) motor trucks; (*c*) tractors and trailers. (3) Belt conveyors. (4) Aerial tramway: (*a*) reversible; (*b*) continuous. (5) Standard-gage railroad.

Hand tramming is frequently adopted at small mines for distances up to 300 ft., especially when the mine cars themselves can be conveniently trammed to the mill. The track can usually be maintained in better condition than underground, and can be laid to the most advantageous grade, say 0.6% in favor of the loaded run. On well-graded track, with the usual metal-mine car in good condition, one man can push a net load of 2,000 lb.

Table 2. Concentration ratios and mill location, 1938

Mine and mill	Assays of ores and concentrates	Tons ore per ton of concentrate	Per cent. water in concentrate	Distance hauled, miles
American Zinc, Tenn.	Ore 3% Zn Conc. 63% Zn	20.8	 6	0 & 0.3 400
Bunker Hill & Sullivan, Idaho	Ore 8.6% Pb, 5% Zn, 3.6 oz. Ag Conc. 60% Pb, 52% Zn, 25 oz. Ag	5.1	..... 6.5	2 1
Calumet & Hecla, Mich.	Ore 1.5% Cu Conc. 75% Cu	50	 4	10 1
Climax, Colo.	Ore 0.6% MoS_2 Conc. 85% MoS_2	157	 3	1 .....
Demonstration, P. I.	Ore 5% Cu, 6.8% Pb, 0.3 oz. Au, 1.8% Zn, 0.4 oz. Ag Conc. 8 oz. Au, 7 oz. Ag	24	 4	0.2 6,000 *a*
Eagle Picher Mg. Co., Ariz.	Ore 3.1% Pb, 3% Zn, 5.2 oz. Ag Conc. 42% Pb, 55% Zn, 13 oz. Ag	9.75	 10	0 .....
Federal M. & S. Co., Idaho	Ore 7.9% Pb, 6.8% Zn, 2.8 oz. Ag Conc. 77% Pb, 55% Zn, 25 oz. Ag	10.3	..... 8.3	2 250
Inspiration Cop. Co., Ariz.	Ore 1.1% Cu Conc. 35.9% Cu	41.3	..... 10.1	1.6 1
Lepanto, P. I.	Ore 2.7% Cu, 0.03 oz. Au, 0.75 oz. Ag Conc. 25% Cu, 0.2 oz. Au, 5 oz. Ag	10	 7	0.27 .....
Magma, Ariz.	Ore 5.1% Cu Conc. 12.9% Cu	2.6	 10	0.5 0.5
Matahambre, Cuba	Ore 4.75% Cu Conc. 30.5% Cu	6.4	..... 7.5	0.15 1,400 *a*
Miami Copper Co., Ariz.	Ore 0.6% Cu Conc. 36.3% Cu	84	..... 9.6	0.15 2
Molybdenum Corp. Am., N. M.	Ore 4% MoS_2 Conc. 76% MoS_2	20	 3	1.5 2,000
Nevada-Mass., Nev.	Ore 1% WO_3 Conc. 76% WO_3	110	 0	2 2,000
Pend Oreille, Idaho	Ore 2% Pb, 7% Zn Conc. 82% Pb, 62% Zn	8	 9	0.15 2,000
Peru, N. M.	Ore 6 to 8% Zn Conc. 54.5% Zn	7.8	 9	54 460
Silver King Mg. Co., Utah	Ore 10% Pb, 9% Zn, 13 oz. Ag Conc. 65% Pb, 62% Zn, 65 oz. Ag	3.8	 8	0 30–1,200
Talache Mg. Co., Idaho	Ore 0.2 oz. Au Conc. 4 to 9 oz. Au	50–90	 9	0.12 500

a By steamer.

at a speed of 1 1/2 mi. per hr. (130 ft. per min.); maintaining the same speed on the return trip would give an ore-carrying capacity of 0.75 ton-mi. per hr. *in motion*. Dumping time, which is approximately 1/2 min., will range from 40% of the total working time (excluding loading) on a 50-ft. tramming distance to 10% on a 300-ft. tram. Loading time will vary between the extremes of 2 min. (from chutes) to 30 min. per ton (shoveling from rough bottom). (For further data on loading and tramming by hand, see *Peele*.)

Animal tramming is applied to trains of mine cars, and also to one or several cars of large size receiving ore from a dumping or storage pocket. The method is not more efficient than hand tramming over short distances and for traffic of less than 2 ore-ton-mi. per hr., but competes favorably with mechanical systems up to 25 ore-ton-mi. per hr. at distances up to 1/2 mi. and with grades below 1.25%. On good track, with moderate grades in favor of the load, one mule can pull a gross load of 7 to 12 tons, and haul from 2 to 4 ore-ton-mi. per hr. of total working time at distances of 700 to 3,000 ft. The tractive force of an average horse, at 2.5 mi. per hr. for 8 hr. is 125 lb.

Cable haulage may be applied to gravity-plane, engine-plane, or tail-rope system.

Gravity plane. Loaded cars, of modern design and well lubricated, will run freely down a grade of 2%, but if empty cars are to be hauled up by the action of the descending loads,

Table 3. Haulage of ore over privately controlled standard-gage railways

Mine or carrier	Year *f*	Miles hauled	Tonnage	Cost *f*		
				Total	Per ton, cents	Per ton-mile, cents
Butte, A. & P. *d*	1922	32	90,348,000 *a*	$991,732 *b*	.....	1.098 *c*
Chino (via A. T. & S. F.)	1922	10	1,416,869	154,198	10.8	1.08
Copper Range	1922	14	33,396,000 *a*	884,483 *b*	.....	2.648 *c*
Duluth & Iron Range	1922	227	507,545,000 *a*	6,037,000 *b*	.....	1.190 *c*
Duluth, Missabe & Nor	1922	335	1,194,982,000 *a*	13,301,000 *b*	.....	1.113 *c*
Nevada Consolidated	1922	26	518,523	195,899	37.7	1.45
Ray Consolidated	1922	25 *e*	1,178,350	258,437	22.0	0.88
United Verde	1918	6.7	861,250	198,687	23.0	3.4
United Verde Ext	1922	6.1	136,980	22,148	16.2	2.6
Utah Copper	1922	18	4,364,251	651,096	15.0	0.83

a Revenue-ton-miles. *c* Freight earnings per revenue-ton-mile.
b Freight earnings. *d* Electrically operated; see page **20–07**.
e Of which 10 miles over private road; remainder by track license over Arizona Eastern R. R.
f While costs of fuel and labor have increased in the interim, improvements in plant and economies in operation substantially offset the increase.

transmitted through a cable, 5 to 5 1/2% is about the minimum grade that will operate with a plane 500 ft. long; longer planes require steeper grades, up to 10 or 15%. Cars or skips discharging automatically into a receiving bin at the bottom of the incline are frequently used.

Engine plane may be operated on any grade steep enough to allow the empty trip to descend by gravity, while overcoming the added friction of cable and engine drum. In practice, 3 1/2% has been found to be the minimum satisfactory grade.

The NIPISSING low-grade mill, at Cobalt, received part of its ore by an engine plane 2,200 ft. long, hauling a trip of 4 cars, or 3.85 tons of ore, up a steady grade of 10%, with a 30-hp. electric hoist and a 1/2-in. cable. Operating at 90% capacity, the plane made one trip in 25 min. The total cost of operation (1922) was 34.2¢ per ton hauled, or 82¢ per ton-mi. The cost of installation, in 1913, was $6,500. At the TROJAN mine, S. D., one electric hoist was used both to haul trips of eight 1.5-ton cars up a 1,500-ft., 6% slope out of the mine, and to lower them 2,000 ft. down a 15% incline to a gathering station from which they were hauled to the mill by gasoline locomotive.

Tail-rope system is best adapted to nearly level or irregular grades, and can be applied to curved track; it is commonly used at coal mines.

A well-known application to surface tramming in the United States is in the TRI-STATE DISTRICT, hauling ore from one or more outlying shafts to a central mill, an average distance of 800 ft., with 1/2 mi. as a maximum (10-ton steam and 5-ton gasoline locomotives are used for the same service). Track is 36-in. gage with 40-lb. rail, and cost (1923) an average of $1.56 per ft., including grading, laying, and all track materials. Cars are of steel, with roller bearings, and of 2.5- and 3.5-ton capacity (44 and 62 cu. ft.). At GOLDEN ROD mill (H. H. Wallower, *PC*) a 14-car train with gross weight of 60 tons was hauled by a tail-rope system a distance of 1,800 ft. over level track containing frequent curves. The driver was a band-friction, tandem, double-drum hoist, belt-driven by 75-hp. motor; after starting, little power was needed. A total of 144,000 tons was trammed in 1923 at the following costs per ton: Labor, 4.09¢; power, 0.27¢; supplies, 1.824¢; total, 6.18¢; total cost per ton-mi., 18.13¢. Limitations of the tail-rope system as to grades and distances have not been reached in the Tri-State district; curves present slight difficulty.

Belt conveyors are frequently used for bringing ore into a mill from a hoist pocket, train-dump pocket, or coarse-crushing plant. They may also serve for hand-picking of the ore in transit, and to elevate to the top of the mill. For details of construction, see Sec. 18, Art. 6. With a 36-in. belt, and material of 100 lb. per cu. ft., 1 ton-mi. of transport on level ground requires 1.25 hp.-hr. of work; in general, for lighter materials and narrower belts, 1 hp.-hr. moves 1 ton 1 mi. on a level haul.

A downhill belt conveyor was installed by the MOUNTAIN COPPER CO. to convey the pyrite output of its Hornet mine, crushed to 4-in. maximum size, a vertical distance of 189 ft. from mine level to railroad track in a horisontal distance of 300 ft. The two terminal bins and an intermediate tower bin supplied all but 60 ft. of the vertical drop, which was divided between two conveyors. The upper, 24 in. wide, sloped 9° 40′ and traveled 125 ft. per min., governed by a small motor and two sets of spur gears; the lower, 20 in. wide, sloped 14° 40′, traveled 150 ft. per min., and was connected to the same shaft

that drove a trommel (*119 P 638*). In a similar manner, at the ENGELS mill (*185 P 185*) flotation concentrate (70 tons, dry, per day) carrying 10 to 15% water was lowered a vertical distance of 100 ft. on a 12-in. belt sloping 34°.

For further data on practice, see Sec. 2, various mills; and Sec. 18, Art. 6.

Mono-rail system, well developed in Europe, has only one noteworthy installation in the United States, *viz.:* near Searles Lake, Calif. (*116 J 100*).

The total length is 28 mi. of which 8 mi. is level but the remainder traverses extremely rugged country, requiring sharp curves and grades of 8 to 10%. The wooden framework supporting the rail is seldom more than 3 ft. high. Estimated cost was $8,000 per mi. A specially fitted Fordson tractor makes 10–15 mi. per hr. on the level, and 8 mi. per hr. upgrade. Cost of transportation was estimated at less than $1 per ton.

Horse-drawn wagon haulage. For general data on loads, speeds, grades, tractive resistance, road surfaces, etc., see *Peele.*

At Philipsburg, Mont., the ALGONQUIN mine formerly shipped manganese ore 2.7 mi. to the mill by 6- or 8-horse wagon and trailer carrying together 5 to 6 tons. The team made two round trips per day. In the DOLORES district, Colo., picked vanadium ore was hauled on contract by 4- or 6-horse wagon and trailer 50 to 90 mi. to Placerville. The average load was 1,000 to 4,000 lb. per horse, depending on grades and road condition. Speed on rough roads, 16 mi. per day; on good roads, 22 to 25 mi. per day. During the early development of the MAGMA mine (1914) the rate for wagon haulage of supplies, 32 mi. upgrade from Webster, was $10 per ton; when the wagons hauled both ways the rate was $8 up, $5 down.

Motor trucks have largely supplanted horse-drawn wagons where the roads are suitable; tractors and trailers can be used where horse-drawn loads cannot get through.

Table 4 (*IC 6898*) gives low and high average costs of trucking. Differences are due to amount of material handled, condition of roads, grades, method of loading and unloading, cost of supplies, and condition of equipment.

Table 4. Average costs of trucking, cents per ton-mile

Distance hauled, miles	2	5	10	20	50	100
Low average	18	11	8	6	5	4 1/2
High average	....	32	23	16	10	7 1/2

With the rapid improvement in roads, the use of gasoline and Diesel trucks is increasing. Trucks of 30-ton load capacity and larger are coming into use.

The COLUMBIA STEEL CO. in Utah, using 30-ton trucks, loaded by steam shovel, is hauling iron ore one mile to the crushing plant. At Tooele, Utah, 20-ton trucks haul lime sand for smelter flux a distance of about 15 mi. At MORENCI (*23 M Mt 251*) 22 1/2-cyd. trucks were used for the preliminary work in the open pit. They were originally equipped with gasoline engines, but these were replaced by Diesels, which cost less for maintenance and operation. Average operating cost per truck per 8-hr. shift was $35, including labor (one driver), lubricant, fuel, and all maintenance. Tire mileage was 12,000.

Tractors and trailers move at relatively slow speed, but can haul heavy loads over roads rough enough to be damaging to motor trucks.

At Philipsburg, Mont., the ALGONQUIN mine shipped manganese ore 2.7 mi. to the mill in trains of five 6-ton trailers drawn by a 75-hp. Holt caterpillar tractor, making three trips a day, at a cost of 72¢ per ton, or 27¢ per ton-mi. TREADWELL-YUKON CO., Mayo district, Yukon Terr., employed a 10-ton Holt caterpillar tractor to haul 4 sleds loaded with 33 to 54 tons of sacked ore a distance of 42 mi. down very rough mountain road, with frequent grades that required splitting the load. During 5 months (Nov. 1922 to Mar. 1923) the train made 54 round trips (4,636 mi.) delivering 2,501 tons of ore (46 tons per trip). The temperature ranged from +10° to −50° F. and snow was 4 ft. deep on the level but there was no interruption to tractor service. The loaded trip required 20 to 24 hr., the return trip with a light load of supplies, 16 to 20 hr. Gasoline consumption was 2 gal. per mi. loaded; 1 gal. per mi. returning. Total cost (fuel, oil, and wages, including return trips) was $2.60 per ton, or 6.2¢ per ore-ton-mi.

Gasoline locomotives are built up to 15 tons in weight, with drawbar pulls of 20% of their weight and geared to speeds of 6 to 12 mi. per hr. The makers estimate gasoline consumption at 0.1 gal. (0.6 lb.) per hp.-hr.; tests have indicated 0.73 to 1.2 lb. of gasoline per brake hp.-hr. at full load and full speed, 1.2 to 2.2 lb. at half load and half speed, and higher consumptions for reduced loads.

At numerous bituminous-coal mines and a few metal mines of the United States (*Peele*) with hauls of 1,800 to 8,400 ft., the operating cost ranges from 2.5 to 5¢ per mineral-ton-mi.

At the NEW YORK ZINC CO., Edwards, N. Y. (*W. R. Wade, PC*), a Fate-Root-Heath 25-hp. gasoline locomotive hauled a train of two or three cars, each weighing 3,000 lb. empty and carrying 3 tons of ore, an average distance of 800 ft. down a 0.5% grade at a speed of 15 mi. per hr. Track, 3-ft. gage with 25-lb. rails. The locomotive also hauled waste (about one-fourth of the ore tonnage) an average

distance of 400 ft. In a 9-hr. shift, it averaged 250 tons of ore and waste. Gasoline consumed, 1 gal. per hr.; estimated operating expense (excluding wages), $2 per shift; repairs, not over 0.1¢ per ton. Allowing wages of $4 a day for one engineer, the estimated total direct cost for haulage only was 17.7¢ per ton-mi. The first cost of the locomotive was $1,815. At the TROJAN mine, S. D., a Milwaukee gasoline locomotive hauled trains of eight 1.5-ton cars a distance of 2,000 ft. to the mill at cost of 6¢ per ton (1922) or 15.8¢ per ton-mi.

Diesel locomotives, owing to their higher thermal efficiency and cheap fuel, have almost entirely replaced gasoline-driven locomotives. They are built in all sizes from 3′ to 30-ton upward, and are motored from 6–7 hp. per ton on the smaller to 7–8 on the larger sizes. Fuel consumption ranges from 0.4 to 0.6 lb. per b.hp.-hr., as against gasoline consumption of 0.8 to 0.9 lb. per b.hp.-hr.

Diesel locomotives have been used in coal mines and other confined and badly ventilated places in Europe since about 1933, by equipping them with exhaust-washing or conditioning apparatus. About 1,000 such machines are in use in France and Germany alone at this time (1938). A concentration not exceeding 0.1% CO is guaranteed continuously, and where firedamp (methane) is encountered, stainless-steel flashproof grills (Davy-lamp principle) are fitted on the exhaust to guard against explosion. Exhaust gases, either before or after passing the grills, are passed through a cooling tank containing water. Some makers recommend adding an oil solvent to purify the exhaust by retaining the carbon particles. Spent cooling solution is changed at intervals of 8 to 12 hr.

Table 5. Comparison of Diesel and other rail-haulage costs in France

[After Rice and Harris, *RI 3320*, quoting *Georges Scherrer*]

	Electric trolley	Storage battery	Diesel	Rope haulage
	¢	¢	¢	¢
Wages and fixed charges	1.056	2.046	1.056	2.178
Electric energy, fuel, etc.	0.924	1.122	0.792	0.858
Total costs	1.980	3.168	1.848	3.036
Total costs per ton-mile	2.88	4.61	2.70	4.45
Cost for an installation capable of hauling 1,500 ton-km. per shift	$19,800	$49,500	$16,500	$19,800

Narrow-gage steam locomotives are found in many districts, hauling for long distances, where rough topography makes construction of standard-gage roadbed unjustifiably expensive. A simple steam locomotive consumes 4.5 to 8 lb. of coal or 2 to 5 lb. of fuel oil, and 27 to 32 lb. of water per hp.-hr. while in motion; the total fuel consumption, covering delays, may be 50 to 100% greater.

At BAWDWIN MINES, Burma, the total length of narrow-gage line is 46 mi. with grades of 4 to 5.5% in places and numerous sharp curves. Gage is 2 ft. The principal traffic is downgrade, 33 mi. at a cost of 7¢ per ton-mi.

Storage-battery locomotives might be advantageous to haul trains of ore cars directly to the mill from a mine in which battery locomotives for any reason are preferred underground. Gages range from 18 to 44 in. In general, battery locomotives are equipped with motors aggregating 4 hp. per ton of total weight; the range is from 2.5 to 8 tons. On clean rails they exert a drawbar pull of one-fourth their weight when moving at 3 1/2 mi. per hr.; they have been operated effectively on grades up to 10%, but in general they give best results on moderate grades.

In the BUTTE & SUPERIOR mine, in narrow, tortuous drifts with irregular grades (*128 P 751*), a 3 1/2-ton locomotive, exerting a drawbar pull of 1,500 lb., at 4 mi. per hr., hauled a train of 10 roller-bearing cars, each of 2,250 lb. gross weight. During 1919, nine locomotives hauled 737,787 cars of ore and waste an average distance of 790 ft., at cost per car-trip of: power, 0.41¢; locomotive repairs, 3.21¢; motorman and helper, 6.90¢; total, 10.52¢.

Exhaustive tests at COPPER QUEEN showed that battery locomotives required 1.6 kw.-hr. at the powerhouse per ore-ton-mi. In the UNITED VERDE mine (*66 A 177*) Baldwin-Westinghouse 3-ton locomotives gave a drawbar pull of 800 lb. at 3 1/2 mi. per hr. Batteries (80 Edison A–4 cells) were recharged after each shift, with 250-volt current. Hauling 215 tons ore per shift, a distance of 200 ft. up 0.4% grade, the cost in cents per ton was (1918): Labor (1 motorman and 2 loaders), 8.4; power (25 kw.-hr. per shift), 0.4; depreciation of motor, 0.6; repairs and inspection, 0.2; total, 9.6¢.

Trolley locomotives, in addition to hauling trains of ore cars direct from mine workings to the mill, where this is possible, are often installed independently for surface haulage from

a loading pocket at the mine, as at ALASKA-GASTINEAU, BRITANNIA, HEDLEY, MELONES, TONOPAH EXTENSION, BUNKER HILL & SULLIVAN, and many other mines. For this purpose, more powerful and wider-gage locomotives are applicable than for mine haulage, and higher voltages are permissible. Trolley locomotives are usually equipped with motors aggregating 10 hp. per ton of total weight (which ranges from 3 to 30 tons), and give a drawbar pull, with steel-tired wheels, estimated at 25% of the total weight of the locomotive.

At UNITED VERDE mine, Jerome, Ariz. (*66 A 177*), in the Hopewell main-haulage tunnel, 25-ton Baldwin-Westinghouse locomotives were used, equipped with two 75-hp. 250-volt, direct-current motors and exerting a drawbar pull of 12,500 lb. at 7.1 mi. per hr.; total haul, 8,900 ft. Bottom-dump, standard-gage cars of 220-cu. ft. nominal capacity were loaded from chutes with 280 cu. ft. or 20 tons of heavy sulphide ore. The trains were 14 cars, making 425 tons gross per locomotive. The cost in cents per ton for 1918, on 861,250 dry tons, was: Labor, including loading and dumping, 5.4; supplies, 0.1; power, 0.5; repairs, 3.5; total, 9.5, or 5.6¢ per ore-ton-mi. At ALASKA-JUNEAU (*120 P 251*) the mine output was hauled 2 mi. down a 0.5% grade, 30-in. gage, double-track, 32-car trains; each car weighed 3 tons empty and carried 10 tons of ore; total weight of train, 96 tons empty, 416 tons loaded. The locomotive was in two sections, of 9 tons each, having two direct-current Westinghouse No. 905 motors in each unit and was small enough to pass through a rotary car dump discharging four cars at a time. The front section of the locomotive could be quickly detached and used for switching. Power for operation was obtained from two 300-kw. rotary converters, each with an individual 6-phase transformer.

The BUTTE, ANACONDA & PACIFIC RY. transports ANACONDA ore (over 5,000,000 tons per year) from mines on Butte Hill to the Washoe concentrator at Anaconda; total haul, 32 mi. (*Elec. Ry. Jour.*, Mar. 14, 1914). The General Electric locomotives used weigh 80 tons, have 1,050-hp. continuous rating, and exert a tractive force of 25,000 lb. at 15 mi. per hr. Trolley wire is No. 0000 and carries 2,400 volts direct-current. The cars weigh 18 tons and carry 50–53 tons of ore; two locomotives per train. Operating data are given in Table 6.

Table 6. Haulage of Anaconda ore by Butte, Anaconda & Pacific Ry.

	On Butte Hill, mines to Rocker	Main line, Rocker to E. Anaconda	On Smelter Hill, E. Anaconda to concentrator
Distance, miles	4.6	20.1	7.2
Average grade, loaded	−2.5%	−0.3%	+1.1%
Cars in train	30	65	20
Gross train load, tons	2,000	4,620	1,400
Speed, miles per hour	12	16–21	16

This road, formerly steam-operated, was electrified during 1912–13, at a cost of $1,201,000; the first year's electric operation indicated a saving of 36% in direct costs, as shown in Table 7. In the item of power alone, the saving was 48% compared with steam operation. The saving in trainmen's wages was due principally to the higher speed and greater regularity in train movement.

For other data on performance and operating costs of trolley locomotives, see *Peele*.

Table 7. Comparative costs of steam and electric haulage at Anaconda

	1913, steam	1914, electric
Locomotive operation only (fuel or power, oil, crew, maintenance, etc.)	$594,921	$357,339
Trainmen's wages	147,632	116,486
Total direct operation	$742,553	$473,825
Ton-miles hauled, net	158,917,720	172,855,856
Cents per ore-ton-mile	0.467	0.274

Standard-gage steam locomotives are employed by the largest mines, not only for long hauls of ore but also for disposal of waste. In many cases, the tracks form part of the mine equipment; in others, the roads serve as public carriers operated by organizations subsidiary to the mining companies; while in others, the ore traffic runs partly or entirely over independent roads, sometimes under a trackage license. A few notable examples of relatively long hauls over standard-gage railroads were given in Table 3. Tables 8 and 9 give rate data useful for preliminary estimates; published tariffs should be consulted for final estimates.

Moisture in the ore or concentrate must be included in figuring freight. For freight purposes, the value of ore is the net amount per ton paid by the smelter to the shipper less the freight per ton, not deducting the smelter treatment charge.

Freight rates for metallic products such as slab zinc, lead bullion and pig lead, copper bullion and refined copper, Inter-Mountain States to Atlantic seaboard, may be estimated at 0.5¢ per ton-mi.; to Pacific seaboard, 0.8¢ per ton-mi.

Table 8. Freight rates on ores and concentrates charged by certain common-carrier railways, September 1923 (116 *J* 480)

From	To	Miles	Road	Value of material, dollars per ton				
				20	30	50	70–75	100
				Cents per ton-mile				
Creede	Durango	270	D. & R. G. *a*	1.30	1.50	1.76	2.13	2.63
Ouray	Durango	173	D. & R. G.; R. G. So.	2.78	2.93	3.42	3.65	4.46
Silverton	Durango	46	D. & R. G.	3.10	.....	.....	5.64	6.20
Park City	Murray	37	D. & R. G.	3.44	4.13	5.51	.....	6.88
Eureka	Midvale	83	D. & R. G.	1.51	1.81	2.41	3.01	3.92
Ray Junction	Hayden	15	Ariz. Eastern	2.74	3.42	6.16	6.84	7.53
Tyrone	Douglas	204	R. P. & S. W.	0.93	1.08	1.37	1.67	1.86
Tyrone	El Paso	173	E. P. & S. W.	1.10	1.27	1.62	1.96	2.20
Burke-Wallace	E. Helena	260	Nor. Pacific	.....	1.15	1.35	1.54	1.83
Tonopah	Midvale	740	Via Ogden	0.69	0.78	0.97	1.16	1.45
Roesland	Tadanac	12	C. P. R.	8.33	12.5	13.33	14.16	14.16

a Narrow gage.

Ocean rates, New York to Atlantic European ports, $6.00 to $7.00 per gross ton; Gulf ports to Atlantic European ports, $4.50 to $5.00 per gross ton; Pacific ports to China (Hong-Kong), $5.00 per short ton; Pacific ports to Japan (Kobe), $4.00 per short ton.

COPPER QUEEN hauled waste rock from Sacramento Hill downgrade to a dump 2 mi. away (*68 A 251*). Of 15 standard-gage Porter locomotives used (4 driving wheels and saddle tanks), three weighed 53 tons each and exerted a tractive force of 20,436 lb.; the other 12, with superheaters, weighed 54.5 tons each and exerted 23,063 lb. pull; gage pressure, 175 lb. in both cases. Cars were all-steel with compressed-air dump, had capacities of 20 and 25 cu. yd., and weighed, respectively, 55,400 and 60,700 lb. The average performance per locomotive-shift was 450 cu. yd. (solid; estimated at 1,035 tons) at a cost of 17.7¢ per cu. yd., or 3.8¢ per ton-mi.

Estimation of size of simple locomotives for a given service depends on providing an excess of tractive effort over the frictional resistance of train and locomotive. Maximum locomotive drawbar pull with steel-tired locomotive wheels ranges from 25% of locomotive weight on dry track to half that figure on wet track. Frictional resistance of train and locomotive in motion ranges from 10% of their combined gross weight with roller- or ball-bearing axles to 20% with plain axles. Starting resistance on level track, particularly after standing some time in cold weather, may be double these figures, but under favorable conditions after a momentary stop may fall to 3% above rolling resistance. Starting resistance is less with spring drawbars, which permit the load to be picked up gradually. Cars weigh from 40 to 50 lb. per cu. ft. of loadable ore capacity; a rough figure for estimate is one-third of gross train load.

Table 9. Average freight rates on ores, Inter-Mountain States, 1938

Miles	Smelter value of ore in dollars per ton							
	10	20	30	40	50	60	80	100
50	0.80	0.95	1.10	1.25	1.40	1.50	1.75	2.00
100	1.25	1.50	1.75	2.00	2.25	2.50	3.00	3.60
200	2.00	2.30	2.65	3.00	3.40	3.90	4.70	5.50
400	3.60	4.10	4.60	5.10	5.60	6.10	7.30	8.80
800	6.00	6.70	7.40	8.10	8.80	9.50	11.50	13.50

Reversible aerial tramways are designed for distances up to 2,000 ft., and bucket loads of 400 to 2,500 lb. Intermediate supports may be used, but the speed is then limited to 1,000 ft. per min.; on an unsupported span, 1,500 ft. per min. is safe. There may be one or two carrier cables; in the latter case the economical limit is approximately 20,000 ft.-tons per hr.; for a single cable the capacity is less than 10,000 ft.-tons per hr. (*Peele*).

At SISCOE GOLD MINES (*57 CMJ 498*), a shuttle tramway transports 400 tons of ore per day from crushing plant to mill (800 ft.). The equipment consists of a bucket of 2.05-ton capacity fully loaded, two 1 3/8-in. track cables, one 1/2-in. endless haulage cable, central supporting tower, and an anchor tower. The system is operated by a 15-hp. motor through a herringbone-gear speed reducer. Average speed of bucket is 715 ft. per min. Average total time of trip, including loading, tramming to mill bins, unloading, and return, is 3 min. The full efficient capacity is 41 tons per hr. Average life of track cables is 3 1/2 yr., haulage cable lasts 1 yr., average tramming time is 315 hr. per mo. Cables are greased monthly. The cost of crushing, screening, conveying, and aerial tramming was 12.7¢ per ton (January to March 1936).

At the OTTAWA mill, near Slocan, B. C., a two-bucket reversible gravity tram 200 ft. long, with rated capacity of 10 tons per hr., cost $8,000 in 1921, including the erection of terminals and clearing of way. Rugged country and local scarcity of timber added to the expense. Cost of tramming was 10¢ per ton.

Continuous aerial tramways often afford the only practicable means of conveying ore from the mine or concentrates from the mill in steep or rough districts. The economical minimum limit of capacify is 10 tons per hr.; the maximum limit ranges from 100 tons per hr. in general to 200 tons under exceptionally favorable conditions. They are not usually warranted for distances of less than 1,000 ft. and the maximum length of a unit is about 4 mi.; two or more units can be erected in tandem, with transfer of buckets for greater

Table 10. Performance of continuous double-rope tramways

	Tomboy, Telluride, Colo.	Utah Cons., Toole, Utah	Walker, Plumas Co., Calif.	Magma, Superior, Ariz.	Nipissing, Cobalt, Ont.
Type	Bleichert	Bleichert	Leschen	Bleichert	Bleichert
Length, miles	1	4	8.6	0.5	0.72
Elevation of discharging with respect to loading terminal, ft.	−2,500	−1,260	−2,130 *a*	−250	+100
Driven by	35-hp. motor	Motor	Motor	10-hp. motor as governor	Motor
Power required, hp.	None; generates	30	12–18, after starting	None; develops 2.5 hp.	15
Materials transported	*b*	Ore	Flot. con. *c*	Ore	Ore
Speed, feet per minute	280	600	475	440	690
Rated capacity per hour, tons	20	100	9–10	37	30
Actual delivery, tons	75 in 7 hr.	1,100 in 12 hr.	90–105 in 10 hr.	600 in 16 hr.	180 in 9 hr.
Cost of installation	$43,600 *d*	$190,000 *e*	$175,000 *e*	$8,132 *e*	$18,300
Operating cost, per ton	$0.56	$0.28	$1.00 *f*	$0.125	$0.093
Operating cost, per ton-mile	0.56	0.07	0.116	0.25	0.133
Built	1912	1910	1919	1914	1912

a Goes over a high point 1,020 ft. above loading terminal.
b Concentrate down; coal and all other supplies up.
c 10% water.
d Including bins.
e Excluding bins.
f During winter, with heavy snow, men and all supplies are carried by this tram, necessitating extra guards.

distances. Anchor and tension stations must be situated at intervals of 3,000 to 5,000 ft. Loads per bucket range between 500 and 2,000 lb., and three buckets per min. is about as rapidly as they can be handled at terminals; two buckets per min. is nearer the average. (For additional data see *Peele.*) Data on specific operations are given in Table 10.

Cost of aerial tramways varies greatly in different sections of the United States. Tramways having capacities of 35 to 50 tons per hr. have been built for as little as $4.25 per ft. This cost can be approached only where it is possible to get an abundance of skilled labor at a reasonable rate, and where it is possible to deliver all construction material by truck or some other low-cost method. The other extreme is probably represented in southwestern Colorado, where there is a scarcity of almost

Table 11. Breakdown of tramway material costs

Capacity, tons per hour	25	30	40	50	50	100	100
Cable, loaded side, diam., in.	1	1 1/8	1 1/8	1 1/8	1 1/4	1 1/4	1 3/8
Cable, empty side, diam., in.	7/8	7/8	7/8	7/8	7/8	7/8	7/8
Traction rope, diam., in.	1/2	1/2	1/2	1/2	5/8	5/8	5/8
Capacity, buckets, cu. ft.	5	6	6	6	12	12	15
Spacing of carriers, ft.	300	300	225	180	360	180	225
Time interval, sec.	36	36	27	21.6	43.2	21.6	27
No. of carriers per mi.	37	37	48	59	32	60	49
No. of supports	20	22	22	22	22	22	22
Wgt. in lb. per ft.	10.17	11.27	11.91	12.56	13.48	16.25	17.03
Cost, dollars per ft.	1.44	1.55	1.72	1.89	1.84	2.43	2.40
Terminal wgt., lb.	26,400	32,700	32,700	32,700	38,900	38,900	38,900
Terminal cost, dollars	2,894	3,540	3,540	3,540	4,154	4,154	6,087
Tension station, wgt., lb.	7,300	7,800	7,800	7,800	9,100	9,100	10,100
Tension station cost, dollars	733	766	766	766	900	900	1,005
No. of men required to operate	3	3	4	4	4	7	7

everything required and where much of the material for construction purposes (even water for concrete) must be delivered by pack animals. Here a dependable tram will cost $10 per ft. or more. A lighter and less substantial tram might be built for $8 per ft., but such a tram could not be depended on to operate successfully during the severe storms that prevail in winter. Other things being equal, a short tram costs more per foot than a long one, since terminals represent a large percentage of total cost (*IC 6948*).

Table 11 gives costs of equipment for tramways of standard American make for capacities of 25 to 100 tons per hr. The data do not include the cost of supporting structures or installation costs. For lines requiring braking and control equipment, $175 to $850 must be added.

Construction and installation costs will range from equality with the equipment cost where topography is favorable and labor supply and material plentiful to two or three times the equipment costs under unfavorable conditions.

At HOLLINGER, 2,500 tons of sand and gravel for mine backfill is handled per day over a mono-cable aerial tramway 3.6 mi. long (*56 CMJ 418*). The tramway consists of a single endless rope passing around a terminal sheave at each end and kept in continuous motion by a 100-hp. motor through belt, pulley, and reduction gear. There is 100 ft. difference in elevation between loading and discharging terminals. The cable is driven at the mine end by an open-groove friction sheave equipped with a sectional lining of 1-in. cast copper blocks (which lasted 40 times as long as the original lining of leather and brake-band material). Tension is maintained at 26,000 lb. by a weight at the lower terminal. There are 69 steel towers averaging about 28 ft. in height. The rope carries 227 @ 19-cu. ft. buckets having a nominal capacity of 1,900 lb. each. At a rope speed of 527 ft. per min. a bucket makes a round trip every 70 min. Maximum capacity is 190 tons per hr. Average life of cables is about 1,200,000 tons. Cable is 1 5/16 in. diameter, Lang-lay, 6 strands of 15 wires each, and weighs 2.75 lb. per ft.; breaking strength, 58 tons; wire tensile strength, 198,000 lb. per sq. in. Idler sheaves are mounted on rocker arms on the towers. Sheaves are provided with Alemite lubrication while the cables are oiled automatically by a drip can. Cost of operation (1934) was 2.10¢ per ton of sand delivered; cable maintenance and replacement was 1.60¢ additional, loading and unloading buckets amounted to 2.79¢; total, 6.49¢ per ton.

Table 12 presents data concerning haulage performances, compiled from a variety of sources.

Table 12. Summary of haulage practices

Method	Weight of haulage unit, lb. *a*	Tractive effort, lb. *b*	Speed, mi. per hr.	Equalized grades, % *c*	Max. capacity, ton-mi. per 8 hr.	Cost, ¢ per ton-mi.
Packing:						
By burro	400	200 *d*	<1.5	.....	10 *e*	100–200
By mule	1,000	300 *d*	<2	.....	20 *e*	75–150
Wagon or sled, 2 horses	2,000	500	2–3	.....	30–60	50–100
Tramming: *f*						
Man	150	20–50	1.5	0.5	5	50–100
Animal	1,000	100–300	2	0.5	25–50	20–60
Locomotive:						
Gasoline *f*	20,000	5,000	4	0.5	2,000	1–5
Diesel *f*	60,000	15,000	4	0.3–0.5	10,000	0.5–0.3
Storage-battery *f*	30,000	7,500	3	0.5	1,200	2–20
Trolley *f*	50,000	12,500	6	0.5	4,000	3–15 *g*
Steam, narrow-gage *h*	100,000	20,000	8–12	0.25	10,000	2–4 *i*
Steam, std.-gage *h*	500,000	100,000	10–15	0.125	75,000	1–2 *j*
Tramway:						
Aerial *k*	2,000	.....	4–7	.....	5,000	5–15
Jig-back *l*	2,500	.....	5–15	.....	50	15–30
Gravity plane *m*	10,000	.....	4–10	.....	500	3–10
Engine plane *m*	20,000	.....	4–10	.....	500	3–10
Truck:						
Gasoline	10,000	3,000	20	.....	200	5–15
Diesel	50,000	15,000	10	.....	400	3–10
Belt conveyor *n*	.....	.....	500 *o*	.....	5,000	1–16

a Men and animals, aver. weight; locomotives, weight on drivers; tramways, bucket load; planes, rope-pull; trucks, loaded weights.

b Tractive effort, 20–25% of weight of power element; drawbar pull, 99% of tractive effort.

c Grade at which drawbar pull is the same in both directions, assuming loaded run downgrade and weight of empties equal one-third loaded train.

d Load carried.

e One man and 6 animals.

f Based on roller bearings; car weight, 50% of ore.

g At 0.04 kw.-hr. per ton-mi.

h M.C.B. axle boxes.

i At 0.02 kw.-hr. per ton-mi.

j At 0.01 kw.-hr. per ton-mi.

k Limit length, 4 mi.

l Limit length, 0.4 mi.

m Limit: 1 mi., large cars.

n Limit: 0.33 mi. c. to c. of head and tail pulleys

o Ft. per min.

Table 13. Storage-bin capacities at representative mills

Mill	Daily capacity, tons	Storage capacity				Ore received via
		As mined	Partly crushed	Total, tons	Total, days	
Alaska-Gastineau	7,000	6,600	5,100	11,700	1.7	Standard-gage railroad, 3.5 mi.
Anaconda, copper department	15,300	9,600	.....	9,600	15 hr.	Standard-gage electric railroad, 32 mi.
Anaconda, zinc department	2,000	800	.....	800	10 hr.	Standard-gage electric railroad, 32 mi.
Belmont-Surf Inlet	400	.....	630	630	1.6	Conveyor; near shaft.
Britannia *a*	3,000	2,500	3,600	6,100	2.0	Electric mine tramming.
Bunker Hill & Sullivan, West No. 2	1,500	1,400	1,700	3,100	2.0	Electric mine tramming.
Butte and Superior	1,750	1,800	2,750	4,550	2.7	Mine strip.
Calumet & Hecla, "Conglomerate"	11,000	450	.....	450	1 hr.	Standard-gage railroad, 5 mi.
Cananea Consolidated	1,000	2,000	2,400	4,400	4.4	Narrow-gage railroad, maximum 3 mi.
Chino	14,000	18,000	14,000	32,000	2.4	Standard-gage railroad, 10 mi.
Copper Queen	4,000	500	10,000	10,500	2.6	Standard-gage railroad, 3–4 mi.
Copper Range	2,100	.....	500	500	6 hr.	Standard-gage railroad, 14 mi.
Engels	1,200	850	3,400	4,250	3.5	Half from skip; half by aerial tram.
Federal No. 4, Flat River, Mo.	3,000	1,500	2,500	4,000	1.3	Conveyor; near shaft.
Homestake, South	1,800	*a*	7,200	7,200	4.0	Mine electric tram.
Inspiration	18,000	2,500	28,500 *b*	31,000	1.7	Standard-gage railroad, 1.5 mi.
Kimberley	3,000	*a*	3,500	3,500	1.2	Standard-gage railroad, 4 mi.
Liberty Bell	500	.....	.....	1,500	3.0	Aerial tram, 7,000 ft.
McIntyre-Porcupine	525	.....	.....	1,100	2.0	Aerial tram.
Melones	600	.....	.....	2,350	4.0	Electric tram, 1 mi.
Moctezuma	2,500	800	4,000	4,800	1.9	Narrow-gage railroad, 5 mi.
Mountain Copper	550	*a*	800	800	1.5	Narrow-gage railroad, 5 mi.
New Cornelia	5,000	5,000	10,000	15,000	3.0	Standard-gage railroad, 1 mi.
Old Dominion	1,000	.....	2,400	2,400	2.4	Standard-gage railroad.
Ray Consolidated	10,000	.....	.....	26,000	2.6	Standard-gage railroad, 25 mi.
St. Joseph Lead, Bonne Terre	2,600	.....	115	115	1 hr.	Mine skip.
Sta. Barbara	500	500	500	1,000	2.0	Mine tram.
Silver King Coalition	300	2,700	2,200	4,900	16.0	Electric mine train, short distance.
Sunnyside	550	.....	.....	4,200	8.4	Aerial tram, 3 mi.
Tennessee Copper Co.	600	300	400	700	1.2	Standard-gage railroad, 2–3 mi.
Timber Butte	700	600	4,500	5,100	7.0	Standard-gage railroad.
Tonopah-Belmont	500	.....	.....	1,500	3.0	Automatic tram, 300 ft.
Tonopah Extension	350	.....	.....	500	1.5	Electric tram, 4,000 ft.
United Comstock	2,000	1,600	3,200	4,800	2.4	Electric mine train, short distance.
Utah Copper (two mills)	40,000	*c*	27,840	27,840	0.7	Standard-gage railroad, 18 mi.

a Large reserve storage in mine.
b "Available" storage only, including 2,500 tons in 3 ore trains; actual cubic capacity of storage bins for crushed ore is 50,000 tons.
c Utah Copper Co. has no storage bins for uncrushed ore, but loaded cars standing or in transit contain 26,000 tons.

Storage for ore must be provided to insure uniform rates of feed to crushing and grinding units. The necessary bin capacity depends upon the degree of uniformity of the stream of ore from the mine chutes, the working periods of mine and mill, climatic conditions, requirements for mixing ores, and other less important considerations (see Sec. 18, Art. 1).

Run-of-mine ore is difficult to handle in cars or skips and from bins. To lessen such handling, coarse crushers are sometimes installed underground. The cost of such crushing is slightly higher than at the surface, but it reduces labor at loading pockets and wear in chutes and skips, and it permits coarser breaking in stopes.

When crude ore is supplied at a uniform rate, as by mine skip from an underground storage pocket, a pocket to hold one or two skip loads ahead of the crusher is sufficient. Other mine conditions may require crude-ore bin capacity of 24-hr. supply or more. Usual practice is to operate the coarse-crushing plant for 8 or 16 hr. per day only, to allow at least one shift per day for uninterrupted entry of supplies to the mine, and to permit normal crushing-plant repair without interference with movement of ore by the mine. This practice necessitates storage between the crushers and the 24-hr. operations.

Where ore comes to the coarse-crushing plant by train, as at UTAH COPPER and other mines, the cars provide coarse-ore storage.

The secondary, or crushed-ore, storage must be sufficient for continuous 24-hr. operation of grinding and concentration units. The capacity of crushed-ore bins will depend upon the operation of the coarse-crushing plant, the method of distribution of the crushed ore in these bins, and any mixing requirements. Average crushed-ore bin capacity is about 24-hr. supply; it runs as high as 72 hr. in some cases.

Table 13 gives data on some well-known mills.

2. WATER SUPPLY

Usual sources of plant supply are: nearby streams, lakes, or irrigating ditches, wells or tunnels tapping water-bearing strata, seepage from tailing piles, or the mine itself.

Water requirements depend, of course, on the kind and variety of demand. In isolated camps provision must be made not only for the mill supply but also for the domestic supply, fire protection, the mine, and possibly a smelter and power plant. Of these demands, that by the mill itself predominates as to quantity, while the power plant, and, even more, the domestic demand set relatively high standards as to quality.

Mill requirements are so large that adequate supply often becomes an important engineering problem; in many cases it has been the deciding factor in the selection of a millsite. Where railroad connections permit cheap haulage, it has frequently proved economical to bring crude ore many miles to a convenient source of water instead of pumping the required amount of water to a mill in the neighborhood of the mine. Even with an abundant supply of water in proximity to the mill, if the water must be lifted a considerable height to mill storage, it becomes an important factor in mill design and location because of the large ratio of water to ore (2 to 20 : 1) in mill pulps. In flotation mills the chemical composition and uniform character of the water supply are of prime importance.

The nature of the process and of the equipment are the primary determinants of the quantity of mill water required. Washers require the most; then, in decreasing order, jigs and tables, flotation, and hydrometallurgical processes. The amount of new water required depends upon the method employed, if any, for recovering clarified water from mill products. Water recovery is, naturally, most common in districts where water is scarce; also at mills where soluble reagents have value; but the desirability of clarifying and recovering water at any convenient stage in the milling system, at an elevation above that of final discharge, always deserves investigation. Data on water requirements of representative mills are given in Table 14.

Domestic consumption in American cities averages about 100 gal. per day per capita; the range is from 30 to 200 gal., depending on supply, percentage metered, and nature of industries. Maximum daily consumption may exceed the mean 40 to 50%; maximum hourly consumption is determined largely by fire service and may be three times the mean daily average. In dry or arid regions consumption is, of course, fixed by the amount of water available, and may be held well below the above 30-gal. minimum. Mine requirements are comparatively negligible in quantity. Smelter and power-plant requirements are highly specific.

Supply. Rainfall and evaporation vary with the locality and differ greatly for the same locality from year to year. U. S. Weather Bureau records give the following values of mean annual rainfall over a period of nearly 30 yr: Vicksburg, 53.8; New York, 43.7; Chicago, 33.4; Omaha, 30.8; Helena, 13.3; Yuma, 2.7.

Table 15 shows the necessity of having records extending over a period of years.

Table 14. Water supply at representative plants

Plant	Method of treatment	Tons ore per 24 hr.	Source of water	Distance, source to mill, miles	Tons water in circuit per ton of ore	Water recovered, %	New water, tons per 24 hr.	Lift, ft.
Alaska-Juneau	Tables	6,600	Sea	0	5.2	0	35,100	275
American Metal	Flotation	650	River	1.25	4.5	10	2,916	.....
Amer. Z. L. & S., Mascot	Jig; flotation	2,000	Creek	0.12	18.7	55	16,740	.....
Arizona Comstock	Jig; flotation	400	Lake	30	3	0	1,215	.....
Bunker Hill & Sullivan	Jig; flotation	1,200	Springs	3.4	3.6	50	2,160	.....
Calumet & Hecla	Jig; flotation	6,800	Lake	0	22.5	0	15,309	.....
Chino	Table; flotation	5,300	Wells, creek	4–5	7.1	80	3,780	.....
Copper Queen	Table; flotation	1,250	.....	.....	6	71	7,425	.....
Dayton	Cyanide	160	Mine	6	6	0	972	.....
Demonstration	Cyanide; flotation	300–400	Mine	0.4	6	0	2,160	.....
Eagle Picher, Ruby	Flotation	400	River	15	2	95	40	.....
Federal M. and S.	Flotation	1,250	Creek	0.75	3	0	3,780	.....
Getchell	Cyanide	700	Well	6	2.5	0	1,755	400
Gold Standard	Cyanide	250	River	2	8	0	2,025	.....
Granby Cons.	Cyanide	.....	River	1	4.6	.....	.....	625
Haile	Cyanide	160	Dam	3.75	3.75	0	594	.....
Homestake	Amalg.; cyanide	3,800	Various	.....	7	75	7,020	.....
Inspiration	Flotation	6,350	Wells	2.75	3.6	74	16,850	600 *a*
I. X. L.	Flotation; cyanide	400	River	0	8	0	3,240	.....
Lepanto	Flotation	450	Creek	0.75	3	0	1,350	.....
Magma	Table; flotation	750	Mine	0.5	4	75	756	.....
Matahambre	Flotation	1,200	Mine	0	3	0	3,591	.....
Miami	Flotation	1,800	Wells	3	2.05	72	10,341	850–900
Molybdenum Co.	Flotation	50	River	1.25	5	0	270	.....
Nacozari	Flotation	2,500	.....	.....	5	56	5,535	.....
Nevada Cons.	Flotation	8,900	Springs	.....	.....	.....	.....	480
			Wells	1.75	3	.....	29,700	310
Nevada-Mass.	Table; flotation	250	Well	4.5	8	50	570	.....
New Cornelia	Flotation	.....	600-ft. shaft	6.7	.....	.....	4,050	1,375
Panda	.....	.....	River	2	.....	.....	40,500	500
Peñoles	Cyanide	50	Well	1	6	60	122	.....
Peru, N. M.	Flotation	460	Well	1.2	2.6	0	1,215	.....
Silver King	Flotation	900	Tunnel	1	3	50	1,350	.....
United Verde	Flotation	1,500	.....	.....	2.9	48	2,295	.....

a Plus 300 to 1,400 ft. well depth.

Table 15. Variation in rainfall for the same locality

Locality	Yearly average	Maximum year	Minimum year	Highest 7 consecutive months	Lowest 5 consecutive months	Mean temperature
Boston	45.3	67.7	27.2	47.9	7.9	49
Croton, N. Y.	49.0	63.7	36.9	46.8	10.8	54
Philadelphia	42.6	61.2	29.7	47.7	8.1	54
Atlanta	49.2	65.0	33.0	52.7	8.1	61
Pittsburgh	35.8	50.6	25.3	38.3	6.8	53
Duluth	29.5	45.3	18.1	38.4	2.9	39
Denver	14.3	23.0	8.5	19.1	1.1	51
Phoenix	7.4	19.7	3.8	13.6	0.0	70

Evaporation depends on the quantity and distribution of rainfall, temperature, barometric pressure, and nature of vegetation. For New Jersey, Vermeule (*U. S. Geol. Surv. of N. J.*, 1894, *vol.* 3, *p.* 76) gives $E = F(15.50 + 0.16R)$ where E = yearly evaporation in in., $F = (0.05T - 1.48)$, T = mean yearly temperature, °F.; R = yearly rainfall, in. In arid regions evaporation may account for the entire rainfall.

Runoff and yield. Runoff from a watershed is the amount of water that reaches streams which drain the shed and is the difference between rainfall and evaporation. YIELD is the collectible portion of rainfall and cannot be computed accurately until the following data are known: (1) catchment area, (2) rainfall, (3) minimum year and a series of years, (4) available storage capacity on streams, losses in

evaporation and percolation, (5) measurement of actual discharge of streams. Runoff in New York and New England averages about 45% of rainfall, but the percentage may vary 100% for the same annual rainfall. Average yield is nearly 1,000,000 gal. per day per sq. mi. Small watersheds give a smaller yield per sq. mi. than large ones. For the Pacific States Gunsky determined that the runoff may be expressed in identical percentages of precipitation expressed in inches, *i.e.*, if rainfall is 25 in., runoff is 25% or 6.25 in.; if rainfall is 10 in., runoff is 10% of 10 or 1 in.

Ground water is that part of precipitation, termed RUN-IN, which soaks into the ground. Sands and gravels permit large run-in, clay is nearly impervious. In Connecticut the run-in is 50% of the rainfall, in New South Wales, 2%. Ground water is a source of supply to wells and springs, and to streams except immediately after precipitation. For the same annual rainfall, the ratio between run-in and runoff is a factor of supreme importance in water-supply problems. A high percentage of run-in makes uniform flow in streams and gives abundant supply to wells; low run-in makes arid regions because most of the rainfall finds its way immediately to the water courses and is lost, unless excessive storage capacity is provided. Desert regions are characterized by water courses that are dry except during the period immediately after rain when the water passes off in a flood.

Wells. The horizon below which soil is saturated is called the WATER TABLE. This horizon fluctuates in height with the amount of rainfall and is, in general, parallel to, and a few feet below, the ground surface. Wells sunk below the level of the water table are a source of supply, the yield depending on the ground water present and ease with which it can flow through the neighboring soil; this depends on the nature of the soil, topography of the country, and geologic features of the rocks. ARTESIAN WELLS are those sunk through the first impervious layer to lower water-bearing strata in which the water is under pressure. FLOW FROM WELLS can be determined only by tests and by records of existing wells in the vicinity. Long records are desirable since flow may decrease rapidly with time.

Pumped wells are usually drilled 8 to 24 in. in diameter and are equipped with turbine pumps; capacities up to 10 sec.-ft. are available. EFFICIENCIES range from 60% for small deep wells to 85% for large shallow wells.

Costs of drilling and casing wells vary according to location and ground. Average costs are given in Table 16.

Table 16. Average cost, drilling and casing wells

Material	Diam. of well, in.	Type of casing	Approx. cost, drilling and casing, per ft.
Gravel envelop			For bad sand conditions, cost varies so much as to make estimate impracticable.
Earth, sand, up to 200 ft	8	Screw	\$2 to \$3 *a*
	12	Screw or single welded	\$2.50 to \$3.50 *a*
	16	Single welded	\$3 to \$5 *b*
	20	Single welded or riveted	\$6 to \$8.50 *b*
Boulders, shale, up to 200 ft	8	Screw	\$2 to \$3 *a*
	12	Screw or single welded	\$3 to \$4 *a*
	16	Single welded	\$5 to \$8 *b*
	20	Welded or double riveted	\$6 to \$10 *b*
Soft rock			Add \$1 per ft. to earth prices.
Hard rock			2 to 5 times soft rock, usually drilled on a per diem basis.

NOTE: Wells under 200 ft. may be classed as shallow, those over 500 ft. as deep.

a Add 50¢ per ft. for each 100 ft. below 200 ft.
b Add \$1 per ft. for each 100 ft. below 200 ft.

Stream flow is the usual source of water supply. Stream-flow records covering several years are necessary for dependable estimates of possible yield of a region. When records for short period only are available, rainfall records for the same period should be compared with the runoff record and with the rainfall record for a dry season. When no stream records are available, monthly rainfall records must be used, making allowance for evaporation, deep seepage, and other possible losses. To determine probable fluctuation in flow, rate of precipitation must be considered and ratio of run-in to runoff estimated from topographic features, soil, and vegetation.

Storage is impounding of water during periods of maximum flow for use during dry periods. The usual method is to build a dam in a narrow valley, or a series of such dams on tributaries wherever natural storage sites occur. The storage necessary to assure any assumed continuous draft is determined by study of stream-flow records.

In Fig. 1 the minimum draft can be raised from line *A–B* to line *C–D* by supplying storage equal to the larger shaded area representing excess of demand over supply. The height of line *C–D* increases with the capacity of the reservoir until it equals the mean annual flow minus evaporation and leakage. EVAPORATION LOSSES from a reservoir are 30 to 100 in. per yr., the high figure applying to arid regions.

Example. If a hydrograph is plotted with a vertical scale of 1 in. = 1,000,000 gal. per day, and horizontal scale of 1 in. = 1 month, each square inch of area will represent 30,000,000 gal. The total storage area × 30,000,000 plus the estimated losses gives the REQUIRED STORAGE CAPACITY.

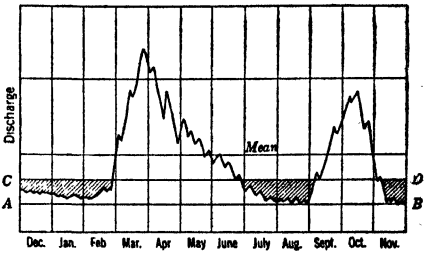

FIG. 1. Hydrograph.

Collection and storage practices at a number of large plants are described below:

The NEVADA CONSOLIDATED COPPER CO., in connection with its central reservoir on Duck Creek (*109 J 857*), laid 54,800 ft. of feeder lines to convey water from four tributary streams and thereby maintain their flow during the winter. Of this total, 45,000 ft. (at three tributaries) consisted of 8- and 12-in. riveted, slip-jointed, light-weight pipe in 20-ft. sections, made in the company's shop at a cost of 7¢ per lb., and asphalted. The lines were laid so as to develop little pressure. Joints were made by warming the larger end to expand it and soften the asphalt; the small end of the next section was then driven in by a ram supported on a light tripod. Three men laid 1,500 to 2,000 ft. of 8-in. pipe in this manner per day. The total cost of these three lines was 62¢ per ft. for the 8-in. and 75¢ per ft. for the 12-in. line. The fourth line, 9,800 ft. of 6-in. pipe designed to carry 150 lb. per sq. in., cost $1.53 per ft.

NEVADA CONSOLIDATED COPPER CO., just below its main gravity storage dam on Duck Creek, drove a tunnel 1,150 ft. long across the valley at the bottom of gravelly soil, 40 ft. deep, resting on hardpan. This intercepted 2 cu. ft. per sec. of the seepage from the reservoir, which was raised by a hydraulic ejector operated by a high-pressure gravity line. McGill Springs, at the Nevada Consolidated smelter, deliver 9 to 12 cu. ft. per sec. This was formerly pumped to mill-supply tanks by two motor-driven centrifugal pumps, each with capacity of 4.9 cu. ft. per sec., at cost of 0.77 to 1.04¢ per ton of water. One triple-expansion steam pump, with maximum capacity of 12 cu. ft. per sec. against 480-ft. head did the work at about half the cost of the electric installation (*109 J 857*). NEW CORNELIA'S water comes from a 2-compartment shaft 600 ft. deep, sunk for the purpose at a point 8 mi. northeast of Ajo. A duplex, double-acting pump, direct-connected to a synchronous motor, delivers 800,000 to 1,000,000 gal. per day through 6.7 mi. of 10-in. iron pipe against a total head (including friction) of 1,375 ft. (*60 A 22*). The 2,000-ton ALLENBY mill of the GRANBY CONSOLIDATED, requiring 4.6 tons of water per ton of ore, is supplied from the Similkameen River, one mile away, by three centrifugal pumps (one in reserve) which have a capacity of 800 gal. per min. each, discharging through 5,000 ft. of 14-in. pipe against 600-ft. static head (*115 J 989*). At ALASKA-JUNEAU salt water was pumped from Gastineau channel, with two centrifugal pumps, 3,000 gal. per min. each; each pump direct-connected to a 400-hp. squirrel-cage induction motor (*120 P 251*). At ALASKA-GASTINEAU, treating 10,000 tons a day with 5.2 tons water per ton ore, there is sufficient gravity supply for five summer months; the remaining months salt water is pumped with three 2-stage Byron Jackson turbines of 1,000-, 2,000-, and 3,000-gal. per min. capacity respectively against a head of 275 ft., with the expenditure of 700 hp. (*63 A 488*). Water for the CHINO MILL, Hurley, N. M., is obtained from wells and streams, respectively 5 mi. south, 1 mi. northeast, 4 mi. and 5 mi. west, the last two using the same steel pipe line. The pump stations are equipped with Aldrich electric-driven pumps (*104 P 464*). Storage at Hurley is 3,000,000 gal. New water amounts to 18% of the 7.1 tons in circulation per ton of ore.

At the 4,000-ton PANDA concentrator at Katanga water is pumped from the river, 2 mi. distant, by two 3-stage centrifugal pumps, each of 3,300 gal. per min. capacity and each direct-connected to a 525-hp. synchronous motor. The pumps deliver through 24-, 26-, and 28-in. spiral-riveted pipe against 300 ft. head. After passing through the powerhouse condensers, the water is elevated another 200 ft. by three 2-stage pumps, each driven by 350-hp. synchronous motors. The capacity of the two mill reservoirs is 3,820,000 gal. (*29 MM 137*).

INSPIRATION, treating 14,700 tons ore per day (1924) obtained its daily supply of 6,700,000 gal. (1.89 tons per ton of ore) of new water from six wells, 300 ft. to 1,400 ft. deep in gravel, at a point 14,500 ft. from the mill (*G. H. Ruggles, PC*). Well pumps deliver through 1,000 ft. of 10-in pipe against a static head of 80 ft. to the station pumps operating against a static head of 520 ft. and delivering to a 3,000,000-gal. mill reservoir through a 20-in. pipe line. The line is partly of steel with leaded bell-and-spigot joints, partly of flanged pipe. Power requirements are 3.49 kw.-hr. per 1,000 gal. The approximate total cost is 5¢ per 1,000 gal. (=2.2¢ per ton of ore). For recovery of old water see Art. 3.

At the RAY CONSOLIDATED mill, Hayden, Ariz., treating 10,000 tons of ore per day, 35,000 tons of water per day is pumped from wells near the Gila River through 9,000 ft. of 26-in. wood-stave pipe against head of 310 ft. (*W. S. Boyd, PC*). The initial cost of the water plant was $400,000. Power for pumping is 1.3 kw.-hr. per 1,000 gal. (1.09 kw.-hr. per ton of ore) showing an over-all efficiency of 75%; the total cost of water is 3.4¢ per 1,000 gal. (2.85¢ per ton of ore). No provision for recovery of water has been found necessary. The water circulation in the gravity section of the mill (jigs, tables, vanners) was 6 tons per ton of ore.

At MIAMI, treating 7,000 tons of ore a day with an average water circulation of 3.5 tons per ton of ore, 1,600 gal. of new water per min. (1.4 tons per ton of ore) is pumped from wells and mine shafts 4 mi.

away, against a total head of 862 ft. with an expenditure of 3.5 kw.-hr. per 1,000 gal. at a cost of 7¢ per 1,000 gal. (2.3¢ per ton of ore). Old water to the amount of 2,500 gal. per min. (2.1 tons per ton of ore) is reclaimed from the tailing dam, against head of 160 ft., with an expenditure of 235 hp. and at cost of 1.5¢ per ton of ore. (For methods of reclaiming, see Art. 3.) In 1922 Miami spent 4.6¢ per ton of ore for mill water, or 7.1% of the total cost of milling.

Chemical composition of mill water may be important, especially when mine water is to be used. Mechanical troubles may be caused by the corrosion of metal by acid water, or by lime accretions deposited by hard water. Flotation is highly susceptible to variation in character of the water, with respect both to its soluble and its suspended matter, and certain special flotation methods require careful control of the character of water entering the mill.

In SOUTHEAST MISSOURI it is common practice to use mine water as far as it goes, supplemented by pumping stations on Big River and Flat River The water in circulation averages 7 to 11 tons per ton of ore, and a 3,000- to 4,000-ton mill can usually operate with a supply of new water amounting to 700 gal. per min. (4,200 tons per day), the principal loss occurring with flotation tailing. The mine water often carries as much as 30 grains of calcium and magnesium salts per gal., and the piping, launders, and tables of the mills require frequent cleaning (*57 A 322*). At TUL MI CHUNG mill, Korea, concentrating a highly complex sulphide ore exclusively by flotation (*33 I M M 2*), water is obtained by pumping from a reservoir fed by a stream which, during 9 months of the year, carries a large proportion of suspended clay in addition to dissolved salts corresponding to 44 parts total CaO and 12 parts MgO per million. Coagulation is effected by adding 300 lb. of lime to the 1,700 tons of water consumed per day (0.18 lb. lime per ton) followed by settling before pumping. Undissolved lime is injurious to flotation of this ore, but free alkalinity of 0.0004% CaO is helpful. Lime is not added during the 3 months that the water is clear.

At CONSOLIDATED COPPERMINES milk of lime was added to the discharged tailing just before it entered the final Dorr thickener, in order to overcome interference with flotation caused by sulphuric acid and iron salts. All mine water used in the mill was first sent to the same thickener, which was thereby made to act as a water-treatment plant, the overflow being returned to the main supply tank, while precipitated calcium sulphate and iron hydroxides were discharged with the thickened tailings. By a similar arrangement of flow at the UTAH CONSOLIDATED mill, constant character of mill water was maintained, although chemical treatment was not required. At the UTAH APEX mill, acid salts in the mine-water supply were neutralized, and at the same time a desirable flotation reagent was introduced, by adding sodium sulphide at the fine-crushing mills and combining the flotation tailing and new mine water in the same Dorr tank, the overflow of which returned to the storage supply, while the thickened tailing, carrying also the precipitated impurities from the mine water, passed over concentrating tables and thence to waste.

Water conservation may be necessary or advisable: (*a*) where new water is scarce or expensive; (*b*) to save cost in pumping new water, where the escaping water can be collected at an elevation above that of its original source; (*c*) to avoid stream pollution; (*d*) as an incident to impounding tailing.

The most notable examples of systematic conservation in the United States are found among the lead-ore concentrating mills of SOUTHEAST MISSOURI, which recover 80 to 90% of the mill water; the zinc mills of the JOPLIN DISTRICT, and the copper-flotation mills of the SOUTHWEST, whose average return of water ranges from 70 to 85%. The STA. BARBARA lead-carbonate concentrator in Mexico returns over 90% of its circulating mill water. (See Table 14.)

A tailing pond is the most common means for water recovery, sometimes in combination with mechanical devices, but frequently alone. For methods of forming retaining dams, see Art. 3. Water is clarified by natural sedimentation, or by discharging the slime portion of the tailing on top of a growing pile of sand tailing, which acts as a filter (*57 A 332, 420*). This latter method was formerly the usual practice in SOUTHEAST MISSOURI, but is now largely abandoned in favor of settling ponds.

Mechanical dewaterers, designed primarily for dewatering concentrate, sand tailing, etc., but incidentally yielding an overflow sufficiently clear to be returned to the mill circuit, can often be so placed as to afford considerable economy in returning water to the central supply tank. Devices of this type include the Allen, Boylan, Callow, Caldecott, and similar settling cones, the Akins, Dorr, Esperanza, and other varieties of screw or scraper dewaterers, and Dorr settling tanks of the smaller sizes. Filter water is also suitable for returning. If not wanted where it can be immediately conducted by gravity, the clear water can be returned to the main supply system by pumps discharging directly into the main water pipes in the mill, thereby avoiding a separate column pipe from each pump to the main pressure tank.

Clarifying tanks, for the primary purpose of reclaiming water and discharging thickened slime, are now commonly of the Dorr type, having the advantage of large capacity with small loss of mill height. Tanks of the larger sizes, 50 to 200-ft. diam., are frequently placed outdoors (except in cold climates) set with the bottom below the general level of the ground.

HYDRAULICS

[THE MATERIAL FROM THIS POINT TO THE END OF ART. 2 IS CONDENSED FROM SEC. 27, FIRST EDITION, AS WRITTEN BY CHAS. T. PORTER]

Dams. Unit pressure at distance h below the surface in a body of still water is $p = wh$ where w = weight of a cubic unit of water and h = depth below the surface, called HEAD. Pressure per sq. ft. is $p = 62.5h$. TOTAL NORMAL PRESSURE on any submerged area is $p_n = wAh_0$, where A = total area in sq. ft. and h_0 = the vertical distance from the surface to the center of gravity of the area in ft. In the case of a VERTICAL DAM of height = h, the area per lin. ft. is h and $h_0 = h/2$, hence $p_n = wh^2/2$. PRESSURE IN A GIVEN DIRECTION is $p_1 = p_n \cos\theta = wA_1h_0$, where θ is the angle between the given direction and the normal and A_1 is the projection of the submerged surface on a plane normal to the given direction. CENTER OF PRESSURE of a submerged surface is the point of application of the resultant pressure.

For a RECTANGLE with the top in the liquid surface, the depth of the center of pressure is $\frac{2}{3}h$. For submerged rectangles the total pressures and centers of pressure may be found by constructing pressure diagrams (Fig. 2). The area of the diagram represents total pressure and the c.g. of the diagram is opposite the center of pressure. A general rule for location of the center of pressure is: $y_p = I/S$, where I is moment of inertia of the area, S is the moment of the area (= area × distance of c.g. from the axis), and y_p is the arm of the center of pressure, all with respect to an axis which is the intersection of the plane of the submerged surface with the water level. A more convenient form is $y_p = y_0 + k_0^2/y_0$, where y_0 is the distance from the axis to the c.g. and k_0 is the radius of gyration of the submerged area about its c.g. The distance k_0^2/y_0 becomes negligible when the head exceeds three or four times the vertical dimensions of the submerged surface.

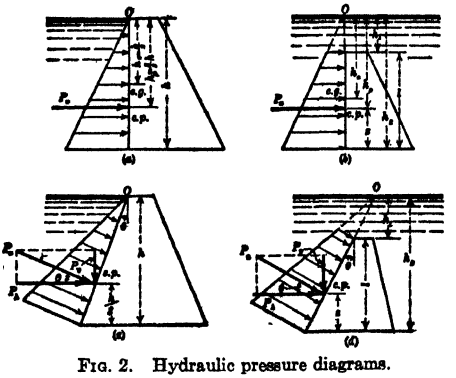

FIG. 2. Hydraulic pressure diagrams.

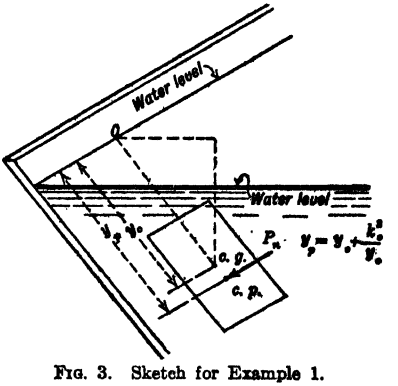

FIG. 3. Sketch for Example 1.

Example 1. A square gate, 2 × 2 ft., inclined 60° from the horizontal, with its c.g. 5 ft. below the surface, covers a rectangular opening (Fig. 3). The gate is hinged at the upper edge and it is required to find the moment about the hinge necessary to open the gate.

$p_n = wAh_0 = 62.5 \times 4 \times 5 = 1{,}250$ lb. $y_0 = 5$ sec $60° = 5.77$ ft. $y_p = 5.77 + 0.333/5.77 = 5.828$ ft. Moment about hinge = $1{,}250 \times 1.05 = 1{,}320$ lb.-ft.

Example 2. A vertical wall has 15 ft. of water on one side and 6 ft. on the other. Find the overturning moment on the wall per lin. ft.

$p_1 = 62.5 \times 15^2/2 = 7{,}040$ lb. $p_2 = 62.5 \times 6^2/2 = 1{,}125$ lb. $M = 7{,}040 \times 15/3 - 1{,}125 \times 6/3 = 32{,}950$ lb.-ft.

Percolation. If water percolates under a rectangular masonry dam in such a way that full hydrostatic pressure is developed, the upward pressure of water decreases the stability against overturning as though the unit weight of the masonry were decreased 62.5 lb. per cu. ft. Such percolation should be prevented by cutoff walls and drains.

Pressure on gates and tanks. Resultant pressure on a submerged gate is due to the difference of head h on the two sides and is of uniform intensity over the whole of the submerged surface. Pressure $p = wAh$; the intensity is constant and the center of pressure and c.g. coincide.

Unit tensile stress in a pipe or circular tank is given by the formula for HOOP TENSION, $Pd = 2St$, where P is internal pressure in lb. per sq. in., d is diameter in inches, t is thickness of shell, and S is the unit stress in lb. per sq. in. The lower limit of applicability is $d = 30t$; the expression applies to pipes, steel tanks, steel bands for wood-stave pipe and steel for reinforced concrete tanks.

Example. A standpipe 60 ft. high and 30 ft. diameter is to be built of riveted steel plates, the efficiency of the joints being 70% and allowable stress 10,000 lb. per sq. in.

Divide the pipe into any number of sections (say five) and design each section for the internal pressure at its lower edge. For the lowest section, $P = 0.434 \times 60 = 26.04$; therefore $26.04 \times 360 = 2 \times 10{,}000 \times t \times 0.70$, and $t = 0.67$ in. or 3/4-in. plates. The other sections would be made of 1/2-, 3/8-, and 1/4-in. plates respectively. The same principle of division applies to spacing steel bands on wood-stave tanks and reinforcing bars in concrete tanks.

Transport of water from source or storage to the point of consumption is effected either in open channels or in some form of pipe. Flow through such channels is in accord with certain theoretical laws, modified by friction losses, as follows.

Torricelli's theorem. The velocity v of flow of a jet discharging under a head of h ft. is the same as the velocity acquired by a body falling freely through the height h, thus $v = \sqrt{2gh}$.

Bernouilli's theorem. For steady frictionless flow the sum of the pressure head and the velocity head equals the hydrostatic head that obtains when there is no flow. For actual conditions involving friction, the sum of the pressure head, velocity head, and elevation head above some assumed datum plane at some station 1 equals the sum of the corresponding heads at any other station 2, plus FRICTION HEAD h_f if 2 is downstream, and minus if upstream. If $h = p/w$ = pressure head, and z = elevation head above the assumed datum plane, $h_1 + z_1 + v_1^2/2g = h_2 + z_2 + v_2^2/2g + h_f$.

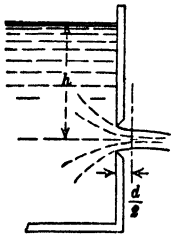

FIG. 4. Standard orifice.

Flow from orifices. Discharge from a standard orifice of diameter d (Fig. 4) contracts, at a distance $d/2$ from the plane of the orifice, to an area that is 62% of that orifice, at which point pressure head becomes zero and velocity attains substantially the value $v = \sqrt{2gh}$. The ratio of contracted area to area of orifice is C' = the COEFFICIENT OF CONTRACTION. Actual velocity is given by $v = C_1\sqrt{2gh}$ where C_1 is COEFFICIENT OF VELOCITY. Discharge is the product of velocity and area of the contracted jet and is

$$q = C'C_1A\sqrt{2gh} = CA\sqrt{2gh}$$

where C is the COEFFICIENT OF DISCHARGE and A is the area of the orifice.

Standard orifice gives an accurate measure of the flow of water. Its center should be at least $3d$ from the sides and bottom of the tank; the edges should be sharp. For SMALL ORIFICES, 1 in. or less in diameter, C may be taken as 0.61 for circular and 0.62 for square orifices. FOR LARGER ORIFICES and HIGH HEADS the average value of $C = 0.597$ for circular orifices and 0.604 for square orifices may be used. Error of less than 3% may be expected. If greater accuracy is desired, the orifice should be calibrated; whereupon an error less than 1% may be obtained.

Large orifices under low heads. For a rectangular orifice of breadth b: $q = 2/3C\sqrt{2g}\cdot b(h_2^{3/2} - h_1^{3/2})$ where h_1 and h_2 are the heads on the top and bottom of the orifice respectively, and the head on the center of gravity of the orifice ($h_{c.g.}$) is less than three times the depth of the orifice.

Submerged orifices. Discharge is slightly less than into the atmosphere; the difference is negligible for large orifices; for orifices 1 in. in diameter or less it may be 2%. The value of $C = 0.60$ is in general use.

Velocity of approach to an orifice adds velocity head $h_v = v_a^2/2g$, where v_a = such velocity, and EFFECTIVE HEAD is $H = h + v_a^2/2g$. Then $q = CA\sqrt{2gH}$. If the approach channel and the orifice have areas a and A respectively,

$$v = C_1\sqrt{\frac{2gh}{1 - C^2\left(\frac{A}{a}\right)^2}}; \quad q = A\sqrt{\frac{2gh}{\left(\frac{1}{C}\right)^2 - \left(\frac{A}{a}\right)^2}}$$

and for a RECTANGULAR ORIFICE under low heads,

$$q = 2/3C\sqrt{2g}\cdot b[(h_2 + h_v)^{3/2} - (h_1 + h_v)^{3/2}]$$

Suppression of contraction is effected by an internal projection at the perimeter of the orifice. Suppression increases discharge. For a square orifice with one side suppressed the increase is about 3.5%; two sides, 7.5%. For rectangles with the lower edge suppressed the increase is 6 to 7%, if $b = 4d$, and 8 to 12%, if $b = 20d$. Avoid suppressed orifices for accurate work.

Discharge under a falling head. If Y is area enclosed by the water line when the head on an orifice is y, the time for the head to fall from H to h is

$$t = \int_h^H \frac{Y_y - 1/2}{CA\sqrt{2g}}\,dy$$

where Y is, in general, some function of y. If the cross section is constant and equal to a, the time to empty a vessel is $t = 2a\sqrt{H}/CA\sqrt{2g}$, which is twice that required to discharge a similar amount under a constant head H.

The miner's inch is a unit of flow used in mining and irrigating work; it is rapidly becoming obsolete. It is defined as the discharge from an orifice one inch square under a head on its center of 6.5 in. The value of this unit and its definition vary in different states. The legal equivalent in California is 40 miner's inches = 1 cu. ft. per sec., in Colorado 38.4, while in Arisona, Idaho, Nevada, and Utah, the value is 50, by common agreement.

Flow under pressure. When water in a closed vessel is under unit pressure p in addition to its own weight, the velocity and discharge from an orifice are found by computing the equivalent head in feet, $H = h + p/w$. If discharge takes place into a vessel in which the unit pressure is p_0, the equivalent head is $H = h + p/w - p_0/w$.

Example. A 1-in. circular orifice under a head of 10 ft. and an additional pressure of 10 lb. per sq. in. discharges into a 26-in. vacuum and it is desired to find the discharge.

The 26-in. vacuum is equivalent to a negative head of $26 \times 34/30 = 29.5$ ft., which increases the effective head, hence $H = 10 + 10 \times 2.304 + 29.5 = 62.5$ ft. $q = CA\sqrt{2gH} = 0.61 \times 0.00546\sqrt{64.4 \times 62.5} = 0.212$ cu. ft. per sec.

Short tubes of length 2 to 3 diameters are treated as orifices. LONG TUBES are classified as pipes. Addition of a short tube to an orifice decreases velocity but increases discharge, although friction losses are increased, because the jet after contraction re-expands to fill the tube. Fig. 5 shows common types of tubes and end connections.

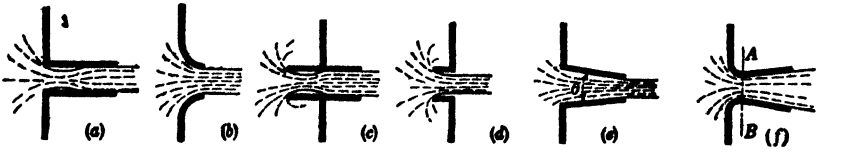

FIG. 5. Short tubes and mouthpieces.

Item (*a*) is the STANDARD SHORT TUBE for which $C' = 1.0$, $C_1 = C = 0.82$, provided the jet re-expands to fill the tube. For high heads the discharge may jump clear of tube, when the device becomes a standard orifice with $C = 0.61$. (*b*) is a ROUNDED ORIFICE which has a coefficient of discharge varying from 0.61 to 0.99 depending upon the curvature. Even slight dulling of the edge of a standard orifice increases discharge several per cent. while if the curvature of the orifice conforms to the direction of the stream lines, the contraction is entirely suppressed and $C_1 = C = 0.96$–0.99. This is an ideal end connection to avoid energy losses. (*c*) is an inward-projecting tube for which $C_1 = C = 0.72$. It is a common type of end connection for a pipe line when no attempt is made to avoid entrance losses. (*d*) is BORDA'S TUBE for which $C = 0.5$–0.53. (*e*) is a conical converging tube, the discharge from which varies with the value of the angle θ; the maximum value of C is 0.94, which occurs when $\theta = 13.5°$. (*f*) is a VENTURI OR COMPOUND TUBE composed of a rounded orifice and an expanding tube with angle of about 10°. Pressure at section AB is less than atmospheric and may be as low as -24 ft.; the equivalent head is $h + 24$, which gives theoretical values of $C = 8$ or 9 for section AB. Experiments by Francis show C actually to be as high as 2.43. The coefficient for the discharge end is always less than unity.

Loss of head for any pipe or orifice discharging freely with velocity v under total head h is $h_f = h - v^2/2g$. Loss of head for an orifice or tube whose coefficient of velocity is C_1 is

$$h_f = (1 - C_1^2)h = (1/C_1^2 - 1)v^2/2g.$$

Example. For a standard orifice, $h_f = 0.04h = 0.041v^2/2g = 0.11v_0^2/2g$ where v_0 is the velocity in the plane of the orifice. For a standard short tube (Fig. 5, *a*), $h_f = 0.33h = 0.49v^2/2g$. For an inward-projecting tube (Fig. 5, *c*), $h_f = 0.48h = 0.93v^2/2g$.

Nozzles. Types of nozzle tips are shown in Fig. 6. SMOOTH NOZZLE is most common. If properly designed there should be no contraction and $C_1 = C = 0.97$–0.99. The RING TIP was designed from the mistaken notion that the ring would increase velocity. The coefficient of velocity is the same as for the smooth type while the coefficient of discharge depends on the relative areas of opening and ring. For a SQUARE RING an average value is $C = 0.74$ while an UNDERCUT RING has a value somewhat less. The NEEDLE NOZZLE is designed to regulate flow by moving the needle in and out and has an efficiency of 95 to 98%; the coefficient of discharge varies from 0.82 to 0.95, being least when the nozzle is nearly closed. Expressions for the velocity and discharge through a nozzle are the same as those for an orifice with velocity of approach.



FIG. 6. Types of nozzle tips.

Discharge in gallons per minute from a nozzle D in. diameter, attached to a pipe d in. diameter, with the pressure at the base of the tip = p lb. per sq. in. is

$$q = 29.83D^2\sqrt{\frac{p}{(1/C)^2 - (D/d)^4}}.$$

A standard fire stream is one flowing 250 gal. per min. through a 1 1/8-in. smooth nozzle with a pressure at the base of the tip of 45 lb. per sq. in. The hydrant pressure required to throw this stream through 50 ft. of the best rubber-lined hose is 56 lb. per sq. in.; for 200 ft., 77 lb. per sq. in. The pressure drop per 100 ft. of best-quality hose is about 14 lb. per sq. in.; for poor-quality hose it may be double this figure. The best hydrant pressure for fire service is 80 to 100 lb. per sq. in.

Power of a jet discharging W lb. per sec. is $Wv^2/2g = wAv^3/2g$ ft.-lb. per sec., where w = weight of a cu. ft. of fluid, A = cross-section of the jet in sq. ft., and v = velocity in ft. per sec. HORSEPOWER = $wAv^3/1{,}100g$. Power of a jet discharging from an orifice or nozzle (coefficient of discharge = C and coefficient of velocity = C_1) is $P = CC_1wA\sqrt{2g}\,h^{3/2}$ ft.-lb. per sec. The efficiency of such a jet is $E = C_1^2$.

Example. The respective powers of a standard orifice and standard short tube are $0.58wA\sqrt{2g}\,h^{3/2}$ and $0.55wA\sqrt{2g}\,h^{3/2}$. Corresponding efficiencies are 96% and 67% respectively.

Impulse of a jet in a given direction in pounds is $W/g \times$ *change of velocity in that direction*, in which W = lb. of water deflected per sec. If the jet impinges on a flat plate (Fig. 7, *a*), the impulse is Wv/g lb.; if direction is reversed without loss in friction (Fig. 7, *b*) the impulse is $2Wv/g$; while for a curved vane (Fig. 7, *c*) the impulse in the original direction of jet is $Wv(1 - \cos\theta)/g$. If a jet discharging W lb. per sec. strikes a flat plate moving in the direction of the jet with velocity u, the water that strikes the plate per sec. is $W(v - u)/v$ and the impulse in direction of motion is $W(v - u)^2/vg$. If the jet strikes a series of flat vanes so that all the water discharged strikes some vane, the impulse is $W(v - u)/g$.

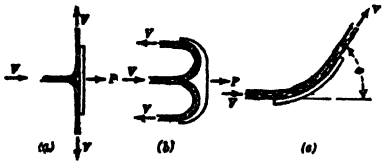

FIG. 7. Impinging jets.

Reaction of a jet issuing from the side of a vessel is $R = Wv/g = wAv^2/g = 2wAh$, in which w = weight per cu. ft. of the fluid, A = cross-section of the jet in sq. ft., and h = head on orifice in ft. The reaction is equal to the impulse of the jet on a flat plate and is twice the hydrostatic head. If the jet issues from a standard orifice with coefficient of velocity 0.98 and coefficient of contraction = 0.62, the reaction of the jet on the containing vessel is $R = 1.22wAh$.

A **weir** is a dam or obstruction placed in an open channel, over which water is caused to flow, or a notch in the side of a vessel through which water flows. If the top or CREST of the weir is a thin plate with a sharp edge, flow is analogous to that through a rectangular orifice with head on the upper edge = zero. If the weir is a rectangular notch with ends $3H$ or more from the walls of the approaching channel, full contraction of the stream is developed and the device is known as a CONTRACTED WEIR (Fig. 8, *a*). If the length of the weir is the same as that of the approaching channel, so that no contraction takes place at the ends, the weir is called a SUPPRESSED WEIR (Fig. 8, *b*).

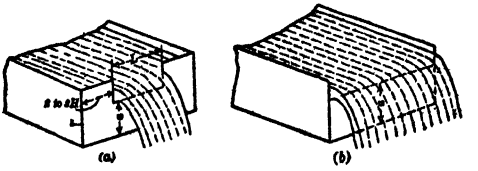

Contracted weir. Suppressed weir.

FIG. 8. Weirs.

Discharge from a weir. The theoretical discharge is $Q = {}^2/_3\sqrt{2g}\,LH$, and the actual, $Q = {}^2/_3C\sqrt{2g}\,LH^{3/2}$, in which H is the height above the crest of the weir to the level of still water, L is the length of crest over which water is flowing, and C is a constant which varies slightly with the type of weir and head but has an approximate value of 0.62.

Velocity of approach. It is not always possible to measure the head H to the level of still water on account of velocity in the approaching channel. Mean velocity of approach v_a is found by dividing the discharge by the cross-section of the approach channel and the corresponding velocity head $h_v = v_a^2/2g$. The observed head H must be increased by some function of the velocity head, giving the general form

$$Q = {}^2/_3C\sqrt{2g}\,L(H + nh_v)^{3/2}$$

in which n varies from 1.00 to 2.00 depending on the ratio of head to height of crest above the bottom and on the ratio of mean velocity of approach to surface velocity.

Francis formulas for SUPPRESSED WEIRS are $Q = 3.33LH^{3/2}$ and $Q = 3.33[(H + h_v)^{3/2} - h^{3/2}]$. Later investigators prefer the form $Q = 3.33L(H + 1.4h)^{3/2}$.

For CONTRACTED WEIRS Francis decreased the length L by $0.1H$ for each end contraction, making the expression for the ordinary rectangular notch

$$Q = 3.33(L - 0.24)(H + 1.4h)^{3/2}$$

These formulas are widely used and should give results within 1 to 3% for carefully constructed SUPPRESSED WEIRS with heads from 0.3 to 2.0 ft.; for $H = 0.2$, increase the discharge 3%; and for $H = 0.1$, increase 7%. If the height of crest a exceeds $4H$, the influence of velocity of approach will cause increase in discharge of 1% or less, which is negligible in view of other uncertainties. For CONTRACTED WEIRS, which are a little less accurate, velocity of approach is negligible unless the ratio of H to a is abnormally high.

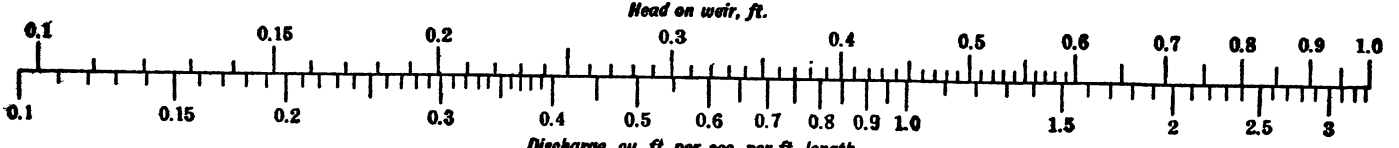

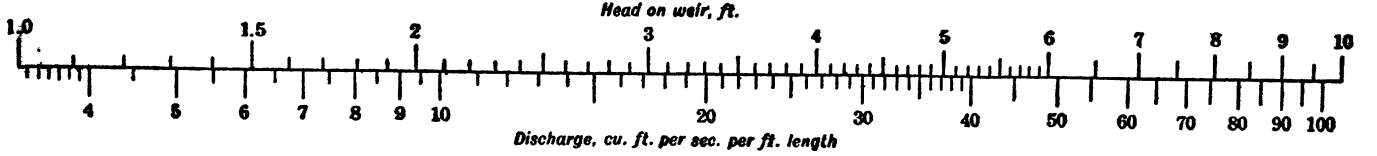

Weir-discharge scale. Francis formula

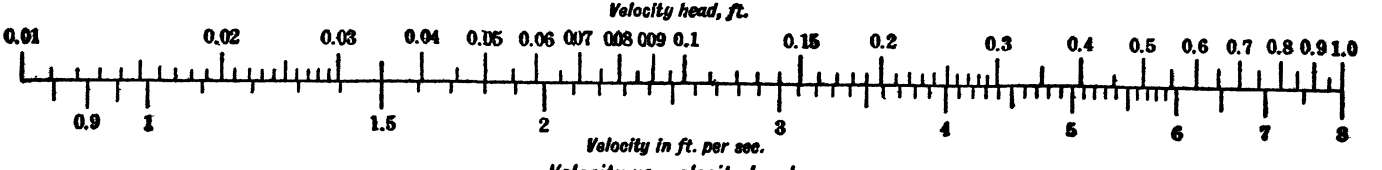

Velocity vs. velocity head

FIG 9. Scales for weir calculations.

Fig. 9 gives the discharge in cu. ft. per sec. per ft. of length by the Francis formula. To use the scale, find first the approximate discharge, neglecting velocity of approach. Divide this by the area of the approaching channel to get v. Replace H by $H + 1.4v^2/2g$, taking the value of the velocity head from Fig. 9. For CONTRACTED WEIRS replace L by $L - 0.2H$.

Example 1. Find the discharge from a SUPPRESSED WEIR 4 ft. long under a head of 0.625 ft.; crest 2 ft. above the bottom of the channel.

From Fig. 9, the discharge per ft. of length is 1.65; hence $Q = 6.60$. The area of the channel is $4 \times 2.625 = 10.5$ sq. ft., hence $v_a = 0.628$ ft. per sec. and $h_v = 0.0061$. Then $H = 0.625 + 1.4 \times 0.0061 = 0.6335$ and $Q = 6.72$ cu. ft. per sec.

Example 2. A CONTRACTED WEIR is to be designed to discharge 4 cu. ft. per sec.

Either the length or the head may be assumed for purposes of trial. Assuming $H = 0.5$, the discharge per foot of width is 1.18 and the necessary width is $4/1.18 = 3.4$. Adding $0.2H$ for the effect of end contractions the width is 3.5 ft., which lies between $4H$ and $8H$ and hence is satisfactory. End contractions should have a minimum value of 1 ft. each, making the width of channel 5.5 ft. The depth of crest should not be less than 1.5 ft., making the area of the approach channel 11 sq. ft.; velocity of approach, 0.364; and velocity head $h_v = 0.0019$, which is negligible.

Bazin formula. $Q = m\sqrt{2g}\,LH^{3/2}$, where $m = (0.405 - 0.00984 - H)\,[1 - 0.55(H/A - H)^2]$ in which a is the height of the crest above the bottom of the approaching channel. This formula needs no correction for velocity of approach and is probably the most accurate for a wide range of heads. It may be used safely for heads between 0.2 and 6.0 ft. For extremely low heads it gives high results.

Measurement of flow by weirs is the standard method for moderate flows. For correct results, the crest must be level and have sharp or square edges; the sheet of water or NAPPE must jump free of the downstream face and allow free access of air to the under side. In SUPPRESSED WEIRS the channel walls should extend beyond the crest to prevent lateral expansion of the nappe. If END CONTRACTIONS are used they should be at least $2H$ and preferably $3H$ or more in length to develop full contraction, and the height of crest a (Fig. 8) should be at least, $3H$. It is preferable that the length L be between $4H$ and $8H$, although weirs of 20 ft. or more in length are in common use. The velocity of approach should be low. For a CONTRACTED WEIR the area of the approach channel should be $6LH$ or more, which makes the velocity of approach negligible. HEAD should be measured accurately a distance more than $6H$ upstream to eliminate the slope of the surface toward the weir. For approximate work a stake is driven into the channel above the weir with its top level with the crest, and head is measured directly by a scale held upon this stake. For more accurate work water is led from the channel to a pail upon which a hook gage is mounted.

Triangular-notch weirs are convenient for measurement of very small to moderate discharges and give good results for heads between 3 and 10 in. DISCHARGE is $Q = {}^4/_{15}c\sqrt{2g}\,LH^{3/2}$, where L is width of notch H ft. above the vertex; $c = 0.60$ for angles at vertex of 90° and 60°. For a 90° weir $L = 2H$ and $Q = 2.53H^{5/2}$ cu. ft. per sec.

Trapezoidal or Cippoletti weir is designed with end slopes of one horizontal to four vertical, which will just compensate for the effect of end contractions. DISCHARGE is then given by the Francis formula $Q = 3.33LH^{3/2}$. Some authorities give $Q = 3.36/LH^{3/2}$.

ROUNDING OF CREST suppresses contraction and increases discharge. INCLINING UPSTREAM FACE with the current increases discharge while sloping the face upstream causes decrease. WIDENING THE CREST so that the nappe no longer jumps free increases friction and reduces discharge.

Dams and spillways may be regarded as weirs; they are by no means accurate as measuring devices. The coefficient in the Francis formula varies from 2.6 to 4.0 or more depending on the form of dam. For a wide flat-topped dam with width of crest greater than H the coefficient is 2.64, giving discharge 80% of standard. Rounding the crest to conform to stream lines and inclining the upstream face with the current gives a coefficient of 4.0 or more. For such a dam the discharge varies from 97 to 120% of standard as the head varies from 0.5 to 4 ft. In designing a waste weir or spillway, the probable flood discharge should be estimated, a large factor of safety introduced, and the dimensions of the weir determined from $Q = MLH^{3/2}$. A common value of M is 3.0.

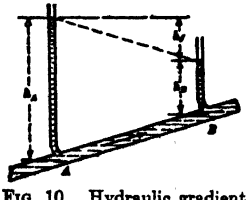

FIG. 10. Hydraulic gradient for pump-delivery pipe.

Flow in pipes. When water flows in a pipe under pressure there is a continuous loss of pressure head due to friction between the water and the pipe, and internal friction in the water. This condition is shown by Fig. 10, which shows pressure heads necessary in pumping water from A to B. Friction head h_f varies widely with the nature and condition of pipe, diameter, and velocity of flow. Many formulas have been proposed, but even for carefully laid new pipe a discharge within 10% of calculated value is all that may be expected. After a few months friction may increase as much as 20% and in the course of years the diameter may be reduced 50% by rust; this deposit forms more rapidly in some waters than others so that each case is a special problem. Friction factors are given for both new and old pipes and in pipe diagrams allowances are made for decrease of capacity with age.

Secondary losses of head are negligible in long pipes but may be a large part of the total loss in pipes of length $50d$ to $500d$. LOSS AT ENTRANCE $= mv^2/2g$ where $m = 1/C_1^2 - 1$, in which C_1 is the

coefficient of velocity for end connection; $m = 1.0$ for inward projecting pipes, 0.5 for square-edged entry with end of pipe flush with the inside of the reservoir wall, and 0 for rounded edge conforming to stream-line flow. Loss DUE TO 90° BENDS is the same as that for straight pipe of length 10 to 20d; it is smallest when radius = 3d; it is greater for large pipes than for small ones, varying approximately as d. Loss DUE TO VALVES is uncertain but equivalent to a length of 6d at full gate. Loss DUE TO EXPANSION OF SECTION occurs when water flowing in a small pipe with velocity v_1 suddenly enters a large pipe in which the velocity is v_2; this loss is $h_i = (v_1 - v_2)^2/2g$. It occurs in hydraulic machines, pipes, and channels, whenever the section of flowing water is suddenly enlarged; it can be prevented by having the increase gradual, as in the Venturi meter. Loss DUE TO SUDDEN CONTRACTION OF SECTION is similar to that at the entrance to square-edged pipe; it depends on the ratio of pipe diameters and has a maximum value of $0.5v^2/2g$, in which v is the velocity in the smaller pipe.

Hydraulic gradient is a line that represents the height of the pressure head at any point in a pipe line. Fig. 11 shows this line for a short horizontal pipe with square-edged entry.

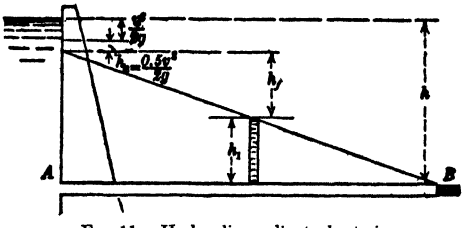

FIG. 11. Hydraulic gradient, short pipe.

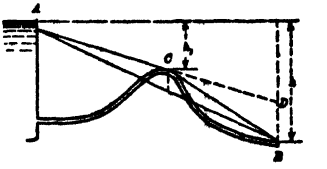

FIG. 12. Pipe above hydraulic gradient.

The pressure at any point is found from the relation: *pressure head = total head − velocity head − lost head.*

When there is no flow, the head at B is h. When free discharge occurs at B, the drop at A = the velocity head $v^2/2g$ plus entrance loss, $h_e = 0.5v^2/2g$; the head then drops uniformly to zero at B. If the pipe were laid on the hydraulic gradient there would be no pressure head and the slope would be just sufficient to give the required flow.

When a pipe rises above the hydraulic gradient (Fig. 12), negative pressure occurs at C. If this pressure is less than 25 ft., water will siphon over and discharge at B under head h. But it is almost impossible to keep the pipe air tight and air dissolved in the water is liberated under the reduced pressure; hence air collects at C and breaks the vacuum. The pipe then discharges at C under head h_1; section CB acts as a conduit running partly full. This may be avoided by closing a valve at B until the hydraulic gradient rises above C, then opening an air valve at C. Negative pressure at C may be avoided by a compound pipe that makes the hydraulic gradient ACB, Fig. 12. Fig. 13 shows the hydraulic gradient for a long compound pipe in which velocity head and secondary losses have been neglected. If the friction factor f is assumed the same for each pipe, the slope of the gradient varies as v^2/d, and since the discharge q is the same for each section, v varies as l/d^2, hence the slope varies inversely as d^5.

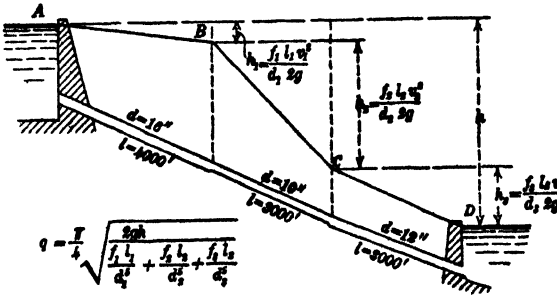

FIG. 13. Hydraulic gradient for compound pipe.

Flow in short pipes. If the loss at entrance is $mv^2/2g$ and loss due to bends, valves, and other secondary causes is $m_1v^2/2g$, then $h - v^2/2g = (m + m_1 + fl/d)v^2/2g$ and $v = \sqrt{2gh}/\sqrt{1 + m + m_1 + fl/d}$. If losses due to valves, bends, etc., are allowed for by using an equivalent length of straight pipe, the velocity and discharge for square-edged entry are

$$v = \sqrt{\frac{2gh}{1.5 + f\frac{l}{d}}} \quad \text{and} \quad q = 0.7854d^2\sqrt{\frac{2gh}{1.5 + f\frac{l}{d}}}$$

from which the diameter in feet required for discharge q is

$$d = 0.479(1.5d + fl)^{1/5}(q^2/h)^{1/5}$$

To solve the equation for diameter, use a trial value of $f = 0.02$ and omit the term $1.5d$ for the first approximation. Use a value of f from Table 17 that corresponds with the approximate value of d and solve again. For very short pipes where $l < 50d$, the coefficient m should be replaced by $1/C_1^2 - 1$ and l by $l - 3d$; hence $v = \sqrt{2gh}/\sqrt{1/C_1^2 + f(l - 3d)/d}$.

Long pipes. Where length exceeds $4{,}000d$, secondary losses and velocity head are omitted and the formulas become

$$v = \left(\frac{2ghd}{fl}\right)^{1/2} \qquad q = 6.3\left(\frac{hd^5}{fl}\right)^{1/2} \qquad d = 0.479\left(\frac{flq^2}{h}\right)^{1/5}$$

From Darcy's experiments the friction factor $f = 0.02 + 0.00167/d$, where d is in feet, for new clean cast-iron pipe with well-laid joints, and twice this value for old, foul pipe. This value is too high for large cast-iron pipe and wood-stave pipe and too low for riveted steel pipe. Table 17 gives Merriman's values for f for new well-laid cast-iron pipe (*Treatise on Hydraulics*, John Wiley & Sons). For OLD PIPE these values should be multiplied by 2 for diameters of 3 in. or less and by 1.5 for 36 in. or more. Choice of a multiplier is a matter of judgment. To determine the diameter required for a given discharge, use a trial value of $f = 0.02$ and solve. Then select the value of f that corresponds to the first result and solve again. Pipe-flow diagrams lessen labor and are sufficiently accurate.

Table 17. Friction factors (f) for clean iron pipes

Diameter in feet	Velocity, in feet per second						
	1	2	3	4	6	10	15
0.05	0.047	0.041	0.037	0.034	0.031	0.029	0.028
0.1	0.038	0.032	0.030	0.028	0.026	0.024	0.023
0.25	0.032	0.028	0.026	0.025	0.024	0.022	0.021
0.50	0.028	0.026	0.025	0.023	0.022	0.020	0.019
0.75	0.026	0.025	0.024	0.022	0.021	0.019	0.018
1.00	0.025	0.024	0.023	0.022	0.020	0.018	0.017
1.25	0.024	0.023	0.022	0.021	0.019	0.017	0.016
1.50	0.023	0.022	0.021	0.020	0.018	0.016	0.015
1.75	0.022	0.021	0.020	0.018	0.017	0.015	0.014
2.00	0.021	0.020	0.019	0.017	0.016	0.014	0.013
2.5	0.020	0.019	0.018	0.016	0.015	0.013	0.013
3	0.019	0.018	0.016	0.015	0.014	0.013	0.012
3.5	0.018	0.017	0.016	0.014	0.013	0.012	0.012
4	0.017	0.016	0.015	0.013	0.012	0.011	.....
5	0.016	0.015	0.014	0.013	0.012	.....	.....
6	0.015	0.014	0.013	0.012	0.011	.....	.....

Example. Find the diameter required to deliver 7 cu. ft. per sec. through a pipe 5,000 ft. long under a head of 25 ft.

TRIAL SOLUTION: $d = 0.479(0.02 \times 5{,}000 \times 7^2 \div 25)^{1/5} = 1.37$ ft., for which $v = 4.7$. The corresponding value of $f = 0.021$, hence $d = 1.39$ ft. or 16.7 in. The commercial size selected should be 16 or 20 in.

Chezy formula is most generally used for investigation of flow in long pipes, channels, and conduits. It states that $v = C\sqrt{Rs}$, in which C is a constant, R is the hydraulic radius in ft., and s is the slope of the hydraulic gradient. The formula applies to everything from smooth pipes to turbulent streams.

Table 18. Chezy constant (C) for cast-iron pipe

Diameter of pipe, inches	Velocity, in feet per second							
	New pipes				Old pipes			
	1	3	6	10	1	3	6	10
3	95	98	100	102	63	68	71	73
6	96	101	104	106	69	74	77	79
9	98	105	109	112	73	78	80	84
12	100	108	112	117	77	82	85	88
15	102	110	117	122	81	86	89	91
18	105	112	119	125	86	91	94	97
24	111	120	126	131	92	98	101	104
30	118	126	131	136	98	103	106	109
36	124	131	136	140	103	108	111	114
42	130	136	140	144	105	111	114	117
48	135	141	145	148	106	112	115	118
60	142	147	150	152	.....	.....	.....	.....

Table 19. Chezy constant (C) for riveted-steel pipe

Diameter of pipe, inches	Velocity, in feet per second			
	1	3	5	10
3	81	86	89	92
11	92	102	107	115
11	93	99	102	105
15	109	112	114	117
38	115	113	113	113
42	102	106	108	111
48	105	105	105	105
72	110	110	111	111
72	93	101	105	110
103	114	109	106	104

HYDRAULIC RADIUS OR HYDRAULIC MEAN DEPTH is the section area of the flowing stream divided by the wetted perimeter and is expressed in feet. Velocity and discharge vary with R and are maximum for a given area when R is maximum. If p = wetted perimeter and A = section area, $R = A/p$; hence for circular conduits full or half full $R = d/4$ and for a rectangular flume b ft. wide and d ft.

deep $R = bd/(b + 2d)$. SLOPE OF HYDRAULIC GRADIENT is the friction head per unit of length; hence $s = h_f/l$. It is given as feet per 1,000 ft., ft. per mile, and as a ratio. The CHEZY CONSTANT, C, varies with R, s, and with the nature of the conduit; it is made to embrace a wide variety of conditions. See Tables 18 and 19.

Discharge of a pipe running full is given by the Chezy formula as $q = (C\pi d^2\sqrt{ds})/8$; also $d = (8q/\pi c\sqrt{s})^{2/5}$. The diameter is best found by trial using a tentative value of $C = 125$.

Relation between friction factor and Chezy constant. The Chezy formula applied to pipes under pressure is in the same form as the friction-factor formula for long pipes, $v = \sqrt{2ghd/fl}$. Replacing s by h/l and R by $d/4$, $v = C\sqrt{dh/4l}$. Equating these two values of v, there results $f = 8g/C^2$.

Pipe-flow diagrams. Fig. 14 (*U. S. Reclamation Service*) shows the relation between discharge, friction head, velocity, and diameter; if any two are known the other two may be determined.

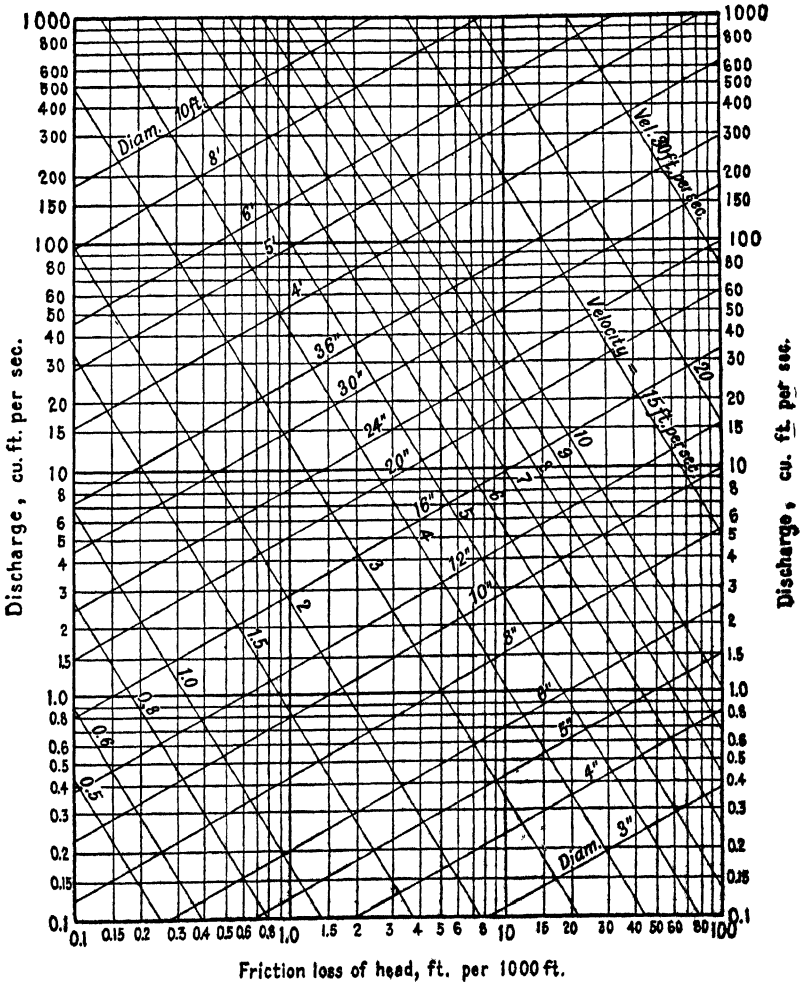

FIG. 14. Pipe flow, U. S. Reclamation Service formula.

The diagram is based on the formula $h_f = 0.38v^{1.86}/d^{1.25}$ in which h_f is friction head per 1,000 ft. of length. The constant and the exponents of v and d are based on average results of a large number of experiments; results agree quite closely with those obtained by use of Tables 18 and 19, and with

values found by Kutter's coefficient $n = 0.011$ (page 20–33). Results are for cast-iron and wrought-iron pipe in good condition; for OLD PIPE in service 10 yr. or more and for riveted-steel pipe, the friction head should be multiplied by 1.45 to 1.63 and discharge divided by 1.20 to 1.28 for velocities of 2 to 5 ft. per sec. For this case the formula is $hf = 0.50v^2/d^{1.25}$.

Example. New pipe 2 mi. long is to discharge 10 cu. ft. per sec. with drop of head of 40 ft. What diameter is required?

$s = 40/10{,}560 = 0.00379$ or 3.79 ft. per 1,000 ft. Enter the diagram on the vertical line representing 3.79 ft. per 1,000; at intersection with the horizontal line representing 10 cu. ft. per sec. read 20-in. pipe required. If the pipe is to remain in service 10 yr. or more, divide discharge by 1.25; 20-in.pipe gives 10.8 + 1.25 = 8.65 cu. ft. per sec. and 24-in. pipe gives 13.6 cu. ft. per sec.

Hazen-Williams formula, $v = 1.318CR^{0.63}s^{0.54}$ is based on average results.

The constant 1.318 is introduced to make the coefficient C approximately the same as in the Chezy formula. Hazen and Williams values for C are: best cast-iron pipe, 140; good new cast-iron pipe, 130;

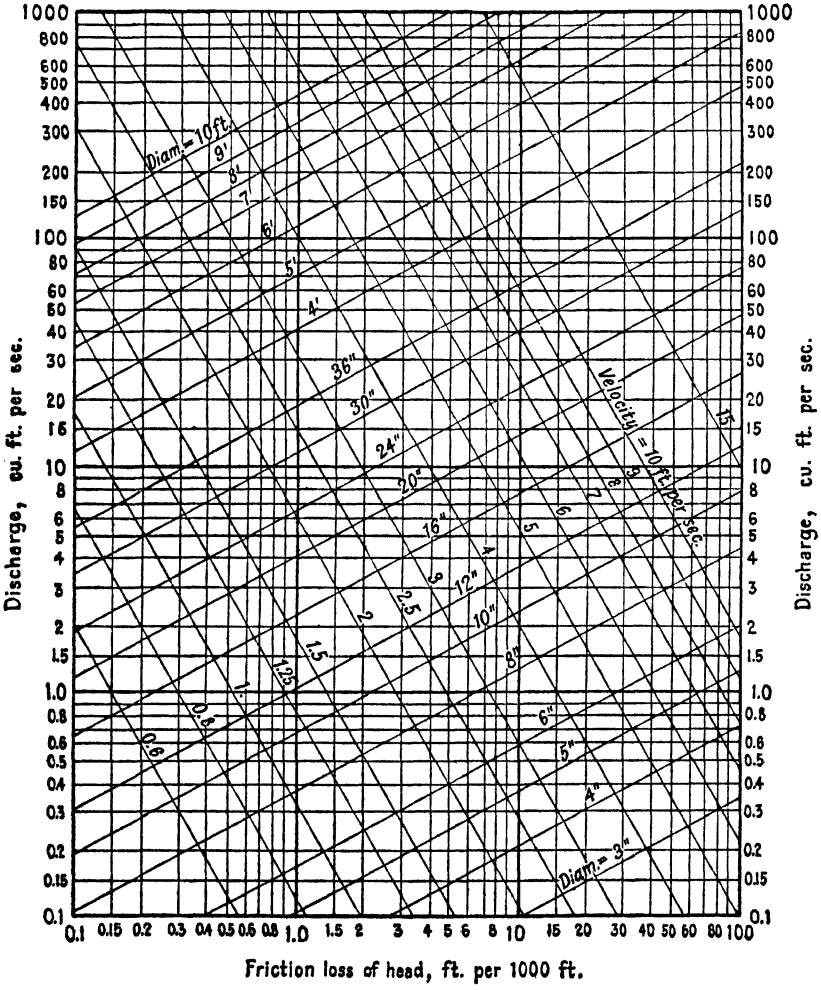

FIG. 15. Pipe flow, Hazen-Williams formula (*after Bleich*).

tuberculated pipe, 80 to 110; for DESIGN of cast-iron pipe lines, 100; new riveted-steel pipe, 110, ordinary wrought-iron pipe, 100; lead, brass, tin pipe, 140; smooth wood pipe, 120; vitrified pipe, 110; smooth clean masonry, 140; slime-coated masonry, 130; ordinary masonry, 120; brick sewers, 100. Application is much simplified by use of Fig. 15 (S. D. Bleich). The diagram is constructed for $C = 100$; for

any other value of C, multiply velocity and discharge by $c/100$. To SELECT PIPE to give discharge q, multiply q by $100/C$ giving q^1, and using this value find d from the diagram. To get ACTUAL VELOCITY, multiply the diagram value by $C/100$. For CHANNELS, multiply the hydraulic radius by 4 to get the equivalent diameter.

Example. Find the diameter of riveted-steel pipe to carry 40 cu. ft. per sec. with slope $s = 1.001$. $C = 110$. Multiply 40 by 100/110, then $q^1 = 36.36$ and $d = 46$ in. The corresponding velocity is 3.2, but since the actual discharge is 40, actual velocity is $3.2 \times 110/100 = 3.52$ ft. per sec.

Comparison of U. S. Reclamation Service and Hazen-Williams formulas. Fig. 15 is more conservative than Fig. 14, but the latter probably gives a closer indication of discharge of a pipe in fairly good condition. Hazen-Williams formula can be used for any class of pipe by choosing the proper value of C.

Compound pipe. A pipe line is to be made of sections of different diameters, the same discharge flowing through all; required to find the discharge.

Solution.

$$h = \frac{f_1 l_1 V_1^2}{2gd_1} + \frac{f_2 l_2 V_2^2}{2gd_2} + \frac{f_3 l_3 V_3^2}{2gd_3}$$

which shows that friction head for each section varies approximately as l/d^5. From this relation friction heads may be found by trial such that each section gives the same discharge. In Fig. 13 let the diameters be 16 in., 10 in., and 12 in., and the lengths 4,000 ft., 3,000 ft., and 3,000 ft., and let the total head be 120 ft. Friction heads for the sections vary as $4{,}000/16^5 : 3{,}000/10^5 : 3{,}000/12^5$, or as 3.8 : 30 : 12. Hence the respective heads are $120 \times 3.8/45.8$, $120 \times 30/45.8$, $120 \times 12/45.8$ or 9.95 ft., 78.6 ft., and 31.4 ft. Fig. 14 shows that each section will discharge 4.4 cu. ft. per sec. under these heads.

Branching pipe. To design branching pipe (Fig. 16) to discharge given amounts at C and D assume a pressure drop from A to B and design the section A–B for a discharge equal to the sum of those required at C and D. Then design sections B–C and B–D to give the desired discharge under their respective heads. If the diameter of any section is fixed, all pressure drops are fixed and no assumptions are necessary.

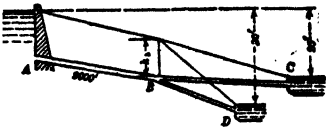

FIG. 16. Branching pipe.

Example. Find the diameters required to discharge 10 cu. ft. per sec. at C and 5 cu. ft. per sec. at D. Assuming a drop of 10 ft. from A to B, section A–B must discharge 15 cu. ft. per sec. under 10 ft. head or 5 ft. per 1,000 ft. From Fig. 14, d lies between 20 and 24 in. Assuming the latter, the drop is 6 ft., leaving heads on C and D of 14 and 24 ft. respectively. B–C is then between 16 and 20 in., and B–D between 10 and 12 in. It is best to select the larger diameters and control the discharge by gate valves.

To find the discharge from an existing pipe line, make a series of trials assuming different drops from A to B until one is found that gives a flow through A–B that equals the sum of those through B–C and B–D. If, in Fig. 16, the diameter of A–B is 30 in., B–C 24 in., and B–D 16 in., assuming 10-ft. drop from A to B, the discharges are: A–B, 33 cu. ft. per sec.; B–C, 20; and B–D, 14.

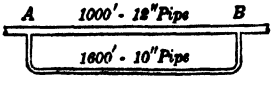

FIG. 17. Looped pipe.

Looped pipe (Fig. 17). Discharge from each branch is found from the fact that the pressure drop from A to B is the same in each.

Example. Find the pressure difference from A to B to give a flow of 5 cu. ft. per sec. and find the flow through each pipe.

For the same friction head, the discharge q varies as $(d^5/l)^{1/2}$, approximately. Hence the ratio of discharges is $(12^5/1{,}000)^{1/2} : (10^5/1{,}600) = 15.7 : 7.75$ or nearly 2 : 1, which gives values of 3.33 and 1.67 cu. ft. per sec. for the two branches. The corresponding lost heads are 6 and 5.8 ft. (Fig. 14). A head of 5.9 ft. will give discharges of 3.2 and 1.8 cu. ft. per sec., as required.

Pump pipe lines. The general problem is selection of pipe for the greatest economy. The pumping head is the sum of the static head and the friction head, the latter varying as d^5 for constant discharge.

Example. Let the pump supply a reservoir with 600 gal. per min. against a static head of 60 ft. through a pipe 2,400 ft. long. Valves and bends increase the equivalent length to 2,500 ft. Select the pipe.

$q = 1.335$ cu. ft. per sec. Head lost per 1,000 ft. is approximately 1, 2.5, 7.2, and 30 ft. for diameters of 12, 10, 8 and 6 in. respectively (Fig. 14). Pipes 6-in. or less diameter give too large friction loss. The total losses for 8-, 10- and 12-in. pipes are 17.5, 6.25, and 2.5 ft., to which the static head must be added to find the pump pressure. The most economical pipe will be the one for which the interest on first cost of pipe line plus the value of power lost in friction will be a minimum. A small change in diameter makes a large difference in friction head.

Pumping. Three cases are represented in Fig. 18. (*a*) The total head is the static head plus friction head and the net power required is $WH/550$ hp., where W = lb. pumped per sec. and H is total head. (*b*) The pumping head is the difference between the friction and static heads. The negative head at C should not be greater than 25 ft. Since the slope of the hydraulic gradient varies inversely as d^5 it is possible to control the pressure at C by a

proper selection of pipe diameter. (*c*) The pipe is arranged to eliminate negative head at *C*. The static head is the difference in elevation between *A* and *C* and the friction head is the pressure drop from *A* to *C*. Pipe *CB* is a conduit designed to carry the given discharge under head *h*. Its diameter is less than that of the line *AC*.

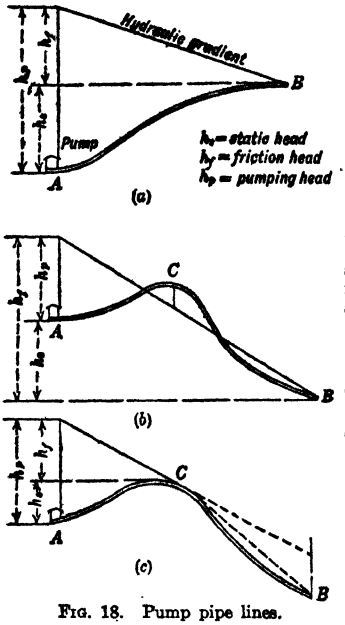

FIG. 18. Pump pipe lines.

Example. *AC* = 2,000 ft., *CB* = 4,000 ft.; elevation of *A* = 20 ft., *C* = 50 ft., *B* = 0. Find the power required to pump 4 cu. ft. per sec. through 12-in. pipe. (*b*) Fig. 14 gives *h* = 7.9 ft. per 1,000 ft. = 47.4 ft. Static head = −20 ft.; hence the pumping head = 27.4 ft. and hp. = 12.45 net. (*c*) If no negative pressure at *C* is permissible, the pumping head becomes 30 + (2 × 7.9) = 45.8 ft. and *CB* is designed to discharge 4 cu. ft. per sec. under a head of 50 ft. The diameter lies between 10 and 12 in.; hence the 12-in. pipe will run partly full. This can be avoided by partly closing a gate valve at *B*. Were the section *AC* made of 16-in. pipe, the friction head per 1,000 ft. becomes 1.9 ft., making the pumping head 33.8 ft., a saving of 26.6%.

Power delivered by a pipe is proportional to the product of the discharge and head at the delivery end. In Fig. 19, h_1 is a maximum when $q = 0$ and $h_1 = 0$ when q = maximum. Power varies as $q(h_1 + v^2/2g)$ and has a maximum value when one-third of the static head is consumed in friction. Usually the value of the power is such that the pipe line is designed to consume but 5 to 10% of the total head in friction. Selection of a proper pipe diameter is governed by the same factors that control in pump pipe lines. Fig. 20 shows relations between head, power, and discharge for pipe delivering power.



FIG. 19. Pipe with nozzle delivering power.

Example. Water under a total head of 1,000 ft. is brought to a 1,000-kw. Pelton wheel by a pipe 5,000 ft. long. The efficiency of the wheel is 85%. Design a pipe so that the friction loss shall be about 10% of the total head.

Assuming the head on the wheel = 900 ft., $q = 1{,}000 \times 550/(900 \times 62.5 \times 0.746 \times 0.85) = 15.5$ cu. ft. per sec. For cast-iron pipe in good condition, a 120-ft. head is required to discharge this quantity through 16-in. pipe and 40-ft. for 20-in. pipe (Fig. 14). 16-in. pipe will supply 16 cu. ft. per sec. with a loss of 125 ft. or 12.5%, which is the amount required to give 1,000 kw. under 875-ft. head, while 20-in. pipe will give the same power with a loss of 3.5%, the discharge being 14.5 cu. ft. per sec. After 10 to 15 yr. service the 20-in. pipe will maintain the required power with a loss of 6% and discharge of 15 cu. ft. per sec. (Fig. 15 with *C* = 100.)

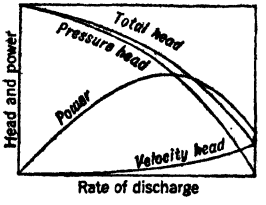

FIG. 20. Head in pipe and power delivered.

Water hammer or ram is the shock or blow produced by the dynamic action of water when the flow is suddenly checked by rapid closing of a valve or by other obstruction. The sudden decrease in velocity sets up a pressure wave which produces a maximum excess pressure of $p = 63v$ lb. per sq. in. where v = change in velocity or "extinguished" velocity; the SPEED OF PROPAGATION is about 4,500 ft. per sec. If the time of closing the valve exceeds 0.0004281 sec., $p = 0.0271v/t$. If the pressure wave enters a branch pipe with a dead end, the excess pressure may be increased two- or three-fold; a series of branches may build up a dangerous pressure.

When the velocity in a long pipe supplying power to a water wheel is suddenly checked a pressure wave is built up which travels back to the reservoir and, owing to the elasticity of water and pipe, forces water back, thus producing a wave of reduced pressure. The result is establishment of an oscillating wave with gradually decreasing amplitude and period depending on the length of pipe. Water hammer may be greatly reduced by the use of air chambers on pumps and of surge tanks on pipe lines supplying water wheels; automatic relief valves employing springs are not as good. Velocity should never be checked suddenly; hence the valves are designed to close slowly. Allowance should be made for water hammer in design of pipe.

Design of pipe. Determination of diameter usually involves selection of a standard size that will furnish the required discharge under given conditions. Diagrams for selection of diameter give as great accuracy as conditions warrant. The roughness factor is so uncertain that discrepancies of 10% or more between calculated and actual discharge may be expected.

Cast-iron pipe, owing to its great weight in proportion to strength is too costly for mill supply lines. The relatively short life of these lines does not justify paying for the extraordinary longevity of cast iron in such service.

Wrought-iron and steel lap- and butt-welded pipe are used for distribution of water, gas, and steam in sizes 1/8 in. to 15 in. nominal diameter and in three weights, standard full-weight, extra-strong, and double extra-strong. Special pipe for hydraulic machinery capable of withstanding internal pressure of 10,000 lb. per sq. in. is made by boring solid steel forgings. Most lap- and butt-welded pipe now on the market is mild steel but is often sold as wrought-iron. Large lap-welded steel pipe can be furnished in any diameter in thickness from 1/8 to 1 1/4 in. Forged flanges and connections are furnished in all sizes. Standard sizes are given in Table 20.

Table 20. Standard full-weight wrought-iron and steel pipe (*National Tube Co.*)

Diameter, inches			Nominal thickness, inches	Circumference, inches		Transverse areas, square inches			Length of pipe per square foot of		Length of pipe containing 1 cu. ft., feet	Nominal weight per foot, pounds	Number of threads per inch of screw
Nominal internal	Actual external	Approximate internal		External	Internal	External	Internal	Metal	External surface, feet	Internal surface, feet			
1/8	0.405	0.27	0.068	1.27	0.85	0.13	0.06	0.07	9.44	14.15	2,513.00	0.24	27
1/4	0.540	0.36	0.088	1.70	1.14	0.23	0.10	0.12	7.08	10.49	1,383.30	0.42	18
3/8	0.675	0.49	0.091	2.12	1.55	0.36	0.19	0.17	5.66	7.76	751.20	0.57	18
1/2	0.840	0.62	0.109	2.63	1.95	0.55	0.30	0.25	4.55	6.15	472.40	0.85	14
3/4	1.050	0.82	0.113	3.30	2.59	0.87	0.53	0.33	3.64	4.64	270.00	1.13	14
1	1.315	1.05	0.134	4.13	3.29	1.36	0.86	0.50	2.90	3.65	166.90	1.68	11 1/2
1 1/4	1.660	1.38	0.140	5.22	4.34	2.16	1.50	0.67	2.30	2.77	96.25	2.27	11 1/2
1 1/2	1.900	1.61	0.145	5.97	5.06	2.84	2.04	0.80	2.01	2.37	70.66	2.72	11 1/2
2	2.375	2.07	0.154	7.46	6.49	4.43	3.36	1.07	1.61	1.85	42.91	3.65	11 1/2
2 1/2	2.875	2.47	0.204	9.03	7.75	6.49	4.78	1.71	1.33	1.55	30.10	5.79	8
3	3.500	3.07	0.217	11.00	9.63	9.62	7.39	2.24	1.09	1.25	19.50	7.57	8
3 1/2	4.000	3.55	0.226	12.57	11.15	12.57	9.89	2.68	0.96	1.08	14.57	9.11	8
4	4.500	4.03	0.237	14.14	12.65	15.90	12.73	3.18	0.85	0.95	11.31	10.79	8
4 1/2	5.000	4.51	0.246	15.71	14.16	19.64	15.96	3.68	0.76	0.85	9.02	12.54	8
5	5.536	5.05	0.259	17.48	15.85	24.31	19.99	4.32	0.69	0.76	7.20	14.62	8
6	6.625	6.07	0.280	20.81	19.05	34.47	28.89	5.59	0.58	0.63	4.98	18.97	8
7	7.625	7.02	0.301	23.96	22.06	45.66	38.74	6.92	0.50	0.54	3.72	23.54	8
8	8.625	8.07	0.276	27.10	25.35	58.43	51.15	7.28	0.44	0.47	2.82	24.69	8
8	8.625	7.98	0.322	27.10	25.07	58.43	50.02	8.41	0.44	0.48	2.88	28.55	8
9	9.625	8.94	0.344	30.24	28.08	72.76	62.72	10.04	0.40	0.43	2.29	33.91	8
10	10.750	10.14	0.278	33.77	32.01	90.76	81.55	9.21	0.36	0.37	1.76	31.20	8
10	10.750	10.14	0.306	33.77	31.86	90.76	80.75	10.01	0.36	0.38	1.78	34.24	8
10	10.750	10.02	0.366	33.77	31.47	90.76	78.82	11.94	0.36	0.38	1.82	40.48	8
11	11.750	11.00	0.375	36.91	34.56	108.43	95.03	13.40	0.33	0.35	1.51	45.56	8
12	12.750	12.09	0.328	40.06	37.98	127.68	114.80	12.88	0.30	0.32	1.25	43.77	8
12	12.750	12.00	0.375	40.06	37.70	127.68	113.10	14.59	0.30	0.32	1.27	49.56	8
13	14.000	13.250	0.375	43.96	41.60	153.86	137.81	16.05	0.27	0.29	1.04	54.57	8
14	15.000	14.250	0.375	47.10	44.70	176.62	159.39	17.23	0.25	0.27	0.90	58.57	8
15	16.000	15.250	0.375	54.24	47.90	200.96	182.55	18.41	0.24	0.25	0.75	62.58	8

Welded steel pipe 13 in. diameter and over, and smaller, if light-weight, can be made in local shops or at the shops of larger mining companies, if bending rolls and welding equipment are available. Edges should be beveled; such joints are as strong as the sheet itself. In laying, it is common practice to weld 30-ft. lengths together on the ground, providing slip joints every 200–500 ft. Coefficient of expansion is 0.000084 in. per ft. per deg. F.

Flow through wrought-iron and steel pipe should be calculated for the actual internal diameter, which differs considerably from the nominal diameter. Small pipe is generally employed in short lengths with many elbows, valves, and other fittings; hence secondary losses of head play an important part. Table 21 gives dimensions of small sizes of standard full-weight pipe and the flow that may be expected for given pressures and equivalent lengths. (Williams and Hazen, *Hydraulic Tables*, Wiley.)

Table 21. Flow in small pipes

Wrought iron, inches		Discharge in U. S. gallons		Velocity, feet per second	Loss of head, feet, per 1,000 ft.		
Nominal size	Actual diameter	Per minute	Per 24 hr.		Smooth new iron, $C = 120$	Ordinary iron, $C = 100$	Old iron, $C = 80$
1/8	0.270	0.2	288	1.12	44	62	94
		0.4	576	2.24	158	220	335
		0.6	864	3.36	335	470	710
		0.8	1,152	4.48	570	800	1,210
		1.0	1,440	5.60	860	1,210	1,830
1/4	0.364	0.5	720	1.54	56	78	118
		1.0	1,440	3.08	200	280	430
		1.5	2,160	4.62	425	600	910
		2.0	2,880	6.16	730	1,030	1,550
1/2	0.623	2.0	2,880	2.10	53	74	112
		4.0	5,760	4.21	192	270	410
		6.0	8,640	6.31	410	570	870
		8.0	11,520	8.42	700	980	1,480
		10.0	14,400	10.52	1,050	1,470	2,230
3/4	0.824	2	2,880	1.20	14	19	29
		4	5,760	2.41	50	70	105
		6	8,640	3.61	105	147	224
		8	11,520	4.81	180	250	380
		10	14,400	6.02	271	380	580
		12	17,280	7.22	380	530	800
		15	21,600	9.02	570	800	1,220
		20	28,800	12.03	970	1,360	2,060
1	1.048	5	7,200	1.86	23.2	32.5	49.1
		10	14,400	3.72	84	117	177
		15	21,600	5.58	178	246	378
		20	28,800	7.44	301	420	640
		25	36,000	9.30	455	640	960
		30	43,200	11.15	640	890	1,350
		35	50,400	13.02	850	1,190	1,800
		40	57,600	14.88	1,090	1,520	2,300
1 1/4	1.380	5	7,200	1.07	6	8.4	12.7
		10	14,400	2.14	21.8	30.5	46
		20	28,800	4.29	79	111	168
		25	36,000	5.36	119	166	251
		30	43,200	6.43	169	235	358
		35	50,400	7.51	223	312	470
		40	57,600	8.58	285	400	610
		50	72,000	10.72	432	600	920
		60	86,400	12.87	610	850	1,290
		70	100,800	15.01	810	1,130	1,700
		80	115,200	17.16	1,030	1,450	2,200
1 1/2	1.611	10	14,400	1.57	10.2	14.3	21.7
		20	28,800	3.15	37	52	78
		30	43,200	4.72	78	110	166
		40	57,600	6.30	133	188	281
		50	72,000	7.87	202	284	428
		60	86,400	9.44	281	396	600
		70	100,800	11.02	376	530	800
		80	115,200	12.59	480	680	1,020
		90	129,600	14.17	600	840	1,260
		100	144,000	15.74	730	1,020	1,540
		110	158,400	17.31	870	1,220	1,840
		120	172,800	18.90	1,020	1,430	2,170
2	2.0	20	28,800	2.04	12.9	18.2	27.5
		40	57,600	4.08	46.8	66	99
		60	86,400	6.13	99	139	210
		80	115,200	8.17	169	237	258
		100	144,000	10.21	256	358	540
		120	172,800	12.25	360	500	760
		140	201,600	14.30	479	670	1,020
		160	230,400	16.34	610	860	1,290
		180	259,200	18.38	760	1,070	1,620
		200	288,000	20.42	920	1,290	1,960
		220	316,000	22.47	1,110	1,540	2,340

Riveted-steel pipe has been rendered substantially obsolete by modern advances in welding.

Wood-stave pipe, consisting of staves of cypress, white pine, fir, or redwood, banded together with steel bands, is much used where lumber is cheap and steel and concrete relatively expensive. It is suitable for diameters of 16 in. to 20 ft. and, with normal banding, for pressure heads up to 100 ft. With special banding, 3-ft. pipe is good for heads up to 400 ft., 4-ft. to 350 ft., 5-ft. to 290 ft., and 6-ft. to 240 ft. The pressure should be sufficient to keep the wood saturated. CONTINUOUS WOOD-STAVE PIPE is built in place, the lower half being assembled in a cradle and the upper half assembled over a pipe ring. Staves break joints, and end connections are made watertight by the use of a steel tongue which fits into saw kerfs in each stave. Bands are not tightened until the wood is thoroughly saturated. STAVES are from 1 1/4 to 2 1/2 in. thick and 6 to 8 in. wide. They are cut with true cylindrical surfaces and radial edges. They are bundled for shipment in 10-, 20-, and 24-ft. lengths. BANDS are 3/8 to 3/4 in. diameter and are designed and spaced to carry total hoop tension due to pressure in addition to swelling pressure of the wood. This latter may be assumed at 100 lb. per sq. in. Table 22 gives data on continuous-stave pipe.

Table 22. Continuous wood-stave pipe; untreated fir

Inside diam., ft.	Staves, thickness, in.	Bands, diam., in. *a*	Lumber for staves and saddles, bd. ft. per 100 lin. ft. of pipe	Weight per ft., lb.		Price, $ per ft., f.o.b. Vancouver, B. C. (1938)	Erection cost per ft., cents (estimated)
				Lumber	Iron		
3 1/2	1 1/2	1/2	1,875	75	13.5	2.55	35
4	1 5/8	1/2	2,309	95	19	3.10	40
4 1/2	1 7/8	5/8	3,030	124.5	25	3.95	45
5	2 1/8	5/8	4,062	165	32.5	5.10	50
6	2 3/4	3/4	5,500	215	36	6.60	60

a Band for 100-ft. head.

MACHINE-BANDED PIPE is cut and banded in the shop and pipe lengths are joined with standard cast-iron or special fittings. Staves are made with tongues and grooves, and banding is a continuous wire wound on under high tension. Flat bands are also used. It is available in inside diameters of 3 to 18 in., lengths of 6 to 20 ft., for heads up to 400 ft.

ADVANTAGES of wood-stave pipe are ease of transport, easy curves to radii of 60 pipe diameters made without special fittings, high carrying capacity, relative cheapness, and good durability (15 to 20 yr. for untreated fir). Kutter, $n = 0.009$ to 0.011; Hazen-Williams, $C = 120$.

NEVADA CONS. mill, at McGill, Nev., receives most of its water by gravity from a reservoir on Duck Creek, 9.5 mi. away and 105 ft. higher than the receiving tank at the mill, through a 32-in. pipe of which 40,000 ft. was laid with Douglas fir staves and 1/2-in. round bands; sills were spaced at 3 ft. (*109 J 857*). The total first cost (1907), including 10,000 ft. of 32-in. riveted-steel pipe in the line, was $180,000, or $4 per ft. Flow capacity, 20 to 21 cu. ft. per sec. In 1920, the ends of the staves were found to be rotted; repairs were made by enclosing the affected portions of the pipe in concrete jackets, about 6 in. thick and reinforced with small rods; the total length thus repaired was 1,500 ft. This line was still in use early in 1924 and was expected to last 2 yr. longer (*C. B. Lakenan, PC*).

Reinforced-concrete pipe comes pre-formed in diameters of 2 to 10 ft. and lengths of 3 to 5 ft. Large diameters are generally poured in place. The pipe is usually reinforced longitudinally with steel bars and transversely with spiral wire, wire mesh, or steel bands, to resist the total hoop tension. When the pipe is not poured in place, longitudinal reinforcement is designed to provide interlocking of adjacent sections so that when the cement joint is made a continuous pipe results. Reinforced-concrete pipe is usually employed for conduits and for pipe under low heads, although reinforcement can be designed for any desired pressure. THICKNESS OF CONCRETE averages 1 in., per ft. of diameter, being slightly greater for small sizes.

Open channels include flumes, conduits, canals, rivers, and closed pipes when the latter flow partly full. FRICTION HEAD appears as a drop in water surface, not as a loss of pressure; the drop in a given length is just equal to the head required to produce flow through that length. The condition is analogous to that of a pipe line laid on its hydraulic gradient. Flow in existing channels is measured directly when possible; in designing channels and in determining flow where direct measurement is impracticable the Chezy formula $v =$

$C\sqrt{RS}$ is used. Values of C for a wide range of conditions are given in KUTTER'S FORMULA,

$$C = \frac{41.6 + \left(\frac{0.0028}{S}\right) + \left(\frac{1.81}{n}\right)}{1 + \left(41.6 + \frac{0.0028}{S}\right)\left(\frac{n}{\sqrt{R}}\right)}$$

and BAZIN'S FORMULA,

$$C = \frac{158}{1 + N/\sqrt{R}}$$

Values of C depend in both cases on the roughness of the channel and on the hydraulic radius R; Kutter also introduces the slope S. His formula is most used in this country.

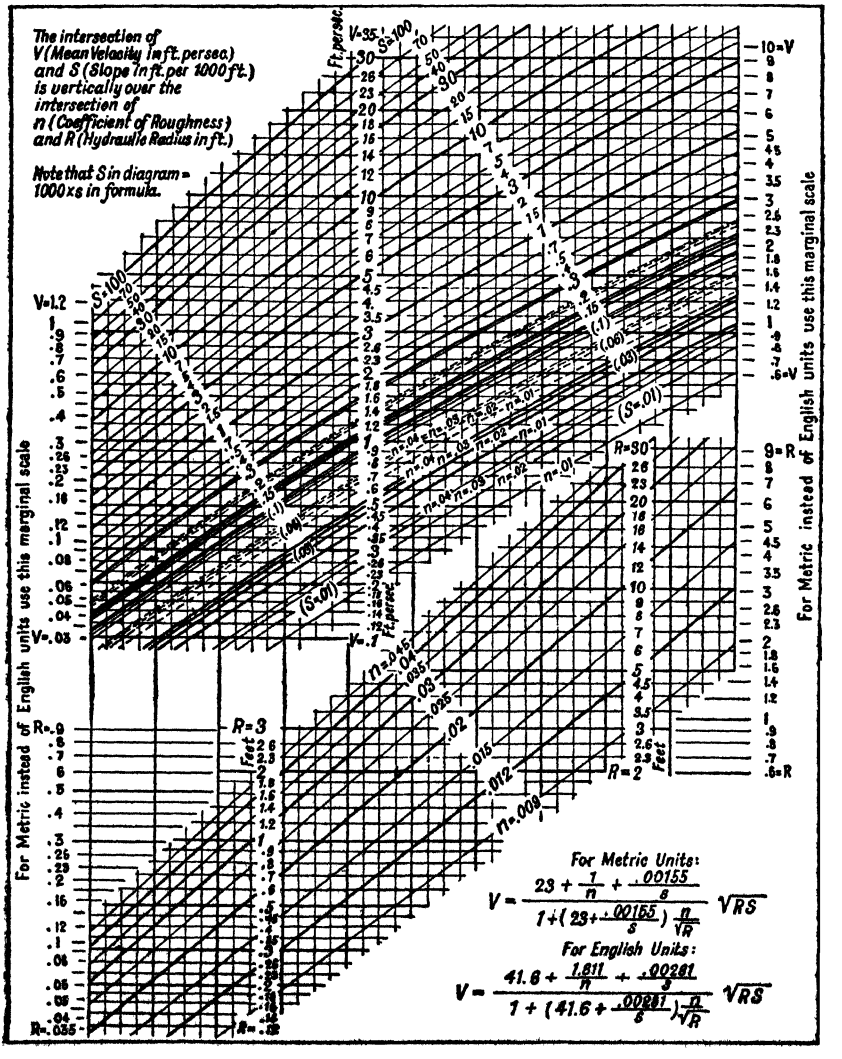

FIG. 21. Diagram for Kutter formula (*after Kennison*).

Value of coefficient of roughness in Kutter and Bazin formulas

	Kutter, n	Bazin, N
Channels of uniform section		
Well-planed timber, evenly laid	0.009	
Neat cement; best pipe	0.010	0.11
Cement, one-third sand; smooth pipe	0.011	
Unplaned timber; ordinary pipe	0.012	
Ashlar; brick work; new sewer pipe	0.013	0.29
Ordinary brick work and sewers; foul pipe	0.015	
Rubble masonry; rough concrete	0.017	0.83
Channels of non-uniform section		
Canals in firm gravel, section nearly uniform	0.02	1.54
Earth canals and rivers free from large stones and weeds	0.025	2.35
Canals and rivers in bad order	0.03–0.04	3.2

Limitations of Kutter's formula. Since the formula was designed to cover a wide range of conditions, considerable error is to be expected. For hydraulic radii greater than 10 ft., for velocities greater than 10 ft. per sec., and for slopes less than 0.0001, the formula should be used with caution. If the slope exceeds 0.001, the value of C for $S = 0.001$ may be used with an error less than the probable error from the formula. Great refinement is unnecessary since an error of 0.001 in the selection of the roughness coefficient n may change C 5 to 17%. The value of the formula depends largely on the proper selection of coefficient n; for smooth flumes and conduits, cleaned periodically, an error of 5% is to be expected; for canals and rivers in bad order, the formula is but a rough approximation.

Open-channel flow diagrams greatly facilitate the use of Kutter's complicated formula. Tables are also prepared giving values of C for all values of R, S, and n found in ordinary practice. One of the best diagrams, prepared by Kennison, is given by Fig. 21.

To find velocity when the hydraulic radius, slope, and roughness coefficient are known, enter the lower part of the diagram on the horizontal line representing the value of R, follow this line to the intersection with the given value of n, thence vertically to intersection with the assigned slope line; a horizontal line through this latter intersection determines the velocity.

Example 1. Given $R = 3$ ft., $n = 0.015$, $S = 0.0005$, find velocity. Enter at $R = 3$, proceed to intersection with $n = 0.015$. Project vertically from this point to line $S = 0.0005$ (marked 0.5). This point is on the horizontal line $v = 4.7$, which is the result required.

Example 2. An unplaned timber flume 2 ft. wide and 1 ft. deep is required to supply 10 cu. ft. per sec. What slope is necessary? $v = q/a = 5$ ft. per sec. $R = 2/4 = 0.5$ ft.; n for unplaned timber = 0.012. Vertical from intersection of $R = 0.5$ and $n = 0.012$ intersects line $v = 5$ on line $S = 0.006$ (marked 6) which is the necessary slope. For small values of S, as 0.00001, the position of the line representing S varies with the value of n.

Design of open channels. The Chezy formula shows that velocity increases as R increases. The constant C also increases with R, so that v varies nearly as $R^{2/3}$. Hence for a given discharge, that cross-section should be used which makes R maximum. This condition also makes the perimeter and area of the channel a minimum. A SEMICIRCLE meets these requirements; hence a semicircular channel will discharge more water than any other form for given values of area, slope, and degree of roughness.

Fig. 22 shows the channels having the most advantageous elements. The depth of a RECTANGULAR FLUME should be one-half the breadth. This gives the least value of perimeter p, hence the least cost

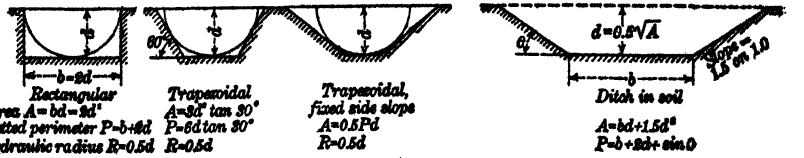

FIG. 22. Best cross-sections for channels.

for the flume and also the least area for given discharge, hence the least cost for excavation. The best TRAPEZOIDAL SECTION is one-half hexagon. If the side slopes are fixed by the nature of the soil, they should be tangent to a circle of radius d as in Fig. 22. The foregoing sections are not used for UNLINED DITCHES because a shallow ditch is cheaper to dig and maintain. AVERAGE DEPTH is $d = 0.5\sqrt{A}$, where d = depth in ft, and A = area in sq. ft. SIDE SLOPES depend on the material; usual values are 1 : 1, 1.5 : 1, and 2 : 1. For average loam use 1.5 : 1 (Fig. 22).

Velocity of water should be great enough to prevent deposits of silt and growth of weeds but should not be sufficient to erode the bottom of the channel; 2 ft. per sec. will prevent deposits. The following values of mean velocity are safe against erosion (*Peele*):

Very light loose sand	1.0 –1.5	Conglomerate, cemented gravel, soft rock	6.0– 8.0
Average sandy soil	2.0 –2.5	Hard rock	10.0–15.0
Average loam or alluvial soil	2.75–3.0	Concrete, water carrying coarse sand.	7.0–12.0
Stiff clay or ordinary gravel	4.0 –5.0	Concrete, water carrying fine sand	15.0–20.0
Coarse gravel, cobbles	5.0 –6.0		

The usual velocity for ditches is 2 to 3 ft. per sec., which requires a slope of 3 to 7 ft. per mi. If the available slope is greater than this, the ditch must be lined or else a series of vertical drops introduced. These drops may be wooden or concrete weirs or ramps. The ROUGHNESS COEFFICIENT for unlined earth ditches is usually taken $n = 0.0025$.

Seepage losses in earth ditches may be as high as 25%; they may be reduced or almost eliminated by linings, which also permit greater velocity and prevent weed growth. LININGS may be puddled clay, road asphalt, or 2 to 4 in. of concrete, placed in position without forms on slopes 1 : 1 or less. Concrete practically eliminates seepage.

Freezing may occur in conduits if the flow of water is reduced below some minimum velocity, dependent upon the temperature. Radiation, particularly in a pipe, is not enough to cause freezing of running water, except in very small pipes or where velocity is very low.

Uniform cross-section is desirable; any change in section causes loss of head by impact and reduces flow. A smooth channel with small changes in section should be regarded as a rough channel in selecting a coefficient of roughness.

Example 1. Design an unplaned timber flume to deliver 20 cu. ft. per sec. with a slope of 0.001.

For the most economical section, $b = 2d$, $A = 2d^2$, $R = 0.5d$, $n = 0.012$. Use Fig. 21 with trial values of d; for values of $d = 1.5$, 1.6, and 1.7 the velocities are 3.3, 3.5, 3.6, giving discharges of 15, 17.8, and 20.8 cu. ft. per sec. Therefore a flume 17 × 34 in. will give the desired flow.

Example 2. Design a ditch in average soil with end slopes 1.5 : 1 to discharge 100 cu. ft. per sec.

Assuming safe velocity = 2.5 ft. per sec., the area must be 40 sq. ft. $d = 0.5\sqrt{A}$, = 3.2 ft.; $A = bd + 1.5d^2$; hence $b = 7.7$ ft. Wetted perimeter $P = b(2d/\sin\theta) = 19.16$ ft. $R = A/p = 2.09$ ft. Required slope (Fig. 21) is $S = 0.0007$ or 3.7 ft. per mi.

Surge tank should be provided where a ditch or flume feeds a pipe line. Overflow from this tank, as well as from any spillway along the pipe line, should be led away so as not to undermine pipe-line supports or erode roads.

3. SITUATION OF MILL WITH RESPECT TO TAILING DISPOSAL

General considerations. Waste from a milling operation must be disposed of, if the plant is not to bog down in its own refuse. The bulk to be cared for may almost equal that of the new feed. Legal penalties usually prohibit simple discharge at the mercy of gravity, even where a convenient lake, hillside, or flat is available. As a result, the disposal problem is not infrequently a deciding factor in mill location, particularly when the plant is a large one, serving a mine with assured long life, such as UTAH COPPER, or MIAMI. The tailing discharged by UTAH COPPER in one year, at 50,000 tons daily plant capacity, would cover 200 acres to a depth of 50 ft. (assuming 80 lb. solid per cu. ft. of deposited tailing).

The first question to be decided in a tailing-disposal problem is whether the tailing has probable future value by reason of mineral content, or possible use as a more or less comminuted nonmetallic, *e.g.*, road ballast, concrete aggregate, sand, or filler. If it has, it should be impounded in such a way as to make rehandling as easy and cheap as is consistent with costs of impounding; materials of different characters should be segregated, *e.g.*, coarse from fine, or high-grade from low-grade; and loss by wind and water should be guarded against.

If final immediate disposal is indicated, and unrestricted gravity disposal is not available, a variety of factors enter the problem, *viz.*: (*a*) Maximum economy requires gravity flow to destination; (*b*) gravity disposal uses water as a carrier and not all of this can be recovered; (*c*) mechanical elevation of tailing and the accompanying water may be a necessary preliminary to gravity disposal; mechanical stacking of dewatered sand tailing is an alternative; (*d*) areas of land may have to be acquired solely for tailing disposal; (*e*) special precautions may need to be taken against pollution of streams by soluble or suspended matter; (*f*) special haulage facilities may be needed; (*g*) in a few cases, the tailing has enough present market value to become a source of revenue, or at least to pay for disposal.

Direct loading into cars is a common method of disposing of coarse waste, especially that produced by hand sorting or by dry methods of concentration, as in LAKE SUPERIOR

"rock houses," WISCONSIN zinc mills, coal washers, magnetic iron concentrators, and sink-float plants. At wet-concentrating mills, the advantage of this method, even where gravity disposal is utilized for finer tailing, is that it avoids waste of the large volume of water that would be required to flush coarse material down a flume.

Former practice in SOUTHEASTERN MISSOURI was to dewater sand tailing in an elevated tank from which the settled product passed through spigots into cars drawn to a dump by locomotive. This plan is now obsolete, but in modified form (tailing mechanically dewatered before transfer to a bin) is still practiced in some places. At BUNKER HILL & SULLIVAN, sand tailing is occasionally diverted from an elevated gravity flume into railroad cars and hauled away for ballast. Tailing from the leaching vats at NEW CORNELIA is loaded by truss excavator into the same cars that bring the crushed, raw ore to the plant. Unusual circumstances at the MOCTEZUMA mill formerly required conveyance of deslimed sand tailing across a gulch by aerial tram; later the flotation tailing was flowed by gravity to settling ponds.

Gravity flushing of wet tailing of medium to fine size is always adopted if conditions permit; the method may require assistance of mechanical elevators, and is frequently employed in such a manner as to permit recovery of water. Design of a tailing launder requires special attention because: (*a*) it is usually longer than any launder inside a mill and, if given a grade steeper than is actually necessary, will sacrifice an undue amount of available head; (*b*) it carries a larger volume than individual mill launders and should be designed to do this without the addition of valuable water for flushing; (*c*) abrasion, while no more severe than in mill launders conveying the same material, demands more extensive renewals; linings should therefore be specifically designed for durability and ultimate economy.

Velocity of flow required for transportation of tailing in rectangular flumes depends on the size of the grains, their specific gravity, and, to a lesser extent, on the dilution of the pulp.

Mill tailing is usually siliceous (sp.gr., 2.6) and contains about 25% solids; on this basis safe velocities are given in Table 23.

Table 23. Velocities in tailing launders

Size of grain; all through:		Velocity required, ft. per sec.
Mesh	Mm.	
200	0.074	3.37
100	0.147	3.8
48	0.295	4.5
20	0.833	6.0
8	2.362	7.8
3	6.680	10.0
2	9.423	11.5

Table 24, calculated by Kutter's formula (Fig. 21), using $n = 0.015$, gives velocities for various sizes of straight launders, at slopes ranging from 5 to 50 per 1,000. For unplaned lumber lining in good condition ($n = 0.012$), the listed velocities should be increased by

Table 24. Launder velocities by Kutter's formula ($n = 0.015$)

Launder dimensions, width × depth, in.	"Mean radius" (R), ft.	Feet per second for slopes in in. per ft. indicated below					
		1/16	1/8	1/4	3/8	1/2	5/8
8 × 2	0.111	1.5	2.00	2.65	3.1	3.6	4.00
12 × 3	0.167	2.00	2.8	3.9	4.75	5.4	6.00
18 × 4 1/2	0.25	2.7	3.75	5.1	6.3	7.2	8.00
24 × 6	0.33	3.25	4.7	6.4	7.9	9.0	10.15
30 × 7 1/2	0.415	3.9	5.4	7.5	9.4	10.7	12.0
36 × 9	0.50	4.5	6.25	8.75	11.0	12.4	14.0
42 × 10 1/2	0.584	5.1	7.25	10.0	12.6	14.3	16.0
48 × 12	0.666	5.7	7.75	11.1	13.75	15.7	17.5
54 × 13 1/2	0.75	6.6	8.6	12.0	14.7	17.0	19.0
60 × 15	0.833	6.5	9.2	12.8	15.7	18.75	20.25
66 × 18	0.92	7.0	9.75	13.75	17.0	19.5	21.7
72 × 18	1.00	7.5	10.25	14.5	18.0	20.6	23.0

25%. For rough lining ($n = 0.02$), multiply the tabular velocities by 0.7. Curves and turns and different specific gravities will require further modification of the tabular values. (See also Art. 6, and Sec. 18, Art. 16.)

Lining. At BUNKER HILL & SULLIVAN the sides of a wooden tailing launder, 24 in. wide, are lined with concrete slabs, 1 ft. square and 1.5 in. thick, or white-iron plates of the same size, 1 in. thick, or with discarded elevator belt with the rubber-protected side against the walls. The bottom is riffled transversely, at 24-in. intervals, with 3/4-in. white-iron strips 6 in. wide, standing on edge; sand resting between the cleats prevents wear on the bottom (*S. A. Easton, PC; 120 P 586*). The slope is 3/8 in. per ft. At UNITED EASTERN, fine-crushed cyanide tailing (46% water) is distributed by gravity through 6-in. slip-jointed iron pipe laid with 3° (5/8 in. per ft.) minimum slope.

Impounding of tailing has three purposes: (*a*) to save the solid for future treatment; (*b*) to give opportunity for settling and recovering water; (*c*) to avoid pollution of streams. Tailing ponds may be formed by excavation in earth, by concrete dams, or, more commonly, by dams formed from the tailing itself. Impounding dams are frequently used to catch the water remaining in the thickened product of mechanical dewaterers.

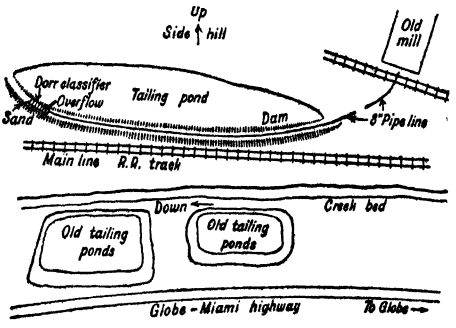

Fig. 23. Plan of tailing dam, Old Dominion.

Tailing dams. To build a stable dam with maximum slope of face requires that most of the slimes be removed before the sands are placed. The slime is then deposited separately behind the sands, and fills the pores therein in such a way as to maintain stability.

Most tailing dams are built from a launder or pipe supported on trestles close to the line of the face of the dam. The bottom of this launder or pipe is provided with metal-bushed holes at regular intervals (5–10 ft.) through which the roughly classified coarsest sands, which travel on the bottom, drop, while the fine sands and slimes flow on to the end and are led through a lateral launder or spout back from the face and toward the central pool. Further desliming takes place as the discharged sands pile up. Cleaner sand may be obtained by hanging small conical-pocket classifiers from the main launder. Occasionally rake, drag, or screw classifiers, traveling on a track on the dam, are used for desliming; or the separation may be made in the mill, sending sand to a stacker belt and delivering slimes only to the pond. In such event the retaining dam must be provided independently.

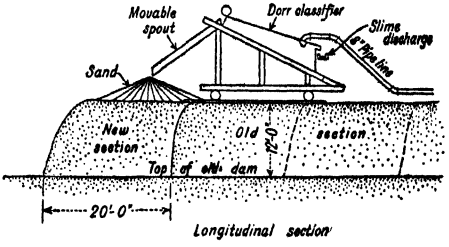

Fig. 24. Old Dominion method of building tailing dam.

At Old Dominion, 700 tons per day of <48-m. flotation tailing, 56% <200-m., in a pulp containing 20 to 25% solids, was flowed by gravity through 8-in. steel pipe 1,600 to 3,600 ft. at any convenient grade (50 ft. available fall) to a Dorr duplex classifier at the face of the tailing dam (Fig. 23). The classifier was mounted with its motor on a truck and was periodically moved ahead on a 20-ft. section of track, a corresponding length of pipe being provided. Sands, constituting about one-third of the solids, were deposited as shown in Fig. 24, forming a long narrow dam on a hillside; slimes discharged sideways into the pond. The dam section, shown under construction, was 12 ft. high and 12 ft. wide at the top, with side slopes of 45°. When a 12-ft. layer was completed to the limit of its width (200 ft.), another layer was started on top. Maximum height was 30 ft. above ground. One man attended the classifier and shaped the dam. The cost, 2 1/2¢ per ton, was relatively high because of the long narrow pond. Water was carried through the dam by a wooden standpipe.

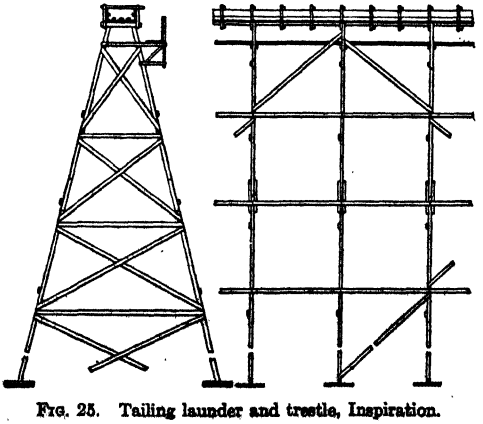

Fig. 25. Tailing launder and trestle, Inspiration.

At Inspiration, 14,200 tons per day of table and flotation tailing (94% <48-m. and 52% <200-m.), carrying 22.6% solids, was disposed of entirely by gravity. About 50% of the total circulating water, amounting to 4,600 g.p.m., was recovered just outside the mill by sending all table tailing plus part of the flotation tailing to a system comprising sloughing-off tanks with overflow to Dorr thickeners. The thickened products, plus the unthickened portion of flotation tailing, averaged 31.5% solids. This flowed by open launder 3,000 ft. to the nearest corner of the tailing dam, roughly square

in plan, thence by one of two elevated launders (Fig. 25), each about 5,000 ft. long, for distribution around the perimeter. Launders were 4 ft. wide, 2 ft. deep, of 2-in. plank with battened joints, at uniform grade of 14 in. per 100 ft. Collars at 3-ft. intervals were of 4 × 6-in. sill and 2 × 4-in. posts and cap. The trestle (Fig. 25) ranged from 30 to 70 ft. high. Bents were spaced 12 ft. For bents up to 50 ft. the legs and caps were 4 × 6-in., battered 3 in 12, transversely braced in 12-ft. panels with 2 × 6-in. cross braces. For higher bents, the posts were increased 50 to 100% in section. A walkway 2 ft. wide with handrail was carried at one side of the flume Longitudinal bracing was effected by means of purlins spaced 12 ft. and slant bracing as shown in Fig. 25. The total load was 750 lb. per linear ft. Total lumber for a 30-ft. trestle was 900 bd. ft. per 12-ft. section.

Sand was deslimed in automatic cones (Fig. 26) 15 1/2-in inside diameter at the top, 2-in. diameter at the bottom, and about 3 ft. 2 in. deep, made of No 20 galvanized sheet. The cone was suspended by straps from counterweighted levers *a*. The valve rod *b* was fixed in position so that when the cone was filled with pulp at low density the valve closed. As sand collected and the weight of the cone increased, it dropped somewhat and the valve opened, discharging thickened sand

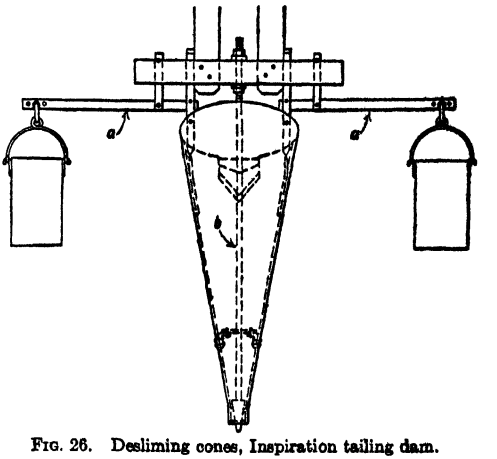

FIG. 26. Desliming cones, Inspiration tailing dam.

The cones were spaced at 12-ft. centers along the trestle. They were fed through 3/4-in. pipes inserted through the side of the flume. Sand and slime were discharged through short spouts, the former to a marginal pile and the latter to the enclosed pond. (See Fig. 27.) Of 400 cones installed, 250 were in use at a time; one man per shift watched 80 cones and 1,000 ft. of flume. Other labor included a boss and three men per shift. Wet sand settled to a slope of 1 1/2 to 1. The marginal pile was raised to a height of 40 ft., with a top width of 12 ft. When the enclosed area was filled with slime, a new trestle was erected on top and about 80 ft. back from the edge of the preceding pile; the resulting terraces were necessary to prevent leakage. In Feb. 1923 the fourth marginal pile had reached 126 ft. above the lowest point of ground; lower ponds were then started, as no higher level could be reached without pumping. Table 25 gives costs. Prior to 1920, about the same annual tonnage was distributed to four smaller ponds at costs ranging from 2.65¢ to 3.71¢ per ton. Water recovery was about 50%. Triplex pumps delivered the overflow of the thickeners against a head of 125 ft. with power consumption of 0.80 kw.-hr. per 1,000 gal. at a total cost of 1.25¢ per 1,000 gal. Water from the pond was returned by centrifugal pumps against a head of 280 ft., with consumption of 3.23 kw.-hr. per 1,000 gal. at a total cost of 5¢ per 1,000 gal.

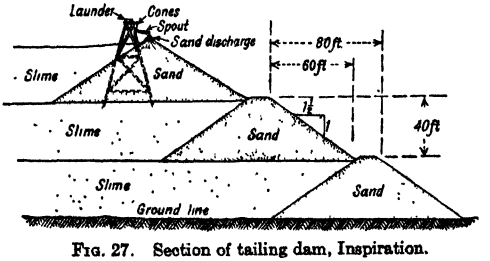

FIG. 27. Section of tailing dam, Inspiration.

At MIAMI, the procedure when discharging 7,000 tons of flotation tailing daily, 98% <48- and 55% <200-m., in a pulp containing 27% solids (approximately 3,300 g.p.m.), was as follows: The material flowed by gravity through 4,000 ft. of 18-in. redwood stave pipe under a head of 26 ft. to a penstock. Velocity in the pipe was low enough to allow sand to settle along the bottom and protect it from wear. The pipe was laid on the ground, at no special grade (at one point passing over a low hill). It was carried across the slime pond on a trestle. When necessary to raise this trestle, sand was allowed to flow through holes in the bottom of the pipe, forming a ridge across the middle of the pond. From the penstock two launders extended, one for 2,400 ft. and one for 1,600 ft., along the face of the dam in opposite directions. The launders were V-shaped, with 24-in. sides, made of 2-in. plank, set on a grade of 1/8 to 3/16 in. per ft. and had V-notches to the full depth on the dam side at 20-ft. intervals.

Table 25. Cost of tailing disposal at Inspiration mill (cents per dry ton)

Year	Tons solid	Launders and trestles	Drain	Operating labor	Miscel.	Total
1920	4,943,000	0.488	0.168	0.490	0.224	1.370
1921	884,950	1.420	0.463	0.539	0.168	2.690
1922	3,534,000	1.120	0.090	0.550	0.460	2.220
1923	4,957,730	1.620	0.100	0.570	0.120	2.410

They were supported on a trestle (Fig. 28) 30 to 60 ft. high, 25 ft. back from the outer edge of the dam. The bents, 10 ft. apart, were made of 4 × 4-in. posts and 2 × 4-in. braces. The entire flow in each launder was discharged through its lowest notch, and directed toward the face of the dam by an apron 9 ft. long, 4 ft. wide, and 1 ft. deep, made of 1-in. boards. The sands settled on the bank, while slime flowed inward toward the pond. When the sands had accumulated to a depth of 6 ft., the next higher notch was opened, and the process was repeated until a 6-ft. layer had been deposited back to the penstock. This part of the operation required one man per shift, with another man and a foreman on day shift, or five men per day. A dam 6 ft. high was next formed along the outer edge of the pile by an American railway ditcher operated by three men. It required 45 days (one shift) to complete a dam along the whole length of the tailing pile. The outer face of this dam, sloping 1 1/2 to 1, was continuous with the general outer slope of the whole pile; no terracing was necessary. One 6-ft. dam provided retaining space for 6 months, or 1,250,000 tons. The highest point of the dam (early 1924) was 200 ft. above ground. Wood chips, collected on screens attached to Dorr classifiers in the mill and amounting to 3 or 4 tons (dry) per day, were spread loosely in a 3-in. layer over the outer slope of the pile to alleviate nuisance from blowing dust. The cost of gravity disposal (1923), including trestle and launder building, ditcher operation, labor, and maintenance, was 1.61¢ per ton; the additional cost of collecting, transporting, and spreading wood chips was 0.75¢ per ton of tailing.

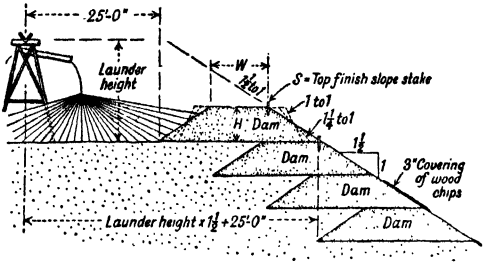

W = finished width of top when dry. H = height of dam for stacking dry sand. For stacking wet sand for finished top width W, place stake at S; for semi-wet sand move slope stakes in $H/4$ from S.

FIG. 28. Section of tailing dam, Miami Copper Co.

In 1937, 17,000 tons per day was first thickened to 52% solids in a 325-ft. thickener just below the mill, then pumped against 80-ft. head through 18-in. wood-stave pipe 16,000 ft. to a dam. Here the pulp was diluted with dam water to 40% solids, and sands discharged through gate valves spaced 40 ft., one at a time. The deposited sands were then built up into a border crest, 6 to 9 ft. high, with a power shovel.

UTAH COPPER Co. (1938) discards 50,000 tons per day, of which 85% is <200-m. The disposal area is a tract of 6,300 acres, comprising a gently sloping foothill and a swampy flat. Available fall below the mill outlet is 120 ft. A dike 35 ft. high, 25 ft. wide at the top, 8.3 mi. long, at approximately 13,300 ft. from the mills, prevents encroachment on the main line of the Union Pacific R. R. This dike was built with mine waste. Pulp carrying 20 to 25% solids is discharged at one point well up on the hill and fans out, depositing solids, while clear water collects behind the dike, whence it is drawn through sluice gates into a parallel gathering ditch. An area of 6,100 acres is now covered to an average depth of 25 ft. by the 260,000,000 tons deposited since 1907. Some of the early gravity tailing contains sufficient value to justify reworking, although tardy recognition of this possibility resulted in none too favorable disposal.

OMEGA GOLD MINES, Larder Lake, Ont., discards 525 tons per day, of which 68% is <200-m. Pulp with 33% solids is pumped by 5-in. rubber-lined pumps through 6-in. wood-stave pipe on 5-ft. trestles around the periphery of a dam about 810 ft. square; this was started 5 ft. high on a flat with earth scraped up by a small caterpillar dragline. Spigots lined with cast iron, spaced 10 ft. apart, discharge sands through transverse sublaunders; this sand is shoveled up into a border crest 10 to 12 in. high. Slime is drawn off by 90° reducing elbows at 100-ft. intervals and discharged into the pond. The dragline raises the wall about 5 ft. in the autumn for winter storage. Water is withdrawn through an uptake weir at the center of the pond, thence through two 8-in. pipes in parallel through the dam to a return-water sump. Freezing at −48° F. caused no interruption. Cost for 12-mo. period 1937–8 was 3.5¢ per ton.

COPPER QUEEN discharged 5,000 tons per day of flotation tailing thickened to 50% solids in one 200-ft. and two 75-ft. thickeners. Spigot product was flowed in a 23 × 10-in. launder (slope 1.6 in. per ft.) to a trestle with bents 25 ft. high on 14-ft. centers. Sand spigots discharged during 4 to 8 weeks through one set of sublaunders directed toward the crest; thereafter the deposited sand dried while current sand was discharged at another point. Dried sand was shoveled into a border crest 3 to 4 ft. wide by 3 ft. high. Water passed through an uptake weir at center of pond, thence through a cribbed tunnel to a return-pump sump for 220-ft. lift back to storage. Lime and iron salts in the tailing water prevented dusting.

NACOZARI. Flotation tailing, 2,300 tons per day, contained 58% <200-m.; pulp at 19% solids flowed 4,000 ft. in a 22 × 10-in. launder, sloped 3/16 in. per ft., to dam trestle with bents on 14-ft. centers. Sands were removed by spigots or thickening cones. Water (including flood water) flowed over an uptake weir at center and thence by concrete tunnel through the dam. Dams were 140 ft. and 100 ft. high.

MORENCI (1936) discarded 5,000 tons per day of flotation tailing thickened to 42% solids in one 200-ft., one 130-ft., one 100-ft., three 60-ft., and two 50-ft. thickeners at the mill; thence by ditch and flume 15,000 ft. to the dam. Here 8-in. pipe in 20-ft. lengths, sloped 0.9 in. per ft., and discharging through holes at 6-ft. centers, was supported behind a wood fence 2 ft. high, against which the sand deposited. The steps of the dam were 2 ft. high. Over-all water recovery was 70%.

CARDINAL. Tailing, 300 tons per day, 60% <200-m., in pulp with 45% solids, is lifted 16 ft. by pump, and flows thence by gravity through 2,000 ft. of 3-in. pipe to the dam. Sands are deposited by 2-in. spreader roses, 20 ft. long, with hose, spaced 50 ft. Cement (1 sack per 40 tons) is added during 2 to 3 hr. per shift as a setting agent.

CHINO discharges 13,500 tons of flotation tailing per day. Pulp, at 22% solids, flows through 30-in. wood-stave pipe (slope, 0.07 in. per ft.) 6,600 ft. to a 20 in. wood-stave distributing pipe around the pond. Holes at 10-ft. intervals discharge sand to sublaunders for deposit. Crest border is maintained by a traction ditcher. Steps are 16 ft. high. Water recovery is 60%.

YELLOW ASTER. Tailing, 20% <200-m., 30% solids, is pumped 1,400 ft. through 4-in. pipe to a 5-in. pipe header on a low trestle along a dam. Outlets at 30-ft. centers consist of 1 1/2-in. nipples with 16-ft. lengths of rubber which deposit sands close to the dam face; slimes discharge into the pond.

EL POTOSI delivers 2,400 tons per day through 3,200-ft. launder lined with cast iron to foot of the dam; thence by Wilfley pump through 6-in. pipe 700 ft. along dam crest; there sands discharge through 1 1/2 × 18-in. nipples spaced 4 ft. Water is skimmed by weirs. Dam steps are 10 ft. high. Coarseness of sand and oxidation of pyrrhotite make the dam coherent.

HARMONY MINES. A rake classifier on a truck along the crest de-sands tailing carrying 18% solids. Reclaimed water from the dam is filtered and cake conveyed 60 ft. to a dump.

SILVER DYKE. Tailing is de-sanded in an Akins classifier, sand going to the dam by belt; slime is thickened, the water re-used, and spigot product pumped to a pond.

CLIMAX. See Sec. 2, Fig. 142.

Clarification of tailing water to avoid stream pollution is required by law in certain states. A coagulant is ordinarily necessary to increase the settling rate or to get an overflow sufficiently clear. Common coagulants are: acid sodium sulphate (saltcake), aluminum sulphate, caustic starch, ferric sulphate, formic acid, hydrochloric acid, lime hydrate, sodium aluminate, sulphuric acid, zinc sulphate.

Elevation of tailing is adopted either to stack comparatively dry tailing in a pile or to extend the radius of gravity disposal. The most commonly employed means of elevation are: (*a*) inclined trams; (*b*) sand wheels; (*c*) belt-bucket elevators; (*d*) inclined belt conveyors; (*e*) centrifugal sand pumps; (*f*) air lifts.

Sand wheels up to 60-ft. diameter have been used in South Africa and are still retained at CALUMET & HECLA for transferring tailing from the main concentrator to retreatment works, on account of their simplicity, durability, and efficiency. For details see Sec. 18, Art. 20.

Belt-bucket elevators are used for tailing disposal in the Tri-State district but newer mills employ inclined conveyors handling dewatered tailing. When the disposal space within reach of the mill elevator and its distributing launder is exhausted, a second elevator of the same height is erected on top of the first pile, receiving its pulp through launder from the top of the first elevator, and distributing its discharge by a second launder. The system is extended in this manner until as many as three or four intermediate "dummy" elevators are installed in addition to the mill elevator and the final stacker.

Owing to the grade (2 in. per ft.) required for connecting launders, and an unavoidable drop of about 6 ft. at the upper end of each elevator, the combined lift of the elevators will be about twice the height of the final pile, and all water required for flushing through the successive launders (1.7 tons per ton of tailing) must be elevated the same distance. An average mill of the district discharges 25 tons and a large mill 45 tons of tailing per hr. At an average mill, elevator belts are 8-ply, 24 in. wide, with buckets 24 by 7 in., made of 10-gage steel, spaced on 18-in. centers; this permits three shifts of buckets during the life of one belt, which is usually about 18 mo. Average speed is 275 ft. per min.; average power for a system containing one or two dummies, 0.44 hp. per ton of pulp, equivalent to 1.18 hp. per ton of dry tailing deposited.

A new 60-ft. dummy elevator costs (1925) about $2,000 complete, itemized as follows: 136 ft. of belt @ $3.85 = $524; 90 buckets @ $1.31 = $118; 1 spout, $40; 15-hp. motor and material and erection of elevator structure, $1,318. COST of operation of a system containing five elevators will average, per year: power (300 days of 20 hr., 75 hp. @ 1.5¢ per hp.-hr.), $6,750; labor for maintenance and attendance, $250; total, $7,000, equivalent to 4.7¢ per ton for a mill of average size, or 2.6¢ per ton for a large mill.

Inclined belt conveyors represents standard practice in the lead belt of SOUTHEAST MISSOURI, where a single mill may dispose of 2,000 to 4,000 tons of sand tailing per day (*57 A 322*).

The sands are mechanically dewatered (shovel wheels are preferred) to 8 to 20% moisture and delivered to a rubber-covered belt conveyor, usually 24 in. wide, inclined 16°, and moving 300 to 350 ft. per min.; in one exceptional case the speed was 475 ft. per min. up 23° slope; in general, 18% moisture will cause tailing to slide on a 16° slope. The belt is usually lengthened by units of 75 ft., as the pile gains height. Idlers for this wet work must stand hard usage. The standard 5-pulley grease-lubricated type is in general use. Discharging from the belt may require assistance by air or water jets. Tailing is distributed from the end of the belt through semicircular launders (9-in. radius) of No. 10 sheet iron in 4-ft. sections. They are laid on the pile with a slope of 2.5 to 3 in. per ft. Flow is assisted if necessary by water pumped through a pipe from the mill to the upper end of the conveyor; in some cases

part of this flushing liquid is dropped on the flank of the sand pile, washing out a cavity to be concurrently filled with sand from the conveyor. Slime tailing was sometimes filtered through sand piles, yielding clear water to the reclaiming pond, but impounding dams for slime tailing are now practically always used.

Centrifugal sand pumps are now available in durable types and adequate sizes to stand the severe service of pumping large volumes of tailing. (For pumps in general mill service, see Art. 6, also Sec. 18, Art. 17.) Sands up to 1/8-in. size can be pumped safely, if carried by at least three parts of water; coarser sands are being pumped, but at the cost of excessive wear. Pulps below 48-m. can be pumped at a dilution of 1 : 1; and, in general, trouble due to sedimentation is less likely to occur with thick than with thin pulps. Pipes through which coarse pulps are being pumped should be inclined at least 20° from the horizontal, to permit complete drainage when the pump stops.

At UTAH CONSOLIDATED 950 tons per day of tailing (80% <200-m.) in pulp carrying 40% solids is pumped against a head of 35 ft., using a 6-in. Wilfley pump. BUNKER HILL & SULLIVAN lifted 600 tons of general tailing with 24,000 tons of water per day against a 25-ft. head with a 12-in. Byron Jackson pump direct-connected to a 75-hp. motor at 900 r.p.m. (*120 P 525*). MIAMI formerly used three 6-in. Wilfley pumps (with three others always in reserve) to lift 3,300 g.p.m. of tailing pulp carrying 22 to 27% solids (averaging 6,000 tons dry solid per day ground to 48 *mog*) against a total head of 46 ft. Each pump was driven at 1,020 r.p.m. by belt from a 50-hp. motor; the power requirement was 0.45 kw.-hr. per dry ton. The delivery pipe was 18 in. diameter and was steel for a short distance from the pumps, the remainder redwood; total length, 1,280 ft. The average pulp velocity was 4.2 ft. per sec. The expense per dry ton was: power, 0.594¢; labor and supplies for operation, 0.224¢; maintenance of pumping plant, 0.212¢; total, 1.032¢, not including labor on the dump. Wood pipe showed no wear after 18 mo. (*C. E. Chaffin, PC*). This system is now displaced, rearrangement of the milling process having made it possible to discard tailing by gravity from a higher level (see p. 20–37).

Air-lifts were installed at the CHINO COPPER CO. in 1919 to raise 12,000 tons of tailing per 24 hr. to a height of 40 ft., delivering into a gravity launder (*J. M. Sully, PC; 112 J 806*). Costs for the year 1923 were 1.028¢ per ton of dry solids lifted. The cost for a belt-bucket elevator previously used was 1.954¢ per dry ton. No trouble was experienced in starting the air lift, even under 32 ft. of settled slime. Experiments demonstrated the possibility of its use on tailing containing everything up to 1-in. size with 50% solids in suspension.

Possibility of utilizing tailing may have a bearing on the selection of the method for temporary disposal. Common uses for mill tailing are: (*a*) mine filling; (*b*) for retreatment; (*c*) for road building, railroad ballast, and structural purposes; (*d*) for recovery of soluble constituents from crusts formed by evaporation; (*e*) for agricultural purposes.

Mine filling. At the CHAMPION mine deficiency of coarse waste filling is made up by hauling mill tailing up to 1/4-in. size in railroad cars and dumping into a raise connecting with the working levels. The sand is distributed in the stopes by blowing through pipes up to 250 ft. long from a tank holding a charge of 1.5 tons, using air at 75 lb. pressure. The cost is 2¢ per ton of sand moved. Burning stopes in the LEONARD, TRAMWAY and WEST COLUSA mines, Butte, were filled with flotation tailing, both old and currently produced, of which 50% was <280-m. The material was sluiced through a 3,650-ft. flume, 23 in. wide, on 2% grade, in a pulp carrying 20 to 50% solids and 250 to 600 g.p.m. water. Pulp was conducted down the shaft in a 6-in. cast-iron pipe and distributed 800 to 1,000 ft. laterally through 4-in. pipe (cast and wrought) with bends of 4-ft. radius. A head of 100 ft. was usually satisfactory for distribution (*68 A 61*).

Retreatment of tailing by tabling, ammonia leaching, and flotation forms an important part of the present milling operations at CALUMET & HECLA (*117 J 277*), the material having been formerly deposited under water and along the shore of Torch Lake, from which it is reclaimed by suction dredges. (See Sec. 2, Fig. 11.) At ANACONDA, when starting the mill in 1901, slime tailing was saved for future treatment by collecting it in six earth ponds, each 300 by 600 ft. in area and averaging 15.5 ft. deep, the flow, when possible, being continuous through three ponds in series. Settled material was excavated by dragline scraper and piled alongside the ponds (*46 A 249*). In subsequent years, this accumulation afforded notable amounts of cheaply recovered copper. At CHINO a similar plan was followed during early operations, and later a 1,000-ton mill was erected to treat the accumulated tailing. At PANDA, 4,000 tons per day of a copper carbonate ore was concentrated by jigs and tables. The tailing averaged 5% Cu, easily recoverable by leaching, for which treatment it was impounded (*29 MM 137, 5 MMt 55*). At the SWEENEY mill, Kellogg, Id., 1,200,000 tons of jig, table, and flotation tailing, <20-mm. in size and averaging 1.9% Pb, was re-treated. The pile had been formed by the Joplin method of elevators and launders (see p. 20–39); it covered 20 acres, had maximum height of 70 ft., maximum slope of 20° 07′, a minimum natural slope of 4° 30′, and weighed 110 lb. per cu. ft. It was reclaimed by steam shovel, standard-gage cars, and locomotive, and inclined belt conveyor. (*119 P 969.*) At UTAH LEASING CO. old tailing (0.7% Cu as chalcopyrite) from the Cactus mill was reclaimed at the rate of 620 tons per day by steam shovel and 5-ton cars hauled 1,000 ft. by a steam locomotive.

In general, when disposing of tailing in expectation of subsequent re-treatment, the following precautions should be observed, where practicable, even at some additional cost (*58 A 178*): (*a*) when starting a mill, the earliest tailing should not be placed so that it will be buried under later accumulation, which will probably be of lower grade; (*b*) middling should not be mixed with tailing; (*c*) tailing

should be placed in a deep and narrow rather than a broad and shallow deposit, to facilitate reclamation; (*d*) sand and slime tailing should be separated; the latter is not only lower in grade but also needs no re-crushing before further treatment.

Road building and railroad ballasting consume important amounts of coarse mill tailing in the Tri-State, southeastern Missouri, Lake Superior, northern New Jersey and numerous other districts situated near populous communities. At the RICHARD mine, Dover, N. J., a large part of the hard, light-colored tailing from dry concentration of iron ore was sold for structural purposes within a radius of 100 miles (*115 J 973*). Two coarse grades, 2~3/4-in. and 3/4~3/8-in., sold for $1 per ton, and sand <1/8-in. for 80¢ per ton. The income from this source was a setoff against fine crushing for recovery of additional iron. The sink-float tailing from the AMERICAN ZINC, LEAD & SMELTING CO. mill at MASCOT, Tenn. (1 1/2 in. maximum size), is re-screened and classified into sized products suitable for various structural purposes; the largest consumption is for railroad ballast, but some was shipped as far south as Tampa, Fla. A finer material (80% <200-m.) was shipped as far as New Orleans, Memphis, and Washington, for use in street and road construction (*H. I. Young, PC*).

Brick of excellent quality and high acid resistance is made from ANACONDA flotation tailing, which averages 20% alumina; the same practice was applied to mill and cyanide tailing at the OPP mine, Oregon (*115 J 492*).

Agricultural uses. The fine limestone flotation tailing (85% <100-m.) at MASCOT finds a good local market as soil dressing because of its lime content.

4. TOPOGRAPHY OF MILLSITE

General. The slope of the ground selected for the millsite is not only a determining factor in the cost of construction, but also has an important bearing on the cost of operation. Steep slopes (25–35°) should be avoided, if possible; moderate slopes (5–15°) or even level sites are preferable. Terraced mills had some advantages for high-grade or coarse-grained ores treated by graded crushing and successive stages of gravity concentration. But a flotation mill with large-unit crushers and parallel grinding and concentration is better adapted to flat or gently sloping sites, so that the expensive many-terraced mill is seldom required and rarely built today. In the modern mill, crushing is almost invariably done in a building separated from and independent of the grinding and concentrating mill, and inclined conveyors distribute the crushed product to the mill-storage bins. Thence one drop is provided to the grinding mills, a second to the concentrating floor, and a possible third to the concentrate-handling plant. Such drops, with the necessary bench widths, can be obtained on a 10–15° slope. On a level site the storage bins can be raised on suitable foundations, inclined conveyors used for necessary elevation of dry ore, and pumps for wet material. The added operating cost is small and is largely offset by better and more ready supervision, and greater ease of repair. Building design is simplified, since standardized stock types of trusses can be selected, and the height of vertical members can be reduced to a few dimensions by bringing foundation walls or footings up to a common level at small expense. Such a building can be erected by men working mainly from the ground, with the assistance of a few gin poles. Cost data relating to the erection of typical mills are given in Art. 14.

The CONSTRUCTION FEATURES most affected by slope of site and type of mill are: excavation, retaining and foundation walls, design and erection of frame, with special reference to support of heavy or vibrating machinery and snow loads; natural lighting, and ease of enlarging. The OPERATING FACTORS most strongly influenced are: elevation and re-elevation of ore and its products, pumping and re-pumping of water, labor required for supervision, facility in making repairs, and replacements.

Excavations required for a terraced site are not only larger in volume than for a level or gently sloping site, but are also more expensive per cubic yard, owing to the difficulty of employing horse or mechanical traction in the constricted working spaces. For methods and cost of excavation, see Table 58. See also *Peele*.

Retaining walls are an essential feature only in a terraced mill, although occasionally required elsewhere. On a steep hillside in loose material, retaining walls must have exceptional solidity to withstand the combined settling effect of drainage and the jarring of heavy machinery. When benches are in rock, retaining walls become more or less ornamental only, and are sometimes omitted. Retaining walls generally serve also as foundations for building and equipment.

Foundations for the mill building (aside from retaining walls) need have only moderate bearing strength for mills of low average height; in such mills, both terraced and level, the massive equipment rests on the ground, leaving little but the walls, roof, cranes, and elevators to be supported by the vertical members of the structure. In tall mills, while it is possible likewise to place the heaviest crushers on the ground, provision must usually be made for carrying heavy and vibrating loads on fairly long vertical columns, and the foundations for these must be substantial. Safe bearing pressures for earth and rock are given in Table 26.

Design and erection. In a terraced mill considerable diversity will occur in the dimensions of the several panels and their individual members, calling for a large amount of detailed designing. Erection is retarded by the necessary distribution of structural elements over a large area and at numerous

levels. A tall mill also requires skillful and detailed designing; its erection is usually more rapid than that of a terraced mill because the materials can be assembled at a few convenient points and hoisted into place by one or two derricks. A low, flat building has the advantage of simplicity in design; standardized stock types of trusses can be selected, and the height of vertical members can be reduced to a few dimensions by bringing foundation walls or piers up to a common level at small expense. Such a building can be erected by men working mainly from the ground, with the assistance of a few gin poles. Cost data relating to the erection of typical mills are given in Art. 14.

Enlargement should be provided for in the original design; this is readily done, if the layout is on the UNIT PRINCIPLE, *i.e.*, with the machines so arranged as to constitute a plurality of independent mills in parallel; the size of each unit depending on the magnitude of the original undertaking. Thus a 500-ton mill might well consist of two 250-ton units; a 1,500-ton mill of three 500-ton units; a 5,000-ton mill of five units, etc. The larger the unit, the lower the first cost per 24-hr.-ton. Enlargements are made most easily at a terraced mill, since the direction of flow is usually directly down slope, with only subordinate amounts of lateral transfer of products, and additional similar sections at either end can be supplied with ore readily by an extension of the receiving bins, or by a distributing conveyor. A flat mill can usually be extended in the same manner, provided it has been designed originally in parallel units. A tall building offers the most difficulty, since its ore must be received at a central point and the flow is mainly vertical. BUNKER HILL & SULLIVAN doubled the original capacity of its No. 2 West mill by erecting a duplicate 5-story addition on the opposite side of its receiving bin.

Table 26. Safe bearing pressures, tons per square foot (*after Baker*)

	Minimum	Maximum
Rock equal to the best ashlar masonry	25	30
Rock equal to the best brick masonry	15	20
Rock equal to poor brick masonry	5	10
Clay in thick beds, always dry	6	8
Clay in thick beds, moderately dry	4	6
Clay in soft beds	1	2
Gravel and coarse sand, well cemented	8	10
Sand, dry, compact, well cemented	4	6
Sand, clean, dry	2	4
Quicksand, alluvial soils	0.5	1

Gravity flow of pulp and as nearly complete elimination of elevators and pumps as is possible are the main objects sought in mill design. In districts such as southwest Colorado, and the coasts of Alaska and British Columbia choice is practically limited to the terraced site, and in other localities, where ore or water or both can come by gravity to a mill having the necessary space for tailing disposal, also by gravity, the advantages of a terraced site probably outweigh its drawbacks. In other situations, requiring initial elevation of ore or water or mechanical elevation of tailing, the choice of a site and the decision as to type of mill demand careful investigation.

Type of mill. As between a tall or terraced and a one-level mill structure, the decision is based on comparison of the costs of the following items: (*a*) Initial elevation of ore; (*b*) initial elevation of water; (*c*) final elevation of tailing; (*d*) final elevation of concentrate; (*e*) intermediate elevation of ore and products; (*f*) re-elevation of water; (*g*) interest and amortization on excess cost of erecting and installing a terraced or tall mill; (*h*) increased labor charges, due to inconvenience of supervising operations on numerous floors; efficiency of extraction may be adversely affected for the same reason.

Initial elevation of ore to the top of the mill by means of the mine-shaft hoist can be performed at little or no expense above that required to deliver the ore at ground level; this is general practice in many districts. Other common methods of initial elevation are by chain-bucket elevator, inclined pan conveyor, inclined belt conveyor, and inclined trams or elevated trestles. For methods used at specific mills see Secs. 2 and 3.

At BUNKER HILL & SULLIVAN (*S. A. Easton, PC*) the entire feed for No. 2 West mill (50 tons per hr. of <1.25-in. material weighing 150 lb. per cu. ft.) is elevated by a belt conveyor 227 ft. long, inclined 22°, and rising 52 ft.; 5-ply belt is 20 in. wide, speed 187 ft. per min. Head pulley 42 in., tail pulley 30 in., 5-pulley troughing idlers. Operating power, including five feeders, one weigher, one pump, one distributer, and one sampler, is 18 hp. Operating cost, per ton: equipment (troughing and idler pulleys, etc.), 0.029¢; belting, total length, 465 ft., 0.068¢; power, 0.009¢; labor (cleaning, oiling, etc.), 0.217¢; total, 0.323¢ per ton.

At UTAH APEX (*J. H. Manwaring, PC*) a chain-bucket elevator 76 ft. long, inclined 71° and moving at 63 ft. per min., is used to lift the entire mill feed of 100 tons per hr. The drive is a 25-hp. motor which draws 11.2 kw. at full load, 7.9 kw. empty. Run-of-mine ore is fed from a track hopper by a steel-apron feeder driven from the tail pulley of the elevator. Keystone rivetless manganese 9-in. chain lasted 5 yr.; 9-in. Simplex rivetless manganese chain was still in use at the end of 5 yr. Buckets, 108 spaced 18 in., are 24 × 14 × 17 1/2-in., No. 8 steel; cost $10.61 each. The original cost of the elevator in 1913, f.o.b. plant, was $3,093. The total cost of repairs during 10 yr., including one entire replacement of chains and sprockets, was 0.715¢ per ton; power (@ 1¢ per kw.-hr.), 0.112¢ per ton.

Initial elevation of water. (See Art. 2.) In those cases where water must be pumped, elevating it to the storage reservoir may be more costly than elevation of ore. In general, pumps are more efficient, mechanically, than ore elevators, but the fact that they may be

required to lift as much as 20 tons of water for every ton of ore, and also to a higher level, makes it essential to keep down mill height, unless abundant water under natural head is available.

Final elevation of tailing is ordinarily unavoidable at any mill on level ground. If treating an ore from which it is possible to extract clean tailing at a fairly coarse stage, a tall or a terraced mill may have the advantage of being able to dispose of this portion of its tailing without further elevation; but at BUNKER HILL & SULLIVAN, a tall mill on level ground at which some coarse-sand tailing is discharged, it is necessary to use a large tailing elevator with a lift of 25 ft. (*120 P 525*).

Elevation of concentrate. The importance of this feature is often exaggerated. Concentrate rarely exceeds 20% of the weight of original ore, and at most of the largest mills it ranges from 3 to 7%; hence, any design that provides an additional story or terrace solely to permit gravity disposal of concentrate will be unnecessarily expensive to construct, and is likely to be uneconomical in operation, if it throws additional work upon pumps or elevators at earlier stages of the process.

Intermediate elevation of ore in process can rarely be wholly avoided, even by the most steeply terraced mill.

BRITANNIA, a flotation mill with seven terraces and a drop of 250 ft. in a horizontal length of 209 ft., requires only one elevator. ALASKA-GASTINEAU, a table mill on a steeply terraced hillside, requires two sets of automatic skips (with 100-ft. lifts) and two bucket elevators. SILVER DYKE mill (tables and flotation), with 11 terraces and a total drop of 150 ft. in a horizontal length of 277 ft., requires one elevator of 27-ft. lift and an inclined conveyor with 19-ft. rise, in addition to a number of sand pumps.

In general, the necessity for intermediate elevation is most pronounced in those mills treating an ore in which the valuable minerals occur as particles of graduated size, recoverable by a stage process of reduction and giving rise to important quantities of middling products which must be returned for re-crushing; in such mills, terracing shows the least advantage over the flat system because no practicable amount of terracing (except in rare instances) can provide an exclusively gravity flow for all unfinished products. On the other hand, ores containing only finely disseminated minerals can often be reduced at once to the final size by consecutive crushing operations, most of the unavoidable re-elevation being performed by scraper classifiers, and separation is made on tables or flotation machines requiring but little mill height. For a milling operation of this character, a gravity flow through the whole concentrating division of the plant can be obtained by a moderate amount of terracing; the re-elevation saved thereby, as compared with a flat mill, while of relatively small lift, is large in total volume, the pulp usually containing 75% or more of water. Methods of re-elevating ore, dry or in pulp, are described in Art. 6 and Sec. 18.

Re-elevation of water. Assuming water reclamation necessary, the advantage is with a low mill. A tall or terraced mill can sometimes utilize the tailing water from jigs treating sized or washed ore as wash water on tables at a lower elevation, but in general clarified water in large amounts is not obtainable until near the end of the concentrating scheme, and most frequently is not recovered until after it has left the mill at the lowest point. If ore is re-elevated by pumps, it must be accompanied by at least an equal weight of water, and may require three times that amount, or more, depending upon its coarseness.

Interest and amortization. The excess cost of a terraced mill as compared with a one-level mill of corresponding capacity should be taken into account in comparison of operating costs. The amortization charge per ton will be small for a mill of long life. An elaborate and expensive mill would be injudicious for a mine of dubious life. This explains the character of mill structures commonly erected in the Wisconsin and Joplin zinc districts.

Supervision of machines is greatly impeded when the millmen are compelled to walk up and down stairs; hence in a large mill, justifying the employment of specialized millmen, it is advisable to place as many as possible of the machines of one kind on the same level; in a small mill, as much as possible of the whole equipment should be on one floor, to insure equality of supervision. Facility of supervision not only fixes the number of millmen to be employed at a small mill, but may influence the tonnage and recovery attained. A mill using several dissimilar crushers, or operating a process requiring a variety of concentrating apparatus or involving extended use of hydraulic classifiers, will need more supervision than a mill of the same capacity using only ball mills and flotation. Any mill, however small, needs a certain minimum of supervision, while in another mill of the same type a much larger tonnage may often be treated with the same labor force. A large mill is justified in the installation of mechanical equipment for performing certain operations, such as collection of concentrate, which can be done more profitably in a small mill by hand labor.

Repairs and renewals are much simplified in a level-site mill, where workshops and the operating floor can be joined by a level traveling way or overhead crane.

Lack of working space on the ball-mill terrace was one defect of the ALASKA-JUNEAU mill; the ALASKA-GASTINEAU provides a shop on every terrace; at the UNITED COMSTOCK commodious shops serve every part of the ball-mill floor by track and crane (*114 J 846, 117 J 616*).

5. MATERIALS FOR MILL CONSTRUCTION

The durability of a mill building should bear an approximate relation to the expected life of the mine; any expense incurred for making the structure outlast the mine is wasted. The useful life of a mill cannot always be predicted, but during the development of any mine or group of mines up to the stage at which erection of a mill becomes justified, enough information should have been obtained to permit a reasonable estimate of the minimum tonnage likely to be available. The largest and most expensive mills are not undertaken until the factor of ultimate tonnage has been most carefully investigated.

Foundations. Concrete is almost universally employed, except at certain small mills on ground not likely to be heaved by frost, where wooden blocking is sometimes sufficient. Materials for concrete aggregate can be developed readily; waste rock from the mine is satisfactory for coarse aggregate provided fines are removed; sand and gravel are usually available locally, and any harmful clay or dirt can be removed by simple washing.

At ALASKA-GASTINEAU all the concrete was made with rock and sand provided by excavation of an underground storage pocket adjacent to the mill.

Concrete both for building and machinery foundations is designed today to obtain maximum strength through a combination of high-grade concrete (testing 3,000 lb./sq. in.) and adequate reinforcing steel. Retaining walls may have the customary batter of 1 or 1 1/2 in. per ft. on the outside face, or may be vertical, as at ANACONDA and SANTA BARBARA, depending on the wall design and location of the reinforcing steel. Concrete foundations for heavy vibrating equipment, such as stamp batteries and pneumatic steel sharpeners, are topped with semielastic pads to protect both machine and foundation; but jaw crushers, cone crushers, ball mills, etc., are bolted directly to the foundation by anchor bolts imbedded in the concrete and are grouted in place after leveling.

Concrete may be poured at temperatures down to 0° F., if proper precautions are taken to avoid freezing. Hot water and hot aggregate are used; and the ground, forms, reinforcing, and concrete are kept warm for 48 hr. by live steam discharging slowly from 3/4-in. pipe through 1/8-in. perforations every 18-in., the entire foundation being covered tightly with tarpaulins except during actual pouring. Calcium chloride (2 lb. per bag of cement) is added during mixing to cause rapid setting. Cost of heating ranges from $2 to $4 per cu. yd. depending on the shape and volume of the foundation. In subzero temperatures the danger of freezing increases sharply, with corresponding increase in cost of protection, to an extent which is quickly prohibitive.

Concrete foundations must be carried below maximum frost penetration to avoid ground heaving. In freezing weather, form stripping and backfilling must be performed very shortly after heating is completed, to prevent the ground under the concrete from freezing. If the backfill is frozen, it should be thawed and tamped into place.

Framework. Timber, steel, and reinforced concrete are the customary materials. Wood is the only material found in older mills, and it is still occasionally employed for framing large mills and nearly always for small ones. Wood has the advantages of: (*a*) lower cost per unit of weight and also, in most places, per unit of strength; (*b*) reduced amount of detailed designing; (*c*) quicker delivery; (*d*) cheaper erection, by less highly skilled and more easily obtained labor; (*e*) elasticity, as compared with reinforced concrete. Its principal drawbacks are inflammability and liability to decay, especially in floors and mudsills, which are unavoidably damp. Unless the entire structure is fireproof, however, a slow-burning frame is not an added hazard, and adequate ventilation and chemical treatment reduce decay to a negligible minimum.

Structural steel is the prevailing material for large permanent mills, such as BRITANNIA (1,426 tons of steel in a terraced mill covering a horizontal area of 56,400 sq. ft., or 51 lb. per sq. ft.), EAST MALARTIC, MCINTYRE PORCUPINE, KERR-ADDISON (244 tons of steel in a mill covering 18,400 sq. ft., or 26.5 lb. per sq. ft.), COPPER QUEEN, CHINO, KIMBERLEY, PANDA, SILVER KING, HOMESTAKE (SOUTH), UTAH COPPER, and the cyanide division of the UNITED COMSTOCK mill (441 tons of steel in a building of 75 ft. maximum height covering 2 1/4 acres, or 9.2 lb. per sq. ft. of area). In addition to being fireproof and durable (if painted properly), steel has the advantage of permitting longer trusses and wider spacing, thus reducing the necessary number of columns which occupy or obstruct useful floor space (66-ft. spacing both ways at UNITED COMSTOCK); the columns themselves can also be longer without requiring such extensive cross bracing as would be needed for a wooden structure of same height. Many of the heavy loads (up to 60 tons) commonly carried by cranes serving the crushing departments of modern mills could not be supported safely on any practicable timber structure. While steel structures call for more detailed designing than wooden frames, much of this work can be delegated to the steel-work contractors; many steel fabricators carry in stock or can quickly supply columns, trusses, or whole buildings to cover specified floor areas with a roof of given height. Bearings or hangers for

line shafts can be attached easily to steel beams by clamps; they are readily shifted and do not weaken the members by bolt holes, as is the case with wooden beams.

Reinforced concrete has not yet been widely adopted for structural framework, although it was used in the coarse-crushing, fine-crushing, and concentrating departments of the UNITED COMSTOCK mill (*114 J 846, 117 J 516*); in this instance, owing to the easily available aggregate for concrete and the relatively high cost of structural steel, reinforced concrete was estimated to be nearly 20% cheaper than steel. Estimates of wooden construction were 30% lower than for concrete, but the saving on insurance within 3 yr. was enough to offset this difference. The cost of the structural concrete work, excluding 15,000 cu. yd. of foundation and retaining walls, was: Concrete, 132 cu. yd., $1,980; reinforcing steel, 21,600 lb., $1,050; forms, 9,500 sq. ft., $1,700; total, $4,730, or $35.83 per cu. yd. For all-steel construction, the corresponding cost for 106,020 lb. of steel, at 8¢ erected, was estimated at $8,481. In a mill of reinforced concrete, special attention must be given to the support of oscillating machinery, on account of the severity of the stresses caused by continuous vibration in one direction.

Walls may be tile, brick, cement block; gunite, either on metal reinforcing or as an added coating; corrugated iron, corrugated asbestos-cement; wood sheathing with a variety of outer covering, or fiberboard. Corrugated iron, galvanized or asbestos coated, is the commonest material. A wooden frame is usually sheathed with boards, to which corrugated iron is nailed over a layer of building paper. On a steel frame the corrugated sheet is attached by bolts, clamps, or wire, with no wood sheathing; this construction is fire-proof. If it does not afford sufficient protection against cold, the interior can be coated with gunite, applied against woven-wire or expanded-metal reinforcement, with as much insulating material as desired. Tile is light and warm; tile and brick and all-brick have long life.

The walls of the UNITED COMSTOCK cyanide section are composed of an outer layer of No. 24 corrugated and an inner layer of No. 28 plain galvanized steel, separated by two thicknesses of tar paper (Table 27). At the N. Y. ZINC Co. 5-story mill at Edwards, N. Y., the walls are hollow tile, and the equipment is entirely supported by a steel framework having no connection with walls (*116 J 95*). The tall, steel-framed RICHARD mill has hollow-tile walls for the lower half of its height, and asbestos-coated corrugated iron for the upper half (*115 J 973*). MCINTYRE PORCUPINE is largely hollow tile; large buildings at NORANDA are tile, small are mostly brick; both tile and brick are used at INTERNATIONAL NICKEL at Copper Cliff.

Tile walls are much improved in appearance by an outer coating of mortar or GUNITE; when this finish is intended, the tile should be placed rough side out. The best mixture for applying with a cement gun is four parts clean sharp sand to one part cement; in a dry climate, the sand may be increased to six parts. The outer face of the tile must be thoroughly moistened before the mortar is applied, but no reinforcement should be necessary, as would be required with a wooden wall. When applied with a cement gun (*Bul. 114, Cement Gun Co.*) 1 bag of cement and 3 cu. ft. of sand will cover 22 sq. ft. with a layer 1 in. thick. A force of eight men at $41 per day (including the operator of a portable compressor, which may not be necessary at an established mine plant) can average 1,300 sq. ft. of gunite per day. The cost of a cement gun, not including a portable compressor, ranged (1923) from $1,325 to $1,565, corresponding to free-air capacities of 100 and 225 cu. ft. per min. respectively.

Corrugated asbestos-cement board, such as Johns-Manville TRANSITE, has been used in the same way as corrugated iron, but is more easily damaged. FIBERBOARD such as TEN-TEST (1 in. thick) has been used where initial cost, light weight, and some insulation have been controlling factors, but it must be painted thoroughly inside and outside, and the joints must be covered carefully as protection against moisture. ONTARIO REFINING Co. weatherproof storage buildings, 400 ft. long, at Copper Cliff have walls covered with Transite clipped to steel framework. PARKHILL and THOMPSON-CADILLAC mills in Ontario have fiberboard walls.

Where protection against low temperature is important, as in Canada, the most usual wall construction is 1-in. wooden sheathing covered with waterproof building paper and an outer weatherproof covering of rock-faced asphalt roofing, asbestos sheeting, or stiff composition shingles. For additional insulation a ½-in. thickness of fiberboard may be placed outside the building paper, covered with building paper and the customary outer weatherproof facing. WRIGHT-HARGREAVES mill at Kirkland Lake and CONIAURUM mill at Schumacher have fireproof composition shingles and steel frame building. SLADEN-MALARTIC mill at Malartic and ALDERMAC mill at Arntfield have wooden walls covered with asbestos sheets. Smaller mills usually use rock-faced roofing as outer covering because of lower initial cost.

A comparison of estimates of costs and heat-insulating characteristics of different types of walls for the UNITED COMSTOCK cyanide building is shown in Table 27.

Table 27. Costs and heat-insulating characteristics of walls

	Cost per square foot, cents	Boiler horse-power to heat plant
Plain galvanized corrugated sheet	14.0	220
Gunite, 1 ½ in., on metal lath	19.6	116
Hollow clay tile, 4-in.	35.0	93
Galvanized corrugated steel outside, plain galvanized inside, 2 layers of tar paper between	19.5	125
Wood sheathing, tar paper, galvanized corrugated steel	24.5	93

Roofs. Corrugated galvanized iron is the commonest roofing material. In a cool climate, a board sheathing is almost indispensable to prevent condensation and dripping of moisture; the corrugated sheet is fastened down to this by lead-washered nails. CORRUGATED ASBESTOS-CEMENT SHEET may be used to replace corrugated iron; it has better insulating qualities but is more brittle. Asbestos materials are durable without paint, and they resist fire. Other roofs consist of two elements, *viz.*, a weight-carrying support and a weatherproof cover. For the former, light-weight pre-cast concrete slabs (HAYDITE) are durable and easily designed to rest on steel purlins; GYPSUM SLAB may be poured in place on mesh reinforcing; 2-in. tongue-and-groove or 1-in. shiplap are carried on wooden joists or on nailing strips on steel. The weatherproofing layer is of two types: (*a*) standard three- or four-ply asphalted felt for flat slopes, (*b*) rock-faced asphalted felt laid over one layer of impervious building paper for steeper slopes. For insulation to prevent condensation, 1-in. fiberboard, mopped up on all sides with asphaltic tar, is placed under the weatherproof cover.

BRITANNIA MILL required 96 tons of corrugated sheet for a total roof area of 58,100 sq. ft. SMUGGLER UNION mill in Colorado (cold winters with heavy snow) has a roof of No. 22 corrugated iron laid on one layer of 1/16-in. asbestos sheet and two layers of tar paper; the inside is gunite on woven-wire reinforcement. The roof over the cyanide department of UNITED COMSTOCK (96,400 sq. ft.) is made of 1 3/4-in. Oregon pine, tongued and grooved, covered with No. 20 corrugated sheet. The roof of the KIMBERLEY steel-framed mill (77,000 sq. ft.) is composed of 2 × 4-in. timber on edge laid face to face and covered with felt, tar and gravel (*115 J 244, 116 J 453*). At ONTARIO REFINING Co. the roof is gypsum slab poured in place with a built-up tar and felt covering. SLADEN-MALARTIC has a 2-in. layer of rockwool between upper and lower layers of 3/4-in. B.C. fir shiplap, covered with a 3-ply built-up asphalt-felt roof. KERR-ADDISON, EAST MALARTIC, and UCHI mills have roofs composed of 3/4-in. shiplap, 1-in. fiberboard, and 3-ply felt and asphalt built-up roof, for severe winter cold.

Snow, in addition to its dead weight of 12 lb. per cu. ft. (*Trautwine*), interferes with roof lighting and may cause damage by sliding in heavy masses. This may be prevented by: (*a*) snow guards; (*b*) giving the roof sufficient slope (30° or more) to cause the snow to slide soon after it falls (ALASKA-JUNEAU installed salt-water sprays to flush the snow off the roofs as fast as it fell); (*c*) making roof so nearly level that snow can not slide (as at HOMESTAKE SOUTH mill). According to *Kidder*, metal roofs in the Rocky Mountain and northwestern states should be designed for the following snow loads per sq. ft. of roof surface: 1/2-pitch, none; 1/3-pitch, 10 to 12 lb; 1/4-pitch, 20 to 25 lb.; 1/5-pitch, 27 to 37 lb.; 1/6-pitch or less, 35 to 45 lb. UNITED COMSTOCK roof, with an unbroken slope of 20° (1/3-pitch) was designed for a snow load of 40 lb. per sq. ft. and a wind load of 20 lb. per sq. ft.

Windows and skylights. Daylight is of the utmost importance in practically every department of a concentrating mill. It is easily provided in a tall structure, the walls of which can be composed of glass to a large extent, as in anthracite breakers. A terraced mill can be amply lighted from its sides, and also by vertical windows in the breaks of the roof.

The steeply terraced BRITANNIA mill has 22,300 sq. ft. of windows for lighting a horizontal area of 56,400 sq. ft. (*29 MM 204*).

A low, flat mill can be lighted by skylights in the roof, subject to interference by snow and probability of leakage unless constructed with special care; a turreted or sawtooth roof with windows in all available vertical spaces is frequently used for industrial plants and should be equally useful for ore-dressing plants.

Fenestra steel sashes have been installed in large numbers at UNITED COMSTOCK, HOMESTAKE, and numerous other mills with both steel and wood construction. At COPPER QUEEN the windows are glazed with ribbed glass, for diffusion of sunlight, and the skylights are of RUBBER GLASS. This material is used for skylights in many other mills in the Southwest, where snow is unknown, rain not abundant, and the sunlight so intense as to make the imparted yellow tint agreeable.

Windows and skylights may also form an essential part of the ventilation scheme for a mill, particularly in hot climates where air circulation is desirable to reduce humidity. Glass should be readily accessible for cleaning, and sufficiently protected to avoid careless breakage.

Floors. Wood and concrete are used indiscriminately in mills of either wood or steel construction. A wooden floor in the wet-concentrating section of a mill should be tight, to prevent loss of concentrate, and should preferably be laid with green timber, to avoid warping. Concrete floors are usually poured in place. Two- to 4-in. thickness of concrete poured over tight wooden floors produces a smooth impervious surface at little cost. It may be reinforced with expanded metal to prevent cracking. Concrete floors are preferable in cyanide mills and other plants where floors are washed down to recover spilled values.

UNITED COMSTOCK used pre-cast concrete slabs supported by steel frames. At the steeply terraced mills of the SILVER DYKE, NATIONAL COPPERMINES, and UTAH CONSOLIDATED mills reinforcement was obtained by discarded hoisting rope in lengths running unbroken from the highest to the lowest floor, passing horizontally through every floor and downward through the intervening retaining walls, thus tying the latter securely together.

The SLOPE of floors in the wet parts of a mill should be sufficient to permit rapid drainage; 1/4 and 1/2 in. per ft. are usual, the latter preferred. Slopes up to 2 in. per ft. have been used to permit launders to be laid on the floor, but this is unnecessary and makes walking unsafe. Duckboard walkways should be provided on concrete, particularly in wet sections, for both comfort and safety. If dry floors are to be cleaned by sweeping, they require no slope; but washing down floors is so easy and effective that concrete floors, even in the dry section, should be graded to permit it.

Floors should be kept as clear as possible of pipes and launders to permit easy walking and cleaning and free drainage. If it is planned to wash down floors, a sump should be provided to collect the water for pumping or other disposal. Where ground contour permits, it is considered good practice to install large sumps with a capacity sufficient for the entire contents of a thickener tank or agitator. Such sumps were constructed at KERR-ADDISON and SLADEN-MALARTIC.

Painting is done both for protection against corrosion and to assist lighting. Inside paint should therefore be of a light tint. Black corrugated iron should be protected by at least two coats of paint, renewed at frequent intervals. Galvanized iron does not usually require paint protection, although it is subject to rapid deterioration anywhere in the vicinity of a smelter. Paint does not adhere well to new galvanized iron, but after the metal has been exposed for 2 or 3 yr. any good paint will adhere firmly. Highly effective rust-resisting and cyanide-resisting paints have been developed for the protection of steel frames and tanks. Aluminum paint is being used moderately. Wooden buildings seldom are painted inside, although a coat of whitewash on the interior of a wooden mill building reduces the fire insurance rate in Canada. It is difficult to make whitewash adhere firmly enough to resist loosening under continuous vibration, but it can be applied successfully to wooden buildings by an airbrush following a glue sizing coat. An airbrush is useful for applying oil paint also.

Table 28. Square feet covered per gallon of paint

	On wood	On metal	On concrete
Priming coat	300–400	500–700	150–250
Second and third coats	400–600	700–800	300–400
Spray painting, first coat	275–350		
Second and third coats	500		

Cost of spreading paint is about double the cost of the paint. Normal paint consumption is given in Table 28.

First coat of spray painting is equal to 2 coats of brush painting. Spray painting, cold-water white, etc., 1 lb. covers 25 sq. ft.

6. ARRANGEMENT OF MILL EQUIPMENT

The grouping of mill equipment should aim to satisfy the following requirements: (*a*) mechanical transfer of feed and products by the shortest and most direct routes, utilising gravity flow so far as economically practicable (see Art. 4); (*b*) convenience of superintendence (see Art. 4); (*c*) economical connection with driving power (see Art. 7); (*d*) facility of repairs (see Art. 9); if possible, provision should be made for by-passing any piece of machinery undergoing repair, to avoid complete suspension of operations; in a small mill, without duplicate equipment, this may not be possible; (*e*) facility of enlargement or remodeling (see Art. 4); (*f*) isolation of dust-making operations, with or without arrangements for collecting the dust (see Art. 8).

Grouping in plan. Dimension sheets giving over-all dimensions of the individual pieces of ore-dressing equipment are usually obtainable from the makers. The additional necessary allowance of floor space between and around the machines composing a single group should provide for: (*a*) walkways for inspection and adjustment of machinery; also, in some cases, for manual disposal of concentrate by wheelbarrow or tram car; (*b*) working space for making repairs with minimum amount of carriage; (*c*) launders, chutes, or conveyors for the several products of the operation; (*d*) motors, in case of individual drives, with speed reducers when required; (*e*) elevators or pumps, possibly serving other groups of mill equipment.

Jigs, tables, pneumatic flotation cells, and other equipment to which a sufficient amount of attention can be given from one side, are often consolidated into pairs, or blocks of four, mainly to facilitate feeding and to combine discharges, but also to economize floor area. Ball, pebble, or rod mills are usually set as close as possible to a sand-slime separator. Screens and hydraulic classifiers seldom require special allowance of floor space, since they can usually be supported overhead. Spacing of coarse crushers is frequently determined by the dimensions of the bins from which they receive their feed or to which they deliver

Table 29. Total floor areas of typical mill buildings

Mill and location	Capacity, tons per 24 hr.	Process	Segregated areas, sq. ft. per ton per 24 hr.							Total area per 24 hr.-ton
			Crushing	Grinding	Flotation	Thickening	Filtering	Agitating	Misc.	
American Metal, N. M.	650	Flotation Pb-Zn	.....	.....	.....	.....	.....	.....	.....	50.0
Antomok, P. I.	775	Cyanide	2.2	6.1	.....	17.4	5.6	9.2	19.8	60.3
Bunker Hill & Sullivan	1,200	Jigs & Flotation Pb-Zn	2.79	8.82	5.92	9.0	1.46	.....	14.5	42.49
Demonstration, P. I.	350	Cyanide & Flotation	10.5	12.3	8.0	31.6	3.2	4.4	16.4	86.4
East Malartic, Quebec	1,000	Cyanide	Cr. 4.18 Scr. 1.56	3.80 *b*	.....	12.16	2.24	2.70	3.90 *c*	30.54
Gunnar Gold, Manitoba	150	Cyanide	10.2 *d*	4.0 *b*	.....	19.0	2.68	10.7	22.22 *c*	68.8
Haile, S. C.	160	Cyanide & Flotation	4.4	8.1	.....	17.7	.....	10.1	4.0	44.3
Itogon, P. I.	1,000	Cyanide	Underground	3.0	.....	10.0	4.0	1.0	3.0	21.0
I. X. L. Mining Co., P. I.	400	Cyanide & Flotation	1.1	8.5	0.8	18.8	3.0	10.5	.....	42.7
Kerr-Addison, Ontario	750	Cyanide	Cr. 4.18 Scr. 1.58 *e*	2.0 *b*	.....	6.0	1.60	2.29	6.55 *c*	24.2
Lake Geneva, Ontario	100	Flotation Cu-Zn	11.3	6.72 *b*	4.8	2.4	0.7	.....	1.34 *c*	27.26
Lebel Oro, Ontario	100	Cyanide	18.04 *d*	4.80 *b*	.....	16.2	3.60	9.72	20.61 *c*	72.97
McKenzie Red Lake, Ontario	175	Cyanide	9.0 *d*	7.0 *b*	.....	10.44	2.56	.....	14.30 *c*	51.30
Morris Kirkland, Ontario	100	Cyanide	Cr. 10.5 Scr. 2.22	7.20 *b*	.....	22.08	4.20	13.86	31.86 *c*	91.92 *f*
Mount Isa, Australia	2,000	Flotation Pb-Zn	2.95 *d*	3.81	8.40	2.63	1.0	.....	0.5	19.29 *g*
Normetal, Quebec	500	Flotation Cu-Zn	2.6 *a*	7.26 *b*	10.78	5.78	1.6	.....	9.66 *c*	37.68
Pend Oreille, Idaho	600	Flotation Pb-Zn	1.67	5.67	6.43	.....	2.90	0.20	3.38	20.25
Pickle Crow, Ontario	400	Amalgamation; Cyanide	8.20 *d*	4.64 *b*	.....	10.22	2.20	3.58	22.88 *c*	51.72
Sladen-Malartic, Quebec	300	Cyanide	7.46	3.97 *b*	.....	7.93	1.02	4.19	11.34 *c*	35.91

a Does not include r.o.m. bin.
b Does not include mill bin.
c Does not include conveyor galleries.
d Includes sorting.
e Includes space for expansion to 1,500 tons capacity.
f Includes space for expansion to 175 tons/24 hr.
g Includes all bins.

rather than by the amount of floor space they actually require. Table 29 gives total floor area of representative mills.

Grouping in vertical relation. The difference in elevation between the points at which a given piece of apparatus receives its feed and discharges its products is most important from the standpoint of mill design, since it is this dimension that fixes the position of the machine with respect to the "stream line" of the mill. Over-all vertical dimensions are needed for placing foundations and making allowance for head room; the latter should make due provision for hoisting out parts of machines requiring replacement.

Chutes and launders. (See Sec. 18, Arts. 15, 16.) In general, a chute for nominally dry material should have a slope of not less than 45°, to avoid choking in case of accidental or temporary wetting. A launder that proves to have insufficient grade can be corrected, if it is impossible to increase its slope or if inadvisable to increase the proportion of water, by diminishing its width or by introducing liners of smooth material with low coefficient of friction. Rubber, both of crude crepe and vulcanized varieties, is used rather frequently as lining material for launders subjected to hard service; in spite of its higher cost per lb., it is usually cheaper than steel or chilled iron per sq. ft. of surface, and compares favorably with those materials in withstanding wear. Locally made concrete slabs are usually much cheaper per sq. ft. than iron. In places where sufficient gravity flow is not easily obtainable, as in collection of concentrate or tailing from a long line of jigs or tables, a shaking launder on a grade as low as 3/8 in. per ft., suspended by flexible wood strips and oscillated by an ordinary table head-motion at one end, has been found useful at NEW JERSEY ZINC CO. and SANTA BARBARA (*112 J 1050*). Another method applicable to jig tailing is to dewater on a screen and deliver to a horizontal belt conveyor. Use of pipes as substitutes for launders is increasing. They are installed to permit turning at intervals to compensate for wear.

Launder slopes. The slopes given in Table 30 are suggested as working limits for rectangular wooden launders conveying average ores of pyrite, zinc, and copper, with concentrating ratios between 4 and 20 to 1, and dilutions of not less than 2 water to 1 ore. See also Sec. 18, Art. 16.

Table 30. Average slopes for launders

Jig and table mills	Inches per foot	Fine-grinding and flotation mills	Inches per foot
Trommel product:		Sands, 20% moisture, classifier to	
> 20-mm.	5–6	tube-mill:	
20~10-mm.	4–5	30-m.	4–6
10~5-mm.	3–4	80-m.	3–4
5~2 1/2-mm.	2–3	Tube-mill discharge to classifier:	
<2 1/2-mm.	1 1/2–2	30-m.	2–2 1/2
Table feed, 20-m.	1 1/4–1 1/2	80-m.	1 1/2–2
Table tailing, 20-m.	1 1/2	Classifier overflow to flotation:	
Table middling, 20-m.	1 1/2	48-m.	1/2–3/4
Table concentrate, 20-m.	2 1/2	80-m	1/4–1/2
Tailrace, mixed sizes	3/8–3/4	Flotation concentrate	2–3
		Flotation tailing	1/4–1/2
		Tailrace	3/16–1/4

For zinc-lead and iron-oxide ores of low concentrating ratio, the launder slopes would need to be probably 25% steeper than those stated above.

Cost of launders. Estimated factory cost (1933) per lin. ft. of knocked-down launders made of 1 5/8-in. surfaced fir with tongue-and-grooved joints, and nailed-up frames at 4 to 6-ft. intervals, is as follows: 5 1/2 × 4-in., $0.50; 11 × 8, $1; 16 1/2 × 12, $1.50; 22 1/2 × 16, $2; 34 × 20, $3. Cost of assembly on the job should be added. From the figures in Table 31, relating to reconstruction of the PHELPS-DODGE MORENCI mill in 1924, it is seen that the labor cost to install $1 worth of unfabricated launder material ranged from $1 to $1.25. In this mill, only 14.4% of the whole launder system was over 16 in. wide.

Elevation of ore in transit through a mill is practically unavoidable, even on steeply terraced sites; on flat sites, elevators or sand pumps constitute a large and expensive part of the mill equipment, beside requiring close attention to maintenance. Structural details of inclined belt or pan conveyors, belt-bucket or chain-bucket elevators, sand pumps, centrifugal pumps, and suction pumps for ore pulps are given in Sec. 18.

Proper selection of elevating equipment depends less upon relative power efficiency than upon reliability, maintenance, cost, and convenience, since the power consumed is comparatively small (1 to 5% of total mill power).

In dry-crushing plants, the choice lies between bucket-elevators, belt conveyors, and pan conveyors. Mechanical efficiencies are approximately 60%, 50 to 70%, and 20 to 35% respectively. For wet pulps, bucket-elevators and pumps are used. With the high cir-

Table 31. Cost of launder construction, Morenci mill, Phelps-Dodge Corporation

Department	Length, feet	Width, inches	Cost per linear foot	Lumber, board feet	Cost per M.B.M.
Tables and deslimers	1,866	12	Labor....$1.46	11,403	Labor.....$34.00
	204	16	Lumber.. 0.64		Materials.. 18.65
	100	18	Cast-iron lining.. 0.65		Total, including lining...$52.65
	18	24			
	2,188		$2.75		
Primary grinding, classification and flotation	363	12	Labor....$2.01	26,308	Labor.....$68.23
	500	16	Lumber.. 2.92		Materials.. 97.47
	863		Wrought-iron lining.... 0.10		Total, including lining..$165.70
			$5.03		
Secondary grinding, classification and flotation	801	12	Labor....$1.84	19,519	Labor....$147.78
	505	16	Lumber.. 1.17		Lumber.. 94.44
	72	18	$3.01		$242.22
	133	22			
	60	36			
	1,571				
Concentrate dewatering	1,195	6	Labor....$0.66	10,230	Labor.....$104
	186	12	Lumber.. 0.63		Lumber..... 100
	134	16	$1.29		$204
	101	30			
	1,616				
Tailing dewatering	90	12	Labor....$2.01	33,496	Labor.....$99.00
	909	16	Lumber.. 1.51		Lumber... 74.40
	588	24	$3.52		$173.40
	70	36			
	1,650				
Total, all launders	7,888		Labor....$1.64	100,956	Labor....$128.23
			Materials. 1.27		Materials. 99.50
			$2.91		$227.73

culating loads of modern ball-mill practice, a wheel elevator, consisting of a large pulley with standard buckets attached, is sometimes used for low lifts; or a scraper, or screw conveyor may be used for sand return, if the horizontal carry exceeds the capacity of a wheel.

Centrifugal sand pumps are generally preferred, since they are more readily accessible and may be piped almost directly to the discharge point; the drawbacks to their use in such service are excessive wear with consequent lost time, but wear is minimized by rubber lining.

Inclined belt conveyors (see Sec. 18, Art. 6) for initial delivery of ore to the mill are discussed in Art. 1, and those for disposal of tailing in Art. 4.

When a belt conveyor is used to gain elevation, the horizontal displacement is from 2 1/2 to 3 times the height gained (18 1/2–22°), and considerable mill room or outside housing is required. Conveyors are ideal for distributing crushed ore into long bins or to a series of bins or tanks. For wet ore in cold climates, it may be necessary to reduce slope below 4 in 12 (18 1/2°) to prevent sliding.

Table 32 gives data required for selection of a conveyor. Distribution along the run of a conveyor system is usually done on a level section, by means of: (*a*) tripper on rails, hand-propelled or self-propelled with automatic reversal; (*b*) shuttle conveyor on frame or rail, discharging over end pulley, hand-propelled at occasional intervals; (*c*) scrapers on the belt, suitable for sticky materials but usually unsuitable for ore on account of high wear.

Inclined pan conveyors (see Sec. 18, Art. 7) are most used for elevating crude ore in lumps of such size (say 4-in. and over) that they would be injurious to rubber belts; incidentally they may serve as feed regulators for coarse crushers.

At United Comstock (*114 J 846, 117 J 516*) a 48-in. Stephens-Adamson pan conveyor 91 ft. long and rising 30 ft. (20°), driven at 9 to 15 ft. per min. by a 20-hp. variable-speed, slip-ring motor, carries 125 tons of mine-run ore per hr. At the Copper Queen concentrator are two 54-in. pan conveyors in parallel, each capable of carrying 1,800 tons of 8-in. ore per hr. (250 tons normal rate); length, 61 ft.; rise, 21 ft.; slope, 20° 10′.

Table 32. Belt conveyors

Belt, width by plies	Max. size, in.		Tons per hr. @ 100 ft. per min.	Slope from horizontal					Hp., max. @ 100 ft. per min.	Max. belt speed, ft. per min.
	Sized	Run-of-mine		— 0°	1/12 5°	2/12 9 1/2°	3/12 14°	4/12 18 1/2°		
				Maximum lengths, ft.						
12 × 3	1 1/2	2 1/2	24	1,080	510	320	240	200	2.2	300
16 × 4	2 1/2	4	43	1,100	530	330	250	200	3.9	300
20 × 4	3 1/2	5	70	875	400	250	190	150	4.9	400
24 × 5	4 1/2	8	100	950	420	280	200	160	7.3	450
30 × 6	6	12	160	820	390	250	185	150	10.9	500
36 × 6	7 1/2	15	220	740	340	220	165	130	13.1	500
42 × 7	9	18	300	725	335	220	165	130	17.9	600
48 × 8	10	20	400	735	340	220	160	130	23.3	600
Multiplier, 50 lb./cu. ft.			0.5	1.4	1.45	1.5	1.55	1.6	1.0	
Multiplier, 150 lb./cu. ft.			1.5	0.6	0.63	0.65	0.67	0.7	1.0	

NOTE: With anti-friction ball or roller bearings. Material, 100 lb. per cu. ft. Belt pull, 20 lb. per in. per ply.

For plain rollers, reduce max. lengths to following: horiz., 50%; 1/12, 60%; 2/12, 65%; 3/12, 70%; 4/12, 75%.

Power approximately proportional to actual length and to speed.

Tonnage proportional to speed.

Table 33. Belt-bucket elevators

[Malleable A or AA, or sheet-steel buckets spaced at twice projection]

Bucket, length × width, in.	Belt, width × plies *a*	Max. lift, ft.	Tons per hr. *b*	Head pulley		Hp. for max. lift *b*
				Diam., in. *c*	R.p.m. *d*	
24 × 8	26 × 10	85	155	60	33	26.0
	26 × 5	45	105	30	46	9.5
20 × 8	22 × 8	70	110	48	37	15.4
	22 × 4	35	75	24	52	5.2
16 × 8	18 × 8	70	90	48	37	12.6
	18 × 4	35	65	24	52	4.2
14 × 7	16 × 8	85	65	48	37	11.0
	16 × 4	45	47	24	52	4.2
12 × 6	14 × 8	90	50	48	37	9.0
	14 × 4	45	34	24	52	3.1
10 × 6	12 × 6	70	35	36	42.5	4.9
	12 × 4	45	29	24	52	2.8
8 × 5	10 × 6	80	23	36	42.5	3.7
	10 × 4	50	19	24	52	2.0
6 × 4	7 × 5	80	14	30	46.5	2.3
	7 × 3	40	10	18	60	0.8

a If it is desired to use heavier belt than the tabular value, in order to prolong life, head-pulley diameter should be changed correspondingly. To calculate the new value, first calculate a new maximum lift on the proportion:

$$\frac{\text{New maximum lift}}{\text{Tabular maximum lift}} = \frac{\text{New plies}}{\text{Tabular plies}}$$

Next determine percentage proportion of actual lift to new maximum lift, and estimate pulley diameter from note *c*.

b Tonnage and horsepower based upon buckets:

25% full of dry material, 100 lb. per cu. ft.; or

50% full of dry material, 50 lb. per cu. ft.; or

40% full of water or somewhat smaller amounts of pulp.

c For less than max. lift, diameter of head pulleys may be as follows:

70% max. lift, 5 in. per ply; 50% max. lift, 4 1/2 in. per ply;

25% max. lift, 4 in. per ply; 10% max. lift, 3 in. per ply.

d Speeds are for centrifugal discharge.

Bucket elevators (see also Sec. 18, Art. 12) are used for dry ore when the lift required for a given horizontal run is more than can be obtained with a simple inclined conveyor, and the elaborate zigzag of a multiple conveyor system is undesirable. For coarse wet pulps they compete with centrifugal sand pumps. In such duty they have the advantage of nonclogging and less wear, but they are more expensive to install, they must lift several feet above the discharge point, they must run substantially vertically in order to utilize reasonably full bucket volume, they occupy much floor space and mill volume, and much of the repair work must be done at the top. As a consequence, most designers install them only when use of a pump threatens almost certain trouble from clogged lines. For thin pulps of fine ore, pumps are substantially always used in preference to elevators. It is important to provide means for emptying the boot of an elevator when repairs are needed; such means should be so placed that the discharged material can be sluiced or easily transferred by other means to an adjoining elevator.

Belt-bucket elevators for wet work have the advantage over chain-bucket elevators of requiring no difficult and expensive lubrication and of having fewer wearing and friction-producing surfaces. The capacity of a given belt, however, is limited by its adhesion to the head pulley; this can be augmented by a wrapping of less slippery material around the pulley. Table 33 gives data necessary for selection of belt-bucket elevators for either wet or dry service.

Chain-bucket elevators (Sec. 18, Art. 12), in spite of their multiplicity of wearing and breaking elements, can be used satisfactorily for dry work but must then be lubricated with heavy grease to minimize the effect of grit; their capacity is limited only by the size of bucket that can be supported. Certain types have a pronounced advantage in being able to receive or discharge at a number of points in their travel, thus combining the functions of elevator and conveyor.

In one 250-ton mill, a single Peck conveyor-elevator was devised to perform all the following operations: (*a*) receive crushed ore *via* belt conveyor from a sampler; (*b*) elevate and deliver this ore, at will, into smelter bin, mill bin, storage bin for any class of ore (with the aid of a distributing belt conveyor), or bins for doubtful ore (pending assay); (*c*) withdraw doubtful ore from bins and deliver to smelter, storage, or mill bins; (*d*) withdraw ore from any storage bin (with the aid of a belt conveyor) and deliver to smelter bin or mill bin. See also UTAH APEX, p. 20–42.

Sand pumps. (See Sec. 18, Arts. 17, 18.) Centrifugal pumps for elevating gritty pulp must be specially lined, and even this affords little protection to the shaft, which is invariably a source of trouble and weakness. Introducing water under pressure around the shaft is a partial remedy but is not reliable and may be objectionable because of increased pulp dilution.

Dredge-type pumps with metal liners are used to some extent, but at considerable liner and "time-out" expense, and, when soft packing is used, with packing and shaft troubles. Pumps in which the rubber is vulcanized onto the shell and/or runner are being used increasingly. The Wilfley pump, which has a centrifugal seal and automatic check for sealing the shaft at shut-downs is most used, but, having no suction, requires a surge box or its equivalent to give a 3- to 4-ft. pressure head.

At the Clifton mill of ARIZONA COPPER CO., an Aldrich plunger pump, specially designed as to valves and plunger clearances, was used to dispose of table and vanner tailing. At MAGMA COPPER CO., all mill concentrate (5% >20-m., 63% <200-m.), derived about equally from tables and flotation, is pumped in the form of a thickened pulp (70% solids) to filters at the smelter, which discharge cake directly into the smelter bins, thereby dispensing with at least one handling (*J. W. Thompson, PC*). The pipe line is 4 in. diameter, 2,760 ft. long, and rises to height of 92 ft. near its middle point with slopes of 7°. No trouble has been experienced from sedimentation so long as the pulp consistency is held at 70% solids. A 4-in. Wilfley pump, driven at 1,600 r.p.m. by a 75-hp. motor, delivers 165 g.p.m. of this pulp, equivalent to 60 tons solids per hr. The operating costs per ton of concentrate (dry) in 1925 were: repair parts, 3.00¢; labor, operating, and repairs, 1.94¢; power, 0.60¢; total, 5.54¢.

Air lifts (see Sec. 18, Art. 21) for elevating ore pulps in process are satisfactorily employed in the NEVADA CONSOLIDATED, CHINO, RAY, NEW CORNELIA, and COPPER QUEEN mills, and in the older types of cyanide plants.

Skips are used for elevating roll products to screens at two points in the intermediate-crushing department of the ALASKA-GASTINEAU mill (*63 A 488*). The product from the primary rolls, set at 1-in., is hoisted in four skips of 5-ton capacity; that from the secondary rolls, at 10-m., in ten skips of the same size. The lift is 100 ft. in both cases. The skips are operated automatically and in counterbalance by a 75- to 135-hp. hoist motor for each pair; plow-steel rope is flat, 3/8 × 5-in. The loading gate is operated by a compressed-air cylinder controlled through a 3-way valve actuated by the descending skip; high-pressure water can also be used for operating the gate. Loading time is governed by an oil dashpot, which also throws the motor switch. Loading takes 11 sec., and the complete cycle for two skip loads is 1 min. 50 sec. The cost of operation compares favorably with that of dry elevators; maintenance is 0.9¢ per ton milled.

7. DRIVING POWER FOR MILLS

Individual power requirements for commonly employed machines, operating under stated conditions, are given in connection with the descriptions of the various machines. Tables 34 and 35 give the total motive power (installed or used) at several mills of representative types.

Table 34. Power consumption at typical mills

Plant	Process	Tons per 24 hr.	Distribution of power, kw.-hr. per ton milled						
			Mesh crushed, % <200	Crushing and handling	Grinding and classifying	Process, flotation or cyanide	Water, dewatering, tailing disposal	Misc.	Total
American Metal	Flotation	650	50	6.2	10.0	8.8	0.2	2.0	27.2
American Zinc	Flotation	2,000	.....	.....	.....	.....	.....	.....	13.9
Antomok	Cyanide	775	63	.....	.....	.....	.....	.....	19.8
Bunker Hill & Sullivan	Flotation	1,200	66	2.1	14.8	4.9	.....	2.8	.....
Britannia *a*	Flotation	6,500	40	2.7	7.8	1.4	0.7	0.2	12.8
Cananea *a*	Flotation	2,400	.....	1.05	7.7	3.7	2.4	0.5	15.3
Cardinal	Flotation	300	61	3.6	15.9	2.5	1.0	3.5	26.4
Climax *a*	Flotation	12,500	.....	2.1	5.6	1.5	0.2	3.3	12.7
Copper Queen	Flotation	4,300	74	1.05	9.0	1.7	1.7	0.3	13.7
Dayton	Cyanide	160	.....	2.3	10.7	5.2	2.9	1.7	22.8
Demonstration	Cyanide	200	.....	.....	.....	.....	.....	.....	24.0
Eagle Picher	Flotation	400	.....	2.8	6.2	4.0	2.0	1.6	16.6
East Malartic	Cyanide	1,000	75	1.43	.....	.....	.....	.....	15.73
Engels *a*	Flotation	1,100	65	3.5	12.1	3.7	0.6	0.1	20.0
Federal M. & S.	Flotation	1,250	81	0.4	16.8	20.0	2.9	0.8	40.9
Getchell	Roast & cyanide	700	.....	.....	.....	.....	.....	.....	26.0
Gold Standard	Cyanide	250	.....	1.8	15.3	2.53	.....	2.46	22.8
Haile	Cyanide	160	85	.....	.....	.....	.....	.....	18.25
Homestake	Amalgamation & cyanide	3,800	50	2.7	8.0	1.43	1.3	0.4	13.8
Inspiration	Flotation	18,000	.....	0.45	8.3	2.0	1.9	0.4	13.0
London	Gravity & flotation	225	.....	1.3	4.6	3.4	0.6	0.8	11.0
Magma	Flotation	750	57	2.2	7.5	2.4	0.8	.....	20.4
Matahambre	Flotation	1,200	44	2.0	8.2	3.8	1.3	.....	15.3
Miami Copper	Flotation	18,000	51	1.7	6.1	2.4	1.1	0.06	11.4
Morenci *a*	Flotation	5,000	72	2.8	7.5	1.5	.....	2.4	14.2
Nacozari *a*	Flotation	2,500	58	0.82	11.4	1.1	2.2	0.6	16.2
Nevada, Hayden *a*	Flotation	8,900	62	3.7	3.7	1.8	1.5	0.35	11.0
Nevada-Mass	Gravity, flotation & magnetic	250	.....	.....	.....	.....	.....	.....	17.0
Normetal	Flotation	500	85	2.15	19.5	8.6	.....	.....	34.18
Old Dominion *a*	Flotation	1,300	52	2.5	8.9	2.7	1.5	0.4	16.0
Pend Oreille	Flotation	600	.....	6.7	11.4	8.5	0.8	0.3	27.7
Peñoles	Cyanide	50	.....	1.2	24.0	7.9	3.6	4.0	30.5
Peru	Flotation	330	.....	1.6	15.8	10.1	2.2	1.9	31.6
Pickle Crow	Amalgamation & cyanide	400	80	1.42	15.0	.....	.....	.....	23.32
Silver King	Flotation	900	51	1.8	6.9	10.1	2.4	4.7	26.0
Tennessee	Flotation	1,250	.....	.....	.....	.....	.....	.....	22.5
United Verde *a*	Flotation	1,500	74	.....	9.8	4.2	1.1	1.3	.....
Utah Copper; 2 mills *a*	Flotation	30,000	68	3.5	7.5	4.9	0.52	0.65	17.1
Weepah	Cyanide	300	.....	1.2	10.6	6.4	.....	2.0	22.0

a I.C. 6792.

Line-shaft drives are used at small mills operated from a central power unit and at large motor-driven mills operating long blocks of similar machines having relatively small power requirements. It is substantially impossible to avoid a certain number.

Installation of line-shaft drives. For the elements of design, refer to mechanical-engineering handbooks (Kent, Marks, etc.; see also *107 J 1182*). The following general

suggestions refer particularly to ore-dressing works. (*a*) Shafts should have a wide margin of strength above that required for transmission alone; this is to provide against abnormal loads on pulleys due to shrinkage of damp belts and excessive shortening of belts to take up slack. (*b*) Pulleys, couplings, and clutches should be closely adjacent to bearings; the end of an oiled bearing, however, should lie 1 to 2 in. outside the nearer edge of an adjoining pulley, so that oil drippings will not fall on belt or pulley. (*c*) Hangers with ball-socket journal boxes are as satisfactory as pillow blocks for shafts of moderate sizes, up to 2 $^{7}/_{16}$ in. Larger shafts should be carried in pillow blocks; and for extra heavy service, a shaft should be mounted near the ground, on concrete piers if possible. (*d*) Ball-socket, or other self-aligning pillow blocks and journal boxes should always be installed for long shafts, and preferably also for short ones. (*e*) Ring-oiling journal boxes are satisfactory for general service; roller or ball-bearing journals are best for heavy duty; in dusty places, heavy-grease lubrication or grease-packed sealed bearings should be used. (*f*) Leather belts are admissible only in permanently dry places. Canvas belts deteriorate with moisture and lack pliability in large sizes. Rubber-covered belts give the best service in all parts of a wet mill; the most satisfactory weights are: 4-ply for 4- and 6-in. widths; 6-ply for 8- to

Table 35. Installed horsepower at cyanide mills

Plant	Process	Tons per 24 hr.	Installed horsepower									
			Crushing and handling	Grinding and classifying	Thickening	Filtering	Agitating	Precip'n	Tailing disposal	Misc.	Total	Per 24 hr.-ton
DeSantis.....	Cyanide	150	48	128	8	48	24	4	.....	89.5	349.5	2.34
East Malartic...	Cyanide	1,050	602	615 *a*	19	146	58	27	7.5	127.5	1,602.0	1.52
Gunnar Gold....	Cyanide	150	43	154	14	34	21	6	5	27.5	304.5	2.03
Kerr Addison....	Cyanide	650	459	497.5	28.5	138.5	62	27	.....	83	1,295.5	2.00
Lebel Oro.....	Cyanide	80	53.5	77	12	34	30	4	5	10.25	228.75	2.86
Morris Kirkland.	Cyanide	150	72	156	8	39.5	31	8	7.5	19.5	341.5	2.27
Sladen Malartic.	Cyanide	500	193	472.5	10	44	8	37.5	10	6.5	781.5	1.57
Uchi.....	Amalgamation & cyanide	500	331	460	17	51	62	27	.....	76	1,024.0	2.06

a 75% <200 mesh.

12-in.; 8-ply for 18-in. (*g*) Vertical belts should be avoided. Quarter-turn belts are admissible in sizes up to 8-in. and are unavoidable in rare instances. The minimum length between centers for belts without tightening idlers should be five times the diameter of the larger pulley. (*h*) Tightening idlers give good service, when needed, but require endless belts, since no form of lacing or coupling has proved satisfactory in this service; endless belts of leather can be spliced by gluing on the premises (*107 J 1132*) but endless rubber belts can be made only at the factory. (*i*) Chain drives or V-belts are useful for transmissions too short-centered for flat belts or where the desired speed ratio would require too small a pulley at one end; also for transmitting small power at low speed in dusty places. Their efficiency is high, and as they require no tension on the slack side, the journal friction at both ends is less than that caused by a short, tight belt.

Stopping and starting from line shafts. Tight-and-loose pulleys with a belt shifter are suitable for machines of relatively small power requirements, up to 25 or 30 hp., with belts up to 8 in. wide. Dental or jaw clutches for throwing the load on a moving shaft can be used safely for speeds under 30 r.p.m. Clutch pulleys are unsatisfactory where their power is likely to be unutilized for considerable periods, owing to rapid wear of the bushings; this is particularly objectionable in case of a stationary pulley riding on a moving shaft, since the wear will then be eccentric. Friction-clutch couplings, of band, jaw, or disk types, connected with a short jackshaft, or with a quill, and supported by adequate journal boxes, are much better than clutch pulleys. The quill system is well adapted to driving a row of machines from a long main shaft.

Mechanical transmission in some form is necessary between the motor and the driven machine. The type selected depends upon the nature and source of power, the nature and operating requirements of the driven machinery, speed, starting characteristics, and cost.

Long belts are efficient, but they may occupy space needed for other purposes. The belt span should not be less than five times the diameter of the larger pulley, and the more nearly horizontal the better; inclinations up to 60° are allowable.

Short belt, with a tightening idler, permits the motor to be placed at either side or above or below the driven pulley, with a clear distance as short as 2 or 3 ft. between faces of pulleys; endless belt is practically unavoidable. V-belts are much better.

Slack belt, with a swinging tension idler, was formerly the standard method of driving individual stamp batteries operated by a single line shaft; this practice is now becoming obsolete, modern stamp mills using an individual motor for every five or ten stamps.

Chain drive is as efficient mechanically as a short belt with tightener and has the advantage of producing less journal friction in both sprocket shafts. The shaft must be accurately aligned and so mounted that the chain may be tightened. Wherever possible, vertical chain drives should be avoided and the machines should be mounted so that the chain may be conveniently taken off and replaced without undue loss of time. For this reason the sprockets should not be too close to walls or other machines.

Spur gearing is an accepted method of driving tumbling mills. Owing to the impossibility of preventing some longitudinal motion in the mill, which will be transmitted to the pinion shaft, a motor cannot safely be rigidly connected to the shaft, but must drive through a flexible coupling; or by belt or chain, if further reduction of speed is desired.

Herringbone gear is more expensive than spur gears, but permits larger speed reduction and is sufficiently more efficient in power transmission to pay for itself easily in tube- and ball-mill drives where the motor is direct-connected to the pinion shaft.

Worm gear with high ratio of speed reduction is applied to such slow-moving apparatus as thickening tanks and, with a lower reduction ratio, to head motions of unit-driven tables and for conveyors. For driving inclined conveyors and all forms of bucket elevators, worm-gear drive avoids the necessity of safety devices to prevent back travel on stopping.

Bevel gears are found chiefly in gyratories, Chilean mills, trommels, and old-type M.S. flotation cells; they are usually a source of annoyance, and are to be avoided wherever possible.

Speed reducers are efficient and convenient, and are in everyday use. Spur or herringbone reducers are often interposed as a direct connection between the motor and the main-gear pinion shaft for driving tube and ball mills. Motor and gearbox should be mounted and aligned on a common base plate with a flexible coupling between gearbox and pinion shaft. Worm-and-wheel speed reducers are available for smaller powers and for high-ratio reductions; they are convenient for elevator and conveyor head drives. A flexible connection either in the form of a coupling or a chain drive is also necessary. Any type of gearbox used should be totally enclosed, dustproof, and oil flooded.

V-ropes. These represent the greatest single advance in belt transmission of power in recent years. They consist of grooved sheaves, with a suitable number of fabric and rubber "ropes" or belts of a cross-section to fit the grooves. They permit considerable speed reduction, and are efficient at short center distances. Under severe load conditions the ropes may slip; this constitutes a safety factor to prevent serious damage from overload.

Power transmission units (GEARED MOTORS) consist of a combined totally enclosed and oil-flooded train of gears, and an electric motor; they are frequently used for driving conveyors, elevators, diaphragm pumps, and other low-power machines. Geared motors are gradually replacing slow-speed motors in combination with individual speed reducers for sizes up to 75- and 100-hp.

Pivoted motors with flat-belt drives, such as the American or Rockwood, are pivoted or hinged so as to provide uniform tension on the belt under varying conditions of load. Such drives, like V-rope drives, can be operated on short centers, are suitable for various sizes of machinery, and provide a good safety factor should the driven machine stall for any reason, since the belt usually runs off the driven pulley.

Direct connection between driving and driven machine makes a compact and efficient arrangement. Proper flexible couplings between the two shafts must be provided to reduce shocks due to sudden loads, and to correct any small errors of alignment. Such drive is more troublesome to change than other types when the driven speed must be varied. Direct connection is particularly applicable for such high-speed machinery as centrifugal pumps, fans, and blowers.

Individual motor drives are almost universally installed at modern mills, for all classes of equipment except tables and other small-power apparatus which can be closely grouped into rows or blocks and easily driven from line shafts. The advantage of individual drives is mainly their ease of installation; they make accurate alignment unnecessary, avoid overhead supports for line shafts, and are easy to maintain. For driving heavy equipment, individual motors offer the same advantages, with the added economies introduced by operating at higher efficiencies and power factors.

Motor characteristics. Large ore-dressing plants in North America operate, almost without exception, with alternating current. This form of energy is generally available and the apparatus is cheaper and simpler than direct-current apparatus. Direct current is utilized for special operations such as crane haulage, electrolytic refining, and battery charging and when accurate adjustment of motor speed is desired; it is obtained from a separate generator, a motor-generator set, mercury arc, or other form of electronic rectifier. For outside haulage, standard voltage is usually 550; inside, 250 or 275; for power and special applications and for battery charging, the direct-current generator can be designed to give any voltage which best meets local conditions.

Frequency has been standardized at 60-cycle for most of the United States and 50-cycle for the rest of the world. There is some economy in transmitting and transforming 25-cycle current, but it is unsuitable for lighting without frequency increase. Old government plants and a number of private users with large power units are on 25 cycles.

Static-electricity apparatus and machines calling for speeds higher than 3,600 r.p.m. usually are supplied with high-frequency current from special motor-generator sets. Unidirectional currents for precipitation are supplied by rectifiers.

The 60-cycle motors have been standardized in the United States as to shaft sizes, bases, and other external dimensions, so that interchange between most makes is simple and convenient. Some adjustment in sizes by a plant designer is advisable to permit replacement from idle motors in case of a breakdown.

Phase. Practically all motors larger than 1/2-hp. in American mills are on three-phase current. The small motors used on samplers, reagent feeders, and the like are preferably single-phase, wired for either 110 or 220 volts. Three-phase motors in the same sizes cost more, and delivery is slow. The UNIVERSAL, a small motor, is wound for either 110 or 220 volts to operate on a-c. or d-c. current; it is used generally on portable tools. Speed may be as high as 15,000 r.p.m. without regard to frequency, but it falls off rapidly with increase in load.

Table 36. Standard a-c. voltages for various uses

Volts	Phases	Applications
110	1	Lights, portable tools, motors 1/2 hp. and less.
220	1	Small machines, 2 hp. and less.
220	3	General city industrial installations.
440	3	Motors 1–25 hp., or larger.
2,200 and higher		Induction motors 25–50 hp. and larger. Synchronous: One or more large motors for power-factor correction. See also transmission voltages, Table 38.

Standard a-c. voltages, together with typical applications, are given in Table 36.

Low-voltage operation causes higher operating losses and higher cost of conductor, but equipment costs less than for high-voltage. In general, the economical voltage depends upon the load factor, the power consumed, and the distance between generator and point of consumption. (See Table 38.) Distribution and interruption of current in a large mill are difficult at low voltage, and expansion is expensive; nevertheless, the usual tendency is to adopt too low rather than too high voltage.

Motors in ore dressing plants are usually 440-volt in the United States or 550-volt in other countries when only one voltage is used. Normal practice is, however, to use 2,200 to 3,300 volts for motors of 50- or 100-hp. and up and the lower voltage for the smaller motors.

Motor speed. High-speed motors are the lighter and cheaper and are usually more efficient and have higher power-factor than low-speed. Speeds recommended for general mill service are shown in Table 37.

Table 37. Motor speeds, a-c.

No. of poles	Speeds, r.p.m.				Max. hp. of motor advisable for these speeds	
	60-cycle		50-cycle			
	Synchronous	Running	Synchronous	Running	Belted	Geared
2	3,600	3,500	3,000	2,920	.....	.....
4	1,800	1,745	1,500	1,450	40	5
6	1,200	1,160	1,000	970	75	20
8	900	870	750	730	125	50
10	720	700	600	580	.....	75
12	600	580	500	485	.....	.....
14	515	500	430	417	.....	.....

Geared motors are preferred to slow-speed motors. They have built-in helical or herringbone gears for medium and ordinary low-speed units and worm gears for units of very low speed. They are built for all speed reductions, and from small sizes to above 100-hp. Some operators prefer motors directly connected through flexible couplings with gear reducers because a motor breakdown does not throw the speed-reduction unit out of service.

Power rating. Highest efficiency and best power factor are obtained by operating a motor continuously at as near its rated capacity as possible. Hence motors for driving stamp batteries, ball, rod or pebble mills, compressors or blowers, pumps, and other steady-load apparatus should have capacities corresponding as closely as practicable to the power requirements. For driving coarse crushers, rolls, tables, agitators or settling tanks, elevators, conveyors, and other equipment subject to irregularity in feed or to excessive and variable friction a motor should have a power rating 50 to 100% in excess of the normal requirement. The bad effect of so many over-sized motors on the power factor of a whole mill is not unduly serious, because in most mills, particularly those compelled to grind fine, a large part (50 to 75%) of the total mill power is applied to steady-load equipment by efficient motors.

Table 38. Characteristics and applications of polyphase a-c. motors (*after Fick, 143 #6 J 65*)

Polyphase type	Ratings, hp.	Speed regulation	Speed control	Starting torque	Pull-out torque	Applications
General-purpose squirrel cage.	0.5 to 200 hp.	Drops about 3% for large to 5% for small sizes.	None, except multi-speed types, designed for 2 to 4 fixed speeds.	200% of full-load for 2-pole to 105% for 16-pole designs.	200% of full-load.	Constant-speed service where starting torque is not excessive. Fans, blowers, rotary compressors, centrifugal pumps, flotation machines, wood-working machines, machine tools, line shafts.
Full-voltage starting, high starting torque, low starting current, squirrel cage.	3 to 150 hp.	Drops about 3% for large to 6% for small sizes.	None, except multi-speed types, designed for 2 to 4 fixed speeds.	250% of full-load for high-speed to 200% for low-speed designs.	200% of full-load.	Constant-speed service where fairly high starting torque is required at infrequent intervals with starting current of about 400% full load. Reciprocating pumps and compressors, conveyors, primary and secondary crushers, pulverizers, agitators, groups of small equipment that can be started under small load.
Full-voltage starting, high starting torque, high slip, squirrel cage.	0.5 to 150 hp.	Drops about 7 to 12% from no load to full load.	None, except multi-speed types, designed for 2 to 4 fixed speeds.	300 to 315% of full load, depending upon speed and rotor resistance.	300%. This motor will usually not stall until loaded to its maximum torque, which occurs at standstill.	Constant-speed service and high starting torque if starting not too frequent, and for taking high peak loads with or without flywheels. Punch presses, die stamping, shears, bulldozers, bailers, hoists, cranes, elevators.
Wound-rotor or slip-ring, external-resistance starting.	0.5 to several thousand.	With rotor rings short-circuited, drops about 3% for large to 5% for small sizes.	Speed can be reduced to 50% of normal by rotor resistance. Speed varies inversely as the load. *b*	Up to 300%, depending upon external resistance in rotor circuit and how distributed.	200% when rotor slip rings are short-circuited.	Where high starting torque with low starting current or where limited speed control is required. Fans, centrifugal and plunger pumps, compressors, conveyors, hoists, cranes, ball mills, gate hoists.
Synchronous. *a*	25 to several thousand.	Constant.	None, except special motors designed for 2 fixed speeds.	40% for slow speed to 160% for medium speed 80%-pf. designs. Special high-torque designs.	Unity-pf. motors 170%; 80%-pf. motors 225%. Special designs up to 300%.	For constant-speed service, direct connection to slow-speed machines and where power-factor correction is required. Adaptable to high voltages. Compressors, blowers, centrifugal pumps, stamp batteries, tumbling mills provided with friction or magnetic clutches to apply load gradually.

a A SUPER-SYNCHRONOUS OR BUILT-IN CLUTCH TYPE synchronous motor is for a load that requires high starting duty but low and constant speed, *e.g.*, ball and tube mills. One form is started as a slip-ring motor and at full speed has the characteristics of the synchronous motor.

b For heavy duty when some speed adjustment is necessary. These motors have the characteristics not of d-c. adjustable-speed motors but of d-c. motors with armature control, the current consumed in the resistance to reduce speed being wasted.

Table 39. Characteristics (*a*) and applications of d-c. motors, 1- to 300-hp. (*after Pick, 143 #6 J 65*)

Type	Starting duty	Maximum momentary running torque	Speed regulation	Speed control *b*	Applications
Shunt-wound, constant-speed. Shunt-wound, adjustable-speed.	Medium starting torque. Varies with voltage supplied to armature, and is limited by starting resistor to 125 to 200% full-load torque.	125 to 200%. Limited by commutation.	8 to 12%. 10 to 20%, increases with weak fields.	Basic speed to 200% basic speed by field control. Basic speed to 600% basic speed (lower for some ratings) by field control.	Drives where starting requirements are not severe. Use constant speed or adjustable speed, depending on speed required. Centrifugal pumps, fans, blowers, conveyors, elevators, wood- and metal-working machines.
Compound-wound, constant-speed.	Heavy starting torque. Limited by starting resistor to 130 to 260% of full-load torque.	130 to 260%. Limited by commutation.	Standard compounding 25%. Depends on amount of series winding.	Basic speed to 125% basic speed by field control.	Drives requiring high starting torque and fairly constant speed. Pulsating loads. Shears, bending rolls, plunger pumps, conveyors, crushers, etc.
Series-wound, varying-speed.	Very heavy starting torque. Limited to 300 to 350% full-load torque.	300 to 350%. Limited by commutation.	Very high. Infinite no-load speed.	From zero to maximum speed, depending on control and load.	Drives where very high starting torque is required and speed can be regulated. Cranes, hoists, gates, bridges, car dumpers, etc.

a Table shows average values for standard motors.

b Minimum speed below basic speed by armature control limited by heating.

Characteristics and applications of motors in milling plants are shown in Tables 38 and 39.

At UNITED COMSTOCK, operating at 440 volts exclusively (stepped from 60,000 and 2,300 volts), the tube mills are driven by slip-ring motors with reversible controllers; more than 90 other motors in the plant (some of 200-hp.) are of squirrel-cage type, with automatic compensators and push-button starters (*114 J 846, 117 J 516*). At HONDURAS ROSARIO, mainly on 2,200-volts, 20 stamps are driven by a 200-hp. synchronous motor with belted exciter, started by a 35-hp. induction motor and automatic synchronizer; three tube mills each have a 75-hp. slip-ring motor with flexible coupling and reversing starter (no clutch); all plunger pumps have slip-ring motors; the agitator compressor has a 75-hp. squirrel-cage motor. At PANDA six synchronous motors (three of 350 and three of 525 hp., each at 6,600 volts) are used to drive 2-stage centrifugal pumps for water supply of 10,000 g.p.m. against a head of 500 ft. (*29 MM 137*). The ALASKA-JUNEAU mill contained several unusual features, made possible by an abundant supply of power from its own generators and those of the adjoining ALASKA-TREADWELL mine (*120 P 251*). Each of the two coarse-crushing sections contained one 36 × 48-in. jaw crusher and two No. 9 gyratories; these three crushers were driven by clutch pulleys on one shaft direct-connected to a 350-hp. synchronous motor of 2,200 volts and 360 r.p.m., with direct-connected exciter. The starting torque was sufficient to start all connected equipment without releasing the clutches. The slow speed of this motor obviated countershafts and other reducers, space for which was wanting. Fine crushing, in two stages, was done in 12 ball mills (8 × 6-ft.) each driven by one 225-hp. motor, and 12 tube mills (6 × 12-ft.) each with one 150-hp. motor; all of these motors were of squirrel-cage type, 2,200-volt, 435-r.p.m., specially designed for large starting torque. The mills had friction clutches, but it was seldom necessary to use them; motors were thrown directly on the full line voltage by special circuit breakers and without compensators, but extra-heavy feeder lines were installed. The unbalancing caused by these motors was compensated by the synchronous motors at the coarse crushers. Two centrifugal pumps for mill water, 3,000 g.p.m. each, were each driven by a 400-hp. direct-connected squirrel-cage motor, not specially designed for high starting torque; a synchronous torque 33% of the full-load torque proved satisfactory. These motors were excited by independent d-c. circuit. At the SANTA BARBARA mill (*112 J 1050*), with 19 motors aggregating 590 hp., three slip-ring motors of 100 hp. each are used for coarse crushing and rod-mill grinding, but all others are of the squirrel-cage type.

Conductors are of the following classes: (*a*) Exposed bare conductors for ground connections; (*b*) exposed insulated conductors mounted on insulators, for low and medium potentials; (*c*) exposed bare conductors mounted on insulators, for high potentials; (*d*) small insulated conductors in iron conduit; (*e*) large insulated conductors in fiber or tile duct.

Short-circuit currents and their effects. An installation must be constructed proof against any reasonably conceivable abnormal condition. The most important, and possibly most frequent, cause of trouble is short-circuiting, despite most elaborate precautions. Hence all measures within reasonable expense should be employed to limit the destructive effects. The initial short circuit usually results from failure of insulation. Any circuit or piece of apparatus subject to short circuits should be removed from service as soon after the short circuit has occurred as is reasonably possible.

Four important provisions against short-circuiting must always be made: (*a*) Material of fireproof or fire-resisting nature should be used whenever possible; if not possible, apparatus and conductors should be segregated and enclosed by suitable barriers or cells, so that a fire resulting from a short circuit will be confined to a small part of the installation. (*b*) All apparatus and material should have ample strength to resist the mechanical stresses resulting from the abnormal flow of current during a short circuit. (*c*) All circuit breakers that may be called upon to open a short circuit should have ample capacity to rupture the maximum current that can flow at the instant they are called upon to operate. It is necessary not only that breakers be amply insulated to operate safely at the installation potential, and that the contacts have sufficient area to carry the maximum current during normal operation, but it is also necessary to know the maximum short-circuit current that they may be required to open and to be certain that each breaker selected has ample rupturing capacity to open that circuit safely. This is one of the most important points to be considered, but unfortunately it is the one most frequently neglected, often with disastrous results. (*d*) Current should not be allowed to flow through a short circuit any longer than can be avoided.

Bare conductors are usually employed when the voltage exceeds 15,000. These consist of solid wire, copper tubing, aluminum in bars or structural shapes, or iron pipe. The use of tubing makes it possible to reduce the number of expensive insulators used for support. It is expensive and quite unnecessary to insulate such high-voltage conductors because when properly installed they are widely spaced and kept well away from the ground.

Transmission. Elementary data for rough estimates are given in Tables 40 and 41.

Table 40. Distances of transmission

Distances to which 100-kw. three-phase current can be transmitted over different sizes of wires at different potentials, assuming an energy loss of 10% and a power factor of 85%.

Number B. & S.	Area in circular mils	Voltages					
		2,000	3,000	4,000	5,000	6,000	8,000
		Distance of transmission in miles for various potentials at receiving end					
6	26,250	1.32	2.98	5.28	8.27	11.9	21.1
5	33,100	1.66	3.75	6.64	10.4	15.0	26.6
4	41,740	2.10	4.74	8.40	13.2	19.0	33.6
3	52,630	2.54	5.96	10.2	16.6	23.8	40.6
2	66,370	3.33	7.51	13.3	20.9	30.0	53.3
1	83,690	4.21	9.48	16.8	26.3	37.9	67.4
0	105,500	5.29	11.9	21.2	33.1	47.7	84.6
00	133,100	6.71	15.1	26.8	42.0	60.4	107
000	167,800	8.45	19.0	33.8	52.9	76.2	135
0000	211,600	10.6	23.9	42.5	66.4	95.7	170
	250,000	12.6	28.3	50.3	78.7	113	201
	500,000	25.2	56.7	101	157	227	403

Number B. & S.	Area in circular mils	Voltages					
		10,000	12,000	15,000	20,000	25,000	30,000
		Distance of transmission in miles for various potentials at receiving end					
6	26,250	33.1	47.7	74.5	132	207	289
5	33,100	41.6	60.0	93.7	166	260	375
4	41,740	52.6	75.8	119	210	329	474
3	52,630	66.2	95.4	149	255	414	596
2	66,370	83.4	120	188	334	521	751
1	83,690	105	152	212	421	658	948
0	105,500	132	192	298	530	828	1,190
00	133,100	168	242	378	672	1,050	1,510
000	167,800	211	305	476	846	1,320	1,900
0000	211,600	266	283	598	1,060	1,660	2,390
	250,000	315	453	708	1,260	1,970	2,830
	500,000	629	907	1,420	2,520	3,930	5,660

Courtesy General Electric Co.

Table 41. Current in three-phase circuits with varying loads and voltages, 100% power factor

Volts	Kilowatts, amperes per phase				
	50	100	200	300	400
110	262.431	524.863	1,049.727	1,574.591	2,099.455
220	131.215	262.431	524.863	787.295	1,049.727
330	87.477	174.954	349.909	524.863	699.818
440	65.607	131.215	262.431	393.647	524.863
600	48.112	96.225	192.450	288.675	384.900
1,150	25.102	50.204	100.408	150.613	200.817
2,300	12.551	25.102	50.204	75.306	100.408
3,300	8.747	17.495	34.990	52.486	69.981
4,400	6.560	13.121	26.243	29.364	52.485
6,600	4.373	8.747	17.495	26.243	34.990
11,000	2.624	5.248	10.497	15.745	20.994
13,200	2.186	4.373	8.747	13.121	17.495
22,000	1.312	2.624	5.248	7.872	10.497
30,000	0.962	1.924	3.849	5.773	7.698
33,000	0.874	1.749	3.499	5.248	6.998
45,000	0.641	1.283	2.566	3.849	5.132
60,000	0.481	0.962	1.924	2.886	3.849
100,000	0.288	0.577	1.154	1.732	2.309

Volts	Kilowatts, amperes per phase				
	500	600	700	800	900
110	2,624.319	3,149.183	3,674.047	4,198.911	4,723.774
220	1,312.159	1,575.591	1,837.023	2,099.455	2,361.887
330	874.773	1,049.727	1,224.682	1,399.637	1,574.591
440	656.079	787.295	918.511	1,049.727	1,180.943
600	481.125	577.350	673.575	769.800	866.025
1,150	251.021	301.226	351.430	401.634	451.839
2,300	125.510	150.613	175.715	200.817	225.919
3,300	87.477	104.972	122.468	139.963	157.459
4,400	65.607	78.729	91.851	104.972	118.094
6,600	43.738	52.486	61.234	69.981	78.729
11,000	26.243	31.491	36.740	41.989	47.237
13,200	21.869	26.243	30.617	34.990	39.364
22,000	18.121	15.745	18.370	20.994	23.618
30,000	9.622	11.547	13.471	15.396	17.320
33,000	8.747	10.497	12.240	13.996	15.745
45,000	6.415	7.698	8.981	10.264	11.547
60,000	4.811	5.773	6.735	7.698	8.660
100,000	2.886	3.464	4.041	4.618	5.196

Courtesy General Electric Co.

Cable is used for interconnection of apparatus and generally for low-voltage distribution. That for interconnection should be of the best grade of material and installed in the best possible manner. The cost is but a small percentage of the total. Transmission cables may represent a considerable part of the total investment in electrical equipment when used for distribution of power to a number of isolated loads.

When large cables are multiplied to carry the current for low-voltage machines it is necessary to arrange and group the phases so that each conductor will have about the same reactance and thus the current will be properly apportioned between the different conductors in parallel. When dealing with large conductors, special care should be taken to support them rigidly so that they will not be torn from their supports should a severe short circuit occur.

Exposed cable runs. The best arrangement, provided the number of cables in close proximity does not make the group too congested or hazardous, is to use wires or cable insulated for full potential and rigidly supported on insulators good for full potential. This arrangement is safe, since each method of insulation affords full protection. Exposed runs are under constant observation. VARNISHED CAMBRIC is the most lasting insulation because it does not absorb moisture, like paper insulation, and does not deteriorate as rapidly as rubber. It should be thoroughly covered with a fireproof braid or tape to minimise communication between circuits in the event of a short circuit or ground on one circuit or conductor. A 3/32-in. asbestos tape with a flameproof braid covering gives excellent fire protection.

Cables in conduits or ducts should be stranded. Iron conduit is ordinarily used up to 4-in. diameter; above this size fiber or tile is satisfactory and less expensive. Iron should not be used with alternating current unless all conductors of the circuit are in the same conduit. Rubber-covered standard conductors with double waterproofed braid (or tape and braid) are generally used for conductors up to 600 volts and as large as 0000 B. & S. gage. Varnished-cambric insulation is by far the best for larger cables and higher voltages, provided it is covered with good weatherproofed braid for protection against abrasion. Cambric-covered cables may be run in fiber ducts, if they are carefully drained. Cables for main connections of considerable importance are frequently installed with insulation suitable for voltages 50% in excess of the rated voltage.

Lead-covered cable used on a-c. circuits should be of the multiple-conductor type. Eddy currents in the lead sheaths of single-conductor cables increase the energy losses. Single-conductor lead-covered cables should not, in general, be used for heavy a-c. circuits.

Armored cables and conduits. On d-c. circuits, where maximum copper area is desired, single conductors should be used. Single-conductor cable is preferable for low-tension d-c. mains on account of the simplicity of service connections. Concentric cables give maximum ampere capacity per duct for single-phase alternating current, but flat twin cables are usually more convenient and cheaper for mains and lines where the area is less than 250,000 circular mils. They are liable to kink and are not recommended in sizes larger than 250,000 circular mils. For two-conductor cables larger than 250,000 circular mils, either round cable (two conductors twisted together) or concentric cable is best. Triple conductor is almost a necessity in three-phase, a-c. work in order to avoid disturbance to parallel circuits and reduce loss in the lead sheath to a minimum. (If single-conductor lead-covered cables are used in a-c. circuits the sheaths should not be in contact nor connected by any low-resistance path.) Multiple-conductor cable is best for a number of small conductors run in one duct.

The cheapest cable insulation for UNDERGROUND CIRCUITS is paper, and it can be used safely when the lead cover is not subject to corrosion. The insulation on sizes smaller than No. 6 B. & S. is likely to be injured by sharp bending or handling, and for smaller conductors, rubber insulation is best. It is also best for cables placed in very wet ducts, where severe corrosion is to be expected.

Thickness of insulation is principally dependent on mechanical requirements with low-tension cables (less than 1,000-volt); for higher voltages the thickness is governed by the dielectric strength required. For 3-phase alternating current undergrounded or delta-connected, one-half the thickness of insulation should be put around each conductor and the other half surrounding the three conductors. This gives the same total thickness of insulation between conductors and between each conductor and ground. For 3-phase circuits Y-connected, with the neutral grounded, the thickness of the outer jacket may be reduced to roughly one-half the thickness of the insulation on the individual conductors, since the pressure to ground is approximately 60% of the pressure between conductors.

Finish on cables in clean, dry ducts or wooden boxes underground or in any situation where the cable is not subject to mechanical injury or liable to corrosion should be plain lead. For wet ducts, or other places where corrosion (but not mechanical injury) is to be feared, and for burying directly in clean earth, with a protecting plank or tile laid above the cable, use a jute and asphalt jacket over the lead. When mechanical injury is to be guarded against, use band-steel armor over the jute and asphalted lead. If the cable is not to be supported practically continuously, use wire-armored instead of band-steel armored cables. Such cable may be suspended for any practical distance, practically the entire strain being taken by the wire armor.

Table 42. Allowable current in copper wire and cable

Size B. & S. gage	Circular mils	Amperes		Circular mils	Amperes	
		Rubber insulation	Other insulation		Rubber insulation	Other insulation
18	1,624	3	5	250,000	237	350
16	2,583	6	10	300,000	275	400
14	4,107	15	20	350,000	300	450
12	6,530	20	25	400,000	325	500
10	10,380	25	30	450,000	362	550
8	16,510	35	50	500,000	400	600
6	26,250	50	70	600,000	450	680
4	41,740	70	90	700,000	500	760
2	66,370	90	125	800,000	550	840
1	83,690	100	150	1,000,000	650	1,000
0	105,500	125	200	1,250,000	750	1,180
00	133,100	150	225	1,500,000	850	1,360
000	167,800	175	275	1,750,000	950	1,520
0000	211,600	225	325	2,000,000	1,050	1,670

Current-carrying capacity of an insulated conductor is determined within practical limits by the maximum temperature the insulation will withstand. The temperature should not be above 85° C. for saturated paper, 75° for cambric, and 60° for rubber. The limit is lower for high voltage. The following maximum safe temperatures at the surface of the conductor in the cable are recommended in the Standardization Rules of the A. I. E. E.: For impregnated-paper insulation, $85-E$; for varnished-cambric insulation, $75-E$; for rubber compound insulation, $60-0.25E$, where E = the effective operating voltage in kilovolts between conductors.

Table 43. Conductor capacities of conduit or tubing

[Rubber-covered conductors, 600-volt insulation. *National Board of Fire Underwriters, 1938 Edition*]

Size of conductor wire	Number of conductors in one conduit or tube								
	1	2	3	4	5	6	7	8	9
	Size of conduit or tube, in.								
No. 13	1/2	1/2	1/2	1/2	1/2	1/2	1/2	1/2	3/4
14	1/2	1/2	1/2	1/2	3/4	3/4	3/4	1	1
12	1/2	1/2	1/2	3/4	3/4	1	1	1	1 1/4
10	1/2	3/4	3/4	3/4	1	1	1 1/4	1 1/4	1 1/4
8	1/2	3/4	1	1	1 1/4	1 1/4	1 1/4	1 1/4	1 1/2
6	1/2	1	1 1/4	1 1/4	1 1/2	1 1/2	2	2	2
4	3/4	1 1/4	1 1/4	1 1/2	2	2	2	2	2 1/2
2	3/4	1 1/4	1 1/2	1 1/2	2	2	2 1/2	2 1/2	2 1/2
1	3/4	1 1/2	1 1/2	2	2	2 1/2	2 1/2	3	3
0	1	1 1/2	2	2	2 1/2	2 1/2	3	3	3
00	1	2	2	2 1/2	2 1/2	3	3	3	3 1/2
000	1	2	2	2 1/2	3	3	3	3 1/2	3 1/2
0000	1 1/4	2	2 1/2	2 1/2	3	3	3 1/2	3 1/2	4
Circ. mils									
200,000	1 1/4	2	2 1/2	2 1/2	3	3	3 1/2	3 1/2	4
250,000	1 1/4	2 1/2	2 1/2	3	3	3 1/2			
300,000	1 1/4	2 1/2	3	3	3 1/2	3 1/2			
350,000	1 1/4	2 1/2	3	3 1/2	3 1/2	4			
400,000	1 1/4	3	3	3 1/2	4	4			
450,000	1 1/2	3	3	3 1/2	4	4 1/2			
500,000	1 1/2	3	3	3 1/2	4	4 1/2			
600,000	2	3	3 1/2	4	4 1/2	5			
750,000	2	3 1/2	3 1/2	4 1/2					
900,000	2	3 1/2	4	4 1/2					
1,000,000	2	4	4	5					
1,500,000	2 1/2	4 1/2	5	6					
2,000,000	3	5	6						

The maximum safe continuous load for any given cable is higher with direct than with alternating current, but the difference is of slight practical importance for conductors less than 500,000 circular mils in area. The safe load is less for 60 cycles than for 25 cycles; less in the tropics than in temperate zones; it increases markedly in winter; it decreases with the number of loaded cables adjacent to each other; *e.g.*, the average safe load in a 4-duct line would be about 60% greater than in a 16-duct line; and cables immersed in water carry at least 50% more current than those buried in earth.

Table 42 shows the carrying capacity of different sizes of cables. The figures in the table are based on concentric stranded conductors. If solid conductors are used, reduce the current given (for 30° C. rise) by 7%. For two-conductor cables, either round or flat, decrease the current given for single conductor by 15%. For two-conductor concentric cables, decrease the current given for single conductor by 25%. For four-conductor cables, reduce the current given for three-conductor cables by 12.5%. For higher-voltage cable reduce table values by 1% for each 2,000 volts that the working pressure exceeds 3,000 volts; for example, 25,000-volt cable, 11% less than the tabulated values.

Conduit sizes. See Table 43.

Current in motor terminals. See Table 44.

Table 44. Current in motor terminals

[Approximate amperes per terminal for a-c. induction motors, for determining size of wires, capacity of fuses, and setting of circuit breakers]

Horsepower of motor	Voltage, three-phase				
	110	220	440	550	2,200
1	6.5	3.2	1.6	.....	.....
2	12	6	3	2.5	.....
3	17	9	4.5	3.5	.....
5	30	15	7.5	6	.....
7 1/2	45	22	11	9	.....
10	59	29	14	11	.....
15	84	41	20	16	4.5
20	.....	55	27	22	5.5
25	.....	62	31	25	7
30	.....	81	40	32	8
35	.....	94	47	38	9.5
40	.....	109	54	44	11
50	.....	127	64	52	13
75	.....	192	96	77	20
100	.....	248	124	100	25
150	.....	366	183	147	40
200	.....	475	237	192	49
250	.....	590	290	237	62
300	.....	700	350	285	74

For single-phase motors, multiply the current for three-phase motors by 1.73. For two-phase motors, multiply the current for three-phase motors by 0.886.

Power generation. The great majority of American ore-dressing mills of medium and large size operate electrically; public-service water-generated power is normally used.

Some typical transmission lines, mostly in the western U. S., are: Alma, Colo., 250 kw., 150 mi.; Boulder Dam, 165,000 kw., 287,000 volts, 310 mi.; Golconda, Nev., 1,000 kw., 220 mi.; Inspiration, Ariz., 16,500 kw., 54 mi.; Kellogg, Id., 1,200 kw., 80 mi.; Mascot, Tenn., 1,500 kw., 120 mi.; Mill City, Nev., 250 kw., 150 mi.; Mountain City, Nev., 500 kw., 100 mi.; Silver City, Nev., 210 kw., 40 mi.; Superior, Ariz., 500 kw., 70 mi.

Hydroelectric generators are rarely warranted for an individual mill of short or unknown life owing to the heavy expense usually required for storage reservoirs, although the generating station itself may be no more expensive than a steam plant of corresponding size.

On the rugged and rainy coasts of British Columbia and southern Alaska exceptionally favorable hydraulic conditions justified erection of water-driven generators by several large mining and milling companies. Total cost of hydroelectric plants (*ante* 1917), including dams, ditches, and all equipment, was estimated at $100 to $200 per kw. capacity (*Peele*). A hydroelectric plant is equal to steam and superior to gas-engine in reliability; the most common source of delay is ice at the intake; a long transmission line is, however, always subject to interruption.

Steam generation, in plants designed for the utmost efficiency, is the practice at many large mills in the United States. Steam generation is usually preferred at small mills, where first cost is more important than fuel economy. Coal or oil is used as fuel, depending upon availability; the convenience of the latter may offset higher unit cost. The plant should be designed to furnish power at a minimum cost per hp.-hr. delivered (not rated output),

Table 45. Typical steam plants; costs of installation and operation (including "all costs")

Type—location	Installation costs			Coal, cost/ton	Cost of operation	
	Total	Per kw.	Per hp.		Per kw.-hr.	Per hp.-day
Steam plants, recip. engines	.....	$90–140	$67–105	.....	.....	.....
Steam plants, turbines	.....	40– 90	30– 67	.....	.....	.....
Mt. Isa, 10,000-kw., turbo-gen.	$1,070,000	107	80	$10	0.67 ¢	12.0 ¢
Roan Antelope, 15,000-kw., turbo-gen	2,270,000	151.50	113	7.75	0.814	14.65
Trepca, 1,250-kw., turbo-gen.	177,000	141.50	105.50	2.50	1.174	21.1
Inspiration, 30,000-kw., turbo-gen	2,750,000	91.60	68.50	*a*	0.65	11.6
Indian Copper, 1,900-kw., turbo-gen	369,000	194	145	3.00	0.78	14.0
Cyprus Mines, 750-kw., recip.-gen	183,500	245	182.50	8.50	4.70	85.0

a Fuel oil @ $0.47 per bbl.

Table 46. Steam consumption of engines and turbines

Type	Boiler pressure, lb. per sq. in.	Horsepower	Pounds steam per hp.-hr. at full load
Engines			
Throttling, plain slide valve, noncondensing	100	50– 150	39–34
Automatic, plain slide valve, noncondensing	100	100– 300	29–26
Corliss, simple noncondensing	125	200– 600	22–21
Corliss, compound noncondensing	125	300– 900	19–18
Corliss, compound condensing	125	500– 1,500	14–13
Turbines			
Noncondensing	150	400– 600	27–25
Noncondensing	150	1,340– 4,700	25–21
Condensing	150	400– 800	14–13
Condensing	200–300	750– 4,500	12–11
Condensing	300–500	5,350–20,000	9– 8

Condensing water: temperature 75° F., for 2-in. vacuum, 55 times feed water.

including interest and amortization of plant within the life of the mill. The necessity for uninterrupted service may justify a greater outlay than would be warranted on grounds of fuel or labor economy.

The essential elements of a steam plant are boiler, engine, and feed-water pump; further equipment intended to economize fuel or labor, stated in the order in which it is usually adopted, is feed-water heater, compound engine, condenser, superheater, automatic stoker (*107 J 1121*). Fuel economy and reduced cost per unit of power generated are thus gained at the expense of simplicity (entailing more skilled supervision) and of original outlay. Turbines are cheaper and simpler than reciprocating engines, but they require more skilled supervision. The cost of typical steam-driven generating plants is given in Table 45; the approximate steam consumption of steam engines and turbines, in Table 46; and the calculated performance of various fuels and types of steam boilers in Table 47.

Table 47. Power-plant fuels; calculated performance, oil vs. coal vs. wood

[Feed water at 100° F.; steam at 100 lb. per sq. in.]

Fuels	B.t.u. per lb. fuel as fired	B.t.u. per lb. steam @ 100 lb. *a*	Pounds steam evaporated per lb. fuel, theor.	Fuel ratios, theor.	Small fire-tube, hand-fired	Medium fire-tube		Large water-tube, stoker-fired
						Hand-fired	Stoker-fired	
					Boiler efficiencies			
					50%	60%	70%	80%
					Actual pounds of steam delivered per lb. of fuel			
Fuel oil	19,000	1,120.8	16.90	100.0	.....	10.18	11.82	13.50
Good coal	14,000	do.	12.45	73.5	.....	7.47	8.73	9.98
Medium coal	12,000	do.	10.65	63.0	.....	6.40	7.45	8.50
Poor coal	10,000	do.	8.90	52.6	4.45	5.34	6.25	7.11
Lignite	7,000	do.	6.22	39.5	3.11	3.72	4.35	.....
Wood, fresh cut and wet, direct-fired under steam boilers	3,000	do.	2.68	15.8	1.34	1.61	.....	.....
Used in gas producers	2 to 2.3 lb. wood per hp.-hr., or approx. 1/3 to 1/4 that used under boiler for same hp.							

a For other steam pressures, B.t.u. per lb. of steam are: 25 lb., 1,101; 50 lb., 1,110; 100 lb., 1,120.8; 150 lb., 1,127; 200 lb., 1,131; 300 lb., 1,137; 500 lb., 1,140; all for saturated steam, and feed water at 100° F.

A Diesel-engine plant has about the same weight and cost, per unit of installed power, as a steam-engine plant of the more elaborate types; see Table 48. It is particularly noteworthy for its high fuel efficiency up to the safe limit, which is fixed by the weight of air that can be admitted to its cylinders, but it is incapable of carrying sustained overloads. It requires skillful supervision, and repairs and renewals constitute a large item of expense,

Table 48. Costs of internal-combustion engines (1938)

[All include starting equipment]

	Hp.	Cost, $ per brake hp.
Gasoline engines (only)	25– 300	18–20 *a*
High-speed oil engines (only)	25– 300	25–50 *a*
Slow-speed Diesel engines, exciter, generator and switchboard	300–2,000	75–85 *b*

1,200-hp. Deutz Diesel, 4-cycle, 6-cylinder, 720-r.p.m., complete with 150-kva. generator, exciter, and switchboard, installed in Canada, cost $11,060. Weight, 11,000 lb. (engine only).

125-hp. Deutz Diesel, 4-cycle, 750-r.p.m. engine for air compressor, installed in Canada, cost $5,500. Weight, 9,500 lb. (engine only).

a F.o.b. factory. *b* Erected.

which, however, can be diminished by regular replacement of worn valves, etc., before failure. Its best field is at plants of moderate size, where coal would be uneconomical and fuel oil expensive; its consumption averages only 30 to 40% of the amount required at a high-class oil-fired steam plant of corresponding size.

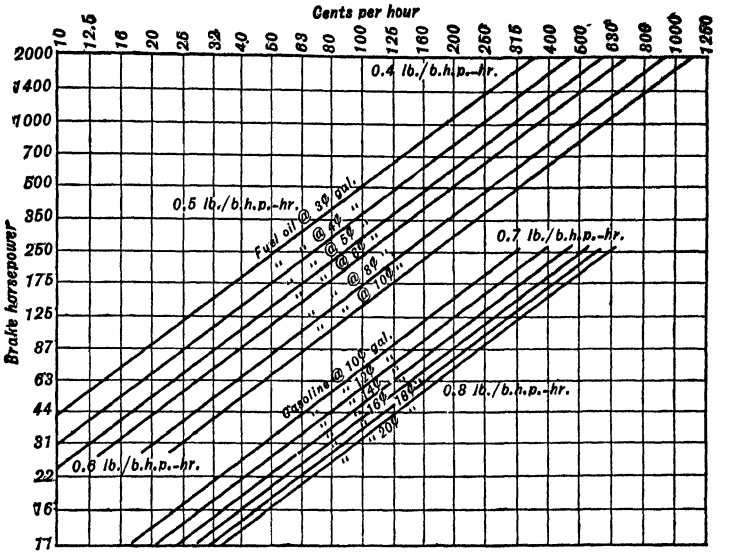

FIG. 29. Estimated costs of operating Diesel and gasoline engines.

Cost of Diesel-engine operation (also gasoline-engine) may be estimated from the diagram, Fig. 29, for various hp. and cost of fuel. They may be used down to 1/3 of the rated hp. per unit. Some examples from practice since 1925 are given in Table 49.

Table 49. Cost of Diesel power at mines (*after Thomas*)

Company	No. units	Total brake hp.	Cost fuel, ¢ per lb.	Fuel, lb. per hp.-hr.	Fuel, ¢ per hp.	Other costs	Total, ¢ per hp.-hr.	Cost erected
Wiluna G. M.	10	5,000	1.71	0.43	0.63	0.34	0.97	$528,000
Lake View & Star	2	8,000	1.78	0.38	0.68	0.38	1.06	.....
Kalgoorlie Power	4	3,560	1.82	0.414	0.75	0.15	0.90	.....
Cyprus G. & Asb.	6	1,735	1.64	0.41	0.68	0.36	1.04	.....
Christmas	4	1,800	0.62	0.54	0.34	0.29	0.84	.....
Sulphur Bank	1	120	0.80	0.50	0.40	0.23	0.63	18,000
Phelps Dodge, Arizona	.....	.....	.....	.....	0.41	0.21	0.62	.....
Iron Mountain	2	1,040	.....	0.50	.....	.....	0.99	.....
Kennecott	3	1,500	0.64	0.54	0.35	0.33	0.68	100,000
Base Metals	3	680	1.10	0.46	0.51	0.24	0.75	120,000
S. A. G. & P. Co. (Colombia, S. A.)	1	320	4.30	0.45	1.93	.....	2.20 *a*	.....
Hudson River Stone	3	1,980	0.50	.....	.....	.....	0.93	.....

a Estimated.

Several gold plants (350 to 1,000 tons per day) in the Philippine Islands drive the equipment with motors from Diesel-engine generators at costs of approximately 1¢ per hp.-hr.

The following data, in addition to those in Tables 48 and 49, may be used for estimating approximate costs.

Notable installations of Diesel-driven generators were made by the Phelps Dodge Corp. at Tyrone, Morenci, Globe, and Nacozari. Those at TYRONE, at 5,950-ft. elevation (*119 P 869*), were vertical, 2-cycle, with 5 cylinders of 20.6-in. diameter and 26-in. stroke; speed, 180 r.p.m.; rated at 1,250 brake hp. at sea level. The scavenger pump was large enough to maintain a pressure of 2 to 3 lb. per sq. in. in the cylinder at the beginning of the stroke, thereby simulating sea-level conditions; this plan increased fuel consumption per available hp. but made the total cost lower by permitting investment in a smaller engine. A compressor for the oil injector, and to store compressed air for starting, was direct-connected to the engine. Each engine was direct-connected to a 60-cycle alternator of 815 to 850 kv.-a. capacity. Fuel was of the same quality as that used under steam boilers, California 14° to 20° Bé. occasionally

carrying 2% sulfur; some oil of 24° Bé. was fed just before stopping an engine, so that its first supply on starting would ignite more readily. The heavier oil was warmed by coils carrying cooling water from the exhaust jackets of the engines. Fuel consumption, per hour, varied directly with the load, from 175 lb. at 100 kw. to 420 lb. at 600 kw.; above that point, consumption increased somewhat more rapidly, being 570 lb. at 800 kw. A steam plant with the same output as the Diesel engines at Tyrone was estimated to require five times more water, 2 1/4 to 2 1/2 times more fuel, but only 1/3 as much expense for repairs and replacements. Costs for labor and miscellaneous supplies were practically identical. At IRON MT., Mo., two 500-hp. Diesel engines drove two 436-kv.-a. generators at 2,300 volts. The cost of the whole plant (1923), including building and all accessories, erected and running, was $100,000. Operating at half capacity, with oil at $1.65 per bbl., the cost was 1.78¢ per kw.-hr. including interest and amortization (15 yr.). BETTY O'NEAL mill (and mine), Lewis, Nev., operated two Fairbanks-Morse 6-cylinder semi-Diesels of 300-hp., each direct-connected to a 200-kw. 460-volt alternator of 60 cycles. Fuel was 27° Bé. distillate, costing 7.1¢ per gal. at the mine; each engine consumed 17 g.p.h. The total power cost was $6 per hp.-mo. (*117 J 449*). Cooling water from the mine was chemically softened before use.

Diesel stand-by units are sometimes installed to provide against power interruption on long transmission lines; also, as at MT. ISA, for preliminary operations, with stand-by service in mind.

Producer-gas engines are sometimes used where wood (or a poor grade of coal or peat) is plentiful and cheap, water is scarce, and other fuels are costly. The following examples of such practice are abstracted from Thomas (*Power Plants in Metal Mines*).

At SONS OF GWALIA, West Australia, altitude 1,300 ft., electric current is generated at 40 cycles, 550 volts, by one 4-cylinder 500-hp., one 6-cylinder 750-hp., and one 2-cylinder 400-hp. engine, supplied by 3 producers (with one in reserve). These have 35 sq. ft. of grate area each and consume 21.4 lb. dry wood per sq. ft. per hr. Compressors supplying 2,000 cu. ft. of free air per min., at 85 lb. gage, are run by two 4-cylinder 500-hp. engines supplied by 3 producers, 20 sq. ft. of grate area each, consuming 28.8 lb. dry wood per sq. ft. per hr. Gas has a thermal value of 122 to 132 B.t.u. per cu. ft. Combined engine exhausts at 1,040° F. go to 4 boilers (1,900 sq. ft.) and 4 pre-heaters (950 sq. ft.) generating steam for hoisting; these not only save 200 to 220 tons firewood per mo. but also serve as silencers. Wood consumption is 3.7 lb. per kw.-hr. Cost per kw.-hr. (1934) was 0.67¢ for fuel, 1.36¢ total. At LONELY REEF, Bulawayo, So. Rhodesia (altitude 4,200 ft.), electric current is generated at 50 cycles, 550 volts, by four 4-cylinder 225-hp. engines. A 1,000-cu. ft. compressor is driven by a similar engine. Gas (140 B.t.u. per cu. ft.) is supplied by 4 updraft suction producers (1 in reserve), with wet scrubbers, tar extractors, and 2 dry scrubbers (scrubber water 50 g.p.m. per producer). Wood consumption is 3.4 lb. per kw.-hr. Cost per kw.-hr.: fuel, 0.42¢; total, 0.80¢. At NEW GOLDFIELDS, Venezuela (altitude 570 ft.), electric current is generated at 50 cycles, 3,300 volts, by two 6-cylinder 400-hp. engines (with 1 stand-by and 1 under repair), supplied with gas by eight 300-hp. updraft producers, each with wet scrubber, tar extractor, and 2 parallel dry scrubbers. Gas temperature, 86° F. Cooling-water consumption, 452 g.p.m. Wood consumption, 3.98 lb. per kw.-hr. Cost per kw.-hr.: fuel, 0.67¢; total, 1.36¢. At GLOBE PHOENIX, So. Rhodesia (altitude, 4,050 ft.), electric current is generated at 60 cycles, 550 volts, by three 6-cylinder 375-hp. engines, and power for a compressor for 1,710 cu. ft. of free air per min. at 100 lb. gage is supplied by two 3-cylinder 185-hp. engines, all served by 7 Crossley Type G bituminous-coal producers with scrubbers and tar extractors. Consumption of 13,000-B.t.u. coal is 1.8 lb. per kw.-hr.; cost per kw.-hr.: fuel, 0.50¢; total, 0.89¢.

8. LIGHTING

Window lighting can serve the usual mill 6 to 10 hr. per day. Modern mills have windows spaced closely along the walls, with full lines at the roof breaks; they should be high enough to pass light well into the mill. Glass areas sometimes run as high as 40% of the floor surface. On the other hand, window areas dissipate much heat, and, since 1 watt of Mazda lighting is equivalent to 1 sq. ft. of glass, the economical balance in cold northern climates with short winter days may well tilt in favor of artificial lighting in daytime. The balance may tilt similarly where air conditioning against summer heat calls for insulated walls in the usual window spaces. Even in mills with ample window space, artificial light is necessary in many parts of the building during the daylight hours for operating safety and for efficient inspection. The amount of light that should be supplied is that which simulates indoor daylight of suitable intensity. With Mazda lamps, 1 watt per sq. ft. of floor area is the minimum recommended for discriminating details; for general illumination half this value will be sufficient.

Methods of illumination (*123 P 751, 61 EW 628, 70 EW 6, 201; 72 ER 907, 9 Trans. Illum. Eng. Soc., 814*). In a small mill, 50-watt lamps or larger, with reflectors and waterproof sockets, are suspended by cords, wherever needed; they should be within reach for easy cleaning and replacement, and the number should not be stinted. With power at 1¢ per kw.-hr., the total cost for lighting with Mazda lamps (including replacements) is 3¢ to 4¢ per 1,000 candle-power-hours. One c-p. = 0.75 watt in this type of lamp. Globes and reflectors should be kept clean. Drop lamps are necessary for close work, but produce

glare, which reduces acuity of sight and tires the whole body; breakage of lamps is liable to be excessive and the cost of wiring is high. General illumination with a relatively small number of large, efficient lamps is now in extensive use for all types of industrial lighting and is well suited to large ore-dressing plants. When the arrangement of a mill is such that the greater part of the area needs only relatively low general illumination while a few operations require much higher intensity, the most economical plan is to use overhead lights with proper reflectors for uniform minimum intensity, and supplement these with local lamps placed wherever close inspection of machines or products is necessary. It is probably an economy to install nearly double the number of sockets that will be needed in normal use, to provide for emergency lighting and to have spares currently available in place. Theftproof lock sockets will prevent too great loss. In some of the most modern plants, portable lamps are issued in the same way as special tools, and conveniently located wall outlets are installed for attaching them; continuous use of such lamps should, however, be discouraged by providing sufficient regular lights to furnish illumination of machines from more than one direction. Yards, particularly around doors and at special working spaces, should be flood-lighted.

Lighting circuits may be either a low-voltage (110-volt) system on a separate transformer or individual dynamo or a high-voltage series type or multiple system. The series circuit is more efficient, lower in first cost, and easier to maintain than multiple systems. The layout is the same as for multiple

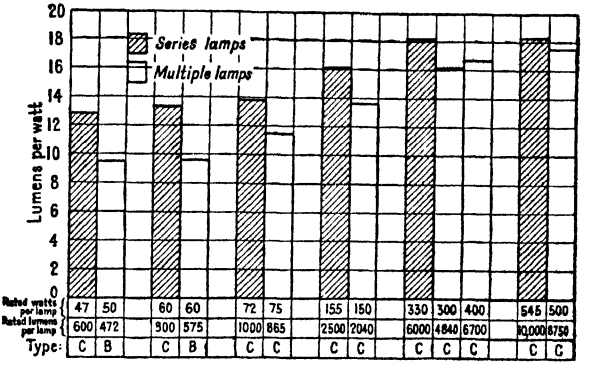

FIG. 30. Relative efficiencies of multiple and series Edison Mazda lamps.

circuits, except that series sockets, lamps, and reflectors such as are used for street illumination are necessary. Lead-covered, single-conductor cable. No. 8-gage, is most economical, since it can be run on girders, etc., without insulators or pipe conduits. For comparative efficiencies of the two systems, see Fig. 30. Series circuits are fully safeguarded from the effect of high voltage coming from an open-circuited secondary, lamp burnout, etc., by suitable protective devices. Lamp operation is protected by a film cutout in each socket. In case a lamp burns out, the film cutout is punctured in the socket, which permits current to flow through the circuit without interrupting the operation of other lamps.

The series circuit may be found advantageous for the large units; but since portable tools are unsuitable for use on series circuits, and since they are most used near the zones of maximum light intensity and are most easily energized from the lighting circuit, it may be found advantageous to use the multiple system for such areas. The two circuits resulting would insure some light in case of failure of either from internal causes.

Lamps. The inside-frosted Mazda C lamp is most useful for general illumination; it is efficient and sturdy; the smooth white mineral coating on the lower portion of the bulb diffuses the light, eliminates glare, and makes the shadows soft and feathery rather than dense and harsh. Lamps larger than 300-watt have Mogul bases, requiring large sockets; Daylight glass is probably best for these. Standard voltage is 115; 220-volt lamps are obtainable but are not so sturdy.

Metal-vapor lamps are being increasingly used (1938) in mines, mills, and industrial plants generally. Mercury and sodium are the usual metals employed.

Mercury lamp, when used in combination with approximately 25 to 50% Mazda lighting, works out very satisfactorily for general milling areas and for crushing plants, motor-generator rooms, underground machine shops, pipe tunnels, and places where a high degree of lighting is necessary for maintenance of equipment or for safety, and for flotation rooms, sorting plants, and electrolytic zinc and copper refineries, where a high degree of color differentiation must be accomplished. These lamps come only in

large sizes, approximating 10,000 lumens; each such lamp should be supplemented with approximately 100 to 200 watts of Mazda light in order to avoid stroboscopic effects.

Table 50. Power consumption of lamps

Type	Watts	Lumens	Volts
Mazda	100	1,530	115
	200	3,400	115
	300 *a*	5,900	115
	500 *a*	10,000	115
Mazda Daylight (blue)	100	988	.....
	200	2,210	.....
	300 *a*	3,590	.....
	500 *a*	6,370	.....
Mercury-vapor	250	7,500	.....
	400	16,000	.....
Sodium-vapor	225 mult. series	10,000	110/120
	195	10,000	31.4

a Mogul base.

Sodium-vapor lamp, similar to the mercury lamp except that the light is yellow in color, has a high penetrating factor. It is particularly useful in zinc-casting plants and other smelters, especially around reverberatory furnaces and converters. The light intensities used may be as low as 5 to 8 foot-candles; if the intensity is increased to approximately 10 foot-candles, daylight visibility is effected.

The cost of operation of both sodium and mercury lamps is approximately 1/3 that of standard Mazda lamps for the same degree of illumination; the life of both is much longer, provided they are burned nearly continuously, *i.e.*, not turned off and on frequently; they cannot be used where voltage variation exceeds 2 1/2%.

The sodium lamp is especially good for lighting open-pit operations, haulageways and trackways, yards and other outdoor places, owing to high penetrating factor and low operating cost. The first cost of a 10,000-lumen mercury-vapor or sodium-vapor lamp is approximately $50.

Power consumption of lamps of different types is given in Table 50.

Mercury tubes have proved satisfactory at MIAMI and other large mills. Sodium lamps have been used extensively at Hudson Bay. Iron arcs are used at the Franklin plant of the New Jersey Zinc Co. to show apple-green willemite on the tables; also by the Nevada-Mass. Co. for recognition of scheelite, in the same manner.

Reflectors. Dome reflectors are ordinarily used for general or localized-general illumination. Deep-bowl reflectors tend to reduce the light on vertical surfaces; they are especially serviceable for low-hung lamps. Angle reflectors are used where high illumination is required on vertical surfaces and where lighting units must be located on the side walls. Additional means of diffusing the light are sometimes used, *e.g.*, a polished metal cap placed over the lower half of the lamp bulb, or opal-glass caps or a metal shield on a level with the filament. These devices tend to eliminate sharp shadows. Prismatic-mirrored and dense-opal deep-bowl reflectors are also used. Enclosed or semi-enclosed units of opalescent or diffusing glass produce excellent diffusion with but slight sacrifice of efficiency.

Lamp spacing. The standard dome reflector and bowl-enameled Mazda C lamp has become almost standard equipment for mill lighting. Assuming that this unit gives out a certain definite amount of light, the advisable spacings of different sizes are as shown in Table 51.

Table 51. Spacing of lights

Ceiling height, feet	Unit lights, watts	Maximum spacing, feet
Rough work, requiring no discernment of detail; general illumination of approximately 2.5 foot-candles:		
Less than 12...	75	12
	100	15
	150	18
12 to 16.....	100	15
	150	18
	200	22
More than 16..	150	18
	200	22
Work requiring observation of machine operation; general illumination of approximately 5 foot-candles:		
Less than 12...	100	10
	150	13
12 to 16.....	150	13
	200	16
More than 16..	200	16
	300	20
Work requiring discrimination of detail; general illumination of approximately 8 foot-candles:		
Less than 12...	100	8
	150	10
	200	13
12 to 16.....	150	10
	200	13
More than 16..	200	13
	300	16

9. HEATING

Heating of mills in cold climates is necessary not only for comfort but to avoid delays due to freezing. Practically every important mill in the United States and Canada, except a few in the Southwest, makes special provision for heating during the winter; in small mills stoves are sufficient, but

general practice is to install radiators, steam, water or electrically heated, with or without auxiliary air circulation.

The walls, roof, and floor of a mill building give up heat to their surroundings at rates proportional to the temperature gradients and to the conductivities of the respective enclosing materials, as shown in Table 52. For windows, calculate as though unbroken wall, then add the glass loss at the difference in coefficient for wall and glass.

Table 52. Heat losses through building enclosures

	K *a*
Floor: double, plastered below	0.05
Floor: plank, insulation filled	0.10
Floor: plank, cinder filled; 3-in. plank; tile plaster ceiling	0.15
Floor: dirt; asphalt; concrete on brick	0.2
Walls: 24-in. brick; 20-in. hollow tile; 40-in. concrete	0.2
Floor: ceiled below; flooring on concrete	0.25
Roof: metal on tongue-and-grooved boards	0.25
Walls: 16-in. brick; 12-in. hollow tile; 34-in. concrete; 44-in. masonry	0.25
Floor: planked ceiling; tile on cement	0.33
Roof: shingle on sheathing; tar and gravel on 1-in. tongue-and-grooved boards	0.33
Walls: lath and plaster, two sides 12-in. brick, 8-in. hollow tile; 22-in. concrete; 30-in. masonry	0.33
Floor: single 3/4-in. plank; hollow tile on concrete	0.40
Roof: slate on tongue-and-grooved boards	0.40
Walls: 8-in. brick; 4-in. hollow tile; 16-in. concrete; 20-in. masonry	0.40
Roof: concrete; tar paper under sheathing	0.5
Walls: clapboard, lath and plaster; double glass; 4-in. brick; 2-in. hollow tile; 12-in. concrete; 16-in. masonry	0.5
Walls: lath and plaster one side; 8-in. concrete	0.67
Walls: tile on sheathing; sheathing-paper lined; 4-in. concrete	0.8
Walls: single glass	1.0
Walls and roof: sheathing and corrugated iron	1.25
Walls and roof: corrugated iron, unlined, tight	1.5
Walls and roof: corrugated iron, loose	2.0

a B.t.u. per sq. ft. per hr. per degree F. temperature difference.

In addition to the above, the following infiltration losses should be added for 5 mi. per hr. wind velocity, and 60° F. temperature difference: Fixed wood sash, 23 B.t.u. per hr.; double wood sash, 45 B.t.u. per hr.; double doors or steel sash, 9 B.t.u. per hr.; outside doors or steel sash, 18 B.t.u. per hr.

To estimate K for more than one wall or heat-conducting body, apply the following formula, where K_1, K_2, etc., are the above or similar tabular values:

$$K = \frac{1}{\frac{1}{K_1} + \frac{1}{K_2} \cdots + \frac{1}{K_n}}$$

Steam-heating. An average radiator surface of 1 sq. ft. (with steam at 5-lb. pressure) suffices for 150 to 200 cu. ft. of mill depending on the severity of the climate. Based on the area of radiators alone, the boiler rating should be 1 hp. per 50 sq. ft.; including the radiating surface of supply- and return-steam lines, 1 boiler hp. per 80 sq. ft. of total radiating surface is usually ample. Radiators should be trapped and condensate sent back to the boiler, either directly or by way of a sump and pump.

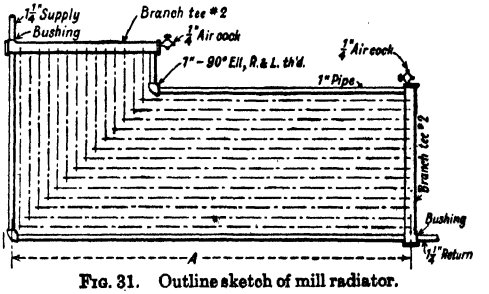

FIG. 31. Outline sketch of mill radiator.

Radiator shown in Fig. 31 uses only stock materials (headers are cast iron), is easily and quickly constructed, and has ample allowance for unequal expansion; the latter provision could also be made, with parallel headers, by a right-angled bend, setting the radiator in a corner. For stated lengths A, the amounts of 1-in. pipe and the total radiating areas are as given in Table 53.

A continuous horizontal-pipe radiator, with U-joints, requires no left-hand threading, and is cheap and easy to construct, but where a large heating effect is required this design is objectionable because condensed water may overload the lower runs and retard steam circulation. A pipe grid providing parallel flow between parallel headers requires right- and left-hand threading, is difficult to make up tight, and is likely to develop leaks on account of unequal expansion. Welded grids require skillful welders.

Table 53. Data for radiator shown in Fig. 31

A, feet	1-in. pipe, linear feet	Radiation, square feet	Cost (1924), complete
10	168	56	$63.25
12	200	67	67.05
14	232	78	70.85
16	264	89	74.65
18	296	100	78.45

Radiator fittings	Connecting fittings
2 Crane c.-i. branch tees No. 2, with 16 @ 1-in. branches, 1/4-in. tap at inlet end, 1 1/2-in. tap at outlet.	2 Kewanee unions, 1 1/4-in.
2 Bushings, 1 1/2- to 1 1/4-in.	2 Gate valves, 1 1/4-in.
2 Air cocks, 1/4-in.	3 Standard 90° ells, 1 1/4-in.
16 @ 1-in. 90° ells, right- and left-hand threaded.	2 Street 90° ells, 1 1/4-in.
8 Hook plates for 1-in. pipe, 4 hooks each, spaced 2 1/2-in.	(The above fittings allow for a swing joint in the supply line, and one ell in the return line.)

Hot-water heating permits a relatively low temperature heating medium. The ordinary mill building is well suited for gravity hot-water heating, the boiler being placed at the bottom of the mill. Such a system will circulate by gravity against a friction head of 0.1 to 0.2 ft.; a circulating pump increases this head to 10 or 20 ft., and increases the velocity 10 times, making the system as responsive as steam and permitting the use of smaller pipes.

Radiation from radiators or uncovered piping without air blast is about 3 B.t.u. per sq. ft. per hr. per deg. F. temperature difference.

Unit heaters have been almost universally adopted within the past 10 yr. for heating large areas, such as mill buildings. They comprise a fin radiator heated by steam or hot water over which air is driven by a disk fan, or, in the cabinet types, by a centrifugal fan. Deflectors throw the air toward the floors, or horizontally as far as 100 ft. Motors are usually single-phase, 1,800-, 1,200-, 900-, or 600-r.p.m., either 1-, 2- or 3-speed. Heat delivery is substantially proportional to fan speed. Table 54 gives data on selected sizes. Factory cost is $1.50 to $1.00 per 1,000 B.t.u. except for the smaller sizes, which cost somewhat more.

Table 54. Unit-heater data

Width × height, in.	Lb. condensed per hr. (2-lb. steam)	Air entering @ 60° F.			Motor hp.
		Cu. ft. per min.	Temp. leaving, deg. F.	B.t.u. per hr.	
Disk-fan type					
12 × 14	32	500	120	30,000	1/30
15 × 18	65	1,000	120	63,000	1/10
18 × 21	115	2,000	100	110,000	1/6
23 × 26	155	2,300	120	150,000	1/6
29 × 33	310	5,000	115	300,000	1/2
Cabinet-blower type					
74 × 60	500	8,000	116	500,000	2
92 × 72	800	13,000	116	800,000	3
108 × 84	1,100	18,000	116	1,100,000	3

For hot water or higher-pressure steam, multiply B.t.u. and condensation by the following factors, which are about proportional to temperature differences:

	Temp. °F.	Multiplier
Hot water	180	0.75
2-lb. steam	217	1.00
20-lb. steam	260	1.20
100-lb. steam	338	1.60

Thermostatic control is advantageously applied to unit heaters. The heating rate with the motor stopped is approximately 15 to 25% of that with the motor up to speed, so that all control can be on the electrical circuit and is correspondingly inexpensive.

Stoves may be used as unit heaters in small mills by supplying an electric fan with deflectors to throw the heat downward along the floors toward the active areas, or a hot-air furnace with a fan in the duct system may be used; when equipped with a stoker it can use slack coal and requires little attention.

Electric heating. Unit electric radiation-type heaters are practical where power costs are low. A late form of this has been installed at the South Main shaft of the HUDSON BAY MINING & SMELTING CO. The heaters consist of a totally enclosed resistance unit operating at approximately red heat. Heat transfer is produced by air from a large fan. The heaters can be made in any size from 10 kw. up to 500 kw. Installation and operating costs are the lowest now obtainable with electric energy. Such heaters utilize 600 volts or less, 3-phase, and cost about $20 per kw. installed. (1 kw.-hr. = 3,413 B.t.u. per hr. radiation.)

Electric steam generators have been used for heating and other process steam in localities where electric power is relatively cheap or fuel is abnormally costly. These generators are of resistance or direct-immersion type. The resistance type is used for small installations, 20 to 75 boiler-hp.; initial cost is approximately $40 per boiler-hp., not including installation. The immersion type is used for duties of 300 to 10,000 boiler-hp.; the cost ranges from about $15 per boiler-hp. for the smaller sizes to less than $5 for the large. These units produce steam for 0.2¢ per kw.-hr. with coal @ $12.50 per ton. Either type can be made fully automatic. HUDSON BAY MINING & SMELTING CO. uses the direct-immersion type for general heating, using 150-lb. steam.

Cost of heating the average mill building with extreme temperatures of 25 to 35° below zero F. will be about 5¢ per ton of ore, charged against the year's tonnage. If buildings are brick, with other equally good insulating features, the cost is reduced about 50%. On the assumption that the period of time during which heating is required is proportional to the extreme temperature drop below 60° F., the following cost of heating may be applied: if to −30° F., 5¢ per ton; if −21°, 4¢; −9°, 3¢; if to +4° F., 2¢; +20°, 1¢ per ton.

10. FIRE PROTECTION

Fire protection in a wood-frame mill should include as many of the following precautions as necessary: (*a*) Portable extinguishers, desirable in all mills. (*b*) Automatic water sprinklers, advisable in all wooden mills of large extent. If sprinkler lines are liable to freeze, the dry system of control must be installed. (*c*) Fire mains under constant pressure and used for no other purpose, with hydrant valves at frequent and convenient intervals, to which hoses and nozzles or monitor nozzles are permanently connected; this system is considered adequate for small mills, and may render the installation of a sprinkler system unnecessary. (*d*) Well-organized and regularly trained force of fire fighters, without whom the most elaborate system of equipment would be of little value in an emergency. (*e*) Cleanliness in all respects, but particularly in the use of oils and similar materials, with special precautions against accumulations of inflammable debris.

General. Because of wide variation in fire protection requirements, caused by differences in geographical and plant conditions, each case should be studied carefully by competent authorities. In general, fire insurance rates have a more or less uniform base, with credits for favorable factors and penalties for unfavorable conditions. Advice on the problem generally, as well as detailed specifications for the most suitable installation in a given mill, may be obtained gratis from: government boards of fire underwriters; local insurance inspectors; reputable fire insurance companies, all of whom maintain engineers for this express purpose.

Portable extinguishers are particularly useful because of ready availability to the operating crew at all times. In an inflammable mill, the points requiring most protection are: vicinity of oil feeders and storage, boiler rooms, store rooms, electrical switchboards, change rooms, and the neighborhood of equipment requiring copious lubrication.

Soda-acid, 2 1/2-gal. extinguisher is satisfactory for small fires in wood, rubbish, etc., not impregnated with oils or grease, but should not be used against fire in proximity to high-tension electric circuits; it must be protected against freezing. It is made also in 20- and 40-gal. sizes mounted on wheels.

Anti-freezing, 2 1/2-gal. tank, contains calcium chloride solution, which is discharged by pressure generated by an automatically ignited cartridge; this has the same limitations as the soda-acid type, but does not require protection against cold.

Foamite extinguishers in 2 1/2-gal. hand tanks and 40-gal. wheel-mounted tanks, contain solutions of aluminum sulfate, sodium bicarbonate, and a froth stabiliser (licorice extract). On mixing these solutions by inverting the tank, a frothy stream is discharged. The smothering effect is due to a blanket of CO_2 held in a mass of bubbles made tough by aluminum hydroxide. It is suitable for ordinary fires, and particularly for those involving oils and grease, but is not safe for fires near high-voltage electric circuits, although the stream of foam, after the momentary discharge of ungasified solution, is a poor conductor. Foamite does not injure electric insulation; tanks must be protected from freezing.

Carbon tetrachloride is the only fire-extinguishing medium that can be used with safety around high-tension electric circuits. For other fires, including those in oil or grease, it is also serviceable, but

the small size of the containers adopted by manufacturers (usually 1 or 1 1/2 qt.) limits its effectiveness on a fire that has gained much headway, while the necessity for pumping the container is also a drawback to its efficiency. The tetrachloride supplied by extinguisher manufacturers contains ingredients to reduce its freezing point, and no protection against cold has to be given; no other than the special tetrachloride should be used. In the vicinity of electrical equipment or oil supplies, a unit of two tetrachloride extinguishers should be provided for 2,500 sq. ft. of floor, and within 15 ft. of any specially hazardous point.

Automatic sprinklers, held closed by fusible links, are recognized by insurance companies as the most efficient form of protection against incipient fires. If sprinklers are installed, the standpipe and hose equipment may safely be reduced. The following recommendations apply particularly to the type of construction commonly found in wood-framed mills (*after Regulations of the National Board of Fire Underwriters governing the installation of automatic and open sprinkler equipment, New York, 1922*):

(*a*) The entire mill should be equipped with sprinklers, not merely that portion where fire is most likely to begin; any unsprinklered areas must be cut off by fireproof walls. (*b*) Sprinklers must be in upright position (deflector on top), must have 24 in. of wholly clear space below them, and should be 6 to 8 in. below the ceiling or the bottom of joists. (*c*) One sprinkler must be provided for 80 sq. ft. of area, spaced, say, 8 ft. on lines 10 ft. apart, the sprinklers being in staggered rows. No sprinklers should come within 12 in. of a post, hanger, or other vertical obstruction, nor within 2 ft. of wall or partition. (*d*) Under a pitched roof, one line of sprinklers should be installed under the peak, or two lines each not more than 2 1/2 ft. from the peak. (*e*) Preferably, no branch line should carry more than eight sprinklers. (*f*) Reducers, not bushings, should be used for connecting pipes of different size; couplings should not be used unless practically unavoidable. (*g*) DRY-PIPE SYSTEM should be adopted only in those parts of a mill where water pipes would be liable to freeze; the air capacity of a dry-pipe system controlled by a single valve should not exceed 115,500 cu. in. (*h*) The air pressure in a dry system (maintained by compressor) should not be more than 15 to 20 lb. in excess of the normal tripping pressure of the automatic water valve; the dry system should not leak more than 10 lb. pressure per week. (For detailed specifications, see the cited publication, obtainable on request.)

Water mains exclusively for fire-fighting purposes should be connected with tanks of ample size (50,000-gal. minimum) maintained constantly at full capacity; this is conveniently arranged by setting the fire tank first in series with the mill-water tanks and allowing it to overflow into them. Usual Canadian practice is to install elevated dual-purpose tanks, providing both fire and domestic supply, the reserve for fire fighting being maintained by drawing the "domestic" supply from a point high up in the tank.

Fire mains should also be connected with other sources of water supply available either instantly or by starting special fire pumps. If connection for this purpose must be made between the mill system and the usual separate domestic supply of the community, precautions must be taken to avoid contamination of the latter by installing a tight check valve which will not yield until the pressure on the mill side is considerably below that on the domestic side (this valve must not be forgotten during any readjustments which may affect the pressure on either side); a safer method is to discharge the domestic water into the fire tank from an open pipe. Ground reservoirs are sometimes piped in for emergency supply. Their use accentuates the necessity, always present, to take precautions to prevent sedimentation from raw water in tanks and mains. Freezing must also be guarded against. In cold countries this involves burying or boxing in the mains.

Pressure must be sufficient to reach the highest point of the highest structure on the property. A minimum pressure of 75 lb. per sq. in. should be provided for the highest fire hose connection. Mains and principal hydrants should be strategically located at least 50 ft. outside the buildings; near the most hazardous points inside, other connections should be provided for lines of 1 1/4- or 1 1/2-in. hose, which is as large as one man can handle at adequate protective pressures. Hose permanently connected to outside hydrants, not over 100 ft. in length (but with other 50-ft. lengths at hand), should be of standard 2- or 2 1/2-in. size without rubber. The standard NOZZLE for this hose has 1 1/8-in. orifice (passing 250 g.p.m. at 45-lb. nozzle pressure), but with the higher pressures available at a well-protected mill, orifices of 3/4 and 1 in. are sufficient. For the smaller hose, the nozzle opening should be 1/2 in.

Fire-fighting forces are of little use unless well organized and thoroughly trained by frequent practice. Organization should be effected in the early stages of the development under the charge of a suitable foreman. Every member should be instructed in the manner of reporting a fire, use of portable extinguishers, the location of hydrants, the fire-piping system and the interrelation of its valves, the water resources at immediate command and methods of adding to them, and the use of smoke masks. All of this information can be best communicated by printed instructions, supplemented by regular practice and "surprise" drills with teams so organized that a sufficient number of trained men will be on duty every shift. Suggestions for organization and training are published by the National Board of Fire Underwriters. Training in FIRST AID should also be provided in connection with fire training.

Cleanliness, always desirable on general principles, is particularly necessary in those parts of an inflammable mill subject to spill of lubricating and flotation oils. Journals that require frequent oiling should have drip pans or similar devices. Feeders for flotation oils should be similarly equipped. In a small mill, where flotation oils are transferred directly from barrels to the feeders, the area of floor used for this purpose should be made fireproof, if possible; otherwise it should be covered with sheet iron with raised edges, and sand spread on the floor, to be shoveled out and replaced as often as necessary.

Miscellaneous protection. Woodwork in the vicinity of electrical machines, switchboards, and other equipment subject to sparking should be protected by covering of galvanized iron, asbestos board, or other fire-resistant material. Fire doors are advantageous in conveyor galleries and similar locations. Mine plants should be protected from forest fires by clearings of adequate area surrounding the entire group of buildings. Adequate lighting is an important factor in reducing fire hazard.

Fire insurance rates on mill buildings start from the following bases per $100 of insurance per year:

Wet-process mill, $1.25; frame building, $0.75; wet-process mill with complete sprinkler system, $0.45 to $0.65. To the above base rates increases or decreases are applied as stated in Table 55.

Table 55. Changes in insurance base-rates on frame mills, cents per $100

	Increase	Decrease
Foundation and floors:		
Concrete foundation	..	10
Concrete floors	..	10
Wood posts	10	..
Floors other than earth, concrete or stone	10	..
Sides of building:		
Metal on steel skeleton	..	20
Hollow tile	..	50
Composition or asbestos sheets	..	5
Combustible lining	10	..
Not limewashed each year	10	..
Roofs:		
Wood shingles	25	..
Metal-clad, asbestos, or composition shingles	..	10
Height, each story over 2 (maximum 25¢)	5	..
Area over 5,000 sq. ft., per 1,000 sq. ft. (maximum 25¢)	2	..
Heating, stoves, first	5–10	..
Stoves, additional, each	3–5	..
Boilers, mill building or attached	40–60	..
Chimneys, steel through roof	10–20	..
Brick, low for coal; high for wood fuel	0	0
Lighting, nonstandard wiring	5–25	..
Coal oil	25	..
Motors, recommended installations	2	..
Nonstandard installations	10–25	..
Engines, gasoline or oil	15	..
Transformers in mill	25	..
Roasting or drying furnace	10–50	..
Shops and building within 30 to 50 ft	5–7	..
Protection:		
Underwriters pump 250 g. p. m.	..	20–25
Each added 250 g. p. m. capacity	..	10
Private pumps, 1-in. stream, all parts	..	5
Private pumps, 2 @ 1-in. streams, all parts	..	10
Standpipe and hose	..	10
Watchman and clock	..	10
Casks and buckets, or extinguishers, underwriters list	..	10
Other hazards: oils, oily waste, explosives, chemicals, steam pipes, bearings, exposure to other buildings, bushes, and yard	..	Special

RECOMMENDATIONS: Complete sprinkler system; transformer house, all concrete; concrete floors and foundations; central heating plant; shops separate over 50 ft. away; no gasoline auxiliaries; 2 1/2-gal. fire extinguishers as directed, about 1 per 10 to 20 tons of daily capacity (or equivalent casks or tanks with buckets); hand-controlled sprinklers in crushing department.

Use and occupancy or business interruption insurance costs about 75% of fire insurance and pays for net loss of profits and such fixed charges and expenses as must continue during the period of reconstruction after a fire.

11. DUST COLLECTION

Dust is likely to be produced in troublesome amounts in any dry-crushing and screening plant treating material carrying less than 7% moisture. If allowed to migrate freely, it may seriously endanger the health of operators, particularly if it is siliceous; it will increase wear on machinery, particularly electric motors, and will cause operating delays due to

slipping belts; it may cause loss of valuable ore amounting to from 0.1 to 1% on the crude, depending to some extent on climatic conditions. In base-metal plants the dust assay may be double that of mill feed; in free-gold plants, particularly in moist climates, dust assays are usually lower than mill heads. Motors can be protected somewhat by grouping them in an isolated room and driving the mill by line shaft, or by interposing an extra long shaft between a piece of equipment and its direct-connected motor, which can then be situated in an adjoining and dustproof room, but the most satisfactory method of control is to confine and collect the dust at its sources.

Collection may be effected by means of hoods over the offending machines, but hoods, if large, are likely to interfere with operation. It is better to so arrange suction from the dust zone of an offending machine that there is an in-draft of air toward the machine from all sides. Some plants combine overhead hoods and side or bottom suction.

Screens should be completely housed; exit openings from belt-conveyor galleries should be narrowed down with close-fitting partitions and doors, and a weighted canvas or rawhide brattice cloth should be hung over and close to the carrying belt; elevator and conveyor head pulleys should be housed and connected to the suction system. Where a fine-ore bin discharges, as, for instance, onto a belt conveyor, or where one conveyor discharges onto another, the dust may be collected by a hood; or an air-atomizing water spray may be effective.

Where collectors have been installed the value of the dust has often been more than enough to defray the whole expense of its collection.

Design of suction system. (See also Sec. 9.) The volume of air required to be moved into the system depends on the kind and number of machines served; allowances of 2,000 to 2,500 cu. ft. of free air per min. for each large primary or secondary crusher or screen handling an equivalent tonnage of dusty material, and 400 to 500 cu. ft. per min. for each conveyor-junction housing, should be ample. An air velocity of 3,000 ft. per min. is sufficient to transport any ordinary dust; higher velocities cause unnecessary abrasion. Piping should be so designed as to maintain substantially equal velocities in headers and branches, without recourse to valves and dampers except for shutoff on branches. Connections between hoods and suction pipes should be by bolted flanges, to permit quick dismantling; other joints in the suction line should be riveted and soldered, with laps in such direction as to cause minimum friction. For straight pipe, 16- or 20-gage galvanized steel is best; on curves, 16-gage. Radius of bends (measured from the center line) should not be less than $1\ 1/2$ times the diameter of the pipe, but there is no advantage in a radius greater than twice the diameter. Unless the headers are equipped with hopper pockets and gates at short intervals, they, as well as all other pipes, should have an inclination of 30° or more (preferably 45°) from horizontal to allow dust to be withdrawn on stopping operations.

Precipitation method (see also Sec. 9) depends on completeness of recovery required. The apparatus used includes cyclones, baffle separators, filters of various forms, spray chambers, and electrostatic precipitators. CYCLONES catch only 70 to 80%, comprising the coarser portion; cotton- or woolen-bag FILTERS following a cyclone make an efficient arrangement. ELECTROSTATIC PRECIPITATORS (Cottrell) are much used in cement plants because their recovery is high and the recovered product is dry and easily returned and mixed with the plant product; but the large outlay for such a plant seldom justifies its adoption for a wet concentrator. An ordinary circular SPRAY CHAMBER is less efficient than the devices discussed above because the fine dust is very resistant to wetting and escapes, but if the dust-carrying gas is forced to ascend through packed or plate towers countercurrent to water, dust precipitation is greatly increased. In such designs adopted by power companies operating in congested areas, dust recovery of 99% and better has been realized.

In the TAUBER PROCESS the gases are caused to bubble through a shallow layer of water containing an oily frothing agent; a froth or foam is formed in which the finest dust particles are intercepted.

At a dry-crushing mill at KALGOORLIE (*11 J 1070*) one 36-in. Sturtevant suction fan, at 1,000 r.p.m., drawing 5,000 cu. ft. of air per min., collected dust from six large crushers. Branch pipes were 9 in. diameter; main header, 18 in., equipped with V-traps and vertical risers for collection of the coarser particles. The dust assayed higher than the original ore. It was caught in a cyclone collector followed by a chamber having double walls of fine burlap, with rapping devices, and hoppered bottom with screw conveyor. The original installation at ARIZONA COPPER CO., in 1917 (*22 CME 207*), when crushing 250 tons per hr. to 3/4 in., with ore averaging 3.85% moisture, required seven hoods to cover one gyratory and grizzly, two horizontal disk crushers, and two pairs of rolls. The suction pipes were 8 in. diameter, except that from the gyratory hood, which was 10 in. The wet collector was a cylindrical tank of $3/16$-in. steel, 10.5 ft. diameter by 15.5 ft. tall, with tangential inlet near the top. The exhaust, through the top, came from inside a cylindrical shroud, 7 ft. diameter, extending down to within 6 ft. of the bottom of the tank. Water sprays impinged against this shroud, inside and out, and muddy water collected in a concrete basin on which the tank rested, flowing out through a water-sealed trap to flotation. The suction fan, following the wet collector, was a Sturtevant No. 70, exhausting 11,100 cu. ft. per min. at

577 r.p.m., and 3.5-oz. negative pressure; motor input, 23 hp. The dust collected was 0.0367% of the weight of ore crushed, assayed 2.34% Cu, and consumed 6,552 gal. of water per ton, which was probably more than actually necessary. A later installation by PHELPS DODGE CO. (*117 J 165*) had two similar units each comprising a motor-driven Sturtevant fan No. 80, dry collector, and wet collector. On fairly dry freshly mined ore, the system collected 8 to 10 tons of dust per shift (80% from the dry collector), of which 1% was coarser than 65-m. and 93% finer than 200-m.; its assay was about double that of the original ore. Each wet collector used 10 gal. of water per min. When working on oxidized ore from the stock pile, about twice as much dust, of the same fineness, was collected, and its assay was the same as that of the ore. At NACOZARI, a similar but smaller installation collected 3 tons of dust per shift, produced entirely by coarse crushing, assaying twice as much copper as the original ore. At a rock-crushing plant at CORONA, CALIF. (*116 J 889*), trommels were enclosed in jackets connected by suction pipes to two Sly type-A units, each having 3,000 sq. ft. of filter cloth and passing 10,000 cu. ft. of air per min. They collected 1.5 tons of dust per hr., coarse particles having been settled previously in a baffled chamber. Suction was stopped for 10 min. every 4 hr. to rap the filters. At UNITED VERDE crushing plant (*117 J 396*), dust was withdrawn from groups of four jaw crushers, four vibrating screens, four disk crushers, and four rolls by a separate duct from each group. The ducts had cleaning pockets and gates every 15 ft. Fine dust was caught by plate-and-wire Cottrell precipitators, collected in hoppers, and discharged into cars delivering to roasters. A negative pressure of 6-in. water-gage was produced by two 45,000-cu. ft. fans, each direct-connected to a 125-hp. motor. At AJO leaching plant (*114 J 184*), crushers stand above a tunnel containing a belt conveyor on which the crushers discharge; when operating, the ends of the tunnel are closed by doors, and air is exhausted by a suction fan delivering to a group of cyclone separators.

At MCINTYRE PORCUPINE, crushing 2,400 tons per 16 hr. from 7 to 3/16 in., moisture was 1.5–2.5%; air volume under and over one 7-ft. cone was 2,000 cu. ft. per min.; from one 78×18-in. rolls, 2,000; from surge bin and screens, 2,500; from two conveyor-transfer points, 400 each; total 7,300 cu. ft. per min. Suction fan at 175 r.p.m. drew 7,300 cu. ft. per min. at 6.35-in. water pressure. Power was provided by one 20- and three 1-hp. motors. Velocity of air in collecting pipes was 3,000 ft. per min. Filter plant comprised 260 @ 11 1/2×75-in. Sly bags, with a total area of 4,900 sq. ft., or 1.5 cu. ft. of air per min. per sq. ft. of bag area. The fan operated 84 min., then stopped for 1 1/2 min. while the filter beaters operated, when it started again automatically. Dust discharge was continuous. Two tons of dust, assaying 0.10 oz. Au, was collected per 16 hr., a recovery of $7.00 per day. Cost per year was: labor, $188; renewals, $345; or $1.50 per day. Net saving per year was $1,900. The dust collected was 97% < 325-m. Fan discharge averaged 230 < 5μ particles per cc. Cost of plant: materials and machinery, $8,146; labor, $2,218; or $55–$60 per ton of feed per hr. Volume of crushing plant building is 453,220 cu. ft. Renewals included about 200 bags per year.

At MOUNT ISA, 1,500 tons is crushed per 8 hr. from run-of-mine to < 3/4-in. Volume of air: 7,500 cu. ft. per min. from under two 24×36-in. crushers, two grizzlies, and one conveyor-exit; it is taken by 19-in. pipes (at 45° slope) to one 7-ft. cyclone and fan; 3,000 cu. ft. per min. is taken (at 25°) to one 7-ft. cyclone and fan from two 5 1/2-ft. Symons cones and one conveyor exit. Total 10,500 cu. ft. per min. requires two 17-hp. motors. Velocity of air in collecting pipes is about 3,750 ft. per min. Two Spenstead filters, 8 ft. diameter, with 37 @ 14-in. × 14-ft. bags, or 1,632 sq. ft. each (3.1 cu. ft. of air per min. per sq. ft. of bag area), precipitate the dust.

For installation at MORENCI see Sec. 2, Fig. 29.

12. SHOPS, REPAIRS, SUPPLIES

Character of shop work. At an operating mill, shop work is confined almost exclusively to repairs; while a mill is under erection, however, the shops are a most valuable adjunct, and may well be the first buildings set up. A long, simple structure can be partitioned off, the most convenient arrangement being, starting at one end: office, warehouse, machine shop, carpenter shop. Blacksmith work can usually be done most conveniently at the mine shop. The scope of work to be arranged for depends on the size and elaborateness of the mill, and its situation with respect to other established shops capable of doing at least some of the required work. The foundries and machine shops of an enterprise like UTAH COPPER CO., for example, providing for the operation of mines, railroad, and two large mills, compare favorably as to size, arrangement, and completeness with the best industrial machine works. A small mill in an outlying district would be justified in the installation of fairly complete shop machinery, even if not all continuously occupied, so as to save time in repairs and avoid some duplication of expensive mill equipment to guard against delays. Some means of transferring parts of heavy mill equipment into the shop without excessive effort must be provided by car tracks, crane, or both.

List of equipment for a MACHINE SHOP for a small mill: Hand punch and shear; lathe, 18-in. swing, 8- to 10-ft. bed; pipe-threading machine, 1 1/4 to 4 in.; oxyacetylene torch outfit complete; bolt- and pipe-threading machine for 1/2- to 1 1/2-in. bolts and 3/8- to 1-in. pipe; electric- or air-driven hand drill; portable forge, anvil and blacksmith tools; radial drill press, 48-in.; power hack saw. The usual assortment of hand tools, vises, benches, etc. The CARPENTER SHOP, besides benches and hand tools, should have a saw bench with 16-in. circular saws and a buzz planer.

At one large mill in the Southwest, the following machine tools, all with individual motors, are installed: 27-in. × 28-ft. lathe, 14-in. × 12-ft. lathe, 6-ft. radial drill, 16-in. spindle drill, 28-in. swing drill, 100-in. boring mill, 42-in. × 12-ft. planer, 24-in. shaper, No. 2 and No. 6 pipe machines, friction

saw, punch and shears, blacksmith forges, welding equipment. One 5-ton crane serves these machine tools. A 5-ton crane and a 60-ton crane with a 10-ton auxiliary are installed over the secondary ball mills to carry loads from the mill to the machine shops which are near by.

Repairs, in most cases, must be made without moving the machine from its place; small repairs can be made by the mill crew, who should be provided with benches and hand tools at convenient places in the mill. Worn parts of crushing machines can usually be repaired more conveniently in the shop, where screw jacks, hydraulic presses, etc., are available. With such machines, the best practice is to keep one or more spare parts on hand, assembled and ready to install; this applies particularly to gyratory spindle and crushing head, rolls, cylinder-mill scoops, and entire mills.

Cranes or crawls are essential in every part of a mill containing equipment too heavy to be lifted by rope or chain tackle and temporary staging; they also avoid the trouble and delay in erecting the latter, even where they might be strong enough. The usefulness of a crane begins while a mill is under construction, and it should be installed as soon as the columns and beams are in place. Care should be taken to insure that the crane is able to reach every unit of equipment it can advantageously serve, including motors, tumbling-mill scoops, classifiers, heads of elevators, and pumps, in addition to the heavier crushing equipment. A crane should also be able to travel either into the repair shop or far enough to deliver its load to a car or another crane serving the shop; if possible, the cranes in those parts of a mill having the heaviest equipment should reach also the railroad or supply yard.

Cranes are found serving the crushing plant and tumbling-mill floors at most large plants and at many of the smaller plants. The flotation floor is crane-served at the UTAH COPPER Co. mills because of the necessity for lifting out the 10- and 6-hp. vertical motors to change impellers. At the UNITED COMSTOCK (*114 J 846, 117 J 516*) the coarse-crushing department, containing No. 7 1/2 gyratories, 72-in. rolls, and 200-hp. motors, has a 20-ton crane reaching the railroad and the working space between the shops; the fine-crushing section, with 7×6-ft. ball mills and 150-hp. motors, also has a 20-ton crane traveling over the supply yard and into the shops; the cyanide department, with basket filters aggregating 74,400 sq. ft. of filtering surface, contains two 40-ton traveling cranes. The COPPER QUEEN had an unusually complete equipment of electric cranes, comprising two double-hoist 60-ton @ 30-ft. span, one 50-ton @ 75-ft. span, two 20-ton @ 38-ft. span, two 5-ton with 37- and 29- ft. spans respectively.

Hand-operated chain blocks are available with lifting capacities up to 20 tons and reaches up to 18 ft.; small, self-contained electric hoists, for suspending from girders, have capacities up to 10 tons with a lift of 10 ft. The simplest crawl consists of a 4-wheel trolley truck running on the lower flange of an I-beam; trolleys for loads up to 10 tons are on the market.

Warehouse and supply department is essential to efficient operation; under competent administration it reduces waste, facilitates cost accounting, and avoids loss of operating time resulting from lack of necessary materials. The warehouse should adjoin the railroad and be as close as practicable to the mill and shops. Materials regularly consumed, such as balls and pebbles and flotation reagents, should be stored near the point of consumption, though still under the jurisdiction of the storekeeper; other supplies, used intermittently, should be kept in the storehouse and issued only on requisition. Paints, lubricating oils, and similar highly inflammable materials should have separate fireproof storage. Lumber, lime, and cement should be protected from weather.

The quantity of supplies and spare parts best kept on hand depends on plant location, transportation facilities, and local conditions governing the time required to obtain shipments; also on the size, type, and financial status of the operation. To obtain lowest insurance rates, shops and warehouses should be located at least 50 ft. from the mill building.

A most important feature of stores operation is a correct running inventory, kept for the dual purpose of having material on hand when required yet keeping the money thus tied up at a reasonable minimum. The store balance should be checked accurately against the running record at least once a month.

13. METHODS OF PRACTICAL DESIGN

Preliminary layout. A FLOWSHEET is the first requisite. This must have been exhaustively studied and thoroughly and finally decided upon in respect to every important detail, including number, types, sizes, and capacities of individual machines; their relative positions with respect to one another; quantities of ore and of water in transit at every point throughout the mill; power required by every machine; and number, sizes, and types of all motors and the speed reducers connected with each. The design of the flowsheet will be based on the results of laboratory or pilot mill experiments, interpreted in the light of experience, and will be guided by the available supply of water, sources of power, type

of mill structure applicable to the site, and other practical considerations. A TOPOGRAPHIC MAP of the site is required, not only to select the general type of structure, but to determine the amount and character of the required excavations and the placing of walls, foundations, etc., so as to reduce the amount of this work, after the manner of a railroad location. The map, which will usually have been made early in the investigation, should cover a sufficient area to allow a choice among equally accessible sites and permit the final and precise selection to be deferred until the more important structural features have been determined. PRELIMINARY SKETCHES in three projections, not necessarily to scale, are a valuable means of crystallizing ideas, gaining a sense of proportion, and transmitting suggestions for execution of the next step. PRELIMINARY SCALE DRAWINGS should be confined to outlines, preferably on a scale of $^1/_{20}$ in. to the foot; adoption of this small scale protects the draftsman from the constant temptation to go too far into detail, thereby obscuring general features. The three projections of these drawings should appear on a single sheet, so as to give better idea of space proportions. On these drawings, the draftsman should prepare and make constant use of templates representing the outlines of individual machines or groups of closely related machines, such as rolls, elevator and trommel; ball mill, motor and classifier; these templates (used under transparent paper) not only save much time during the initial period when erasures are likely to be frequent, but are of great assistance in fixing the most advantageous position of the equipment. PRELIMINARY ESTIMATES of structural elements can be made from these small-scale drawings. These estimates, as well as those that follow, and all calculations on which they are based, should be preserved in bound notebooks (conveniently 8 × 10 in. or larger).

Detailed general drawings, in three projections on a scale of $^1/_8$ to $^1/_4$ in. to the foot, depending on over-all dimensions, must be complete as to every item, and show as much detail as possible at that scale. Nothing having any bearing on the erection of the building and installation of machines should be omitted; the more complete these drawings, the quicker the construction can be finished and the less the chance for overlooking essential features. Among the items that must be plainly shown on the general drawings are: foundations and floors, frame, walls and roof, windows, cranes and crawls, all machinery, motors and drives, shafting, clutches and pulleys, launders and pipe lines. A small mill should be drawn in entirety, a separate sheet for plan, front elevation, and end elevation or sections; for a larger mill, a typical unit will suffice at this larger scale, if accompanied by a complete assembly at a smaller scale.

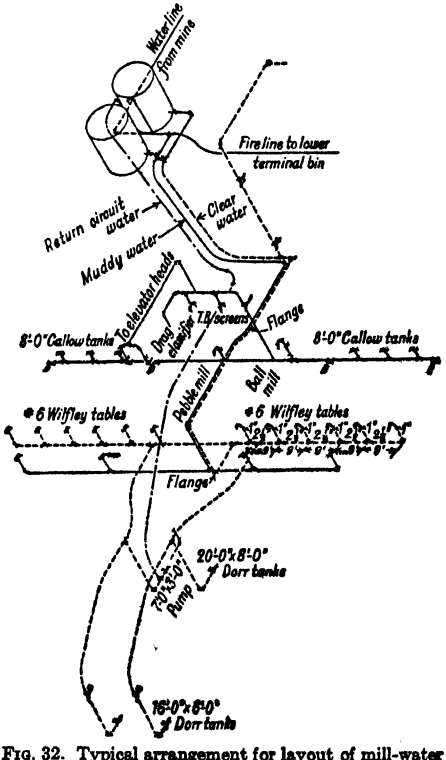

FIG. 32. Typical arrangement for layout of mill-water piping.

Construction details. The amount of large-scale drafting of structural details depends upon the size of mill and type of construction. The following detailed drawings should be supplied for all mills: (*a*) EXCAVATIONS: volume and character. (*b*) FOUNDATIONS: footings, dimensions and batters, copings, reinforcements, drains or "weep" holes, elevations of the top of each wall, pier or foundation above the datum plane, and the position of anchor bolts. (*c*) MECHANICAL EQUIPMENT: where machines of standard types and sizes are adopted, dimensions and foundation plans of which are supplied by manufacturers, the drawings to be made for construction purposes will relate mainly to their support and the facilities for conveying ore to and from them; for the installation of the large variety of other equipment, such as trommels, elevators, conveyors, feeders, distributors, samplers, and all other devices that must be adapted in size and arrangement to suit the particular mill, completely detailed

drawings should be prepared, including their connecting elements. (*d*) SHAFTING and all its appurtenances, including hangers or pillow blocks, journal boxes, clutches, pulleys, collars, and couplings; descriptions of all these elements should appear as completely as possible on the drawings, so that the accompanying written specifications need be little more than a reference list. (*e*) PIPING SYSTEM as a whole can be shown most easily and clearly by an isometric projection (see Fig. 32), on which the dimensions of all main and branch lines, valves, and fittings can be indicated; for minor details of particular connections, a sketch on larger scale should be appended as an insert on the main drawing. (*f*) LAUNDER SYSTEM must be worked out in all its details and subjected to careful scrutiny as to the ability of each member to carry the desired volume of its given pulp; this is a particularly important feature of design, and should not be left to the discretion of the millwright, since a launder once installed at too low a slope is difficult to reconstruct. (*g*) WIRING DIAGRAM, conveniently indicated by colored lines on a copy of the general drawings, should state the sizes of conductors, character of insulation, position of switches, fuses, lights, etc.

Table 56. Costs of

Name	Location	Year	Process *a*	Capacity, tons per 24 hr.	Machinery *b*		Cost of installation		
					Weight, tons	Cost	Labor	Material	Total
Media	Webb City, Mo.	1915	R, J, T	1,500	.....	$25,410	.....	.....	$5,730
Typical jig mill	Tri-State	1916	R, J	250	.....	.....	.....	.....	.....
Typical jig-table mill	Tri-State	1923	R, J, T	720	.....	.....	.....	.....	.....
Can.-Kaolin-Silica	Quebec	1938	W	500	.....	51,112	$10,671	$12,418	23,089
Annapolis	Mo.	1922	J, T, F	500	.....	92,365	.....	.....	.....
Armstead	Idaho	1921	T, F	150	.....	62,497	.....	.....	16,707
Magma	Ariz.	1914	T, F	150	.....	50,663	.....	.....	*e*
Bunker Hill & Sullivan	Idaho	1908	T, F	1,200	.....	414,000*f*	.....	.....	23,000 *g*
Betty O'Neal	Nev.	1923	F	300	.....	.....	.....	.....	.....
Allenby	B. C.	1919	F	2,000	.....	.....	.....	.....	.....
Shattuck-Arizona	Ariz.	1918	F *h*	400	.....	.....	.....	.....	.....
Ottawa	B. C.	1921	F	50	.....	.....	.....	.....	.....
Carbon Mtn.	Ala.	1917	F *i*	240	.....	25,715	.....	.....	5,056
Howe Sound, Chelan	Wash.	1938	F	1,300	.....	271,000	.....	.....	146,000
Pend Oreille	Idaho	.....	F	600	.....	90,000	.....	.....	110,000 *g*
United Comstock	Nev.	1922	C	2,000	.....	779,829	.....	.....	226,883
United Eastern	Ariz.	1916	C	300	.....	110,952	.....	.....	24,726
Wright-Hargreaves	Ont.	1919	C	200	.....	108,618	.....	.....	*e*
East Malartic	Que.	1938	C	1,000	.....	384,000	47,250	23,050	70,300
Haile	S. C.	1937	C	160	125	36,000	3,000	6,600 *g*	9,600
Itogon	P. I.	1935	C	1,000	.....	400,000*f*	.....	.....	.....
Sladen Malartic	Que.	1938	C	300	.....	122,216	15,336	13,223	28,559
American Metal	N. M.	1926	SF	650	525	205,000	55,000	73,000 *g*	128,000
Antomok	P. I.	1935	C	775	.....	333,000*f*	.....	.....	.....
Morris Kirkland	Ont.	1936	C	150	.....	82,181	13,808	8,373	22,101
Demonstration	P. I.	1934	F, C	350	850	136,000	84,000	72,000 *g*	156,000
I. X. L.	P. I.	.....	F, C	400	500	175,000	.....	.....	20,000
McIntyre-Porcupine	Ont.	1931	F, C	2,400	.....	825,000*f*	.....	.....	.....
Moore	Calif.	1923	A	100	.....	.....	.....	.....	.....
Seal Harbor	N. S.	1936	A, C	200	.....	87,000*f*	.....	.....	.....
Richard	N. J.	.....	M	.....	.....	72,246	.....	.....	*e*
Kimingini	Africa	1935	C	100	.....	.....	.....	.....	.....
Vanadium Corp.	Peru	1929	T, F, Rg	100	.....	.....	.....	.....	.....
Mt. Isa	Queensland	1932	T, F	2,000	1,155	.....	250,705 *m*	.....	.....
Arizona concentrators	Ariz.	.....	T, F	1,000	.....	.....	.....	.....	.....

a A, amalgamation; C, cyanidation; F, flotation; J, jig; M, magnetic concentration; R, rolls; Rg, roasting; SF, selective flotation; T, tables; W, washing.

b Includes electrical and miscellaneous; the former usually amounts to 10 to 15% and the latter to 4 to 5% of total cost of all machinery, f.o.b. factory.

c Excluding power-generating plant.

d Capacity 1,000 tons, equipped for 500 tons.

e Includes installation of machinery. *f* Installed.

Steel structures. It is rarely necessary for the mill designer to prepare detailed structural drawings for steel work. If the plant can be protected by one or a group of simple rectangular buildings, these can be purchased ready-made from a number of fabricators. For a larger and more complicated structure, the usual procedure is to prepare several sets of general plans, accompanied by a statement of the roof-load, floor-load, crane-capacities, character of wall material, etc., and submit these to steel-work fabricators, who thereupon assume responsibility for detailed working drawings. Bids and weights from these fabricators are scrutinized and compared, and the low bids carefully checked before contracts are awarded.

Wooden structures. If time permits, it is helpful to provide the millwright with a separate set of drawings of the structure dissociated from the mechanical equipment; this is easily done by tracing from the general detailed plans. If time is short, a set of the general plans can be amended by addition of dimensions and such details as are not shown with sufficient clearness for the millwright's use, notably trusses and bins.

representative milling plants

Building								Total cost		Machinery cost, per cent. of total
Kind	Aver. hgt., ft.	Volume, cu. ft.	Lb. steel per cu. ft. of vol.	Cost				Of plant	Per ton daily capacity	
				Labor	Material	Total	Per cu. ft. of volume *l*			
Wood	.....	.....	.....	.....	.....	$19,150	.....	$50,000	$34	50
Wood	.....	.....	.....	.....	.....	.....	.....	7,200	30	.....
Wood	.....	.....	.....	.....	.....	.....	.....	75,000 *c*	105	.....
Wood	20.6	200,000	.....	$22,051	$18,151	40,202	$0.20	114,403	229	45
Steel *d*	.....	.....	.....	.....	.....	102,392 *d*	.....	194,760 *c*	390	47
Wood-frame	.....	.....	.....	.....	.....	27,866	.....	128,154	854	49
Wood-frame	.....	.....	.....	.....	.....	35,756 *e*	.....	86,420	576	58
Wood	46.6	2,100,000	.....	65,000	81,000	146,000	0.07	583,000	486	76
Wood-frame	.....	.....	.....	.....	.....	.....	.....	200,000	667	.....
Wood-frame	.....	.....	.....	.....	.....	.....	.....	1,300,000	650	.....
Wood-frame	.....	.....	.....	.....	.....	.....	.....	294,900	737	.....
Wood	.....	.....	.....	.....	.....	.....	.....	30,000	600	.....
Wood	.....	.....	.....	.....	.....	9,641	.....	45,657	190	56
Steel	.....	.....	.....	.....	.....	353,000	.....	770,000	592	35
Steel	11.2	135,000	.....	35,000	45,000	80,000	0.60	280,000	466	50
Steel-concrete	.....	.....	.....	.....	.....	732,595	.....	1,739,300	870	45
Wood-frame	.....	.....	.....	.....	.....	62,079	.....	200,000	667	56
Wood *j*	.....	.....	.....	.....	.....	53,327 *e*	.....	161,945	810	67
Steel	45	1,527,000	0.53	41,200	113,300	154,500	0.10	608,800	608	63
Wood	33.6	215,000	.....	8,000	9,400	17,400	0.08	63,000	394	57
Wood	.....	.....	.....	40,000	60,000	100,000	.....	500,000	500	80
Wood	30.2	325,000	.....	25,933	26,631	52,564	0.16	203,339	677	60
Wood	20.6	680,000	.....	.....	.....	131,000	0.19	464,000	714	44
Wood	34	1,600,000	.....	.....	.....	106,000	0.07	439,000	566	76
Wood	26.1	240,000	.....	18,709	21,341	40,050	0.17	144,414	970	32
Wood	29.1	990,000	.....	6,600	13,400	20,000	0.02	312,000	890	44
Wood	25	1,000,000	.....	12,000	6,000	18,000	0.02	213,000	533	82
Steel	.....	2,561,000	1.3	.....	.....	475,000	0.19	1,300,000	541	64
.....	.....	.....	.....	.....	.....	.....	.....	77,030 *k*	770	.....
Wood	.....	.....	.....	.....	.....	21,500	.....	108,500	542	80
Steel	.....	.....	.....	.....	.....	69,334 *e*	.....	141,580	.....	50
Steel	24.7	273,200	1.19	.....	.....	58,000	0.21	.....	.....	.....
Steel	30.5	366,000	0.82	.....	.....	46,500	0.13	.....	.....	.....
Steel	48.5	1,765,000	1.73	.....	.....	340,000	0.19	.....	.....	.....
Steel	.....	.....	1.2	.....	.....	.....	0.084	.....	.....	.....

g Unspecified items added to make total check.
h Sulphide and oxide.
i Graphite.
j Asbestos-covered.
k Including shops and warehouse, but not tailing-disposal plant.
l Excluding excavation and concrete work.
m Includes labor on building.

14. METHODS OF COST ESTIMATING

A preliminary, approximate idea of the ultimate cost of a complete mill of given type may be gained from the following factors, representing in round numbers the range in total cost of erection and installation per ton-day (24-hr.) capacity:

Jig-table mill, Tri-State district, buying electric power	$100–150
Coarse concentration, jigs and tables	300–450
Fine concentration, tables and flotation	600–750
All flotation one-mineral separation	600–800
All flotation, two-mineral separation	700–900
Fine crushing and cyanidation	700–1,200
Stamps, amalgamation	400–700

Table 56 gives examples of mills representing the above types.

Erection and installation. When the factory prices of all essential machinery have been ascertained, the probable cost of the completed mill can be approximated by the empirical rule that for each $1 in machinery, f.o.b. factory, the cost of erecting the building and installing the equipment will range, under average conditions, from $0.75 to $1 per dollar of machinery cost, running up to $1.50 in exceptional circumstances, such as expensive building materials, inefficient labor, and delays. (See Table 56.)

Cost-volume ratios. Under average conditions in United States mining districts, the cost for labor and materials of buildings alone will approximate, per cubic foot of enclosed space: Wooden buildings, 8 to 12¢; steel buildings, 15 to 20¢. (See Table 56.)

Erection, labor-cost factors. Based on the quantity of principal structural material required, the cost of erection can be estimated roughly as follows: Wooden structure, $35 to $45 per M bd. ft.; steel structure, 1.0 to 1.5¢ per lb. Based on tons of equipment installed, the labor cost alone, covering the erection of building and installation of machinery, may be estimated at roughly $100 to $110 per ton for ordinary plants in locations not too isolated; plants in the tropics requiring little more than a shed for housing may fall to $50 per ton; complicated plants in remote regions may run above $200 per ton (1940) (See Table 56.)

Equipment costs. Factory prices (1938), weights, and labor costs of erection of individual machines are given in Table 57. These prices, especially the labor costs, which will vary with local conditions and wages, are approximate only and are intended for preliminary estimates. Final estimates should be based on quoted prices.

It is intended that the following list shall be used for estimating purposes only. To the factory price of machinery should be added enough to cover (*a*) freight charges from factory to the railroad point nearest the mill (approximately $1.50 per 100 lb., or say 2¢ per ton-mi. for carload and twice as much for less than carloads), (*b*) the cost of hauling from railroad to millsite (say 40¢ per ton-mi. for teams or 20¢ per ton-mi. for motor trucks), and (*c*) the cost of unloading and distributing machinery on the millsite (about $3 per ton). It should be borne in mind also that some manufacturers list prices that are intended to form an initial basis for bargaining.

Excavation that was required at several mills and the cost per cubic yard are given in Table 58.

Concrete work, its volume and cost, covering walls, foundations, and floors at typical mills, is shown in Table 59.

Final estimates are based on completed plans and specifications, previously described (Art. 13). The first step is to prepare an ITEMIZED LIST of all equipment and materials required; much depends on the completeness of this list; nothing should be omitted that will contribute in the least degree to the satisfactory operation of the mill. Some of the items most likely to be overlooked are given in the following list:

Building rods, bolts, washers, drift spikes, etc.; blower air piping; brick; belt fasteners; cranes, hoists, trolleys; chain blocks and crawl beams; condensation-water tank and pump; cleaning up; construction tools; ditch digging; electric lighting, power poles, light wiring, conduits, and connections; equalising-water tank and float; elevator bolts, washers, etc.; feed distributors; fuel for heating mill during construction; fire protection; fire hose; grinding balls; gear housings; linings for launders, etc.; lighting: drop cords, shades and globes, transformers; lime bins and feeders; master valves; oil and waste; power cables; piping, all necessary fittings, etc.; paint and painting; reagent storage, feeders; repair parts and renewals; screen coverings; steam heating; steel chutes; sampler equipment; stairs; signal system; steam-pipe coverings; stock-tank agitators; windows; walkways and guard rails; water mains; water-supply tanks; water-supply pumps.

Table 57. Weights, factory costs, and labor costs for erecting the principal items of mill equipment

Equipment	Factory weight, lb.	Factory price, 1938 *a, b*	Labor cost of erection	Remarks
Acetylene cutting and welding outfit	1,195	$775	.....	Incl. generator and truck.
Air hammer, 1,200-lb	34,000	3,880	$250	Belt and motor drive.
Air hammer and caulker	12	73	.....	
Ball mills, cylindrical				
Grate type				
4×3-ft.	13,500	2,660	195	Belt drive; manganese-steel liners. *d*
5×4-ft.	26,000	4,250	260	
6×5-ft.	45,000	7,150	450	
7×6-ft.	80,000	10,700	800	
8×8-ft.	120,000	17,900	1,200	
9×9-ft.	155,000	21,400	1,400	
Overflow type				
3×3-ft. P.D.	9,500	1,955		Manganese-steel liners. *d*
do. M.D.	10,700	2,640		M.D. = Motor drive.
3×4-ft. P.D.	10,500	2,100		P.D. = Pulley drive.
do. M.D.	11,800	2,840		
3×5-ft. P.D.	11,500	2,245		
do. M.D.	13,000	3,035		
4×4-ft. P.D.	26,500	4,620		
do. M.D.	25,500	5,200		
5×3 1/2-ft. P.D.	14,250	4,090		
5×4-ft. P.D.	35,000	5,940		
do. M.D.	31,000	6,340		
5×5-ft. P.D.	38,000	6,540	About 1¢ per lb.	
do. M.D.	34,000	6,740		
6×4-ft. P.D.	49,000	7,920		
do. M.D.	44,000	7,780		
6×5-ft. P.D.	53,300	8,450		
do. M.D.	48,000	8,300		
6×6-ft. P.D.	57,000	8,960		
do. M.D.	52,000	8,900		
7×5-ft. P.D.	69,000	10,410		
do. M.D.	66,000	11,010		
7×6-ft. P.D.	73,800	11,100		
do. M.D.	70,000	11,600		
8×5-ft. P.D.	92,500	12,420		
8×6-ft. P.D.	98,500	13,150		
9×8-ft. M.D.	117,000	19,800		
10 1/2×8-ft. M.D.	148,500	25,100		
Ball mills, conical				
3-ft.×8-in.	4,500	1,100	50	Belt drive; titanite and chrome lining.
4 1/2-ft.×16-in.	13,000	2,150	100	
5-ft.×36-in.	21,500	3,600	160	
6-ft.×48-in.	29,000	5,500	220	
7-ft.×36-in.	34,000	7,500	250	
8-ft.×48-in.	52,000	10,000	325	
8-ft.×48-in.	72,000	12,500	450	
10-ft.×72-in.	95,000	19,000	700	
Band saw: *see* Saws				
Bearings:				
Ball-and-socket, ring-oiling	$8D^2c$	$2.3D^2c$	0.68	
Plain, ring-oiling	$6D^2c$	$1.5D^2c$	0.96	
Plain	$5D^2c$	$0.8D^2c$	1.12	
Belt conveyors: *see* Conveyors				
Belting:				
Leather, single weight	.....	15–20¢	.....	Cents per ft. per in. of width.
double weight	.....	30–40¢	.....	
Rubber, 4-ply	0.13	10–15¢	.....	Weight, lb. per ft., 1 in. wide.
6-ply	0.18	15–25¢		
8-ply	0.24	22–35¢	.....	

Table 57. Weights, factory costs, and labor costs for erecting the principal items of mill equipment.—*Continued*

Equipment	Capacity, cu. ft. per min.	Factory weight, lb.	Factory price, 1938 *a, b*	Labor cost of erection	Remarks
Bin gates:					
Double-rack-and-pinion type					
18×22-in.		220	$44	$5	
24×24-in.		240	61	.....	
24×30-in.		280	66	7	
24×36-in.		330	72	.....	
30×30-in.		350	99	.....	
30×36-in.		400	110	10	
Heavy-pattern					
18×24-in.		455	140	15	
24×32-in.		585	235	25	
30×36-in.		728	365	35	
Blacksmith's forge, 36 × 36 × 72 in.		275	116	5	
Blade washers: *see* Washers					
Blast-furnaces, round, water-jacketed:					
Copper:					
24-in.		8,000	3,520		Brick not furnished.
36-in.		12,000	4,840		
42-in.		14,000	5,360		
48-in.		15,000	5,225		
Lead:					
20-in.		6,000	2,560		Brick not furnished.
24-in.		8,000	3,670		
30-in.		11,000	4,850		
36-in.		13,000	5,280		
42-in.		14,000	5,630		
Blowers:					
Cycloidal:					
Size, in.	Capacity, cu. ft. per min.				
8 × 12	433	1,100	450	30	
10 × 15	880	1,600	675	45	
12 × 18	1,385	2,600	850	60	
14 × 21	1,940	3,500	1,175	90	
16 × 24	2,570	5,250	1,400	105	
18 × 27	3,350	6,500	1,700	125	
20 × 30	4,225	8,800	2,050	150	
22 × 33	5,180	11,500	2,400	180	
Turbo:					
8	900	1,400	1,450	38	3-lb. discharge pressure; single-stage; 3,550 r.p.m.; 500 ft. maximum altitude. With motor, 220-, 440-, or 550-volt.
8	1,500	1,750	1,670	47	
12	2,400	5,150	2,365	105	
12	2,800	5,350	2,560	105	
16	3,900	6,250	3,185	125	
16	5,400	6,400	3,750	125	
20	7,000	7,350	4,200	180	
20	11,500	8,750	5,300	200	
Boilers:					
Tubular, 125-lb. pressure					
60-hp.		11,300	1,250	490	Full fronts; complete with stacks.
100-hp.		22,700	1,820	950	
150-hp.		29,200	2,350	1,200	
200-hp.		35,700	3,000	1,450	
Sterling:					
200-hp. (hand-fired)		45,000	6,200	3,250	Including brickwork, but not including stack or foundation.
300-hp. (hand-fired)		65,000	8,500	3,600	
500-hp. (hand-fired)		90,000	11,750	4,500	
750-hp. (chain-grate stoker)		160,000	21,000	8,500	
1,000-hp. (chain-grate stoker)		210,000	26,000	11,000	
Bolt-threading machine, 2-in.		2,500	775	30	Complete with motor.
Boring mill, 72-in.		31,000	9,700	300	Do.

Table 57. Weights, factory costs, and labor costs for erecting the principal items of mill equipment.—*Continued*

Equipment	Factory weight, lb.	Factory price, 1938 *a, b*	Labor cost of erection	Remarks
Chain blocks, spur-geared:				
Capacity, tons / Lift, ft.				
1 / 8	100	$90	.....	
2 / 9	205	140	.....	Add 1.5% per ft. additional lift.
3 / 10	220	180	.....	
5 / 12	415	280	.....	
10 / 12	615	480	.....	
20 / 12	1,230	850	.....	
Classifiers:				
Cone-type (Allen)				
3.5-ft.	675	.....	$20	
4.5-ft.	825	.....	25	
6-ft.	1,050	.....	30	
8-ft.	1,600	.....	50	
Hydraulic:				
Deister CPC, 1-cell	500	300	10	
Addl. cells, each.	150	50	1	
Richards-Janney, 3-spigot	700	550	20	
Rake: Duplex				
4×15-ft.	4,650	1,000	45	Pulley drive or motor base; steel tank.
5×15-ft.	5,100	1,200	50	
6×18-ft.	11,000	2,400	110	
8×18-ft.	12,500	2,800	125	
Spiral: single				
24-in. × 17-ft.	4,500	1,200	45	For duplex-type, double weights and prices.
36-in. × 22-ft.	11,000	2,700	110	
48-in. × 29-ft.	18,000	3,400	150	
54-in. × 30-ft.	20,000	4,000	175	
Clutches: *e*				
Hp.				
10–25	200–500	130–206	.....	Clutch only (on pulleys). Hp. figured at 100 r.p.m.
45–90	650–1,250	260–375	.....	
125–275	1,500–3,200	450–940	.....	
Collars:				
Diam., in.				
1 7/16–2 7/16	1.25–3.25	0.39–0.70	.....	Solid.
2 11/16–3 7/16	3.75–6.51	0.85–1.05	.....	
3 11/16–4 7/16	9–14	1.30–2.45	.....	
4 15/16–5 15/16	15–24	3.00–4.50	.....	
Compressors:				
Reciprocating: 100-lb. press.				
7× 7-in. 122 cu. ft./min.	2,100	800	40	V-rope, not motor.
12×11-in. 426 cu. ft./min.	6,100	1,800	90	
14×13-in. 638 cu. ft./min.	9,800	2,450	120	
Rotary:				
Gage press. lb. / Cu. ft. per min.				
3–10 / 500	300	315	10	No motor.
3–10 / 495–465	1,900	1,180	20	Direct-connected.
11–30 / 57–50	600	506	15	
11–30 / 1,200–1,110	6,500	2,830	60	Water-cooled.
50–100 / 75–69	950	770	10	Water-cooled.
50–100 / 555–527	5,700	2,880	55	
50–100 / 251–238	3,150	1,645	35	
Converters, copper:				
Great Falls type:				
10 ft. diam.	59,180	4,450	.....	Brickwork not included.
12 ft. diam.	70,700	8,250	.....	
Pierce-Smith				
10×17-ft. 4 in.	91,320	22,720	.....	Brickwork not included.
13×30-ft.	130,000	35,900	.....	

Table 57. Weights, factory costs, and labor costs for erecting the principal items of mill equipment.—*Continued*

Equipment	Factory weight, lb.	Factory price, 1938 *a, b*	Labor cost of erection	Remarks
Conveyors:				
Apron, pan-type:				
42-in. × 10-ft. 2 1/2 in.	28,000	$7,550	.....	Motor not included.
" × 11-ft. 3 in.	30,400	8,050	.....	
" × 12-ft. 3 1/2 in.	31,200	8,220	.....	
48-in. × 10-ft. 2 1/2 in.	30,000	7,930	.....	
" × 11-ft. 3 in.	32,500	8,440	.....	
" × 12-ft. 3 1/2 in.	33,500	8,610	.....	
60-in. × 10-ft. 2 1/2 in.	35,000	8,630	.....	
" × 11-ft. 3 in.	38,000	9,150	.....	
" × 12-ft. 3 1/2 in.	39,200	9,380	.....	
Belt:				
18-in. × 50-ft.	2,420	730	$200	
" × 250-ft.	8,100	2,850	1,000	
" × 450-ft.	15,000	5,700	1,800	
24-in. × 50-ft.	3,300	700	270	
" × 250-ft.	11,000	3,450	1,330	
" × 450-ft.	19,400	6,200	2,400	
30-in. × 50-ft.	3,800	890	335	
" × 250-ft.	14,500	4,450	1,675	
" × 450-ft.	24,000	8,000	3,000	
36-in. × 50-ft.	4,500	1,065	400	
" × 350-ft.	16,500	5,300	2,000	
" × 450-ft.	30,000	9,600	3,600	
42-in. × 50-ft.	5,800	1,450	460	
" × 250-ft.	20,000	7,250	2,300	
48-in. × 450-ft.	34,000	13,000	4,200	
Coolers:				
Air quenching:				
2 × 30-ft.	140,000	23,100	.....	
3 × 40-ft.	165,000	25,300	.....	
3 1/2 × 65-ft.	260,000	36,300	.....	
4 × 60-ft.	263,000	36,300	.....	
4 1/2 × 75-ft.	300,000	41,800	.....	
Rotary:				
5 × 50-ft.	31,000	5,170	.....	Complete with air seal, driving and carrying mechanism, and foundation belts. No motors or bricks.
6 × 60-ft.	56,000	7,700	.....	
7 × 60-ft.	75,000	10,250	.....	
8 × 60-ft.	87,000	11,550	.....	
8 × 70-ft.	100,000	13,200	.....	
Couplings:				
Diam., in.				
1 7/16 – 2 7/16	20–60	15–22.50	.....	Flange fitted to shafts and faced.
2 11/16 – 3 7/16	80–140	26.50–42.50	.....	
3 11/16 – 4 7/16	165–260	50–82.50	.....	
4 15/16 – 5 15/16	360–550	110–172.50	.....	
Cranes: Capacity Span				
5-ton 20 ft.	3,600	1,050	.....	Hand-operated.
10-ton 20 ft.	9,500	2,250	.....	Do.
25-ton 20 ft.	26,000	4,300	.....	Do.
50-ton 30 ft.	70,000	13,500	.....	Motor-driven.
75-ton 40 ft.	140,000	24,000	.....	Do.
Crawls: overhead, 4-wheel, roller-bearing				
1-ton	80	70	.....	I-beam: 6–8-in.
2-ton	150	105	.....	8–12-in.
3-ton	200	130	.....	10–15-in.
5-ton	330	200	.....	12–20-in.
10-ton	650	440	.....	15–24-in.
20-ton	1,500	720	.....	24-in.
Crushers: *see* specific types				
Cutting: *see* Acetylene				

Table 57. Weights, factory costs, and labor costs for erecting the principal items of mill equipment.—*Continued*

Equipment	Factory weight, lb.	Factory price, 1938 *a, b*	Labor cost of erection	Remarks
Drill, electric, portable	25	$125		
Drill-press, radial, 48-in.	7,500	1,620	$80	Complete with motor.
upright, 14-in.	1,900	160	20	Complete with motor.
upright, 30-in.	2,200	600	25	Complete with motor.
Driers: Ruggles-Coles:				
48-in. × 20-ft. double-shell	28,000	4,400	320	No brickwork or motor.
60-in. × 30-ft. do.	44,000	6,800	460	
80-in. × 45-ft. do	90,000	13,000	700	
48-in. × 20-ft. single-shell	17,000	3,800	250	
60-in. × 30-ft. do.	35,000	6,400	350	
80-in. × 45-ft. do.	75,000	11,800	575	
Electrical equipment: *see* specific items				
Elevators:				
Dry, continuous-bucket:				
Bucket length Centers				
9 in. 30 ft.	3,000	540	160	Complete with wood frame.
9 in. 70 ft.	5,200	950	370	
16 in. 30 ft.	4,100	900	180	
16 in. 70 ft.	7,300	1,560	420	
30 in. 30 ft.	9,700	2,200	300	
30 in. 70 ft.	18,000	3,700	700	
Wet, belt:				
Bucket length Centers				
8 in. 30 ft.	1,800	560	200	Complete, including wood housing.
8 in. 60 ft.	2,600	930	400	
12 in. 30 ft.	2,700	730	260	
12 in. 60 ft.	4,400	1,350	520	
16 in. 30 ft.	3,600	1,050	300	
16 in. 60 ft.	6,300	1,870	600	
2 @ 14 in. 30 ft.	6,400	1,700	400	
2 @ 14 in. 60 ft.	11,800	3,150	800	
Feeders:				
Apron:				
Width Length				
18 in. 5 ft.	3,000	605	30	Gear or ratchet drives.
24 in. 5 ft.	3,700	726	37	
30 in. 5 ft.	4,800	918	48	
36 in. 5 ft.	5,000	1,030	50	
48 in. 5 1/4 ft.	6,500	1,690	65	
54 in. 5 1/4 ft.	7,200	1,815	72	
60 in. 5 1/4 ft.	8,000	1,935	80	
Armored-belt:				
18-in. × 8-ft.	1,300	400	30	
24-in. × 10-ft.	1,900	500	45	
Hardinge constant-weight:				
1 ton per hr., 1/2-in. max.	500	425	5	Complete with motor.
12 tons per hr., 1 1/2-in. max.	700	650	15	
200 tons per hr., 3-in. max.	1,000	750	20	
1000 tons per hr., 6-in. max.	3,500	1,300	30	
Lime, 500-lb. hopper	550	275	15	Complete with motor.
Magnetic-"Utah" type:				
Suspended:				
12-in. × 5-ft.	2,200	950	22	
18-in. × 5-ft.	2,600	1,050	26	
24-in. × 5-ft.	3,000	1,150	30	
Foundation-mounted:				
12-in. × 5-ft.	1,800	900	18	
18-in. × 5-ft.	2,200	1,000	22	
24-in. × 5-ft.	2,500	1,100	25	
36-in. × 3-ft.	4,200	1,350	42	

Table 57. Weights, factory costs, and labor costs for erecting the principal items of mill equipment.—*Continued*

Equipment	Factory weight, lb.	Factory price, 1938 *a, b*	Labor cost of erection	Remarks
Feeders:—*Continued*				
Reagent:				
Geary A, per cell	300	$225	$10	
Geary B, per cell	700	425	12	
2-compartment, finger	275	175	10	Motor-drive.
5-compartment, finger	375	350	10	Do.
1-comp., 12-in. disk and cup	190	115	10	Do.
2-comp., 24-in. disk and cup	1,250	425	20	Do.
5-comp., 12-in. disk and cup	430	335	15	Do.
5-comp., 24-in. disk and cup	2,750	775	25	Do.
Wall:				
16-in	550	200	15	Pulley-drive.
24-in	1,100	462	20	Do.
16-in	500	193	15	Gear-motor drive, no motor.
24-in	1,050	462	20	
Filters:				
Pan:				
Simplex: 6 sq. ft	625	230	10	No auxiliaries included.
9 sq. ft	700	255	10	
12 sq. ft	900	310	15	
18 sq. ft	1,100	340	15	
Duplex: 12 sq. ft	1,100	400	15	
18 sq. ft	1,400	430	20	
24 sq. ft	1,700	490	20	
36 sq. ft	1,900	535	20	
Pressure, plate-and-frame:				
30 @ 18×18-in. sec	3,900	625	50	
30 @ 24×24-in. sec	5,800	800	80	
36 @ 30×30-in. sec	12,300	1,050	150	
60 @ 36×36-in. sec	26,415	2,300	180	
Vacuum:				
Disk-type:				
4 ft. @ 2-disk, 44 sq. ft	2,500	1,300	50	No pumps or other auxiliaries.
4 ft. @ 4-disk, 88 sq. ft	3,800	1,700	75	
6 ft. @ 2-disk, 100 sq. ft	7,000	2,200	140	
6 ft. @ 4-disk, 200 sq. ft	9,100	2,800	180	
6 ft. @ 6-disk, 300 sq. ft	11,200	3,400	225	
Drum-type:				
6×6-ft., 113 sq. ft	8,400	2,600	175	
8×8-ft., 200 sq. ft	12,000	3,900	250	
12×12-ft., 432 sq. ft	29,500	6,000	500	
Flotation machines:				
MacIntosh (Geco) 30-in.:				
10-ft	2,900	835	30	Complete with motor and drive but no blower.
15-ft	3,200	1,200	35	
20-ft	4,400	1,600	45	
Agitair (Galigher):				
24-in. @ 6-cell	5,100	2,100	50	Complete with motor and drive.
36-in. @ 6-cell	9,800	3,000	100	
Mechanical (Geco):				
24-in. @ 1-cell	1,300	415	15	Complete with motor and drive.
24-in. @ 6-cell	6,600	1,740	60	
30-in. @ 1-cell	1,700	465	20	
30-in. @ 6-cell	9,000	2,070	80	
36-in. @ 1-cell	2,300	560	25	
36-in. @ 6-cell	10,800	2,640	100	
Southwestern, air:				
4-ft	1,100	350	11	
12-ft	3,300	1,600	33	
24-ft	6,600	2,250	66	
60-ft	16,500	5,500	165	
Denver sub-A:				
24-in. @ 6-cell	6,500	1,500	60	Complete with motor and drive material.
36-in. @ 6-cell	14,000	2,000	115	
56-in. @ 6-cell	42,000	6,000	200	
Forge: *see* Blacksmith forge				
Furnaces: *see* specific				
Grinders: *see* specific				

Table 57. Weights, factory costs, and labor costs for erecting the principal items of mill equipment.—*Continued*

Equipment		Factory weight, lb.	Factory price, 1938 *a, b*	Labor cost of erection	Remarks
Grizzlies:					
Standard: *f*	Spacing, in.				
3×8-ft.	1 1/2	820	$171	$20	3/4×3/8-in. taper-section rolled-steel bars, complete with spacers.
3×8-ft.	2 1/2	740	132	15	
3×10-ft.	1	1,400	260	35	
4×8-ft.	2	1,090	195	25	
Cantilever:					
2×4 1/2-ft.	3/4	1,150	380	30	3-in. manganese-steel bars, complete with spacers.
2×4 1/2-ft.	2	900	310	25	
3×5 1/2-ft.	1	1,850	470	40	
Shaking:	Aperture				
30×60-in.	3/4×3/4-in.	5,000	1,700	125	Manganese-steel bars. Complete with spacers, frame, and pulleys.
36×60-in.	1 1/4×1 1/4-in.	5,200	1,760	130	
48×72-in.	1 1/2×1 1/2-in.	8,400	2,640	200	
65×120-in.	1 1/2×1 1/2-in.	10,200	3,660	250	
Gyratory crusher:					
8×68-in.		20,000	5,360	500	Short-shaft, 2 openings, manganese-steel fitted.
10×80-in.		30,000	6,660	600	
13×90-in.		45,000	8,810	800	
16×112-in.		62,000	11,400	1,000	
20×136-in.		95,000	17,100	1,500	
30×180-in.		170,000	28,200	2,500	
42×264-in.		286,000	44,600	3,500	
60×348-in.		725,000	122,600	10,000	
Hacksaw, power: *see* Saws					
Hydraulic press, 150-ton		4,000	585	.....	12-in. stroke, hand pump.
Jaw crusher:					
Blake-type:					
7×10-in. sectional		5,500	1,780	.....	Manganese-steel fitted.
7×10-in.		6,500	984	70	
9×15-in.		12,000	1,540	150	
10×20-in.		15,000	1,910	190	
12×24-in.		25,000	2,530	250	
18×30-in.		45,000	4,450	450	
24×36-in.		70,000	9,600	950	
24×36-in. all-steel		65,000	15,220	900	
36×48-in.		145,000	16,700	1,650	
36×48-in. all-steel		126,000	24,500	1,350	
40×42-in.		135,000	14,500	1,450	
48×60-in.		215,000	24,400	2,500	
48×60-in. all-steel		235,000	36,500	2,750	
Dodge-type:					
4×6-in.		1,100	368	20	Manganese-steel fitted.
7×9-in.		3,250	590	35	
7×9-in. sectional		3,350	885	40	
8×12-in.		5,900	1,030	65	
11×15-in.		13,500	1,660	175	
Single-toggle type:					
6×12-in.		2,000	580	40	Bronze bearing.
8×15-in.		4,000	790	80	Do.
9×16-in.		5,400	1,675	100	Cast-steel frame; manganese-steel fitted; roller bearing.
9×21-in.		6,350	2,000	125	
9×30-in.		10,100	2,775	200	
9×36-in.		11,150	3,100	220	
13×24-in.		9,700	2,725	190	
15×38-in.		21,500	5,250	425	
18×30-in.		20,250	5,150	400	
24×36-in.		35,000	7,850	600	
Fine-reduction (curved-plate):					
9×18-in.		7,000	1,815	150	Manganese-steel fitted.
10×24-in.		11,500	2,640	225	

Table 57. Weights, factory costs, and labor costs for erecting the principal items of mill equipment.—*Continued*

Equipment	Factory weight, lb.	Factory price, 1938 *a, b*	Labor cost of erection	Remarks
Jigs:				
Harz, single, 1-comp.:				
18×30-in.	1,500	$250	$50	Woodwork and ironwork complete.
Addl. comps.	1,000	200	20	
24×36-in.	2,000	400	80	
Addl. comps.	1,500	250	25	
Hancock:				
25-ft., 5-comp.	19,000	5,230	700	
18-ft., 4-comp.	15,000	4,360	600	
Diaphragm:				
24-in., single-cell	1,000	550	50	
Addl. cells, each	900	500	25	
36-in., single-cell	2,000	650	60	
Addl. cells, each	1,800	600	30	
42-in., single-cell	2,400	750	75	
Addl. cells, each	1,900	650	40	
Jointer, 16-in.	1,800	370	30	Complete with motor.
Kiln, rotary:				
6×100-ft.	90,000	11,770	.....	Complete with air seal, firing hood, driving and supporting mechanism, and foundation bolts. No motor or brick.
7×110-ft.	147,000	15,950	.....	
7 1/2×125-ft.	178,000	19,300	.....	
8×125-ft.	205,000	22,000	.....	
8×140-ft.	248,000	25,300	.....	
9×140-ft.	343,000	34,100	.....	
9×160-ft.	377,000	37,400	.....	
10×164-ft.	425,000	40,700	.....	
10×175-ft.	447,000	42,400	.....	
10×230-ft.	655,000	61,700	.....	
11×250-ft.	760,000	71,500	.....	
Lathe:				
16×8-in.	2,150	3,370	25	Complete with motor.
30×30-in.	5,600	4,850	50	
13×8-in.	1,200	1,565	20	
Log washers: *see* Washers				
Lumber, per M.B.M.:				
Oregon fir, common	3,300	20	25–35¢	Freight will average about equal to sawmill costs of common lumber, as given, for average U. S. hauls.
minegrade	3,300	14	25–35¢	
Redwood	2,750	85	25–35¢	
Reclaimed	3,000	7.50–10	25–35¢	
Machine tools: *see* specific tools				
Merrill-Crowe: *see* Precipitation plant				
Milling machine, No. 2	3,600	1,590	40	Complete with motor.
Motors:				
Hp. R.p.m.				
Squirrel-cage, induction				
5 1,725	178	76	.....	A-c., 3-phase, 60-cycle, 110-, 220-, 440-, 550-volt, continuous-duty, ball-bearing. Motor and base only.
10 1,725	435	140	.....	
15 1,725	498	160	.....	
20 1,750	630	190	.....	
30 1,750	820	295	.....	
50 1,160	1,360	615	.....	
75 1,170	1,860	675	.....	
100 870	2,300	905	.....	
150 700	3,300	1,480	.....	
200 600	5,600	1,945	.....	
Wound-rotor				
5 1,135	355	220	.....	Sleeve-bearings, 220-, 440-, 550-volt. Motor and base only.
10 1,150	485	255	.....	
15 1,150	725	380	.....	

Table 57. Weights, factory costs, and labor costs for erecting the principal items of mill equipment.—*Continued*

Equipment	Size	G.p.m.	Head, ft.	Hp.	Factory weight, lb.	Factory price, 1938 *a, b*	Labor cost of erection	Remarks
Motors:—*Continued*								
20	1,155				835	$450	.....	
30	860				1,240	635	.....	No base.
50	865				1,600	825	.....	
75	690				2,600	1,235	.....	
100	580				3,450	1,575	.....	
150	585				5,400	2,030	.....	
200	600				5,900	2,360	.....	
Pipe-threading machine:								
4 to 1-in.					1,368	775	$20	Complete with motor.
8 to 2 1/2-in.					6,800	2,040	75	
Planer, 24×24 in.×6 ft.					7,400	3,270	80	
Precipitation plant, Merrill-Crowe:								
200 tons sol. per 24 hr.					11,000	3,100	250	Complete; filter press with precoat clarification.
500 tons do.					18,500	4,400	350	
1,000 tons do.					31,000	5,900	550	
Press, hydraulic: *see* Hydraulic press								
Pulleys, steel, split					.....	0.113*DF*	.....	*D* = diam., *F* = width of face, both in inches.
cast-iron, split					.....	0.126*DF*	.....	
cast-iron, solid					.....	0.113*DF*	.....	
Pumps:								R.p.m.
Centrifugal, water, single-stage:								
2 1/2-in.		50–150	100	7 1/2	430	216	20	1,740 With motor.
2 1/2-in.		150	110	7 1/2	300	195	20	3,500
2 1/2-in.		200	100	7 1/2	320	207	20	3,500
3	-in.	300	100	15	480	270	25	3,500
4	-in.	500	100	20	560	320	30	3,500
6	-in.	1,000	45	15	1,075	404	40	1,150
6	-in.	1,600	75	40	1,390	642	65	1,750
		120	54	3	340	180	18	Motor base, but without motor.
		200	200	20	340	185	18	
		350	75	10	625	200	25	
		425	150	25	640	225	25	
		550	135	30	660	240	25	
		600	75	15	650	225	25	
		650	240	50	625	225	25	
		700	124	30	850	250	30	
		775	184	50	975	350	35	
		1,000	180	60	650	230	25	
		1,400	138	60	1,350	395	40	
		1,700	65	40	1,100	315	35	
		1,750	210	125	1,550	440	45	
Centrifugal, water, 2-stage:								
		120	110	7 1/2	650	260	30	Motor base, but without motor.
		220	500	50	650	270	30	
		450	400	75	1,900	495	55	
		500	700	150	1,900	545	60	
		850	390	125	2,700	780	75	
		1,800	415	250	4,100	1,040	100	
Deep-well, turbine, water:								
Casing								
6 in.		25	50	3/4	1,000	300	50	Complete with motor. Delivery at surface. Head equals approx. length in well at drawdown. Interpolate for intermediate heads.
6 in.		25	400	7 1/2	5,700	1,350	150	
6 in.		50	50	2	1,600	450	50	
6 in.		50	400	10	9,400	2,000	150	
8 in.		100	50	2	1,600	450	60	
8 in.		100	400	15	9,700	2,000	200	
8 in.		200	50	5	2,000	600	60	
8 in.		200	400	30	13,700	2,700	200	
10 in.		400	50	7 1/2	2,400	650	75	
10 in.		400	400	60	20,000	3,450	275	
12 in.		900	50	15	3,000	750	100	
12 in.		900	400	125	29,000	5,125	350	
14 in.		1,800	50	40	4,700	1,350	125	
14 in.		1,800	400	250	39,000	8,350	375	

Table 87. Weights, factory costs, and labor costs for erecting the principal items of mill equipment.—*Continued*

Equipment	Factory weight, lb.	Factory price, 1938 *a, b*	Labor cost of erection	Remarks
Pumps:—*Continued*				
Size G.p.m. Head, ft. Hp.				
Sand, Hydroseal-type:				
25 120 8.6	800	$440	$25	Pump only.
400 40 17.8				
200 160 21	2,000	750	50	
1,500 70 68				
400 160 64	3,000	1,450	85	
3,200 80 145				
2,000 180 210	7,000	2,450	150	
7,000 140 404				
Sand, Wilfley-type:				
1-in.	690	300	20	Base for motor, direct-connected or V-belt, but without motor.
2-in. 175	1,090	375	25	
3-in. 300	1,350	500	35	
4-in. 500	2,275	685	50	
6-in. 950	3,450	925	60	
8-in. 2,000	5,650	1,450	100	
Triplex, plunger, water:				
6 1/2 × 8 241 100	3,700	1,100	100	
7 1/2 × 8 321 100	4,600	1,325	115	
9 1/2 × 8 501 75	5,800	1,550	145	
13 × 8 975 75	10,900	2,900	200	
Vacuum, piston-type:				
Cylinders Displacement, cu. ft. per min.				
2 32	250	205	10	No motor.
2 60	350	270	15	
2 93	675	345	17	
1 167	740	460	25	Belted.
1 250	1,075	700	35	
Vacuum, rotary-type:				
56–31	520	387	15	Water-cooled. Vacuum from 20 to 28 1/2 in. Hg.
109–62	580	510	16	
214–123	1,100	720	35	
402–230	1,750	1,060	50	
674–395	3,400	1,300	100	
1,195–750	6,100	1,830	150	
Punch and shear, up to 1/2-in.....	5,100	1,220	.....	Motor-drive.
Retort furnace, Fabre du Faure type:				
No. 3.....	4,000	670	.....	With crucible but without brick.
No. 9.....	6,680	1,060	.....	
Roasters, MacDougall:				
20-ft., 7-hearth.....	525,000	28,500	5,000	Including both ironwork and brickwork.
16 1/2-ft., 7-hearth.....	300,000	17,000	3,000	
10-ft., 7-hearth.....	200,000	10,500	2,000	
Rod mills:				
3×8-ft.....	21,000	3,200	200	Belt-drive; manganese-steel liners of wave or shiplap type, but without rods, motor, or control.
4×8-ft.....	37,000	6,000	375	
5×10-ft.....	47,000	7,000	470	
6×12-ft.....	81,500	12,400	800	
7×15-ft.....	160,000	23,000	1,400	
Rolls, standard:				
Diam. × face, in.				
Laboratory-type:				
9 × 9.....	1,350	438	20	
12 1/2 × 12.....	3,100	867	50	
Light:				
24 × 14.....	12,000	2,280	170	Forged-steel tires.
30 × 14.....	20,000	3,140	260	
36 × 16.....	27,000	3,820	350	
42 × 16.....	41,000	5,540	550	
Medium-heavy:				
40 × 15.....	38,000	6,050	475	Forged-steel shells.
40 × 20.....	47,000	7,480	590	

Table 57. Weights, factory costs, and labor costs for erecting the principal items of mill equipment.—*Continued*

Equipment	Factory weight, lb.	Factory price, 1938 *a, b*	Labor cost of erection	Remarks
Rolls, standard:—*Continued*				
40 × 30	54,000	$8,570	$675	
40 × 36	57,000	9,060	725	
42 × 16	80,000	12,780	1,000	
54 × 16	88,000	13,980	1,100	
54 × 20	90,000	14,300	1,125	
54 × 24	95,000	15,120	1,200	
Heavy-duty:				
36 × 16	43,200	6,690	525	Manganese-steel fitted.
37 1/2 × 16	44,000	6,910	550	
42 × 16	64,400	9,300	800	
43 1/2 × 16	65,300	9,550	825	
54 × 16	99,700	13,750	1,225	
54 × 18	101,200	14,100	1,250	
54 × 20	102,700	14,200	1,250	
54 × 24	106,000	15,000	1,300	
60 × 16	104,200	13,920	1,275	
60 × 18	106,100	14,360	1,300	
60 × 20	108,000	14,740	1,350	
60 × 24	112,000	15,890	1,350	
72 × 20	179,000	22,750	2,000	
72 × 24	186,000	24,250	2,000	
Samplers:				
Bridgeman, 1- to 2-in. feed	4,000	2,155	80	
Brunton	1,500	400	30	
Geco:				
Head: 21-in. travel, 2-in. max. feed	435	308	20	
Over 21-in. travel, per in.		3		
Pulp: 21-in. travel	330	275	15	
Over 21-in. travel, per in.		3		
Multiple: retaining	700	450	35	
Snyder:				
No. 1, 1/4–1 1/4-in. feed	420	123	10	
No. 2, 3/8–2 1/4-in. feed	1,130	239	20	
No. 3, 7/8–5-in. feed	2,370	462	45	
Tipping box	540	150	40	
Vesin:				
No. 1	680	429	15	
No. 2	1,050	476	20	
No. 3	1,830	572	35	
Saws:				
Band	1,700	400	30	Complete with motor.
Hack	950	373	10	Do.
Rip, 14-in.	1,350	251	20	Do.
Scales:				
Track:				
125-ton, 50-ft	18,000	3,250	600	
100-ton, 50-ft	15,200	2,470	500	
Weightometer, Merrick:				Built to order to suit belt and tonnage; 3 to 3,000 tons per hr.
Minimum	2,200	1,500	100	
Maximum	2,600	2,500	125	
Screens:				
Revolving stone:				
24-in. × 4-ft	2,670	735	70	Wood frame; no screen jacket, no housing.
24-in. × 12-ft	3,630	870	85	
32-in. × 6-ft	4,660	1,050	100	
32-in. × 20-ft	7,750	1,440	135	
40-in. × 8-ft	7,600	1,415	135	
40-in. × 24-ft	11,500	2,110	200	
48-in. × 8-ft	12,200	1,615	150	
48-in. × 24-ft	18,000	2,715	250	
60-in. × 10-ft	19,000	2,750	250	
60-in. × 24-ft	25,000	3,485	300	
72-in. × 8-ft	26,000	4,625	400	
72-in. × 24-ft	35,000	5,420	500	

Table 57. Weights, factory costs, and labor costs for erecting the principal items of mill equipment.—*Continued*

Equipment	Factory weight, lb.	Factory price, 1938 *a, b*	Labor cost of erection	Remarks
Screens:—*Continued*				
Trommel:				
30×60-in.	1,000	$200	$20	
36×72-in.	1,200	250	25	
42×90-in.	1,800	300	30	
48×108-in.	2,400	350	35	
Vibrating:				
Light-duty, single-deck:				
1 1/2×3-ft.	300	335	10	Complete with motor.
2×4-ft.	500	500	15	
3×6-ft.	800	620	20	
Light-duty, double-deck:				
1 1/2×3-ft.	350	385	12	
2×4-ft.	600	620	20	
3×6-ft.	900	710	25	
Heavy-duty:				
Single-deck:				
2×6-ft.	2,340	1,200	35	
3×8-ft.	3,000	1,400	40	
4×10-ft.	4,000	1,620	50	
5×12-ft.	5,800	2,000	60	
Double-deck:				
2×6-ft.	3,000	1,340	40	
3×8-ft.	4,100	1,660	50	
4×10-ft.	6,900	2,160	60	
5×12-ft.	8,200	2,770	80	
Triple-deck:				
2×6-ft.	3,700	1,590	45	
3×8-ft.	6,500	1,970	60	
4×10-ft.	7,900	2,200	70	
5×12-ft.	9,800	3,000	90	
Scrubbers: *see* Washers				
Shafting: per foot				
1 7/16-in.	5 1/2	0.55	.....	Average keyseating.
1 15/16-in.	10	1.00	.....	
2 7/16-in.	16	1.60	.....	
2 15/16-in.	23	2.30	.....	
3 7/16-in.	31	3.10	.....	
Shaper:				
16-in.	2,200	970	25	Complete with motor.
20-in.	3,150	2,200	35	
Single-roll crusher:				
24×48-in.	58,000	14,850	1,000	Manganese-steel concave.
24×60-in.	62,000	15,680	1,100	
36×60-in.	140,000	29,200	2,000	
60×84-in.	480,000	71,400	7,500	Chilled-iron concave.
Tables, shaking, Wilfley-type:				
Steel base	2,900	490	45	
For concrete base	2,000	425	20	
Tanks, fir:				
Staves, in.				
8×8-ft. 2	1,350	70	10	Banded for 1.5 spec. grav.
10×10-ft. 2	2,050	104	15	
12×12-ft. 3	4,700	215	30	
16×12-ft. 3	6,600	300	45	
30×20-ft. 3	25,000	1,235	185	
12×10-ft. 3	4,100	185	28	
20×10-ft. 3	7,800	355	55	
30×10-ft. 3	14,000	640	95	
40×12-ft. 3	25,000	1,175	175	
50×12-ft. 3	34,000	1,630	250	

Table 57. Weights, factory costs, and labor costs for erecting the principal items of mill equipment.—*Continued*

Equipment	Factory weight, lb.	Factory price, 1938 *a, b*	Labor cost of erection	Remarks
Thickeners:				
Cone: 8-ft.	650	$150	$25	
Continuous:				
12-ft.	6,000	650	120	Revolving-rake mechanism, and steel superstructure; tank extra.
20-ft.	12,000	1,400	250	
30-ft.	20,000	2,000	350	
40-ft.	32,000	3,000	450	
50-ft.	51,000	5,000	600	
Torch: *see* Acetylene				
Transformers:				
10 kv.-a.	550	210	25	3-phase, 11,500-v. to 230- and 460-v.; with oil but no auxiliary equipment.
25 kv.-a.	950	430	50	
50 kv.-a.	1,600	650	65	
100 kv.-a.	3,000	1,050	105	
200 kv.-a.	4,500	1,610	160	
300 kv.-a.	5,700	2,080	210	
450 kv.-a.	6,500	2,590	260	
Transmission: complete mill, per lb.	.....	20–38¢	4–5¢	
Trommels: *see* Screens				
Vacuum pumps: *see* Pumps				
Washers:				
Blade:				
5-ft.5-in. × 9-ft.9-in.	30,000	7,500	450	Trunnion-type; welded-steel shell; gear speed reducer; no motor.
7 × 15-ft.2-in.	76,000	11,200	1,150	
8 × 19-ft.	98,000	15,860	1,500	
Log:				
20-in. × 12-ft.	16,000	4,590	240	Hutch-type; 3-hp., 3-phase, 60-cycle; 220-, 440-, or 550-v. slip-ring motor.
20-in. × 17-ft.	18,000	4,790	270	
16-ft., standard	35,000	7,170	520	Friction clutch, no motor.
16-ft., hutch-type	37,000	7,560	550	
18-ft., standard	19,000	4,400	290	Plain-type, friction clutch, no motor.
18-ft., hutch-type	21,000	4,800	300	
25-ft., standard	43,000	8,800	650	Plain-type, friction clutch, no motor.
25-ft., hutch-type	45,000	9,200	675	
Screw:				
Single:				
16-in. × 12-ft.	3,900	1,320	60	Complete with steel frame and tank; drive not included.
16-in. × 15-ft.	4,600	1,420	70	
20-in. × 12-ft.	4,200	1,450	65	
20-in. × 15-ft.	4,800	1,550	75	
Double:				
16-in. × 12-ft.	5,500	1,420	80	Complete with steel frame and tank; drive not included.
16-in. × 15-ft.	6,200	1,520	90	
20-in. × 12-ft.	6,000	1,570	90	
20-in. × 15-ft.	6,700	1,665	100	
Scrubbers, rotary:				
5 × 8-ft.	25,400	6,000	375	3-phase, 60-cycle, 220-, 440-, or 550-v. slip-ring motor and gear guards. Texrope, guard, and wood frame not included.
5 × 12-ft.	28,800	6,180	425	
5 × 16-ft.	32,000	6,960	475	
6 × 10-ft.	30,600	6,380	450	
6 × 15-ft.	46,200	8,500	700	
6 × 20-ft.	52,800	9,490	800	
Weightometer: *see* Scales				
Welding outfit: *see* Acetylene				
Wiring, electrical:				
Interior lighting, per drop	.....	11–14	.....	
Interior power, per hp.	.....	3–7	.....	

a A list of 360 tons (35 items) of crushing and grinding equipment, and all accessories, priced as for 1938, showed an increase of 20 to 25% over 1924 prices as quoted in *Ed. 1*, p. 1333 *et seq.* Transmission equipment increased 25 to 35%.

b Data in this column are by courtesy of the following companies: Allen-Sherman-Hoff Co., Allis-Chalmers Mfg. Co., Alloy Steel & Metals Co., Colorado Iron Works Co., Deister Concentrator Co., Denver Equipment Co., Eimco Corporation, Galigher Co., Hardinge Co., Ingersoll-Rand Co., Link-Belt Co., Merrick Scale Mfg. Co., Merrill Co., Mine & Smelter Supply Co., Morrison-Merrill Co., Peerless Pump Division, Roots-Connersville Blower Corp., Smith Eng. Works, Southwestern Eng. Co., Western Machinery Co., Wilfley & Sons Co., Worthington Pump & Machy. Corp.

c D = shaft diameter, in. *d* Without balls, motors, or control.

e Or, Price = $\sqrt{\text{Hp. @ 100 r.p.m.}} \times \$30$ for sizes up to 90 hp.; from 90 to 250-hp.,

Price = $\sqrt{\text{Hp. @ 100 r.p.m.}} \times \$50$.

f For other sizes and spacings, weights and prices per pound may be estimated on the basis of those here given.

Table 58. Amount and cost of excavation at typical mills

Locality	Year	Cu. yd. excavated	Material	Cost per cu. yd.
Arizona	1914	1,800	Solid hard rock	$2.47
Balkans	1938	.....	Soil	0.60
Idaho	1907 to 1921	5,000	Loose rock and earth	0.88
		650	Gravel and shale	0.80
		3,360	Clay and gravel	0.60
Kenya	1935	2,000	Soil	0.20
Montana	1907 to 1921	.....	Medium hard rock	1.50
Nevada	1907 to 1921	915	Medium and soft earth	0.55
		1,155	" " " "	0.75
New Mexico	1926	12,300	Clay and rock	1.50
Philippine Is.	1934	46,500	Soil and altered diorite	0.10
	1935 to 1938	10,000	Soil and volcanic breccia	0.30
Quebec, Canada	1936	5,000	Clay, by hand	1.10
Quebec, Canada	1938	.....	Clay, by power	0.30
Rhodesia, South *a*	.....	3,450	Rock	1.35
Rhodesia, South	1937	4,050	Soil	0.75
South Carolina	1937	3,800	Sand and clay	0.10
Turkey (estimate)	1938	.....	Rock	1.45
Utah	1907 to 1921	6,000	Medium soft earth	1.17

a Average of five.

Table 59. Volume and cost of concrete work at mills

Locality	Plant	Capacity, tons per day	Cu. yd. concrete placed	Cost per cu. yd. of concrete				Total cost		Year
				Rock, sand, gravel	Cement	Form lumber	Labor	Plain	Reinforced	
Africa, South	Av. of 7 estimates	185	550	*a*	$8.50	*a*	$13.30	$21.80	.....	1935–7
Australia	Mount Isa	2,000	15,300	$3.60	11.80	$3.80	13.77	33.07	$41.00	1931–2
Aver. 5 plants, Inter-Mt. States, U. S. A.	.....	400	1,000	*a*	3.77	*a*	4.73	8.50	.....	1914–22
Canada	East Malartic	1,000	1,550	*a*	4.60	1.54	6.19	12.33	16.57	1938
Idaho	Pend Oreille	600	1,000	1.20	2.80	.....	.....	.....	.....	.....
Idaho	B. H. & Sull.	1,200	1,835	2.50	5.50	1.25	4.50	14.25	.....	1908
Kenya	Kimingini	100	288	*a*	9.60	*a*	18.90	28.50	.....	1935
New Mexico	Am. Metal	650	2,600	.....	.....	.....	.....	19.90	.....	1926
Philippine Is.	Irogon	1,000	.....	1.80	7.90	*a*	*a*	.....	9.70	1934
Philippine Is.	Demonstration	350	2,260	1.46	3.15	1.06	1.86	7.53	9.82	1934
Philippine Is.	I. X. L. Mining Co.	400	6,000	3.00	3.00	1.50	8.00	15.50	.....	1935–8
South Carolina	Haile	160	457	3.45	3.10	1.00	4.25	11.80	.....	1937
Tanganyika	East African G. F.	250	350	*a*	30.00	*a*	10.00	40.00	.....	1938
Turkey (est.)	Murgul	1,500	2,450	*a*	18.45	*a*	19.00	37.45	.....	1938

a Included with cement.

Underestimating the cost of a proposed job is invariably due to failure to list properly all the items composing the installation and the work to be done to complete the plant to the point of actual operation. Care in this particular is really more important than precision as to each item, for in the very long list of items always needed, individual errors will tend to compensate.

The list should next be SEGREGATED according to the character and source of the materials: ore-dressing equipment (further subdivided as to specialties offered by particular manufacturers); motors and electric appliances; shafting, pulleys, clutches, speed reducers, etc.; belts; piping, valves and fittings; lumber; roofing and siding materials; windows; paints; structural steel work (not usually necessary to list in detail—see Art. 13); boilers; engines. Bids are then invited from manufacturers of the respective classes, stating weights, prices, and time of delivery. Bids should be scrutinized, not only as to prices and quality, but also to insure that each one covers exactly the amount and kind of material wanted; freight charges to the millsite may affect comparison of factory prices. A convenient form for final presentation is suggested in Table 60, in which different items are definitely segregated. Machinery should be subdivided as to principal, electrical, and miscellaneous, all f.o.b. factory. Labor should comprise all labor, namely: erecting principal, electrical, and miscellaneous machinery, steel work and lumber, mixing and placing concrete, handling and moving machinery at millsite. Freight and hauling should include all charges of this kind between the factory and millsite. This generalized tabulation should be supported by full and complete lists covering every item, giving factory costs and weights, gross or shipping weights; also horsepower in detail. Following the same

Table 60. A form of cost estimate

PRELIMINARY ESTIMATE AND FINAL SUMMARY

200 tons per day roasting and cyanide plant for ..... Co.
See Drg. No. ..... Dated ..... 19....
By the ..... Engineering Co.

Division	Item Nos.	Segregations	Net tons	Unit costs	F.o.b. cost	Per cent. total cost	Motor hp.
A	1–33	Principal machinery	664.12	$229.00/ton	$152,060	37.2	
B	34–37	Electrical machinery	19.8	757.50/ton	14,960	3.66	
C	40–42	Miscellaneous machinery	1.08	1,325.00/ton	1,430	0.34	
		Totals A, B, C	685.0	$246.25	$168.450	41.2	464.5
D	43–44	Steelwork	197.0	$101.00/ton	$ 19,885	4.8	
E	45	Lumber, 26.4 M. B. M.	44.0	148.50/M.	3,925	0.9	
F	47–48	Brick, 240 M.	1,291.0	36.00/M.	8,640	2.1	
G	46	Concrete matl., 790 cu. yd.	1,375.0	2.67/yd.	2,110	0.5	
H	49–54	Labor, 1,830 man-days @	.....	3.50/day	63,760	15.7	
I	55	Excavations, 15,500 yd. @	.....	0.625/yd.	9,690	2.4	
J	56	Freight and hauling	1,283	50.00/ton	64,150	15.7	
K	57–58	Supt. construction, 6 mo.	.....	890.00/mo.	5,330	1.3	
L	59	Contingencies, A–K	10% on	$345,900	34,590	8.4	
		Totals D–L	2,907.0	.....	$212,080	51.8	
M	60	Engineering & Expenses	7 1/2% on $380,530		$ 28,540	7.0	
A–M		Grand totals	3,592.0	$114.00/ton	$409,070	100	464.5

Ratio A, B, C machinery costs to all other costs: $\frac{\$240,620}{\$168,450} = \$1 : \$1.43$

Total labor bill per ton of machinery installed: $\frac{\$63,760}{685} = \$93$ per ton of machinery

Total cost of plant per 24 hr.-ton of ore treated: $\frac{\$409,070}{200} = \$2,045.35$ per 24 hr.-ton

Hp. per 24 hr.-ton of ore treated: $\frac{464}{200} = 2.32$ hp. $= 41.5$ kw.-hr. per ton

segregation as above, but in more detailed form, volumes of excavations and foundations, steel, lumber, cement, concrete aggregate, etc., should be tabulated; similarly, all other constructional materials. An accompanying tabulation should also express the final estimates departmentally, as for instance, coarse-crushing, fine-grinding, concentrating, flotation, and cyanidation; also transformer station or powerhouse, machine shops, warehouse, water supply, and tailing.

SECTION 21

MATHEMATICS

BY

PERCEY F. SMITH, EMERITUS PROFESSOR OF MATHEMATICS,

YALE UNIVERSITY

ART.		PAGE
	ARITHMETIC	
1.	Approximate computation	01
	ALGEBRA	
2.	Fundamental operations	07
3.	Equations	09
4.	Determinants	13
5.	Exponents	14
6.	Chance	14
7.	Progressions	15
8.	Binomial theorem	15
9.	Interpolation	15
10.	Complex numbers	16
11.	Precision of measurements	17
12.	Interest and annuities	19
	GEOMETRY	
13.	Plane figures	20
14.	Mensuration of solids	26
	TRIGONOMETRY	
15.	Functions of an acute angle	28
16.	Solution of plane triangles	32
	ANALYTIC GEOMETRY	
17.	Formulas using co-ordinates	33
18.	Curves and standard equations	34
19.	Locus problems and parametric equations	40
	CALCULUS	
20.	Derivatives	42
21.	Applications of differential calculus	44
22.	Series	47
23.	Integration	49
24.	Applications of integral calculus	53
25.	Derivation of formulas for experimental data	56
26.	Charts for empirical formulas	58

ARITHMETIC

Numerical engineering data are rarely accurate to the extent that is implied in numbers viewed in absolute mathematical sense.

1. APPROXIMATE COMPUTATION

Significant figures (1) * are those digits of a number concerning which accurate and approximate knowledge are, respectively, avouched. Number 6,347 has four significant figures. Digits 6, 3, and 4 are impliedly accurate and in proper order; the 7 implies only that the truth is nearer to 7 than to 6 or to 5. Number 0.6347 avouches that the truth lies between 0.63465+ and 0.63475− units: the number 634,700 warrants the truth to lie between 634,650+ and 635,750−. A significant number ending in an even digit implies a possible range of $+1/2$ in the last significant digit, *i.e.*, 5,376 implies a range in value from 5,375.5 to 5,376.5, whereas 5,377 implies a range of ± 0.4, *i.e.*, from 5,377.4 to 5,376.6; because final 5's are ROUNDED OFF to make the preceding digit even.

Fundamental arithmetic calculations. Since the last digit in any significant number is doubtful, any result into which it enters is doubtful. Retain in a sum or difference only those digits from columns in which all digits are significant. Retain in a product only those numbers not resulting from multiplication by the final significant figure in that factor with the smaller number of significant figures. In general, the number of significant figures in a product will be equal to, or one more than, the lesser of the numbers of significant figures in the factors, according to whether the multiplication of the left-hand numbers of the factors adds a digit (is >10 with the carry over). Retain in a quotient as many significant figures as there are in the lesser of the dividend and divisor.

* Boldface figures in parentheses in text refer to items in ***Bibliography.***

Accurate numbers. If either factor in a multiplication or division is accurate, the product or quotient is significant to the extent that it includes the last figure to the left that has been involved with a doubtful number.

Errors in tables. The numbers in the usual mathematical tables, and those in substantially all engineering tables, are approximations, rarely accurate in the last digit, and frequently, in engineering tables, not significant in the last two or more digits. Since multiplication always, addition usually, and subtraction and division in some instances cumulate errors, results must be studied carefully to determine the extent of significance.

Rules of error. In a sum or difference the ABSOLUTE ERROR (actual difference between approximate and actual values) of the result is not greater than the sum of the absolute errors of the entering terms.

In a product or quotient the relative error (ratio of absolute error to exact value) is not substantially greater than the sum of the relative errors of the terms.

Interpolation in tables is based on the assumption that the variation between tabular intervals is linear (Art. 9). Error in the interpolated result depends upon the tabular interval and the function tabulated; in five-place mathematical tables it is rarely greater than one unit in the last figure.

LOGARITHMS

The logarithm of a given number a is the power to which some constant number (base) must be raised to produce a. The base of the usual tabular logarithms is 10. Hence if $a = 10^m$, $\log a = m$, which may be less or greater than 1.0 and is usually a MIXED (not a whole) NUMBER. Tables of logarithms give the decimal part of the logarithm (MANTISSA); the number preceding the decimal point (CHARACTERISTIC) is determined by the magnitude of the given number.

Simple formulas for use of logarithms. If a and b are any given numbers

$$\log (a \times b) = \log a + \log b$$
$$\log (a/b) = \log a - \log b$$
$$\log (a)^n = n \log a$$
$$\log \sqrt[n]{a} = (\log a)/n$$

Rules for characteristic. The characteristic of a whole or mixed number is one less than the number of digits preceding the decimal point, and is positive. The characteristic of a decimal fraction is negative and equal to one more than the number of ciphers preceding the first significant figure.

Logarithm of a number is the sum of the mantissa and the characteristic. Its positive or negative character is determined by the sign of the characteristic only; the logarithm of a negative number is the same as that of the same number positive ($\log (-8) = \log 8$).

To find the logarithm of a number, first set down the characteristic by inspection (Table 1), then find the mantissa from tables (*e.g.*, Sec. 22, Table 20). (Such tables are designated 4-place, 5-place, etc., to indicate the number of significant figures in the mantissa, and the maximum number of significant figures in the result that they yield. The entry number has two less digits than the number of places.) Enter with the first digits of the given number, proceed horizontally to the vertical column corresponding to the digit following the entry digits, add to the number there found the number from "Proportional parts" corresponding to the next digit (rounded off) of the given number; the sum is the required mantissa.

Example 1. Wanted log 4,128. Characteristic = 3. Mantissa (from Table 20, Sec. 22): Enter at 41, proceed horizontally to column headed "2," add to the last digit of 0.6149 there found the number 8, found in column 8 under "Prop. parts," giving 0.6157. Add this to characteristic, whence log 4,128 = 3.6157.

Table 1. Characteristics of logarithms and cologarithms

Characteristic of logarithm	Number	Characteristic of cologarithm
	4 3 2 1 . 1 2 3	
3	6 7 4 2 .	6, 7, 8, 9 } −10
2	6 7 4 . 2	
1	6 7 . 4 2	
0	6 . 7 4 2	
9	0 . 6 7 4 2	0
−10 { 8	0 . 0 6 7 4 2	1
7	0 . 0 0 6 7 4 2	2
6	0 . 0 0 0 6 7 4 2	3
	etc.	

Example 2. Wanted log 0.0002953. Characteristic (Table 1) is −4. Mantissa, considering sequence of significant figures without regard to preceding ciphers, is 0.4702 (see Ex. 1). Log = −4 + 0.4702 = $\bar{4}$.4702 = 6.4702 − 10. The final form is normally used for convenience in calculation (see p. 03).

Cologarithm of a number is the logarithm of the reciprocal of the number. Since $a/b = a \times 1/b$, $\log (a/b) = \log a + \operatorname{colog} b$.

To find the cologarithm of a number: (1) Find the logarithm and subtract from zero (= log 1). Colog 4,128 = 6.3843 − 10 = 4.3843. Colog 0.00002953 = 4.5298. (2) Set down characteristic by inspection and get mantissa from table of logarithms of reciprocals (Table 22, Sec. 22). Characteristic of the cologarithm of a whole or mixed number is equal to the number of digits preceding the decimal point, and is negative; that of a decimal fraction is positive and equal to the number of zeros preceding the first significant figure (see Table 1). Mantissa is found from the table as for the mantissa of a logarithm, *except* that proportional parts are subtracted.

Antilogarithm ($\log^{-1}$) is the number corresponding to a given logarithm. To find: locate the mantissa of given logarithm in usual log tables and read corresponding number; place decimal point according to characteristic. Table 23, Sec. 22, entered by the given mantissa, reads the digit sequence of the desired number directly.

Calculation with logarithms. Most arithmetic calculations are based on the simple formulas (p. 02).

Multiplication. Find logarithms of numbers, add them; find antilogarithm of sum. Point off to correspond with characteristic.

Example: Multiply 3,923 by 0.00007218

log 3923	= 3.5936
log 0.00007218	= 5.8584 − 10
log product	= 9.4520 − 10
$\log^{-1}$	= 0.2831 *Ans.*

Division. Find logarithm of numerator; find cologarithm of denominator; add; find antilogarithm of sum. Point off to correspond with characteristic.

Example 1. Divide 3,923 by 0.00007218

log 3,923	= 3.5936
clg 0.00007218	= 4.1416
log quotient	= 7.7352
$\log^{-1}$	= 54,360,000 *Ans.*

Example 2. Divide 0.00007218 by 3,923

log 0.00007218	= 5.8584 − 10
clg 3,923	= 6.4064 − 10
log quotient	= 12.2648 − 20
$\log^{-1}$	= 0.00000001840 *Ans.*

Powers. Find logarithm of number; multiply by power; find antilogarithm of product. Point off to correspond with characteristic.

Example 1. Compute $(2{,}953)^2$

log 2,953	= 3.4702
Multiply by 2	= 6.9404 = log result
$\log^{-1}$	= 8,718,000 *Ans.*

Example 2. Compute $(0.2953)^2$

log 0.2953	= 9.4702 − 10
Multiply by 2	= 18.9404 − 20 = log result
$\log^{-1}$	= 0.08718 *Ans.*

Example 3. Compute $x = (2{,}953)^{3.672}$

log x	= 3.672 × (log 2,953)
log 2,953	= 3.4702
Multiply by 3.672 (Use logarithms)	
log 3.470	= 0.5403
log 3.672	= 0.5649
log log result	= 1.1052
$\log^{-1}$ log result	= 12.75 = log result
$\log^{-1}$	= 5.6×10^{12} *Ans.*

Example 4. Compute $x = (0.02953)^{0.03672}$

log x	= 0.03672 (log 0.02953)
log 0.02953	= 8.4702 − 10
	= −2 + 0.4702 = −1.5298
log −1.5298	= 0.1847
log 0.03672	= 8.5649 − 10
log log x	= 8.7496 − 10
log x	= −0.05618 (= −1 + 0.9438)
	= 9.9438 − 10
x	= 0.8788 *Ans.*

Multicomponent fraction. Find logarithms of components of numerator and cologarithms of components of denominator; add; find antilogarithm of sum.

Example. Compute $x = \dfrac{3.62 \times \sqrt[3]{9{,}349} \times 0.6218 \times (728.7)^3}{\sqrt[3]{43.29} \times 86.2 \times 0.0003294 \times (3.32)^4}$

log 3.62	= 0.5587		0.5587
log 9,349	= 3.9707	1/2 log 9,349 =	1.9854
log 0.6218	= 9.7937 − 10		9.7937 − 10
log 728.7	= 2.8625	3 log 728.7 =	8.5875
clg 43.29	= 8.3636 − 10	1/3 clg 43.29 =	9.4545 − 10
clg 86.2	= 8.0645 − 10		8.0645 − 10
clg 0.0003294	= 3.4823		3.4823
clg 3.32	= 9.4789 − 10	4 clg 3.32 =	37.9156 − 40
log x	=		79.8422 − 70
x	= 6,953,000,000		
	= $6.953 \cdot 10^9$ *Ans.*		

Errors. In computations such as are illustrated above, errors in final logarithms are introduced which may be appreciably greater than the error of the tables. The latter may be assumed to be not greater than half a unit in the last decimal place, although it may, by interpolation, be a whole unit at times. Hence, for example, in raising a number to fifth power, an error of five units may occur in the final logarithm and this may lead to an error, in the number itself, of one unit in the third significant figure. Computation with four-place tables does not ensure more than three-figure accuracy. Tables

with mantissas carried out to five or more places are essential for accuracy to four or more significant figures. Such tables are available in great variety (**2**).

Natural, or Napierian, logarithms. The base of this system is 2.71828 . . . (to five places), denoted by e. $10^{0.43429\cdots} = 2.71828$. Common logarithm equals the natural logarithm times 0.43429, which number is called the MODULUS of the common system. Natural log = common log times 2.3026. The abbreviation NAP LOG or LN is used for natural or Napierian logarithm.

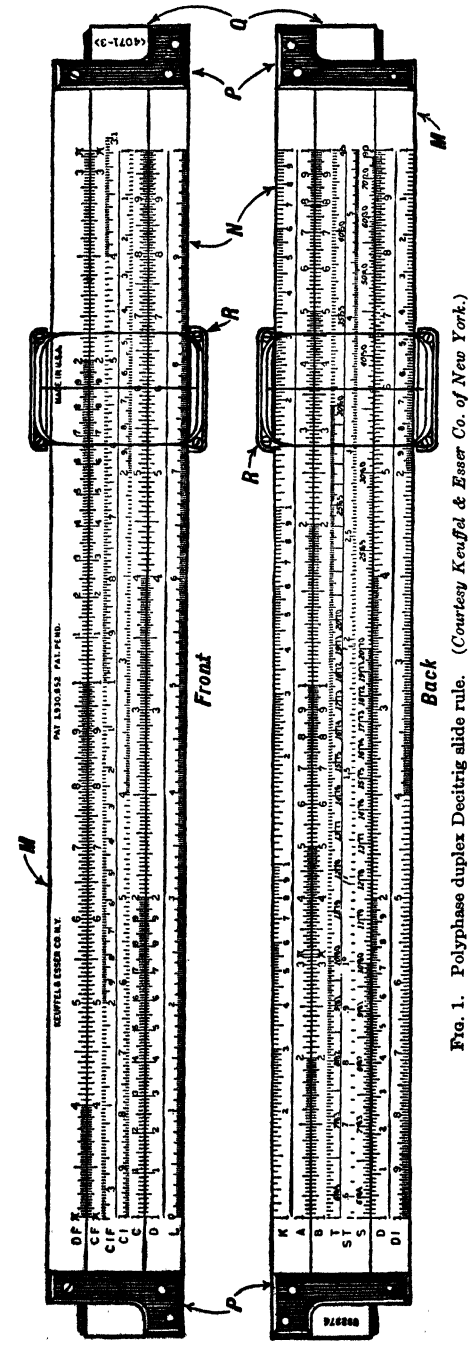

FIG. 1. Polyphase duplex Decitrig slide rule. (*Courtesy Keuffel & Esser Co. of New York.*)

Slide Rule

Description. The slide rule is essentially a mechanical device for adding, subtracting, multiplying, and dividing logarithms, and thus performing the same calculations as those illustrated on p. 03. Fig. 1 illustrates a convenient form. It consists of a frame comprising two bars M and N, rigidly fastened together by end members P; a single slide Q; and a single runner R. Bars M and N and slide Q are ruled both sides with a variety of scales; runner R carries two hairlines (one on each face of the rule) in registry with each other. Standard length is 10 in. (10-in. rule); 5-in. and 20-in. rules are readily available; rules with lengths of several feet are made by winding the scales spirally on cylinders. Accuracy in setting and reading increases with length of scale (**3**).

Scales C and D (Fig. 1, front) are logarithmic, *i.e.*, the logarithms of numbers from 1 (log = 0) to 10 (log = 1) are laid out to a linear scale (10 in. long on a 10-in. rule) and the points are labeled with the numbers. If, now, 1 on the C-scale is brought to, say, 2 on the D-scale, and any number, say 2, on the C-scale is selected, the distance on the D-scale from 1 to the point now corresponding to 2 on the C-scale is the logarithm of 2 (distance 1 to 2 on the D-scale) plus the logarithm of 2 (1 to 2 on C-scale = distance 1 to 2 on D-scale). This sum is log 4, and is labeled 4 on D-scale. The rule has thus added log 2 + log 2, and given the product $2 \times 2 = 4$. Similarly, if any point, say 2, on the C-scale is brought to any other point, say 6, on the D-scale, and the reading on D corresponding to 1 on C is taken, it will be seen that the distance from this point to 1 on the D-scale is log 6 minus log 2, and that the difference on the D-scale is marked 3 (*i.e.*, = log 3), so that the rule has divided 6/2 to give the answer 3. It makes no difference which 1 on the C-scale falls on the D-scale in these manipulations; the rule acts the same as though the C- and D-scales were laid out on a circle of 10 in. circumference, with the two 1's on each scale coincident (such rules are made).

Scale A (Fig. 1, back) is a double logarithmic scale, and scale K a triple logarithmic

scale, comprising respectively two and three scales from 1 to 10, set end to end in a 10-in. over-all length. The initial (left-hand) and final (right-hand) 1's on the D-, A-, and K-scales are all in vertical registry. Hence the logarithmic distance traversed along scale A for any given movement of the runner is twice that traversed on scale D, *i.e.*, scale A multiplies the logarithms of scale D by 2, and thus squares the numbers of scale D. Conversely the numbers on scale D are the square roots of those on scale A. Similarly the numbers on scale K are the cubes of those on scale D, and those on scale D are the cube roots of those on scale K. Again, the numbers on scale K are the 3/2 powers of those on scale A, and those on scale A are the 2/3 powers of those on scale K.

Scale DF (D-folded) may be considered to be made by cutting scale D at the value for π and then joining the parts so that the 1's at the ends of original scale D exactly coincide. The scale is mounted so that the value π is in registry with the values 1 and 10 of scale D. The result is that all numbers on DF are π times those in vertical registry on D; conversely those on D equal those on DF divided by π. Scale CF is the same as scale DF, and hence bears the same relation to scale C that DF bears to D, and the two folded scales bear the same relation to each other as do C and D.

Scale CI (C-inverted) is the same as scale C except that it is laid out from right to left on the slide. Hence its readings are the reciprocals of those on the C-scale. Similarly, CIF (C-inverted folded) is the same as CF except that it runs from right to left. Both of these scales are numbered in red to warn that they must be read in the unusual (right-to-left) direction.

Scale L is a scale of logarithms when it is read in connection with scale D. Actually it is a simple linear scale marked into inches and fiftieths. Numbers thereon, when read in accord with the scale markings and preceded by a decimal point, are mantissas of the logarithms of the numbers on scale D.

The S-scale (sine scale), when in registry against scale A, gives the angles corresponding to the numbers on scale A, taken as decimals, those on the left-hand half of the A-scale being read with a cipher before the first significant figure. Conversely the sine of angles from approximately 34′ to 90° may be read on A above the corresponding angles on S when the scales register. Thus sine 40′ is 0.0116; that for 4° is 0.0698; for 6° is 0.1045; and for 20° is 0.3420.

The T-scale (tangent scale) similarly gives values for the tangents of angles from about 6° to 45° when read against the D-scale. For angles greater than 45° use the formula $\tan (90 - x) = 1/\tan x$. Thus tan 40°, read directly on D, is 0.839. Tan 60° = 1/tan 30 = 1/0.577 = 1.732. For angles less than 5° 43′, sine = tangent with sufficient accuracy for slide-rule calculation.

Common Slide-Rule Calculations

Multiplication. (a) Set 1 (either end) of C to one factor on D; set runner over other factor on C; read product under hairline on D.

(b) Set 1 on CF to one factor on DF; set runner to other factor on CF; read product under hairline on DF.

(c) Set 1 on CF to one factor on DF; set runner to other factor on C; read product on D under hairline.

Division. (a) Set runner to dividend on D; bring divisor on C under hairline; read quotient on D under 1 on C (either end); or on DF over 1 on CF.

(b) Set runner to dividend on DF; bring divisor on CF under hairline; read quotient on DF over 1 on CF, or on D under 1 on C (either end).

(c) Set 1 on CI to dividend on D; bring runner to divisor on CI; read quotient on D under hairline. Or with the same setting of slide, bring runner to divisor on CIF and read quotient under hairline on DF.

(d) Set runner to divisor on D (or DF); set dividend on C (or CF) to hairline; read quotient on C over 1 on D (or read on CF under 1 on DF).

Proportion. For any relative positions of scales C and D, all corresponding numbers thereon (as marked, *e.g.*, by the hairline on the runner) are in the same proportion, as are also all corresponding numbers on CF and DF. Thus if 4 on D (or DF) is set at 2 on C (or CF), all numbers on D (or DF) are twice those with which they register on C (or CF); conversely, all on C (or CF) are one-half those with which they register on D (or DF).

Squares. Set runner to number on D (either side); read square on A. Numbers on left half of A-scale have an odd number of digits preceding decimal; those on right half an even number. To keep track of decimal point, unless it can be done mentally, write it as a number with one digit before the decimal × a power of 10; square the number on the rule; multiply by the square of the 10 factor.

Example 1. Compute $x = (1643)^2$. $1643 = 1.643 \times 10^3$. $(1.643)^2 = 2.72$. $(10^3)^2 = 10^6$. $x = 2.72 \times 10^6$.

Example 2. Compute $x = (0.0005431)^2$. $0.0005431 = 5.431 \times 10^{-4}$. $(5.431)^2 = 29.7$ $(10^{-4})^2 = 10^{-8}$. $x = 0.000000297$.

Square root. Mark off that part of number to left of decimal point into groups of two digits, beginning at the decimal point. Write the number as the product of the largest even power of 10 that will leave a mixed number of one or two digits before the decimal point and that mixed number. Set the runner on A to the mixed number (right-hand part of scale if this has two digits before the decimal; otherwise left end) and read square root under hairline on D. Take square root of powers of 10. Multiply the resulting two factors for square root of original number.

Example 1. Compute $x = \sqrt{694{,}371.2}$. Mark off: 69′ 43′ 71.2. This = 69.43712×10^4. $\sqrt{69.44} = 8.33$. $\sqrt{10^4} = 10^2$. $x = 8.33 \times 10^2 = 833$.

Example 2. Compute $x = \sqrt{0.000069.44}$. Mark off (to right of decimal): 0.00′00′69′44. This $= 69.44 \times 10^{-6}$. $\sqrt{69.44} = 8.33$. $\sqrt{10^{-6}} = 10^{-3}$. $x = 8.33 \times 10^{-3} = 0.00833$.

Cubes. Set runner to number on D (either side); read cube on K. When numbers taken on D lie between 1 and 10, numbers on the left-hand third of K lie between 1 and 10, those in central third between 10 and 100, and those in right-hand third between 100 and 1,000. Hence to keep track of decimal point, write the number to be cubed as a mixed number with one digit before the decimal × a power of 10, and proceed as described for squares.

Cube root. Principle is the same as in extracting square root, but mark-off is in 3's and residual whole number may have 1 to 3 digits before the decimal.

Example. Compute $x = \sqrt[3]{8{,}321{,}749}$. Mark off and factor: $8'321'749 = 8.32 \times 10^6$. $x = 2.02 \times 10^2 = 202$.

Multicomponent fractions. Apart from the simple one-setting operations described, and those involved in one-setting uses of the L-, S- and T-scales, the commonest use of the slide rule is in solution of multiple-component fractions of the form $x = abcd \ldots /ghjkm \ldots$. There are several procedures for this solution; perhaps the simplest is as shown in the following:

Example. Compute $x = \dfrac{7.16 \times 2{,}340 \times 0.0017 \times 42.8}{9{,}276 \times 83.14 \times 0.63 \times 62.5} = 0.0000401$

To determine the sequence of numbers in the answer, set runner at 716 on D, bring 928 on C under hairline, move runner to 234 on C and bring 831 on C under hairline. The next step is to move runner to either 17 or 428 on C, but both of these are out of reach. The slide can be shifted so as to bring 1 at the left end of the C-scale to the present position of 10 (1 at right-hand end of C-scale) on the D-scale, which is 217; this brings the slide into a position where the next multiplier (17 or 428) is in reach, without changing the numerical relationships previously existing on the rule. Such procedure, however, fails to utilise the facilities of the rule. Rather set the runner at 17 on the CF-scale and then set 63 on the CF-scale under the hairline. (The reading 586 on the D-scale under 10 on the C-scale is now the same as though the slide had been shifted, as above described, the runner set to 17 on the C-scale and the slide moved to bring 63 on the C-scale thereunder.) Set runner to 428 on C and bring 625 on C under hairline. Read 401 on D under 10 on C.

Decimal point is best found by pointing off all numbers in the computation as products of numbers between 1 and 10, appending the proper powers of 10 to the fraction as multiplier, estimating the position of the decimal place by mental approximation of the resulting fraction without the powers of 10, and then shifting it to correspond to multiplication by the product of the powers of 10. Thus:

$$x = \frac{7.16 \times 2.34 \times 10^3 \times 1.7 \times 10^{-3} \times 4.28 \times 10^1}{9.276 \times 10^3 \times 8.314 \times 10^1 \times 6.3 \times 10^{-1} \times 6.25 \times 10^1}$$

$$= \text{approx.} \frac{\overset{1}{\cancel{7}} \times \cancel{2} \times \cancel{2} \times \cancel{4} \times 10}{\underset{2}{\cancel{8}} \times \underset{2}{\cancel{8}} \times \cancel{8} \times 6 \times 10^4} = \text{approx.} \frac{1}{24 \cdot 10^3}$$

$$= \text{approx.} \frac{100 \cdot 10^{-2}}{24 \cdot 10^3} = \text{approx. } 4 \times 10^{-5} = \text{approx. } 0.00004.$$

Multiplication by a constant multiplier. Set the runner to the multiplier on D. Bring to the runner that end of the C-scale to which the runner is nearest on the D-scale. Set the runner to all desired multiplicands in order on the C-scale and read thereunder the corresponding products on the D-scale. If the desired multiplicand is not to be reached on the C-scale, reach it on CF and read product on DF.

One dividend with a plurality of divisors. Set the end of the CI-scale to the dividend on D as in the preceding paragraph. Set runner to the divisors on CI and read quotients on D.

To divide a plurality of numbers by a given divisor. Set the runner to the divisor on D. Bring values of dividends on C under the hairline and read quotients on C over 1 or 10 on D.

Errors. Readings and settings on the 10-in. logarithmic scales are accurate to three figures in the range from 1 to 4, and can be estimated to four, but the fourth is liable to an error of 1 or 2 units; from 4 to 10, accuracy in reading and setting is one place less. Since most calculations involve both ends of the scales, the third significant figure must always be considered in doubt. Precision on the A-scale is not better than two significant figures, except perhaps in the range from 1 to 2; on the K-scale, it is probably never better than two significant figures.

ALGEBRA

Definitions. Letters denote numbers; the same letter denotes the same number throughout any given computation. ABSOLUTE VALUE of a number is its value regardless of sign. A MONOMIAL or TERM is the indicated product of two or more numbers; *e.g.*, ab. A FACTOR is a number or group of numbers in a product. A COEFFICIENT is a factor of a product; it may consist of one or more numbers itself, and the other factor may comprise one or more numbers. Similar terms are those which are alike except as to coefficients; *e.g.*, $3a^2b$, ma^2b, $-7a^2b$. A polynomial is an expression comprising the algebraic sum of two or more dissimilar monomials; *e.g.*, $6x + 3y - 7z$. The product of a number by itself is a POWER of the number; an EXPONENT is a small number written superior to and following a number; it indicates the power of the number, *e.g.*, $a \times a \times a = a^3$. Degree of a poly-

nomial in any letter is the exponent of the highest power of that letter. DEGREE of a term in two or more letters is the sum of the exponents of all of the letters.

2. FUNDAMENTAL OPERATIONS

Addition. (*a*) The sum of two or more numbers of the same sign is the sum of their absolute values, preceded by their common sign.

(*b*) The sum of a positive and a negative number is the difference of their absolute values preceded by the sign of the one of greater absolute value.

(*c*) The sum of several similar terms is the product of the common term and the algebraic sum of the coefficients. $a^2x - 3a^2x + 7a^2x = (1 - 3 + 7)a^2x = 5a^2x$.

(*d*) The sum of two or more polynomials is the algebraic sum of all of the terms. It is usual to combine all similar terms in such a sum by method (*c*).

Subtraction. Change the sign of the subtrahend and add.

Parentheses. A parenthesis preceded by a plus sign may be removed without change in signs of the terms enclosed by that parenthesis. A parenthesis preceded by a minus sign may be removed provided the sign of each term enclosed by that parenthesis is changed. First rewrite the given expression removing the innermost parenthesis, and repeat until all parentheses are removed.

Example. $(5x - 6y) - [-4x + (4z - y) - 2z] = (5x - 6y) - [-4x + 4z - y - 2z] = 5x - 6y + 4x - 4z + y + 2z = 9x - 5y - 2z$.

One or more terms may be placed within a parenthesis preceded by a plus sign without changing the sign of any terms; or preceded by a minus sign provided the sign of each term enclosed is changed.

Example. $a + 2b - c = a + (2b - c) = a - (c - 2b)$.

Multiplication. (*a*) Exponent of the product of powers of a number is the algebraic sum of the powers of the factors, *e.g.*, $a^m \times a^n = a^{m+n}$.

(*b*) PRODUCT OF MONOMIALS is the product of the coefficients $\times$ the product of the numbers. The sign of the product is positive if the signs of all factors are positive; it is positive if the number of factors with negative signs is even; otherwise it is negative.

Example 1. Compute $z = (3ax)(-2a^2x)(-7ax^3)$. Sign is + since 2 factors are (−). Product of coefficients $= 3 \times 2 \times 7 = 42$. Exponent of a's $= 1 + 2 + 1 = 4$; exponent of x's $= 1 + 1 + 3 = 5$. Hence $z = 42a^4x^5$.

Example 2. Compute $z = (-5a)(4ax)(-bc)(-3bx)$. Sign is (−). Product of numerical coefficients = 60. Product of letter numbers $= a^2b^2cx^2$. Hence $z = -60a^2b^2cx^2$.

(*c*) PRODUCT OF A POLYNOMIAL AND A MONOMIAL is the algebraic sum of the products of the monomial with the terms of the polynomial taken one at a time, *i.e.*, $(-2xy)(5x^2 - 2x - 4y) = -10x^3y + 4x^2y + 8xy^2$.

(*d*) PRODUCT OF TWO POLYNOMIALS. Arrange both multiplicand and multiplier in descending order of one of its letters; multiply each term of the multiplicand by the terms of the multiplier taken separately in order from left to right; add the partial products.

Example. Multiply $x^2 - xy + y^2$ by $x + y$.

$$\begin{array}{r} x^2 - xy + y^2 \\ x + y \\ \hline x^3 - x^2y + xy^2 \\ \quad + x^2y - xy^2 + y^3 \\ \hline x^3 \qquad\qquad + y^3 \end{array}$$

Division. (*a*) Exponent of the quotient of powers of a number is the algebraic difference between the exponent of the numerator and that of the denominator, *i.e.*, $a^m/a^n = a^{m-n}$.

(*b*) QUOTIENT OF MONOMIALS is the product of the quotients of the numerical coefficients and the quotient of the numbers. The sign of the quotient is negative if the signs of numerator and denominator are different; otherwise it is positive.

Example. Compute $w = -36a^4x^5b^8n/9a^3x^5b^7z^2$. Sign is (−). Common letters are a, x, b; their exponents are a^{4-3}, x^{1-1}, b^{8-7}. The letters not common are repeated in the quotient in their original positions and powers. Hence $w = -4abn/z^2$.

(*c*) QUOTIENT OF A POLYNOMIAL BY A MONOMIAL is the algebraic sum of the quotients of the separate terms of the polynomial with the monomial.

Example. $(15a^2b^2 + 9a^4b^3 - 30a^6b^4)/(-3a^2b^2) = -5 - 3a^2b + 10a^4b^2$.

(*d*) QUOTIENT OF POLYNOMIALS. Arrange dividend and divisor in order of descending powers of one letter. Divide the first term of the dividend by the first term of the divisor and write the result as the first term of the quotient. Multiply the entire divisor by the first term of the quotient, write the result under the dividend, and subtract. Treat the remainder as a new dividend, and proceed as before, obtaining second term of divisor. Continue until the remainder is zero, or of lower degree than the divisor in the letter of arrangement.

Example. Divide $16x + 12x^3 - 15 - 22x^2$ by $2x - 3$.

$$\begin{array}{r|l} 12x^3 - 22x^2 + 16x - 15 & 2x - 3 \quad \text{Divisor} \\ \underline{12x^3 - 18x^2} & 6x^2 - 2x + 5 \quad \text{Quotient} \\ \quad - 4x^2 + 16x - 15 & \\ \quad \underline{- 4x^2 + 6x} & \\ \quad\quad 10x - 15 & \\ \quad\quad \underline{10x - 15} & \end{array}$$

Factoring is resolution of an algebraic expression into monomials, polynomials, or both, such that their product is the original expression. Procedure for removal of monomial factors is to determine by inspection the highest common factor of all terms and divide out at once. For polynomial factors the procedure is simple trial and error. Acquaintance with the following common forms is helpful.

$$(a + b)(x + y) = ax + ay + bx + by$$
$$(a + b)(a - b) = a^2 - b^2$$
$$(a + b)^2 = a^2 + 2ab + b^2$$
$$(a - b)^2 = a^2 - 2ab + b^2$$
$$(x + a)(x + b) = x^2 + (a + b)x + ab$$
$$(ax + b)(cx + d) = acx^2 + (ad + bc)x + bd$$
$$(a + b)(a^2 - ab + b^2) = a^3 + b^3$$
$$(a - b)(a^2 + ab + b^2) = a^3 - b^3$$

FRACTIONS

Important formulas.

$$\frac{a}{b} = \frac{na}{nb} = \frac{a \div n}{b \div n}; \quad + \frac{a}{b} = - \frac{-a}{b} = - \frac{a}{-b}; \quad \frac{a}{c} + \frac{b}{c} = \frac{a + b}{c}.$$

Rules. The value of a fraction is unchanged by multiplying numerator and denominator by same number, or by changing the sign of the fraction simultaneously with the sign of either numerator or denominator. Sum of fractions with a common denominator equals a fraction with the same denominator and with a numerator equal to the sum of the given numerators. A fraction is in its LOWEST TERMS when no factor except 1 is common to both numerator and denominator.

Addition and subtraction. Reduce each fraction to its lowest terms. Find least common denominator (L.C.D.). Reduce all fractions to a common denominator. Write resulting numerators as an algebraic sum over the common denominator. Combine numerator. Resolve resulting fraction to lowest terms.

Least common denominator = least common multiple (L.C.M.) of all denominators = that expression having the least number of factors which is divisible without remainder by each denominator. To obtain, resolve each denominator separately into its prime factors; the L.C.D. is the product of all different prime factors, each taken to the highest power at which it occurs in any denominator.

Example 1. Compute $s = \frac{4x^2 - 5}{3x^2} - \frac{2 - 3x}{2x} + \frac{3x - 7}{5x^3}$. Factors in denominators are $3 \cdot x \cdot x$; $2 \cdot x$; $5 \cdot x \cdot x \cdot x$. L.C.D. $= 3 \cdot 2 \cdot 5 \cdot x \cdot x \cdot x = 30x^3$. Multiply numerator and denominator (D) of each fraction separately by L.C.D./D, and set down with the original signs. Then

$$s = \frac{(4x^2 - 5)10x}{3x^2 \cdot 10x} - \frac{(2 - 3x)15x^2}{2x \cdot 15x^2} + \frac{(3x - 7)6}{5x^3 \cdot 6} = \frac{40x^3 - 50x - 30x^2 + 45x^3 + 18x - 42}{30x^3}$$
$$= \frac{85x^3 - 30x^2 - 32x - 42}{30x^3}.$$

Example 2. Compute $s = \frac{2}{x^2 - 7x} - \frac{3}{x} + \frac{3}{x - 7}$. L.C.D. $= x(x - 7)$ Hence $s = \frac{2}{x(x - 7)} - \frac{3(x - 7)}{x(x - 7)} + \frac{3x}{x(x - 7)} = \frac{2 - 3(x - 7) + 3x}{x(x - 7)} = \frac{23}{x^2 - 7x}$.

Multiplication formula is $\frac{a}{b} \times \frac{c}{d} = \frac{ac}{bd}$. Numerators and denominators must be resolved into prime factors and the common factors in the products of numerators and of denominators canceled.

Division. Invert divisor, and proceed as in multiplication.

3. EQUATIONS

Definitions. An equation is a statement of equality between number symbols. An UNKNOWN is a symbol in an equation, the value of which is not known; it is found, if possible, by SOLVING THE EQUATION; when so solved, the value of the unknown, inserted in the original equation, makes the two sides demonstrably equal. LINEAR EQUATION (equation of first degree) is one in which the unknown, after clearing, is present only in the first degree. A QUADRATIC EQUATION (equation of second degree) is one which, after clearing, involves the square of the unknown but no higher power. LITERAL EQUATION is one in which knowns are expressed by letters as well as numerals.

General rules of manipulation. (1) The same quantity may be added to or subtracted from both sides of an equation without affecting the equality.

(2) Both sides of an equation may be multiplied or divided by the same quantity without affecting the equality.

(3) A term may be transposed from one side of an equation to the other, with simultaneous change of sign, without changing the equality.

(4) An equation containing fractions may be cleared by multiplying through (*i.e.*, multiplying both sides of the equation) by the L.C.M. of all of the denominators.

Rules for Solution of Equations

Linear equations of first degree. Transpose all terms containing unknown to left-hand side and all others to right-hand side. Combine left-hand terms into the form Ax, in which A combines all of the coefficients of x. Divide through by A.

Example. Solve: $7a + 4ax + \frac{3x}{b} = 2c - 4x - 8a + 2$.

Transpose: $4ax + \frac{3x}{b} + 4x = 2c - 8a + 2 - 7a$

Reduce: $x\left(4a + \frac{3}{b} + 4\right) = 2c - 15a + 2$

Divide through by coefficient of x: $x = (2c - 15a + 2)/\left(4a + \frac{3}{b} + 4\right)$.

Simultaneous linear equations. Two unknowns may be solved by (*a*) ADDITION and SUBTRACTION, or (*b*) SUBSTITUTION (see also Art. 4). Principle used is to ELIMINATE one unknown.

There is no solution when the equations are INCOMPATIBLE, as $x + 2y = 4$, and $x + 2y = 8$; there is an indeterminate number of solutions when the equations are DEPENDENT, as $x + 2y = 4$, and $2x + 4y = 8$, the second arising from the first by using the multiplier 2.

Example. Solve: (1) $5x - 3y = -1$, (2) $x + 2y = 5$.

(a) By addition and subtraction: Multiply (2) by 5:

Subtract: (1) $5x - 3y = -1$
(3) $5x + 10y = 25$
$-13y = -26$. $\therefore y = 2$.

Substitute in (2): $x + 4 = 5$. $\therefore x = 1$.

(b) By substitution: Solve (2) for x, giving $x = 5 - 2y$. Substitute in (1): $5(5 - 2y) - 3y = 1$. $\therefore -13y = -26$. $y = 2$.

Any number of unknowns in an equal number of **linear equations** may be solved in a similar manner by eliminating one variable from the system, thus reducing number of equations and number of variables by one, then another variable from the new system, etc.

Quadratic equations (SECOND DEGREE). Typical form is $ax^2 + bx + c = 0$. The equation has two solutions or ROOTS, x_1 and x_2.

Solution by formula.

$x_1 = (-b + \sqrt{b^2 - 4ac})/2a$, $\quad x_2 = (-b - \sqrt{b^2 - 4ac})/2a$.

Sum of roots, $x_1 + x_2 = -b/a$.

Product of roots, $x_1x_2 = c/a$.

Solution of a quadratic equation may lead to roots which are IMAGINARY NUMBERS, involving the square root of a negative number, *e.g.*, $3 + \sqrt{-11}$. Numbers not imaginary are called REAL NUMBERS. The equation has EQUAL ROOTS when $b^2 - 4ac = 0$; IMAGINARY ROOTS when $b^2 - 4ac < 0$. (See p. 11.)

Solution by factoring. Many quadratic equations can be solved immediately by factoring to linear factors. Transpose all terms to the first member. Factor this, set each factor containing the unknown equal to zero, and solve the resulting equations.

A formula sometimes useful in factoring is

$$ax^2 + bx + c = a\left(x + \frac{b - \sqrt{b^2 - 4ac}}{2a}\right)\left(x + \frac{b + \sqrt{b^2 - 4ac}}{2a}\right).$$

Solution by completing the square. Transpose terms containing x to first member and other terms to second member. Divide both members by the coefficient of x^2. Add to both members the square of half the coefficient of x, thereby making the first member a perfect square. Rewrite the equation, expressing the first member as a square, and reduce the second member to its simplest form. Extract the square root of both members, writing the sign $\pm$ (plus and minus) before the square root of the second member, thus obtaining two linear equations.

Example. Solve $2x^2 - 9x + 4 = 0$. Successive steps give the equations, $2x^2 - 9x = -4$; $x^2 - 9/2\,x = -2$; $x^2 - 9/2\,x + (9/4)^2 = -2 + (9/4)^2$; $(x - 9/4)^2 = 49/16$; $\therefore x - 9/4 = \pm 7/4$. Hence, $x = 9/4 + 7/4 = 4$, and $x = 9/4 - 7/4 = 1/2$.

System involving a linear and a quadratic equation, two unknowns. Solve the linear equation for one unknown in terms of the other, substitute this value in the quadratic equation, and solve the resulting quadratic equation in one unknown. Substitute each root of this equation in the linear equation to find the corresponding value of the other unknown.

Graphical solution comprises plotting the equation or equations on paper suitably ruled and determining the points thereon that satisfy the specified conditions.

Plotting. AXES at right angles (Fig. 2) are $X'OX$, (X-AXIS) and $Y'OY$ (Y-AXIS). Construct a NUMBER SCALE on each line (equal divisions, each of equal numerical value), point O being marked zero on both. Distances parallel to X-axis are ABSCISSAE; they are positive when to the right of Y-axis, negative to the left. Distances parallel to Y-axis are ORDINATES, positive above the X-axis, negative below. The perpendicular distances from any point to the axes are the CO-ORDINATES of the point; their lengths, written in parenthesis, *e.g.*, $(3, -4)$, abscissa first, define the point. Axes divide the plane into four QUADRANTS. Signs of co-ordinates for points in different quadrants are indicated in Fig. 2. Point O, co-ordinates $(0, 0)$, is the ORIGIN.

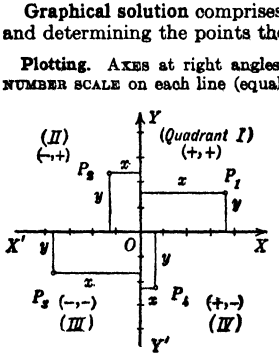

FIG. 2. Rectangular co-ordinates.

Graph of an equation in two unknowns. An indefinite number of corresponding pairs of values of x and y can be found to satisfy an equation; the line joining them is the GRAPH OF THE EQUATION. The graph of a linear equation is a straight line; that of all other equations is curved. To plot an equation in one unknown, *e.g.*, x, throw all terms onto one side and set them equal to another unknown, *e.g.*, y.

Simultaneous equations in two unknowns. The real-number solutions are the co-ordinates of the intersections of the two graphs.

Quadratic equation. (*a*) Plot y = quadratic. Real roots are abscissae of points at which the graph meets the X-axis. (Intersection with $y = 0$.) Graph of $ax^2 + bx + c = 0$ will cross, touch, or not meet the X-axis according as the roots are respectively real and unequal, equal, or imaginary. (*b*) Write the equation in the form $x^2 = ax + b$. Plot $y = x^2$, and $y = ax + b$. Abscissae of points of intersection are the required roots.

Equations of degree $n > 2$ in one unknown. (*a*) Transpose all terms to one side, set $= y$, and plot. The abscissa of each point of intersection with the X-axis is a real root (intersection with $y = 0$). (*b*) Transpose such terms to second member as may be desirable, plot y = first member, and y = second member. Abscissae of points of intersection of graphs are real roots.

Analytic solutions of higher-degree (>2) equations are numerous (5) and, in general, laborious. Several of the more useful follow.

Typical form of equation is

$$a_0x^n + a_1x^{n-1} + a_2x^{n-2} + \cdots a_{n-1}x + a_n = 0. \qquad (A)$$

Integral roots are found most readily by factoring, using the remainder theorem and the method of synthetic division. Every integral root of an equation with integral coefficients is a factor of the last term. By this theorem all possible integral roots are found in advance by factoring the last term.

Remainder theorem. When a polynomial in x is divided by $x - (r)$, the remainder obtained is the value of the polynomial resulting when r is substituted for x.

Example. When $3x^3 + 4x^2 - 6x + 5$ is actually divided by $x - 2$, the remainder is 33. For $x = 2$, $3 \cdot 2^3 + 4 \cdot 2^2 - 6 \cdot 2 + 5 = 24 + 16 - 12 + 5 = 33$.

Synthetic division. To divide a polynomial in x by a linear factor of the form $x - (r)$, write down the successive coefficients a_0, a_1, a_2, etc., of descending powers of the polynomial in a horizontal line from left to right. Bring down the first coefficient a_0. Multiply a_0 by r and add the product to the second coefficient a_1. Multiply the sum $(a_0r + a_1)$ so obtained by r, and add to the third coefficient a_2. Continuing this process, the last sum will be the remainder, and the preceding sums from left to right the successive coefficients of descending powers of the quotient.

Example. The number $2(=r)$ is bracketed to the right of the line of coefficients. The first coefficient 3 is written down below the original ones. Multiply it by 2 and add the product $(3 \times 2 = 6)$ to the second coefficient 4. Multiply sum $(4 + 6 = 10)$ by 2, and add the product $(10 \times 2 = 20)$ to the third coefficient -6. Continuing, the last sum 33 is the remainder, and the preceding sums, 3, 10, and 14, are successive coefficients of the quotient $3x^2 + 10x + 14$.

Form. Divide $3x^3 + 4x^2 - 6x + 5$ by $x - 2$.

Solution

$$\begin{array}{rrrr|l} 3 & + 4 & - 6 & + 5 & 2 \\ & + 6 & + 20 & + 28 & \\ \hline 3 & + 10 & + 14 & (+ 33 = \textit{Remainder}) & \end{array}$$

Coefficients of quotient, $3x^2 + 10x + 14$.

If powers of x are missing in the given polynomial, their places must be supplied to zero coefficients. Thus to divide $x^3 + 8$ by $x + 2$, write $x^3 + 8 = x^3 + 0 \cdot x^2 + 0 \cdot x + 8$, and $x + 2 = x - (-2)$. Hence the work is

$$\begin{array}{rrrr|l} 1 & 0 & 0 & + 8 & -2 \\ & - 2 & + 4 & - 8 & \\ \hline 1 & - 2 & + 4 & 0 & \end{array}$$

$\therefore\ x^3 + 8 = (x^2 - 2x + 4)(x + 2)$.

Synthetic division should be used to calculate the ordinates of a graph. Thus the graph of $3x^3 + 4x^2 - 6x + 5 = 0$ passes through (2, 33) the value 33 being found by synthetic division.

Number of linear factors and roots. An equation of degree n has precisely n linear factors of the form $x - r$, and, therefore, has n roots. A linear factor may be repeated. If $r_1, r_2, \ldots, r_n$ are roots of Eq. A (p. 10), it may be written

$$a_0(x - r_1)(x - r_2) \ldots (x - r_n) = 0. \qquad \textbf{(B)}$$

Relations between coefficients and roots. In an equation in which the coefficient of the highest power is unity, the coefficient of the second term with sign changed equals the sum of all the roots; the coefficient of the third term equals the sum of all products formed from two of the roots at a time; the coefficient of the fourth term with sign changed equals the sum of all the products formed from three of the roots at a time; etc. When the degree is even, the last coefficient equals the product of all roots; when odd, the last coefficient, with sign changed, equals the product of all roots.

Imaginary roots. If the imaginary number $a + b\sqrt{-1}$ (a and b being real numbers) is a root of an equation with real coefficients, $a - b\sqrt{-1}$ is a root also. Imaginary roots occur only in conjugate pairs in equations with real coefficients. The corresponding factors are $x - (a + b\sqrt{-1})$, and $x - (a - b\sqrt{-1})$. Their product is $x^2 - 2ax + a^2 + b^2$, and this product is a REAL QUADRATIC FACTOR of the equation.

Solution of numerical equation of higher degree by trial. Clear the equation of fractional coefficients. If one integral root can be found, a linear factor is known, and the quotient is quickly found by synthetic division. The remaining roots are roots of the equation obtained by setting the quotient equal to zero; an equation of degree less by one than original. Factor last term. Since $+1$ and -1 are always factors, each should be tried for a root (by inspection). If either is a root, remove corresponding factor $(x - 1)$ or $(x + 1)$. Other factors of last term should be tried by synthetic division. When enough factors have been removed to reduce the remaining quotient to a quadratic, this may be solved as usual.

Example. Solve $x^4 - x^3 - 9x^2 + 11x + 6 = 0$ by trial. Try $+1$ and -1. Substituting these values in turn, neither is a root. Other factors of 6 are ± 2, ± 3, ± 6. Trying $+2$, it turns out to be a root.

$$\begin{array}{rrrrrr|l} 1 & - 1 & - 9 & + 11 & + 6 & & 2 \\ & + 2 & + 2 & - 14 & - 6 & & \\ \hline 1 & + 1 & - 7 & - 3 & 0 & & \end{array}$$

The equation now may be written

$$(x - 2)(x^3 + x^2 - 7x - 3) = 0.$$

The second factor shows that only $+3$ or -3 should be tried. Try -3. It is a root. Equation now is $(x - 2)(x + 3)(x^2 - 2x - 1) = 0$. Solving for roots of quadratic factor, they are found to be $1 \pm \sqrt{2}$. Hence the roots of the given equation are $2, -3, 1 + \sqrt{2}, 1 - \sqrt{2}$.

$$\begin{array}{rrrrr|l} 1 & + 1 & - 7 & - 3 & & -3 \\ & - 3 & + 6 & + 3 & & \\ \hline 1 & - 2 & - 1 & 0 & & \end{array}$$

Fractional roots. Equations of degree higher than two with no integral roots cannot be solved by the method just explained. Such equations may, however, have fractional roots. When the coefficient of the highest power is not 1, divide by it. The remaining coefficients may then be reduced to integers as follows. After dividing the equation by the coefficient of the highest power, write in any missing powers of x with zero coefficients. Insert factors m, m^2, m^3 . . . in second, third, fourth, . . . terms. Choose for m the smallest integer which will reduce all coefficients to integers. Roots of this transformed equation will be m-times the roots of the original equation. This transformation is called MULTIPLYING THE ROOTS BY m. Find integral roots of transformed equation by trial and divide each by the value of m. Quotients are roots of original equation.

Example. Solve $36x^4 - 55x^2 - 35x - 6 = 0$. Divide by 36, and write

$x^4 + 0 \cdot x^3 - \frac{55x}{36} - \frac{35x}{36} - \frac{1}{6} = 0$. Putting in powers of m, $x^4 + 0 \cdot mx^3 - \frac{55}{36}m^2x^2 - \frac{35}{36}m^3x - \frac{1}{6}m^4 = 0$. Choose $m = 6$, giving $x^4 + 0 \cdot x^3 - 55x^2 - 210x - 216 = 0$. Roots of this equation are -2, -3, -4, 9.

Hence roots of original equation are $-1/3$, $-1/2$, $-2/3$, $3/2$. *Ans.*

All possible fractional roots may be found in this way because of the theorem: An equation in which the coefficient of the highest power is unity, and other coefficients integral, cannot have a fractional root.

Changing signs of roots. If the signs of alternate terms ($m = -1$) are changed, the transformed and original equations have roots differing only in sign.

Incommensurable roots. Real roots that are neither integral nor fractional may be computed to any number of decimal places by various methods. The existence of real roots is indicated by the LOCATION THEOREM: Substitute two real numbers a and b for x in the first member of the equation; if the resulting numerical values differ in sign, an odd number of roots will lie between $x = a$ and $x = b$. The graph of the equation must join points on opposite sides of the x-axis, hence must cross this axis an odd number of times. When a and b are successive integers, only one root will, as a rule, lie between them.

Example. In equation $x^3 - 6x^2 + 3x + 5 = 0$, putting $y =$ the first member, corresponding values of x and y are, by synthetic division:

x:	-1	0	1	2	5	6
y:	-5	5	3	-5	-5	23

One root lies between -1 and 0, one between 1 and 2, and one between 5 and 6. These roots are incommensurable, since there are no fractional nor integral roots.

Horner's method. Assume a positive root located between $x = h$ and $x = h + 1$, where h is an integer not zero. Substitute $x = y + h$ in the equation. Roots of this new equation in y will be roots of the original equation diminished by h. (Since $y = x - h$.) Hence the equation in y must have a root between 0 and 1. The first significant figure of this root (in first place of decimals) will be the second figure of the root of the original equation. If this root of the equation in y is located between $y = k$ and $y = k + 0.1$ (k being an integer in the tenth's place), put $y = z + k$. The equation in z will have a root between 0 and 0.1, and its first significant figure in the hundredth's place will be the third figure of the root sought of the equation in x. This outline of HORNER'S METHOD FOR POSITIVE ROOTS indicates that a suite of equations (A), (B), (C), . . . is obtained by transformations which diminish the roots by a given number.

Example. Diminish the roots of $x^3 - 6x^2 + 3x + 5 = 0$ by 1.

$$\begin{array}{r|l} 1 - 6 + 3 + 5 & 1 \\ \quad + 1 - 5 - 2 & \\ \hline 1 - 5 - 2(+ 3) & = \text{1st remainder} \\ \quad + 1 - 4 & \\ \hline 1 - 4(- 6) & = \text{2nd remainder} \\ \quad + 1 & \\ \hline 1(- 3) & = \text{3rd remainder} \end{array}$$

The transformed equation is $x^3 - 3x^2 - 6x + 3 = 0$. (The example shows compact arrangement of the work by synthetic division.)

To diminish the roots of an equation by any given number h. Divide the given equation by $x - h$. The remainder is the last coefficient in the transformed equation. Divide the quotient obtained by $x - h$. The remainder is the coefficient of the next to last term in the transformed equation. Continue this process, the last remainder being the coefficient of the second term in the new equation. The coefficients of the highest powers are the same in the original and transformed equations.

Negative roots. Write down an equation with roots differing only in sign from those of the given equation (above), and calculate the positive roots of this equation. In locating roots greater than 10 and less than 100, it suffices to use the intervals 10, 20, 30, etc. To avoid diminishing by a number greater than 10, multiply roots by 0.1 (above).

In the transformed equation, the root desired will lie between successive integers. For a root greater than 100, multiply roots by 0.01. In reduction by a figure in the tenth's place, decimals can be avoided by first multiplying roots by 10; similarly for a figure in any succeeding place. Diminishing by a figure in unit's place establishes the sign of the first remainder (constant term), which must remain unchanged in the succeeding equations. The correct figure in a decimal place (not tenth's place) may usually be found by rejecting all but the last two terms of the equation, the assumption being that the value of the terms rejected will not affect the result. Caution must be observed in doing this, however. At a certain stage more than one figure can be found by dividing the last by the preceding coefficient (with sign changed).

Example. Calculate the root of $x^3 - 6x^2 + 3x + 5 = 0$ lying between 1 and 2. *Solution.* Diminish the roots by 1. New equation is $x^3 - 3x^2 - 6x + 3 = 0$. This equation has a root between 0.4 and 0.5. Diminish the roots by 0.4.

$$\begin{array}{r|l} 1 - 3.0 - 6.00 + 3.000 & 0.4 \\ \quad + 0.4 - 1.04 - 2.816 & \\ \hline 1 - 2.6 - 7.04(+\ 0.184) & \\ \quad + 0.4 - 0.88 & \\ \hline 1 - 2.2(-\ 7.92) & \\ \quad + 0.4 & \\ \hline 1(-\ 1.8) & \end{array}$$

The transformed equation is $x^3 - 1.8x^2 - 7.92x + 0.184 = 0$. It has a root between 0 and 0.1. Neglecting the two first terms, $-7.92x + 0.184 = 0$, $x = 0.02$. Diminish by 0.02. Transformed equation is $x^3 - 1.74x^2 - 7.9908x + 0.024888 = 0$. The root of this equation between 0 and 0.01 is $x = \dfrac{0.024888}{7.9908} = 0.003$. Hence root is 1.423 to three places.

The last division may be carried farther. $x = 0.024888 \div 7.9908 = 0.00311$. Value of rejected terms $(x^3 - 1.74x^2)$ for x between 0.003 and 0.004 lies between -0.000015 and -0.000028, therefore three figures may be found by division. The root is 1.42311 to 5 places.

Number of real roots. When two consecutive coefficients in an equation have like signs a PERMANENCE OF SIGN is said to occur, if unlike signs, a VARIATION OF SIGN occurs. DESCARTES' RULE OF SIGNS states that the number of positive roots cannot exceed the number of variations of sign, nor can the number of negative roots exceed the number of permanences of sign. Existence of imaginary roots may often be established by this rule.

Example. In $x^3 + 5x + 7 = 0$, no variation of sign occurs; therefore there is no positive root. Writing in x^2 with coefficient -0, signs are $+-++$, only one permanence, hence not more than one negative root. Equation has one real root which is negative and a pair of conjugate imaginary roots.

Sturm's theorem gives a method of determining the number of real roots between two numbers $x = a$, $x = b$. (5)

Solution of cubic equation, $x^3 + 3Hx + G = 0$

Graphical solution. Plot $y = x^3$, and $y = -3Hx - G$. Abscissae of points of intersection are roots.

Formula. Put $J = G^2 + 4H^3$.

Case I. J positive. One root only is real, $x = \sqrt[3]{-1/2\,G + \sqrt{J}} + \sqrt[3]{-1/2\,G - \sqrt{J}}$.

Case II. $J = 0$. All roots are real and two equal $x_1 = 2\sqrt[3]{-1/2\,G} = x_2$.

Case III. J negative. Roots all real and distinct. Determine the angle t between 0° and 180° for which $\cos t = -G/2H\sqrt{-H}$. Roots are $x_1 = 2\sqrt{-H}\cos 1/3t$, $x_2 = 2\sqrt{-H}\cos(1/3t + 120°)$, $x_3 = 2\sqrt{-H}\cos(1/3t + 240°)$.

To eliminate x^2 from $ax^3 + bx^2 + cx + d = 0$, put $z = ax + 1/3\,b$, or $x = (3z - b)/3a$.

4. DETERMINANTS

Formulas for solving linear systems can be written down in compact form by use of determinants, which are arrangements of numbers in the form of squares. (5)

Second order. $\begin{vmatrix} a_1 & b_1 \\ a_2 & b_2 \end{vmatrix} = a_1b_2 - a_2b_1.$

Third order.

$$\begin{vmatrix} a_1 & b_1 & c_1 \\ a_2 & b_2 & c_2 \\ a_3 & b_3 & c_3 \end{vmatrix} = a_1 \begin{vmatrix} b_2 & c_2 \\ b_3 & c_3 \end{vmatrix} - a_2 \begin{vmatrix} b_1 & c_1 \\ b_3 & c_3 \end{vmatrix} + a_3 \begin{vmatrix} b_1 & c_1 \\ b_2 & c_2 \end{vmatrix}.$$

$$= a_1b_2c_3 - a_1b_3c_2 - a_2b_1c_3 + a_2b_3c_1 + a_3b_1c_2 - a_3b_2c_1.$$

Fourth order.
$$\begin{vmatrix} a_1 b_1 c_1 d_1 \\ a_2 b_2 c_2 d_2 \\ a_3 b_3 c_3 d_3 \\ a_4 b_4 c_4 d_4 \end{vmatrix} = a_1 \begin{vmatrix} b_2 c_2 d_2 \\ b_3 c_3 d_3 \\ b_4 c_4 d_4 \end{vmatrix} - a_2 \begin{vmatrix} b_1 c_1 d_1 \\ b_3 c_3 d_3 \\ b_4 c_4 d_4 \end{vmatrix} + a_3 \begin{vmatrix} b_1 c_1 d_1 \\ b_2 c_2 d_2 \\ b_4 c_4 d_4 \end{vmatrix} - a_4 \begin{vmatrix} b_1 c_1 d_1 \\ b_2 c_2 d_2 \\ b_3 c_3 d_3 \end{vmatrix}.$$

The numbers are called ELEMENTS. If the row and column in which an element lies are erased, the determinant remaining is called the CORRESPONDING MINOR of that element. The value of a determinant is expressed as a sum of products of successive elements of a row (or column) by corresponding minors with alternating signs, as shown above for the elements of the first column.

Solution of linear systems

Two unknowns. $a_1x + b_1y = c_1$, $a_2x + b_2y = c_2$.

$$x = \begin{vmatrix} c_1 b_1 \\ c_2 b_2 \end{vmatrix} \div \begin{vmatrix} a_1 b_1 \\ a_2 b_2 \end{vmatrix}, \quad y = \begin{vmatrix} a_1 c_1 \\ a_2 c_2 \end{vmatrix} \div \begin{vmatrix} a_1 b_1 \\ a_2 b_2 \end{vmatrix}.$$

Three unknowns. $a_1x + b_1y + c_1z = d_1$, $a_2x + b_2y + c_2z = d_2$, $a_3x + b_3y + c_3z = d_3$.

$$D = \begin{vmatrix} a_1 b_1 c_1 \\ a_2 b_2 c_2 \\ a_3 b_3 c_3 \end{vmatrix} \neq 0. \qquad x = \frac{\begin{vmatrix} d_1 b_1 c_1 \\ d_2 b_2 c_2 \\ d_3 b_3 c_3 \end{vmatrix}}{D}, \quad y = \frac{\begin{vmatrix} a_1 d_1 c_1 \\ a_2 d_2 c_2 \\ a_3 d_3 c_3 \end{vmatrix}}{D}, \quad z = \frac{\begin{vmatrix} a_1 b_1 d_1 \\ a_2 b_2 d_2 \\ a_3 b_3 d_3 \end{vmatrix}}{D}.$$

Similar formulas hold for any number of unknowns.

Properties of determinants. (1) Interchanging the corresponding elements of two columns (or rows) changes the sign of the determinant. (2) If corresponding elements of two rows (or columns) are identical, the determinant is zero. (3) Columns may be changed to rows and rows to columns. (4) If all the elements of a column are multiplied by a number m, the value of the determinant is multiplied by m. (5) The value of a determinant is unchanged, if the elements of a column are multiplied by m and added to corresponding elements of any other column.

5. EXPONENTS

Exponents. For any numbers m, n, the following formulas hold: $a^m \times a^n = a^{m+n}$; $a^m/a^n = a^{m-n}$; $(a^m)^n = a^{mn}$; $a^0 = 1$, $1/a^n = a^{-n}$; $a^m b^m = (ab)^m$; $a^{\frac{1}{r}} = \sqrt[r]{a}$; $\sqrt[r]{a} \times \sqrt[r]{b} = \sqrt[r]{ab}$ (r a positive integer).

Radicals. A radical is an indicated root of an algebraic or arithmetic expression. Operations with radicals are performed by changing to exponents. $\sqrt[r]{A} = A^{1/r}$.

Example. $\sqrt{2} \times \sqrt[3]{3} = 2^{1/2} \times 3^{1/3} = 2^{3/6} \times 3^{3/6} = (2^3)^{1/6} \times (3^2)^{1/6} = 8^{1/6} \times 9^{1/6} = (72)^{1/6} = \sqrt[6]{72}$. *Ans.*

Division by radicals may be avoided by RATIONALIZING.

Example. To compute $\dfrac{\sqrt{3} + \sqrt{2}}{\sqrt{5} - \sqrt{3}}$, multiply numerator and denominator by $\sqrt{5} + \sqrt{3}$. This rationalizes the denominator, for $(\sqrt{5} - \sqrt{3})(\sqrt{5} + \sqrt{3}) = 5 - 3 = 2$, hence the value $1/2\,(\sqrt{3} + \sqrt{2})(\sqrt{5} + \sqrt{3}) = 1/2\,(3 + \sqrt{6} + \sqrt{10} + \sqrt{15})$.

6. CHANCE

Permutation of any number of things is a group of some or all of them, arranged in a definite order (**5**). The number of permutations of m different things taken r at a time is the product of successive decreasing integers from m down to $m - r + 1$. The number of permutations of m different things taken all together is the product of all integers from 1 to m. The product $1 \cdot 2 \cdot 3 \cdot \ldots \cdot m$ is called FACTORIAL m, and written $m!$. The formula for the number of permutations of m things r at a time is $m!/(m - r)!$.

Combination of any number of things is a group of some or all of them, without reference to order in the group. The number of combinations of m different things r at a time

equals the number of permutations divided by factorial r, namely $m!/(m-r)!\,r!$. Given two groups of m and n things respectively, the number of selections (combinations) of $r+s$ things, r from first group and s from second group equals $m!\,n!/(m-r)!\,(n-s)!\,r!\,s!$.

Probability that an event will happen is the ratio of the number of favorable cases to the whole number of cases that can occur. (6)

Example. From an urn containing 5 black and 4 white balls, 3 balls are drawn at random. What is the probability that 2 will be black and 1 white?

From 9 balls 3 may be drawn in $9 \times 8 \times 7/3! = 84$ ways. (This is the number of combinations of 9 things 3 at a time.) The number of favorable cases (formula above) is $5!\,4!/3!\,3!\,2! = 40$. Hence the required probability is $40/84 = 10/21$, *i.e.*, 10 chances in 21.

If the probabilities of two events are a and b, respectively, the probability of simultaneous occurrence is ab, and of occurrence of one or the other is $a+b$.

Example. The probability of drawing a knave from a full pack of cards is 1/13. The probability of drawing a spade is 1/4. Hence the probability of drawing the knave of spades is $1/13 \cdot 1/4 = 1/52$. Probability of drawing a knave or an ace is $1/13 + 1/13 = 2/13$.

7. PROGRESSIONS

Arithmetic progression is a sequence of terms each of which differs from the preceding by the same number d (COMMON DIFFERENCE). If n = number of terms, a = first term, l = last term, s = sum of n terms, then $l = a + (n-1)d$, and $s = \frac{n}{2}(a+l)$. ARITHMETIC MEAN of two numbers is half their sum.

Geometric progression is a sequence of terms each of which is obtained from the preceding by multiplying it by a fixed number r (RATIO). If n = number of terms, a = first term, l = last term, s = sum of n terms, then $l = ar^{n-1}$, $s = (rl-a)/(r-l)$. GEOMETRIC MEAN of two numbers m, n is $\sqrt{mn}$.

8. BINOMIAL THEOREM

The binomial theorem is a formula for expanding a power of the sum of two terms.

$$(a+b)^n = a^n + na^{n-1}b + \frac{n(n-1)}{1\cdot 2}a^{n-2}b^2 + \frac{n(n-1)(n-2)}{1\cdot 2\cdot 3}a^{n-3}b^3 + \cdots$$

If n is a positive integer, the right-hand member contains $n+1$ terms and the last term is b^n. The product of the coefficient in any term and the exponent of a in that term divided by the exponent of b increased by 1 gives the coefficient of the next term. If n is not a positive integer, the sequence of terms of the second member does not terminate but leads to an INFINITE SERIES. The formula holds then only when $|b| < |a|$. (See under Series, Art. 22.)

Table 2. Binomial coefficients

r	$\binom{r}{2}$	$\binom{r}{3}$	$\binom{r}{4}$	$\binom{r}{5}$
0.1	−0.0450	0.0285	−0.0207	0.0161
0.2	−0.0800	0.0480	−0.0336	0.0255
0.3	−0.1050	0.0595	−0.0402	0.0297
0.4	−0.1200	0.0640	−0.0416	0.0300
0.5	−0.1250	0.0625	−0.0391	0.0273
0.6	−0.1200	0.0560	−0.0336	0.0228
0.7	−0.1050	0.0455	−0.0262	0.0173
0.8	−0.0800	0.0320	−0.0176	0.0113
0.9	−0.0450	0.0165	−0.0087	0.0054

Coefficients 1, n, $\frac{n(n-1)}{1\cdot 2}$, $\frac{n(n-1)(n-2)}{1\cdot 2\cdot 3}$, $\frac{n(n-1)(n-2)(n-3)}{4!}$, etc., are called BINOMIAL COEFFICIENTS. A convenient notation is $n = \binom{n}{1}$, $\frac{n(n-1)}{1\cdot 2} = \binom{n}{2}$, $\frac{n(n-1)(n-2)}{1\cdot 2\cdot 3} = \binom{n}{3}$, etc. When n = a positive integer, the rth coefficient from the beginning and the rth from the last are equal. (See Table 2.)

9. INTERPOLATION

Series of differences. From a given sequence a_1, a_2, a_3, a_4, etc., form the sequence of FIRST DIFFERENCES $a_2 - a_1$, $a_3 - a_2$, etc., obtained by subtracting each term from the preceding term. From this sequence a third series of SECOND DIFFERENCES may be formed, and so on.

Let b_1, b_2, b_3, etc., be the series of first differences;
c_1, c_2, c_3, etc., be the series of second differences;
d_1, d_2, d_3, etc., be the series of third differences.

The formula for $(n+1)$th term of original sequence is $a_{n+1} = a_1 + nb_1 + \frac{n(n-1)}{1\cdot 2} c_1 + \frac{n(n-1)(n-2)}{1\cdot 2\cdot 3} d_1 + \ldots$ Formula for sum s of n terms is,

$$s = na_1 + \frac{n(n-1)}{1\cdot 2} b_1 + \frac{n(n-1)(n-2)}{1\cdot 2\cdot 3} c_1 + \ldots$$

Application of the formula is to cases when differences of a certain order all vanish. In an arithmetic progression, for example, second-order differences are zero.

Example. Find the sum of 11 terms of the series 1, 5, 12, 24, 43, 71, etc.
Solution. $a_1 = 1, b_1 = 4, c_1 = 3, d_1 = 2, n = 11$.
$s = 11 + 220 + 495 + 660 = 1386$. *Ans.*

1	5	12	24	43	71	
	4	7	12	19	28	
		3	5	7	9	
			2	2	2	
				0	0	

Sums of powers of integers 1, 2, 3, . . . n.
Sum of first powers $= \frac{1}{2}n(n+1)$.
Sum of second powers $= \frac{1}{6}n(n+1)(2n+1)$.
Sum of third powers $= (\frac{1}{2}n(n+1))^2$.

Interpolation by differences of higher order. A numerical table usually gives values $y_1, y_2, y_3, \ldots$ of a function y corresponding to values $x_1, x_2, x_3, \ldots$ of x. Successive values of x differ by a constant difference d (form an arithmetic progression). From the values of y, form a series of differences of the first order, second order, etc., and let D_1, D_2, etc., be the first terms, respectively, of these series. To interpolate a value of y, say y', corresponding to the value $x' = x_1 + rd (d = x_2 - x_1, r < 1)$ of x between x_1 and x_2, use INTERPOLATION FORMULA,

$$y' = y_1 + rD_1 + \frac{r(r-1)}{1\cdot 2} D_2 + \frac{r(r-1)(r-2)}{1\cdot 2\cdot 3} D_3 + \ldots$$

Differences above a certain order are assumed very small.

If differences above the first order are negligible, the formula $(y' = y' + rD_1)$ becomes the usual proportion $(y' - y_1) : (x' - x_1) = (y_2 - y_1) : (x_2 - x_1)$, for INTERPOLATION BY FIRST DIFFERENCES.

In using the above formula attention should be paid to the remarks under ***Fundamental arithmetic calculations*** (Art. 1).

10. COMPLEX NUMBERS

If a and b are real numbers, $a + b\sqrt{-1}$ is a COMPLEX NUMBER. Write $i = \sqrt{-1}$, $i^2 = -1$. Number i is called IMAGINARY UNIT. When $a = 0$, the complex number is a pure imaginary, or simply imaginary, number. Complex numbers differing only in the sign of the imaginary part are said to be CONJUGATE. Point with coordinates (a, b) represents $a + bi$ graphically (Fig. 3). Real numbers are represented by points on X-axis (number scale), imaginary numbers by points on Y-axis. Formal laws of operation in algebra apply to complex numbers, remembering always that $i^2 = -1$. This representation of complex numbers is a counterpart of a number scale for real numbers.

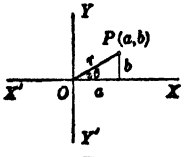

FIG. 3.

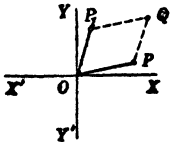

FIG. 4.

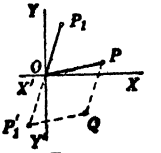

FIG. 5.

Graphs of complex numbers.

Addition. The sum of $a + bi$ and $a_1 + b_1 i$ is $(a + a_1) + (b + b_1)i$. To construct graphically point Q corresponding to the sum of numbers, represented by P and P_1, draw parallelogram $OPQP_1$ (Fig. 4). Regarding OP and OP_1 as vectors, the operation of addition is VECTOR ADDITION.

Subtraction. Difference of $a + bi$ and $a_1 + b_1 i$ is $(a - a_1) + (b - b_1)i$. To construct corresponding point Q, plot $P_1'(-a_1, -b_1)$, and draw parallelogram $OPQP_1'$ (Fig. 5).

Absolute value and amplitude of $a + bi$ are respectively the polar coordinates r and θ (p. 33) of $P(a, b)$ (Fig. 3).

$$r = +\sqrt{a^2 + b^2} = |a + bi| \qquad a = r\cos\theta \qquad b = r\sin\theta.$$

Hence $a + bi = r(\cos\theta + i\sin\theta)$.

Absolute value r is also called MODULUS, and amplitude θ ANGLE OR ARGUMENT. The amplitude given by $a = r\cos\theta$, $b = r\sin\theta$ is a unique angle less than 360°.

Multiplication of $a + bi$ and $a_1 + b_1 i$. Write in polar form $a + bi = r(\cos\theta + i\sin\theta)$, $a_1 + b_1 i = r_1(\cos\theta_1 + i\sin\theta_1)$. Then $(a + bi)(a_1 + b_1 i) = rr_1[\cos(\theta + \theta_1) + i\sin(\theta + \theta_1)]$. The absolute value of the product of two complex numbers is the product of the absolute values, and the amplitude is the sum of the amplitudes. Multiplication by i has the effect of rotating a point through 90°, by $i^2 = -1$ through 180°, by $i^3 = -i$, through 270°.

Division of two complex numbers $a + bi$ and $c + di$ is worked as follows:

$$\frac{a+bi}{c+di} = \frac{a+bi}{c+di} \times \frac{c-di}{c-di} = \frac{ac+bd+(bc-ad)i}{c^2+d^2}.$$

Absolute value of the quotient of two complex numbers is the quotient of the absolute values of numerator and denominator, and the amplitude of the quotient is the difference of the amplitudes of numerator and denominator.

Powers and roots. For a positive integer n, $(a + bi)^n = r^n(\cos\theta + i\sin\theta)^n = r^n(\cos n\theta + i\sin n\theta)$. When $r = 1$, this is known as DEMOIVRE'S THEOREM.

$$\sqrt[n]{a+bi} = \sqrt[n]{r}(\cos\theta + i\sin\theta)^{\frac{1}{n}} = \sqrt[n]{r}(\cos\theta/n + i\sin\theta/n).$$

In this formula, θ has n values differing by 360°, namely, θ_1 (amplitude of $a + bi < 360°$), $\theta_1 + 360°$, $\theta_1 + 720°$, . . ., $\theta_1 + (n-1)360°$. The nth root of a real number has n distinct values, one real, the others complex.

Cube roots of unity are found by setting $n = 3$, $r = 1$, $\theta = 0, 360°, 720°$. They are 1, $\cos 120° + i\sin 120°$, $\cos 240° + i\sin 240°$, that is, $1, -1/2 + \sqrt{-3}/2, -1/2 - \sqrt{-3}/2$. Points representing these roots are the vertices of an equilateral triangle inscribed in a circle drawn with unit radius about the origin, one vertex being (1, 0). Similarly, the vertices of a regular polygon of n sides inscribed in this circle, one vertex (1, 0), will represent the nth roots of unity.

Exponentials, trigonometric functions, and complex numbers. The relations are

$$e^{ix} = \cos x + i\sin x,$$
$$\sin x = (e^{ix} - e^{-ix})/2i;$$
$$\cos x = (e^{ix} + e^{-ix})/2.$$

From these relations, $e^{2\pi i} = 1$; $e^{\pi i} = \cos\pi + i\sin\pi = -1$; $e^{\pi i/2} = i$; $e^{\pi i/4} = +\sqrt{i} = \cos\pi/4 + i\sin\pi/4$.

Logarithm of a complex number $a + bi = re^{i\theta}$ is a complex number, $\log r + i\theta$. Since θ may be replaced by $\theta + 2n\pi$ (n any integer), $\log(a + bi) = \log r + i(\theta + 2\pi n)$. Points representing $\log(a + bi)$ lie on a line parallel to Y-axis, to the right a distance equal to $\log r$.

11. PRECISION OF MEASUREMENTS

Arithmetic mean. If a number of measurements are made to determine directly the unknown magnitude of a certain object, all measurements being made with equal skill and care, the MOST PROBABLE VALUE of the unknown is the arithmetical mean of all the measurements. That is, with n measurements $x_1, x_2, x_3 \ldots x_n$, the most probable value x_0 is $x_0 = (x_1 + x_2 + x_3 + \ldots + x_n)/n$. **(6)**

The basis for this assumption is that, on the average, errors in excess (POSITIVE ERRORS) and errors in defect (NEGATIVE ERRORS) are evenly balanced, so that the sum of the errors is zero.

Least squares. If the unknown magnitude is x, it can be readily shown by calculus (Art. 21) that the most probable value is that for which the sum of the squares of the errors, *i.e.*, $(x_1 - x)^2 + (x_2 - x)^2 + \ldots + (x_n - x)^2$ is a minimum.

Weighted measurements. If the method of making measurements shows that weights w_1, w_2, etc., should be assigned to measurements x_1, x_2, etc., then the most probable value of the unknown is the WEIGHTED MEAN, $x_0 = (w_1x_1 + w_2x_2 + \ldots + w_nx_n)/(w_1 + w_2 + \ldots + w_n)$.

Residuals are differences $x_1 - x_0, x_2 - x_0$, etc., between the observed values and the most probable value, and are denoted by v_1, v_2, etc. Evidently $v_1 + v_2 + \ldots + v_n = 0$.

Probable error of an observation is a number such that the actual error of that observation may with equal chances be greater or less than the probable error. For example, if a measurement is 30.726 with a probable error of ±0.014, the meaning is that the correct value is just as likely to lie between 30.712 and 30.740 as outside these limits. The probable error gives a measure of the precision of a measurement. Weights to be attached to different determinations of the same quantity are inversely proportional to the squares of the probable errors. Formulas for computing probable error follow. Numerical values of residuals are $|v_1|, |v_2|$, etc., number of observations is n.

Probable error (r) of single observation,

$$r = \frac{0.6745}{\sqrt{n-1}}\sqrt{v_1^2 + v_2^2 + \ldots + v_n^2}. \qquad \text{(STANDARD FORMULA)}$$

$$r = \frac{0.8453}{\sqrt{n(n-1)}}(|v_1| + |v_2| + \ldots |v_n|).$$

(PETER'S FORMULA, approximate)

Probable error (r_0) of arithmetical mean,

$$r_0 = r/\sqrt{n}; \quad r_0 = \frac{0.6745}{\sqrt{n(n-1)}}\sqrt{v_1^2 + v_2^2 + \ldots + v_n^2}.$$

(STANDARD FORMULA)

$$r_0 = \frac{0.8453}{n\sqrt{n-1}}(|v_1| + |v_2| + \ldots + |v_n|).$$

(PETER'S FORMULA, approximate)

For tables of values of coefficient of parentheses, see (6).

Example. The following are ten measurements M of the length of a base line. Below are given the values of residuals, v, and the squares of residuals.

M: 455.35, 455.35, 455.20, 455.05, 455.75, 455.40, 455.10, 455.30, 455.50, 455.30.

M_0 = arithmetic mean = 455.330.

v: 0.02, 0.02, −0.13, −0.28, 0.42, 0.07, −0.23, −0.03, 0.17, −0.03.

v^2: 0.0004, 0.0004, 0.0169, 0.0784, 0.1764, 0.0049, 0.0529, 0.0009, 0.0289, 0.0009.

Hence $v_1^2 + v_2^2 + \ldots + v_n^2 = 0.3610$. And $|v_1| + |v_2| + \ldots + |v_n| = 1.40$.

$\therefore$ by the standard formulas, $r = \frac{0.6745}{\sqrt{9}}\sqrt{0.3610} = 0.13$, $r_0 = r/\sqrt{10} = 0.042$.

By the approximate formulas, $r = \frac{0.8453}{\sqrt{90}}(1.40) = 0.12$. $r_0 = 0.039$.

For the most probable length of the base line, the result is 455.330 with probable error ±0.042 (using result given by standard formula), usually written 455.330 ± 0.042. Note also that five of the residuals are numerically less than the probable error of a single observation. In fact, in any considerable number of observations it should be the case that half of the residuals are less than the probable error

Probable error of a function of a single measured quantity equals the product of the derivative of the function (Art. 20) by the probable error of the measured quantity.

Test of precision. To test a given set of measurements of an unknown quantity, make use of the normal distribution of residuals for the purpose of obtaining a comparison of the data of the experiment with results established by theory and confirmed by practice. By Table 3, the normal number of residuals ($= y$) numerically less than an assumed value ($= a$) for n measurements can be written down; the probable error of a single observation is r (see p. 17).

Table 3. Normal distribution of residuals; values of ratio y/n

a/r	0.0	0.1	0.2	0.3	0.4	0.5	0.6	0.7	0.8	0.9
0	0.000	0.054	0.107	0.160	0.213	0.264	0.314	0.363	0.4105	0.456
1	0.500	0.542	0.582	0.619	0.655	0.688	0.7195	0.7485	0.775	0.800
2	0.823	0.843	0.862	0.879	0.8945	0.908	0.9205	0.931	0.941	0.9495
3	0.957	0.9635	0.969	0.974	0.978	0.982	0.985	0.987	0.990	0.9915
4	0.993	0.994	0.995	0.996	0.997	0.998	0.998	0.9985	0.9988	0.999
5	0.999	.....	.....	.....	.....	.....	.....	.....	.....	.....
∞	1.000	.....	.....	.....	.....	.....	.....	.....	.....	.....

a	a/r	y	Y	Actual
0.00	0.00	0.00	.....	.....
0.05	0.37	7.84	8	9
0.10	0.74	15.2	7	6
0.20	1.5	27.5	12	12
0.30	2.2	34.5	7	8
0.40	2.9	38	4	3
∞	∞	40	2	2

Example. In an experiment 40 measurements were made and the probable error of a single observation was $r = 0.136$. For $a = 0.05$, $a/r = 0.37$. The above table gives $y/n = 0.196$. Hence $y = 7.84$, that is, there should be normally 8 residuals not exceeding 0.05 in numerical value. Values of y are tabulated corresponding to assumed values of a, and under Y is written down the normal distribution of residuals for the experiment, namely, 8 residuals not exceeding 0.05, 7 residuals numerically between 0.05 and 0.10, inclusive, etc. Actual numbers of residuals are given in the last column; comparison shows a satisfactory result.

Rejection of measurements. To test for rejection, calculate y/n by the formula $y/n = (2n - 1)/2n$, and from the above table find a/r, and then a. This value of a gives a maximum numerical value for all residuals, and any measurement in which the residual exceeds this value should be rejected.

Example. In the experiment above, $n = 40$, and $y/n = (80 - 1)/80 = 0.987$. Hence $a/r = 3.7$, and $a = 3.7 \times 0.136 = 0.50$. No residual should exceed 0.50 in numerical value. Maximum residual in the experiment was 0.45.

Constant errors due to some fixed cause such as conditions under which the experiment was made, defects in instruments, personal peculiarity of observer, etc., are supposed to have been detected and eliminated before the methods explained above are applied.

Solution of a system of linear equations by least squares. The problem of determining the empirical law satisfied by given data (Art. 25) involves the solution of a system of linear equations in which the number of equations exceeds the number of unknowns. For such a system the question is the most probable values of the unknowns. The method of solution of a system with three unknowns x, y, z illustrates the general method. (6)

Example. The data of the experiment establish a system of n OBSERVATION EQUATIONS with unknowns x, y, z. Form a system of NORMAL EQUATIONS equal in number to the number of unknowns as follows: (1) Multiply each observation equation by the coefficient of x in that equation, and add the resulting equations. This gives the first normal equation in which $a_1^2 + a_2^2 + \ldots + a_n^2 = [aa]$; $a_1b_1 + a_2b_2 + \ldots + a_nb_n = [ab]$, etc., adopting a convenient notation. (2) Multiply each observation equation by the coefficient of y in that equation, and add the resulting equations. This gives the second normal equation. (3) Multiply each observation equation by the coefficient of z in that equation, and add the resulting equations. This gives the third and, in this example, last normal equation. (4) Solve the normal equations for x, y, z. For these values, x', y', z', the sum of the squares of the left-hand members of the observation equations, will be less than for any other values of x, y, z.

$$a_1x + b_1y + c_1z + d_1 = 0$$
$$a_2x + b_2y + c_2z + d_2 = 0$$
$$\cdot \quad \cdot \quad \cdot \quad \cdot$$
$$\cdot \quad \cdot \quad \cdot \quad \cdot$$
$$a_nx + b_ny + c_nz + d_n = 0$$

Normal equations

$$[aa]x + [ab]y + [ac]z + [ad] = 0$$
$$[ba]x + [bb]y + [bc]z + [bd] = 0$$
$$[ca]x + [cb]y + [cc]z + [cd] = 0$$

The problem is to be regarded as one in which n observations are made upon the linear function $ax + by + cz + d$ of x, y, z, each observation establishing a set of values of a, b, c, d. The probable error r of a single observation is given by

$$r = \frac{0.6745}{\sqrt{n-q}}\sqrt{v_1^2 + v_2^2 + \ldots + v_n^2}, \text{ (standard formula)}$$

or

$$r = \frac{0.8453}{\sqrt{n(n-q)}}(|v_1| + |v_2| + \ldots + |v_n|), \text{ (approximate formula)}$$

where

q = the number of unknowns, $v_1 = a_1x' + b_1y' + c_1z' + d_1$

$v_2 = a_2x' + b_2y' + c_2z' + d_2$, etc.

12. INTEREST AND ANNUITIES

Compound interest. Let P = principal, i = interest on one dollar per year, n = number of years, A = amount after n years. Then $A = P(1 + i)^n$, when interest is compounded annually.

$A = P(1 + i/t)^{nt}$, when interest is compounded t times per year. From the first formula, $P = A/(1 + i)^n$, which gives the principal when the other quantities are known; $n = (\log A - \log P)/\log(1 + i)$, giving time.

Table 30, Sec. 22, gives values of A when $P = 1$, $t = 1$, that is, gives values of A computed by the formula $A = (1 + i)^n$. This table can be used also when interest is compounded more often than once a year by taking i/t as percentage rate, and nt as number of years. For example, if interest is compounded semi-annually, halve the rate and double the time. To find amount, multiply the number in the table by the principal. Table 31, Sec. 22, gives the principal which will amount to (present value of) one dollar in a given time at a given rate when interest is compounded annually, that is, is computed from $P = 1/(1 + i)^n$. For interest periods less than one year, proceed as above. To find the present value of any sum (discount any sum), multiply tabular number by this sum. (7)

Annuity. An annuity is a series of equal payments made at equal periods of time, the first payment being made at the end of the first period. Let R = payment, i = interest on one dollar per year, n = number of years during which payments are continued, A = amount of annuity after n years, P = present value; then $A = R[(1 + i)^n - 1]/i$, when payments are made annually and interest is compounded annually.

Table 32, Sec. 22, gives the amount of an annuity of one dollar for various rates and periods. For the amount of an annuity of any sum, multiply the tabular number by the sum. Formula for present value is $P = R(1 - (1 + i)^{-n})/i$. Table 33, Sec. 22, gives the present value of an annuity of one dollar extending over a given period with money at a given rate. For the present value of an annuity of any sum, multiply the tabular number by the sum. Table 34, Sec. 22, gives the annuity which will amount to one dollar in a given time at a given rate. (Tabular numbers are reciprocals of those in Table 32, Sec. 22.) To find the annual payment which will amount to a given sum in a given time at a given rate (SINKING FUND), multiply the tabular number by the sum.

Example. To provide a sinking fund of \$100,000 in 20 years if money accumulates at 4%, the annual sum to be set aside equals $100,000 \times 0.033582$ (tabular number in Table 34, Sec. 22, opposite 20 years under 4%), that is, \$3,358.20.

Cost of an annuity. Annuity which a given sum P will purchase, when the annuity is to extend over a given period and money is worth a given rate, is found as follows: add the given rate in cents to the tabular number in Table 34, Sec. 22, which corresponds to period and rate, and multiply the sum by P.

Example. For 20 years at rate 4% the tabular number in Table 34, Sec. 22, is 0.033582. Adding 0.04 gives 0.073582. Hence \$100,000 will purchase an annuity of \$7,358.20 terminating after 20 years, when money is worth 4%.

Mine valuation (8). The annual profit earned by a mine may be regarded as an annuity which must provide a dividend return on capital plus an annual sum to be set aside for a sinking fund that will amortize the capital. The value of the mine is the present value of the annual profit so regarded. If P = the annual profit considered assured for a period of years, value of mine is found as follows: Find the tabular number for period and rate earned by payments into sinking fund from Table 34, Sec. 22. Add the dividend on one dollar to this number and divide the annual profit by the sum. (Table 9, Sec. 22, is useful to replace division by multiplication.)

Example. Annual profit is estimated at \$200,000 for 10 years. Payments into sinking fund earn 4% and dividend on capital invested is 7%. Tabular number (Table 34) for 10 years and 4% is 0.083291. Adding dividend rate 0.07, gives 0.153291. Reciprocal of 0.1533 (Table 9, Sec. 22) = 6.523. Present value of mine = $6.523 \times 200{,}000$ = \$1,304,600.

Amortization. To determine the number of years that a given rate of income on capital must continue in order to amortize capital, pay a given rate of interest on capital, with annual payments into a sinking fund accumulating at a given rate per cent., proceed as follows: In Table 34, Sec. 22, in the column under "Rate of accumulating sinking fund," find the number equal to the difference between the rate of income earned and the dividend rate. Then the time required is the corresponding value of time in the first column (interpolation may be used if justified by the problem).

Example. Rate of income earned is 10%, dividends paid 7%, sinking fund accumulates at 4%. Then from Table 34, under 4%, number 0.03 (= 0.10 − 0.07) occurs for a time between 21 and 22 years. (Interpolation gives 21.6 years.)

ELEMENTARY GEOMETRY

13. PLANE FIGURES

Triangles. Sum of angles equals 180°. Exterior angle equals the sum of the opposite interior angles ($\angle XAB = \angle B + \angle C$, Fig. 6, item *a*). MEDIAN is the line joining a vertex to the midpoint of the opposite side; the medians (item *a*) meet in a point G, which is the center of gravity of the triangle; G trisects each median. BISECTORS OF ANGLES meet in a point M (item *b*) equidistant from all sides, and therefore the center of the inscribed circle (INCENTER). The bisector of an angle divides the opposite side into segments proportional to the other two sides, *i.e.*, $AE : EC = AB : BC$ (item *b*). ALTITUDES of a triangle meet in a point (ORTHOCENTER). The perpendicular bisectors of the sides of a triangle meet in a point O (item *c*) equidistant from all vertices, and therefore the center of the circumscribed circle (CIRCUMCENTER). The longest side of a triangle is opposite the largest angle and *vice versa*. The line joining the mid-points of two sides of a triangle is parallel to the third side and half its length.

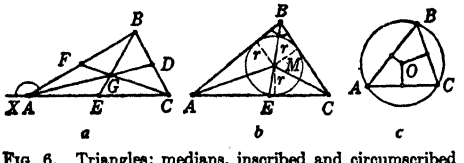

FIG. 6. Triangles; medians, inscribed and circumscribed circles.

Orthogonal projection. In Fig. 7, items *a*, *b*, AE is the ORTHOGONAL PROJECTION of AB on AC, BE being perpendicular to AC. The square of the side opposite an acute angle equals the sum of the squares of the other two sides diminished by twice the product of one of these sides by the orthogonal projection of the other side upon it. In item *a*, $a^2 = b^2 + c^2 - 2b \cdot AE$. The square of the side opposite an obtuse angle equals the sum of the squares of the other two sides increased by twice the product of

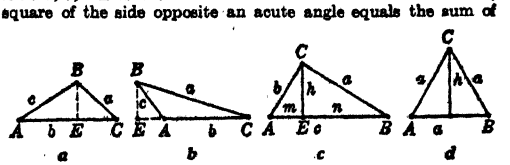

FIG. 7. Triangles.

one of these sides by the orthogonal projection of the other side upon it. In item *b*, $a^2 = b^2 + c^2 + 2b \cdot AE$.

Right triangle (Fig. 7, item *c*). $\angle A + \angle B = 90°$. $c^2 = a^2 + b^2$. The ALTITUDE CE ($= h$) drawn from vertex of right angle C upon HYPOTENUSE (c), divides the hypotenuse into segments AE ($= m$) and BE ($= n$) such that $h^2 = mn$, $b^2 = cm$, $a^2 = cn$. The median drawn from C equals $1/2\ c$.

Equilateral triangle (Fig. 7, item *d*). Side $= a$. Each angle $= 60°$. ALTITUDE, $h = 1/2\ a\sqrt{3}$. RADIUS OF CIRCUMSCRIBED CIRCLE, $R = 1/3\ a\sqrt{3}$. RADIUS OF INSCRIBED CIRCLE, $r = 1/6\ a\sqrt{3}$.

Trapezoid is a figure bounded by four lines, two of which are parallel (Fig. 8). ALTITUDE is the perpendicular distance between the parallel sides. MID-LINE (EF) joins the mid-points of the non-parallel sides and equals half the sum of the parallel sides. ($m = (a + b)/2$).

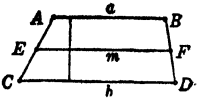

FIG. 8. Trapezoid.

Polygon. Sum of interior angles equals 180° multiplied by the number of sides less two.

Circles. Straight line perpendicular to a radius at its extremity is tangent. Parallel lines intercept equal arcs. When two circles intersect, the LINE OF CENTERS bisects the common chord at right angles. If two circles are tangent to each other, the line of centers passes through the point of contact. AREAS OF TWO CIRCLES have the same ratio as the squares of their diameters or radii.

Angle measurement. The angle inscribed in a semi-circle is a right angle. The angle formed by two chords intersecting on a circle (INSCRIBED ANGLE) is measured by half the arc intercepted between its sides ($\angle BAC$ (Fig. 8A, item *a*) measured by half BC). Angle formed by a tangent and a chord drawn from the point of contact is measured by half the intercepted arc ($\angle BAT$ (item *a*) measured by $1/2\ BCA$). Angle formed by two chords intersecting within a circle is measured by half the sum of the intercepted arcs ($\angle BAC$ (or EAF) (item *b*) measured by $1/2$ (arc BC + arc EF)). Angle formed by two secants, or two tangents, or a tangent and a secant, intersecting without a circle, is measured by half the difference of the intercepted arcs. In item *c*, $\angle BAC$ is measured by $1/2$ (arc BC − arc EF); in item *d*, $\angle BAE$ is measured by $1/2$ (arc BDE − arc BCE), and $\angle BAC$ is measured by $1/2$ (arc BD − arc BC).

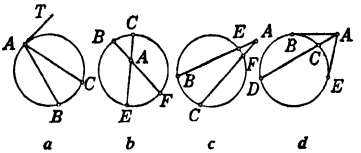

FIG. 8A. Angle measurement.

Chords, secants, and tangents. In Fig 8A, item *b*, the product of segments AC and AE equals the product of segments AB and AF. In item *c*, the product of the whole secant AB and the external segment AE equals the product of the whole secant AC and its external segment AF. In item *d*, the product of the whole secant AD and the external segment AC equals the square of tangent AB (or AE).

Similar figures. Similar polygons have their angles respectively equal and the homologous sides proportional. TRIANGLES ARE SIMILAR if their angles are respectively equal, or if their sides are respectively proportional, or if they have an angle of one equal to an angle of the other and the including sides proportional. AREAS of similar polygons are to each other as the squares of homologous sides.

Regular figures. A regular polygon is one with equal sides and equal angles. A circle may be drawn to pass through all vertices of a regular polygon (CIRCUMSCRIBED CIRCLE), or to be tangent to every side (INSCRIBED CIRCLE). Two regular polygons of the same number of sides are similar.

Geometrical Constructions

Lines. TO BISECT A STRAIGHT LINE. AB (Fig. 9, item *a*); with A and B as centers and with equal radii sufficiently great, describe arcs intersecting at C and D; draw CD, cutting AB at E, the mid-point of AB.

TO ERECT A PERPENDICULAR AT A POINT C, in a line AB (Fig. 9, item *c*). (1) Lay off $CD = CE$, and with D and E as centers and with equal radii sufficiently great, describe arcs intersecting at F; draw FC, the perpendicular required. Or (2), (item *d*), take any convenient point D not on AB and with radius DC describe a circle cutting AB at E. Draw diameter EDF. Then FC is the required perpendicular.

TO DROP A PERPENDICULAR FROM A POINT C to a line AB (item *e*). (1) With C as center and a radius sufficiently great, describe an arc cutting AB at D and E; with D and E as centers, describe arcs intersecting at F; draw CF, the required perpendicular. (2) When C is nearly above one end of the line (item *f*), with C as center and radius 5 convenient units describe an arc cutting AB at D. Lay off DF equal to 4 units and draw CF, the required perpendicular.

TO DRAW A LINE THROUGH A POINT C PARALLEL to given line AB (item *g*), draw CD perpendicular to AB, and erect a perpendicular CE to CD at C; CE is parallel to AB.

To DRAW A LINE PARALLEL TO A GIVEN LINE AB at a given distance from it (item *h*); with the given distance as radius and with any centers m and n on AB describe arcs xy and zw, respectively; CD, touching these arcs, is the required line.

To DIVIDE A LINE AB into a given number of equal parts (item *i*), draw AD making any angle with AB and draw BC parallel to AD; with dividers lay off equal lengths on AD and BC a number of times one less than the number of equal parts into which AB

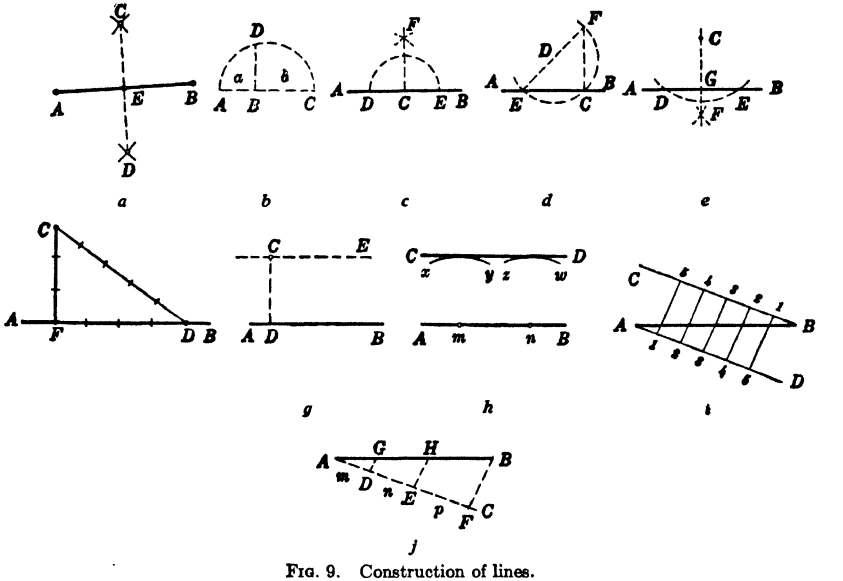

FIG. 9. Construction of lines.

is to be divided; number the points of division consecutively from A and from B and join as in the figure; the connecting lines divide AB as required.

To divide a given line AB into segments proportional to any number of given lines (item *j*), draw AC, making any convenient angle with AB; lay off AD, DE, and EF equal to the given lines m, n, p; draw FB, and construct EH and DG parallel to FB; AG, GH, HB are the required segments.

To CONSTRUCT THE MEAN PROPORTIONAL between two given lines (item *b*), draw a line AC on which AB and BC equal the given lines, a, b; construct semi-circle on AC as diameter; erect a perpendicular to AC at B, intersecting the semi-circle at D; BD is the mean proportional between AB and BC.

Angles. To BISECT a given angle CAB (Fig. 10, item *a*), with A as center, and with any convenient radius AD describe an arc cutting AC in D and AB in E; with D and E as centers and with equal radii sufficiently great, describe arcs intersecting in F; AF bisects $\angle A$.

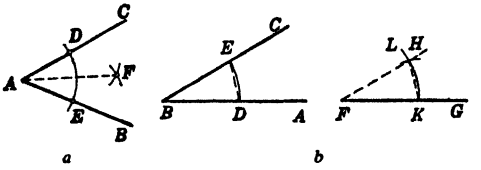

FIG. 10. Construction of angles.

To CONSTRUCT AN ANGLE EQUAL TO A GIVEN ANGLE ABC when one side FG and the vertex F are given (item *b*), with center B and a convenient radius BD describe arc DE; with the same radius and center F, draw arc KL; with radius equal to chord DE and with center K draw an arc cutting the arc KL at H; HFG is the required angle.

Circles. To CIRCUMSCRIBE a circle about a given triangle (Fig. 11, item *a*), construct perpendicular bisectors of two sides; their point of intersection is the required circumcenter.

To INSCRIBE a circle in a given triangle (item *b*), draw bisectors of two angles intersecting in O (incenter); from O, draw OD perpendicular to BC; a circle with center O and radius OD is the required circle.

To DRAW A TANGENT to a given circle through a given point P: (1) *When P is on circle* (item *c*), draw radius OP, and construct AB perpendicular to OP at P; AB is the required

tangent. (2) *When P is without the circle* draw a line joining P and O, the center of circle (item *d*); with OP as diameter describe a circle intersecting the given circle at A and B; draw PA and PB, each of which is tangent to the given circle.

To DRAW A COMMON TANGENT to two given circles, with centers O and O' and unequal radii r and r', $r > r'$. (1) When the given circles do not intersect (item *f*), to draw a

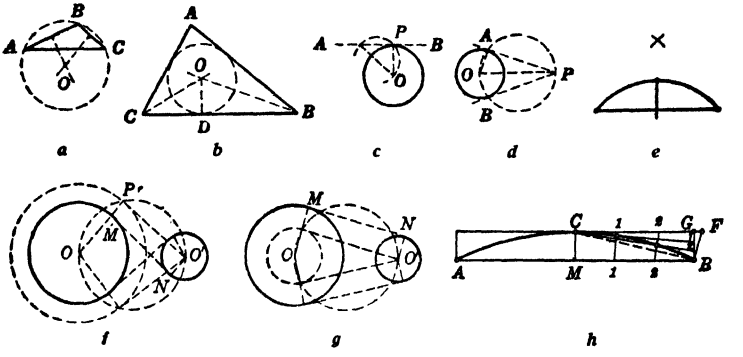

FIG. 11. Construction of circles.

COMMON INTERNAL TANGENT, construct a circle having same center O as larger circle and a radius equal to the sum of the radii of the given circles $(r + r')$; construct a tangent $O'P'$ from center O' of the small circle to this circle; construct $O'N$ perpendicular to this tangent; draw OP'; then line MN, joining the extremities of the radii OM and $O'N$, is a common tangent. Item *f* shows two such common internal tangents. (2) To draw a COMMON EXTERNAL TANGENT (item *g*), construct a circle having a common center with the larger circle and radius equal to the difference of radii $(r - r')$; construct a tangent to this circle from the center of the smaller circle; the line joining the extremities M, N, of the radii of the given circles perpendicular to this tangent is the required common tangent. There are two such tangents.

In item *f*, $MN = \sqrt{c^2 - (r + r')^2}$, when $OO' = c$. In item *g*, $MN = \sqrt{c^2 - (r - r')^2}$.

To BISECT A GIVEN ARC of a circle, draw the perpendicular bisector of the chord of the arc (item *e*); the point in which this bisector meets the arc is the required mid-point.

To LAY OUT A CIRCULAR ARC OF LARGE RADIUS (item *h*). Let AB be the chord of the desired arc and MC the height, MC being the perpendicular bisector of AB; draw CB, and at B erect BF perpendicular to CB and BG perpendicular to AB; divide CF, MB, BG into the same number of equal parts; connect corresponding points of division on CF and MB, and draw lines from C to points of division on BG, as in the figure. In this manner as many points on the required arc can be determined as desired.

Let $CM = h$, $AB = 2b$. Then radius of arc $= (b^2 + h^2)/2h$.

Loci. All points equidistant from a given point lie on a circle whose center is the given point. All points equidistant from two given points lie on perpendicular bisector of the line joining the given points. All points equidistant from the sides of a given angle lie on the bisector of the angle. If a point moves so that the ratio of its distances from two fixed points remains constant, it will lie upon a circle. In Fig. 12, item *a*, PA/PB remains constant while P describes the circle. Diameter DE is determined by drawing bisectors of angles APB and BPE. If a side AB and the opposite angle of a triangle (Fig. 12, item *b*) are given, vertex E of angle will lie on a circle of which the given side is a chord. This circle is constructed as follows: construct $\angle ABC$ equal to the given angle; erect BM perpendicular to CB and draw the perpendicular bisector DP of AB; the point of intersection of BM and DP is the center of the required circle.

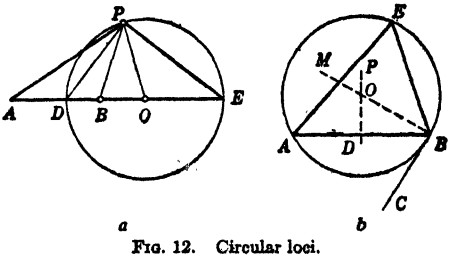

FIG. 12. Circular loci.

Polygons. To construct a SQUARE WITH A GIVEN SIDE AB (Fig. 13, item *a*), erect a perpendicular at A, lay off $AC = AB$, and from C and B as centers, with radius equal to AB, describe arcs intersecting at the fourth vertex D.

To construct a SQUARE WITH A GIVEN DIAGONAL AC (item *b*), draw a circle on AC as diameter, and erect the diameter BD perpendicular to AC; $ABCD$ is the required square.

To inscribe a SQUARE IN A GIVEN CIRCLE, draw perpendicular diameters AC and BD (item *b*); their extremities are the vertices of the inscribed square.

To inscribe a HEXAGON IN A CIRCLE, step around the circle with dividers set to the radius (item *c*).

To construct a HEXAGON WITH A SIDE OF GIVEN LENGTH, draw a circle with radius equal to given side, and inscribe a regular hexagon in this circle. If the side of a regular hexagon = a, and the distance between parallel sides = d, then $d = a\sqrt{3} = 1.732a$.

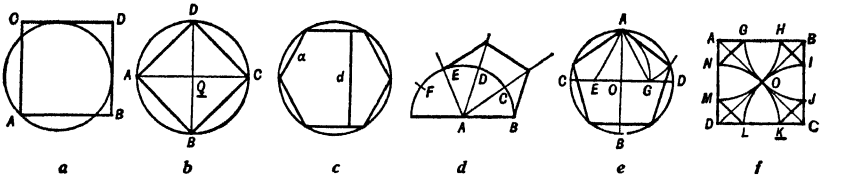

FIG. 13. Construction of polygons.

To draw a REGULAR POLYGON of any desired number of sides, when one side AB is given, draw a semi-circle with radius AB (item *d*), and divide this semi-circle into as many equal parts BC, CD, DE, etc., as the required polygon has sides; draw a line from A through each point of division except the last, and complete the construction as indicated.

To inscribe a REGULAR PENTAGON in a given circle, draw perpendicular diameters AB and CD (item *e*); bisect radius OC at E; with E as center, strike an arc through A cutting OD at G; AG equals a side of the pentagon required.

To inscribe a REGULAR OCTAGON in a circle, draw perpendicular diameters, and bisect each of the four equal arcs determined by the extremities of these diameters.

To convert a SQUARE INTO AN OCTAGON, draw diagonals AC and BD, intersecting at O (item *f*); with vertices A, B, C, D as centers and radius AO draw arcs cutting the sides of the square in eight points; these intersections are the required vertices.

Mensuration of Plane Figures

Square. Side = a, diagonal = d.

$d = a\sqrt{2} = 1.414a.$ $\quad a = \frac{1}{2}d\sqrt{2} = 0.707d.$ $\quad$ ***Area*** $= a^2 = \frac{1}{2}d^2.$

Rectangle. Sides = a, b; diagonal = d.

$d^2 = a^2 + b^2.$ $\quad$ ***Area*** $= ab.$

Parallelogram. Sides = a, b; altitude on side $a = h$; diagonals = d_1, d_2; acute angle at vertex = C.

$d_2^2 = a^2 + b^2 - 2ab\cos C.$ $\quad d_1^2 = a^2 + b^2 + 2ab\cos C.$

$d_1^2 + d_2^2 = 2(a^2 + b^2).$ $\quad$ ***Area*** $= ah.$

Rhombus. Each side = a; diagonals = d_1, d_2.

$d_1^2 + d_2^2 = 4a^2.$ $\quad$ ***Area*** $= \frac{1}{2}d_1d_2.$

Trapezoid. Parallel sides = a, b; altitude = h; mid-line (EF, Fig. 8) = m.

Area $= \frac{1}{2}h(a + b) = hm.$

Triangle. Sides = a, b, c; angles = A, B, C (see Fig. 7 for correspondence between lettering of sides and angles); altitude on side $a = h$; radius of inscribed circle = r, radius of circumscribed circle = R. Let $s = \frac{1}{2}(a + b + c)$.

$r = \sqrt{(s-a)(s-b)(s-c)/s};$ $\quad R = \frac{1}{2}a/\sin A = \frac{1}{2}b/\sin B = \frac{1}{2}c/\sin C.$

Area $= \frac{1}{2}$ *base* $\times$ *altitude* $= \frac{1}{2}ah = \frac{1}{2}ab\sin C = \frac{1}{2}bc\sin A = \frac{1}{2}ca\sin B = rs = \frac{1}{4}abc/R = \sqrt{s(s-a)(s-b)(s-c)} = 2R^2\sin A\sin B\sin C = r^2\cot\frac{1}{2}A\cot\frac{1}{2}B\cot\frac{1}{2}C = \frac{1}{2}a^2\sin B\sin C/\sin A.$

Length of median from vertex $A = \frac{1}{2}\sqrt{2(b^2 + c^2) - a^2}.$

Length of bisector of angle $A = \sqrt{ab[(a + b)^2 - c^2]}/(a + b).$

Equilateral triangle. Side = a; altitude = h.

$h = \frac{1}{2}a\sqrt{3} = 0.86603a.$ *Area* $= \frac{1}{4}a^2\sqrt{3} = 0.43301a^2.$

Right triangle. Sides = a, b; hypotenuse = c.

$c^2 = a^2 + b^2.$ *Area* $= \frac{1}{2}ab = \frac{1}{2}a^2 \tan B = \frac{1}{2}a^2 \cot A = \frac{1}{4}c^2 \sin 2A.$

Any quadrilateral. Sides = a, b, c, d; diagonals = d_1, d_2 forming acute angle D; line joining mid-points of diagonals = m.

$a^2 + b^2 + c^2 + d^2 = d_1^2 + d_2^2 + 4m^2.$ *Area* $= \frac{1}{2}d_1d_2 \sin D.$

Quadrilateral inscribed in a circle (Fig. 14). Sum of opposite angles = 180°. Sides = a, b, c, d; angle formed by sides a and $b = X$; diagonals = e, f. Let $s = \frac{1}{2}(a + b + c + d)$.

$ac + bd = ef.$ *Area* $= \sqrt{(s-a)(s-b)(s-c)(s-d)} = (ab + cd) \sin X.$

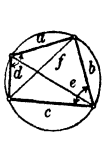

FIG. 14. Inscribed quadrilateral.

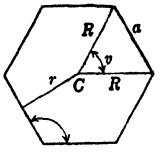

FIG. 15. Regular polygon.

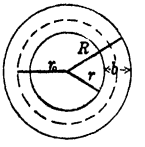

FIG. 16. Annulus.

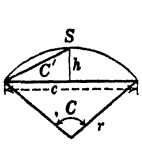

FIG. 17. Sector and segment.

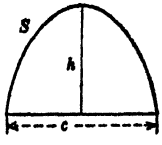

FIG. 18. Parabolic segment.

Regular polygons (Fig. 15). Side = a, number of sides = n.

Vertex angle $= 360°(n-2)/n.$ *Central angle* (as v) $= 360°/n.$

$r = \frac{1}{2}a \cot \frac{1}{2}v = \frac{1}{2}a \tan \frac{1}{2}A.$ $R = \frac{1}{2}a/\sin \frac{1}{2}v = \frac{1}{2}a/\cos \frac{1}{2}A.$

Area $= \frac{1}{2}nar = a^2(\frac{1}{4}n \cot \frac{1}{2}v) = a^2k.$ k, see Table 4.

Table 4. Values of k for area of regular polygon

n	3	4	5	6	7	8	9	10	11	12
k	0.433	1.000	1.720	2.598	3.634	4.828	6.182	7.694	9.366	11.196

Circle. Radius $= r$, diameter $= d$. See Tables 10, 11, Sec. 22.

Ratio of circumference to diameter $= \pi = 3.1415927.$

Circumference $= 2\pi r = \pi d.$ *Area* $= \pi r^2 = \frac{1}{4}\pi d^2 = 0.7854d^2.$

Circular ring (ANNULUS). (Fig. 16.) Outer radius $= R$, inner radius $= r$, mean radius $= r_0$, width $= b$.

$r_0 = \frac{1}{2}(R + r).$ $b = R - r.$

Area $= \pi(R^2 - r^2) = \pi(R + r)(R - r) = 2\pi r_0 b.$

Circular arc. Radius $= r$, length of arc $= S$, central angle $= C$.

$S = rC$ (C in radians) $= \pi rC/180 = 0.01745rC$ (C in degrees). See Tables 14 to 17, Sec. 22. If chord of arc (Fig. 17) $= c$, and chord of half the arc $= C'$, then $S = 2C' + \frac{1}{3}(2C' - c)$ approximately (HUYGHEN'S FORMULA).

Circular sector (Fig. 17). *Area* $= \frac{1}{2}Sr = \frac{1}{2}r^2C$ (C in radians) $= \pi r^2C/360 = 0.008727r^2C$ (C in degrees).

Circular segment (Fig. 17). Height of segment $= h$, chord $= c$, chord of half arc $= C'$.

$C'^2 = 2hr$ $c = 2r \sin \frac{1}{2}C$ $h = r(1 - \cos \frac{1}{2}C)$ $r = (\frac{1}{4}c^2 + h^2)/2h$

Area $= \frac{1}{2}r^2(C - \sin C)$, where angle C is in radians, $= \frac{1}{2}(rS + ch - cr).$

Approximate formula: *Area* $= \frac{4}{3}h^2\sqrt{2r/h - 0.608}.$ See also Table 12, Sec. 22.

Parabolic segment (Fig. 18). Chord $= c$, height $= h$, arc $= S$.

Area $= \frac{2}{3}ch.$ $S = \frac{1}{2}\sqrt{c^2 + 16h^2} + \frac{c^2}{8h}$ Nap log $(4h + \sqrt{c^2 + 16h^2})/c.$

Area between two chords c and C (parallel and at a distance d apart) $= \frac{2}{3}d\,\frac{C^3 - c^2}{C^2 - c^2}.$

Ellipse (Fig. 19). Semi-axes: major = a, minor = b.

Area between BB′ and PP′ = $xy + ab \sin^{-1}x/a$. *Area of ellipse* = πab.
Area of sector AOP = $\frac{1}{2}ab \cos^{-1}x/a$. *Perimeter of ellipse* = $4aE$.

Values of E for $t = b/a$ are in Table 5.

Table 5. Values of E for perimeter of ellipse

t	0	0.1	0.2	0.3	0.4	0.5	0.6	0.7	0.8	0.9	1.0
E	1.000	1.016	1.051	1.097	1.151	1.211	1.276	1.346	1.418	1.493	1.571

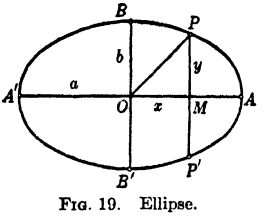

Fig. 19. Ellipse.

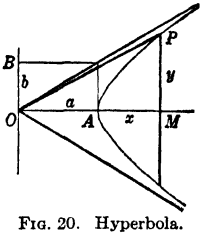

Fig. 20. Hyperbola.

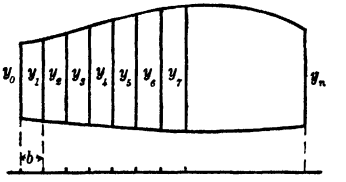

Fig. 21. Irregular area.

Hyperbola (Fig. 20). Semi-axes, transverse = a, conjugate = b.

Area AMP = $\frac{1}{2}xy - \frac{1}{2}ab \ln (x/a + y/b)$.
Area OAP = $\frac{1}{2}ab \ln (x/a + y/b) = \frac{1}{2}abu$, where $x = a \cosh u$.

Cycloid. (See Fig. 57.) Radius of rolling circle = a.

Length of arc OP = $4a(1 - \cos \frac{1}{2}\theta)$. *Length of entire arc OMN* = $8a$.
Area between arc OMN and base OX = $3\pi a^2$ = *three times area of rolling circle.*

Epicycloid (Fig. 59).

Arc AP = $4r(R + r)(1 - \cos (R\theta/2r))/R$.
Area AOP = $[r(R + r)(R + 2r)](R\theta/r - \sin R\theta/r)/2R$.

Hypocycloid (Fig. 60). Formulas for arc and area are the same as for epicycloid with sign of r changed.

Catenary (Fig. 64).

Arc BP = $a \sinh x/a = \sqrt{y^2 - a^2}$ where x, y, are co-ordinates of P.

Area OMPB = $a^2 \sinh x/a = a\sqrt{y^2 - a^2}$.

Spiral of Archimedes (Fig. 65).

Arc OP = $\frac{1}{2}a[\theta\sqrt{1 + \theta^2} + \ln (\theta + \sqrt{1 + \theta^2})]$ (θ in radians).

Simpson's rule for approximate measure of an area (Fig. 21). Divide the area by equidistant parallel lines into an even number n of strips each of width b, and denote the lengths of the parallel sides of these strips successively by $y_0, y_1, y_2, y_3 \ldots, y_n$. Then an approximate value for the area is

Area = $\frac{1}{3}b(y_0 + 4y_1 + 2y_2 + 4y_3 + 2y_4 + \ldots + 4y_{n-1} + y_n)$, or
$= \frac{1}{3}b[(y_0 + y_n) + 4(y_1 + y_3 + y_5 + \ldots y_{n-1}) + 2(y_2 + y_4 + y_6 + \ldots y_{n-2})]$.

The larger the number of strips the closer the approximation.

14. MENSURATION OF SOLIDS

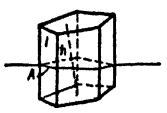

Fig. 22. Prism.

Prism (Fig. 22) is a solid, any transverse section of which is a polygon, and the bases of which are parallel, similar, and equal in area. Perimeter of a plane section A cutting all edges at right angles (RIGHT SECTION) = c; length of lateral edge = l; altitude (perpendicular distance between upper and lower bases) = h, area of base = B.

Lateral surface = cl. *Volume* = Bh.

Right-circular cylinder. Diameter of base = d, altitude = h.

Lateral surface = πdh. *Total surface* = $\pi d(h + \frac{1}{2}d)$. *Volume* = $\pi d^2h/4$.

Truncated right-circular cylinder. Diameter of circular base = d, arithmetic mean of longest and shortest elements = h.

Lateral surface = πdh. *Volume* = $\pi d^2h/4$.

Truncated triangular prism. Area of base = B, lengths of edges = a, b, c.

Volume = $\frac{1}{3}B(a + b + c)$.

Ungula of right-circular cylinder (Fig. 23). Base is a circular segment with central angle 2α (radians) and area B.

Lateral area = $hr(2 \sin \alpha - \alpha \cos \alpha)/(1 - \cos \alpha)$.
Volume = $h(\frac{2}{3}r^2 \sin^3 \alpha - B \cos \alpha)/(1 - \cos \alpha)$.

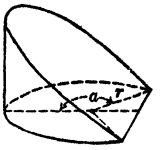

FIG. 23. Ungula.

Hollow right-circular cylinder. Outer and inner diameters = D, d, altitude = h, thickness = t.

Volume = $\pi ht(D + d)/2$.

Regular pyramid. Base is a regular polygon; lateral faces are equal isosceles triangles. Side of base = a, area of base = B, altitude of a lateral face (slant height of pyramid) = s, altitude of pyramid = h.

Lateral area = $\frac{1}{2}nas$. *Volume* = $\frac{1}{3}Bh$.

Right-circular cone. Radius of base = r, slant height = s, altitude = h.

$s = \sqrt{h^2 + r^2}$. *Lateral area* = πrs. *Total area* = $\pi r(s + r)$.
Volume = $\frac{1}{3}\pi hr^2$.

Frustum of a regular pyramid (bases parallel). Altitude of a lateral face (slant height of frustum) = s, perimeters of bases = p, P; areas of bases = b, B; altitude of frustum = h.

Lateral area = $\frac{1}{2}s(p + P)$. *Volume* = $\frac{1}{3}h(B + b + \sqrt{Bb})$.

Frustum of right-circular cone (bases parallel). Slant height = s, radii of bases = r_1, r_2, altitude = h.

$s = \sqrt{h^2 + (r_2 - r_1)^2}$. *Lateral area* = $\pi s(r_1 + r_2)$.
Total area = $\pi(r_1^2 + r_2^2 + s(r_1 + r_2))$. *Volume* = $\frac{1}{3}\pi h(r_1^2 + r_2^2 + r_1r_2)$.

Any pyramid or cone. Altitude = h, area of base = B.

Volume = $\frac{1}{3}Bh$.

Frustum of any pyramid or cone. Altitude = h, areas of bases = b, B.

Volume = $\frac{1}{3}h(B + b + \sqrt{Bb})$.

Regular polyhedra. Edge = a.

	Tetrahedron	Cube	Octahedron	Dodecahedron	Icosahedron
Area.....	$1.7321a^2$	$6a^2$	$3.4641a^2$	$20.646a^2$	$8.6603a^2$
Volume...	$0.1179a^3$	a^3	$0.4714a^3$	$7.6631a^3$	$2.1817a^3$

Sphere. Radius = r, diameter = d.

Area = $4\pi r^2 = \pi d^2$ = *area of four great circles.*
Volume = $\frac{4}{3}\pi r^3 = \frac{1}{6}\pi d^3$. See also Table 13, Sec. 22.

Spherical polygon is a figure on a spherical surface bounded by three or more arcs of great circles. The sum of the angles of a spherical triangle is greater than two right angles and less than six right angles. Two spherical polygons on the same sphere or on equal spheres are SYMMETRIC if the sides and angles of one are respectively equal to those of the other, but arranged in reverse order. Symmetric spherical polygons have equal areas. Sum of angles in degrees = S, number of sides = n. Spherical excess = $E = S - (n - 2)180$ (in degrees).

Area = $\pi r^2E/180$.

Zone is a portion of a spherical surface included between two parallel plane sections. Altitude = h (perpendicular distance between parallel planes), radius of sphere = r.

Area of zone = $2\pi rh$ (product of circumference of a great circle and altitude of zone).

Spherical segment is the portion of sphere included between two parallel plane sections, called bases. Radii of bases = b, B; altitude of segment = h (perpendicular distance between bases).

Volume = $\frac{1}{2}\pi h(B^2 + b^2 + \frac{1}{3}h^2)$.

Wedge (Fig. 24). Base $DEFC$ is a rectangle, $CF = b$, $EF = L$, edge $AB = l$, at perpendicular distance $RS = h$ from base.

$$Volume = {}^1/_6bh(2L + l).$$

Prismatoid. Bases are polygons in parallel planes, areas $= b$, B. Lateral faces are trapezoids or triangles whose vertices coincide with certain vertices of the bases. Altitude $= h$ (perpendicular distance between bases), area of plane section midway between bases $= m$.

$$Volume = {}^1/_6h(b + B + 4m).$$

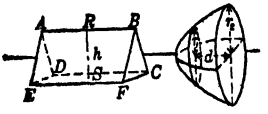

Fig. 24. Wedge.

Fig. 25. Segment of paraboloid.



Fig. 26. Ellipsoid.

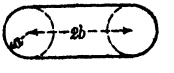

Fig. 27. Torus.

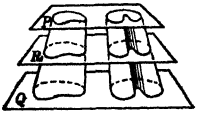

Fig. 28. Cavalieri's theorem.

Segment of paraboloid (Fig. 25). Radii of bases $= r_1$, r_2; altitude $= d$.

$$Volume = {}^1/_2\pi d(r_1^2 + r_2^2).$$

Ellipsoid (Fig. 26). Semi-axes $= a, b, c$ $\qquad Volume = {}^4/_3\pi abc.$

Torus (ANCHOR RING). (Fig. 27).

$$Area = 2\pi a \times 2\pi b = 4\pi^2 ab. \qquad Volume = \pi a^2 \times 2\pi b = 2\pi^2 a^2 b.$$

Theorems of Pappus. (1) If any closed plane figure is revolved about an exterior axis in its own plane, the volume of the solid generated equals the product of the area of the plane figure by the length of the circular path described by its center of gravity. (2) If a plane curve is revolved about an exterior axis in its plane, the area of the surface generated equals the product of the arc of the curve by the length of the circular path described by its center of gravity. These theorems are useful in determining centers of gravity when other quantities involved are known, and also in calculating areas and volumes when centers of gravity are given.

Cavalieri's theorem (Fig. 28). If two solids are included between a pair of parallel planes, and if the two sections cut from them by any plane parallel to the including planes are equal in area, then the volumes of the solids are equal.

TRIGONOMETRY

15. FUNCTIONS OF AN ACUTE ANGLE

Definitions. In Fig. 29 take any point B on either side AD of angle A, and draw BC perpendicular to the other side AE, forming the right triangle BAC. In this triangle, for angle A, $BC(= a)$ is called OPPOSITE SIDE, and AC $(= b)$ ADJACENT SIDE. The trigonometric functions of A are sine, cosine, tangent, cotangent, secant, and cosecant, defined respectively as follows:

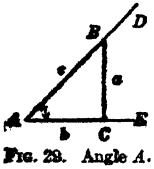

Fig. 29. Angle A.

$$\sin A = \frac{\text{opposite side}}{\text{hypotenuse}} = \frac{a}{c}, \qquad \csc A = \frac{\text{hypotenuse}}{\text{opposite side}} = \frac{c}{a},$$

$$\tan A = \frac{\text{opposite side}}{\text{adjacent side}} = \frac{a}{b}, \qquad \cot A = \frac{\text{adjacent side}}{\text{opposite side}} = \frac{b}{a},$$

$$\cos A = \frac{\text{adjacent side}}{\text{hypotenuse}} = \frac{b}{c}, \qquad \sec A = \frac{\text{hypotenuse}}{\text{adjacent side}} = \frac{c}{b}.$$

Sine and cosine are called CO-FUNCTIONS of each other, as also are tangent, and cotangent, secant and cosecant.

Versine of A = vers $A = 1 - \cos A$. Coversine of A = covers $A = 1 - \sin A$. Haversine of A = havers $A = {}^1/_2(1 - \cos A)$.

Functions of complementary angles. In the right triangle ABC (Fig. 29), angles A and B are COMPLEMENTARY ANGLES (sum $= 90°$). Any function of an angle equals the corresponding co-function of the complementary angle. Hence

$$\sin A = \cos B \qquad \tan A = \cot B \qquad \sec A = \csc B$$

$$\cos A = \sin B \qquad \cot A = \tan B \qquad \csc A = \sec B$$

Functions of special angles. In Fig. 30, triangle ABC is an ISOSCELES RIGHT TRIANGLE, $AC = BC$, angle A = angle $B = 45°$, sides AC and BC are of unit length and $AB = \sqrt{2}$. Triangle ABD is equilateral with sides 2 units in length, each angle is 60°; in right triangle ABC therein, $A = 60°$, B = 30°, $BC = \sqrt{3}$. Functions are given in Table 6.

Tables for trigonometric functions and for their logarithms are given in Sec. 22. The values are obtainable, with less precision, by slide rule (Art. 1).

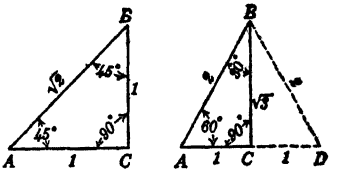

FIG. 30. Angles of 30, 45, and 60 degrees.

Table 6. Functions of special angles

Angle	Sin	Cos	Tan	Cot	Sec	Csc
0° and 360°	0	1	0	∞	1	∞
30°	1/2	$\sqrt{3}/2$	$\sqrt{3}/3$	$\sqrt{3}$	$2\sqrt{3}/3$	2
45°	$\sqrt{2}/2$	$\sqrt{2}/2$	1	1	$\sqrt{2}$	$\sqrt{2}$
60°	$\sqrt{3}/2$	1/2	$\sqrt{3}$	$\sqrt{3}/3$	2	$2\sqrt{3}/3$
90°	1	0	∞	0	∞	1
180°	0	−1	0	∞	−1	∞
270°	−1	0	∞	0	∞	−1

Relations Between Functions

$$\sin^2 A + \cos^2 A = 1 \qquad \sec^2 A = 1 + \tan^2 A \qquad \csc^2 A = 1 + \cot^2 A$$

$$\sin A = 1/\csc A \qquad \tan A = 1/\cot A \qquad \sec A = 1/\cos A$$

$$\sin A = \sqrt{1 - \cos^2 A} = \tan A/\sqrt{1 + \tan^2 A} = 1/\sqrt{1 + \cot^2 A}$$
$$= \sqrt{\sec^2 A - 1}/\sec A = 1/\csc A.$$

$$\tan A = \sin A/\sqrt{1 - \sin^2 A} = \sqrt{1 - \cos^2 A}/\cos A = 1/\cot A$$
$$= \sqrt{\sec^2 A - 1} = 1/\sqrt{\csc^2 A - 1}.$$

$$\cos A = \sqrt{1 - \sin^2 A} = 1/\sqrt{\tan^2 A + 1} = \cot A/\sqrt{\cot^2 A + 1}$$
$$= 1/\sec A = \sqrt{\csc^2 A - 1}/\csc A.$$

Angles of Any Magnitude

An angle is considered as generated by a GENERATING LINE which first coincides with the INITIAL SIDE of the angle, then revolves about the vertex and finally coincides with the TERMINAL SIDE. An angle generated counterclockwise is POSITIVE; clockwise, NEGATIVE. The generating line may make any number of complete revolutions before coinciding finally with the terminal side.

Quadrants (Fig. 31). Angles between 0° and 90° lie in the first quadrant, between 90° and 180° in second, etc. For *negative* angles, those between 0° and −90° lie in the

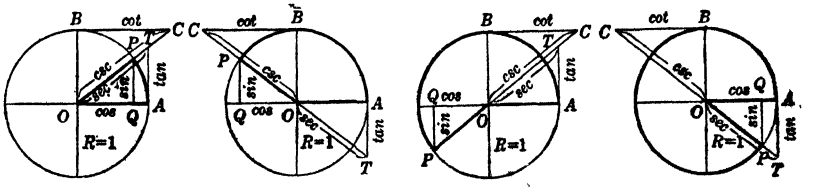

a. First quadrant. *b.* Second quadrant. *c.* Third quadrant. *d.* Fourth quadrant.

FIG. 31. Line definitions of angle functions.

fourth quadrant, between −90° and −180° in third, etc. Addition to or subtraction from an angle of multiples of 360° gives an angle of different magnitude but the same terminal side, hence in the same quadrant.

Line definitions. In Fig. 31, the ratio definitions of the functions of angle AOP are replaced by line definitions as marked, the unit of length being the radius of the circle (UNIT CIRCLE). For an OBTUSE ANGLE (angle between 90° and 180°), the functions are defined for angle AOP as in item *b*. Conventions (in all items) as to positive and negative are: horizontal lines OQ (= cosine) and BC (= cotangent)

to the right of the vertical diameter are positive, to left are negative. Vertical line as PQ (= sine) above horizontal diameter is positive (items *a, b*); below (items *c, d*) is negative. Diagonals, *e.g.*, OC (= cosecant) if extending *along* terminal side OP, are positive; whereas if measured along OP *produced* (*e.g.*, OT, item *b*) they are negative.

Functions of an angle in any quadrant. To write down the numerical values of functions of an angle of any magnitude, express the angle in degrees, and, if necessary, add or subtract multiples of 360° until the magnitude lies between 0° and 360°. Observe in what quadrant the angle lies. If in the first quadrant, the functions are given by Tables 18 and 19, Sec. 22. If in other quadrants, express in one of the forms in column A, Table 7, and read under the desired function the corresponding function of the angle less than 90°, which may then be found from Table 18 or 19, Sec. 22.

Table 7. Functions of an angle from 90° to 360°

A	Sin A	Cos A	Tan A	Cot A	Sec A	Csc A
$90° + x$	$\cos x$	$-\sin x$	$-\cot x$	$-\tan x$	$-\csc x$	$\sec x$
$180° - x$	$\sin x$	$-\cos x$	$-\tan x$	$-\cot x$	$-\sec x$	$\csc x$
$180° + x$	$-\sin x$	$-\cos x$	$\tan x$	$\cot x$	$-\sec x$	$-\csc x$
$270° - y$	$-\cos y$	$-\sin y$	$\cot y$	$\tan y$	$-\csc y$	$-\sec y$
$360° - x$	$-\sin x$	$\cos x$	$-\tan x$	$-\cot x$	$\sec x$	$-\csc x$
$270° + y$	$-\cos y$	$\sin y$	$-\cot y$	$-\tan y$	$\csc y$	$-\sec y$

Examples. Find sin 108°. Write $108° = 90° + 18°$, or $180° - 72°$. Hence $\sin 108° = \cos 18° = \sin 72° = 0.9511$.

To find tan 985° 15′. Reduce to an angle between 0° and 360° by subtracting $2 \times 360°$. $985° 15' - 720° = 265° 15'$, which is an angle in the third quadrant. $265° 15' = 180° + 85° 15' = 270° - (4° 45')$. Tan 265° 15′ = tan 85° 15′ = cot 4° 15′ = 13.46. Hence tan 985° 15′ = 13.46.

To find csc (− 385° 20′). Adding 720°, $720° - 385° 20' = 334° 40'$, which is an angle in the fourth quadrant. $334° 40' = 360° - 25° 20' = 270° + 64° 40'$. Csc 334° 40′ = − csc 25° 20′ = − sec 64° 40′ = − 2.337. Hence csc (− 385° 20′) = − 2.337.

Relations between functions of positive and negative angles which are numerically equal are:

$\sin(-A) = -\sin A$ $\quad \cos(-A) = \cos A$ $\quad \tan(-A) = -\tan A$

$\cot(-A) = -\cot A$ $\quad \sec(-A) = \sec A$ $\quad \csc(-A) = -\csc A$

Angle measurement.

DEGREE MEASURE: The unit, one DEGREE, is the angle at the center of a circle whose intercepted arc equals 1/360th of the circumference.

CIRCULAR MEASURE: The unit is one RADIAN, *i.e.*, the angle at the center of a circle intercepting an arc equal in length to the radius of the circle. For any central angle in a circle, the number of radians in the angle = *length of intercepted arc/length of radius.*

Relation between unit angles. 1 degree = 0.01745 radian = $\pi/180$ radian. 1 radian = 57.2957 degrees = $180/\pi$ degrees. $90° = \pi/2$ radians. $180° = \pi$ radians. $270° = 3\pi/2$ radians. $360° = 2\pi$ radians ($\pi = 3.14159265$). See also Tables 14, 15, 17, Sec. 22.

Angles for which one function has a given value. All angles whose magnitude is expressible as $n \times 180° + (-1)^n \times A$ where n is any integer, positive or negative, and A is expressed in degrees, have the same sine and cosecant as A. (In radians, $\pi n + (-1)^n A$.) If expressible as $n \times 180° + A$, they have the same tangent and cotangent as A. (In radians, $\pi n + A$.) All angles expressible as $n \times 360° \pm A$ have the same secant and cosine as A. (In radians, $\pi n + A$.)

Example. Solve $2 \sin A - \cos A = 0$ for A. Transposing cos A to the right-hand member and dividing both members by cos A gives $2 \sin A/\cos A = 1$, or $\tan A = 1/2$. The value of A between 0° and 90° satisfying this equation is $A = 26° 34'$. (Table 19, Sec. 22.) Hence the solution is: $n \times 180° + 26° 34'$, where n is any integer, positive or negative. Angles between 0° and 360° satisfying the equation are 26° 34′, and 206° 34′ ($n = 1$).

Functions of Multiple Angles

Sin 2A $= 2 \sin A \cos A$.
Cos 2A $= \cos^2 A - \sin^2 A = 1 - 2 \sin^2 A = 2 \cos^2 A - 1$.
Tan 2A $= 2 \tan A/(1 - \tan^2 A)$.
Cot 2A $= (\cot^2 A - 1)/2 \cot A$.
Sin 3A $= 3 \sin A - 4 \sin^3 A$.
Cos 3A $= 4 \cos^3 A - 3 \cos A$.
Tan 3A $= (3 \tan A - \tan^3 A)/(1 - 3 \tan^2 A)$.
Sin 4A $= 4 \sin A \cos A - 8 \sin^3 A \cos A$.
Cos 4A $= 8 \cos^4 A - 8 \cos^2 A + 1$.

$\text{Sin } nA = \sin(n-1)A\cos A + \cos(n-1)A\sin A.$

$\text{Sin } nA = n\cos^{n-1}A\sin A - \binom{n}{3}\cos^{n-3}A\sin^3 A + \binom{n}{5}\cos^{n-5}A\sin^5 A - \text{, etc.}$

$\text{Cos } nA = \cos(n-1)A\cos A - \sin(n-1)A\sin A.$

$\text{Cos } nA = \cos^n A - \binom{n}{2}\cos^{n-2}A\sin^2 A + \binom{n}{4}\cos^{n-4}A\sin^4 A - \text{, etc.}$

Functions of Half Angles

$\text{Sin } \tfrac{1}{2}A = \sqrt{\tfrac{1}{2}(1-\cos A)}.$

$\text{Cos } \tfrac{1}{2}A = \sqrt{\tfrac{1}{2}(1+\cos A)}.$

$\text{Tan } \tfrac{1}{2}A = \sqrt{1-\cos A}/\sqrt{1+\cos A} = \sin A/(1+\cos A) = (1-\cos A)/\sin A.$

Powers in Terms of Multiple Angles

$\text{Sin}^2 A = \tfrac{1}{2}(1-\cos 2A).$
$\text{Cos}^2 A = \tfrac{1}{2}(1+\cos 2A).$
$\text{Sin}^3 A = \tfrac{1}{4}(3\sin A - \sin 3A).$
$\text{Cos}^3 A = \tfrac{1}{4}(\cos 3A + 3\cos A).$

Functions of Sum or Difference of Two Angles

$\text{Sin } (A+B) = \sin A\cos B + \cos A\sin B.$
$\text{Sin } (A-B) = \sin A\cos B - \cos A\sin B.$
$\text{Cos } (A+B) = \cos A\cos B - \sin A\sin B.$
$\text{Cos } (A-B) = \cos A\cos B + \sin A\sin B.$
$\text{Tan } (A+B) = (\tan A + \tan B)/(1-\tan A\tan B).$
$\text{Tan } (A-B) = (\tan A - \tan B)/(1+\tan A\tan B).$
$\text{Cot } (A+B) = (\cot A\cot B - 1)/(\cot A + \cot B).$
$\text{Cot } (A-B) = (\cot A\cot B + 1)/(\cot B - \cot A).$

Sums, Differences, and Products of Functions

$\text{Sin } A + \sin B = 2\sin \tfrac{1}{2}(A+B)\cos \tfrac{1}{2}(A-B).$
$\text{Sin } A - \sin B = 2\cos \tfrac{1}{2}(A+B)\sin \tfrac{1}{2}(A-B).$
$\text{Cos } A + \cos B = 2\cos \tfrac{1}{2}(A+B)\cos \tfrac{1}{2}(A-B).$
$\text{Cos } A - \cos B = -2\sin \tfrac{1}{2}(A+B)\sin \tfrac{1}{2}(A-B).$
$\text{Tan } A + \tan B = \sin(A+B)/\cos A\cos B.$
$\text{Tan } A - \tan B = \sin(A-B)/\cos A\cos B.$
$\text{Sin}^2 A - \sin^2 B = \sin(A+B)\sin(A-B).$
$\text{Cos}^2 A - \cos^2 B = \cos(A+B)\sin(A-B).$
$\text{Cos}^2 A - \sin^2 B = \cos(A+B)\cos(A-B).$
$\text{Sin } A\sin B = \tfrac{1}{2}\cos(A-B) - \tfrac{1}{2}\cos(A+B).$
$\text{Sin } A\cos B = \tfrac{1}{2}\sin(A+B) + \tfrac{1}{2}\sin(A-B).$
$\text{Cos } A\cos B = \tfrac{1}{2}\cos(A+B) + \tfrac{1}{2}\cos(A-B).$

Series

$\text{Sin } x = x - \frac{1}{3!}x^3 + \frac{1}{5!}x^5 - \ldots$ for all values of x in radians.

$\text{Cos } x = 1 - \frac{1}{2!}x^2 + \frac{1}{4!}x^4 - \ldots$ for all values of x in radians.

$\text{Tan } x = x + \frac{1}{3}x^3 + \frac{2}{15}x^5 + \frac{17}{315}x^7 + \cdots - \ldots$ for values of x in radians numerically less than $\tfrac{1}{2}\pi$.

See also Art. 22.

Trigonometric Functions and Exponentials

$$\text{Sin } x = \frac{e^{ix} - e^{-ix}}{2i}. \qquad \text{Cos } x = \frac{e^{ix} + e^{-ix}}{2}. \qquad \text{Tan } x = \frac{e^{ix} - e^{-ix}}{e^{ix} + e^{-ix}}.$$

$$(\text{Cos } x + i\sin x)^n = \cos nx + i\sin nx.$$

See also Art. 10.

Inverse Functions

The equation $\sin 30° = 1/2$ is also written $30° = \sin^{-1} 1/2$. The expression $\sin^{-1} 1/2$ is called INVERSE SINE of $1/2$, or "angle whose sine is $1/2$." Similarly $\cos^{-1} a$, $\tan^{-1} a$, $\sec^{-1} a$, $\csc^{-1} a$, $\cot^{-1} a$ are inverse functions.

$\mathbf{Sin}^{-1} a = \cos^{-1}\sqrt{1-a^2} = \tan^{-1} a/\sqrt{1-a^2} = \cot^{-1}\sqrt{1-a^2}/a = \sec^{-1} 1/\sqrt{1-a^2} = \csc^{-1} 1/a.$

$\mathbf{Tan}^{-1} a = \sin^{-1} a/\sqrt{1+a^2} = \cot^{-1} 1/a = \cos^{-1} 1/\sqrt{1+a^2} = \sec^{-1}\sqrt{1+a^2} = \csc^{-1}\sqrt{1+a^2}/a.$

$\mathbf{Cos}^{-1} a = \sin^{-1}\sqrt{1-a^2} = \tan^{-1}\sqrt{1-a^2}/a = \cot^{-1} a/\sqrt{1-a^2} = \sec^{-1} 1/a = \csc^{-1} 1/\sqrt{1-a^2}.$

$\mathbf{Sin}^{-1} a \pm \sin^{-1} b = \sin^{-1}(a\sqrt{1-b^2} \pm b\sqrt{1-a^2}).$

$\mathbf{Cos}^{-1} a \pm \cos^{-1} b = \cos^{-1}(ab \pm \sqrt{(1-a^2)(1-b^2)}).$

$\mathbf{Tan}^{-1} a \pm \tan^{-1} b = \tan^{-1}[(a \pm b)/(1 \pm ab)].$

16. SOLUTION OF PLANE TRIANGLES

A triangle has six parts, the sides a, b, c and angles A, B, C, angle A being opposite a, etc. Certain necessary relations exist between the parts, as that the sum of the angles $= 180°$, the sum of two sides is greater than the third side, and the greater side is opposite the greater angle. With these restrictions, a triangle can be determined when one side and two other parts are given.

Right Triangles

$\angle A + \angle B = 90°$; $\angle C = 90°$ (Fig. 29).

Given an angle and opposite side, as A, a.

$B = 90° - A.$ $\quad c = a/\sin A.$ $\quad b = a \cot A.$

Given an angle and adjacent side, as A, b.

$B = 90° - A.$ $\quad a = b \tan A.$ $\quad c = b/\cos A = b \sec A.$

Given two sides a, b.

$\tan A = a/b.$ $\quad B = 90° - A.$ $\quad c = \sqrt{a^2+b^2} = a/\sin A = a \csc A.$

Given a side, as a, and hypotenuse c.

$\sin A = a/c.$ $\quad B = 90° - A.$ $\quad b = \sqrt{(c+a)(c-a)}.$

Oblique Triangles

Sides a, b, c, angles A, B, C, angle A opposite side a, etc.

Law of sines: $a/\sin A = b/\sin B = c/\sin C.$ (See also p. 24.)

Law of tangents: $(a+b)/(a-b) = \tan \frac{1}{2}(A+B)/\tan \frac{1}{2}(A-B).$

Law of cosines:

$a^2 = b^2 + c^2 - 2bc \cos A.$ $\quad b^2 = c^2 + a^2 - 2ca \cos B.$

$c^2 = a^2 + b^2 - 2ab \cos C.$ $\quad \cos A = (b^2 + c^2 - a^2)/2bc.$

$\cos B = (c^2 + a^2 - b^2)/2ac.$ $\quad \cos C = (a^2 + b^2 - c^2)/2ab.$

If $s = \frac{1}{2}(a+b+c)$ and $r = \sqrt{(s-a)(s-b)(s-c)/s}$,

$\sin \frac{1}{2}A = \sqrt{(s-b)(s-c)/bc},$ $\quad \cos \frac{1}{2}A = \sqrt{s(s-a)/bc},$

$\tan \frac{1}{2}A = r/(s-a);$

$Area = \sqrt{s(s-a)(s-b)(s-c)} = \frac{1}{2}bc \sin A = \frac{1}{2}a^2 \sin B \sin C/\sin A.$

$\sin A = 2\ area/bc.$ $\quad \sin B = 2\ area/ca.$ $\quad \sin C = 2\ area/bc.$

Sides: $a = b \cos C + c \cos B.$ $\quad b = \cos A + a \cos C.$

$c = a \cos B + b \cos A.$

Sum of sines: $\sin A + \sin B + \sin C = 4 \cos \frac{1}{2}A \cos \frac{1}{2}B \cos \frac{1}{2}C.$

Sum of cosines: $\cos A + \cos B + \cos C = 4 \sin \frac{1}{2}A \sin \frac{1}{2}B \sin \frac{1}{2}C + 1.$

Sum of tangents: $\tan A + \tan B + \tan C = \tan A \tan B \tan C.$

Squares of sines: $\sin^2 A + \sin^2 B + \sin^2 C = 2 \cos A \cos B \cos C + 2.$

Products of cotangents: $\cot A \cot B + \cot B \cot C + \cot C \cot A = 1.$

Sines of twice the angles: $\sin 2A + \sin 2B + \sin 2C = 4 \sin 2A \sin 2B \sin 2C.$

Solutions. If one side and two other parts (sides or angles) of a triangle are known, the preceding equations give a definite solution in all cases but one. Solution simply involves selection of formulas which, with the known data, can be set up as equations with one unknown, and solving. The INDETERMINATE CASE arises when two sides and the angle opposite the shorter are given, *e.g.*, a, b, A (Fig. 32). When $a < b$ and $> b \sin A$, there are two solutions, as indicated. If A is acute and $a < b \sin A$ there is no solution. In all other cases there is one solution only.

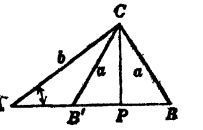

FIG. 32. Indeterminate triangle.

ANALYTIC GEOMETRY

Co-ordinates. For rectangular co-ordinates see Art. 3. OBLIQUE CO-ORDINATES are sometimes used, the axes forming an angle A not equal to 90°. The co-ordinates of a point are the lengths of lines drawn from the point to the axes parallel to respective axes.

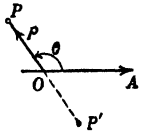

FIG. 33 Polar co-ordinates.

POLAR CO-ORDINATES of a point P in a plane (Fig. 33) are its distance OP from a fixed point O (the POLE), and the angle AOP between OP and a fixed line OA (POLAR AXIS). Distance OP is called the RADIUS VECTOR ρ of P; angle AOP is called the VECTORIAL ANGLE θ, which is positive or negative as in *Trigonometry* (Art. 15). The radius vector is positive when P lies on the terminal side of the vectorial angle, negative when on the terminal side produced through the pole. Equations in polar co-ordinates ρ and θ (POLAR EQUATIONS) are plotted by calculating corresponding values of ρ and θ, plotting the points, and drawing a smooth curve through them.

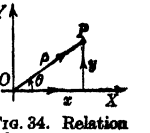

FIG. 34. Relation between rectangular and polar co-ordinates.

Relations between rectangular and polar co-ordinates of a point P (Fig. 34).

$$x = \rho \cos\theta, \quad y = \rho \sin\theta. \qquad \rho = \pm\sqrt{x^2 + y^2}. \qquad \theta = \tan^{-1} y/x.$$

Transformation of rectangular co-ordinates. See Art. 19.

17. FORMULAS USING CO-ORDINATES

Length l of line joining two points.

Rectangular co-ordinates. (x_1, y_1) and (x_2, y_2): $l = \sqrt{(x_1 - x_2)^2 + (y_1 - y_2)^2}$.

Polar co-ordinates. (ρ_1, θ_1) and (ρ_2, θ_2): $l = \sqrt{\rho_1^2 + \rho_2^2 - 2\rho_1\rho_2 \cos(\theta_1 - \theta_2)}$.

Slope (m) of a line, produced, if necessary, to meet X-axis, is the tangent of the angle (INCLINATION, i) measured from the X-axis around to the line in a counterclockwise direction. Thus $m = \tan i$. The slope may have any value, positive or negative. Parallel lines have equal slopes. For two perpendicular lines, the slope of one is the negative reciprocal of the slope of the other. If (x_1, y_1) and (x_2, y_2) are points on a line, the slope is

$$m = (y_1 - y_2)/(x_1 - x_2).$$

Lines parallel to OX have slope zero, those parallel to OY have slope equal to infinity (Table 6).

Point of division. If $P_1(x_1, y_1)$, $P_2(x_2, y_2)$, $P(x, y)$ are three points on a line, then

$$x = (x_1 + rx_2)/(1 + r) \quad \text{and} \quad y = (y_1 + ry_2/(1 + r)$$

where r is numerically equal to the ratio of lengths P_1P and PP_2; r is positive when P is on segment P_1P_2, negative when outside.

Mid-point. Co-ordinates (x, y) of mid-point ($r = 1$) are $\frac{1}{2}(x_1 + x_2)$, $\frac{1}{2}(y_1 + y_2)$.

Area of triangle with vertices (x_1, y_1), (x_2, y_2), (x_3, y_3) is

$$A = \tfrac{1}{2}(x_1y_2 - x_2y_1 + x_2y_3 - x_3y_2 + x_3y_1 - x_1y_3).$$

For any given numerical case write abscissae and ordinates in rows as indicated, repeating the first abscissa and ordinate. (1) Multiply each abscissa by the ordinate in the next column, and add the results. (2) Multiply each ordinate by the abscissa in next column and add results. (3) Subtract the last sum from the first sum and divide by 2.

$$\begin{matrix} x_1 & x_2 & x_3 & x_1 \\ y_1 & y_2 & y_3 & y_1 \end{matrix}$$

By determinants (Art. 4). $A = \frac{1}{2}\begin{vmatrix} x_1 & y_1 & 1 \\ x_2 & y_2 & 1 \\ x_3 & y_3 & 1 \end{vmatrix}$.

Area of any polygon with vertices given may be found in the same manner by writing down the co-ordinates of successive points on the perimeter as in the annexed scheme and following the rule just given.

$$\begin{matrix} x_1 & x_2 & \cdots & x_n & x_1 \\ y_1 & y_2 & \cdots & y_n & y_1 \end{matrix}$$

18. CURVES AND STANDARD EQUATIONS

Locus of an equation in two variables (usually x and y) representing rectangular co-ordinates is a curve (or group of curves) passing through all points whose co-ordinates satisfy that equation, and through such points only.

Symmetry. Curve is symmetric with respect to the X-axis, or to the Y-axis, or to the origin, when the given equality is unaffected by replacing y by $-y$, or x by $-x$, or x and y simultaneously by $-x$ and $-y$, respectively.

Equation of a curve in two variables is that equation satisfied by the co-ordinates of every point on the curve, and such that every point whose co-ordinates satisfy the equation lies on the curve.

Parametric equations of a curve arise when the co-ordinates x and y of a point on the curve are each expressed in terms of a third variable (called PARAMETER). Elimination of parameter gives the rectangular equation.

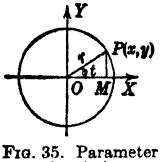

FIG. 35. Parameter of a circle.

Example 1. In the circle of Fig. 35, if $OP = r$, angle $MOP = t$, then $x = OM = r\cos t$, and $y = MP = r\sin t$, are parametric equations of the circle. Squaring and adding gives the rectangular equation $x^2 + y^2 = r^2$.

Example 2. Find the equation of the circle whose center is $C(-1, 2)$ and radius is 4.

Let $P(x, y)$ be any point on the circle (Fig. 36). Then $PC = 4$ by definition. But PC = length of line joining (x, y) and $(-1, 2) = \sqrt{(x+1)^2 + (y-2)^2}$ (Art. 17). Substitute this expression in $PC = 4$ to eliminate PC; square both sides, transpose and reduce. Result is $x^2 + y^2 + 2x - 4y - 11 = 0$, the required equation of the circle.

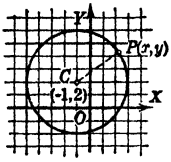

FIG. 36. Circle of known center and radius.

Points of intersection of two curves whose equations are given are those points whose co-ordinates satisfy both equations; they are found by solving the given equations. See Art. 4.

Straight Lines

Notation (Fig. 37). OA = intercept on X-axis = a. OB = intercept on Y-axis = b. ON = perpendicular distance from origin = p. Slope $m = \tan i$ (Art. 17). The angle that ON forms with OX, measured counterclockwise, = n. Let $P(x, y)$ be any point on the line.

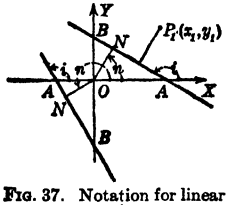

FIG. 37. Notation for linear equations.

Equations:

$y = mx + b$, given m and b.

$x/a + y/b = 1$, given a and b.

$y - y_1 = m(x - x_1)$, given one point (x_1, y_1) and m.

$(y - y_1)/(x - x_1) = (y_1 - y_2)/(x_1 - x_2)$, given two points (x_1, y_1), (x_2, y_2).

$x\cos n + y\sin n = p$, given p and n.

Line parallel to X-axis; $y = b$; parallel to Y-axis, $x = a$. Equation of X-axis, $y = 0$; of Y-axis, $x = 0$.

Polar equations. $P(\rho, \theta)$ any point on line, or circumference.

$\rho = p\cos(\theta - n)$, given n and p. $\rho(A\cos\theta + B\sin\theta) + C = 0$ is a straight line.

$\theta = a$ *constant* is equation of a line through pole.

General equation of first degree in x, y is $Ax + By + C = 0$. The locus is a straight line.

$m = \tan i = -A/B$; $\quad a = -C/A$; $\quad b = -C/B$;

$p = \pm C/\sqrt{A^2 + B^2}$; $\quad n = \sin^{-1} B/\sqrt{A^2 + B^2} = \cos^{-1} A/\sqrt{A^2 + B^2}$.

In equation for p, choose the sign of the radical opposite to the sign of C.

Perpendicular distance d from line $Ax + By + C = 0$ to point $P_1(x_1, y_1)$.

$$d = (Ax_1) + (By_1 + C)/\sqrt{A^2 + B^2}.$$

If $C \neq 0$, and the radical is given the sign opposite to C, d is positive when P_1 and O are on opposite sides of the line, negative when on the same side.

Relations between two lines $A_1x + B_1y + C_1 = 0$ and $A_2x + B_2y + C_2 = 0$. The lines are PARALLEL if $A_1B_2 - A_2B_1 = 0$; they are PERPENDICULAR if $A_1A_2 + B_1B_2 = 0$. The ANGLE BETWEEN the lines $= \tan^{-1}(A_1B_2 - A_2B_1)/(A_1A_2 + B_1B_2)$.

Locus of an equation of higher degree in x and y is a group of straight lines when the equation can be written as the product of real factors of the first degree equal to zero. The locus consists of the lines obtained by setting the factors equal to zero.

Example. Equation $9x^2 - y^2 = 0$ may be written $(3x - y)(3x + y) = 0$. Locus is pair of intersecting lines $3x - y = 0$, $3x + y = 0$.

Circle

Notation. Center $C(a, b)$; radius $= r$; $P(x, y)$ = any point on the circumference.
Equations:

$(x - a)^2 + (y - b)^2 = r^2$, given radius r and center (a, b).
$x^2 + y^2 - 2ax = 0$, center $(a, 0)$ on X-axis; passes through origin.
$x^2 + y^2 - 2by = 0$, center $(0, b)$ on Y-axis; passes through origin.
$x^2 + y^2 = r^2$, center at origin.

$x^2 + y^2 + Dx + Ey + F = 0$ is a circle when $D^2 + E^2 - 4F$ is positive. Center is $(-\frac{1}{2}D, -\frac{1}{2}E)$, radius $= \frac{1}{2}\sqrt{D^2 + E^2 - 4F}$. The locus is a POINT CIRCLE when $r = 0$. The equation has no locus when $D^2 + E^2 - 4F < 0$.

Polar equations: $P(\rho, \theta)$ = any point on circumference.

$\rho = 2r \cos \theta$; center on polar axis, radius r, circle passes through the pole.
$\rho = 2r \sin \theta$; center $(r, 90°)$, radius r, circle passes through pole.
$\rho = r$, center at pole.
$\rho^2 + \rho(D \cos \theta + E \sin \theta) + F = 0$ is a circle.

Parabola

Definitions. A PARABOLA is a curve described by a point moving so that it remains always equidistant from a fixed point (FOCUS) and a fixed line (DIRECTRIX).

Notation (Fig. 38). Focus F, directrix DD', distance from focus to directrix $= p$. The line drawn through the focus perpendicular to the directrix is the AXIS of the curve. The curve is symmetric with respect to its axis. The point on the axis midway between focus and directrix is the VERTEX. The vertex lies on the parabola. The chord drawn through the focus parallel to the directrix is the LATUS RECTUM; length $= 2p$.

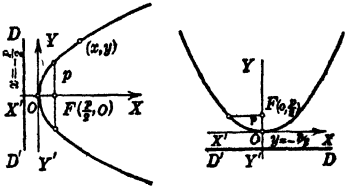

a *b*

FIG. 38. Notation for parabola.

Equations, rectangular. $P(x, y)$ any point on curve.

$y^2 = 2px$; vertex at origin; axis of curve along X-axis; focus $(\frac{1}{2}p, 0)$; equation of directrix $x = -\frac{1}{2}p$. (Fig. 38, item *a*.)

$x^2 = 2py$; vertex at origin; axis of curve along Y-axis; focus $(0, \frac{1}{2}p)$; equation of directrix, $y = -\frac{1}{2}p$. (Fig. 38, item *b*.)

$(y - b)^2 = 2p(x - a)$; vertex (a, b), axis of curve parallel to X-axis.
$(x - a)^2 = 2p(y - b)$; vertex (a, b) axis of curve parallel to Y-axis.

$x^2 + Dx + Ey + F = 0$, E not zero, is a parabola with vertex $(-\frac{1}{2}D, (D^2 - 4F)/4E)$; axis parallel to Y-axis; latus rectum $= -E$.

$y^2 + Dx + Ey + F = 0$, D not zero, is a parabola with vertex $((E^2 - 4F)/4D, -\frac{1}{2}E)$; axis parallel to X-axis, latus rectum $= -D$.

Parabola with axis not parallel to XX' or YY', see Fig. 41, item *d*.

Polar equation. $\rho = p/(1 - \cos \theta)$; pole at focus, polar axis along axis of curve.

Tangent and normal (Fig. 39).

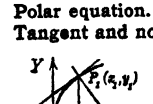

FIG. 39. Parabolic tangent and normal.

$y_1 y = p(x + x_1)$ is the equation of the tangent to $y^2 = 2px$ at $P_1(x_1, y_1)$.

$y_1(x - x_1) + p(y - y_1) = 0$ is the equation of the normal P_1N.

SUBTANGENT $(= MT)$ is bisected at the vertex $(TO = OM)$. SUBNORMAL $(= MN)$ is of constant length $= p$.

A diameter is a line drawn parallel to the axis of a parabola (Fig. 40). The diameter bisects all chords parallel to the tangent at the point where the diameter meets the parabola. The distance of a diameter from the axis $= p/m$ where $m =$ the slope of the

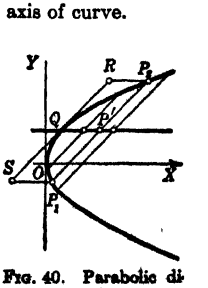

FIG. 40. Parabolic diameter.

chords. The area of the parabolic segment P_1QP_2, cut off by any chord P_1P_2, = 2/3 area of parallelogram P_1P_2RS.

Construction of parabola. Given focus F and directrix DD' (Fig. 41, item *a*). Draw axis MX. Bisect FM, giving vertex V. Through any point A to right of V draw AB parallel to DD'. From F as center with a radius equal to MA strike arcs to intersect AB at P and Q. Then P and Q are points on the curve. Any number of points may be constructed in this manner.

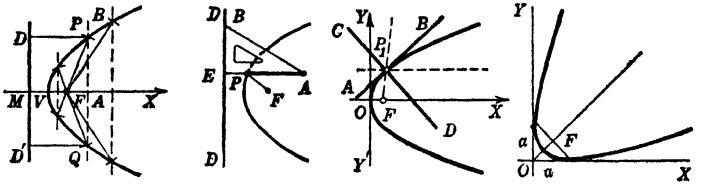

FIG. 41. Parabolic constructions.

Fig. 41, item *b*, shows how to trace a parabola by sliding a triangle ABE along DD; ends of string of length AE are fastened to A on triangle and F on paper; pencil is at P.

To construct a tangent at a given point P_1 (Fig. 39), draw P_1M through P_1 perpendicular to the axis OX, lay off $OT = OM$, draw TP_1, which is the tangent required. Line $y = mx + c$ is a tangent to $y^2 = 2px$ when $c = p/2m$. Two perpendicular tangents intersect on the directrix and the line joining the points of contact passes through the focus. The foot of the perpendicular drawn from the focus upon a tangent lies on the tangent drawn at the vertex. The tangent and normal bisect the angles formed by lines drawn through the point of contact and the focus and through the point of contact parallel to the axis. (Fig. 41, item *c*.) Two parabolas with common focus and axis (CONFOCAL PARABOLAS) and vertices upon opposite sides of the focus intersect at right angles. The equation $y^2 = 2px + p^2$ represents a system of confocal parabolas, p having any constant value. The equation of a parabola referred to the tangents drawn at the extremities of the latus rectum as axes is $\sqrt{x} + \sqrt{y} = \sqrt{a}$, where $a = p\sqrt{2}$. (Fig. 41, item *d*.)

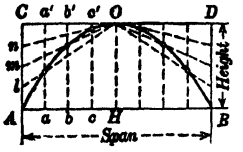

FIG. 42. Parabolic arch.

To construct a parabolic arch with given span ($2a$) and height (h) (Fig. 42). Draw rectangle $ABCD$, divide AC, AH, OC into the same number of equal parts, draw lines aa', bb', cc', On, Om, and Ol. The intersections are points on the arch. With OH as Y-axis, CD as X-axis, the equation of the parabola in Fig. 42 is $x^2 = a^2y/h$.

Ellipse

Definitions. An ellipse is described by a point moving so that the sum of its distances from two fixed points (FOCI) remains constant.

Notation (Fig. 43). Foci F, F'. $PF + PF' = 2a$. $FF' = 2c$. AA' = MAJOR AXIS = $2a$. BB' = MINOR AXIS = $2b$. $a > b$. VERTICES A, A' are the extremities of the major axis. CENTER, O. LATUS RECTUM is the chord drawn through the focus perpendicular to the major axis, length = $2b^2/a$. ECCENTRICITY, $e = c/a$. $e < 1$. Lines DD, $D'D'$, (item *b*) drawn parallel to the minor axis, at distances $\pm a^2/c$ from the center, are DIRECTRICES. $PF = e \times PE$, $PF' = e \times PE'$. An ellipse is also a curve described by a point moving so that the ratio of its distances from a fixed point (focus) and fixed line (directrix) remains constant (eccentricity) and less than unity.

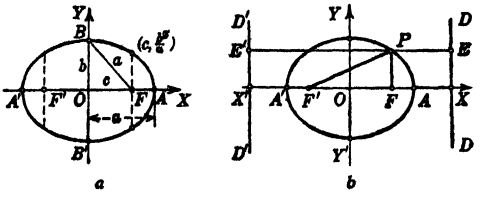

FIG. 43. Notation for ellipse.

Formulas:

$$a^2 = b^2 + c^2. \qquad c = ae. \qquad b^2 = a^2(1 - e^2). \qquad e = \sqrt{1 - b^2/a^2}.$$

Equations:

$x^2/a^2 + y^2/b^2 = 1$ or $y = \pm b\sqrt{a^2 - x^2}/a$; center $(0, 0)$, foci on X-axis, $P(x, y)$ any point on curve.

$(x - h)^2/a^2 + (y - k)^2/b^2 = 1$, center (h, k), major axis parallel to X-axis.

Interchange a and b in the two preceding equations if the major axis is vertical.

$Ax^2 + By^2 + Dx + Ey + F = 0$, A and B positive numbers (not zero), is an ellipse when $R = \frac{1}{4}(D^2/A + E^2/B - 4F) > 0$. Center is $(-D/2A, -E/2B)$; semi-axes $(\sqrt{R/A}, \sqrt{R/B})$; major

axis is parallel to X-axis or Y-axis according as $A < B$ or $A > B$. For $A = B$, locus is a circle. For $R = 0$, locus reduces to point $(-D/2A, -E/2A)$, a POINT-ELLIPSE. The equation has no locus when $R < 0$.

For an ellipse with major axis oblique to the X-axis, see Art. 19.

Parametric equations. $x = a\cos\phi$, $y = b\sin\phi$, where ϕ = ECCENTRIC ANGLE of point $P(x, y)$, $(= \angle XOM$, item $b)$.

Focal radii of $P(x, y$, item $b)$. $F'P = a + ex$, $FP = a - ex$.

Polar equation. $\rho = a(1 - e^2)/(1 - e\cos\theta)$; pole at left-hand focus, polar axis drawn through other focus (Item b). $F'P = \rho$, $\angle OF'P = \theta$.

Tangent and normal to ellipse $b^2x^2 + a^2y^2 = a^2b^2$.

$b^2x_1x + a^2y_1y = a^2b^2$ is the equation of the tangent at (x_1, y_1).

$a^2y_1x - b^2x_1y = (a^2 - b^2)x_1y_1$ is the equation of the normal through (x_1, y_1).

$y = mx + c$ is a tangent when $c = \pm\sqrt{a^2m^2 + b^2}$.

Diameter is a line drawn through the center. Tangents drawn at the extremities of a diameter are parallel. All chords parallel to these tangents are bisected by the diameter. In Fig. 44, AB and CD are CONJUGATE DIAMETERS, each being parallel to chords bisected by the other. If m, m' are slopes of the conjugate diameters, $mm' = -b^2/a^2$. The area of the circumscribed parallelogram $MNQP$ formed by tangents drawn at the extremities of conjugate diameters equals $4ab$. If $2a'$, $2b'$, are the lengths of AB, CD, then $a'^2 + b'^2 = a^2 + b^2$.

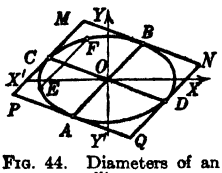

FIG. 44. Diameters of an ellipse.

Radii of curvature (Art. 21) for points A, B at extremities of the axes are determined (Fig. 45) by drawing a line from vertex D of the rectangle $ADBC$ perpendicular to the chord AB. Then M, N are centers of curvature for A, B, respectively, and AM, BN are radii of curvature. $AM = b^2/a$, $BN = a^2/b$.

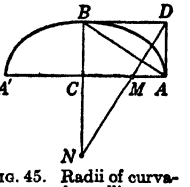

FIG. 45. Radii of curvature of an ellipse.

Construction of ellipse. When the major and minor axes AA', BB' are given, draw circles upon those lines as diameters (Fig. 46, item a) and from any point M on the larger circle draw radius OM, and draw SP and MR parallel to OA and OB, respectively, to intersect at P, on the ellipse. An ellipse is a flattened circle, in the sense that the ordinates of the large circle are reduced in the ratio $b : a$ to the given ordinates of the ellipse.

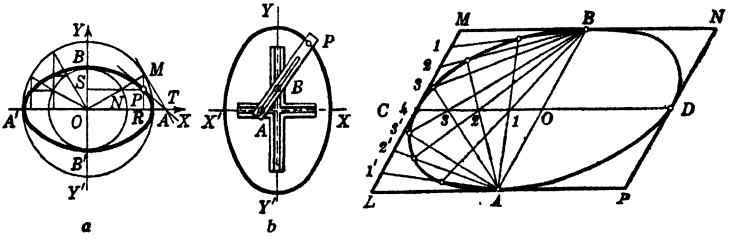

FIG. 46. Constructions of ellipses.

Mechanical construction. Fig. 46, item b, shows an instrument for drawing ellipses. A, B are adjustable nuts on the cross bar PAB. These slide in perpendicular grooves XX', YY'. When the cross bar is moved, P traces an ellipse with semi-axes AP, BP.

To construct an ellipse, given a pair of conjugate diameters AB, CD (Fig. 46, item c). Draw the parallelogram $LMNP$, divide MC and OC into the same number of equal parts, draw lines from B and A, through like-numbered points. These lines intersect on the ellipse.

Approximate construction of ellipse by circular arcs. *With four centers* (Fig. 47, item a):

Lay off $CF = OB - OC$, bisect BF at S, and draw SH perpendicular to BC. Set off $OG' = OG$ and $OH' = OH$. Then the four centers are G, H, G', H', and the radii are GB, HC, $G'A$, $H'D$.

With eight centers (Fig. 47, item b): $OB = a$, $OC = b$. Draw EGH perpendicular to AC. Then G, H are centers with radii GA, HC (radii of curvature at A and C). Produce EC to E' making $CE' = OC$. Upon EE' as a diameter draw a circle cutting CD at M. Then $CM = \sqrt{ab}$, and is the third radius. (See Fig. 9, item 4.) Lay off $AN =$

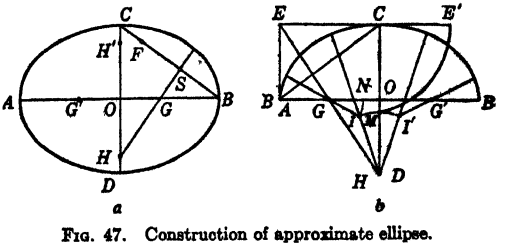

FIG. 47. Construction of approximate ellipse.

CM, and from G, H strike arcs with radii GN, HM, intersecting at I, the third center for the elliptic arc from A to C. Eight centers are necessary to complete the ellipse. Radius $AG = b^2/a$, $HC = a^2/b$, and the third radius CM is the mean proportional between AG and HC.

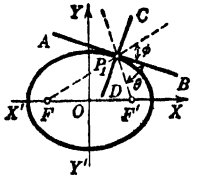

FIG. 48. Tangent and normal to ellipse.

To construct a tangent at P (Fig. 46, item a) extend ordinate RP to meet the outer circle at M and draw tangent MT; then TP is tangent to the ellipse. Two perpendicular tangents intersect on the circle $x^2 + y^2 = a^2 + b^2$ (DIRECTOR CIRCLE). The foot of the perpendicular from the focus to a tangent lies on the circle $x^2 + y^2 = a^2$. The tangent and normal bisect angles formed by focal radii through the point of contact (Fig. 48).

To draw tangents from an external point P (Fig. 49). Draw secants PQR, PST; chords QT, RS, intersecting at L, and secants QS, RT, intersecting at M. Then LM intersects the ellipse in points of contact A, B.

To construct an elliptic arch of given height (h) **and span** ($2s$) **with axes in a given ratio** (m) (Fig. 50). $GH = mh$, DF is diameter of the circle drawn through H. Lines BG, BC, DF are divided into the same number of equal parts and lines drawn to intersect on the ellipse as shown. Axes are $h + s^2/m^2h$ (along CD produced) and $mh + s^2/mh$.

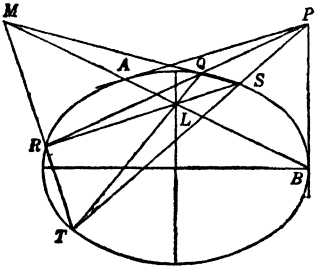

FIG. 49. Tangent from external point.

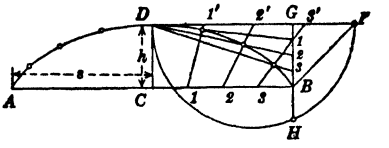

FIG. 50. Construction of elliptic arch.

Hyperbola

Definitions. A hyperbola is traced by a point moving so that the difference of its distances from two fixed points (FOCI) remains constant.

Notation (Fig. 51). Foci F, F'. $FF' = 2c$. $PF' - PF = 2a$. AA' = TRANSVERSE AXIS $= 2a$. BB' = CONJUGATE AXIS $= 2b$. VERTICES are A, A'. CENTER, is O. LATUS RECTUM is a chord drawn through the focus perpendicular to the transverse axis produced; length $= 2b^2/a$. ECCENTRICITY $e = c/a$. $e > 1$. Lines DD, $D'D'$ (Fig. 51, item c) drawn parallel to the conjugate axis at distances

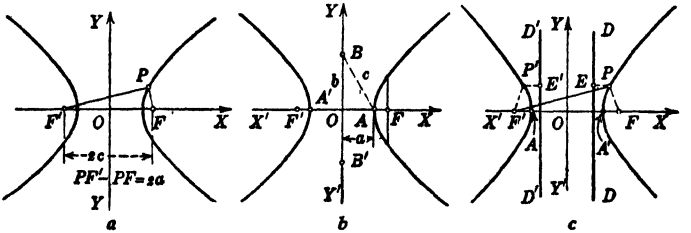

FIG. 51. Notation for hyperbola.

$\pm a^2/c$ from the center are DIRECTRICES. $PF = e \times PE$, $P'F' = e \times P'E'$. The hyperbola is also traced by a point so moving that the ratio of its distances from a fixed point (FOCUS) and fixed line (DIRECTRIX) remain constant (ECCENTRICITY) and greater than unity.

Formulas.

$$c^2 = a^2 + b^2. \qquad c = ae. \qquad b^2 = a^2(e^2 - 1). \qquad e = \sqrt{1 + b^2/a^2}.$$

Equations:

$x^2/a^2 - y^2/b^2 = 1$ or $y = \pm b\sqrt{x^2 - a^2}/a$; center $(0, 0)$; foci on X-axis, $P(x, y)$ any point on curve.

$(x - h)^2/a^2 - (y - k)^2/b^2 = 1$, center (h, k), traverse axis parallel to X-axis.

If the transverse axis is vertical, interchange x and y, and h and k, in the two preceding equations. $Ax^2 - By^2 + Dx + Ey + F = 0$, A and B positive numbers (not zero), is a hyperbola when $R = 1/4\,(D^2/A - E^2/B - 4F)$ is not zero. Center is $(-D/2A, E/2B)$; semi-axes $\sqrt{|R/A|}$, $\sqrt{|R/B|}$

(absolute values); transverse axis is parallel to X-axis or Y-axis according as $R > 0$ or < 0. When $A = B$, the locus is a rectangular hyperbola. If $R = 0$, the locus is a pair of lines intersecting at $(-D/2A, E/2B)$, with slopes $\pm\sqrt{A/B}$.

$2Cxy + Dx + Ey + F = 0$, C not zero, is a rectangular hyperbola when $R = 1/4\,(DE - CF)/C^2$ is not zero. Center is $(-E/2C, -D/2C)$; $a^2 = |R|$; asymptotes are parallel to OX, OY. When $R = 0$, the locus is a pair of lines $x + E/2C = 0$, $y + D/2C = 0$. See also Art. 19.

Parametric equations. $x = a \cosh u$, $y = b \sinh u$. (For the meaning of u, see Art. 13.)

Focal radii of P are $F'P = ex + a$; $FP = ex - a$ (Fig. 51, item *a*).

Polar equation, $\rho = a(e^2 - 1)/(e \cos \theta - 1)$; pole at left-hand focus, polar axis drawn through other focus (Fig. 51, item *a*). $F'P = \rho$, $\angle XF'P = \theta$.

Conjugate hyperbolas have the property that the transverse and conjugate axes of one are respectively the conjugate and transverse axes of the others (Fig. 52). The equations differ only in the sign of the constant term and are $x^2/a^2 - y^2/b^2 = \pm 1$.

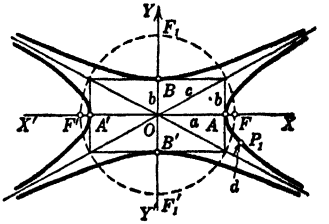

Fig. 52. Conjugate hyperbolas.

Asymptotes of $x^2/a^2 - y^2/b^2 = 1$ are the lines $x/a - y/b = 0$; $x/a + y/b = 0$. Conjugate hyperbolas have the same asymptotes. The diagonals of the rectangle in Fig. 52 lie on the asymptotes. The branches of the hyperbola approach infinitely near its asymptotes as they recede to infinity.

Rectangular hyperbola has equal axes ($a = b$), and asymptotes perpendicular. $e = \sqrt{2}$. The equation is, $x^2 - y^2 = a^2$; foci $(\pm a\sqrt{2}, 0)$. The equation referred to the asymptotes as axes is $2xy = \pm a^2$. A rectangular hyperbola is also called an EQUILATERAL HYPERBOLA.

Tangent and normal to $b^2x^2 - a^2y^2 = a^2b^2$.

$b^2x_1x - a^2y_1y = a^2b^2$, is the equation of the tangent at (x_1, y_1).

$a^2y_1x - b^2x_1y = (a^2 - b^2)x_1y_1$, is the normal through (x_1, y_1).

$y = mx + c$ is a tangent when $c = \pm\sqrt{a^2m^2 - b^2}$.

Diameter is a line drawn through the center, and intersects the hyperbola or conjugate hyperbola (asymptotes excluded). The tangents drawn at the extremities of a diameter are parallel. All chords parallel to these tangents terminating in a conjugate hyperbola are bisected by the diameter. In Fig. 53, AB, CD are conjugate diameters, each bisects chords parallel to the other. Product of slopes $= b^2/a^2$. The area of the parallelogram formed by tangents at A, B, C, $D = 4ab$. The vertices are on the asymptotes. $\overline{OB}^2 + \overline{OC}^2 = a^2 + b^2$.

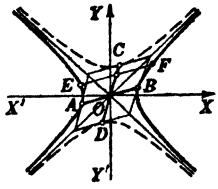

Fig. 53. Conjugate diameters.

Confocal ellipses and hyperbolas. An ellipse and a hyperbola with common foci intersect at right angles. The equation $x^2/(a^2 + k) + y^2/(b^2 + k) = 1$, for values of $k > -a^2$, represents a system of curves composed of confocal ellipses and hyperbolas. (Fig. 54; $a = 5$, $b = 3$.)

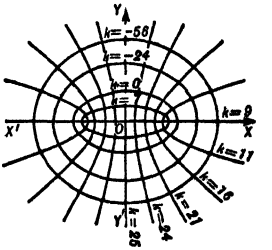

Fig. 54. Confocal ellipses and hyperbolas.

Construction of hyperbola. When foci F, F_1, and transverse axis AB are given, points on the curve may be constructed as in Fig. 55, item *a*. $FR = FJ$ = any radius $> AB$. $JE = AB$. $F_1R = FE = FJ - AB$.

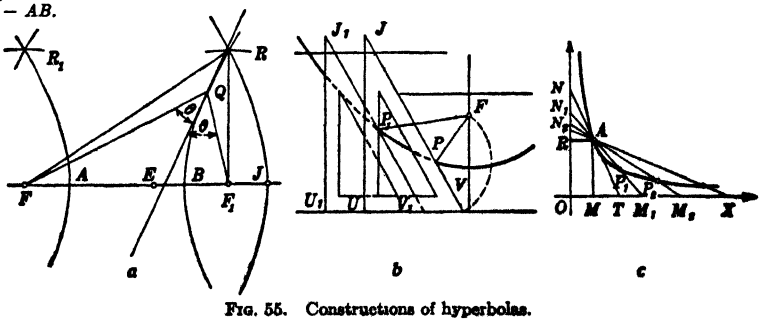

Fig. 55. Constructions of hyperbolas.

Mechanical construction. In Fig. 55, item b, focus and directrix are given. Triangle JUV is moved along the ruler edge (directrix), one end of a string of length JV is fastened at J, the other end at F (focus), and kept taut by a pencil point at P. $PF = PV$. Distance from P to the ruler $= PV \sin \angle UVJ = PF \sin \angle UVJ$. Hence eccentricity $= \csc \angle UVJ$.

When asymptotes OX, OY and one point A on the curve are given, construction is shown in Fig. 55, item c (which is drawn for a rectangular hyperbola): $AN_2 = M_2P_2$; $AN_1 = M_1P_1$, etc.

To construct a tangent at Q (Fig. 55, item a), draw FQ, F_1Q, and construct the bisector of the angle FQF_1. This is the desired tangent. Two perpendicular tangents intersect on the circle $x^2 + y^2 = a^2 - b^2$. (Impossible when $a < b$.) The foot of the perpendicular from the focus upon a tangent lies on circle $x^2 + y^2 = a^2$. Tangent and normal bisect angles formed by the focal radii through the point of contact. The portion of a tangent lying between its intersection with asymptotes is bisected at the point of contact, and forms with the asymptotes a triangle of constant area ab. Hence to draw a tangent at A (Fig. 55, item c) when the asymptotes are given, draw AM, AR, each parallel to an asymptote. Lay off $MT = OM$, $RN = OR$, and draw NT. This is the tangent required.

19. LOCUS PROBLEMS AND PARAMETRIC EQUATIONS

Transformation of rectangular co-ordinates. New axes of co-ordinates $O'X'$, $O'Y'$ are drawn through a new origin $O'(h, k)$. Co-ordinates of any point P are (x, y) referred to old axes and (x', y') referred to the new axes.

Translation. If the new axes are parallel to the original axes, $x = x' + h$; $y = y' + k$.

Translation and rotation. If the new axis $O'X'$ makes an angle θ with the original X-axis, $x = x' \cos \theta - y' \sin \theta + h$; $y = x' \sin \theta + y' \cos \theta + k$.

By these formulas a given equation can be transformed so that the new axes of co-ordinates assume any desired position. By suitable choice of h, k, and θ, reductions of equations to simpler forms may often be effected (see *post*).

General equation of the second degree; locus of $Ax^2 + 2Bxy + Cy^2 + 2Dx + 2Ey + F = 0$. By rotation of the axes of co-ordinates through the angle $\theta = \frac{1}{2} \tan^{-1} 2B/(A - C)$, the equation will assume a form in which the xy-term is lacking. Hence the locus comes under the cases already discussed. Tests are given in Table 8, excluding the case of no locus.

Table 8. Tests for curve of general equation of second degree

Test	General case	Exceptional case
$B^2 - AC = 0$	Parabola	Two parallel lines; one line
$B^2 - AC < 0$	Ellipse	Point ellipse
$B^2 - AC > 0$	Hyperbola	Two intersecting lines

Conic section is traced by a point moving so that the ratio (ECCENTRICITY) of its distance from a fixed point (FOCUS) and a fixed line (DIRECTRIX) is constant. POLAR EQUATION is $\rho = ep/(1 - e \cos \theta)$, pole at focus, polar axis perpendicular to directrix, distance of focus from directrix $= p$, eccentricity $= e$. A conic section is a parabola, ellipse, or hyperbola according as $e = 1$, $e < 1$, or $e > 1$. Plane sections of a right circular conical surface are conic sections, a parabola when the plane is parallel to an element, an ellipse when the plane cuts all elements, a hyperbola in other cases.

Parametric equations. It is often easier to express the rectangular co-ordinates x, y of a moving point P in terms of a parameter (parametric equations of the locus of P, Art. 18) than to derive the rectangular equation directly. Study of the problem will determine the choice of parameter.

Example. A rigid isosceles right-triangular frame moves so that the extremities of one side move on perpendicular lines. Find the curve traced by the third vertex.

Solution. In Fig. 56, choose $\angle ABO = \theta$ for a parameter. The side AB of the triangle $= a$. Then $x = OB + BM = AB \cos \theta + BP \cos (90° - \theta)$, $y = MP = BP \sin (90° - \theta)$. Hence $x = a (\cos \theta + \sin \theta)$, $y = a \cos \theta$. The rectangular equation is $x^2 - 2xy + 2y^2 = a^2$, and the locus is an ellipse. (See Table 8.)

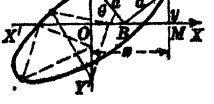

FIG. 56. Parametric construction of an ellipse.

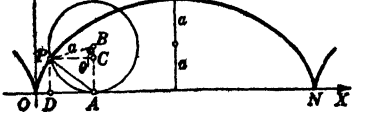

FIG. 57. Cycloid.

Cycloid is traced by a point P on the circumference of a circle which rolls without slipping on a straight line. Parametric equations (Fig. 57) are $x = a(\theta - \sin \theta)$, $y = a(1 - \cos \theta)$, θ in radians; **rectangular equation is** $x = a \operatorname{vers}^{-1} y/a - \sqrt{2ay - y^2}$.

Construction (Fig. 58) makes $M_1D_1 = CC_1$, $M_2D_2 = CC_2$, $M_3D_3 = CC_3$, etc. NORMAL at P passes through A (Fig. 57). A point Q on the radius BP, or the radius produced, describes a PROLATE CYCLOID if Q is inside of the rolling circle and a CURTATE CYCLOID if Q is outside. The equations of such a cycloid are $x = a\theta - b \sin \theta$, $y = a - b \cos \theta$ when $b = BQ$.

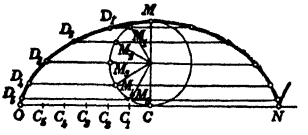

FIG. 58. Construction of cycloid.

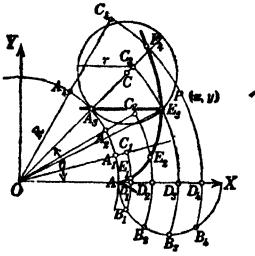

FIG. 59. Epicycloid.

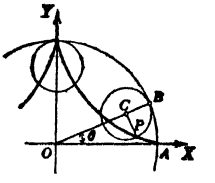

FIG. 60. Hypocycloid.

Epicycloid (or **hypocycloid**) is traced by a point on the circumference of a circle which rolls without slipping on the outside (or inside) of a fixed circle. If radius of fixed circle $= R$, radius of rolling circle $= r$, parametric equations are: EPICYCLOID (Fig. 59).

$$x = (R + r) \cos \theta - r \cos (\theta + R\theta/r),$$
$$y = (R + r) \sin \theta - r \sin (\theta + R\theta/r).$$

HYPOCYCLOID (Fig. 60) is the same, with the sign of r changed. Parameter θ = the angle described by the line of centers measured from a position when the tracing point is on the fixed circle. The normal to the curve for any position of the tracing point passes through the point of contact of the circles. (E_3A_3, Fig. 59.)

Construction of epicycloid (Fig. 59). Arcs AA_1, AA_2, etc., on the fixed circle equal arcs AB_1, AB_2, etc., on the rolling circle. Arcs B_1C_1, B_2C_2, etc., are drawn with O as center and $D_1B_1 = C_1E_1$, $D_2B_2 = C_2E_2$, etc. A similar construction holds for the hypocycloid.

Epitrochoid (or **Hypotrochoid**) is the curve traced by a point (Fig. 59 or 60) on the radius of the rolling circle at a fixed distance b from its center. The parametric equations of the curve are

$$x = (R + r) \cos \theta - b \cos (\theta + R\theta/r),$$
$$y = (R + r) \sin \theta - b \sin (\theta + R\theta/r).$$

For a hypotrochoid, change signs of r and b. If $R = 2r$, the hypocycloid is a diameter of the fixed circle, and the hypotrochoid is an ellipse. If $R = 4r$, the hypocycloid has four cusps and is called the ASTROID (Fig. 61). Its rectangular equation is $x^{2/3} + y^{2/3} = R^{2/3}$. If $R = 2r$, the epicycloid is the CARDIOID. (Fig. 62.) When each chord drawn

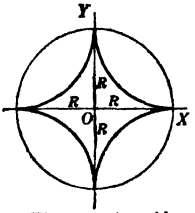

Fig. 61. Astroid.

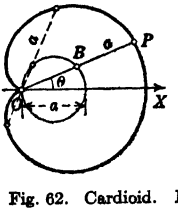

Fig. 62. Cardioid.

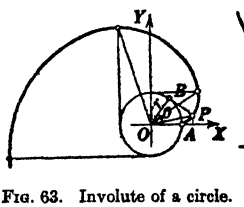

FIG. 63. Involute of a circle.

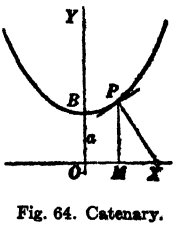

Fig. 64. Catenary.

from a fixed point of a circle is produced a distance equal to the diameter, the extremities will lie on a cardioid. Polar equation of the cardioid is $\rho = a(1 + \cos \theta)$; rectangular equation is $(x^2 + y^2 - ax)^2 = a^2(x^2 + y^2)$.

Involute of a circle (Fig. 63) is traced by the end of a taut string wrapped around a fixed circle and unwinding. Parametric equations are

$$x = r \cos \theta + r\theta \sin \theta; \qquad y = r \sin \theta - r\theta \cos \theta \quad (\theta \text{ in radians}).$$

At any instant the portion of string unwound (as BP) is normal to the involute and tangent to the circle, and $BP = arc\ AB$.

Catenary (Fig. 64) is the curve assumed by a flexible cord of uniform density when suspended at its extremities. Its equation is $y = a \cosh (x/a)$. (Table 27, Sec. 22.) The constant a equals the ratio of the horizontal component of tension in the cord to the

weight of cord per unit length. The length of the normal drawn from $p(x, y)$ on the curve and intercepted by $OX = y^2/a$.

Spiral of Archimedes (Fig. 65) is traced by a point moving with constant speed v on a line which turns about a fixed point on itself with uniform angular velocity w. Polar equation is $\rho = a\theta$ (θ in radians), where $a = v/w$, w being expressed in radians per sec., or $\rho = b\theta/360°$ (θ in degrees, $b = 2\pi a$).

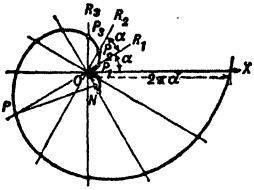

FIG. 65. Spiral of Archimedes.

Construction. Draw radial lines OR_1, OR_2, OR_3, etc., forming angles α, 2α, 3α, etc., with OX; lay off $OP_1 = a\alpha$ (α in radians) = $b\alpha/360$ (α in degrees), $OP_2 = 2OP_1$, $OP_3 = 3OP_1$, etc. Consecutive coils of the spiral intercept equal lengths ($2\pi a$) on any radius. The normal at any point P cuts off a constant distance a from O on a line ON drawn perpendicular to OP.

Logarithmic spiral (Fig. 66) is a curve cutting all radii drawn to it from a fixed point at the same angle. The polar equation is $\rho = be^{a\theta}$ (θ in radians). The cotangent of the angle between radius OP_1 and the tangent at P_1 equals a. The radius equals b when $\theta = 0$. If P_1 and P_2 are points on the curve, and angle P_1OP_2 is bisected and OP_3 is laid off on this bisector equal to the mean proportional between OP_1 and OP_2 ($OP_3 = \sqrt{OP_1 \cdot OP_2}$), then P_3 is on the curve. For negative values of θ increasing numerically, the spiral winds about O with decreasing radius.

To construct a normal at P, lay off on OP from P a length equal to 1, at this point erect a perpendicular to OP of length a, then the normal passes through the end of this perpendicular.

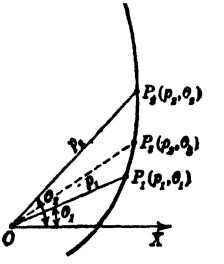

FIG. 66. Logarithmic spiral.

A helix is the path of a point which moves on a right circular cylinder of radius r at constant speed v parallel to the axis and at the same time rotates about the axis with uniform angular velocity w (radians per sec.). The curve cuts all elements at an angle A whose tangent equals rw/v. Consecutive coils intercept equal lengths h ($= 2\pi r \cot A$) on an element. The length of a helix for one complete turn equals $2\pi r/\sin A$. The curve formed by a screw thread is a helix, and h = the pitch of the thread.

CALCULUS

Definitions. When two variables x and y are so related that the value of y depends on the value of x, then y is said to be a FUNCTION of x, written $y = f(x)$. x is the INDEPENDENT VARIABLE, y the DEPENDENT variable. If $x = x_0$ gives a corresponding value of $y = y_0$, then $y_0 = f(x_0)$. A mathematical expression containing a variable is a FUNCTION of this variable.

From $y = \log_e x$, it follows that $x = e^y$ (Art. 5). Functions $\log_e x$ and e^y are called INVERSE FUNCTIONS.

An INCREMENT of a variable is an increase (+) or a decrease (−) in its value. Increment of x is denoted by Δx, of y by Δy; etc. When values of the independent variable (x) and its increment (Δx) are given, the increment of dependent variable $y = f(x)$ is $\Delta y = f(x + \Delta x) - f(x)$; that is, Δy is the difference of the values of the function for the two values ($x + \Delta x$ and x) of the independent variable.

Example. If $y = 2 \sin x$, the increment of y when $x = 30°$ and $\Delta x = 2°$ is $\Delta y = 2 \sin 32° - 2 \sin 30° = 2(0.5299 - 0.5000) = 0.060$.

The RATIO OF CORRESPONDING INCREMENTS $\Delta y/\Delta x$ is the slope of the secant drawn through points on the graph of the function with co-ordinates (x, y) $(x + \Delta x, y + \Delta y)$. Thus, in Fig. 67, $\Delta y/\Delta x = RQ/PR = \tan \angle RPQ$ = the slope of the secant line PS through $P(x, y)$ and $Q(x + \Delta x, y + \Delta y)$.

20. DERIVATIVES

Derivative of a function (dy/dx) is obtained by calculating the ratio of corresponding increments of the function and the independent variable and finding the LIMITING VALUE

of this ratio when the increment of the independent variable decreases numerically and becomes zero.

Slope of tangent at a point on the graph of $y = f(x)$ is given immediately by the derivative of the function; that is, the value of the derivative for a given value of x equals the tangent of the angle formed with the X-axis by the line drawn tangent to the graph at the corresponding point.

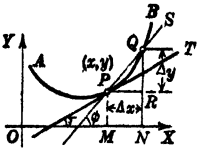

FIG. 67. Ratio of corresponding increments.

In Fig. 67 when $\Delta x = 0$, the point Q takes successive positions on the arc PQ nearer P, the secant PS turns about P, and, eventually, when Δx becomes zero, secant PS becomes tangent to the graph at P, its slope becoming, in the limit, the slope of PT.

Table 9. Derivatives

[c, n are constants, e the Napierian base (Art. 5), and u, v, w are functions of x.]

(1) $\dfrac{dc}{dx} = 0.$

(2) $\dfrac{dx}{dx} = 1.$

(3) $\dfrac{d}{dx}(u + v - w) = \dfrac{du}{dx} + \dfrac{dv}{dx} - \dfrac{dw}{dx}.$

(4) $\dfrac{d}{dx}(cv) = c\dfrac{dv}{dx}.$

(5) $\dfrac{d}{dx}(uv) = u\dfrac{dv}{dx} + v\dfrac{du}{dx}.$

(6) $\dfrac{d}{dx}(v)^n = n(v)^{n-1}\dfrac{dv}{dx}.$

(7) $\dfrac{d}{dx}\left(\dfrac{u}{v}\right) = \dfrac{1}{v^2}\left(v\dfrac{du}{dx} - u\dfrac{dv}{dx}\right).$

(8) $\dfrac{d}{dx}\log_e v = \dfrac{1}{v}\dfrac{dv}{dx}.$

(9) $\dfrac{d}{dx}\log_{10} v = \dfrac{\log_{10} e}{v}\dfrac{dv}{dx}.$

(10) $\dfrac{d}{dx}e^v = e^v\dfrac{dv}{dx}.$

(11) $\dfrac{d}{dx}c^v = c^v \log_e c\dfrac{dv}{dx}.$

(12)* $\dfrac{d}{dx}\sin v = \cos v\dfrac{dv}{dx}.$

(13)* $\dfrac{d}{dx}\cos v = -\sin v\dfrac{dv}{dx}.$

(14)* $\dfrac{d}{dx}\tan v = \sec^2 v\dfrac{dv}{dx}.$

(15)* $\dfrac{d}{dx}\cot v = -\csc^2 v\dfrac{dv}{dx}.$

(16)* $\dfrac{d}{dx}\sec v = \sec v\tan v\dfrac{dv}{dx}.$

(17)* $\dfrac{d}{dx}\csc v = -\csc v\cot v\dfrac{dv}{dx}.$

(18) $\dfrac{d}{dx}\sin^{-1} v = \dfrac{1}{\sqrt{1 - v^2}}\dfrac{dv}{dx}.$

(19) $\dfrac{d}{dx}\cos^{-1} v = -\dfrac{1}{\sqrt{1 - v^2}}\dfrac{dv}{dx}.$

(20) $\dfrac{d}{dx}\tan^{-1} v = \dfrac{1}{1 + v^2}\dfrac{dv}{dx}.$

(21) $\dfrac{d}{dx}\cot^{-1} v = -\dfrac{1}{1 + v^2}\dfrac{dv}{dx}.$

(22) $\dfrac{d}{dx}\sec^{-1} v = \dfrac{1}{v\sqrt{v^2 - 1}}\dfrac{dv}{dx}.$

(23) $\dfrac{d}{dx}\csc^{-1} v = -\dfrac{1}{v\sqrt{v^2 - 1}}\dfrac{dv}{dx}.$

(24) $\dfrac{d}{dx}\sinh v = \cosh v\dfrac{dv}{dx}.$

(25) $\dfrac{d}{dx}\cosh v = \sinh v\dfrac{dv}{dx}.$

(26) $\dfrac{d}{dx}\tanh v = \operatorname{sech}^2 v\dfrac{dv}{dx}.$

(27) $\dfrac{d}{dx}\coth^2 v = -\operatorname{csch}^2 v\dfrac{dv}{dx}.$

(28) $\dfrac{d}{dx}\operatorname{sech} v = -\operatorname{sech} v\tanh v\dfrac{dv}{dx}.$

(29) $\dfrac{d}{dx}\operatorname{csch} v = -\operatorname{csch} v\coth v\dfrac{dv}{dx}.$

(30) $\dfrac{d}{dx}\sinh^{-1} v = \dfrac{1}{\sqrt{v^2 + 1}}\dfrac{dv}{dx}.$

(31) $\dfrac{d}{dx}\cosh^{-1} v = \dfrac{1}{\sqrt{v^2 - 1}}\dfrac{dv}{dx}.$

(32) $\dfrac{dv}{dx} = \dfrac{dv}{dt}\cdot\dfrac{dt}{dx}.$

(33) $\dfrac{dv}{dx} = 1\Big/\dfrac{dx}{dv}.$

* In 12–17, v must be measured in radians.

Differentiation of a function is accomplished by applying in succession formulas from Table 9.

Examples. (1) Find $\dfrac{d}{dx}3\sqrt{9 + x^2}$. Apply (4) with $c = 3$, $v = \sqrt{9 + x^2}$; the result is $3\dfrac{d}{dx}\sqrt{9 + x^2}$. Change the square root to the power $1/2$ and apply (6) with $v = 9 + x^2$, $n = 1/2$. This gives $3 \times$

$\frac{1}{2}(9+x^2)^{-\frac{1}{2}}\frac{d}{dx}(9+x^2)$. Now apply (3). $\frac{d}{dx}(9+x^2)=\frac{d}{dx}9+\frac{d}{dx}x^2$. By (1) $\frac{d}{dx}9=0$, and by (6) and (2) $\frac{d}{dx}x^2=2x$. The final result is $3x(9+x^2)^{-\frac{1}{2}}$, or $3x/\sqrt{9+x^2}$.

(2) Find $\frac{d}{dx}(25\cos x-12.8\cot x)$. Applying (3), $\frac{d}{dx}(25\cos x)-\frac{d}{dx}(12.8\cot x)$. Apply (5) in each term and then (13) and (15). The result is $-25\sin x+12.8\csc^2 x$.

Logarithmic differentiation is a method under which the derivative of the Nap log of a function is worked out and this result multiplied by the function, the final product being the derivative of the latter.

Example. Find $\frac{d}{dx}\frac{x}{\sqrt{9-x^2}}$. $\operatorname{Log}_e\frac{x}{\sqrt{9-x^2}}=\log_e x-\frac{1}{2}\log_e(9-x^2)$ (see Art. 1). Differentiating this by (3), (4), (8), successively, the result is $\frac{1}{x}+\frac{x}{9-x^2}=\frac{9}{x(9-x^2)}$. Multiplying this by $\frac{x}{\sqrt{9-x^2}}$, the product is $9/(9-x^2)^{\frac{3}{2}}$.

21. APPLICATIONS OF DIFFERENTIAL CALCULUS

Maximum and minimum values of a function. In Fig. 68, which is a graph of $f(x)$, the value of $f(x)$ for $x=OM$ is MA; this value of $f(x)$ is a MAXIMUM, *i.e.*, greater than the values of the function immediately preceding or following it. Similarly, the function has a MINIMUM ($=NB$) when $x=ON$. The slope of the graph is zero at A and also at B (horizontal tangents). Passing along the graph through A from left to right, the slope changes sign from + to −, whereas at B, the slope changes sign from − to +. Hence $f(x)$ is a maximum for $x=a$ when its derivative vanishes for $x=a$ and changes sign from + to − as x increases through a; $f(x)$ is a minimum for $x=a$ when its derivative vanishes for $x=a$ and changes sign from − to + as x increases through a.

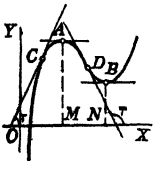

FIG. 68. Maximum and minimum.

To examine a function for maximum or minimum values, find its derivative, set it equal to zero, and solve this equation for values (CRITICAL VALUES) of the variable. Consider one critical value at a time and determine the sign of the derivative, first for a value of the variable a trifle less than the critical value, and second for a value a trifle greater. Change in sign from + to − shows a maximum value of the function for the particular critical value, of − to +, a minimum value.

In many problems the function to be examined must be derived, and it is often advisable to graph this function. The conditions of the problem usually determine without testing whether the function is a maximum or a minimum.

Examples. (1) An opening is to be dug from a point A to a point B, 300 ft. lower than A and 500 ft. east of A. On level A the opening is through earth, below A through solid rock. The cost through earth is $1 per linear ft., through rock $3 per linear ft. Find the distance tunneled on level A for least cost, and find the least cost.

In Fig. 69 the distances are marked in hundred feet. The cost of a tunnel from A to P is $100(5-x)$ dollars, and of the incline from P to B is $100\times PB\times 3=300\sqrt{9+x^2}$ dollars. Hence the total cost is $100[5-x+3\sqrt{9+x^2}]$ dollars. Fig. 70 shows the graph of this function. For minimum cost the derivative must vanish, hence $\frac{d}{dx}[5-x+\sqrt{9+x^2}]=0$. The result (see Ex. 1, Art. 20) is $-1+3x/\sqrt{9+x^2}=0$, or $\sqrt{9+x^2}=3x$. Squaring and solving for x, $x=\sqrt{9/8}=3\sqrt{2}/4=1.06$. Hence the length of the tunnel section is $500-106=394$ ft. The length of the inclined part through rock is $\sqrt{9+9/8}=3.18$ hundred feet. The minimum cost is $394+954=\$1{,}348$.

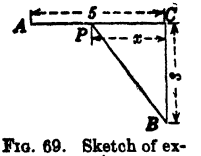

FIG. 69. Sketch of excavation.

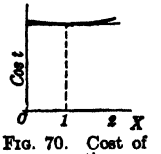

FIG. 70. Cost of excavation.

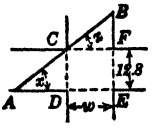

FIG. 71. Sketch for Ex. 2.

(2) A girder 25 ft. long is moved on rollers along a passageway 12.8 ft. wide and thence into a corridor at right angles to the passageway. Neglecting the width of the girder, how wide must the corridor be?

In Fig. 71, $w=AE-AD=AB\cos x-CD\cot x$, or $w=25\cos x-12.8\cot x$. When the girder just swings clear, w is a maximum, hence $dw/dx=0$. This gives (by Ex. 2, Art. 20) $-25\sin x$

$+ 12.8 \csc^2 x = 0$. From Art. 15, $\csc x = 1/\sin x$, hence $\sin^3 x = 12.8/25 = 64/125$. Then $\sin x = 4/5$, and $\cos x = 3/5$, $\cot x = 3/4$, $w = 25(3/5) - 12.8(3/4) = 15 - 9.6 = 5.4$ ft.

Derivatives of higher order arise when the first derivative is differentiated, this result differentiated, etc. The order of a derivative is indicated by the number of times the original function is differentiated. A second derivative is the derivative of the first derivative. The notation is $\frac{d}{dx}\left(\frac{dy}{dx}\right) = \frac{d^2y}{dx^2}$ (SECOND DERIVATIVE); d^3y/dx^3, d^4y/dx^4, . . ., d^ny/dx^n, third, fourth, . . ., nth, derivative, respectively. For $f(x)$, successive derivatives are indicated by placing an accent on the f, as $f'(x)$, $f''(x)$, $f'''(x)$, $f^{IV}(x)$ . . . $f^{(n)}(x)$.

Sign of second derivative for a given value of x determines whether the graph is concave downward (a maximum as at A, Fig. 68) or concave upward (a minimum as at B). If positive, it is a minimum; if negative, a maximum. This is a convenient test when the second derivative can be calculated readily.

Differential of a function is the product of its derivative by the increment of the independent variable. $d[f(x)] = f'(x)\Delta x$. Then $d(x) = 1 \times \Delta x$ (written $dx = \Delta x$). Also $dy = dy/dx$ times dx. The differential and the increment of an independent variable are identical, but the differential and increment of a function are not. In Fig. 72, when passing from P to P', $\Delta x = MM' = PQ = dx$, increment of function $y = f(x)$ is QP', but the differential of the function is QT, that is, the differential of the function is the increment of the ordinate of the tangent to the graph at the point under consideration. Differentials are INFINITESIMALS, *i.e.*, variables whose numerical values decrease and ultimately become zero. The preceding definitions give the derivative equal to the quotient of corresponding differentials dy and dx (a DIFFERENTIAL QUOTIENT). The differential of a function is the principal part of its increment. The ratio of the increment to the differential becomes unity when the increment of the variable becomes zero. In problems involving infinitesimals, the increment of a function is replaced by its differential. This principle of replacing the increment by its differential has wide application in calculus. More generally, one infinitesimal may be replaced by another if the limit of their ratio is unity.

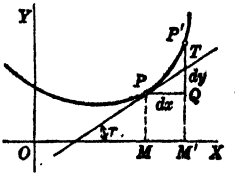

FIG. 72. Differential.

Example. Find the differential of the arc of a curve. Passing from P to Q along the curve (Fig. 73), the increment of arc is arc $PQ = \Delta s$. The chord $PQ = \sqrt{(\Delta x)^2 + (\Delta y)^2}$. When $\Delta x = 0$, the ratio of arc PQ to chord PQ becomes unity. Hence chord PQ may be replaced by Δs, this by ds, and Δx and Δy by dx and dy, respectively. Hence $ds = \sqrt{dx^2 + dy^2}$.

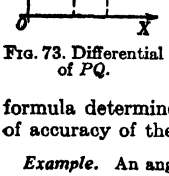

FIG. 73. Differential of PQ.

Differential of arc s of a curve. In rectangular co-ordinates, $ds = \sqrt{dx^2 + dy^2} = \sqrt{1 + (dy/dx)^2}\,dx = \sqrt{1 + (dx/dy)^2}\,dy$. In polar co-ordinates $ds = \sqrt{d\rho^2 + \rho^2 d\theta^2} = \sqrt{\rho^2 + (d\rho/d\theta)^2}\,d\theta$.

Small errors. If an error h is made in measuring x, the corresponding error in calculating $f(x)$ is $f(x + h) - f(x)$ = increment of $f(x)$. When h is numerically small, the increment of the function may be replaced by its differential, that is, *error in* $f(x)$ = $f'(x)$ *times error in* x. This formula determines the degree of approximation in value of a function when the degree of accuracy of the measurement of the variable is known.

Example. An angle x is measured as 45° with a possible error of ±1′. What is the corresponding error in $\tan x$? *Solution.* The error in $\tan x = \frac{d}{dx}(\tan x)$ times the error in x (in radians) = $\sec^2 x$ times *error in* x. $1' = 0.000291$ rad. (see Table 15, Sec. 22). $\sec^2 45° = 2$. Hence the required error is ±0.000582 unit, that is, $\tan x$ lies between 0.999 and 1.001, using three decimal places.

Probable error of $y = f(x)$ is $f'(x)$ *times the probable error in* x. (Art. 11.)

Partial derivatives. A function of several independent variables $x, y, z, \ldots$ is represented by $f(x, y, z, \ldots)$. Derivatives may be formed by varying one variable only, and are called PARTIAL DERIVATIVES. NOTATION: $\delta f/\delta x$, $\delta f/\delta y$, $\delta f/\delta z$, etc., or $D_x f$, $D_y f$, $D_z f$, etc. The TOTAL DIFFERENTIAL is $df = \frac{\delta f}{\delta x}dx + \frac{\delta f}{\delta y}dy + \frac{\delta f}{\delta z}dz + \ldots$

When the independent variables receive increments dx, dy, dz, etc., the PRINCIPAL PART of the increment of the function is df. When $x, y, z \ldots$ are functions of the same variable t, the TOTAL DERIVATIVE of f with respect to t is

$$\frac{df}{dt} = \frac{\delta f}{\delta x}\frac{dx}{dt} + \frac{\delta f}{\delta y}\frac{dy}{dt} + \frac{\delta f}{\delta z}\frac{dz}{dt} + \ldots$$

This formula gives the rate of change of a function in terms of the rates of change of the independent variables.

Small errors. When the value of a function is determined by measurement of several variables $x, y, z, \ldots$ with small errors $dx, dy, dz, \ldots$, the corresponding error df in the function is given by the above formula for total differential df.

Example. Two sides x, y of a triangle are 81.25 in., 91.04 in., respectively, with possible errors ± 0.01 in. in each. The included angle C is 30° with a possible error of 1′. Find the maximum error possible in the area.

Solution. Area $= u = \frac{1}{2}xy \sin C$ (Art. 13). Form du by the above formula. Then $du = \frac{1}{2}y \sin C\,dx + \frac{1}{2}x \sin C dy + \frac{1}{2}xy \cos C dC$. Substitute $x = 81.25$, $y = 91.04$, $dx = dy = 0.01$, $\sin C = 0.5$, $\cos C = 0.8660$, $dC = 0.0002909$ (radians in 1′). Result is $du = 1.36$ sq. in. The area computed by the given values is 1,850 sq. in.

Percentage error is the relative error du/u (d Nap log u) times 100.

In the above example, $du/u = dx/x + dy/y + \cot C dC$, that is, the relative error in area equals the sum of the relative errors in measurements of the sides x and y increased by the relative error in $\sin C$. (See Art. 1.) With the same absolute error in reading the angle C, the relative error in the value of $\sin C$ decreases as C increases. For the values given, $du/u = 0.000735$. Hence the percentage error is $\frac{7}{100}$ of 1%.

Probable error e of a function $f(x, y, z, \ldots)$ in terms of the probable errors $e_1, e_2, e_3 \ldots$ of measured quantities x, y, z, is given by formula

$$e = \sqrt{(\delta f/\delta x)^2 e_1^2 + (\delta f/\delta y)^2 e_2^2 + (\delta f/\delta z)^2 e_3^2 + \ldots}$$

Rates. In Fig. 72 rate of change of y along the tangent PT per unit change in x is constant and equals numerically the slope of the tangent. But the rate of change of the function at P (instantaneous rate) per unit change in x is the same as the rate of change at y along the tangent at P. This gives an interpretation of dy/dx as a rate, namely, rate of change in y per unit change in x.

Examples. (1) The velocity of a point moving along a line at a distance x from a fixed point on that line is dx/dt (variable t representing time), since VELOCITY is the rate of change of distance per unit change in time (time-rate of change of distance). ACCELERATION $= dv/dt$, the time-rate of change of velocity.

(2) Sand pouring from a chute at the rate of 50 cu. ft. per min. forms a conical pile with base diameter always equal to height. How rapidly is the height of the pile increasing when it is 10 ft. high?

Volume of pile $= V = \frac{1}{3}\pi x \cdot x^2/4 = \pi x^3/12$, when x = diameter = height. Differentiating with respect to t, $dV/dt = \pi/12 \times 3x^2 dx/dt$. But dV/dt = time-rate of change of volume = 50 cu. ft. per min., and $x = 10$ ft. Also dx/dt is the rate at which the height of the pile is increasing per unit time. This is the unknown sought. Solving, $dx/dt = 4\frac{dV}{dt}/\pi x^2 = 200/100\pi = 0.64$ ft. per min.

Curvature of a curve is the rate at which a point describing the curve changes direction of motion. CURVATURE AT A POINT is the rate of change of the angle which the tangent forms with a fixed line per unit arc on the curve (arc-rate of change of direction). In Fig. 74 the tangent turns through angle Δi as P moves to P', a distance Δs along the curve. The curvature at $P = di/ds$. Angle i is measured in radians, and curvature is therefore expressed in radians per unit length of arc. The CURVATURE OF A CIRCLE is the same at all points and equals the reciprocal of the radius, numerically. CIRCLE OF CURVATURE (Fig. 75) at point P on a curve is the circle tangent at P whose curvature equals that of the curve at P. The center of this circle is the CENTER OF CURVATURE of the curve. The circle of curvature crosses the curve at the point of contact.

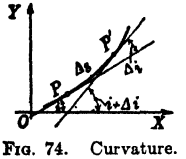

FIG. 74. Curvature.

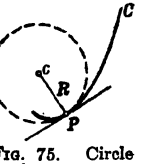

FIG. 75. Circle of curvature.

Formulas for curvature

Rectangular co-ordinates. K = curvature, R = radius of curvature, (a, b) = center of curvature, $p = dy/dx$, $q = d^2y/dx^2$.

$$K = q/(1 + p^2)^{3/2}. \qquad R = 1/K. \qquad a = x - p(1 + p^2)/q. \qquad b = y + (1 + p^2)/q.$$

Polar co-ordinates. $s = d\rho/d\theta$, $t = d^2\rho/d\theta^2$.

$$K = (\rho^2 - t\rho + 2s^2)/(\rho^2 + s^2)^{3/2}. \qquad R = 1/K.$$

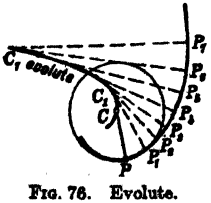

FIG. 76. Evolute.

The point of intersection of normals drawn at consecutive points $P(x, y)$ and $Q(x + \Delta x, y + \Delta y)$ approaches the center of curvature at P when Q moves along the curve toward P.

Evolute of a curve (Fig. 76) is the locus of the centers of curvature of that curve. To find the equation of the evolute from the rectangular equation of the curve, work out expressions for a and b by the formulas given above, and eliminate x and y from these equations by means of the equation of the given curve.

Table 10. Radii of curvature (R) and evolutes for standard curves

Parabola ($y^2 = 2px$).
$R = (p + 2x)^{3/2}/\sqrt{p} = (p^2 + y^2)^{3/2}/p^2$ at (x, y).
Evolute $27py^2 = 8(x - p)^3$.

Ellipse ($b^2x^2 + a^2y^2 = a^2b^2$).
$R = (b^4x^2 + a^4y^2)^{3/2}/a^4b^4$ at (x, y).
Evolute $(ax)^{2/3} + (by)^{2/3} = (a^2 - b^2)^{2/3}$.

Hyperbola ($b^2x^2 - a^2y^2 = a^2b^2$).
$R = (b^4x^2 + a^4y^2)^{3/2}/a^4b^4$ at (x, y).
Evolute $(ax)^{2/3} - (by)^{2/3} = (a^2 + b^2)^{2/3}$.

Rectangular hyperbola ($2xy = a^2$).
$R = (x^2 + y^2)^{3/2}/a^2$ at (x, y).
Evolute $(x + y)^{2/3} - (x - y)^{2/3} = 2a^{2/3}$.

Cycloid (equations, Art. 19).
$R = 4a \sin \theta/2 = 2AP$ (Fig. 57).
Evolute $x = a(\theta' - \sin \theta')$; $y = a(1 - \cos \theta')$; $(\theta' = \theta + \pi)$, an equal cycloid.

Epicycloid (equations, Art. 19).
$R = 4(R' + r)r \sin (R'\theta/2r)/(R' + 2r)$. ($R'$ = the radius of the fixed circle.)

Hypocycloid (equations, Art. 19).
$R = 4(R' - r)r \sin (R'\theta/2r)/(R' - 2r)$. ($R'$ = the radius of the fixed circle.)

Catenary (Art. 19), $(y = a \cosh x/a)$.
$R = y^2/a$, at any point (x, y).

Spiral of Archimedes (Art. 19), $(\rho = a\theta$ [θ in radians]).
$R = (\rho^2 + a^2)^{3/2}/(\rho^2 + 2a^2)$.

Logarithmic spiral (Art. 19), $(\rho = be^{a\theta})$.
$R = \rho\sqrt{1 + a^2}$.

Properties of an evolute. The normal to a given curve is tangent to the evolute at the corresponding center of curvature. The length of the arc of the evolute between two centers of curvature equals the difference of radii of the circles of curvature of the given curve having these centers.

In Fig. 76, arc C_1C_7 on the evolute = radius C_7P_7 − radius C_1P_1.

Curves having a given curve as a common evolute are called INVOLUTES of that curve. (Also called PARALLEL CURVES.)

Fig. 77 shows three involutes with a common evolute. If a flexible string is made to take the form of the evolute, and the free end is unwound and kept taut, this end will move along an involute.

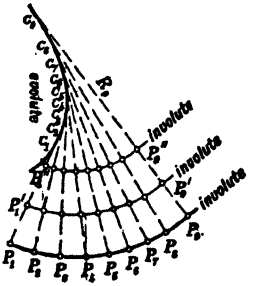

FIG. 77. Involutes.

22. SERIES

Definitions. A POWER SERIES consists of an indicated sum of terms each of which is the product of a constant and a positive integral power of a variable, arranged according to ascending powers of the variable, the number of terms being unlimited (INFINITE SERIES); thus: $1 + \frac{1}{2}x + \frac{1}{3}x^2 + \frac{1}{4}x^3 + \ldots$ *ad infinitum*. For a given value of the variable, the sum S_n of n (any number of) terms is a function of n. If, as n increases indefinitely, S_n remains finite and approaches a definite value S, that is, if $\lim_{n=\infty} S_n = S$, then the series is said to be CONVERGENT for this value of the variable and to have a sum equal to S. A power series which is convergent for values of the variable within a certain interval is called a CONVERGENT SERIES. A power series convergent for no value of the variable is called DIVERGENT.

Expansion of a function in a power series is accomplished by various formulas.

Taylor's series. Powers of $(x - a)$, where a is a given value of x.

$$f(x) = f(a) + f'(a)(x - a) + f''(a)\frac{(x - a)^2}{1 \cdot 2} + f'''(a)\frac{(x - a)^3}{1 \cdot 2 \cdot 3} + \ldots + f^n(a)\frac{(x - a)^n}{n!} + \ldots$$

Expansion of a function as a polynomial of nth degree with a remainder is given by Taylor's Series, using first $(n+1)$ terms and adding the REMAINDER TERM, $f^{(n+1)}(z)x^{n+1}/(n+1)!$, where the value of z lies between a and x. This polynomial gives an approximate representation of the function for those values of x for which the remainder term is numerically less than the limit of error determined by the problem in hand.

Maclaurin's series. Powers of x.

$$f(x) = f(o) + f'(o)x + f''(o)\frac{x^2}{1\cdot 2} + f'''(o)\frac{x^3}{1\cdot 2\cdot 3} + \ldots + f^{(n)}(o)\frac{x^n}{n!} + \ldots .$$

Such expansions are valid only for values of x for which the series is convergent. Determination of the interval of convergence of a given series is a necessary precaution before using it instead of the function in numerical calculations (see Table 11).

Alternating series have the characteristic that successive terms have opposite signs. Such a series converges if successive terms decrease in numerical value and tend toward a limit zero. The sum is then less than the first term.

Table 11. Convergent power series

No.	Series	Interval of convergence
1	$(1+x)^{-\frac{1}{2}} = 1 - \frac{1}{2}x + \frac{1\cdot 3}{2\cdot 4}x^2 - \frac{1\cdot 3\cdot 5}{2\cdot 4\cdot 6}x^3 + \cdots$	$x^2 < 1$
2	$(a+bx)^{-1} = \frac{1}{a}\left(1 - \frac{bx}{a} + \frac{b^2x^2}{a^2} - \frac{b^3x^3}{a^3} + \cdots\right)$	$b^2x^2 < a^2$
3	$(1+x)^n = 1 + nx + \frac{n(n-1)}{2!}x^2 + \frac{n(n-1)(n-2)}{3!}x^3 + \cdots$	$x^2 < 1$
4	$e^x = 1 + x + \frac{x^2}{2!} + \frac{x^3}{3!} + \cdots + \frac{x^n}{n!} + \cdots$	All values of x
5	$\sin x = x - \frac{x^3}{3!} + \frac{x^5}{5!} - \frac{x^7}{7!} + \cdots$	All values of x
6	$\cos x = 1 - \frac{x^2}{2!} + \frac{x^4}{4!} - \frac{x^6}{6!} + \cdots$	All values of x
7	$\tan x = x + \frac{x^3}{3} + \frac{2}{15}x^5 + \frac{17}{315}x^7 + \cdots$	$x^2 < \frac{1}{4}\pi^2$
8	$\log_e x = 2\left(\frac{x-1}{x+1} + \frac{1}{3}\left(\frac{x-1}{x+1}\right)^3 + \frac{1}{5}\left(\frac{x-1}{x+1}\right)^5 + \cdots\right)$	$x > 0$
9	$\sec x = 1 + \frac{x^2}{2!} + \frac{5x^4}{4!} + \frac{61x^6}{6!} + \cdots$	$x^2 < \frac{1}{4}\pi^2$
10	$\sin^{-1} x = x + \frac{1}{6}x^3 + \frac{1\cdot 3}{2\cdot 4}\frac{x^5}{5} + \frac{1\cdot 3\cdot 5}{2\cdot 4\cdot 6}\frac{x^7}{7} + \cdots$	$x^2 < 1$
11	$\tan^{-1} x = x - \frac{1}{3}x^3 + \frac{1}{5}x^5 - \frac{1}{7}x^7 + \cdots$	$x^2 < 1$
12	$\sinh x = x + \frac{x^3}{3!} + \frac{x^5}{5!} + \frac{x^7}{7!} + \cdots$	All values of x
13	$\cosh x = 1 + \frac{x^2}{2!} + \frac{x^4}{4!} + \frac{x^6}{6!} + \cdots$	All values of x

Approximate formula for a function results when the function is set equal to a finite number of terms of its expansion in a convergent series. Such a formula holds with a certain degree of exactness for values of the variable for which the series is convergent. If the series is alternating, the error is less than the term in the series following the last term in the formula used.

Example: $1/\sqrt{1+x} = 1 - \frac{1}{2}x$ for $x^2 < 1$. The error is numerically less than $3x^2/8$. This result follows directly from Table 11, item 1.

Computation by series is often a useful means of calculation when tables are not at hand, or when the degree of approximation desired exceeds that given in tables or obtainable by logarithms which are accessible.

Example. Calculate $(34)^{2/5}$ to four decimal places. The nearest fifth power to 34 is $32 = 2^5$. Write the required quantity $(32 + 2)^{2/5} = (32(1 + 1/16))^{2/5} = (32)^{2/5}(1 + 1/16)^{2/5} = 4(1 + 1/16)^{2/5}$. Now $(1 + x)^{2/5} = 1 + 2x/5 - 3x^2/25 + 8x^3/125 - 26x^4/625 +$ etc. (Table 11, item 3). Put $x = 1/16$. Then $(34)^{2/5} = 4 + 0.1 - 0.001875 + 0.0000625 - 0.000003 + \ldots$ Taking four terms, the result is 4.0981875 and the error is less than the fifth term 0.000003. Hence 4.09818 is correct to five decimal places. (See Table 8, Sec. 22.)

23. INTEGRATION

Definitions. INTEGRATION is the process of finding a function of which a given function is the derivative, hence it is the inverse of differentiation. The sign of integration is $\int$, read "*integral of.*" The process is indicated by writing the integral sign before the given function multiplied by the differential of the variable.

Example. $\int 6x dx = 3x^2$, since $\frac{d}{dx}(3x^2) = 6x$. Also $\int 6x dx = 3x^2 + C$, where C is any constant (CONSTANT OF INTEGRATION).

Integration is accomplished by reference to a Table of Integrals. The given integral is compared with one of similar form in the table, and, if necessary, made identical with this by simple substitutions. The examples given below illustrate the method.

Table 12. Integrals *

General forms

(1) $\int d[f(x)]\,dx = f(x)$.

(2) $\int cf(x)dx = c\int f(x)dx$, where c is a constant.

(3) $\int (u + v)dx = \int udx + \int vdx$.

(4) $\int udv = uv - \int vdu$.

Remark. Formula 4, "integration by parts" is very useful. It may be written

$$\int h(x)d[f(x)] = h(x)f(x) - \int f(x)d[h(x)].$$

The integral remaining in the right-hand member may often be found in tables when the original integral is not. In applying the formula, the given integrand is to be factored into the product of a function $h(x)$ by the differential of another function $f(x)$.

Integrals involving $a + bx$

(5) $\int (a + bx)^n dx = \frac{(a + bx)^{n+1}}{b(n + 1)}$, unless $n = -1$, then use 6.

(6) $\int \frac{dx}{a + bx} = \frac{1}{b}\,\text{Nap log}\,(a + bx)$.

(7) $\int \frac{xdx}{a + bx} = \frac{1}{b^2}[a + bx - a\,\text{Nap log}\,(a + bx)]$.

(8) $\int \frac{x^2dx}{a + bx} = \frac{1}{b^3}[1/2\,(a + bx)^2 - 2a(a + bx) + a^2\,\text{Nap log}\,(a + bx)]$.

(9) $\int \frac{dx}{x(a + bx)} = -\frac{1}{a}\,\text{Nap log}\,\frac{a + bx}{x}$.

(10) $\int \frac{xdx}{(a + bx)^2} = \frac{1}{b^2}\left[\text{Nap log}\,(a + bx) + \frac{a}{a + bx}\right]$.

(11) $\int \frac{x^2dx}{(a + bx)^2} = \frac{1}{b^3}\left[a + bx - 2a\,\text{Nap log}\,(a + bx) - \frac{a^2}{a + bx}\right]$.

* The constant of integration C should be added to the right-hand member in every formula. a, b, c, m, n, p, are constants.

(12) $\int x\sqrt{a+bx}\,dx = -\frac{2(2a-3bx)\sqrt{(a+bx)^3}}{15b^2}$.

(13) $\int \frac{dx}{x\sqrt{a+bx}} = \frac{1}{\sqrt{a}}\,\text{Nap log}\,\frac{\sqrt{a+bx}-\sqrt{a}}{\sqrt{a+bx}+\sqrt{a}}$, for $a > 0$.

(14) $\int \frac{dx}{x\sqrt{a+bx}} = \frac{2}{\sqrt{-a}}\tan^{-1}\sqrt{\frac{a+bx}{-a}}$, for $a < 0$.

(15) $\int \frac{x\,dx}{\sqrt{a+bx}} = -\frac{2(2a-bx)}{3b^2}\sqrt{a+bx}$.

(16) $\int \frac{\sqrt{a+bx}\,dx}{x} = 2\sqrt{a+bx} + a\int \frac{dx}{x\sqrt{a+bx}}$.

(17) $\int \frac{x^n dx}{\sqrt{a+bx}} = \frac{2x^n\sqrt{a+bx}}{b(2n+1)} - \frac{2an}{b(2n+1)}\int \frac{x^{n-1}dx}{\sqrt{a+bx}}$.

(18) $\int \frac{dx}{x^n\sqrt{a+bx}} = -\frac{\sqrt{a+bx}}{(n-1)ax^{n-1}} - \frac{(2n-3)b}{2(n-1)a}\int \frac{dx}{x^{n-1}\sqrt{a+bx}}$, unless $n = -1$, then see 13, 14.

Integrals involving $a^2 - x^2$, or $x^2 - a^2$, or $x^2 + a^2$

(19) $\int \frac{dx}{a^2-b^2x^2} = \frac{1}{2ab}\,\text{Nap log}\,\frac{a+bx}{a-bx}$.

(20) $\int \frac{dx}{a^2+b^2x^2} = \frac{1}{ab}\tan^{-1}\frac{bx}{a}$.

(21) $\int \frac{dx}{\sqrt{a^2-x^2}} = \sin^{-1}\frac{x}{a}$.

(22) $\int \frac{dx}{\sqrt{x^2 \pm a^2}} = \text{Nap log}\,(x + \sqrt{x^2 \pm a^2})$.

(23) $\int \frac{dx}{\sqrt{x^2+a^2}} = \sinh^{-1}\frac{x}{a}$.

(24) $\int \frac{dx}{\sqrt{x^2-a^2}} = \cosh^{-1}\frac{x}{a}$.

(25) $\int x(a+bx^2)^p dx = \frac{(a+bx^2)^{p+1}}{2b(p+1)}$, unless $p = -1$, then use 26.

(26) $\int \frac{x\,dx}{a+bx^2} = \frac{1}{2b}\,\text{Nap log}\,(a+bx^2)$.

(27) $\int \sqrt{a^2-x^2}\,dx = {}^1/_2\,x\sqrt{a^2-x^2} + {}^1/_2\,a^2\sin^{-1}\frac{x}{a}$.

(28) $\int \sqrt{x^2 \pm a^2}\,dx = {}^1/_2\,x\sqrt{x^2 \pm a^2} \pm {}^1/_2\,a^2\,\text{Nap log}\,(x + \sqrt{x^2 \pm a^2})$.

(29) $\int \frac{dx}{x\sqrt{x^2-a^2}} = \frac{1}{a}\cos^{-1}\frac{a}{x}$.

(30) $\int \frac{dx}{x\sqrt{a^2 \pm x^2}} = -\frac{1}{a}\,\text{Nap log}\left(\frac{a+\sqrt{a^2 \pm x^2}}{x}\right)$.

(31) $\int \frac{\sqrt{a^2 \pm x^2}\,dx}{x} = \sqrt{a^2 \pm x^2} - a\,\text{Nap log}\left(\frac{a+\sqrt{a^2 \pm x^2}}{x}\right)$.

(32) $\int \frac{\sqrt{x^2-a^2}\,dx}{x} = \sqrt{x^2-a^2} - a\cos^{-1}\frac{a}{x}$.

(33) $\int \frac{\sqrt{a^2-x^2}}{x^2}\,dx = -\frac{\sqrt{a^2-x^2}}{x} - \sin^{-1}\frac{x}{a}$.

(34) $\int \frac{\sqrt{x^2 \pm a^2}}{x^2}\,dx = -\frac{\sqrt{x^2 \pm a^2}}{x} + \text{Nap log}\,(x + \sqrt{x^2 \pm a^2}).$

(35) $\int \frac{x^m dx}{(a^2 - x^2)^{\frac{1}{2}}} = -\frac{x^{m-1}}{m}\sqrt{a^2 - x^2} + \frac{(m-1)a^2}{m}\int \frac{x^{m-2}}{(a^2 - x^2)^{\frac{1}{2}}}\,dx.$

(36) $\int \frac{x^m dx}{\sqrt{x^2 \pm a^2}} = \frac{x^{m-1}}{m}\sqrt{x^2 \pm a^2} \mp \frac{a^2(m-1)}{m}\int \frac{x^{m-2}dx}{\sqrt{x^2 \pm a^2}}.$

Integrals involving $a + bx + cx^2$

(37) $\int \frac{dx}{a + bx + cx^2} = \frac{2}{\sqrt{4ac - b^2}}\tan^{-1}\frac{2cx + b}{\sqrt{4ac - b^2}}$, when $b^2 < 4ac$.

(38) $\int \frac{dx}{a + bx + cx^2} = \frac{1}{\sqrt{b^2 - 4ac}}\,\text{Nap log}\,\frac{2cx + b - \sqrt{b^2 - 4ac}}{2cx + b + \sqrt{b^2 - 4ac}}$, when $b^2 > 4ac$.

(39) $\int \frac{dx}{\sqrt{a + bx - cx^2}} = \frac{1}{\sqrt{c}}\sin^{-1}\frac{2cx - b}{\sqrt{b^2 + 4ac}}.$

(40) $\int \frac{dx}{\sqrt{a + bx + cx^2}} = \frac{1}{\sqrt{c}}\,\text{Nap log}\,(2cx + b + 2\sqrt{c}\sqrt{a + bx + cx^2}).$

(41) $\int \frac{x\,dx}{a + bx + cx^2} = \frac{1}{2c}\,\text{Nap log}\,(a + bx + cx^2) - \frac{b}{2c}\int \frac{dx}{a + bx + cx^2}.$

(42) $\int \frac{x\,dx}{\sqrt{a + bx + cx^2}} = \frac{1}{c}\sqrt{a + bx + cx^2} - \frac{b}{2c}\int \frac{dx}{\sqrt{a + bx + cx^2}}.$

Other algebraic integrals

(43) $\int x^{n-1}(a + bx^n)^p dx = \frac{(a + bx^n)^{p+1}}{bn(p+1)}$, unless $p = -1$, then use **44.**

(44) $\int \frac{x^{n-1}dx}{a + bx^n} = \frac{1}{nb}\,\text{Nap log}\,(a + bx^n).$

Integrals involving transcendental functions

(45) $\int e^{ax}dx = e^{ax}/a.$

(46) $\int a^{nx}dx = a^{nx}/n\,\text{Nap log}\,a.$

(47) $\int \text{Nap log}\,nx\,dx = x\,(\text{Nap log}\,nx - 1).$

(48) $\int \sin ax\,dx = -\cos ax/a.$

(49) $\int \cos ax\,dx = \sin ax/a.$

(50) $\int \tan ax\,dx = \text{Nap log}\,\sec ax/a.$

(51) $\int \cot ax\,dx = \text{Nap log}\,\sin ax/a.$

(52) $\int \sec ax\,dx = \text{Nap log}\,(\sec ax + \tan ax)/a.$

(53) $\int \csc ax\,dx = \text{Nap log}\,(\csc ax - \cot ax)/a.$

(54) $\int \sin^2 ax\,dx = \left(\frac{a}{2}x - \frac{1}{4}\sin 2ax\right)/a.$

(55) $\int \cos^2 ax\,dx = \left(\frac{ax}{2} + \frac{1}{4}\sin 2ax\right)/a.$

(56) $\int \tan^2 ax\,dx = \tan ax/a - x.$

(57) $\int \cot^2 ax\,dx = -\cot ax/a - x.$

(58) $\int \sec^2 ax\,dx = \tan ax/a.$

(59) $\int \csc^2 ax\,dx = -\cot ax/a.$

(60) $\int \sec ax \tan ax\,dx = \sec ax/a.$

(61) $\int \csc ax \cot ax\,dx = -\csc ax/a.$

(62) $\int (\sin x)^n dx = -\frac{(\sin x)^{n-1}\cos x}{n} + \frac{n-1}{n}\int (\sin x)^{n-2} dx.$

(63) $\int (\cos x)^n\,dx = \frac{(\cos x)^{-1}\sin x}{n} + \frac{n-1}{n}\int (\cos x)^{n-2}\,dx.$

(64) $\int (\sin x)^n \cos x\,dx = \frac{(\sin x)^{n-1}}{n+1}.$

(65) $\int (\cos x)^n \sin x\,dx = -\frac{(\cos x)^{n+1}}{n+1}.$

(66) $\int (\tan x)^n\,dx = \frac{(\tan x)^{n-1}}{n-1} - \int (\tan x)^{n-2}\,dx.$

(67) $\int (\cot x)^n\,dx = -\frac{(\cot x)^{n-1}}{n-1} - \int (\cot x)^{n-2}\,dx.$

(68) $\int xe^{ax}dx = \frac{e^{ax}}{a^2}(ax-1).$

(69) $\int x^n e^{ax}dx = \frac{x^n e^{ax}}{a} - \frac{n}{a}\int x^{n-1}e^{ax}dx.$

(70) $\int x^n \operatorname{Nap\,log} x\,dx = x^{n+1}\left[\frac{\operatorname{Nap\,log} x}{n+1} - \frac{1}{(n+1)^2}\right].$

(71) $\int x^m \sin x\,dx = -x^m \cos x + m\int x^{m-1}\cos x\,dx.$

(72) $\int x^m \cos x\,dx = x^m \sin x - m\int x^{m-1}\sin x\,dx.$

(73) $\int e^{ax}\sin nx\,dx = \frac{e^{ax}(a\sin nx - n\cos nx)}{a^2+n^2}.$

(74) $\int e^{ax}\cos nx\,dx = \frac{e^{ax}(n\sin nx + a\cos nx)}{a^2+n^2}.$

(75) $\int \sin^{-1} x\,dx = x\sin^{-1}x + \sqrt{1-x^2}.$

(76) $\int \cos^{-1} x\,dx = x\cos^{-1}x - \sqrt{1-x^2}.$

(77) $\int \tan^{-1} x\,dx = x\tan^{-1}x - 1/2 \operatorname{Nap\,log}(1+x^2).$

(78) $\int \sec^{-1} x\,dx = x\sec^{-1}x - \operatorname{Nap\,log}(x + \sqrt{x^2-1}).$

(79) $\int \sinh x\,dx = \cosh x.$

(80) $\int \cosh x\,dx = \sinh x.$

(81) $\int \tanh x\,dx = \operatorname{Nap\,log}\cosh x.$

(82) $\int \coth x\,dx = \operatorname{Nap\,log}\sinh x.$

For a more extended table, see B. O. Peirce, *A short table of integrals*, Ginn & Company, Boston, Mass.

Use of Table

(1) Work out $\int \sqrt{9-4x^2}\,dx.$

Since $\sqrt{9-4x^2} = 2\sqrt{(3/2)^2 - x^2}$, then $\int \sqrt{9-4x^2}\,dx = \int 2\sqrt{(3/2)^2-x^2}\,dx = 2\int \sqrt{(3/2)^2-x^2}\,dx$, by (2). The integral remaining is now in the form (27), with $a = 3/2$. $\therefore \int \sqrt{9-4x^2}\,dx = x\sqrt{(3/2)^2-x^2} + (3/2)^2 \sin^{-1} 2x/3 + C.$

(2) Work out $\int x \sin 2x\, dx$.

This resembles formula 71. Put $v = 2x$, or $x = 1/2\, v$. Hence $dx = 1/2\, dv$. Then $\int x \sin 2x\, dx = \int 1/2\, v \sin v\ 1/2\, dv = 1/4 \int v \sin v\, dv$, by (2). The remaining integral is now (71), with $m = 1$. Using this and then putting $v = 2x$, the result is $1/4 \sin 2x - 1/2\, x \cos 2x + C$.

(3) Work out $\int \frac{x^2 dx}{4 - x^2}$.

This example illustrates cases where the division indicated in the integral can be performed. For $x^2/(4 - x^2) = -1 + 4/(4 - x^2)$.

$$\therefore \int \frac{x^2 dx}{4 - x^2} = -\int dx + 4 \int \frac{dx}{4 - x^2} = -x + \text{Nap log} \frac{2 + x}{2 - x} + C.$$

As a rule, in a quotient of two polynomials, divide numerator by denominator when the latter is of lower degree than the former or of the same degree.

Constant of integration. Integration by tables gives INDEFINITE INTEGRALS. Two indefinite integrals of a function differ by a constant. The CONSTANT OF INTEGRATION appearing in an indefinite integral takes on a definite value when the data of the problem are given properly.

Example. The slope of a certain curve at any point (x, y) is $-3x/2y$, and the curve passes through (4, 6). Find the equation of curve.

By Art. 20, the slope $= dy/dx$. Hence $dy/dx = -3x/2y$, from which the differential equation $2y dy = -3x dx$ results. Integrating both members, $y^2 = -3x^2/2 + C$, when C is to be determined so that the curve passes through (4, 6). Putting $x = 4$, $y = 6$, then $36 = -24 + C$, hence $C = 60$. The required equation is $y^2 = -3x^2/2 + 60$, or $3x^2 + 2y^2 - 120 = 0$, an ellipse.

Definite integral. Integrating between limits (DEFINITE INTEGRAL) consists in evaluating an indefinite integral for two values of variable x, say $x = b$, and $x = a$, and subtracting the results. The constant of integration then disappears. The notation follows: If $\int f(x)dx = F(x) + C$, then $\int_a^b f(x)dx = F(b) - F(a)$. b is the UPPER LIMIT; a the LOWER LIMIT. Interchanging the limits changes the sign of the definite integral.

24. APPLICATIONS OF INTEGRAL CALCULUS

Areas. Area between the curve $y = f(x)$, the X-axis, and the ordinates at $x = a$, $x = b$ (Fig. 78), such as area $CDPFE$, is given by the definite integral

$$Area = \int_a^b y\, dx, \text{ when } y = f(x).$$

Area swept over by radius vector ρ of a curve, $\rho = f(\theta)$, turning from $\theta = \alpha$ to $\theta = \beta$ is

$$Area = 1/2 \int_\alpha^\beta \rho^2 d\theta, \text{ when } \rho = f(\theta).$$

Area of surface of revolution. (x, y) is a point on the meridian section.

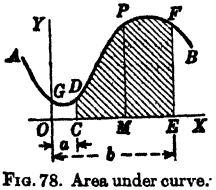

FIG. 78. Area under curve.

$$S = 2\pi \int y\, ds, \quad \text{or} \quad S = 2\pi \int x\, ds$$

according to whether the axis of revolution is OX, or OY.

The value of ds is worked out by differential equations on p. 45 and the limits of the integral are determined by the coordinates of the extremities of the meridian section.

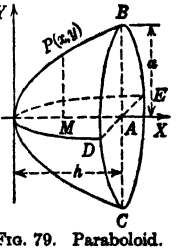

FIG. 79. Paraboloid.

Examples. (1) Find the length of arc of one arch of a cycloid (Art. 19) with the equations $x = a(\theta - \sin\theta)$, $y = a(1 - \cos\theta)$.

Differentiating, $dx = a(1 - \cos\theta)d\theta$, $dy = a \sin\theta\, d\theta$.

Hence $dx^2 + dy^2 = a^2[(1 - \cos\theta)^2 + \sin^2\theta]\, d\theta^2 = 2a^2(1 - \cos\theta)d\theta = 4a^2 \sin^2(1/2\,\theta)\, d\theta$ (Art. 15).

Then $s = \int \sqrt{dx^2 + dy^2} = \int 2a \sin 1/2\,\theta\, d\theta$. Limits are 0° and 360°.

$$s = -4a \cos 1/2\,\theta \Big|_0^{360°} = 4a + 4a = 8a.$$

(2) Find the volume and surface of the paraboloid, Fig. 79, if $OA = h$, $AB = AD = a$.

The equation of the meridian section OPB is $y^2 = a^2x/h$. Then $V = \pi \int y^2 dx = \pi \int a^2x/h \cdot dx = \pi a^2x^2/2h$, with limits $x = h$, $x = 0$. Hence $V = \pi a^2 h/2$, that is, the area of the base $BDCE$ times half of the height OA.

To find the area of the surface, calculate $ds = \sqrt{1 + (dy/dx)^2}\,dx$. Differentiating $y^2 = a^2x/h$, the result is $2y\,dy/dx = a^2/h$, from which $dy/dx = a^2/2hy$. Hence $ds = \sqrt{1 + a^4/4h^2y^2}\,dx = \sqrt{4h^2y^2 + a^4}\,dx/2hy$.

Then $S = 2\pi\int y ds = \pi/h\int\sqrt{4h^2y^2 + a^4}\,dx = a\pi/h\int\sqrt{4hx + a^2}\,dx = a\pi(4hx + a^2)^{3/2}/6h^2$ (using formula (43), Table 12, $n = 1$). Limits are $x = h$, $x = 0$.

Hence $S = \pi a\,[(4h^2 + a^2)3/2 - a^3]/6h^2$.

Length of arc. End-points (x_1, y_1), (x_2, y_2), in rectangular co-ordinates; or (ρ_1, θ_1), (ρ_2, θ_2), in polar co-ordinates; s = length

$$s = \int\sqrt{dx^2 + dy^2} = \int_{x_1}^{x_2}\sqrt{1 + (dy/dx)^2}\,dx = \int_{y_1}^{y_2}\sqrt{(dx/dy)^2 + 1}\,dy.$$

$$s = \int\sqrt{d\rho^2 + \rho^2 d\theta^2} = \int_{\theta_1}^{\theta_2}\sqrt{(d\rho/d\theta)^2 + \rho^2}\,d\theta = \int_{\rho_1}^{\rho_2}\sqrt{1 + (\rho d\theta/d\rho)^2}\,d\rho.$$

The derivative dy/dx, or $d\rho/d\theta$, must be found from the equation (rectangular or polar) of the curve, and the radical reduced to a function of the variable involved in the differential.

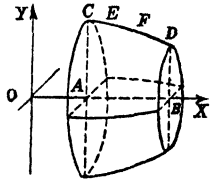

FIG. 80. Solid of revolution.

Volume of a solid of revolution. Axis of revolution OX (Fig. 80); meridian section $y = f(x)$, $x = a$, $x = b$, at extremities of meridian section. $OA = a$, $OB = b$, equation of $CEFD$ is $y = f(x)$, V = volume

$$V = \pi\int_a^b y^2 dx$$

Axis of revolution OY, meridian section $x = h(y)$, $y = c$, $y = d$, at extremities of meridian section.

$$V = \pi\int_c^d x^2 dy.$$

Integration as a summation. A definite integral is the limit of a sum of differential (infinitesimal) elements. Many useful applications of integral calculus depend upon the fundamental theorem: Given a function $f(x)$ continuous in interval from $x = a$ to $x = b$. Let this interval (Fig. 81) be divided into any number (n) of parts of respective lengths $\Delta x_1, \Delta x_2 \ldots, \Delta x_n$. On each of these segments take a point, and let the values of x at these points be $x_1, x_2, \ldots, x_n$, respectively. Then the corresponding values of $f(x)$ are $f(x_1)$, $f(x_2), \ldots, f(x_n)$. Form the sum of the products of each of these values of $f(x)$ by the length of the corresponding segment, namely the sum, $f(x_1)\Delta x_1 + f(x_2)\Delta x_2 + \ldots + f(x_n)\Delta x_n$. Let the number of segments be increased indefinitely so that the length of each approaches zero, then the limiting value of the above sum is the value of the integral of $f(x)dx$ evaluated for limits $x = a$, $x = b$. In the usual notation,

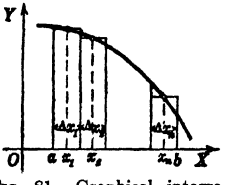

FIG. 81. Graphical integration.

$$\int_a^b f(x)dx = \operatorname*{Limit}_{n=\infty}(f(x_1)\Delta x_1 + f(x_2)\Delta x_2 + \ldots + f(x_n)\Delta x_n).$$

Each term of the sum in the right-hand member is a DIFFERENTIAL ELEMENT. The value of the theorem lies in affording means of calculating the limit of a sum of differential elements of a certain form. The theorem has wide application.

In Fig. 81, the curve is $y = f(x)$; the products $f(x_1)\Delta x_1$, etc., are the areas of rectangles; the sum of the products is approximately the area under the curve, and the limit of the sum is the exact area. But this also equals the definite integral in the left-hand member in the above equation.

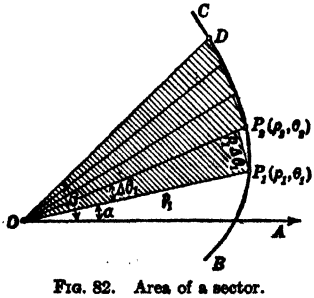

FIG. 82. Area of a sector.

Examples. (1) **Area swept over by radius vector** in Fig. 82 is the limit of the sum of the circular sectors with radii ρ_1, ρ_2, etc., and central angles $\Delta\theta_1$, $\Delta\theta_2$, etc., hence of area $1/2\ \rho_1^2\Delta\theta_1$, $1/2\ \rho_2^2\Delta\theta_2$, etc. (see Art. 13). The fundamental theorem leads at once to the formula (p. 53) $A = 1/2\int\rho^2 d\theta$.

(2) **Volume of solid of revolution about OX** (Fig. 83) may be considered the limit of the sum of circular cylinders with altitudes Δx_1, Δx_2, etc., and base radii y_1, y_2, etc., hence of volumes $\pi y_1^2\Delta x_1$, $\pi y_2^2\Delta x_2$, etc. The fundamental theorem gives immediately $V = \pi\int y^2 dx$ (see p. 53).

(3) Volume of irregular solid. A certain solid answers the following description: the base is an ellipse with semi-axes a, b; plane sections standing on the base and perpendicular to the major axis are squares. Find the volume.

With axes OX, OY in the base (Fig. 84), the equation of the ellipse is $b^2x^2 + a^2y^2 = a^2b^2$, or $y^2 = b^2(a^2 - x^2)/a^2$. Divide the solid into slices of equal infinitesimal thickness Δx by sections perpendicular to OX, and consider these slices trimmed into rectangular blocks such as $PQMN - P'Q'M'N'$.

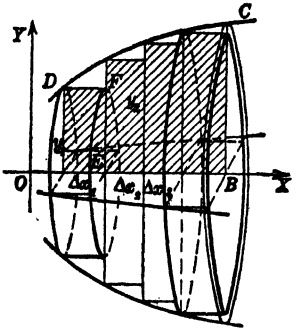

FIG. 83. Volume of solid of revolution.

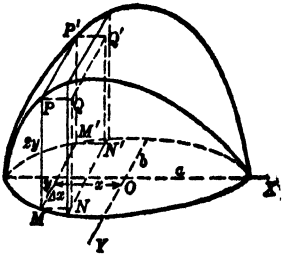

FIG. 84. Ex. 3, p. 55.

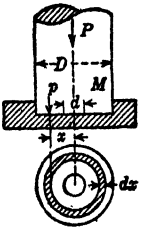

FIG. 85. Thrust bearing.

The co-ordinates of M are (x, y). The volume of this block $= 4y^2\Delta x$. Then the required volume is the limit of the sum of all such blocks when the thickness (Δx) approaches zero. Hence

$$V = \int 4y^2dx = 4\int b^2(a^2 - x^2)/a^2 \cdot dx = 4b^2(a^2x - 1/3x^3)/a^2$$

substituting the value of y^2 from equation of base. The limits are $x = -a$, $x = a$, giving $V = 16ab^2/3$.

(4) Work expended in friction in thrust bearings. A vertical shaft M turns in a bearing (Fig. 85). At a distance x in. from the axis of the shaft let the normal pressure on the bearing due to load P lb. in the direction of the shaft axis be p lb. per sq. in. (unit normal pressure). Then the normal pressure on an infinitesimal ring of radius x and width dx is $p \times 2\pi x\,dx$ (since $2\pi x\,dx$ = the area of the ring). Then the load P must equal the sum of the normal pressures on all such infinitesimal rings, that is, $P = 2\pi\int px\,dx$. Let f = the coefficient of sliding friction. Then the work expended in one revolution in friction on an infinitesimal ring $= fp \times 2\pi x\,dx$ times the circumference of the ring $(2\pi x)$. Hence the total work expended, W, is the sum of the above elements of work for all such rings, that is, $W = 4\pi^2f\int px^2dx$ in.-lb. The relation between W and P is $W = 2\pi fP\int px^2dx \div \int px\,dx$. For a collar bearing the limits are $x = 1/2\,d$, $x = 1/2\,D$. If p is everywhere constant (the usual assumption),

$$W = fP \times 4\pi(D^3 - d^3)/3(D^2 - d^2).$$

(5) Center of gravity. Plane line. Divide the line into infinitesimal parts of length ds, multiply each ds by its perpendicular distance r from a given axis in the plane of the line, add all such products, which gives the STATIC MOMENT M of the line with respect to the axis, or $M = \int r\,ds$. Divide M by the length of the line and the result is the perpendicular distance of the center of gravity C from the given axis. A similar argument holds for plane areas, solids of revolution, etc. The formulas follow. Center of gravity is C.

Plane line. Let $C = (x_0, y_0)$; (x, y) any point on the line; L = length of line; $x_0 = \int x\,ds/L$; $y_0 = \int y\,ds/L$.

Plane area, bounded by a curve and the rectangular axes OX, OY (Fig. 86). $C = (x_0, y_0)$. A = area. (x, y) = any point on the boundary curve. $x_0 = \int xy\,dx/A$; $y_0 = \int xy\,dy/A$.

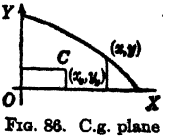

FIG. 86. C.g. plane area.

Solid of revolution. Let OX be the axis of revolution, V = volume, x_0 = distance of C from origin. The equation of the meridian section is $y = f(x)$. $x_0 = \pi\int xy^2dx/V$.

(6) Moment of inertia. The argument is the same as in Ex. 5 above, except that each infinitesimal length is multiplied by r^2. Hence the moment of inertia $I = \int r^2ds$. In the following formulas, the subscript indicates the AXIS OF REFERENCE.

Plane line $I_x = \int y^2ds$; $I_y = \int x^2ds$; (x, y) = any point on line.

Plane areas as in Fig. 86. $I_x = \int y^2x\,dy$; $I_y = \int x^2y\,dx$; (x, y) = any point on boundary curve.

Approximate integration. Evaluation of $\int_a^b f(x)dx$. When a definite integral cannot be worked out by the tables available, an approximate value may be found by one of the following rules:

(1) Expand $f(x)$ into a power series (Art. 22), integrate term by term, and evaluate the new series for the given limits.

(2) Plot the curve $y = f(x)$. The numerical measure of the area between the curve, the X-axis, and the ordinates at $x = a$ and $x = b$ is the value of the integral.

(*a*) Find this area by counting squares of cross-section paper.

(*b*) Use Simpson's Rule, Art. 13.

(*c*) Use a planimeter or integraph (MECHANICAL QUADRATURE). (**16**)

25. DERIVATION OF FORMULAS FOR EXPERIMENTAL DATA

To determine a formula (EMPIRICAL EQUATION) satisfied by given experimental data, when the law obtaining in the experiment is unknown, the data should be plotted on cross-section paper and the equation of a curve to "fit the points" derived. The curve need not pass through all plotted points; derivation of an equation satisfied exactly by the given data is not the object, since such data are subject to errors of determination; a simple formula fulfilling the conditions with a degree of accuracy warranted by the data is the end desired.

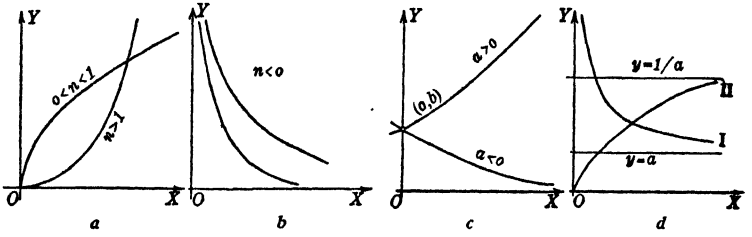

FIG. 87. Type laws.

Acquaintance with several standard curves (Fig. 87) will assist in choosing the formula to be tested. Comparison of the curve suggested by the graph of the given data with these figures will suggest the law to be tried.

Two-constant laws are:

(1) STRAIGHT-LINE LAW:	$y = mx + b$.	
(2) POWER LAW:	$y = ax^n$.	(Fig. 87, items *a*, *b*.)
(3) EXPONENTIAL LAW:	$y = be^{ax}$.	(Fig. 87, item *c*.)
(4) HYPERBOLIC LAWS:	$y = (ax + b)/x$.	(Fig. 87, item *d*, curve I.)
	$y = x/(ax + b)$.	(Fig. 87, item *d*, curve II.)

Straight-line law. Test for a straight-line law may be made with a straight-edge; the test is affirmative when deviations from the straight line are small, some positive and some negative, and curve has no systematic curvature.

Constants in a straight-line formula may be determined by:

1. Selected points. Two points on the plot may be selected such that a straight line drawn through them gives satisfactory distribution of all points. If the corresponding values selected are (x_1, y_1) and (x_2, y_2), solve the simultaneous equations $y_1 = mx_1 + b$ and $y_2 = mx_2 + b$, for the constants m and b, and place these values in the formula $y = mx + b$.

2. Method of averages. Substitute each pair of given values of x and y in the formula $y = mx + b$, thus forming the OBSERVATION EQUATIONS (equal in number to the number of determinations of x, y in the experiment); divide these observation equations into two groups as nearly equal in number as possible; add together all equations of each group to obtain one final equation for each group, and solve these final equations for m and b. Place the resulting values of m and b in the formula $y = mx + b$.

Example. In an experiment with a pulley, the effort E lb. required to raise a load W lb. was found to be as in Table 13.

Solution. (1) A straight line drawn through (30, 6 1/4) and (100, 16 1/2) on rectangular co-ordinates fits the points well. Substituting these values in $y = mx + b$, equations are $6.25 = 30m + b$, $16.5 = 100m + b$. Solving, $m = 0.146$, $b = 1.86$. Hence the law is $E = 0.146W + 1.86$.

(2) Take first 5 observation equations, $3\ 1/4 = 10m + b$, . . ., $9 = 50m + b$, and add them; result is $30\ 7/8 = 150m + 5b$. Taking last 5, namely $10\ 1/2 = 60m + b$, . . . $16\ 1/2 = 100m + b$, and adding, $68 = 400m + 5b$. Solving, $m = 0.148$, $b = 1.72$. Hence result, $E = 0.148W + 1.72$.

Table 13. Data from pulley experiment

W	E	W	E
10	3 1/4	60	10 1/2
20	4 7/8	70	12 1/4
30	6 1/4	80	13 3/4
40	7 1/2	90	15
50	9	100	16 1/2
(150)	(30 7/8)	(400)	(68)
(Totals)			

3. Method of least squares. If the degree of accuracy of the experiment warrants, which is not often the case with engineering data, the method explained in Art. 11 may be used.

Power law. Test for power law $y = ax^n$. If the graph suggests a curve of the type in Fig. 87, item *a* or *b*, the test to apply is to plot the points ($\log x$, $\log y$). If a power law holds, a straight line will fit these points, because from $y = ax^n$, it follows that $\log y = \log a + n \log x$; or, putting $\log y = y'$, $\log a = a'$ and $\log x = x'$, the result is $y' = a' + nx'$ which is the equation of a straight line. The constants n and a' are found as described above; and a comes from $\log a = a'$. Values of a and n placed in $y = ax^n$ will give the desired equation.

Logarithmic cross-section paper, constructed by laying off logarithmic scales (Art. 1) on each of two perpendicular axes with the intersection marked 1 on both, drawing lines through the points of division parallel to the axes, and marking them with their numerical (not logarithmic) values, makes it possible to plot logarithms of data directly, and thus test for a power law without looking up logarithms.

Example. Pressure (p = pounds per square inch) and volume (v = cubic feet) of 1 lb. of saturated steam were measured as in Table 14. Find a law for the data.

Table 14. *P-V* data

v	p
4	110
4.5	97.1
5	86.8
5.5	78.4
6	71.5
7	60.7

Table 14*a*

v'	p'	v'	p'
0.6021	2.0414	0.7404	1.8943
0.6532	1.9872	0.7782	1.8543
0.6990	1.9385	0.8451	1.7832
(1.9543)	(5.9671)	(2.3637)	(5.5318)

Solution. The curve suggested on a rectangular plot is of the type in Fig. 87, item *b*. A test on logarithmic cross-section paper shows that a power law, $p = av^n$, applies. To find the equation, tabulate values of $\log v = v'$ and $\log p = p'$ (Table 14*a*), the relation being $p' = a' + nv'$ ($\log a = a'$), and apply the method of averages (see Table 13).

The averages, substituted in the equations, are, $5.9671 = 3a' + 1.9543n$ and $5.5318 = 3a' + 2.3637n$. Solving, $n = -1.063$, $a' = 0.6925$. $a = 480$. $p = 480v^{-1.063}$, or $pv^{1.063} = 480$.

Exponential law. Test for exponential law $y = be^{ax}$. Plot the experimental points as (x, $\log y$). If a straight line fits these points, an exponential law holds.

To verify this statement, take logarithms of both members of the equation, which gives $\log y = \log b + ax \log e$. Putting $\log y = y'$, $\log b = b'$, $a \log e = a'$, the result is $y' = b' + a'x$, which is the equation of a straight line.

Semi-logarithmic cross-section paper is constructed by laying off a logarithmic scale (Art. 1) from the origin on one axis of co-ordinates, and drawing lines through points of division parallel to the other axis. Draw equidistant lines parallel to the first axis. Points (x, $\log y$) can be plotted quickly on such paper without determination of the actual logarithms, and testing the data for an exponential law is thus expedited.

Hyperbolic laws. Equation $y = (ax + b)/x$ may be written $xy = ax + b$. Hence points (x, xy) lie on a straight line. Equation $y = x/(ax + b)$ is the same as $x/y = ax + b$, and therefore the points (x, x/y) lie on a straight line.

Three-constant laws are:

(5) $y = a + bx + cx^2$ (PARABOLIC LAW), (7) $y = ax^n + c$,

(6) $\log y = a + bx + cx^2$, (8) $y = be^{ax} + c$.

When given values of x differ by a constant increment Δx (Art. 20), points (x, Δy) will follow a straight-line law if Eq. 5 applies, and points (x, $\Delta \log y$), if Eq. 6 holds. Curves

for Eqs. 7 and 8 differ from Fig. 87, items *a*, *b*, and *c*, respectively, only in the position of the X-axis. (Line $y - c = 0$ has the same relation to the curves as the X-axis in the figures named.) Value of c can often be found by trial and y replaced by $y - c$ in the methods explained above. **(16, 17, 18.)**

26. CHARTS FOR EMPIRICAL FORMULAS

The following material deals with methods of so treating formulas involving several variables that corresponding values of these variables can be read immediately from a chart. The methods possess wide application.

Notation. The variables are denoted by z, z_1, z_2, z_3, etc., and functions $f(z)$, $f(z_1)$, $F(z_1)$, $g(z_2)$, etc., of them by f, f_1, F_1, g_2, etc.

Function scales. The logarithmic scale (Art. 1) is a simple example of a function scale. In general, to construct a function scale for $f(z)$, lay off on a line a uniform scale of lengths with decimal subdivisions, calculate $f(z)$ for a number of values of z occurring in the given problem, lay off these values on the scale of lengths, and inscribe at each point thus located the corresponding value of z. If values of $f(z)$ are denoted by x, then $x = f(z)$ is called the equation of the function scale. In practice a SCALE FACTOR m (a constant) is introduced, *i.e.*, the equation of the scale is written $x = mf(z)$. The value of the scale factor in any given case is found as follows:

Example. Required a scale 10 in. long for $\log z$ when z varies from 0.01 to 100. *Solution.* Values of $\log z$ run from -2 to 2, a range of 4 units. Since $10/4 = 2.5$, the equation of the scale is $x = 2.5 \log z$. Generally, if the length of the scale is L in. and the range of values of the function is Z units, $m = L/Z$. Only a limited number of values of z appear on the scale; division marks indicate intermediate values. The subdivisions of the uniform scale of lengths may be retained when readings of values of $f(z)$ are desired. The function scales for $m\,f(z)$ and $m\,f(z) + c$ (c = a constant) are identical; the addition of a constant simply shifts the scale constructed for $m\,f(z)$ along the scale of lengths. If values of $f(z)$ are large, either a scale for $m\,f(z)$, where m is small, may be constructed or a scale for $f(z) - c$, where c is large. The function scales thus far discussed, being laid off on a straight line, are called STRAIGHT SCALES.

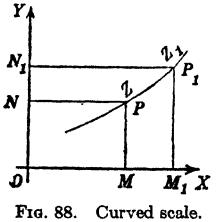

FIG. 88. Curved scale.

Curved scales. Let the straight scales $x = f(z)$ and $y = g(z)$ be constructed on perpendicular axes. Let M and N (Fig. 88) be points with the same value of z. Plot $x = OM$, $y = ON$. Again, let z have the same value z_1 at M_1, N_1. Plot P_1. Draw a smooth curve through all such points, and mark at each point corresponding values of z. The result is a CURVED SCALE. Equations $x = f(z)$, $y = g(z)$ are parametric equations of the curve. (Art. 18.) An indefinite number of curved scales may be constructed on any curve, corresponding to different parametric equations for that curve.

Charts with a Network of Lines

Three variables. From the explanation below it will appear that the object is to construct three systems of curves such that corresponding values of the variables are attached to three curves through a common point. In the examples given, such a system of curves is composed of straight lines and is easily constructed. In other cases the labor involved is so great that another type of chart is preferred. (See ***Alignment Charts.***)

Type 1. $f_3 = f_1 + f_2$. On perpendicular axes OX, OY (Fig. 89) construct the scales $x = m_1 f_1$, $y = m_2 f_2$, and draw a network of parallels to the axes through the points of division. Construct the system of parallel lines $y = m_2 x/m_1 + m_2 f_3$ which result by assigning to z_3 the values used in the problem, and mark on each line the corresponding value of z_3, called the PARAMETER of the system. The values of z_1, z_2, z_3 attached to any three lines in the diagram through a point will satisfy the equation. From the given data it may be desirable to use the scales $x = m_1 f_1 + c_1$, $y = m_2 f_2 + c_2$. Parallel lines are now $y = m_2(x - c_1)/m_1 + m_2 f_3 + c_2$. In practice such constants are usually introduced. See Ex. 1 below.

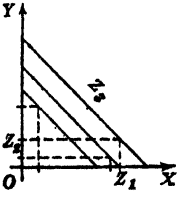

FIG. 89. Parallel-line chart (3-variable).

Type 2. $f_3 = f_1 f_2$. Construct scales $x = m_1 f_1$, $y = m_2 f_2$ as in Type 1, and the system of lines $y = m_2 f_3 x/m_1$ intersecting at $O(x = 0, y = 0)$. (Fig. 90.) If MP and NP are drawn through the extremities of the scales on OX and OY, the values of z_3 may be conveniently written along these lines.

If the scales $x = m_1f_1 + c_1$, $y = m_2f_2 + c_2$ are used, the system of lines is $y - c_2 = m_2f_3(x - c_1)/m_1$, passing through (c_1, c_2). Transforming $f_2 = f_1f_3$ by taking logarithms gives $\log f_2 = \log f_1 + \log f_3$, which is in the form of Type 1.

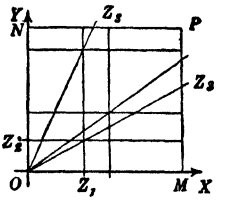

FIG. 90. Radiating-line chart (3-variable).

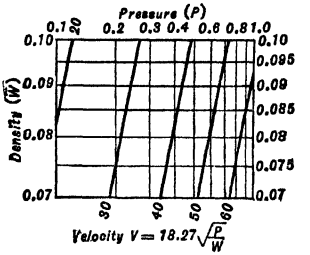

FIG. 91. Pitot-tube chart (parallel).

Example 1. Fig. 91 is a chart for $V = 18.27\sqrt{P/W}$, the formula for measurement of velocity of air by a Pitot tube. Taking logarithms and transposing, $\log W = \log P - 2 \log (V/18.27)$, which is Type 1. The scales used are $y = 25 \log 10W$, $x = 5 \log 10P$. The system of parallel lines is $y = 5x - 50 \log (V/18.27)$. Values of V are marked on the ends of the lines. This example illustrates logarithmic transformation of a given formula to bring it under Type 1.

Example 2. The preceding equation may be written $P = 0.003 Wv^2$, and then comes under Type 2. Fig. 92 shows a chart, with scales $y = 5P$, $x = 100W$, and lines $y/x = 0.00015\ v^2$. Equations of the bounding vertical lines are $x = 6$, $x = 10$; of the bounding horizontal lines, $y = 0.5$, $y = 5$. Uniform scales are laid off on these lines. The system of lines for v may be plotted by calculating the points of intersection with the bounding lines, or also, by drawing lines through $x = 0$, $y = 0$, which is in this case a point off the chart.

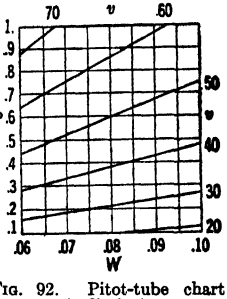

FIG. 92. Pitot-tube chart (radiating).

Four variables. Extensions of the preceding methods are shown in Fig. 93.

Type 3. $f_1 + f_2 = f_3 + f_4$. (Fig. 93, item *a*.) Construct the function scales $x = m_1f_1 + c_1$ on OM, $x' = m_3f_3 + c_3$ on PQ, and two systems of parallel lines, (1) $y = m(x - c_1)/m_1 + mf_2$, with parameter $z_2(AB$, etc.); (2) $y = m(x' - c_3)/m_3 + mf_4$, with parameter $z_4(CD$, etc.). Corresponding values of z_1, z_2, z_3, z_4 are determined as indicated in the figure.

Type 4. $f_1f_2 = f_3 + f_4$. (Fig. 93, item *b*.) Construct function scales $x = m_1f_1 + c_1$ on OM, $x' = m_3f_3 + c_3$ on PQ, and two systems of lines, (1) $y = mf_2(x - c_1)/m_1$, with parameter z_2 (lines through $O(c_1, 0)$, OA, etc.), (2) $y = m(x' - c_3)/m_3 + mf_4$, with parameter z_4 (parallel lines CD, etc.). Corresponding values of z_1, z_2, z_3, z_4 are indicated in the figure.

Type 5. $f_1f_2 = f_3f_4$. (Fig. 93, item *c*.) Construct function scales $x = m_1f_1 + c_1$ on OM, $x' = m_3f_3 + a$ on PQ, $(OM = a)$, and two systems of lines; (1) $y = mf_2(x - c_1)/m_1$,

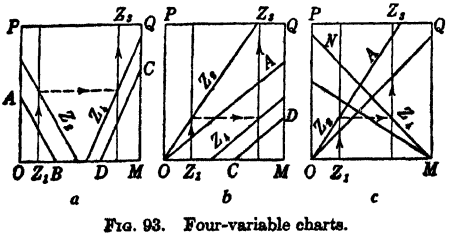

FIG. 93. Four-variable charts.

with parameter z_2 (lines through $O(c_1, 0)$), and (2) $y = mf_4(x' - a)/m_3$, with parameter z_4 (lines through M). Corresponding values of z_1, z_2, z_3, z_4 appear in the figure.

Example 1. Fig. 94 shows a portion of a chart for $N_s = \text{R.P.M.}\ \sqrt{\text{H.P.}}/h^{5/4}$, which is the formula for the specific speed (N_s) for impulse and reaction water wheels. Taking logarithms, $\log N_s = 1/2 \log$

H.P. = log R.P.M. − 5/4 log h. This comes under Type 3. The scales are $y = 3.3 \log 0.001$ H.P., $y' = -3.3 \log 0.01\ h$, both of which are laid off on the line $x = 3 \log 3$. The systems of parallel lines are $4.4x - 5y' = 13.2 \log 0.3$ R.P.M., $2.2x + y = 6.6 \log 3N_s$. The Y-axis is off the chart. For lines

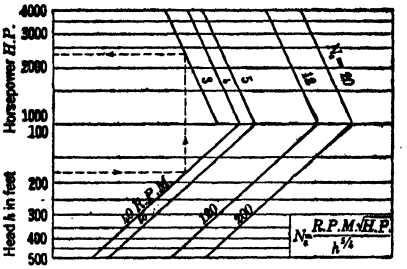

FIG. 94. Specific speeds for impulse water wheels.

of the two systems intersecting on the X-axis (horizontal line in figure through $h = 100$), R.P.M. = $10N_s$.

Example 2. Fig. 95 shows the lower part of a chart for T.E. = $0.85d^2\ PS/D$, which is the formula for the tractive effort of a simple two-cylinder locomotive, with boiler pressure $P = 200$ lb./in.^{2} The formula may be written $170\ d^2\ S$ = T.E. × D, and comes under Type 5. The scales are $x = 0.0085\ d^2$, $x' = 12 - 0.75\ T/10{,}000$, both laid off on horizontal lines. The two systems of lines are (1) $y = Sx/30$, (2) $y = D(12 - x')/45$.

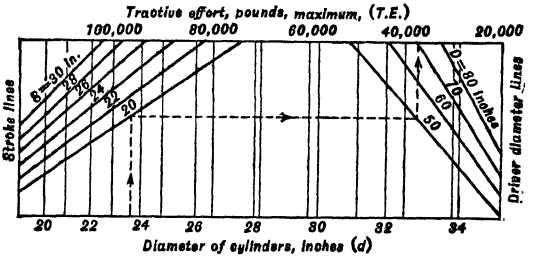

FIG. 95. Tractive effort of a locomotive.

Alignment charts. For many formulas in engineering it is possible to construct function scales in such a way that readings on them at points on one or more lines will satisfy the formula. Many of these charts are simple and easily constructed. Alignment charts for Types 1 to 5 above are given below.

Type 6. $f_1 + f_2 = f$. (Fig. 96, item *a*.) Scales for m_1f_1, m_2f_2, mf are constructed on parallel axes with the conditions $m_1/m_2 = a/b$, $m = m_1m_2/(m_1 + m_2)$, and adjusted so

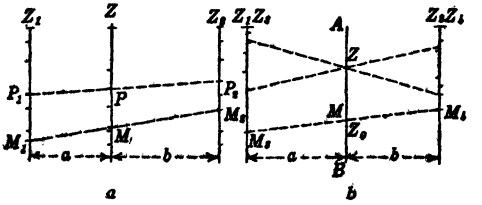

FIG. 96. Construction of alignment charts, Types 6, 7.

that readings at M_1, M, M_2 will satisfy the equation. Then readings at any three points P_1, P, P_2, in line, will also satisfy the formula.

Type 7. $f_1 + f_2 = f_3 + f_4$. (Fig. 96, item *b*.) Scales for m_1f_1, m_2f_2 are constructed on one axis and scales for m_3f_3, m_4f_4 on a parallel axis, with $m_1 = m_3$, $m_2 = m_4$. A third axis AB is then drawn so that $m_1/m_2 = a/b$. Set $f_1 + f_2 = z$ and $f_3 + f_4 = z$. Chart the first of these equations as in Type 6, and compute $z(= z_0)$ at some point as M. No scale for z on AB need be constructed. Chart the second equation, adjusting the scales for

m_3f_3, m_4f_4 so that readings at M_3, $M(z_0)$, M_4 on a line $M_3M\,M_4$ will correspond. If any two lines intersect on AB, readings for z_1, z_2, on one line, and z_3, z_4, on the other line, will satisfy the equation.

Example. Fig. 97 is a chart for $N_c = 1{,}550{,}000\,d^2/W^{1/2}l^{3/2}$, which is a formula for the determination of the critical speed of a shaft when the load is concentrated midway between the bearings. Taking logarithms, $\log N_c + 1/2 \log W - \log 1{,}550{,}000 = 2 \log d - 3/2 \log l$, which is the form of Type 7. Scales are laid off for 10 log d, and 3.75 log l with $m_3/m_4 = -2$, hence with axis AB to the right. The line through $d = 1$, $l = 1$ cuts AB in $z = 0$. For N_c, the scale is 5 log N_c. The line joining $N_c = 15{,}500$ and $z = 0$ must cut the W-scale at $W = 10{,}000$. The scale for W is $-1.25 \log W$.

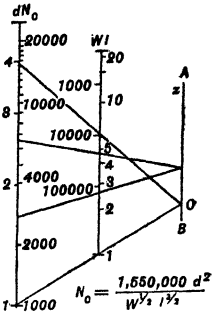

FIG. 97. Critical speed of a shaft with center-concentrated load.

Type 8. $f = f_1/f_2$. (Fig. 98, item *a*.) Construct scales for m_1f_1, $-m_2f_2$ on parallel axes, and adjust these so that line AB drawn from $A(f_1 = 0)$ to $B(f_2 = 0)$ makes a convenient angle with AM (usually 45°). On AM construct a scale for $x = am_1f/(m_2 + m_1f)$. Project these graduations on to AB by lines parallel to the axes, and mark at these points on AB the same values for z as on AM. Values of z_1, z, z_2 on any transversal will satisfy the equation. This type is called a *Z*-chart.

Type 9. $f_1/f_2 = f_3/f_4$. (Fig. 98, item *b*.) Construct scales for m_1f_1, $-m_2f_2$, m_3f_3, $-m_4f_4$, with $m_1/m_2 = m_3/m_4$, on axes as indicated, with $f_1 = f_3 = 0$ at A, $f_2 = f_4 = 0$ at B. Transversals intersecting on diagonal AB will cut the scales in corresponding values of z_1, z_2, z_3, z_4.

Type 10. $f_1 + f_2 = f_3/f_4$. (Fig. 98, item *c*.) Lay off scales for m_1f_1, m_3f_3 on AM starting at A $(f_1 = f_3 = 0)$, scale for m_4f_4 on AB from A $(f_4 = 0)$, scale downward for m_2f_2 from B $(f_2 = 0)$ on BQ, with $m_1 = m_2$, and $m_3/m_4 = m_1/AB$. Parallel index lines will cut the scales in corresponding values of the variables, z_3, z_4, on one line, and z_1, z_2, on the other.

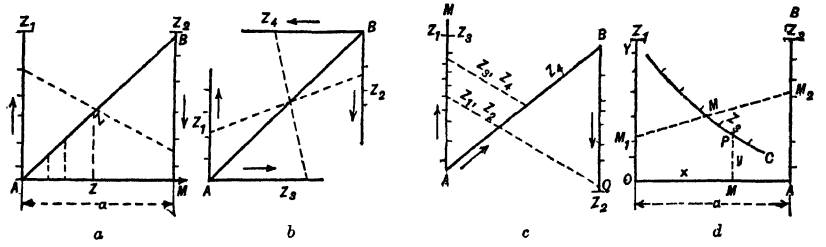

FIG. 98. Construction of alignment charts, Types 8 to 11.

Type 11. $f_1 + f_2f_3 = F_3$. (Fig. 98, item *d*.) This type brings in a curved scale. (Fig. 88.) Construct the scales $y_1 = OM_1 = m_1f_1 + c_1$, $y_2 = AM_2 = m_2f_2 + c_2$, and the curved scale $x = OM = am_1f_3/(m_2 + m_1f_3)$, $y = MP = (m_1m_2F_3 + m_2c_1 + m_1c_2f_3)/(m_2 + m_1f_3)$, on the curve C. Readings on any transversal $M_1M\,M_2$ will satisfy the equation.

For other types, some of which are extensions of the preceding, see **(16, 17, 18, 19)**.

BIBLIOGRAPHY

(1) A good presentation of computation, errors, etc., is given by Langley, *A treatise on computation* (Longmans). (2) A short list follows. Wentworth and Smith, *Trigonometric and logarithmic tables, five places* (Ginn & Co.); *Wiley trigonometric tables, five places* (Wiley & Sons); Marsh, *Interpolated six-place tables of the logarithms of numbers* (Wiley & Sons); Hutton, *Mathematical tables, seven places* (London); Ives, *Seven-place natural trigonometrical functions* (Wiley & Sons). (3) A good explanation of the slide rule with numerous problems is given by Keal, Phelps, and Leonard, *The slide rule* (Wiley & Sons). See also pamphlets published by manufacturers, for example, Cox, *The Mannheim slide rule* (Keuffel & Esser Co.). Many other types of slide rules are on the market, some of which are designed for the solution of special problems. For illustrations and descriptions of these as well as a great variety of calculating machines see *Methods of calculation, a handbook of the Exhibition at the Napier Tercentenary Celebration* (G. Bell & Sons, London). (4) For an excellent text-

book on elementary algebra see Hawkes, Luby, and Touton, *Complete school algebra* (Ginn & Co.); (5) Hawkes, *Advanced algebra* (Ginn & Co.); Hall and Knight, *Higher algebra* (Macmillan Co.); Wentworth, *College algebra* (Ginn & Co.). (6) Merriman, *The method of least squares* (Wiley & Sons). (7) A good presentation of financial arithmetic is given in Skinner, *The mathematical theory of investment* (Ginn & Co.). (8) Hoover, *Principles of mining* (Hill Publishing Co.). (9) Inwood's *Tables of interest*, etc. (London). (10) Wentworth and Smith, *Plane and spherical trigonometry and tables* (Ginn & Co.). (11) Moritz, *Elements of plane trigonometry* (Ginn & Co.). (12) Lehmann, *Analytic geometry* (Wiley & Sons). (13) Siceloff, Wentworth, and Smith, *New analytic geometry* (Ginn & Co.). (14) Granville, *Differential and integral calculus (revised)* (Ginn & Co.). (15) Neeley and Tracey, *Differential and integral calculus* (Macmillan Co.). (16) For explanation of the underlying theory of mechanical quadrature and description of various types of planimeters and the integraph see Lipka, *Graphical and mechanical computation* (Wiley & Sons), p. 246. (17) Saxelby, *Practical mathematics* (Longmans); Running, *Empirical formulas* (Wiley & Sons); Mackey, *Graphical solutions* (Wiley & Sons); (18) d'Ocagne, *Traité de nomographie* (Paris); (19) Swett, *The construction of alignment charts* (Wiley & Sons). (20) For squares, cubes, square roots, cube roots, and reciprocals to 10 significant figures see Barlow, *New mathematical tables* (London). (21) More extensive tables are *Smithsonian tables, Hyperbolic functions* (Washington, 1909).

SECTION 22

TABLES

MATHEMATICAL TABLES

BY

PERCEY F. SMITH

MISCELLANEOUS TABLES

BY

EDITOR

TABLE		PAGE
	MATHEMATICAL TABLES	
1.	Squares	02
2.	Cubes	04
3.	Square roots	06
4.	Cube roots	10
5.	Three-halves powers	14
6.	Fifth powers	15
7.	Five-halves powers	15
8.	Fifth roots and two-fifths powers	15
9.	Reciprocals of numbers	16
10.	Circles, circumferences and areas (hundredths)	18
11.	Circles, circumferences and areas (eighths)	23
12.	Circular segments	24
13.	Spheres, areas and volumes	26
14.	Degrees to radians	32
15.	Minutes to radians	32
16.	Decimal parts of a degree to minutes	32
17.	Radians to degrees and minutes	33
18.	Natural sines and cosines	34
19.	Natural tangents and cotangents	36
20.	Mantissas of common logarithms	38
21.	Numerical constants	41
22.	Cologarithms	42
23.	Antilogarithms	44
24.	Logarithmic sines and cosines	46
25.	Logarithmic tangents and cotangents	48
26.	Exponentials	50
27.	Hyperbolic functions	51
28.	Napierian logarithms	52
29.	Napierian logarithms of powers of 10	53
30.	Compound interest	54
31.	Compound discount	55
32.	Annuities, amount	56
33.	Annuities, present value	57
34.	Sinking fund	58
	MISCELLANEOUS TABLES	
35.	Pressure equivalents	59
36.	Equivalents of energy, work and heat	59
37.	Equivalent parts of feet, inches, and millimeters	60
38.	Equivalents of power, rate of energy and heat	62
39.	Equivalents of linear measure	62
40.	Equivalents of surfaces and areas	63
41.	Capacity equivalents	63
42.	Equivalent forces or weights per unit of volume	63
43.	Equivalents of masses and weights	64
44.	Miscellaneous equivalents	64
45.	Atomic weights	66
46.	Composition and specific gravity of minerals	67
47.	Abbreviations used in text	72
48.	Abbreviations used in literature citations	74

Table 1. Squares of numbers *a*

N	0	1	2	3	4	5	6	7	8	9	Prop. parts				
											1	2	3	4	5
1.0	**1.000**	**1.020**	**1.040**	**1.061**	**1.082**	**1.102**	**1.124**	**1.145**	**1.166**	**1.188**	**2**	**4**	**6**	**8**	**11**
1.1	1.210	1.232	1.254	1.277	1.300	1.322	1.346	1.369	1.392	1.416	2	5	7	9	12
1.2	1.440	1.464	1.488	1.513	1.538	1.562	1.588	1.613	1.638	1.664	3	5	8	10	13
1.3	1.690	1.716	1.742	1.769	1.796	1.822	1.850	1.877	1.904	1.932	3	5	8	11	14
1.4	1.960	1.988	2.016	2.045	2.074	2.102	2.132	2.161	2.190	2.220	3	6	9	12	15
1.5	2.250	2.280	2.310	2.341	2.372	2.402	2.434	2.465	2.496	2.528	3	6	9	12	16
1.6	2.560	2.592	2.624	2.657	2.690	2.722	2.756	2.789	2.822	2.856	3	7	10	13	17
1.7	2.890	2.924	2.958	2.993	3.028	3.062	3.098	3.133	3.168	3.204	4	7	11	14	18
1.8	3.240	3.276	3.312	3.349	3.386	3.422	3.460	3.497	3.534	3.572	4	7	11	15	19
1.9	3.610	3.648	3.686	3.725	3.764	3.802	3.842	3.881	3.920	3.960	4	8	12	16	20
2.0	**4.000**	**4.040**	**4.080**	**4.121**	**4.162**	**4.202**	**4.244**	**4.285**	**4.326**	**4.368**	**4**	**8**	**12**	**16**	**21**
2.1	4.410	4.452	4.494	4.537	4.580	4.622	4.666	4.709	4.752	4.796	4	9	13	17	22
2.2	4.840	4.884	4.928	4.973	5.018	5.062	5.108	5.153	5.198	5.244	5	9	14	18	23
2.3	5.290	5.336	5.382	5.429	5.476	5.522	5.570	5.617	5.664	5.712	5	9	14	19	24
2.4	5.760	5.808	5.856	5.905	5.954	6.002	6.052	6.101	6.150	6.200	5	10	15	20	25
2.5	6.250	6.300	6.350	6.401	6.452	6.502	6.554	6.605	6.656	6.708	5	10	15	20	26
2.6	6.760	6.812	6.864	6.917	6.970	7.022	7.076	7.129	7.182	7.236	5	11	16	21	27
2.7	7.290	7.344	7.398	7.453	7.508	7.562	7.618	7.673	7.728	7.784	6	11	17	22	28
2.8	7.840	7.896	7.952	8.009	8.066	8.122	8.180	8.237	8.294	8.352	6	11	17	23	29
2.9	8.410	8.468	8.526	8.585	8.644	8.702	8.762	8.821	8.880	8.940	6	12	18	24	30
3.0	**9.000**	**9.060**	**9.120**	**9.181**	**9.242**	**9.302**	**9.364**	**9.425**	**9.486**	**9.548**	**6**	**12**	**18**	**24**	**31**
3.1	9.610	9.672	9.734	9.797	9.860	9.922	9.986	10.049	.....	.....	6	13	19	25	32
3.1	.....	.....	.....	.....	.....	.....	.....	10.05	10.11	10.18	1	1	2	3	3
3.2	10.24	10.30	10.37	10.43	10.50	10.56	10.63	10.69	10.76	10.82	1	1	2	3	3
3.3	10.89	10.96	11.02	11.09	11.16	11.22	11.29	11.36	11.42	11.49	1	1	2	3	3
3.4	11.56	11.63	11.70	11.76	11.83	11.90	11.97	12.04	12.11	12.18	1	1	2	3	3
3.5	12.25	12.32	12.39	12.46	12.53	12.60	12.67	12.74	12.82	12.89	1	1	2	3	4
3.6	12.96	13.03	13.10	13.18	13.25	13.32	13.40	13.47	13.54	13.62	1	1	2	3	4
3.7	13.69	13.76	13.84	13.91	13.99	14.06	14.14	14.21	14.29	14.36	1	2	2	3	4
3.8	14.44	14.52	14.59	14.67	14.75	14.82	14.90	14.98	15.05	15.13	1	2	2	3	4
3.9	15.21	15.29	15.37	15.44	15.52	15.60	15.68	15.76	15.84	15.92	1	2	2	3	4
4.0	**16.00**	**16.08**	**16.16**	**16.24**	**16.32**	**16.40**	**16.48**	**16.56**	**16.65**	**16.73**	**1**	**2**	**2**	**3**	**4**
4.1	16.81	16.89	16.97	17.06	17.14	17.22	17.31	17.39	17.47	17.56	1	2	2	3	4
4.2	17.64	17.72	17.81	17.89	17.98	18.06	18.15	18.23	18.32	18.40	1	2	3	3	4
4.3	18.49	18.58	18.66	18.75	18.84	18.92	19.01	19.10	19.18	19.27	1	2	3	3	4
4.4	19.36	19.45	19.54	19.62	19.71	19.80	19.89	19.98	20.07	20.16	1	2	3	4	4
4.5	20.25	20.34	20.43	20.52	20.61	20.70	20.79	20.88	20.98	21.07	1	2	3	4	5
4.6	21.16	21.25	21.34	21.44	21.53	21.62	21.72	21.81	21.90	22.00	1	2	3	4	5
4.7	22.09	22.18	22.28	22.37	22.47	22.56	22.66	22.75	22.85	22.94	1	2	3	4	5
4.8	23.04	23.14	23.23	23.33	23.43	23.52	23.62	23.72	23.81	23.91	1	2	3	4	5
4.9	24.01	24.11	24.21	24.30	24.40	24.50	24.60	24.70	24.80	24.90	1	2	3	4	5
5.0	**25.00**	**25.10**	**25.20**	**25.30**	**25.40**	**25.50**	**25.60**	**25.70**	**25.81**	**25.91**	**1**	**2**	**3**	**4**	**5**
5.1	26.01	26.11	26.21	26.32	26.42	26.52	26.63	26.73	26.83	26.94	1	2	3	4	5
5.2	27.04	27.14	27.25	27.35	27.46	27.56	27.67	27.77	27.88	27.98	1	2	3	4	5
5.3	28.09	28.20	28.30	28.41	28.52	28.62	28.73	28.84	28.94	29.05	1	2	3	4	5
5.4	29.16	29.27	29.38	29.48	29.59	29.70	29.81	29.92	30.03	30.14	1	2	3	4	6

a Corrections to be *added* for a fourth figure 1, 2, 3, 4, 5 are given in right-hand columns. For a fourth figure 6, 7, 8, 9, take the tabular entry for the next larger number of three figures and *subtract* the correction given for 4, 3, 2, 1, respectively.

If decimal point is moved *one* place in N, move it *two* places in the tabular number.

Table 1. Squares of numbers—*Continued*

N	0	1	2	3	4	5	6	7	8	9	Prop. parts				
											1	2	3	4	5
5.5	30.25	30.36	30.47	30.58	30.69	30.80	30.91	31.02	31.14	31.25	1	2	3	4	6
5.6	31.36	31.47	31.58	31.70	31.81	31.92	32.04	32.15	32.26	32.38	1	2	3	5	6
5.7	32.49	32.60	32.72	32.83	32.95	33.06	33.18	33.29	33.41	33.52	1	2	3	5	6
5.8	33.64	33.76	33.87	33.99	34.11	34.22	34.34	34.46	34.57	34.69	1	2	4	5	6
5.9	34.81	34.93	35.05	35.16	35.28	35.40	35.52	35.64	35.76	35.88	1	2	4	5	6
6.0	**36.00**	**36.12**	**36.24**	**36.36**	**36.48**	**36.60**	**36.72**	**36.84**	**36.97**	**37.09**	**1**	**2**	**4**	**5**	**6**
6.1	37.21	37.33	37.45	37.58	37.70	37.82	37.95	38.07	38.19	38.32	1	2	4	5	6
6.2	38.44	38.56	38.69	38.81	38.94	39.06	39.19	39.31	39.44	39.56	1	3	4	5	6
6.3	39.69	39.82	39.94	40.07	40.20	40.32	40.45	40.58	40.70	40.83	1	3	4	5	6
6.4	40.96	41.09	41.22	41.34	41.47	41.60	41.73	41.86	41.99	42.12	1	3	4	5	6
6.5	42.25	42.38	42.51	42.64	42.77	42.90	43.03	43.16	43.30	43.43	1	3	4	5	7
6.6	43.56	43.69	43.82	43.96	44.09	44.22	44.36	44.49	44.62	44.76	1	3	4	5	7
6.7	44.89	45.02	45.16	45.29	45.43	45.56	45.70	45.83	45.97	46.10	1	3	4	5	7
6.8	46.24	46.38	46.51	46.65	46.79	46.92	47.06	47.20	47.33	47.47	1	3	4	5	7
6.9	47.61	47.75	47.89	48.02	48.16	48.30	48.44	48.58	48.72	48.86	1	3	4	5	7
7.0	**49.00**	**49.14**	**49.28**	**49.42**	**49.56**	**49.70**	**49.84**	**49.98**	**50.13**	**50.27**	**1**	**3**	**4**	**6**	**7**
7.1	50.41	50.55	50.69	50.84	50.98	51.12	51.27	51.41	51.55	51.70	1	3	4	6	7
7.2	51.84	51.98	52.13	52.27	52.42	52.56	52.71	52.85	53.00	53.14	1	3	4	6	7
7.3	53.29	53.44	53.58	53.73	53.88	54.02	54.17	54.32	54.46	54.61	1	3	4	6	7
7.4	54.76	54.91	55.06	55.20	55.35	55.50	55.65	55.80	55.95	56.10	1	3	4	6	7
7.5	56.25	56.40	56.55	56.70	56.85	57.00	57.15	57.30	57.46	57.61	2	3	5	6	8
7.6	57.76	57.91	58.06	58.22	58.37	58.52	58.68	58.83	58.98	59.14	2	3	5	6	8
7.7	59.29	59.44	59.60	59.75	59.91	60.06	60.22	60.37	60.53	60.68	2	3	5	6	8
7.8	60.84	61.00	61.15	61.31	61.47	61.62	61.78	61.94	62.09	62.25	2	3	5	6	8
7.9	62.41	62.57	62.73	62.88	63.04	63.20	63.36	63.52	63.68	63.84	2	3	5	6	8
8.0	**64.00**	**64.16**	**64.32**	**64.48**	**64.64**	**64.80**	**64.96**	**65.12**	**65.29**	**65.45**	**2**	**3**	**5**	**6**	**8**
8.1	65.61	65.77	65.93	66.10	66.26	66.42	66.59	66.75	66.91	67.08	2	3	5	7	8
8.2	67.24	67.40	67.57	67.73	67.90	68.06	68.23	68.39	68.56	68.72	2	3	5	7	8
8.3	68.89	69.06	69.22	69.39	69.56	69.72	69.89	70.06	70.22	70.39	2	3	5	7	8
8.4	70.56	70.73	70.90	71.06	71.23	71.40	71.57	71.74	71.91	72.08	2	3	5	7	8
8.5	72.25	72.42	72.59	72.76	72.93	73.10	73.27	73.44	73.62	73.79	2	3	5	7	9
8.6	73.96	74.13	74.30	74.48	74.65	74.82	75.00	75.17	75.34	75.52	2	3	5	7	9
8.7	75.69	75.86	76.04	76.21	76.39	76.56	76.74	76.91	77.09	77.26	2	4	5	7	9
8.8	77.44	77.62	77.79	77.97	78.15	78.32	78.50	78.68	78.85	79.03	2	4	5	7	9
8.9	79.21	79.39	79.57	79.74	79.92	80.10	80.28	80.46	80.64	80.82	2	4	5	7	9
9.0	**81.00**	**81.18**	**81.36**	**81.54**	**81.72**	**81.90**	**82.08**	**82.26**	**82.45**	**82.63**	**2**	**4**	**5**	**7**	**9**
9.1	82.81	82.99	83.17	83.36	83.54	83.72	83.91	84.09	84.27	84.46	2	4	5	7	9
9.2	84.64	84.82	85.01	85.19	85.38	85.56	85.75	85.93	86.12	86.30	2	4	6	7	9
9.3	86.49	86.68	86.86	87.05	87.24	87.42	87.61	87.80	87.98	88.17	2	4	6	7	9
9.4	88.36	88.55	88.74	88.92	89.11	89.30	89.49	89.68	89.87	90.06	2	4	6	8	9
9.5	90.25	90.44	90.63	90.82	91.01	91.20	91.39	91.58	91.78	91.97	2	4	6	8	10
9.6	92.16	92.35	92.54	92.74	92.93	93.12	93.32	93.51	93.70	93.90	2	4	6	8	10
9.7	94.09	94.28	94.48	94.67	94.87	95.06	95.26	95.45	95.65	95.84	2	4	6	8	10
9.8	96.04	96.24	96.43	96.63	96.83	97.02	97.22	97.42	97.61	97.81	2	4	6	8	10
9.9	98.01	98.21	98.41	98.60	98.80	99.00	99.20	99.40	99.60	99.80	2	4	6	8	10

Table 2. Cubes of numbers *a*

N	0	1	2	3	4	5	6	7	8	9	Prop. parts 1	2	3	4	5
1.0	**1.000**	**1.030**	**1.061**	**1.093**	**1.125**	**1.158**	**1.191**	**1.225**	**1.260**	**1.295**					
1.1	1.331	1.368	1.405	1.443	1.482	1.521	1.561	1.602	1.643	1.685					
1.2	1.728	1.772	1.816	1.861	1.907	1.953	2.000	2.048	2.097	2.147					
1.3	2.197	2.248	2.300	2.353	2.406	2.460	2.515	2.571	2.628	2.686					
1.4	2.744	2.803	2.863	2.924	2.986	3.049	3.112	3.177	3.242	3.308					
1.5	3.375	3.443	3.512	3.582	3.652	3.724	3.796	3.870	3.944	4.020					
1.6	4.096	4.173	4.252	4.331	4.411	4.492	4.574	4.657	4.742	4.827					
1.7	4.913	5.000	5.088	5.178	5.268	5.359	5.452	5.545	5.640	5.735					
1.8	5.832	5.930	6.029	6.128	6.230	6.332	6.435	6.539	6.645	6.751					
1.9	6.859	6.968	7.078	7.189	7.301	7.415	7.530	7.645	7.762	7.881					
2.0	**8.000**	**8.121**	**8.242**	**8.365**	**8.490**	**8.615**	**8.742**	**8.870**	**8.999**	**9.129**					
2.1	9.261	9.394	9.528	9.664	9.800	9.938	10.078	.....	.....	.....					
2.1	.....	.....	.....	.....	.....	.....	10.08	10.22	10.36	10.50	1	3	4	6	7
2.2	10.65	10.79	10.94	11.09	11.24	11.39	11.54	11.70	11.85	12.01	2	3	5	6	8
2.3	12.17	12.33	12.49	12.65	12.81	12.98	13.14	13.31	13.48	13.65	2	3	5	7	8
2.4	13.82	14.00	14.17	14.35	14.53	14.71	14.89	15.07	15.25	15.44	2	4	5	7	9
2.5	15.63	15.81	16.00	16.19	16.39	16.58	16.78	16.97	17.17	17.37	2	4	6	8	10
2.6	17.58	17.78	17.98	18.19	18.40	18.61	18.82	19.03	19.25	19.47	2	4	6	8	11
2.7	19.68	19.90	20.12	20.35	20.57	20.80	21.02	21.25	21.48	21.72	2	5	7	9	11
2.8	21.95	22.19	22.43	22.67	22.91	23.15	23.39	23.64	23.89	24.14	2	5	7	10	12
2.9	24.39	24.64	24.90	25.15	25.41	25.67	25.93	26.20	26.46	26.73	3	5	8	10	13
3.0	**27.00**	**27.27**	**27.54**	**27.82**	**28.09**	**28.37**	**28.65**	**28.93**	**29.22**	**29.50**	3	6	8	11	14
3.1	29.79	30.08	30.37	30.66	30.96	31.26	31.55	31.86	32.16	32.46	3	6	9	12	15
3.2	32.77	33.08	33.39	33.70	34.01	34.33	34.65	34.97	35.29	35.61	3	6	10	13	16
3.3	35.94	36.26	36.59	36.93	37.26	37.60	37.93	38.27	38.61	38.96	3	7	10	13	17
3.4	39.30	39.65	40.00	40.35	40.71	41.06	41.42	41.78	42.14	42.51	4	7	11	14	18
3.5	42.88	43.24	43.61	43.99	44.36	44.74	45.12	45.50	45.88	46.27	4	7	11	15	19
3.6	46.66	47.05	47.44	47.83	48.23	48.63	49.03	49.43	49.84	50.24	4	8	12	16	20
3.7	50.65	51.06	51.48	51.90	52.31	52.73	53.16	53.58	54.01	54.44	4	8	13	17	21
3.8	54.87	55.31	55.74	56.18	56.62	57.07	57.51	57.96	58.41	58.86	4	9	13	18	22
3.9	59.32	59.78	60.24	60.70	61.16	61.63	62.10	62.57	63.04	63.52	5	9	14	19	
4.0	**64.00**	**64.48**	**64.96**	**65.45**	**65.94**	**66.43**	**66.92**	**67.42**	**67.92**	**68.42**	5	10	15	20	
4.1	68.92	69.43	69.93	70.44	70.96	71.47	71.99	72.51	73.03	73.56	5	10	16		
4.2	74.09	74.62	75.15	75.69	76.23	76.77	77.31	77.85	78.40	78.95	5	11	16		
4.3	79.51	80.06	80.62	81.18	81.75	82.31	82.88	83.45	84.03	84.60	6	11	17		
4.4	85.18	85.77	86.35	86.94	87.53	88.12	88.72	89.31	89.92	90.52	6	12	18		
4.5	91.13	91.73	92.35	92.96	93.58	94.20	94.82	95.44	96.07	96.70	6	13	19		
4.6	97.34	97.97	98.61	99.25	99.90	100.54	.....	.....	.....	.....	6	13	19		
4.6	.....	.....	.....	.....	.....	100.5	101.2	101.8	102.5	103.2	1	1	2	3	3
4.7	103.8	104.5	105.2	105.8	106.5	107.2	107.9	108.5	109.2	109.9	1	1	2	3	3
4.8	110.6	111.3	112.0	112.7	113.4	114.1	114.8	115.5	116.2	116.9	1	1	2	3	4
4.9	117.6	118.4	119.1	119.8	120.6	121.3	122.0	122.8	123.5	124.3	1	1	2	3	4
5.0	**125.0**	**125.8**	**126.5**	**127.3**	**128.0**	**128.8**	**129.6**	**130.3**	**131.1**	**131.9**	1	2	2	3	4
5.1	132.7	133.4	134.2	135.0	135.8	136.6	137.4	138.2	139.0	139.8	1	2	2	3	4
5.2	140.6	141.4	142.2	143.1	143.9	144.7	145.5	146.4	147.2	148.0	1	2	2	3	4
5.3	148.9	149.7	150.6	151.4	152.3	153.1	154.0	154.9	155.7	156.6	1	2	3	3	4
5.4	157.5	158.3	159.2	160.1	161.0	161.9	162.8	163.7	164.6	165.5	1	2	3	4	4
N	0	1	2	3	4	5	6	7	8	9	1	2	3	4	5

Necessary to interpolate here

Interpolate here

a Correct for a fourth significant figure as in Table 1. If the decimal point is moved *one* place in *N*. move it *three* places in the tabular number.

Table 2. Cubes of numbers—*Continued*

N	0	1	2	3	4	5	6	7	8	9	Prop. parts				
											1	2	3	4	5
5.5	166.4	167.3	168.2	169.1	170.0	171.0	171.9	172.8	173.7	174.7	1	2	3	4	5
5.6	175.6	176.6	177.5	178.5	179.4	180.4	181.3	182.3	183.3	184.2	1	2	3	4	5
5.7	185.2	186.2	187.1	188.1	189.1	190.1	191.1	192.1	193.1	194.1	1	2	3	4	5
5.8	195.1	196.1	197.1	198.2	199.2	200.2	201.2	202.3	203.3	204.3	1	2	3	4	5
5.9	205.4	206.4	207.5	208.5	209.6	210.6	211.7	212.8	213.8	214.9	1	2	3	4	5
6.0	**216.0**	**217.1**	**218.2**	**219.3**	**220.3**	**221.4**	**222.5**	**223.6**	**224.8**	**225.9**	**1**	**2**	**3**	**4**	**6**
6.1	227.0	228.1	229.2	230.3	231.5	232.6	233.7	234.9	236.0	237.2	1	2	3	5	6
6.2	238.3	239.5	240.6	241.8	243.0	244.1	245.3	246.5	247.7	248.9	1	2	4	5	6
6.3	250.0	251.2	252.4	253.6	254.8	256.0	257.3	258.5	259.7	260.9	1	2	4	5	6
6.4	262.1	263.4	264.6	265.8	267.1	268.3	269.6	270.8	272.1	273.4	1	3	4	5	6
6.5	274.6	275.9	277.2	278.4	279.7	281.0	282.3	283.6	284.9	286.2	1	3	4	5	7
6.6	287.5	288.8	290.1	291.4	292.8	294.1	295.4	296.7	298.1	299.4	1	3	4	5	7
6.7	300.8	302.1	303.5	304.8	306.2	307.5	308.9	310.3	311.7	313.0	1	3	4	6	7
6.8	314.4	315.8	317.2	318.6	320.0	321.4	322.8	324.2	325.7	327.1	1	3	4	6	7
6.9	328.5	329.9	331.4	332.8	334.3	335.7	337.2	338.6	340.1	341.5	1	3	4	6	7
7.0	**343.0**	**344.5**	**345.9**	**347.4**	**348.9**	**350.4**	**351.9**	**353.4**	**354.9**	**356.4**	**1**	**3**	**4**	**6**	**7**
7.1	357.9	359.4	360.9	362.5	364.0	365.5	367.1	368.6	370.1	371.7	2	3	5	6	8
7.2	373.2	374.8	376.4	377.9	379.5	381.1	382.7	384.2	385.8	387.4	2	3	5	6	8
7.3	389.0	390.6	392.2	393.8	395.4	397.1	398.7	400.3	401.9	403.6	2	3	5	7	8
7.4	405.2	406.9	408.5	410.2	411.8	413.5	415.2	416.8	418.5	420.2	2	3	5	7	8
7.5	421.9	423.6	425.3	427.0	428.7	430.4	432.1	433.8	435.5	437.2	2	3	5	7	9
7.6	439.0	440.7	442.5	444.2	445.9	447.7	449.5	451.2	453.0	454.8	2	3	5	7	9
7.7	456.5	458.3	460.1	461.9	463.7	465.5	467.3	469.1	470.9	472.7	2	4	5	7	9
7.8	474.6	476.4	478.2	480.0	481.9	483.7	485.6	487.4	489.3	491.2	2	4	6	7	9
7.9	493.0	494.9	496.8	498.7	500.6	502.5	504.4	506.3	508.2	510.1	2	4	6	8	9
8.0	**512.0**	**513.9**	**515.8**	**517.8**	**519.7**	**521.7**	**523.6**	**525.6**	**527.5**	**529.5**	**2**	**4**	**6**	**8**	**10**
8.1	531.4	533.4	535.4	537.4	539.4	541.3	543.3	545.3	547.3	549.4	2	4	6	8	10
8.2	551.4	553.4	555.4	557.4	559.5	561.5	563.6	565.6	567.7	569.7	2	4	6	8	10
8.3	571.8	573.9	575.9	578.0	580.1	582.2	584.3	586.4	588.5	590.6	2	4	6	8	10
8.4	592.7	594.8	596.9	599.1	601.2	603.4	605.5	607.6	609.8	612.0	2	4	6	9	11
8.5	614.1	616.3	618.5	620.7	622.8	625.0	627.2	629.4	631.6	633.8	2	4	7	9	11
8.6	636.1	638.3	640.5	642.7	645.0	647.2	649.5	651.7	654.0	656.2	2	4	7	9	11
8.7	658.5	660.8	663.1	665.3	667.6	669.9	672.2	674.5	676.8	679.2	2	5	7	9	11
8.8	681.5	683.8	686.1	688.5	690.8	693.2	695.5	697.9	700.2	702.6	2	5	7	9	12
8.9	705.0	707.3	709.7	712.1	714.5	716.9	719.3	721.7	724.2	726.6	2	5	7	10	12
9.0	**729.0**	**731.4**	**733.9**	**736.3**	**738.8**	**741.2**	**743.7**	**746.1**	**748.6**	**751.1**	**2**	**5**	**7**	**10**	**12**
9.1	753.6	756.1	758.6	761.0	763.6	766.1	768.6	771.1	773.6	776.2	3	5	7	10	13
9.2	778.7	781.2	783.8	786.3	788.9	791.5	794.0	796.6	799.2	801.8	3	5	8	10	13
9.3	804.4	807.0	809.6	812.2	814.8	817.4	820.0	822.7	825.3	827.9	3	5	8	10	13
9.4	830.6	833.2	835.9	838.6	841.2	843.9	846.6	849.3	852.0	854.7	3	5	8	11	13
9.5	857.4	860.1	862.8	865.5	868.3	871.0	873.7	876.5	879.2	882.0	3	5	8	11	14
9.6	884.7	887.5	890.3	893.1	895.8	898.6	901.4	904.2	907.0	909.9	3	6	8	11	14
9.7	912.7	915.5	918.3	921.2	924.0	926.9	929.7	932.6	935.4	938.3	3	6	9	11	14
9.8	941.2	944.1	947.0	949.9	952.8	955.7	958.6	961.5	964.4	967.4	3	6	9	12	15
9.9	970.3	973.2	976.2	979.1	982.1	985.1	988.0	991.0	994.0	997.0	3	6	9	12	15
N	0	1	2	3	4	5	6	7	8	9	1	2	3	4	5

Table 3. Square roots of numbers 1.0 to 5.49 *a*

N	0	1	2	3	4	5	6	7	8	9	Prop. parts				
											1	2	3	4	5
1.0	**1.000**	**1.005**	**1.010**	**1.015**	**1.020**	**1.025**	**1.030**	**1.034**	**1.039**	**1.044**	0	1	1	2	2
1.1	1.049	1.054	1.058	1.063	1.068	1.072	1.077	1.082	1.086	1.091	0	1	1	2	2
1.2	1.095	1.100	1.105	1.109	1.114	1.118	1.122	1.127	1.131	1.136	0	1	1	2	2
1.3	1.140	1.145	1.149	1.153	1.158	1.162	1.166	1.170	1.175	1.179	0	1	1	2	2
1.4	1.183	1.187	1.192	1.196	1.200	1.204	1.208	1.212	1.217	1.221	0	1	1	2	2
1.5	1.225	1.229	1.233	1.237	1.241	1.245	1.249	1.253	1.257	1.261	0	1	1	2	2
1.6	1.265	1.269	1.273	1.277	1.281	1.285	1.288	1.292	1.296	1.300	0	1	1	2	2
1.7	1.304	1.308	1.311	1.315	1.319	1.323	1.327	1.330	1.334	1.338	0	1	1	2	2
1.8	1.342	1.345	1.349	1.353	1.356	1.360	1.364	1.367	1.371	1.375	0	1	1	1	2
1.9	1.378	1.382	1.386	1.389	1.393	1.396	1.400	1.404	1.407	1.411	0	1	1	1	2
2.0	**1.414**	**1.418**	**1.421**	**1.425**	**1.428**	**1.432**	**1.435**	**1.439**	**1.442**	**1.446**	0	1	1	1	2
2.1	1.449	1.453	1.456	1.459	1.463	1.466	1.470	1.473	1.476	1.480	0	1	1	1	2
2.2	1.483	1.487	1.490	1.493	1.497	1.500	1.503	1.507	1.510	1.513	0	1	1	1	2
2.3	1.517	1.520	1.523	1.526	1.530	1.533	1.536	1.539	1.543	1.546	0	1	1	1	2
2.4	1.549	1.552	1.556	1.559	1.562	1.565	1.568	1.572	1.575	1.578	0	1	1	1	2
2.5	1.581	1.584	1.587	1.591	1.594	1.597	1.600	1.603	1.606	1.609	0	1	1	1	2
2.6	1.612	1.616	1.619	1.622	1.625	1.628	1.631	1.634	1.637	1.640	0	1	1	1	2
2.7	1.643	1.646	1.649	1.652	1.655	1.658	1.661	1.664	1.667	1.670	0	1	1	1	2
2.8	1.673	1.676	1.679	1.682	1.685	1.688	1.691	1.694	1.697	1.700	0	1	1	1	1
2.9	1.703	1.706	1.709	1.712	1.715	1.718	1.720	1.723	1.726	1.729	0	1	1	1	1
3.0	**1.732**	**1.735**	**1.738**	**1.741**	**1.744**	**1.746**	**1.749**	**1.752**	**1.755**	**1.758**	0	1	1	1	1
3.1	1.761	1.764	1.766	1.769	1.772	1.775	1.778	1.780	1.783	1.786	0	1	1	1	1
3.2	1.789	1.792	1.794	1.797	1.800	1.803	1.806	1.808	1.811	1.814	0	1	1	1	1
3.3	1.817	1.819	1.822	1.825	1.828	1.830	1.833	1.836	1.838	1.841	0	1	1	1	1
3.4	1.844	1.847	1.849	1.852	1.855	1.857	1.860	1.863	1.865	1.868	0	1	1	1	1
3.5	1.871	1.873	1.876	1.879	1.881	1.884	1.887	1.889	1.892	1.895	0	1	1	1	1
3.6	1.897	1.900	1.903	1.905	1.908	1.910	1.913	1.916	1.918	1.921	0	1	1	1	1
3.7	1.924	1.926	1.929	1.931	1.934	1.936	1.939	1.942	1.944	1.947	0	1	1	1	1
3.8	1.949	1.952	1.954	1.957	1.960	1.962	1.965	1.967	1.970	1.972	0	1	1	1	1
3.9	1.975	1.977	1.980	1.982	1.985	1.987	1.990	1.992	1.995	1.997	0	1	1	1	1
4.0	**2.000**	**2.002**	**2.005**	**2.007**	**2.010**	**2.012**	**2.015**	**2.017**	**2.020**	**2.022**	0	0	1	1	1
4.1	2.025	2.027	2.030	2.032	2.035	2.037	2.040	2.042	2.045	2.047	0	0	1	1	1
4.2	2.049	2.052	2.054	2.057	2.059	2.062	2.064	2.066	2.069	2.071	0	0	1	1	1
4.3	2.074	2.076	2.078	2.081	2.083	2.086	2.088	2.090	2.093	2.095	0	0	1	1	1
4.4	2.098	2.100	2.102	2.105	2.107	2.110	2.112	2.114	2.117	2.119	0	0	1	1	1
4.5	2.121	2.124	2.126	2.128	2.131	2.133	2.135	2.138	2.140	2.142	0	0	1	1	1
4.6	2.145	2.147	2.149	2.152	2.154	2.156	2.159	2.161	2.163	2.166	0	0	1	1	1
4.7	2.168	2.170	2.173	2.175	2.177	2.179	2.182	2.184	2.186	2.189	0	0	1	1	1
4.8	2.191	2.193	2.195	2.198	2.200	2.202	2.205	2.207	2.209	2.211	0	0	1	1	1
4.9	2.214	2.216	2.218	2.220	2.223	2.225	2.227	2.229	2.232	2.234	0	0	1	1	1
5.0	**2.236**	**2.238**	**2.241**	**2.243**	**2.245**	**2.247**	**2.249**	**2.252**	**2.254**	**2.256**	0	0	1	1	1
5.1	2.258	2.261	2.263	2.265	2.267	2.269	2.272	2.274	2.276	2.278	0	0	1	1	1
5.2	2.280	2.283	2.285	2.287	2.289	2.291	2.293	2.296	2.298	2.300	0	0	1	1	1
5.3	2.302	2.304	2.307	2.309	2.311	2.313	2.315	2.317	2.319	2.322	0	0	1	1	1
5.4	2.324	2.326	2.328	2.330	2.332	2.335	2.337	2.339	2.341	2.343	0	0	1	1	1

a If the decimal point is moved *two* places in *N*, move it *one* place in the tabular number.

Table 3. Square roots of numbers 5.50 to 9.99—*Continued*

N	0	1	2	3	4	5	6	7	8	9	Prop. parts				
											1	2	3	4	5
5.5	2.345	2.347	2.349	2.352	2.354	2.356	2.358	2.360	2.362	2.364	0	0	1	1	1
5.6	2.366	2.369	2.371	2.373	2.375	2.377	2.379	2.381	2.383	2.385	0	0	1	1	1
5.7	2.387	2.390	2.392	2.394	2.396	2.398	2.400	2.402	2.404	2.406	0	0	1	1	1
5.8	2.408	2.410	2.412	2.415	2.417	2.419	2.421	2.423	2.425	2.427	0	0	1	1	1
5.9	2.429	2.431	2.433	2.435	2.437	2.439	2.441	2.443	2.445	2.447	0	0	1	1	1
6.0	**2.449**	**2.452**	**2.454**	**2.456**	**2.458**	**2.460**	**2.462**	**2.464**	**2.466**	**2.468**	**0**	**0**	**1**	**1**	**1**
6.1	2.470	2.472	2.474	2.476	2.478	2.480	2.482	2.484	2.486	2.488	0	0	1	1	1
6.2	2.490	2.492	2.494	2.496	2.498	2.500	2.502	2.504	2.506	2.508	0	0	1	1	1
6.3	2.510	2.512	2.514	2.516	2.518	2.520	2.522	2.524	2.526	2.528	0	0	1	1	1
6.4	2.530	2.532	2.534	2.536	2.538	2.540	2.542	2.544	2.546	2.548	0	0	1	1	1
6.5	2.550	2.551	2.553	2.555	2.557	2.559	2.561	2.563	2.565	2.567	0	0	1	1	1
6.6	2.569	2.571	2.573	2.575	2.577	2.579	2.581	2.583	2.585	2.587	0	0	1	1	1
6.7	2.588	2.590	2.592	2.594	2.596	2.598	2.600	2.602	2.604	2.606	0	0	1	1	1
6.8	2.608	2.610	2.612	2.613	2.615	2.617	2.619	2.621	2.623	2.625	0	0	1	1	1
6.9	2.627	2.629	2.631	2.632	2.634	2.636	2.638	2.640	2.642	2.644	0	0	1	1	1
7.0	**2.646**	**2.648**	**2.650**	**2.651**	**2.653**	**2.655**	**2.657**	**2.659**	**2.661**	**2.663**	**0**	**0**	**1**	**1**	**1**
7.1	2.665	2.666	2.668	2.670	2.672	2.674	2.676	2.678	2.680	2.681	0	0	1	1	1
7.2	2.683	2.685	2.687	2.689	2.691	2.693	2.694	2.696	2.698	2.700	0	0	1	1	1
7.3	2.702	2.704	2.706	2.707	2.709	2.711	2.713	2.715	2.717	2.718	0	0	1	1	1
7.4	2.720	2.722	2.724	2.726	2.728	2.729	2.731	2.733	2.735	2.737	0	0	1	1	1
7.5	2.739	2.740	2.742	2.744	2.746	2.748	2.750	2.751	2.753	2.755	0	0	1	1	1
7.6	2.757	2.759	2.760	2.762	2.764	2.766	2.768	2.769	2.771	2.773	0	0	1	1	1
7.7	2.775	2.777	2.778	2.780	2.782	2.784	2.786	2.787	2.789	2.791	0	0	1	1	1
7.8	2.793	2.795	2.796	2.798	2.800	2.802	2.804	2.805	2.807	2.809	0	0	1	1	1
7.9	2.811	2.812	2.814	2.816	2.818	2.820	2.821	2.823	2.825	2.827	0	0	1	1	1
8.0	**2.828**	**2.830**	**2.832**	**2.834**	**2.835**	**2.837**	**2.839**	**2.841**	**2.843**	**2.844**	**0**	**0**	**1**	**1**	**1**
8.1	2.846	2.848	2.850	2.851	2.853	2.855	2.857	2.858	2.860	2.862	0	0	1	1	1
8.2	2.864	2.865	2.867	2.869	2.871	2.872	2.874	2.876	2.877	2.879	0	0	1	1	1
8.3	2.881	2.883	2.884	2.886	2.888	2.890	2.891	2.893	2.895	2.897	0	0	1	1	1
8.4	2.898	2.900	2.902	2.903	2.905	2.907	2.909	2.910	2.912	2.914	0	0	1	1	1
8.5	2.915	2.917	2.919	2.921	2.922	2.924	2.926	2.927	2.929	2.931	0	0	1	1	1
8.6	2.933	2.934	2.936	2.938	2.939	2.941	2.943	2.944	2.946	2.948	0	0	1	1	1
8.7	2.950	2.951	2.953	2.955	2.956	2.958	2.960	2.961	2.963	2.965	0	0	1	1	1
8.8	2.966	2.968	2.970	2.972	2.973	2.975	2.977	2.978	2.980	2.982	0	0	1	1	1
8.9	2.983	2.985	2.987	2.988	2.990	2.992	2.993	2.995	2.997	2.998	0	0	1	1	1
9.0	**3.000**	**3.002**	**3.003**	**3.005**	**3.007**	**3.008**	**3.010**	**3.012**	**3.013**	**3.015**	**0**	**0**	**0**	**1**	**1**
9.1	3.017	3.018	3.020	3.022	3.023	3.025	3.027	3.028	3.030	3.032	0	0	0	1	1
9.2	3.033	3.035	3.036	3.038	3.040	3.041	3.043	3.045	3.046	3.048	0	0	0	1	1
9.3	3.050	3.051	3.053	3.055	3.056	3.058	3.059	3.061	3.063	3.064	0	0	0	1	1
9.4	3.066	3.068	3.069	3.071	3.072	3.074	3.076	3.077	3.079	3.081	0	0	0	1	1
9.5	3.082	3.084	3.085	3.087	3.089	3.090	3.092	3.094	3.095	3.097	0	0	0	1	1
9.6	3.098	3.100	3.102	3.103	3.105	3.106	3.108	3.110	3.111	3.113	0	0	0	1	1
9.7	3.114	3.116	3.118	3.119	3.121	3.122	3.124	3.126	3.127	3.129	0	0	0	1	1
9.8	3.130	3.132	3.134	3.135	3.137	3.138	3.140	3.142	3.143	3.145	0	0	0	1	1
9.9	3.146	3.148	3.150	3.151	3.153	3.154	3.156	3.158	3.159	3.161	0	0	0	1	1

Table 3. Square roots of numbers 10 to 54.9—*Continued*

N	0	1	2	3	4	5	6	7	8	9	Prop. parts				
											1	2	3	4	5
10.	**3.162**	**3.178**	**3.194**	**3.209**	**3.225**	**3.240**	**3.256**	**3.271**	**3.286**	**3.302**	**2**	**3**	**5**	**6**	**8**
11.	3.317	3.332	3.347	3.362	3.376	3.391	3.406	3.421	3.435	3.450	1	3	4	6	7
12.	3.464	3.479	3.493	3.507	3.521	3.536	3.550	3.564	3.578	3.592	1	3	4	6	7
13.	3.606	3.619	3.633	3.647	3.661	3.674	3.688	3.701	3.715	3.728	1	3	4	5	7
14.	3.742	3.755	3.768	3.782	3.795	3.808	3.821	3.834	3.847	3.860	1	3	4	5	7
15.	3.873	3.886	3.899	3.912	3.924	3.937	3.950	3.962	3.975	3.987	1	3	4	5	6
16.	4.000	4.012	4.025	4.037	4.050	4.062	4.074	4.087	4.099	4.111	1	2	4	5	6
17.	4.123	4.135	4.147	4.159	4.171	4.183	4.195	4.207	4.219	4.231	1	2	4	5	6
18.	4.243	4.254	4.266	4.278	4.290	4.301	4.313	4.324	4.336	4.347	1	2	3	5	6
19.	4.359	4.370	4.382	4.393	4.405	4.416	4.427	4.438	4.450	4.461	1	2	3	5	6
20.	**4.472**	**4.483**	**4.494**	**4.506**	**4.517**	**4.528**	**4.539**	**4.550**	**4.561**	**4.572**	**1**	**2**	**3**	**4**	**6**
21.	4.583	4.593	4.604	4.615	4.626	4.637	4.648	4.658	4.669	4.680	1	2	3	4	5
22.	4.690	4.701	4.712	4.722	4.733	4.743	4.754	4.764	4.775	4.785	1	2	3	4	5
23.	4.796	4.806	4.817	4.827	4.837	4.848	4.858	4.868	4.879	4.889	1	2	3	4	5
24.	4.899	4.909	4.919	4.930	4.940	4.950	4.960	4.970	4.980	4.990	1	2	3	4	5
25.	5.000	5.010	5.020	5.030	5.040	5.050	5.060	5.070	5.079	5.089	1	2	3	4	5
26.	5.099	5.109	5.119	5.128	5.138	5.148	5.158	5.167	5.177	5.187	1	2	3	4	5
27.	5.196	5.206	5.215	5.225	5.235	5.244	5.254	5.263	5.273	5.282	1	2	3	4	5
28.	5.292	5.301	5.310	5.320	5.329	5.339	5.348	5.357	5.367	5.376	1	2	3	4	5
29.	5.385	5.394	5.404	5.413	5.422	5.431	5.441	5.450	5.459	5.468	1	2	3	4	5
30.	**5.477**	**5.486**	**5.495**	**5.505**	**5.514**	**5.523**	**5.532**	**5.541**	**5.550**	**5.559**	**1**	**2**	**3**	**4**	**5**
31.	5.568	5.577	5.586	5.595	5.604	5.612	5.621	5.630	5.639	5.648	1	2	3	4	4
32.	5.657	5.666	5.675	5.683	5.692	5.701	5.710	5.718	5.727	5.736	1	2	3	4	4
33.	5.745	5.753	5.762	5.771	5.779	5.788	5.797	5.805	5.814	5.822	1	2	3	3	4
34.	5.831	5.840	5.848	5.857	5.865	5.874	5.882	5.891	5.899	5.908	1	2	3	3	4
35.	5.916	5.925	5.933	5.941	5.950	5.958	5.967	5.975	5.983	5.992	1	2	3	3	4
36.	6.000	6.008	6.017	6.025	6.033	6.042	6.050	6.058	6.066	6.075	1	2	2	3	4
37.	6.083	6.091	6.099	6.107	6.116	6.124	6.132	6.140	6.148	6.156	1	2	2	3	4
38.	6.164	6.173	6.181	6.189	6.197	6.205	6.213	6.221	6.229	6.237	1	2	2	3	4
39.	6.245	6.253	6.261	6.269	6.277	6.285	6.293	6.301	6.309	6.317	1	2	2	3	4
40.	**6.325**	**6.332**	**6.340**	**6.348**	**6.356**	**6.364**	**6.372**	**6.380**	**6.387**	**6.395**	**1**	**2**	**2**	**3**	**4**
41.	6.403	6.411	6.419	6.427	6.434	6.442	6.450	6.458	6.465	6.473	1	2	2	3	4
42.	6.481	6.488	6.496	6.504	6.512	6.519	6.527	6.535	6.542	6.550	1	2	2	3	4
43.	6.557	6.565	6.573	6.580	6.588	6.595	6.603	6.611	6.618	6.626	1	2	2	3	4
44.	6.633	6.641	6.648	6.656	6.663	6.671	6.678	6.686	6.693	6.701	1	2	2	3	4
45.	6.708	6.716	6.723	6.731	6.738	6.745	6.753	6.760	6.768	6.775	1	1	2	3	4
46.	6.782	6.790	6.797	6.804	6.812	6.819	6.826	6.834	6.841	6.848	1	1	2	3	4
47.	6.856	6.863	6.870	6.877	6.885	6.892	6.899	6.907	6.914	6.921	1	1	2	3	4
48.	6.928	6.935	6.943	6.950	6.957	6.964	6.971	6.979	6.986	6.993	1	1	2	3	4
49.	7.000	7.007	7.014	7.021	7.029	7.036	7.043	7.050	7.057	7.064	1	1	2	3	4
50.	**7.071**	**7.078**	**7.085**	**7.092**	**7.099**	**7.106**	**7.113**	**7.120**	**7.127**	**7.134**	**1**	**1**	**2**	**3**	**4**
51.	7.141	7.148	7.155	7.162	7.169	7.176	7.183	7.190	7.197	7.204	1	1	2	3	3
52.	7.211	7.218	7.225	7.232	7.239	7.246	7.253	7.259	7.266	7.273	1	1	2	3	3
53.	7.280	7.287	7.294	7.301	7.308	7.314	7.321	7.328	7.335	7.342	1	1	2	3	3
54.	7.348	7.355	7.362	7.369	7.376	7.382	7.389	7.396	7.403	7.409	1	1	2	3	3

Table 3. Square roots of numbers 55 to 99.9—*Continued*

N	0	1	2	3	4	5	6	7	8	9	Prop. parts				
											1	2	3	4	5
55.	7.416	7.423	7.430	7.436	7.443	7.450	7.457	7.463	7.470	7.477	1	1	2	3	3
56.	7.483	7.490	7.497	7.503	7.510	7.517	7.523	7.530	7.537	7.543	1	1	2	3	3
57.	7.550	7.556	7.563	7.570	7.576	7.583	7.589	7.596	7.603	7.609	1	1	2	3	3
58.	7.616	7.622	7.629	7.635	7.642	7.649	7.655	7.662	7.668	7.675	1	1	2	3	3
59.	7.681	7.688	7.694	7.701	7.707	7.714	7.720	7.727	7.733	7.740	1	1	2	3	3
60.	**7.746**	**7.752**	**7.759**	**7.765**	**7.772**	**7.778**	**7.785**	**7.791**	**7.797**	**7.804**	**1**	**1**	**2**	**3**	**3**
61.	7.810	7.817	7.823	7.829	7.836	7.842	7.849	7.855	7.861	7.868	1	1	2	3	3
62.	7.874	7.880	7.887	7.893	7.899	7.906	7.912	7.918	7.925	7.931	1	1	2	3	3
63.	7.937	7.944	7.950	7.956	7.962	7.969	7.975	7.981	7.987	7.994	1	1	2	3	3
64.	8.000	8.006	8.012	8.019	8.025	8.031	8.037	8.044	8.050	8.056	1	1	2	2	3
65.	8.062	8.068	8.075	8.081	8.087	8.093	8.099	8.106	8.112	8.118	1	1	2	2	3
66.	8.124	8.130	8.136	8.142	8.149	8.155	8.161	8.167	8.173	8.179	1	1	2	2	3
67.	8.185	8.191	8.198	8.204	8.210	8.216	8.222	8.228	8.234	8.240	1	1	2	2	3
68.	8.246	8.252	8.258	8.264	8.270	8.276	8.283	8.289	8.295	8.301	1	1	2	2	3
69.	8.307	8.313	8.319	8.325	8.331	8.337	8.343	8.349	8.355	8.361	1	1	2	2	3
70.	**8.367**	**8.373**	**8.379**	**8.385**	**8.390**	**8.396**	**8.402**	**8.408**	**8.414**	**8.420**	**1**	**1**	**2**	**2**	**3**
71.	8.426	8.432	8.438	8.444	8.450	8.456	8.462	8.468	8.473	8.479	1	1	2	2	3
72.	8.485	8.491	8.497	8.503	8.509	8.515	8.521	8.526	8.532	8.538	1	1	2	2	3
73.	8.544	8.550	8.556	8.562	8.567	8.573	8.579	8.585	8.591	8.597	1	1	2	2	3
74.	8.602	8.608	8.614	8.620	8.626	8.631	8.637	8.643	8.649	8.654	1	1	2	2	3
75.	8.660	8.666	8.672	8.678	8.683	8.689	8.695	8.701	8.706	8.712	1	1	2	2	3
76.	8.718	8.724	8.729	8.735	8.741	8.746	8.752	8.758	8.764	8.769	1	1	2	2	3
77.	8.775	8.781	8.786	8.792	8.798	8.803	8.809	8.815	8.820	8.826	1	1	2	2	3
78.	8.832	8.837	8.843	8.849	8.854	8.860	8.866	8.871	8.877	8.883	1	1	2	2	3
79.	8.888	8.894	8.899	8.905	8.911	8.916	8.922	8.927	8.933	8.939	1	1	2	2	3
80.	**8.944**	**8.950**	**8.955**	**8.961**	**8.967**	**8.972**	**8.978**	**8.983**	**8.989**	**8.994**	**1**	**1**	**2**	**2**	**3**
81.	9.000	9.006	9.011	9.017	9.022	9.028	9.033	9.039	9.044	9.050	1	1	2	2	3
82.	9.055	9.061	9.066	9.072	9.077	9.083	9.088	9.094	9.099	9.105	1	1	2	2	3
83.	9.110	9.116	9.121	9.127	9.132	9.138	9.143	9.149	9.154	9.160	1	1	2	2	3
84.	9.165	9.171	9.176	9.182	9.187	9.192	9.198	9.203	9.209	9.214	1	1	2	2	3
85.	9.220	9.225	9.230	9.236	9.241	9.247	9.252	9.257	9.263	9.268	1	1	2	2	3
86.	9.274	9.279	9.284	9.290	9.295	9.301	9.306	9.311	9.317	9.322	1	1	2	2	3
87.	9.327	9.333	9.338	9.343	9.349	9.354	9.359	9.365	9.370	9.375	1	1	2	2	3
88.	9.381	9.386	9.391	9.397	9.402	9.407	9.413	9.418	9.423	9.429	1	1	2	2	3
89.	9.434	9.439	9.445	9.450	9.455	9.460	9.466	9.471	9.476	9.482	1	1	2	2	3
90.	**9.487**	**9.492**	**9.497**	**9.503**	**9.508**	**9.513**	**9.518**	**9.524**	**9.529**	**9.534**	**1**	**1**	**2**	**2**	**3**
91.	9.539	9.545	9.550	9.555	9.560	9.566	9.571	9.576	9.581	9.586	1	1	2	2	3
92.	9.592	9.597	9.602	9.607	9.612	9.618	9.623	9.628	9.633	9.638	1	1	2	2	3
93.	9.644	9.649	9.654	9.659	9.664	9.670	9.675	9.680	9.685	9.690	1	1	2	2	3
94.	9.695	9.701	9.706	9.711	9.716	9.721	9.726	9.731	9.737	9.742	1	1	2	2	3
95.	9.747	9.752	9.757	9.762	9.767	9.772	9.778	9.783	9.788	9.793	1	1	2	2	3
96.	9.798	9.803	9.808	9.813	9.818	9.823	9.829	9.834	9.839	9.844	1	1	2	2	3
97.	9.849	9.854	9.859	9.864	9.869	9.874	9.879	9.884	9.889	9.894	1	1	2	2	3
98.	9.899	9.905	9.910	9.915	9.920	9.925	9.930	9.935	9.940	9.945	1	1	2	2	3
99.	9.950	9.955	9.960	9.965	9.970	9.975	9.980	9.985	9.990	9.995	1	1	2	2	3

Table 4. Cube roots of numbers 1.0 to 49.9 *a*

N	0	1	2	3	4	5	6	7	8	9	Prop. parts 1	2	3	4	5
1.	**1.000**	**1.032**	**1.063**	**1.091**	**1.119**	**1.145**	**1.170**	**1.193**	**1.216**	**1.239**	. .	. .	. .	. .	. .
2.	1.260	1.281	1.301	1.320	1.339	1.357	1.375	1.392	1.409	1.426	. .	. .	. .	. .	. .
3.	1.442	1.458	1.474	1.489	1 504	1.518	1.533	1.547	1.560	1.574	1	3	4	6	7
4.	1.587	1.601	1.613	1.626	1.639	1.651	1.663	1.675	1.687	1.698	1	2	4	5	6
5.	1.710	1.721	1.732	1.744	1.754	1.765	1.776	1.786	1.797	1.807	1	2	3	4	5
6.	1.817	1.827	1.837	1.847	1.857	1.866	1.876	1.885	1.895	1.904	1	2	3	4	5
7.	1.913	1.922	1.931	1.940	1.949	1.957	1.966	1.975	1.983	1.992	1	2	3	3	4
8.	2.000	2.008	2.017	2.025	2.033	2.041	2.049	2.057	2.065	2.072	1	2	2	3	4
9.	2.080	2.088	2.095	2.103	2.110	2.118	2.125	2.133	2.140	2.147	1	2	2	3	4
10.	**2.154**	**2.162**	**2.169**	**2.176**	**2.183**	**2.190**	**2.197**	**2.204**	**2.210**	**2.217**	**1**	**2**	**2**	**3**	**3**
11.	2.224	2.231	2.237	2.244	2.251	2.257	2.264	2.270	2.277	2.283	1	1	2	3	3
12.	2.289	2.296	2.302	2.308	2.315	2.321	2.327	2.333	2.339	2.345	1	1	2	2	3
13.	2.351	2.357	2.363	2.369	2.375	2.381	2.387	2.393	2.399	2.404	1	1	2	2	3
14.	2.410	2.416	2.422	2.427	2.433	2.438	2.444	2.450	2.455	2.461	1	1	2	2	3
15.	2.466	2.472	2.477	2.483	2.488	2.493	2.499	2.504	2.509	2.515	1	1	2	2	3
16.	2.520	2.525	2.530	2.535	2.541	2.546	2.551	2.556	2.561	2.566	1	1	2	2	3
17.	2.571	2.576	2.581	2.586	2.591	2.596	2.601	2.606	2.611	2.616	0	1	1	2	2
18.	2.621	2.626	2.630	2.635	2.640	2.645	2.650	2.654	2.659	2.664	0	1	1	2	2
19.	2.668	2.673	2.678	2.682	2.687	2.692	2.696	2.701	2.705	2.710	0	1	1	2	2
20.	**2.714**	**2.719**	**2.723**	**2.728**	**2.732**	**2.737**	**2.741**	**2.746**	**2.750**	**2.755**	**0**	**1**	**1**	**2**	**2**
21.	2.759	2.763	2.768	2.772	2.776	2.781	2.785	2.789	2.794	2.798	0	1	1	2	2
22.	2.802	2.806	2.811	2.815	2.819	2.823	2.827	2.831	2.836	2.840	0	1	1	2	2
23.	2.844	2.848	2.852	2.856	2.860	2.864	2.868	2.872	2.876	2.880	0	1	1	2	2
24.	2.884	2.888	2.892	2.896	2.900	2.904	2.908	2.912	2.916	2.920	0	1	1	2	2
25.	2.924	2.928	2.932	2.936	2.940	2.943	2.947	2.951	2.955	2.959	0	1	1	2	2
26.	2.962	2.966	2.970	2.974	2.978	2.981	2.985	2.989	2.993	2.996	0	1	1	2	2
27.	3.000	3.004	3.007	3.011	3.015	3.018	3.022	3.026	3.029	3.033	0	1	1	1	2
28.	3.037	3.040	3.044	3.047	3.051	3.055	3.058	3.062	3.065	3.069	0	1	1	1	2
29.	3.072	3.076	3.079	3.083	3.086	3.090	3.093	3.097	3.100	3.104	0	1	1	1	2
30.	**3.107**	**3.111**	**3.114**	**3.118**	**3.121**	**3.124**	**3.128**	**3.131**	**3.135**	**3.138**	**0**	**1**	**1**	**1**	**2**
31.	3.141	3.145	3.148	3.151	3.155	3.158	3.162	3.165	3.168	3.171	0	1	1	1	2
32.	3.175	3.178	3.181	3.185	3.188	3.191	3.195	3.198	3.201	3.204	0	1	1	1	2
33.	3.208	3.211	3.214	3.217	3.220	3.224	3.227	3.230	3.233	3.236	0	1	1	1	2
34.	3.240	3.243	3.246	3.249	3.252	3.255	3.259	3.262	3.265	3.268	0	1	1	1	2
35.	3.271	3.274	3.277	3.280	3.283	3.287	3.290	3.293	3.296	3.299	0	1	1	1	2
36.	3.302	3.305	3.308	3.311	3.314	3.317	3.320	3.323	3.326	3.329	0	1	1	1	2
37.	3.332	3.335	3.338	3.341	3.344	3.347	3.350	3.353	3.356	3.359	0	1	1	1	1
38.	3.362	3.365	3.368	3.371	3.374	3.377	3.380	3.382	3.385	3.388	0	1	1	1	1
39.	3.391	3.394	3.397	3.400	3.403	3.406	3.409	3.411	3.414	3.417	0	1	1	1	1
40.	**3.420**	**3.423**	**3.426**	**3.428**	**3.431**	**3.434**	**3.437**	**3.440**	**3.443**	**3.445**	**0**	**1**	**1**	**1**	**1**
41.	3.448	3.451	3.454	3.457	3.459	3.462	3.465	3.468	3.471	3.473	0	1	1	1	1
42.	3.476	3.479	3.482	3.484	3.487	3.490	3.493	3.495	3.498	3.501	0	1	1	1	1
43.	3.503	3.506	3.509	3.512	3.514	3.517	3.520	3.522	3.525	3.528	0	1	1	1	1
44.	3.530	3.533	3.536	3.538	3.541	3.544	3.546	3.549	3.552	3.554	0	1	1	1	1
45.	3.557	3.560	3.562	3.565	3.567	3.570	3.573	3.575	3.578	3.580	0	1	1	1	1
46.	3.583	3.586	3.588	3.591	3.593	3.596	3.599	3.601	3.604	3.606	0	1	1	1	1
47.	3.609	3.611	3.614	3.616	3.619	3.622	3.624	3.627	3.629	3.632	0	1	1	1	1
48.	3.634	3.637	3.639	3.642	3.644	3.647	3.649	3.652	3.654	3.657	0	1	1	1	1
49.	3.659	3.662	3.664	3.667	3.669	3.672	3.674	3.677	3.679	3.682	0	0	1	1	1
N	0	1	2	3	4	5	6	7	8	9	1	2	3	4	5
											Prop. parts				

a If the decimal point is moved *three* places in *N*, move it *one* place in the tabular number.

Table 4. Cube roots of numbers 50.0 to 99.9—*Continued*

N	0	1	2	3	4	5	6	7	8	9	Prop. parts 1	2	3	4	5
50.	**3.684**	**3.686**	**3.689**	**3.691**	**3.694**	**3.696**	**3.699**	**3.701**	**3.704**	**3.706**	0	0	1	1	1
51.	3.708	3.711	3.713	3.716	3.718	3.721	3.723	3.725	3.728	3.730	0	0	1	1	1
52.	3.733	3.735	3.737	3.740	3.742	3.744	3.747	3.749	3.752	3.754	0	0	1	1	1
53.	3.756	3.759	3.761	3.763	3.766	3.768	3.770	3.773	3.775	3.777	0	0	1	1	1
54.	3.780	3.782	3.784	3.787	3.789	3.791	3.794	3.796	3.798	3.801	0	0	1	1	1
55.	3.803	3.805	3.808	3.810	3.812	3.814	3.817	3.819	3.821	3.824	0	0	1	1	1
56.	3.826	3.828	3.830	3.833	3.835	3.837	3.839	3.842	3.844	3.846	0	0	1	1	1
57.	3.849	3.851	3.853	3.855	3.857	3.860	3.862	3.864	3.866	3.869	0	0	1	1	1
58.	3.871	3.873	3.875	3.878	3.880	3.882	3.884	3.886	3.889	3.891	0	0	1	1	1
59.	3.893	3.895	3.897	3.900	3.902	3.904	3.906	3.908	3.911	3.913	0	0	1	1	1
60.	**3.915**	**3.917**	**3.919**	**3.921**	**3.924**	**3.926**	**3.928**	**3.930**	**3.932**	**3.934**	0	0	1	1	1
61.	3.936	3.939	3.941	3.943	3.945	3.947	3.949	3.951	3.954	3.956	0	0	1	1	1
62.	3.958	3.960	3.962	3.964	3.966	3.968	3.971	3.973	3.975	3.977	0	0	1	1	1
63.	3.979	3.981	3.983	3.985	3.987	3.990	3.992	3.994	3.996	3.998	0	0	1	1	1
64.	4.000	4.002	4.004	4.006	4.008	4.010	4.012	4.015	4.017	4.019	0	0	1	1	1
65.	4.021	4.023	4.025	4.027	4.029	4.031	4.033	4.035	4.037	4.039	0	0	1	1	1
66.	4.041	4.043	4.045	4.047	4.049	4.051	4.053	4.055	4.058	4.060	0	0	1	1	1
67.	4.062	4.064	4.066	4.068	4.070	4.072	4.074	4.076	4.078	4.080	0	0	1	1	1
68.	4.082	4.084	4.086	4.088	4.090	4.092	4.094	4.096	4.098	4.100	0	0	1	1	1
69.	4.102	4.104	4.106	4.108	4.109	4.111	4.113	4.115	4.117	4.119	0	0	1	1	1
70.	**4.121**	**4.123**	**4.125**	**4.127**	**4.129**	**4.131**	**4.133**	**4.135**	**4.137**	**4.139**	0	0	1	1	1
71.	4.141	4.143	4.145	4.147	4.149	4.151	4.152	4.154	4.156	4.158	0	0	1	1	1
72.	4.160	4.162	4.164	4.166	4.168	4.170	4.172	4.174	4.176	4.177	0	0	1	1	1
73.	4.179	4.181	4.183	4.185	4.187	4.189	4.191	4.193	4.195	4.196	0	0	1	1	1
74.	4.198	4.200	4.202	4.204	4.206	4.208	4.210	4.212	4.213	4.215	0	0	1	1	1
75.	4.217	4.219	4.221	4.223	4.225	4.227	4.228	4.230	4.232	4.234	0	0	1	1	1
76.	4.236	4.238	4.240	4.241	4.243	4.245	4.247	4.249	4.251	4.252	0	0	1	1	1
77.	4.254	4.256	4.258	4.260	4.262	4.264	4.265	4.267	4.269	4.271	0	0	1	1	1
78.	4.273	4.274	4.276	4.278	4.280	4.282	4.284	4.285	4.287	4.289	0	0	1	1	1
79.	4.291	4.293	4.294	4.296	4.298	4.300	4.302	4.303	4.305	4.307	0	0	1	1	1
80.	**4.309**	**4.311**	**4.312**	**4.314**	**4.316**	**4.318**	**4.320**	**4.321**	**4.323**	**4.325**	0	0	1	1	1
81.	4.327	4.329	4.330	4.332	4.334	4.336	4.337	4.339	4.341	4.343	0	0	1	1	1
82.	4.344	4.346	4.348	4.350	4.352	4.353	4.355	4.357	4.359	4.360	0	0	1	1	1
83.	4.362	4.364	4.366	4.367	4.369	4.371	4.373	4.374	4.376	4.378	0	0	1	1	1
84.	4.380	4.381	4.383	4.385	4.386	4.388	4.390	4.392	4.393	4.395	0	0	1	1	1
85.	4.397	4.399	4.400	4.402	4.404	4.405	4.407	4.409	4.411	4.412	0	0	1	1	1
86.	4.414	4.416	4.417	4.419	4.421	4.423	4.424	4.426	4.428	4.429	0	0	1	1	1
87.	4.431	4.433	4.434	4.436	4.438	4.440	4.441	4.443	4.445	4.446	0	0	1	1	1
88.	4.448	4.450	4.451	4.453	4.455	4.456	4.458	4.460	4.461	4.463	0	0	1	1	1
89.	4.465	4.466	4.468	4.470	4.471	4.473	4.475	4.476	4.478	4.480	0	0	0	1	1
90.	**4.481**	**4.483**	**4.485**	**4.486**	**4.488**	**4.490**	**4.491**	**4.493**	**4.495**	**4.496**	0	0	0	1	1
91.	4.498	4.500	4.501	4.503	4.505	4.506	4.508	4.509	4.511	4.513	0	0	0	1	1
92.	4.514	4.516	4.518	4.519	4.521	4.523	4.524	4.526	4.527	4.529	0	0	0	1	1
93.	4.531	4.532	4.534	4.536	4.537	4.539	4.540	4.542	4.544	4.545	0	0	0	1	1
94.	4.547	4.548	4.550	4.552	4.553	4.555	4.556	4.558	4.560	4.561	0	0	0	1	1
95.	4.563	4.565	4.566	4.568	4.569	4.571	4.572	4.574	4.576	4.577	0	0	0	1	1
96.	4.579	4.580	4.582	4.584	4.585	4.587	4.588	4.590	4.592	4.593	0	0	0	1	1
97.	4.595	4.596	4.598	4.599	4.601	4.603	4.604	4.606	4.607	4.609	0	0	0	1	1
98.	4.610	4.612	4.614	4.615	4.617	4.618	4.620	4.621	4.623	4.625	0	0	0	1	1
99.	4.626	4.628	4.629	4.631	4.632	4.634	4.635	4.637	4.638	4.640	0	0	0	1	1
N	0	1	2	3	4	5	6	7	8	9	1	2	3	4	5
											Prop. parts				

Table 4. Cube roots of numbers 100 to 549—*Continued*

N	0	1	2	3	4	5	6	7	8	9	Prop. parts 1	2	3	4	5
10	**4.642**	**4.657**	**4.672**	**4.688**	**4.703**	**4.718**	**4.733**	**4.747**	**4.762**	**4.777**	1	3	4	6	7
11	4.791	4.806	4.820	4.835	4.849	4.863	4.877	4.891	4.905	4.919	1	3	4	6	7
12	4.932	4.946	4.960	4.973	4.987	5.000	5.013	5.027	5.040	5.053	1	3	4	5	7
13	5.066	5.079	5.092	5.104	5.117	5.130	5.143	5.155	5.168	5.180	1	3	4	5	6
14	5.192	5.205	5.217	5.229	5.241	5.254	5.266	5.278	5.290	5.301	1	2	4	5	6
15	5.313	5.325	5.337	5.348	5.360	5.372	5.383	5.395	5.406	5.418	1	2	3	5	6
16	5.429	5.440	5.451	5.463	5.474	5.485	5.496	5.507	5.518	5.529	1	2	3	4	6
17	5.540	5.550	5.561	5.572	5.583	5.593	5.604	5.615	5.625	5.636	1	2	3	4	5
18	5.646	5.657	5.667	5.677	5.688	5.698	5.708	5.718	5.729	5.739	1	2	3	4	5
19	5.749	5.759	5.769	5.779	5.789	5.799	5.809	5.819	5.828	5.838	1	2	3	4	5
20	**5.848**	**5.858**	**5.867**	**5.877**	**5.887**	**5.896**	**5.906**	**5.915**	**5.925**	**5.934**	1	2	3	4	5
21	5.944	5.953	5.963	5.972	5.981	5.991	6.000	6.009	6.018	6.028	1	2	3	4	5
22	6.037	6.046	6.055	6.064	6.073	6.082	6.091	6.100	6.109	6.118	1	2	3	4	5
23	6.127	6.136	6.145	6.153	6.162	6.171	6.180	6.188	6.197	6.206	1	2	3	4	4
24	6.214	6.223	6.232	6.240	6.249	6.257	6.266	6.274	6.283	6.291	1	2	3	3	4
25	6.300	6.308	6.316	6.325	6.333	6.341	6.350	6.358	6.366	6.374	1	2	2	3	4
26	6.383	6.391	6.399	6.407	6.415	6.423	6.431	6.439	6.447	6.455	1	2	2	3	4
27	6.463	6.471	6.479	6.487	6.495	6.503	6.511	6.519	6.527	6.534	1	2	2	3	4
28	6.542	6.550	6.558	6.565	6.573	6.581	6.589	6.596	6.604	6.611	1	2	2	3	4
29	6.619	6.627	6.634	6.642	6.649	6.657	6.664	6.672	6.679	6.687	1	2	2	3	4
30	**6.694**	**6.702**	**6.709**	**6.717**	**6.724**	**6.731**	**6.739**	**6.746**	**6.753**	**6.761**	1	1	2	3	4
31	6.768	6.775	6.782	6.790	6.797	6.804	6.811	6.818	6.826	6.833	1	1	2	3	4
32	6.840	6.847	6.854	6.861	6.868	6.875	6.882	6.889	6.896	6.903	1	1	2	3	4
33	6.910	6.917	6.924	6.931	6.938	6.945	6.952	6.959	6.966	6.973	1	1	2	3	3
34	6.980	6.986	6.993	7.000	7.007	7.014	7.020	7.027	7.034	7.041	1	1	2	3	3
35	7.047	7.054	7.061	7.067	7.074	7.081	7.087	7.094	7.101	7.107	1	1	2	3	3
36	7.114	7.120	7.127	7.133	7.140	7.147	7.153	7.160	7.166	7.173	1	1	2	3	3
37	7.179	7.186	7.192	7.198	7.205	7.211	7.218	7.224	7.230	7.237	1	1	2	3	3
38	7.243	7.250	7.256	7.262	7.268	7.275	7.281	7.287	7.294	7.300	1	1	2	3	3
39	7.306	7.312	7.319	7.325	7.331	7.337	7.343	7.350	7.356	7.362	1	1	2	2	3
40	**7.368**	**7.374**	**7.380**	**7.386**	**7.393**	**7.399**	**7.405**	**7.411**	**7.417**	**7.423**	1	1	2	2	3
41	7.429	7.435	7.441	7.447	7.453	7.459	7.465	7.471	7.477	7.483	1	1	2	2	3
42	7.489	7.495	7.501	7.507	7.513	7.518	7.524	7.530	7.536	7.542	1	1	2	2	3
43	7.548	7.554	7.560	7.565	7.571	7.577	7.583	7.589	7.594	7.600	1	1	2	2	3
44	7.606	7.612	7.617	7.623	7.629	7.635	7.640	7.646	7.652	7.657	1	1	2	2	3
45	7.663	7.669	7.674	7.680	7.686	7.691	7.697	7.703	7.708	7.714	1	1	2	2	3
46	7.719	7.725	7.731	7.736	7.742	7.747	7.753	7.758	7.764	7.769	1	1	2	2	3
47	7.775	7.780	7.786	7.791	7.797	7.802	7.808	7.813	7.819	7.824	1	1	2	2	3
48	7.830	7.835	7.841	7.846	7.851	7.857	7.862	7.868	7.873	7.878	1	1	2	2	3
49	7.884	7.889	7.894	7.900	7.905	7.910	7.916	7.921	7.926	7.932	1	1	2	2	3
50	**7.937**	**7.942**	**7.948**	**7.953**	**7.958**	**7.963**	**7.969**	**7.974**	**7.979**	**7.984**	1	1	2	2	3
51	7.990	7.995	8.000	8.005	8.010	8.016	8.021	8.026	8.031	8.036	1	1	2	2	3
52	8.041	8.047	8.052	8.057	8.062	8.067	8.072	8.077	8.082	8.088	1	1	2	2	3
53	8.093	8.098	8.103	8.108	8.113	8.118	8.123	8.128	8.133	8.138	1	1	2	2	3
54	8.143	8.148	8.153	8.158	8.163	8.168	8.173	8.178	8.183	8.188	0	1	1	2	2
N	0	1	2	3	4	5	6	7	8	9	1	2	3	4	5
											Prop. parts				

Table 4. Cube roots of numbers 550 to 999—*Continued*

N	0	1	2	3	4	5	6	7	8	9	Prop. parts				
											1	2	3	4	5
55	8.193	8.198	8.203	8.208	8.213	8.218	8.223	8.228	8.233	8.238	0	1	1	2	2
56	8.243	8.247	8.252	8.257	8.262	8.267	8.272	8.277	8.282	8.286	0	1	1	2	2
57	8.291	8.296	8.301	8.306	8.311	8.316	8.320	8.325	8.330	8.335	0	1	1	2	2
58	8.340	8.344	8.349	8.354	8.359	8.363	8.368	8.373	8.378	8.382	0	1	1	2	2
59	8.387	8.392	8.397	8.401	8.406	8.411	8.416	8.420	8.425	8.430	0	1	1	2	2
60	**8.434**	**8.439**	**8.444**	**8.448**	**8.453**	**8.458**	**8.462**	**8.467**	**8.472**	**8.476**	**0**	**1**	**1**	**2**	**2**
61	8.481	8.486	8.490	8.495	8.499	8.504	8.509	8.513	8.518	8.522	0	1	1	2	2
62	8.527	8.532	8.536	8.541	8.545	8.550	8.554	8.559	8.564	8.568	0	1	1	2	2
63	8.573	8.577	8.582	8.586	8.591	8.595	8.600	8.604	8.609	8.613	0	1	1	2	2
64	8.618	8.622	8.627	8.631	8.636	8.640	8.645	8.649	8.653	8.658	0	1	1	2	2
65	8.662	8.667	8.671	8.676	8.680	8.685	8.689	8.693	8.698	8.702	0	1	1	2	2
66	8.707	8.711	8.715	8.720	8.724	8.729	8.733	8.737	8.742	8.746	0	1	1	2	2
67	8.750	8.755	8.759	8.763	8.768	8.772	8.776	8.781	8.785	8.789	0	1	1	2	2
68	8.794	8.798	8.802	8.807	8.811	8.815	8.819	8.824	8.828	8.832	0	1	1	2	2
69	8.837	8.841	8.845	8.849	8.854	8.858	8.862	8.866	8.871	8.875	0	1	1	2	2
70	**8.879**	**8.883**	**8.887**	**8.892**	**8.896**	**8.900**	**8.904**	**8.909**	**8.913**	**8.917**	**0**	**1**	**1**	**2**	**2**
71	8.921	8.925	8.929	8.934	8.938	8.942	8.946	8.950	8.955	8.959	0	1	1	2	2
72	8.963	8.967	8.971	8.975	8.979	8.984	8.988	8.992	8.996	9.000	0	1	1	2	2
73	9.004	9.008	9.012	9.016	9.021	9.025	9.029	9.033	9.037	9.041	0	1	1	2	2
74	9.045	9.049	9.053	9.057	9.061	9.065	9.069	9.073	9.078	9.082	0	1	1	2	2
75	9.086	9.090	9.094	9.098	9.102	9.106	9.110	9.114	9.118	9.122	0	1	1	2	2
76	9.126	9.130	9.134	9.138	9.142	9.146	9.150	9.154	9.158	9.162	0	1	1	2	2
77	9.166	9.170	9.174	9.178	9.182	9.185	9.189	9.193	9.197	9.201	0	1	1	2	2
78	9.205	9.209	9.213	9.217	9.221	9.225	9.229	9.233	9.237	9.240	0	1	1	2	2
79	9.244	9.248	9.252	9.256	9.260	9.264	9.268	9.272	9.275	9.279	0	1	1	2	2
80	**9.283**	**9.287**	**9.291**	**9.295**	**9.299**	**9.302**	**9.306**	**9.310**	**9.314**	**9.318**	**0**	**1**	**1**	**2**	**2**
81	9.322	9.326	9.329	9.333	9.337	9.341	9.345	9.348	9.352	9.356	0	1	1	2	2
82	9.360	9.364	9.368	9.371	9.375	9.379	9.383	9.386	9.390	9.394	0	1	1	2	2
83	9.398	9.402	9.405	9.409	9.413	9.417	9.420	9.424	9.428	9.432	0	1	1	2	2
84	9.435	9.439	9.443	9.447	9.450	9.454	9.458	9.462	9.465	9.469	0	1	1	1	2
85	9.473	9.476	9.480	9.484	9.488	9.491	9.495	9.499	9.502	9.506	0	1	1	1	2
86	9.510	9.513	9.517	9.521	9.524	9.528	9.532	9.535	9.539	9.543	0	1	1	1	2
87	9.546	9.550	9.554	9.557	9.561	9.565	9.568	9.572	9.576	9.579	0	1	1	1	2
88	9.583	9.586	9.590	9.594	9.597	9.601	9.605	9.608	9.612	9.615	0	1	1	1	2
89	9.619	9.623	9.626	9.630	9.633	9.637	9.641	9.644	9.648	9.651	0	1	1	1	2
90	**9.655**	**9.658**	**9.662**	**9.666**	**9.669**	**9.673**	**9.676**	**9.680**	**9.683**	**9.687**	**0**	**1**	**1**	**1**	**2**
91	9.691	9.694	9.698	9.701	9.705	9.708	9.712	9.715	9.719	9.722	0	1	1	1	2
92	9.726	9.729	9.733	9.736	9.740	9.743	9.747	9.750	9.754	9.758	0	1	1	1	2
93	9.761	9.764	9.768	9.771	9.775	9.778	9.782	9.785	9.789	9.792	0	1	1	1	2
94	9.796	9.799	9.803	9.806	9.810	9.813	9.817	9.820	9.824	9.827	0	1	1	1	2
95	**9.830**	**9.834**	**9.837**	**9.841**	**9.844**	**9.848**	**9.851**	**9.855**	**9.858**	**9.861**	**0**	**1**	**1**	**1**	**2**
96	9.865	9.868	9.872	9.875	9.879	9.882	9.885	9.889	9.892	9.896	0	1	1	1	2
97	9.899	9.902	9.906	9.909	9.913	9.916	9.919	9.923	9.926	9.930	0	1	1	1	2
98	9.933	9.936	9.940	9.943	9.946	9.950	9.953	9.956	9.960	9.963	0	1	1	1	2
99	9.967	9.970	9.973	9.977	9.980	9.983	9.987	9.990	9.993	9.997	0	1	1	1	2
N	0	1	2	3	4	5	6	7	8	9	1	2	3	4	5
											Prop. parts				

Table 5. Three-halves powers, numbers 1.00 to 4.49

N	0	1	2	3	4	5	6	7	8	9	Prop. parts				
											1	2	3	4	5
1.0	**1.000**	**1.015**	**1.030**	**1.045**	**1.061**	**1.076**	**1.091**	**1.107**	**1.122**	**1.138**	**2**	**3**	**5**	**6**	**8**
1.1	1.154	1.169	1.185	1.201	1.217	1.233	1.249	1.266	1.282	1.298	2	3	5	6	8
1.2	1.315	1.331	1.348	1.364	1.381	1.398	1.414	1.431	1.448	1.465	2	3	5	7	8
1.3	1.482	1.499	1.517	1.534	1.551	1.569	1.586	1.604	1.621	1.639	2	3	5	7	9
1.4	1.657	1.674	1.692	1.710	1.728	1.746	1.764	1.782	1.800	1.819	2	4	5	7	9
1.5	1.837	1.856	1.874	1.893	1.911	1.930	1.948	1.967	1.986	2.005	2	4	6	7	9
1.6	2.024	2.043	2.062	2.081	2.100	2.119	2.139	2.158	2.178	2.197	2	4	6	8	10
1.7	2.217	2.236	2.256	2.275	2.295	2.315	2.335	2.355	2.375	2.395	2	4	6	8	10
1.8	2.415	2.435	2.455	2.476	2.496	2.516	2.537	2.557	2.578	2.598	2	4	6	8	10
1.9	2.619	2.640	2.660	2.681	2.702	2.723	2.744	2.765	2.786	2.807	2	4	6	8	10
2.0	**2.828**	**2.850**	**2.871**	**2.892**	**2.914**	**2.935**	**2.957**	**2.978**	**3.000**	**3.021**	**2**	**4**	**6**	**9**	**11**
2.1	3.043	3.065	3.087	3.109	3.131	3.153	3.175	3.197	3.219	3.241	2	4	7	9	11
2.2	3.263	3.285	3.308	3.330	3.353	3.375	3.398	3.420	3.443	3.465	2	4	7	9	11
2.3	3.488	3.511	3.534	3.557	3.580	3.602	3.626	3.649	3.672	3.695	2	5	7	9	11
2.4	3.718	3.741	3.765	3.788	3.811	3.835	3.858	3.882	3.906	3.929	2	5	7	9	12
2.5	3.953	3.977	4.000	4.024	4.048	4.072	4.096	4.120	4.144	4.168	2	5	7	10	12
2.6	4.192	4.217	4.241	4.265	4.289	4.314	4.338	4.363	4.387	4.412	2	5	7	10	12
2.7	4.437	4.461	4.486	4.511	4.536	4.560	4.585	4.610	4.635	4.660	2	5	7	10	12
2.8	4.685	4.710	4.736	4.761	4.786	4.811	4.837	4.862	4.888	4.913	3	5	8	10	13
2.9	4.939	4.964	4.990	5.015	5.041	5.067	5.093	5.118	5.144	5.170	3	5	8	10	13
3.0	**5.196**	**5.222**	**5.248**	**5.274**	**5.300**	**5.327**	**5.353**	**5.379**	**5.405**	**5.432**	**3**	**5**	**8**	**11**	**13**
3.1	5.458	5.485	5.511	5.538	5.564	5.591	5.617	5.644	5.671	5.698	3	5	8	11	13
3.2	5.724	5.751	5.778	5.805	5.832	5.859	5.886	5.913	5.940	5.968	3	5	8	11	14
3.3	5.995	6.022	6.049	6.077	6.104	6.132	6.159	6.186	6.214	6.242	3	5	8	11	14
3.4	6.269	6.297	6.325	6.352	6.380	6.408	6.436	6.464	6.492	6.520	3	6	8	11	14
3.5	6.548	6.576	6.604	6.632	6.660	6.689	6.717	6.745	6.774	6.802	3	6	8	11	14
3.6	6.831	6.859	6.888	6.916	6.945	6.973	7.002	7.031	7.059	7.088	3	6	9	11	14
3.7	7.117	7.146	7.175	7.204	7.233	7.262	7.291	7.320	7.349	7.378	3	6	9	12	15
3.8	7.408	7.437	7.466	7.495	7.525	7.554	7.584	7.613	7.643	7.672	3	6	9	12	15
3.9	7.702	7.732	7.761	7.791	7.821	7.850	7.880	7.910	7.940	7.970	3	6	9	12	15
4.0	**8.000**	**8.030**	**8.060**	**8.090**	**8.120**	**8.150**	**8.181**	**8.211**	**8.241**	**8.272**	**3**	**6**	**9**	**12**	**15**
4.1	8.302	8.332	8.363	8.393	8.424	8.454	8.485	8.515	8.546	8.577	3	6	9	12	15
4.2	8.607	8.638	8.669	8.700	8.731	8.762	8.793	8.824	8.855	8.886	3	6	9	12	15
4.3	8.917	8.948	8.979	9.010	9.041	9.073	9.104	9.135	9.167	9.198	3	6	9	12	16
4.4	9.230	9.261	9.293	9.324	9.356	9.387	9.419	9.451	9.482	9.514	3	6	9	13	16

Three-halves powers, numbers 0 to 99

N	0.	1.	2.	3.	4.	5.	6.	7.	8.	9.
.....	0.000	1.000	2.828	5.196	8.000	11.18	14.70	18.52	22.63	27.00
1	31.62	36.48	41.57	46.87	52.38	58.09	64.00	70.09	76.37	82.82
2	89.44	96.23	103.2	110.3	117.6	125.0	132.6	140.3	148.2	156.2
3	164.3	172.6	181.0	189.6	198.3	207.1	216.0	225.1	234.2	243.6
4	253.0	262.5	272.2	282.0	291.9	301.9	312.0	322.2	332.6	343.0
5	353.6	364.2	375.0	385.8	396.8	407.9	419.1	430.3	441.7	453.2
6	464.8	476.4	488.2	500.0	512.0	524.0	536.2	548.4	560.7	573.2
7	585.7	598.3	610.9	623.7	636.6	649.5	662.6	675.7	688.9	702.2
8	715.5	729.0	742.5	756.2	769.9	783.7	797.5	811.5	825.5	839.6
9	853.8	868.1	882.4	896.9	911.4	925.9	940.6	955.3	970.2	985.0

Table 6. Fifth powers, numbers 1.0 to 9.9

N	0	1	2	3	4	5	6	7	8	9
1.	1.0000	1.6105	2.4883	3.7129	5.3782	7.5938	10.486	14.199	18.896	24.761
2.	32.000	40.841	51.536	64.363	79.626	97.656	118.81	143.49	172.10	205.11
3.	243.00	286.29	335.54	391.35	454.35	525.22	604.66	693.44	792.35	902.24
4.	1024.0	1158.6	1306.9	1470.1	1649.2	1845.3	2059.6	2293.5	2548.0	2824.8
5.	3125.0	3450.3	3802.0	4182.0	4591.7	5032.8	5507.3	6016.9	6563.6	7149.2
6.	7776.0	8446.0	9161.3	9924.4	10737	11603	12523	13501	14539	15640
7.	16807	18042	19349	20731	22190	23730	25355	27068	28872	30771
8.	32768	34868	37074	39390	41821	44371	47043	49842	52773	55841
9.	59049	62403	65908	69569	73390	77378	81537	85873	90392	95099

Table 7. Five-halves powers numbers 1 to 99

N	0	1	2	3	4	5	6	7	8	9
1.0	1.000	1.269	1.577	1.927	2.319	2.756	3.238	3.768	4.347	4.976
2.0	5.657	6.391	7.179	8.023	8.923	9.882	10.90	11.98	13.12	14.32
3.0	15.59	16.92	18.32	19.78	21.32	22.92	24.59	26.33	28.15	30.04
4.0	32.00	34.04	36.15	38.34	40.61	42.96	45.38	47.89	50.48	53.15
5.0	55.90	58.74	61.66	64.67	67.76	70.94	74.21	77.57	81.02	84.55
6.0	88.18	91.90	95.71	96.62	103.6	107.7	111.9	116.2	120.6	125.1
7.0	129.6	134.3	139.1	144.0	149.0	154.0	159.2	164.5	169.9	175.4
8.0	181.0	186.7	192.5	198.5	204.5	210.6	216.9	223.3	229.7	236.3
9.0	243.0	249.8	256.7	263.8	270.9	278.2	285.5	293.0	300.7	308.4
1	316.2	401.8	498.8	609.8	733.4	871.4	1024	1192	1375	1574
2	1789	2021	2270	2537	2822	3125	3447	3788	4149	4529
3	4930	5351	5793	6256	6741	7247	7776	8327	8901	9499
4	10119	10764	11432	12125	12842	13584	14351	15144	15963	16807
5	17678	18575	19499	20450	21428	22434	23468	24529	25619	26738
6	27885	29062	30268	31503	32768	34063	35388	36744	38130	39548
7	40996	42476	43988	45531	47106	48714	50354	52027	53732	55471
8	57243	59049	60888	62762	64669	66611	68588	70599	72645	74727
9	76843	78996	81184	83408	85668	87965	90298	92668	95075	97519

Table 8. Fifth roots and two-fifths powers

n	$n^{1/5}$	$n^{2/5}$	n	$n^{1/5}$	$n^{2/5}$	n	$n^{1/5}$	$n^{2/5}$	n	$n^{1/5}$	$n^{2/5}$
0.01	.3981	.1585	0.65	.9175	.8417	7.5	1.496	2.239	85	2.432	5.912
.02	.4573	.2091	.70	.9311	.8670	8.0	1.516	2.297	90	2.460	6.049
.03	.4959	.2460	.75	.9441	.8913	8.5	1.534	2.354	95	2.486	6.181
.04	.5253	.2759	.80	.9564	.9146	9.0	1.552	2.408	100	2.512	6.310
.05	.5493	.3017	.85	.9680	.9371	9.5	1.569	2.461	150	2.724	7.421
.06	.5697	.3245	.90	.9791	.9587	10	1.585	2.512	200	2.885	8.326
.07	.5857	.3452	.95	.9898	.9797	15	1.719	2.954	250	3.017	9.103
.08	.6034	.3641	1.0	1.000	1.000	20	1.821	3.314	300	3.129	9.791
.09	.6178	.3817	1.5	1.085	1.176	25	1.904	3.624	350	3.227	10.41
0.10	.6310	.3981	2.0	1.149	1.320	30	1.974	3.898	400	3.314	10.99
.15	.6843	.4682	2.5	1.201	1.443	35	2.036	4.146	450	3.393	11.52
.20	.7248	.5253	3.0	1.246	1.552	40	2.091	4.373	500	3.466	12.01
.25	.7579	.5743	3.5	1.285	1.651	45	2.141	4.584	550	3.532	12.48
.30	.7860	.6178	4.0	1.320	1.741	50	2.187	4.782	600	3.594	12.92
.35	.8106	.6571	4.5	1.351	1.825	55	2.229	4.968	650	3.652	13.34
.40	.8326	.6931	5.0	1.380	1.904	60	2.268	5.144	700	3.707	13.74
.45	.8524	.7266	5.5	1.406	1.978	65	2.305	5.311	750	3.758	14.13
.50	.8706	.7579	6.0	1.431	2.048	70	2.339	5.471	800	3.807	14.50
.55	.8873	.7873	6.5	1.454	2.114	75	2.371	5.624	850	3.854	14.85
.60	.9029	.8152	7.0	1.476	2.178	80	2.402	5.771	900	3.898	15.19

Table 9. Reciprocals of numbers *a*

N	0	1	2	3	4	5	6	7	8	9	Prop. parts 1	2	3	4	5
1.0	**1.000**	**.9901**	**.9804**	**.9709**	**.9615**	**.9524**	**.9434**	**.9346**	**.9259**	**.9174**					
1.1	.9091	.9009	.8929	.8850	.8772	.8696	.8621	.8547	.8475	.8403					
1.2	.8333	.8264	.8197	.8130	.8065	.8000	.7937	.7874	.7813	.7752					
1.3	.7692	.7634	.7576	.7519	.7463	.7407	.7353	.7299	.7246	.7194					
1.4	.7143	.7092	.7042	.6993	.6944	.6897	.6849	.6803	.6757	.6711					
1.5	.6667	.6623	.6579	.6536	.6494	.6452	.6410	.6369	.6329	.6289					
1.6	.6250	.6211	.6173	.6135	.6098	.6061	.6024	.5988	.5952	.5917	4	7	11		
1.7	.5882	.5848	.5814	.5780	.5747	.5714	.5682	.5650	.5618	.5587	3	7	10		
1.8	.5556	.5525	.5495	.5464	.5435	.5405	.5376	.5348	.5319	.5291	3	6	9		
1.9	.5263	.5236	.5208	.5181	.5155	.5128	.5102	.5076	.5051	.5025	3	5	8	11	13
2.0	**.5000**	**.4975**	**.4950**	**.4926**	**.4902**	**.4878**	**.4854**	**.4831**	**.4808**	**.4785**	**2**	**5**	**7**	**10**	**12**
2.1	.4762	.4739	.4717	.4695	.4673	.4651	.4630	.4608	.4587	.4566	2	4	6	9	11
2.2	.4545	.4525	.4505	.4484	.4464	.4444	.4425	.4405	.4386	.4367	2	4	6	8	10
2.3	.4348	.4329	.4310	.4292	.4274	.4255	.4237	.4219	.4202	.4184	2	4	5	7	9
2.4	.4167	.4149	.4132	.4115	.4098	.4082	.4065	.4049	.4032	.4016	2	3	5	7	8
2.5	.4000	.3984	.3968	.3953	.3937	.3922	.3906	.3891	.3876	.3861	2	3	5	6	8
2.6	.3846	.3831	.3817	.3802	.3788	.3774	.3759	.3745	.3731	.3717	1	3	4	6	7
2.7	.3704	.3690	.3676	.3663	.3650	.3636	.3623	.3610	.3597	.3584	1	3	4	5	7
2.8	.3571	.3559	.3546	.3534	.3521	.3509	.3497	.3484	.3472	.3460	1	2	4	5	6
2.9	.3448	.3436	.3425	.3413	.3401	.3390	.3378	.3367	.3356	.3344	1	2	3	5	6
3.0	**.3333**	**.3322**	**.3311**	**.3300**	**.3289**	**.3279**	**.3268**	**.3257**	**.3247**	**.3236**	**1**	**2**	**3**	**4**	**5**
3.1	.3226	.3215	.3205	.3195	.3185	.3175	.3165	.3155	.3145	.3135	1	2	3	4	5
3.2	.3125	.3115	.3106	.3096	.3086	.3077	.3067	.3058	.3049	.3040	1	2	3	4	5
3.3	.3030	.3021	.3012	.3003	.2994	.2985	.2976	.2967	.2959	.2950	1	2	3	4	4
3.4	.2941	.2933	.2924	.2915	.2907	.2899	.2890	.2882	.2874	.2865	1	2	3	3	4
3.5	.2857	.2849	.2841	.2833	.2825	.2817	.2809	.2801	.2793	.2786	1	2	2	3	4
3.6	.2778	.2770	.2762	.2755	.2747	.2740	.2732	.2725	.2717	.2710	1	2	2	3	4
3.7	.2703	.2695	.2688	.2681	.2674	.2667	.2660	.2653	.2646	.2639	1	1	2	3	4
3.8	.2632	.2625	.2618	.2611	.2604	.2597	.2591	.2584	.2577	.2571	1	1	2	3	3
3.9	.2564	.2558	.2551	.2545	.2538	.2532	.2525	.2519	.2513	.2506	1	1	2	3	3
4.0	**.2500**	**.2494**	**.2488**	**.2481**	**.2475**	**.2469**	**.2463**	**.2457**	**.2451**	**.2445**	**1**	**1**	**2**	**2**	**3**
4.1	.2439	.2433	.2427	.2421	.2415	.2410	.2404	.2398	.2392	.2387	1	1	2	2	3
4.2	.2381	.2375	.2370	.2364	.2358	.2353	.2347	.2342	.2336	.2331	1	1	2	2	3
4.3	.2326	.2320	.2315	.2309	.2304	.2299	.2294	.2288	.2283	.2278	1	1	2	2	3
4.4	.2273	.2268	.2262	.2257	.2252	.2247	.2242	.2237	.2232	.2227	1	1	2	2	3
4.5	.2222	.2217	.2212	.2208	.2203	.2198	.2193	.2188	.2183	.2179	0	1	1	2	2
4.6	.2174	.2169	.2165	.2160	.2155	.2151	.2146	.2141	.2137	.2132	0	1	1	2	2
4.7	.2128	.2123	.2119	.2114	.2110	.2105	.2100	.2096	.2092	.2088	0	1	1	2	2
4.8	.2083	.2079	.2075	.2070	.2066	.2062	.2058	.2053	.2049	.2045	0	1	1	2	2
4.9	.2041	.2037	.2033	.2028	.2024	.2020	.2016	.2012	.2008	.2004	0	1	1	2	2
5.0	**.2000**	**.1996**	**.1992**	**.1988**	**.1984**	**.1980**	**.1976**	**.1972**	**.1969**	**.1965**	**0**	**1**	**1**	**2**	**2**
5.1	.1961	.1957	.1953	.1949	.1946	.1942	.1938	.1934	.1931	.1927	0	1	1	2	2
5.2	.1923	.1919	.1916	.1912	.1908	.1905	.1901	.1898	.1894	.1890	0	1	1	1	2
5.3	.1887	.1883	.1880	.1876	.1873	.1869	.1866	.1862	.1859	.1855	0	1	1	1	2
5.4	.1852	.1848	.1845	.1842	.1838	.1835	.1832	.1828	.1825	.1821	0	1	1	1	2
N	0	1	2	3	4	5	6	7	8	9	1	2	3	4	5

Interpolate

a **CAUTION.** Tabular values ***decrease*** with ***increasing*** *N*, hence corrections for a fourth figure 1, 2, 3, 4, 5 must be ***subtracted*** from the tabular value given for the first three figures of *N*. For a fourth figure 6, 7, 8, 9, ***add*** to the tabular value given for the next larger number the correction for 4, 3, 2, 1, respectively. If decimal place in *N* is moved to *right* (or *left*), move it the same number of places to *left* (or *right*) in tabular value.

Table 9. Reciprocals of numbers—*Continued*

N	0	1	2	3	4	5	6	7	8	9	Prop. parts				
											1	2	3	4	5
5.5	.1818	.1815	.1812	.1808	.1805	.1802	.1799	.1795	.1792	.1789	0	1	1	1	2
5.6	.1786	.1783	.1779	.1776	.1773	.1770	.1767	.1764	.1761	.1757	0	1	1	1	2
5.7	.1754	.1751	.1748	.1745	.1742	.1739	.1736	.1733	.1730	.1727	0	1	1	1	2
5.8	.1724	.1721	.1718	.1715	.1712	.1709	.1706	.1704	.1701	.1698	0	1	1	1	1
5.9	.1695	.1692	.1689	.1686	.1684	.1681	.1678	.1675	.1672	.1669	0	1	1	1	1
6.0	**.1667**	**.1664**	**.1661**	**.1658**	**.1656**	**.1653**	**.1650**	**.1647**	**.1645**	**.1642**	**0**	**1**	**1**	**1**	**1**
6.1	.1639	.1637	.1634	.1631	.1629	.1626	.1623	.1621	.1618	.1616	0	1	1	1	1
6.2	.1613	.1610	.1608	.1605	.1603	.1600	.1597	.1595	.1592	.1590	0	1	1	1	1
6.3	.1587	.1585	.1582	.1580	.1577	.1575	.1572	.1570	.1567	.1565	0	0	1	1	1
6.4	.1563	.1560	.1558	.1555	.1553	.1550	.1548	.1546	.1543	.1541	0	0	1	1	1
6.5	.1538	.1536	.1534	.1531	.1529	.1527	.1524	.1522	.1520	.1517	0	0	1	1	1
6.6	.1515	.1513	.1511	.1508	.1506	.1504	.1502	.1499	.1497	.1495	0	0	1	1	1
6.7	.1493	.1490	.1488	.1486	.1484	.1481	.1479	.1477	.1475	.1473	0	0	1	1	1
6.8	.1471	.1468	.1466	.1464	.1462	.1460	.1458	.1456	.1453	.1451	0	0	1	1	1
6.9	.1449	.1447	.1445	.1443	.1441	.1439	.1437	.1435	.1433	.1431	0	0	1	1	1
7.0	**.1429**	**.1427**	**.1425**	**.1422**	**.1420**	**.1418**	**.1416**	**.1414**	**.1412**	**.1410**	**0**	**0**	**1**	**1**	**1**
7.1	.1408	.1406	.1404	.1403	.1401	.1399	.1397	.1395	.1393	.1391	0	0	1	1	1
7.2	.1389	.1387	.1385	.1383	.1381	.1379	.1377	.1376	.1374	.1372	0	0	1	1	1
7.3	.1370	.1368	.1366	.1364	.1362	.1361	.1359	.1357	.1355	.1353	0	0	1	1	1
7.4	.1351	.1350	.1348	.1346	.1344	.1342	.1340	.1339	.1337	.1335	0	0	1	1	1
7.5	.1333	.1332	.1330	.1328	.1326	.1325	.1323	.1321	.1319	.1318	0	0	1	1	1
7.6	.1316	.1314	.1312	.1311	.1309	.1307	.1305	.1304	.1302	.1300	0	0	1	1	1
7.7	.1299	.1297	.1295	.1294	.1292	.1290	.1289	.1287	.1285	.1284	0	0	1	1	1
7.8	.1282	.1280	.1279	.1277	.1276	.1274	.1272	.1271	.1269	.1267	0	0	0	1	1
7.9	.1266	.1264	.1263	.1261	.1259	.1258	.1256	.1255	.1253	.1252	0	0	0	1	1
8.0	**.1250**	**.1248**	**.1247**	**.1245**	**.1244**	**.1242**	**.1241**	**.1239**	**.1238**	**.1236**	**0**	**0**	**0**	**1**	**1**
8.1	.1235	.1233	.1232	.1230	.1229	.1227	.1225	.1224	.1222	.1221	0	0	0	1	1
8.2	.1220	.1218	.1217	.1215	.1214	.1212	.1211	.1209	.1208	.1206	0	0	0	1	1
8.3	.1205	.1203	.1202	.1200	.1199	.1198	.1196	.1195	.1193	.1192	0	0	0	1	1
8.4	.1190	.1189	.1188	.1186	.1185	.1183	.1182	.1181	.1179	.1178	0	0	0	1	1
8.5	.1176	.1175	.1174	.1172	.1171	.1170	.1168	.1167	.1166	.1164	0	0	0	1	1
8.6	.1163	.1161	.1160	.1159	.1157	.1156	.1155	.1153	.1152	.1151	0	0	0	1	1
8.7	.1149	.1148	.1147	.1145	.1144	.1143	.1142	.1140	.1139	.1138	0	0	0	1	1
8.8	.1136	.1135	.1134	.1133	.1131	.1130	.1129	.1127	.1126	.1125	0	0	0	1	1
8.9	.1124	.1122	.1121	.1120	.1119	.1117	.1116	.1115	.1114	.1112	0	0	0	0	1
9.0	**.1111**	**.1110**	**.1109**	**.1107**	**.1106**	**.1105**	**.1104**	**.1103**	**.1101**	**.1100**	**0**	**0**	**0**	**0**	**1**
9.1	.1099	.1098	.1096	.1095	.1094	.1093	.1092	.1091	.1089	.1088	0	0	0	0	1
9.2	.1087	.1086	.1085	.1083	.1082	.1081	.1080	.1079	.1078	.1076	0	0	0	0	1
9.3	.1075	.1074	.1073	.1072	.1071	.1070	.1068	.1067	.1066	.1065	0	0	0	0	1
9.4	.1064	.1063	.1062	.1060	.1059	.1058	.1057	.1056	.1055	.1054	0	0	0	0	1
9.5	.1053	.1052	.1050	.1049	.1048	.1047	.1046	.1045	.1044	.1043	0	0	0	0	1
9.6	.1042	.1041	.1040	.1038	.1037	.1036	.1035	.1034	.1033	.1032	0	0	0	0	1
9.7	.1031	.1030	.1029	.1028	.1027	.1026	.1025	.1024	.1022	.1021	0	0	0	0	1
9.8	.1020	.1019	.1018	.1017	.1016	.1015	.1014	.1013	.1012	.1011	0	0	0	0	1
9.9	.1010	.1009	.1008	.1007	.1006	.1005	.1004	.1003	.1002	.1001	0	0	0	0	1
N	0	1	2	3	4	5	6	7	8	9	1	2	3	4	5

CAUTION. See Note *a*.

Table 10. Circles, circumferences and areas (diameters in hundredths) *a*

Diameter	Circumference	Area	Diameter	Circumference	Area	Diameter	Circumference	Area	Diameter	Circumference	Area
1.00	**3.142**	**.7854**	**1.50**	**4.712**	**1.767**	**2.00**	**6.283**	**3.142**	**2.50**	**7.854**	**4.909**
1.01	3.173	.8012	1.51	4.744	1.791	2.01	6.315	3.173	2.51	7.885	4.948
1.02	3.204	.8171	1.52	4.775	1.815	2.02	6.346	3.205	2.52	7.917	4.988
1.03	3.236	.8332	1.53	4.807	1.839	2.03	6.377	3.237	2.53	7.948	5.027
1.04	3.267	.8495	1.54	4.838	1.863	2.04	6.409	3.269	2.54	7.980	5.067
1.05	3.299	.8659	1.55	4.869	1.887	2.05	6.440	3.301	2.55	8.011	5.107
1.06	3.330	.8825	1.56	4.901	1.911	2.06	6.472	3.333	2.56	8.043	5.147
1.07	3.362	.8992	1.57	4.932	1.936	2.07	6.503	3.365	2.57	8.074	5.187
1.08	3.393	.9161	1.58	4.964	1.961	2.08	6.535	3.398	2.58	8.105	5.228
1.09	3.424	.9331	1.59	4.995	1.986	2.09	6.566	3.431	2.59	8.137	5.269
1.10	**3.456**	**.9503**	**1.60**	**5.027**	**2.011**	**2.10**	**6.597**	**3.464**	**2.60**	**8.168**	**5.309**
1.11	3.487	.9677	1.61	5.058	2.036	2.11	6.629	3.497	2.61	8.200	5.350
1.12	3.519	.9852	1.62	5.089	2.061	2.12	6.660	3.530	2.62	8.231	5.391
1.13	3.550	1.003	1.63	5.121	2.087	2.13	6.692	3.563	2.63	8.262	5.433
1.14	3.581	1.021	1.64	5.152	2.112	2.14	6.723	3.597	2.64	8.294	5.474
1.15	3.613	1.039	1.65	5.184	2.138	2.15	6.754	3.631	2.65	8.325	5.515
1.16	3.644	1.057	1.66	5.215	2.164	2.16	6.786	3.664	2.66	8.357	5.557
1.17	3.676	1.075	1.67	5.246	2.190	2.17	6.817	3.698	2.67	8.388	5.599
1.18	3.707	1.094	1.68	5.278	2.217	2.18	6.849	3.733	2.68	8.419	5.641
1.19	3.738	1.112	1.69	5.309	2.243	2.19	6.880	3.767	2.69	8.451	5.683
1.20	**3.770**	**1.131**	**1.70**	**5.341**	**2.270**	**2.20**	**6.912**	**3.801**	**2.70**	**8.482**	**5.726**
1.21	3.801	1.150	1.71	5.372	2.297	2.21	6.943	3.836	2.71	8.514	5.768
1.22	3.833	1.169	1.72	5.404	2.324	2.22	6.974	3.871	2.72	8.545	5.811
1.23	3.864	1.188	1.73	5.435	2.351	2.23	7.006	3.906	2.73	8.577	5.853
1.24	3.896	1.208	1.74	5.466	2.378	2.24	7.037	3.941	2.74	8.608	5.896
1.25	3.927	1.227	1.75	5.498	2.405	2.25	7.069	3.976	2.75	8.639	5.940
1.26	3.958	1.247	1.76	5.529	2.433	2.26	7.100	4.012	2.76	8.671	5.983
1.27	3.990	1.267	1.77	5.561	2.461	2.27	7.131	4.047	2.77	8.702	6.026
1.28	4.021	1.287	1.78	5.592	2.488	2.28	7.163	4.083	2.78	8.734	6.070
1.29	4.053	1.307	1.79	5.623	2.516	2.29	7.194	4.119	2.79	8.765	6.114
1.30	**4.084**	**1.327**	**1.80**	**5.655**	**2.545**	**2.30**	**7.226**	**4.155**	**2.80**	**8.796**	**6.158**
1.31	4.115	1.348	1.81	5.686	2.573	2.31	7.257	4.191	2.81	8.828	6.202
1.32	4.147	1.368	1.82	5.718	2.602	2.32	7.288	4.227	2.82	8.859	6.246
1.33	4.178	1.389	1.83	5.749	2.630	2.33	7.320	4.264	2.83	8.891	6.290
1.34	4.210	1.410	1.84	5.781	2.659	2.34	7.351	4.301	2.84	8.922	6.335
1.35	4.241	1.431	1.85	5.812	2.688	2.35	7.383	4.337	2.85	8.954	6.379
1.36	4.273	1.453	1.86	5.843	2.717	2.36	7.414	4.374	2.86	8.985	6.424
1.37	4.304	1.474	1.87	5.875	2.746	2.37	7.446	4.412	2.87	9.016	6.469
1.38	4.335	1.496	1.88	5.906	2.776	2.38	7.477	4.449	2.88	9.048	6.514
1.39	4.367	1.517	1.89	5.938	2.806	2.39	7.508	4.486	2.89	9.079	6.560
1.40	**4.398**	**1.539**	**1.90**	**5.969**	**2.835**	**2.40**	**7.540**	**4.524**	**2.90**	**9.111**	**6.605**
1.41	4.430	1.561	1.91	6.000	2.865	2.41	7.571	4.562	2.91	9.142	6.651
1.42	4.461	1.584	1.92	6.032	2.895	2.42	7.603	4.600	2.92	9.173	6.697
1.43	4.492	1.606	1.93	6.063	2.926	2.43	7.634	4.638	2.93	9.205	6.743
1.44	4.524	1.629	1.94	6.095	2.956	2.44	7.665	4.676	2.94	9.236	6.789
1.45	4.555	1.651	1.95	6.126	2.986	2.45	7.697	4.714	2.95	9.268	6.835
1.46	4.587	1.674	1.96	6.158	3.017	2.46	7.728	4.753	2.96	9.299	6.881
1.47	4.618	1.697	1.97	6.189	3.048	2.47	7.760	4.792	2.97	9.331	6.928
1.48	4.650	1.720	1.98	6.220	3.079	2.48	7.791	4.831	2.98	9.362	6.975
1.49	4.681	1.744	1.99	6.252	3.110	2.49	7.823	4.870	2.99	9.393	7.022

a Move decimal point one place in *circumference*, two places in *area*, if decimal point is moved one place in D. If circumference C or area A is given, diameter D is found by $D = 0.31831C = 1.12838\sqrt{A}$.

Table 10. Circles, circumferences and areas (diameters in hundredths)—*Continued*

Diameter	Circumference	Area	Diameter	Circumference	Area	Diameter	Circumference	Area	Diameter	Circumference	Area
3.00	**9.425**	**7.069**	**3.50**	**11.00**	**9.621**	**4.00**	**12.57**	**12.57**	**4.50**	**14.14**	**15.90**
3.01	9.456	7.116	3.51	11.03	9.676	4.01	12.60	12.63	4.51	14.17	15.98
3.02	9.488	7.163	3.52	11.06	9.731	4.02	12.63	12.69	4.52	14.20	16.05
3.03	9.519	7.211	3.53	11.09	9.787	4.03	12.66	12.76	4.53	14.23	16.12
3.04	9.550	7.258	3.54	11.12	9.842	4.04	12.69	12.82	4.54	14.26	16.19
3.05	9.582	7.306	3.55	11.15	9.898	4.05	12.72	12.88	4.55	14.29	16.26
3.06	9.613	7.354	3.56	11.18	9.954	4.06	12.75	12.95	4.56	14.33	16.33
3.07	9.645	7.402	3.57	11.22	10.01	4.07	12.79	13.01	4.57	14.36	16.40
3.08	9.676	7.451	3.58	11.25	10.07	4.08	12.82	13.07	4.58	14.39	16.47
3.09	9.708	7.499	3.59	11.28	10.12	4.09	12.85	13.14	4.59	14.42	16.55
3.10	**9.739**	**7.548**	**3.60**	**11.31**	**10.18**	**4.10**	**12.88**	**13.20**	**4.60**	**14.45**	**16.62**
3.11	9.770	7.596	3.61	11.34	10.24	4.11	12.91	13.27	4.61	14.48	16.69
3.12	9.802	7.645	3.62	11.37	10.29	4.12	12.94	13.33	4.62	14.51	16.76
3.13	9.833	7.694	3.63	11.40	10.35	4.13	12.97	13.40	4.63	14.55	16.84
3.14	9.865	7.744	3.64	11.44	10.41	4.14	13.01	13.46	4.64	14.58	16.91
3.15	9.896	7.793	3.65	11.47	10.46	4.15	13.04	13.53	4.65	14.61	16.98
3.16	9.927	7.843	3.66	11.50	10.52	4.16	13.07	13.59	4.66	14.64	17.06
3.17	9.959	7.892	3.67	11.53	10.58	4.17	13.10	13.66	4.67	14.67	17.13
3.18	9.990	7.942	3.68	11.56	10.64	4.18	13.13	13.72	4.68	14.70	17.20
3.19	10.02	7.992	3.69	11.59	10.69	4.19	13.16	13.79	4.69	14.73	17.28
3.20	**10.05**	**8.042**	**3.70**	**11.62**	**10.75**	**4.20**	**13.19**	**13.85**	**4.70**	**14.77**	**17.35**
3.21	10.08	8.093	3.71	11.66	10.81	4.21	13.23	13.92	4.71	14.80	17.42
3.22	10.12	8.143	3.72	11.69	10.87	4.22	13.26	13.99	4.72	14.83	17.50
3.23	10.15	8.194	3.73	11.72	10.93	4.23	13.29	14.05	4.73	14.86	17.57
3.24	10.18	8.245	3.74	11.75	10.99	4.24	13.32	14.12	4.74	14.89	17.65
3.25	10.21	8.296	3.75	11.78	11.04	4.25	13.35	14.19	4.75	14.92	17.72
3.26	10.24	8.347	3.76	11.81	11.10	4.26	13.38	14.25	4.76	14.95	17.80
3.27	10.27	8.398	3.77	11.84	11.16	4.27	13.41	14.32	4.77	14.99	17.87
3.28	10.30	8.450	3.78	11.88	11.22	4.28	13.45	14.39	4.78	15.02	17.95
3.29	10.34	8.501	3.79	11.91	11.28	4.29	13.48	14.45	4.79	15.05	18.02
3.30	**10.37**	**8.553**	**3.80**	**11.94**	**11 34**	**4.30**	**13.51**	**14.52**	**4.80**	**15.08**	**18.10**
3.31	10.40	8.605	3.81	11.97	11.40	4.31	13.54	14.59	4.81	15.11	18.17
3.32	10.43	8.657	3.82	12.00	11.46	4.32	13.57	14.66	4.82	15.14	18.25
3.33	10.46	8.709	3.83	12.03	11.52	4.33	13.60	14.73	4.83	15.17	18.32
3.34	10.49	8.762	3.84	12.06	11.58	4.34	13.63	14.79	4.84	15.21	18.40
3.35	10.52	8.814	3.85	12.10	11.64	4.35	13.67	14.86	4.85	15.24	18.47
3.36	10.56	8.867	3.86	12.13	11.70	4.36	13.70	14.93	4.86	15.27	18.55
3.37	10.59	8.920	3.87	12.16	11.76	4.37	13.73	15.00	4.87	15.30	18.63
3.38	10.62	8.973	3.88	12.19	11.82	4.38	13.76	15.07	4.88	15.33	18.70
3.39	10.65	9.026	3.89	12.22	11.88	4.39	13.79	15.14	4.89	15.36	18.78
3.40	**10.68**	**9.079**	**3.90**	**12.25**	**11.95**	**4.40**	**13.82**	**15.21**	**4.90**	**15.39**	**18.86**
3.41	10.71	9.133	3.91	12.28	12.01	4.41	13.85	15.27	4.91	15.43	18.93
3.42	10.74	9.186	3.92	12.32	12.07	4.42	13.89	15.34	4.92	15.46	19.01
3.43	10.78	9.240	3.93	12.35	12.13	4.43	13.92	15.41	4.93	15.49	19.09
3.44	10.81	9.294	3.94	12.38	12.19	4.44	13.95	15.48	4.94	15.52	19.17
3.45	10.84	9.348	3.95	12.41	12.25	4.45	13.98	15.55	4.95	15.55	19.24
3.46	10.87	9.402	3.96	12.44	12.32	4.46	14.01	15.62	4.96	15.58	19.32
3.47	10.90	9.457	3.97	12.47	12.38	4.47	14.04	15.69	4.97	15.61	19.40
3.48	10.93	9.511	3.98	12.50	12.44	4.48	14.07	15.76	4.98	15.65	19.48
3.49	10.96	9.566	3.99	12.53	12.50	4.49	14.11	15.83	4.99	15.68	19.56

Table 10. Circles, circumferences and areas (diameters in hundredths)—*Continued*

Diameter	Circumference	Area	Diameter	Circumference	Area	Diameter	Circumference	Area	Diameter	Circumference	Area
5.00	**15.71**	**19.63**	**5.50**	**17.28**	**23.76**	**6.00**	**18.85**	**28.27**	**6.50**	**20.42**	**33.18**
5.01	15.74	19.71	5.51	17.31	23.84	6.01	18.88	28.37	6.51	20.45	33.29
5.02	15.77	19.79	5.52	17.34	23.93	6.02	18.91	28.46	6.52	20.48	33.39
5.03	15.80	19.87	5.53	17.37	24.02	6.03	18.94	28.56	6.53	20.51	33.49
5.04	15.83	19.95	5.54	17.40	24.11	6.04	18.98	28.65	6.54	20.55	33.59
5.05	15.87	20.03	5.55	17.44	24.19	6.05	19.01	28.75	6.55	20.58	33.70
5.06	15.90	20.11	5.56	17.47	24.28	6.06	19.04	28.84	6.56	20.61	33.80
5.07	15.93	20.19	5.57	17.50	24.37	6.07	19.07	28.94	6.57	20.64	33.90
5.08	15.96	20.27	5.58	17.53	24.45	6.08	19.10	29.03	6.58	20.67	34.00
5.09	15.99	20.35	5.59	17.56	24.54	6.09	19.13	29.13	6.59	20.70	34.11
5.10	**16.02**	**20.43**	**5.60**	**17.59**	**24.63**	**6.10**	**19.16**	**29.22**	**6.60**	**20.73**	**34.21**
5.11	16.05	20.51	5.61	17.62	24.72	6.11	19.20	29.32	6.61	20.77	34.32
5.12	16.08	20.59	5.62	17.66	24.81	6.12	19.23	29.42	6.62	20.80	34.42
5.13	16.12	20.67	5.63	17.69	24.89	6.13	19.26	29.51	6.63	20.83	34.52
5.14	16.15	20.75	5.64	17.72	24.98	6.14	19.29	29.61	6.64	20.86	34.63
5.15	16.18	20.83	5.65	17.75	25.07	6.15	19.32	29.71	6.65	20.89	34.73
5.16	16.21	20.91	5.66	17.78	25.16	6.16	19.35	29.80	6.66	20.92	34.84
5.17	16.24	20.99	5.67	17.81	25.25	6.17	19.38	29.90	6.67	20.95	34.94
5.18	16.27	21.07	5.68	17.84	25.34	6.18	19.42	30.00	6.68	20.99	35.05
5.19	16.30	21.16	5.69	17.88	25.43	6.19	19.45	30.09	6.69	21.02	35.15
5.20	**16.34**	**21.24**	**5.70**	**17.91**	**25.52**	**6.20**	**19.48**	**30.19**	**6.70**	**21.05**	**35.26**
5.21	16.37	21.32	5.71	17.94	25.61	6.21	19.51	30.29	6.71	21.08	35.36
5.22	16.40	21.40	5.72	17.97	25.70	6.22	19.54	30.39	6.72	21.11	35.47
5.23	16.43	21.48	5.73	18.00	25.79	6.23	19.57	30.48	6.73	21.14	35.57
5.24	16.46	21.56	5.74	18.03	25.88	6.24	19.60	30.58	6.74	21.17	35.68
5.25	16.49	21.65	5.75	18.06	25.97	6.25	19.63	30.68	6.75	21.21	35.78
5.26	16.52	21.73	5.76	18.10	26.06	6.26	19.67	30.78	6.76	21.24	35.89
5.27	16.56	21.81	5.77	18.13	26.15	6.27	19.70	30.88	6.77	21.27	36.00
5.28	16.59	21.90	5.78	18.16	26.24	6.28	19.73	30.97	6.78	21.30	36.10
5.29	16.62	21.98	5.79	18.19	26.33	6.29	19.76	31.07	6.79	21.33	36.21
5.30	**16.65**	**22.06**	**5.80**	**18.22**	**26.42**	**6.30**	**19.79**	**31.17**	**6.80**	**21.36**	**36.32**
5.31	16.68	22.15	5.81	18.25	26.51	6.31	19.82	31.27	6.81	21.39	36.42
5.32	16.71	22.23	5.82	18.28	26.60	6.32	19.85	31.37	6.82	21.43	36.53
5.33	16.74	22.31	5.83	18.32	26.69	6.33	19.89	31.47	6.83	21.46	36.64
5.34	16.78	22.40	5.84	18.35	26.79	6.34	19.92	31.57	6.84	21.49	36.75
5.35	16.81	22.48	5.85	18.38	26.88	6.35	19.95	31.67	6.85	21.52	36.85
5.36	16.84	22.56	5.86	18.41	26.97	6.36	19.98	31.77	6.86	21.55	36.96
5.37	16.87	22.65	5.87	18.44	27.06	6.37	20.01	31.87	6.87	21.58	37.07
5.38	16.90	22.73	5.88	18.47	27.15	6.38	20.04	31.97	6.88	21.61	37.18
5.39	16.93	22.82	5.89	18.50	27.25	6.39	20.07	32.07	6.89	21.65	37.28
5.40	**16.96**	**22 90**	**5.90**	**18.54**	**27.34**	**6.40**	**20.11**	**32 17**	**6.90**	**21.68**	**37.39**
5.41	17.00	22.99	5.91	18.57	27.43	6.41	20.14	32.27	6.91	21.71	37.50
5.42	17.03	23.07	5.92	18.60	27.53	6.42	20.17	32.37	6.92	21.74	37.61
5.43	17.06	23.16	5.93	18.63	27.62	6.43	20.20	32.47	6.93	21.77	37.72
5.44	17.09	23.24	5.94	18.66	27.71	6.44	20.23	32.57	6.94	21.80	37.83
5.45	17.12	23.33	5.95	18.69	27.81	6.45	20.26	32.67	6.95	21.83	37.94
5.46	17.15	23.41	5.96	18.72	27.90	6.46	20.29	32.78	6.96	21.87	38.05
5.47	17.18	23.50	5.97	18.76	27.99	6.47	20.33	32.88	6.97	21.90	38.16
5.48	17.22	23.59	5.98	18.79	28.09	6.48	20.36	32.98	6.98	21.93	38.26
5.49	17.25	23.67	5.99	18.82	28.18	6.49	20.39	33.08	6.99	21.96	38.37

Table 10. Circles, circumferences and areas (diameters in hundredths)—*Continued*

Diam-eter	Cir-cum-ference	Area	Diam-eter	Cir-cum-ference	Area	Diam-eter	Cir-cum-ference	Area	Diam-eter	Cir-cum-ference	Area
7.00	**21.99**	**38.48**	**7.50**	**23.56**	**44.18**	**8.00**	**25.13**	**50.27**	**8.50**	**26.70**	**56.75**
7.01	22.02	38.59	7.51	23.59	44.30	8.01	25.16	50.39	8.51	26.73	56.88
7.02	22.05	38.70	7.52	23.62	44.41	8.02	25.20	50.52	8.52	26.77	57.01
7.03	22.09	38.82	7.53	23.66	44.53	8.03	25.23	50.64	8.53	26.80	57.15
7.04	22.12	38.93	7.54	23.69	44.65	8.04	25.26	50.77	8.54	26.83	57.28
7.05	22.15	39.04	7.55	23.72	44.77	8.05	25.29	50.90	8.55	26.86	57.41
7.06	22.18	39.15	7.56	23.75	44.89	8.06	25.32	51.02	8.56	26.89	57.55
7.07	22.21	39.26	7.57	23.78	45.01	8.07	25.35	51.15	8.57	26.92	57.68
7.08	22.24	39.37	7.58	23.81	45.13	8.08	25.38	51.28	8.58	26.95	57.82
7.09	22.27	39.48	7.59	23.84	45.25	8.09	25.42	51.40	8.59	26.99	57.95
7.10	**22.31**	**39.59**	**7.60**	**23.88**	**45.36**	**8.10**	**25.45**	**51.53**	**8.60**	**27.02**	**58.09**
7.11	22.34	39.70	7.61	23.91	45.48	8.11	25.48	51.66	8.61	27.05	58.22
7.12	22.37	39.82	7.62	23.94	45.60	8.12	25.51	51.78	8.62	27.08	58.36
7.13	22.40	39.93	7.63	23.97	45.72	8.13	25.54	51.91	8.63	27.11	58.49
7.14	22.43	40.04	7.64	24.00	45.84	8.14	25.57	52.04	8.64	27.14	58.63
7.15	22.46	40.15	7.65	24.03	45.96	8.15	25.60	52.17	8.65	27.17	58.77
7.16	22.49	40.26	7.66	24.06	46.08	8.16	25.64	52.30	8.66	27.21	58.90
7.17	22.53	40.38	7.67	24.10	46.20	8.17	25.67	52.42	8.67	27.24	59.04
7.18	22.56	40.49	7.68	24.13	46.32	8.18	25.70	52.55	8.68	27.27	59.17
7.19	22.59	40.60	7.69	24.16	46.45	8.19	25.73	52.68	8.69	27.30	59.31
7.20	**22.62**	**40.72**	**7.70**	**24.19**	**46.57**	**8.20**	**25.76**	**52.81**	**8.70**	**27.33**	**59.45**
7.21	22.65	40.83	7.71	24.22	46.69	8.21	25.79	52.94	8.71	27.36	59.58
7.22	22.68	40.94	7.72	24.25	46.81	8.22	25.82	53.07	8.72	27.39	59.72
7.23	22.71	41.06	7.73	24.28	46.93	8.23	25.86	53.20	8.73	27.43	59.86
7.24	22.75	41.17	7.74	24.32	47.05	8.24	25.89	53.33	8.74	27.46	59.99
7.25	22.78	41.28	7.75	24.35	47.17	8.25	25.92	53.46	8.75	27.49	60.13
7.26	22.81	41.40	7.76	24.38	47.29	8.26	25.95	53.59	8.76	27.52	60.27
7.27	22.84	41.51	7.77	24.41	47.42	8.27	25.98	53.72	8.77	27.55	60.41
7.28	22.87	41.62	7.78	24.44	47.54	8.28	26.01	53.85	8.78	27.58	60.55
7.29	22.90	41.74	7.79	24.47	47.66	8.29	26.04	53.98	8.79	27.61	60.68
7.30	**22.93**	**41.85**	**7.80**	**24.50**	**47.78**	**8.30**	**26.08**	**54.11**	**8.80**	**27.65**	**60.82**
7.31	22.97	41.97	7.81	24.54	47.91	8.31	26.11	54.24	8.81	27.68	60.96
7.32	23.00	42.08	7.82	24.57	48.03	8.32	26.14	54.37	8.82	27.71	61.10
7.33	23.03	42.20	7.83	24.60	48.15	8.33	26.17	54.50	8.83	27.74	61.24
7.34	23.06	42.31	7.84	24.63	48.28	8.34	26.20	54.63	8.84	27.77	61.38
7.35	23.09	42.43	7.85	24.66	48.40	8.35	26.23	54.76	8.85	27.80	61.51
7.36	23.12	42.54	7.86	24.69	48.52	8.36	26.26	54.89	8.86	27.83	61.65
7.37	23.15	42.66	7.87	24.72	48.65	8.37	26.30	55.02	8.87	27.87	61.79
7.38	23.18	42.78	7.88	24.76	48.77	8.38	26.33	55.15	8.88	27.90	61.93
7.39	23.22	42.89	7.89	24.79	48.89	8.39	26.36	55.29	8.89	27.93	62.07
7.40	**23.25**	**43.01**	**7.90**	**24.82**	**49.02**	**8.40**	**26.39**	**55.42**	**8.90**	**27.96**	**62.21**
7.41	23.28	43.12	7.91	24.85	49.14	8.41	26.42	55.55	8.91	27.99	62.35
7.42	23.31	43.24	7.92	24.88	49.27	8.42	26.45	55.68	8.92	28.02	62.49
7.43	23.34	43.36	7.93	24.91	49.39	8.43	26.48	55.81	8.93	28.05	62.63
7.44	23.37	43.47	7.94	24.94	49.51	8.44	26.52	55.95	8.94	28.09	62.77
7.45	23.40	43.59	7.95	24.98	49.64	8.45	26.55	56.08	8.95	28.12	62.91
7.46	23.44	43.71	7.96	25.01	49.76	8.46	26.58	56.21	8.96	28.15	63.05
7.47	23.47	43.83	7.97	25.04	49.89	8.47	26.61	56.35	8.97	28.18	63.19
7.48	23.50	43.94	7.98	25.07	50.01	8.48	26.64	56.48	8.98	28.21	63.33
7.49	23.53	44.06	7.99	25.10	50.14	8.49	26.67	56.61	8.99	28.24	63.48

Table 10. Circles, circumferences and areas (diameters in hundredths)—*Continued*

Diameter	Circumference	Area	Diameter	Circumference	Area	Diameter	Circumference	Area	Diameter	Circumference	Area
9.00	**28.27**	**63.62**	9.25	29.06	67.20	**9.50**	**29.85**	**70.88**	9.75	30.63	74.66
9.01	28.31	63.76	9.26	29.09	67.35	9.51	29.88	71.03	9.76	30.66	74.82
9.02	28.34	63.90	9.27	29.12	67.49	9.52	29.91	71.18	9.77	30.69	74.97
9.03	28.37	64.04	9.28	29.15	67.64	9.53	29.94	71.33	9.78	30.72	75.12
9.04	28.40	64.18	9.29	29.19	67.78	9.54	29.97	71.48	9.79	30.76	75.28
9.05	28.43	64.33	**9.30**	**29.22**	**67.93**	9.55	30.00	71.63	**9.80**	**30.79**	**75.43**
9.06	28.46	64.47	9.31	29.25	68.08	9.56	30.03	71.78	9.81	30.82	75.58
9.07	28.49	64.61	9.32	29.28	68.22	9.57	30.07	71.93	9.82	30.85	75.74
9.08	28.53	64.75	9.33	29.31	68.37	9.58	30.10	72.08	9.83	30.88	75.89
9.09	28.56	64.90	9.34	29.34	68.51	9.59	30.13	72.23	9.84	30.91	76.05
9.10	**28.59**	**65.04**	9.35	29.37	68.66	**9.60**	**30.16**	**72.38**	9.85	30.94	76.20
9.11	28.62	65.18	9.36	29.41	68.81	9.61	30.19	72.53	9.86	30.98	76.36
9.12	28.65	65.33	9.37	29.44	68.96	9.62	30.22	72.68	9.87	31.01	76.51
9.13	28.68	65.47	9.38	29.47	69.10	9.63	30.25	72.84	9.88	31.04	76.67
9.14	28.71	65.61	9.39	29.50	69.25	9.64	30.28	72.99	9.89	31.07	76.82
9.15	28.75	65.76	**9.40**	**29.53**	69.40	9.65	30.32	73.14	**9.90**	**31.10**	**76.98**
9.16	28.78	65.90	9.41	29.56	69.55	9.66	30.35	73.29	9.91	31.13	77.13
9.17	28.81	66.04	9.42	29.59	69.69	9.67	30.38	73.44	9.92	31.16	77.29
9.18	28.84	66.19	9.43	29.63	69.84	9.68	30.41	73.59	9.93	31.20	77.44
9.19	28.87	66.33	9.44	29.66	69.99	9.69	30.44	73.75	9.94	31.23	77.60
9.20	**28.90**	**66.48**	9.45	29.69	70.14	**9.70**	**30 47**	**73.90**	9.95	31.26	77.76
9.21	28.93	66.62	9.46	29.72	70.29	9.71	30.50	74.05	9.96	31.29	77.91
9.22	28.97	66.77	9.47	29.75	70.44	9.72	30.54	74.20	9.97	31.32	78.07
9.23	29.00	66.91	9.48	29.78	70.58	9.73	30.57	74.36	9.98	31.35	78.23
9.24	29.03	67.06	9.49	29.81	70.73	9.74	30.60	74.51	9.99	31.38	78.38

Table 11. Circles, circumferences and areas (diameters in eighths)

Diameter	Circumference	Area	Diameter	Circumference	Area	Diameter	Circumference	Area	Diameter	Circumference	Area
0	.....	.....	3	9.425	7.069	6	18.85	28.27	9	28.27	63.62
1/8	.3927	.01227	1/8	9.817	7.670	1/8	19.24	29.46	1/8	28.67	65.40
1/4	.7854	.04909	1/4	10.21	8.296	1/4	19.63	30.68	1/4	29.06	67.20
3/8	1.178	.1104	3/8	10.60	8.946	3/8	20.03	31.92	3/8	29.45	69.03
1/2	1.571	.1963	1/2	11.00	9.621	1/2	20.42	33.18	1/2	29.85	70.88
5/8	1.963	.3068	5/8	11.39	10.32	5/8	20.81	34.47	5/8	30.24	72.76
3/4	2.356	.4418	3/4	11.78	11.04	3/4	21.21	35.78	3/4	30.63	74.66
7/8	2.749	.6013	7/8	12.17	11.79	7/8	21.60	37.12	7/8	31.02	76.59
1	3.142	.7854	4	12.57	12.57	7	21.99	38.48	10	31.42	78.54
1/8	3.534	.9940	1/8	12.96	13.36	1/8	22.38	39.87	1/8	31.81	80.52
1/4	3.927	1.227	1/4	13.35	14.19	1/4	22.78	41.28	1/4	32.20	82.52
3/8	4.320	1.485	3/8	13.74	15.03	3/8	23.17	42.72	3/8	32.59	84.54
1/2	4.712	1.767	1/2	14.14	15.90	1/2	23.56	44.18	1/2	32.99	86.59
5/8	5.105	2.074	5/8	14.53	16.80	5/8	23.95	45.66	5/8	33.38	88.66
3/4	5.498	2.405	3/4	14.92	17.72	3/4	24.35	47.17	3/4	33.77	90.76
7/8	5.891	2.761	7/8	15.32	18.67	7/8	24.74	48.71	7/8	34.16	92.89
2	6.283	3.142	5	15.71	19.63	8	25.13	50.27	11	34.56	95.03
1/8	6.676	3.547	1/8	16.10	20.63	1/8	25.52	51.85	1/8	34.95	97.21
1/4	7.069	3.976	1/4	16.49	21.65	1/4	25.92	53.46	1/4	35.34	99.40
3/8	7.461	4.430	3/8	16.89	22.69	3/8	26.31	55.09	3/8	35.74	101.6
1/2	7.854	4.909	1/2	17.28	23.76	1/2	26.70	56.75	1/2	36.13	103.9
5/8	8.247	5.412	5/8	17.67	24.85	5/8	27.10	58.43	5/8	36.52	106.1
3/4	8.639	5.940	3/4	18.06	25.97	3/4	27.49	60.13	3/4	36.91	108.4
7/8	9 032	6.492	7/8	18.46	27.11	7/8	27.88	61.86	7/8	37.31	110.8

Table 12. Circular segments *a*

Central angle in degrees	Height / R	Chord / R	Height / Chord	Area / R^2	Central angle in degrees	Height / R	Chord / R	Height / Chord	Area / R^2
1	.0000	.0175	.0022	.00000	46	.0795	.7815	.1017	.04176
2	.0002	.0349	.0044	.00000	47	.0829	.7975	.1040	.04448
3	.0003	.0524	.0066	.00001	48	.0865	.8135	.1063	.04731
4	.0006	.0698	.0087	.00003	49	.0900	.8294	.1086	.05025
5	.0010	.0872	.0109	.00006	50	.0937	.8452	.1108	.05331
6	.0014	.1047	.0131	.00010	51	.0974	.8610	.1131	.05649
7	.0019	.1221	.0153	.00015	52	.1012	.8767	.1154	.05978
8	.0024	.1395	.0175	.00023	53	.1051	.8924	.1177	.06319
9	.0031	.1569	.0196	.00032	54	.1090	.9080	.1200	.06673
10	.0038	.1743	.0218	.00044	55	.1130	.9235	.1223	.07039
11	.0046	.1917	.0240	.00059	56	.1171	.9389	.1247	.07417
12	.0055	.2091	.0262	.00076	57	.1212	.9543	.1270	.07808
13	.0064	.2264	.0284	.00097	58	.1254	.9696	.1293	.08212
14	.0075	.2437	.0306	.00121	59	.1296	.9848	.1316	.08629
15	.0086	.2611	.0328	.00149	60	.1340	1.0000	.1340	.09059
16	.0097	.2783	.0350	.00181	61	.1384	1.015	.1363	.09502
17	.0110	.2956	.0372	.00217	62	.1428	1.030	.1387	.09958
18	.0123	.3129	.0394	.00257	63	.1474	1.045	.1410	.10428
19	.0137	.3301	.0415	.00302	64	.1520	1.060	.1434	.10911
20	.0152	.3473	.0437	.00352	65	.1566	1.075	.1457	.11408
21	.0167	.3645	.0459	.00408	66	.1613	1.089	.1481	.11919
22	.0184	.3816	.0481	.00468	67	.1661	1.104	.1505	.12443
23	.0201	.3987	.0503	.00535	68	.1710	1.118	.1529	.12982
24	.0219	.4158	.0526	.00607	69	.1759	1.133	.1553	.13535
25	.0237	.4329	.0548	.00686	70	.1808	1.147	.1576	.14102
26	.0256	.4499	.0570	.00771	71	.1859	1.161	.1601	.14683
27	.0276	.4669	.0592	.00862	72	.1910	1.176	.1625	.15279
28	.0297	.4838	.0614	.00961	73	.1961	1.190	.1649	.15889
29	.0319	.5008	.0636	.01067	74	.2014	1.204	.1673	.16514
30	.0341	.5176	.0658	.01180	75	.2066	1.218	.1697	.17154
31	.0364	.5345	.0680	.01301	76	.2120	1.231	.1722	.17808
32	.0387	.5513	.0703	.01429	77	.2174	1.245	.1746	.18477
33	.0412	.5680	.0725	.01566	78	.2229	1.259	.1771	.19160
34	.0437	.5847	.0747	.01711	79	.2284	1.272	.1795	.19859
35	.0463	.6014	.0770	.01864	80	.2340	1.286	.1820	.20573
36	.0489	.6180	.0792	.02027	81	.2396	1.299	.1845	.21301
37	.0517	.6346	.0814	.02198	82	.2453	1.312	.1869	.22045
38	.0545	.6511	.0837	.02378	83	.2510	1.325	.1894	.22804
39	.0574	.6676	.0859	.02568	84	.2569	1.338	.1919	.23578
40	.0603	.6840	.0882	.02767	85	.2627	1.351	.1944	.24367
41	.0633	.7004	.0904	.02976	86	.2686	1.364	.1970	.25171
42	.0664	.7167	.0927	.03195	87	.2746	1.377	.1995	.25990
43	.0696	.7330	.0949	.03425	88	.2807	1.389	.2020	.26825
44	.0728	.7492	.0972	.03664	89	.2867	1.402	.2046	.27675
45	.0761	.7654	.0995	.03915	90	.2929	1.414	.2071	.28540

a To find the height or chord for any radius R, multiply the corresponding tabular number by R To find the area, multiply the tabular number by R^2.

Table 12. Circular segments—*Continued*

Central angle in degrees	Height / R	Chord / R	Height / Chord	Area / R^2	Central angle in degrees	Height / R	Chord / R	Height / Chord	Area / R^2
91	.2991	1.427	.2097	.29420	136	.6254	1.854	.3373	.83949
92	.3053	1.439	.2122	.30316	137	.6335	1.861	.3404	.85455
93	.3116	1.451	.2148	.31226	138	.6416	1.867	.3436	.86971
94	.3180	1.463	.2174	.32152	139	.6498	1.873	.3469	.88497
95	.3244	1.475	.2200	.33093	140	.6580	1.879	.3501	.90034
96	.3309	1.486	.2226	.34050	141	.6662	1.885	.3534	.91580
97	.3374	1.498	.2252	.35021	142	.6744	1.891	.3566	.93135
98	.3439	1.509	.2279	.36008	143	.6827	1.897	.3599	.94700
99	.3506	1.521	.2305	.37009	144	.6910	1.902	.3633	.96274
100	.3572	1.532	.2332	.38026	145	.6993	1.907	.3666	.97858
101	.3639	1.543	.2358	.39058	146	.7076	1.913	.3700	.99449
102	.3707	1.554	.2385	.40104	147	.7160	1.918	.3734	1.0105
103	.3775	1.565	.2412	.41166	148	.7244	1.923	.3768	1.0266
104	.3843	1.576	.2439	.42242	149	.7328	1.927	.3802	1.0428
105	.3912	1.587	.2466	.43333	150	.7412	1.932	.3837	1.0590
106	.3982	1.597	.2493	.44439	151	.7496	1.936	.3871	1.0753
107	.4052	1.608	.2520	.45560	152	.7581	1.941	.3906	1.0917
108	.4122	1.618	.2548	.46695	153	.7666	1.945	.3942	1.1082
109	.4193	1.628	.2575	.47844	154	.7750	1.949	.3977	1.1247
110	.4264	1.638	.2603	.49008	155	.7836	1.953	.4013	1.1413
111	.4336	1.648	.2631	.50187	156	.7921	1.956	.4049	1.1580
112	.4408	1.658	.2659	.51379	157	.8006	1.960	.4085	1.1747
113	.4481	1.668	.2687	.52586	158	.8092	1.963	.4122	1.1915
114	.4554	1.677	.2715	.53807	159	.8178	1.967	.4158	1.2084
115	.4627	1.687	.2743	.55041	160	.8264	1.970	.4195	1.2253
116	.4701	1.696	.2772	.56289	161	.8350	1.973	.4233	1.2422
117	.4775	1.705	.2800	.57551	162	.8436	1.975	.4270	1.2592
118	.4850	1.714	.2829	.58827	163	.8522	1.978	.4308	1.2763
119	.4925	1.723	.2858	.60116	164	.8608	1.981	.4346	1.2934
120	.5000	1.732	.2887	.61418	165	.8695	1.983	.4385	1.3105
121	.5076	1.741	.2916	.62734	166	.8781	1.985	.4424	1.3277
122	.5152	1.749	.2945	.64063	167	.8868	1.987	.4463	1.3449
123	.5228	1.758	.2975	.65404	168	.8955	1.989	.4502	1.3621
124	.5305	1.766	.3004	.66759	169	.9042	1.991	.4542	1.3794
125	.5383	1.774	.3034	.68125	170	.9128	1.992	.4582	1.3967
126	.5460	1.782	.3064	.69505	171	.9215	1.994	.4622	1.4140
127	.5538	1.790	.3094	.70897	172	.9302	1.995	.4663	1.4314
128	.5616	1.798	.3124	.72301	173	.9390	1.996	.4704	1.4488
129	.5695	1.805	.3155	.73716	174	.9477	1.997	.4745	1.4662
130	.5774	1.813	.3185	.75114	175	.9564	1.998	.4786	1.4836
131	.5853	1.820	.3216	.76584	176	.9651	1.999	.4828	1.5010
132	.5933	1.827	.3247	.78034	177	.9738	1.999	.4871	1.5184
133	.6013	1.834	.3278	.79497	178	.9825	2.000	.4914	1.5359
134	.6093	1.841	.3309	.80970	179	.9913	2.000	.4957	1.5533
135	.6173	1.848	.3341	.82454	180	1.000	2.000	.5000	1.5708

Table 13. Spheres, areas and volumes *a*

Diam.	Area	Vol.	Diam.	Area	Vol.	Diam.	Area	Vol.
1.0	**3.142**	**0.5236**	6.5	132.7	143.8	**12.0**	**452.4**	**904.8**
1.1	3.801	0.6969	6.6	136.8	150.5	12.1	460.0	927.6
1.2	4.524	0.9048	6.7	141.0	157.5	12.2	467.6	950.8
1.3	5.309	1.150	6.8	145.3	164.6	12.3	475.3	974.3
1.4	6.158	1.437	6.9	149.6	172.0	12.4	483.1	998.3
1.5	7.069	1.767	**7.0**	**153.9**	**179.6**	12.5	490.9	1023
1.6	8.042	2.145	7.1	158.4	187.4	12.6	498.8	1047
1.7	9.079	2.572	7.2	162.9	195.4	12.7	506.7	1073
1.8	10.18	3.054	7.3	167.4	203.7	12.8	514.7	1098
1.9	11.34	3.591	7.4	172.0	212.2	12.9	522.8	1124
2.0	**12.57**	**4.189**	7.5	176.7	220.9	**13.0**	**530.9**	**1150**
2.1	13.85	4.849	7.6	181.5	229.8	13.1	539.1	1177
2.2	15.21	5.575	7.7	186.3	239.0	13.2	547.4	1204
2.3	16.62	6.371	7.8	191.1	248.5	13.3	555.7	1232
2.4	18.10	7.238	7.9	196.1	258.2	13.4	564.1	1260
2.5	19.64	8.181	**8.0**	**201.1**	**268.1**	13.5	572.6	1288
2.6	21.24	9.203	8.1	206.1	278.3	13.6	581.1	1317
2.7	22.90	10.31	8.2	211.2	288.7	13.7	589.6	1346
2.8	24.63	11.49	8.3	216.4	299.4	13.8	598.3	1376
2.9	26.42	12.77	8.4	221.7	310.3	13.9	607.0	1406
3.0	**28.27**	**14.14**	8.5	227.0	321.6	**14.0**	**615.8**	**1437**
3.1	30.19	15.60	8.6	232.3	333.0	14.1	624.6	1468
3.2	32.17	17.16	8.7	237.8	344.8	14.2	633.5	1499
3.3	34.21	18.82	8.8	243.3	356.8	14.3	642.4	1531
3.4	36.32	20.58	8.9	248.8	369.1	14.4	651.4	1563
3.5	38.48	22.45	**9.0**	**254.5**	**381.7**	14.5	660.5	1596
3.6	40.72	24.43	9.1	260.2	394.6	14.6	669.7	1630
3.7	43.01	26.52	9.2	265.9	497.7	14.7	678.9	1663
3.8	45.36	28.73	9.3	271.7	421.2	14.8	688.1	1697
3.9	47.78	31.06	9.4	277.6	434.9	14.9	697.5	1732
4.0	**50.27**	**33.51**	9.5	283.5	448.9	**15.0**	**706.9**	**1767**
4.1	52.81	36.09	9.6	289.5	463.2	15.1	716.3	1803
4.2	55.42	38.79	9.7	295.6	477.9	15.2	725.8	1839
4.3	58.09	41.63	9.8	301.7	492.8	15.3	735.4	1875
4.4	60.82	44.60	9.9	307.9	508.0	15.4	745.0	1912
4.5	63.62	47.71	**10.0**	**314.2**	**523.6**	15.5	754.8	1950
4.6	66.48	50.97	10.1	320.5	539.5	15.6	764.5	1988
4.7	69.40	54.36	10.2	326.9	555.6	15.7	774.4	2026
4.8	72.38	57.91	10.3	333.3	572.2	15.8	784.3	2065
4.9	75.43	61.60	10.4	339.8	589.0	15.9	794.2	2105
5.0	**78.54**	**65.45**	10.5	346.4	606.1	**16.0**	**804.2**	**2143**
5.1	81.71	69.46	10.6	353.0	623.6	16.1	814.3	2185
5.2	84.95	73.62	10.7	359.7	641.4	16.2	824.5	2226
5.3	88.25	77.95	10.8	366.4	659.6	16.3	834.7	2268
5.4	91.61	82.45	10.9	373.3	678.1	16.4	845.0	2310
5.5	95.03	87.11	**11.0**	**380.1**	**696.9**	16.5	855.3	2352
5.6	98.52	91.95	11.1	387.1	716.1	16.6	865.7	2395
5.7	102.1	96.97	11.2	394.1	735.6	16.7	876.2	2439
5.8	105.7	102.2	11.3	401.2	755.5	16.8	886.7	2483
5.9	109.4	107.5	11.4	408.3	775.7	16.9	897.3	2527
6.0	**113.1**	**113.1**	11.5	415.5	796.3	**17.0**	**907.9**	**2572**
6.1	116.9	118.8	11.6	422.7	817.3	17.1	918.6	2618
6.2	120.8	124.8	11.7	430.1	838.6	17.2	929.4	2664
6.3	124.7	130.9	11.8	437.4	860.3	17.3	940.2	2711
6.4	128.7	137.3	11.9	444.9	882.3	17.4	951.1	2758

a Move decimal point two places in ***area,*** or three places in ***volume,*** if decimal point is moved one place in *D*.

Table 13. Spheres, areas and volumes—*Continued*

Diam.	Area	Vol.	Diam.	Area	Vol.	Diam.	Area	Vol. $\times 10^{-1}$
17.5	962.1	2806	**23.0**	**1662**	**6371**	28.5	2552	1212
17.6	973.1	2855	23.1	1676	6454	28.6	2570	1225
17.7	984.2	2903	23.2	1691	6538	28.7	2588	1238
17.8	995.4	2953	23.3	1706	6623	28.8	2606	1251
17.9	1007	3003	23.4	1720	6709	28.9	2624	1264
18.0	**1018**	**3054**	23.5	1735	6795	**29.0**	**2642**	**1277**
18.1	1029	3105	23.6	1750	6882	29.1	2660	1290
18.2	1041	3157	23.7	1765	6970	29.2	2679	1304
18.3	1052	3209	23.8	1780	7059	29.3	2697	1317
18.4	1064	3262	23.9	1795	7148	29.4	2715	1331
18.5	1075	3315	**24.0**	**1810**	**7238**	29.5	2734	1344
18.6	1087	3369	24.1	1825	7329	29.6	2752	1358
18.7	1099	3424	24.2	1840	7421	29.7	2771	1372
18.8	1110	3479	24.3	1855	7513	29.8	2790	1386
18.9	1122	3535	24.4	1870	7606	29.9	2809	1400
19.0	**1134**	**3591**	24.5	1886	7700	**30.0**	**2827**	**1414**
19.1	1146	3648	24.6	1901	7795	30.1	2846	1428
19.2	1158	3706	24.7	1917	7890	30.2	2865	1442
19.3	1170	3764	24.8	1932	7986	30.3	2884	1457
19.4	1182	3823	24.9	1948	8083	30.4	2903	1471
19.5	1195	3882	**25.0**	**1963**	**8181**	30.5	2922	1486
19.6	1207	3942	25.1	1979	8280	30.6	2942	1500
19.7	1219	4003	25.2	1995	8379	30.7	2961	1515
19.8	1231	4064	25.3	2011	8478	30.8	2980	1530
19.9	1244	4126	25.4	2027	8580	30.9	3000	1545
20.0	**1257**	**4189**	25.5	2043	8682	**31.0**	**3019**	**1560**
20.1	1269	4252	25.6	2059	8785	31.1	3039	1575
20.2	1282	4316	25.7	2075	8888	31.2	3058	1590
20.3	1295	4380	25.8	2091	8992	31.3	3078	1606
20.4	1307	4445	25.9	2107	9097	31.4	3097	1621
20.5	1320	4511	**26.0**	**2124**	**9203**	31.5	3117	1637
20.6	1333	4577	26.1	2140	9309	31.6	3137	1652
20.7	1346	4644	26.2	2157	9417	31.7	3157	1668
20.8	1359	4712	26.3	2173	9525	31.8	3177	1684
20.9	1372	4780	26.4	2190	9634	31.9	3197	1700
21.0	**1385**	**4849**	26.5	2206	9744	**32.0**	**3217**	**1716**
21.1	1399	4919	26.6	2223	9855	32.1	3237	1732
21.2	1412	4989	26.7	2240	9966	32.2	3257	1748
21.3	1425	5060			$V \times 10^{-1}$	32.3	3278	1764
21.4	1439	5131	26.8	2256	1008	32.4	3298	1781
			26.9	2273	1019			
21.5	1452	5204	**27.0**	**2290**	**1031**	32.5	3318	1797
21.6	1466	5277	27.1	2307	1042	32.6	3339	1814
21.7	1479	5350	27.2	2324	1054	32.7	3359	1831
21.8	1493	5425	27.3	2341	1065	32.8	3379	1848
21.9	1507	5500	27.4	2359	1077	32.9	3400	1865
22.0	**1521**	**5575**	27.5	2376	1089	**33.0**	**3421**	**1882**
22.1	1534	5652	27.6	2393	1101	33.1	3441	1899
22.2	1548	5729	27.7	2411	1113	33.2	3462	1916
22.3	1562	5806	27.8	2428	1125	33.3	3484	1933
22.4	1576	5885	27.9	2445	1137	33.4	3505	1951
22.5	1590	5964	**28.0**	**2463**	**1149**	33.5	3526	1968
22.6	1606	6044	28.1	2481	1162	33.6	3547	1986
22.7	1619	6125	28.2	2498	1174	33.7	3568	2004
22.8	1633	6206	28.3	2516	1187	33.8	3589	2022
22.9	1647	6288	28.4	2534	1199	33.9	3610	2040

Table 13. Spheres, areas and volumes—*Continued*

Diam.	Area	Vol. $\times 10^{-1}$	Diam.	Area	Vol. $\times 10^{-1}$	Diam.	Area	Vol. $\times 10^{-1}$
34.0	**3632**	**2058**	39.5	4902	3227	**45.0**	**6362**	**4771**
34.1	3653	2076	39.6	4927	3252	45.1	6390	4803
34.2	3675	2094	39.7	4951	3276	45.2	6418	4835
34.3	3696	2113	39.8	4976	3301	45.3	6447	4867
34.4	3718	2131	39.9	5001	3326	45.4	6475	4900
34.5	3739	2150	**40.0**	**5026**	**3351**	45.5	6504	4932
34.6	3761	2169	40.1	5052	3376	45.6	6533	4965
34.7	3783	2188	40.2	5077	3402	45.7	6561	4997
34.8	3805	2207	40.3	5102	3427	45.8	6590	5030
34.9	3826	2226	40.4	5128	3453	45.9	6619	5063
35.0	**3848**	**2245**	40.5	5153	3478	**46.0**	**6648**	**5097**
35.1	3870	2264	40.6	5178	3504	46.1	6677	5130
35.2	3893	2284	40.7	5204	3530	46.2	6706	5163
35.3	3915	2303	40.8	5230	3556	46.3	6735	5197
35.4	3937	2323	40.9	5255	3582	46.4	6764	5231
35.5	3959	2343	**41.0**	**5281**	**3609**	46.5	6793	5265
35.6	3982	2362	41.1	5307	3635	46.6	6822	5299
35.7	4004	2382	41.2	5333	3662	46.7	6851	5333
35.8	4026	2402	41.3	5359	3688	46.8	6881	5367
35.9	4049	2423	41.4	5385	3715	46.9	6910	5402
36.0	**4072**	**2443**	41.5	5411	3742	**47.0**	**6938**	**5436**
36.1	4094	2463	41.6	5437	3769	47.1	6969	5471
36.2	4117	2484	41.7	5463	3797	47.2	6999	5506
36.3	4140	2504	41.8	5489	3824	47.3	7029	5541
36.4	4162	2525	41.9	5515	3852	47.4	7058	5576
36.5	4185	2546	**42.0**	**5542**	**3879**	47.5	7088	5612
36.6	4208	2567	42.1	5568	3907	47.6	7118	5647
36.7	4231	2588	42.2	5595	3935	47.7	7148	5683
36.8	4254	2609	42.3	5621	3963	47.8	7178	5719
36.9	4278	2631	42.4	5648	3991	47.9	7208	5754
37.0	**4301**	**2652**	42.5	5675	4019	**48.0**	**7238**	**5791**
37.1	4324	2674	42.6	5701	4048	48.1	7268	5827
37.2	4347	2695	42.7	5728	4076	48.2	7299	5863
37.3	4371	2717	42.8	5755	4105	48.3	7329	5900
37.4	4394	2739	42.9	5782	4134	48.4	7359	5937
37.5	4418	2761	**43.0**	**5809**	**4163**	48.5	7390	5973
37.6	4441	2783	43.1	5836	4192	48.6	7420	6010
37.7	4465	2806	43.2	5863	4221	48.7	7451	6048
37.8	4489	2828	43.3	5890	4251	48.8	7481	6085
37.9	4513	2850	43.4	5917	4280	48.9	7512	6122
38.0	**4536**	**2873**	43.5	5945	4310	**49.0**	**7543**	**6160**
38.1	4560	2896	43.6	5972	4340	49.1	7574	6198
38.2	4584	2919	43.7	5999	4370	49.2	7605	6236
38.3	4608	2942	43.8	6027	4400	49.3	7636	6274
38.4	4632	2965	43.9	6055	4430	49.4	7667	6312
38.5	4657	2988	**44.0**	**6082**	**4460**	49.5	7698	6351
38.6	4681	3011	44.1	6110	4491	49.6	7729	6389
38.7	4705	3035	44.2	6138	4521	49.7	7760	6428
38.8	4729	3058	44.3	6165	4552	49.8	7791	6467
38.9	4754	3082	44.4	6193	4583	49.9	7822	6506
39.0	**4778**	**3106**	44.5	6221	4614	**50.0**	**7854**	**6545**
39.1	4803	3130	44.6	6249	4645	50.1	7885	6584
39.2	4827	3154	44.7	6277	4677	50.2	7917	6624
39.3	4852	3178	44.8	6305	4708	50.3	7948	6664
39.4	4877	3202	44.9	6333	4740	50.4	7980	6703

Table 13. Spheres, areas and volumes—*Continued*

Diam.	Area	Vol. $\times 10^{-1}$	Diam.	Area	Vol. $\times 10^{-1}$	Diam.	Area $\times 10^{-1}$	Vol. $\times 10^{-2}$
50.5	8012	6743	56.0	9852	9195	61.5	1188	1218
50.6	8044	6783	56.1	9887	9245	61.6	1192	1224
50.7	8075	6824	56.2	9922	9294	61.7	1196	1230
50.8	8107	6864	56.3	9958	9344	61.8	1200	1236
50.9	8139	6905	56.4	9993	9394	61.9	1204	1242
				A $\times 10^{-1}$				
51.0	8171	6946	56.5	1003	9444	62.0	1208	1248
51.1	8203	6987	56.6	1006	9494	62.1	1212	1254
51.2	8235	7028	56.7	1010	9544	62.2	1216	1260
51.3	8268	7069	56.8	1014	9595	62.3	1219	1266
51.4	8300	7110	56.9	1017	9646	62.4	1223	1272
51.5	8332	7152	57.0	1021	9697	62.5	1227	1278
51.6	8365	7194	57.1	1024	9748	62.6	1231	1284
51.7	8397	7236	57.2	1028	9799	62.7	1235	1291
51.8	8430	7278	57.3	1032	9851	62.8	1239	1297
51.9	8462	7320	57.4	1035	9902	62.9	1243	1303
52.0	8495	7362	57.5	1039	9954	63.0	1247	1309
52.1	8528	7405			V $\times 10^{-2}$	63.1	1251	1315
52.2	8560	7447	57.6	1042	1001	63.2	1255	1322
52.3	8593	7490	57.7	1046	1006	63.3	1259	1328
52.4	8626	7533	57.8	1050	1011	63.4	1263	1334
			57.9	1053	1016			
52.5	8659	7577	58.0	1057	1022	63.5	1267	1341
52.6	8692	7620	58.1	1060	1027	63.6	1271	1347
52.7	8725	7664	58.2	1064	1032	63.7	1275	1353
52.8	8758	7707	58.3	1068	1038	63.8	1279	1360
52.9	8791	7751	58.4	1072	1043	63.9	1283	1366
53.0	8824	7795	58.5	1075	1048	64.0	1287	1373
53.1	8858	7839	58.6	1079	1054	64.1	1291	1379
53.2	8891	7884	58.7	1082	1059	64.2	1295	1385
53.3	8924	7928	58.8	1086	1064	64.3	1299	1392
53.4	8958	7973	58.9	1090	1070	64.4	1303	1398
53.5	8992	8018	59.0	1094	1075	64.5	1307	1405
53.6	9025	8063	59.1	1097	1081	64.6	1311	1412
53.7	9059	8108	59.2	1101	1086	64.7	1315	1418
53.8	9093	8154	59.3	1105	1092	64.8	1319	1425
53.9	9126	8199	59.4	1108	1097	64.9	1323	1431
54.0	9160	8245	59.5	1112	1103	65.0	1327	1438
54.1	9194	8291	59.6	1116	1109	65.1	1332	1445
54.2	9228	8337	59.7	1120	1114	65.2	1336	1451
54.3	9262	8383	59.8	1123	1120	65.3	1340	1458
54.4	9297	8429	59.9	1127	1125	65.4	1344	1465
54.5	9331	8476	60.0	1131	1131	65.5	1348	1471
54.6	9365	8523	60.1	1135	1137	65.6	1352	1478
54.7	9400	8570	60.2	1138	1142	65.7	1356	1485
54.8	9434	8617	60.3	1142	1148	65.8	1360	1492
54.9	9468	8664	60.4	1146	1154	65.9	1364	1498
55.0	9503	8711	60.5	1150	1159	66.0	1368	1505
55.1	9537	8759	60.6	1154	1165	66.1	1373	1512
55.2	9572	8807	60.7	1157	1171	66.2	1377	1519
55.3	9607	8855	60.8	1161	1177	66.3	1381	1526
55.4	9642	8903	60.9	1165	1183	66.4	1385	1533
55.5	9677	8951	61.0	1169	1188	66.5	1389	1540
55.6	9712	9000	61.1	1173	1194	66.6	1393	1547
55.7	9747	9048	61.2	1177	1200	66.7	1398	1554
55.8	9782	9097	61.3	1180	1206	66.8	1402	1561
55.9	9817	9149	61.4	1184	1212	66.9	1406	1568

Table 13. Spheres, areas and volumes—*Continued*

Diam.	Area $\times 10^{-1}$	Vol. $\times 10^{-2}$	Diam.	Area $\times 10^{-1}$	Vol. $\times 10^{-2}$	Diam.	Area $\times 10^{-1}$	Vol. $\times 10^{-2}$
67.0	**1410**	**1575**	72.5	1651	1995	**78.0**	**1911**	**2485**
67.1	1414	1582	72.6	1656	2004	78.1	1916	2494
67.2	1419	1589	72.7	1660	2012	78.2	1921	2504
67.3	1423	1596	72.8	1665	2020	78.3	1926	2514
67.4	1427	1603	72.9	1670	2029	78.4	1931	2523
67.5	1431	1610	**73.0**	**1674**	**2037**	78.5	1936	2533
67.6	1436	1617	73.1	1679	2045	78.6	1941	2543
67.7	1440	1625	73.2	1683	2054	78.7	1946	2552
67.8	1444	1632	73.3	1688	2062	78.8	1951	2562
67.9	1448	1639	73.4	1692	2071	78.9	1956	2572
68.0	**1453**	**1646**	73.5	1697	2079	**79.0**	**1961**	**2582**
68.1	1457	1654	73.6	1702	2088	79.1	1966	2591
68.2	1461	1661	73.7	1706	2096	79.2	1971	2601
68.3	1466	1668	73.8	1711	2105	79.3	1976	2611
68.4	1470	1676	73.9	1716	2113	79.4	1981	2621
68.5	1474	1683	**74.0**	**1720**	**2122**	79.5	1986	2631
68.6	1478	1690	74.1	1725	2130	79.6	1991	2641
68.7	1482	1698	74.2	1730	2139	79.7	1996	2651
68.8	1487	1705	74.3	1734	2148	79.8	2000	2661
68.9	1491	1713	74.4	1739	2156	79.9	2005	2671
69.0	**1496**	**1720**	74.5	1744	2165	**80.0**	**2010**	**2681**
69.1	1500	1728	74.6	1748	2174	80.1	2016	2691
69.2	1504	1735	74.7	1753	2183	80.2	2021	2701
69.3	1509	1743	74.8	1758	2191	80.3	2026	2711
69.4	1513	1750	74.9	1762	2200	80.4	2031	2721
69.5	1518	1758	**75.0**	**1767**	**2209**	80.5	2036	2731
69.6	1522	1765	75.1	1772	2218	80.6	2041	2742
69.7	1526	1773	75.2	1776	2227	80.7	2046	2752
69.8	1530	1781	75.3	1781	2236	80.8	2051	2762
69.9	1535	1788	75.4	1786	2244	80.9	2056	2772
70.0	**1539**	**1796**	75.5	1791	2253	**81.0**	**2061**	**2783**
70.1	1544	1804	75.6	1796	2262	81.1	2066	2793
70.2	1548	1811	75.7	1800	2271	81.2	2071	2803
70.3	1552	1819	75.8	1805	2280	81.3	2076	2814
70.4	1557	1827	75.9	1810	2289	81.4	2081	2824
70.5	1562	1835	**76.0**	**1814**	**2298**	81.5	2087	2834
70.6	1566	1843	76.1	1819	2308	81.6	2092	2845
70.7	1570	1850	76.2	1824	2317	81.7	2097	2855
70.8	1575	1858	76.3	1829	2326	81.8	2102	2866
70.9	1579	1866	76.4	1834	2335	81.9	2107	2876
71.0	**1584**	**1874**	76.5	1838	2344	**82.0**	**2112**	**2887**
71.1	1588	1882	76.6	1843	2353	82.1	2118	2898
71.2	1593	1890	76.7	1848	2363	82.2	2123	2908
71.3	1597	1898	76.8	1853	2372	82.3	2128	2919
71.4	1602	1906	76.9	1858	2381	82.4	2133	2929
71.5	1606	1914	**77.0**	**1863**	**2390**	82.5	2138	2940
71.6	1610	1922	77.1	1868	2400	82.6	2143	2951
71.7	1615	1930	77.2	1872	2409	82.7	2149	2962
71.8	1620	1938	77.3	1877	2418	82.8	2154	2972
71.9	1624	1946	77.4	1882	2428	82.9	2159	2983
72.0	**1629**	**1954**	77.5	1887	2437	**83.0**	**2164**	**2994**
72.1	1633	1962	77.6	1892	2447	83.1	2169	3005
72.2	1638	1971	77.7	1897	2456	83.2	2175	3016
72.3	1642	1979	77.8	1902	2466	83.3	2180	3026
72.4	1647	1987	77.9	1906	2475	83.4	2185	3037

Table 13. Spheres, areas and volumes—*Continued*

Diam.	Area $\times 10^{-1}$	Vol. $\times 10^{-2}$	Diam.	Area $\times 10^{-1}$	Vol. $\times 10^{-2}$	Diam.	Area $\times 10^{-1}$	Vol. $\times 10^{-2}$
83.5	2190	3048	89.0	2488	3691	94.5	2806	4419
83.6	2196	3059	89.1	2494	3704	94.6	2812	4433
83.7	2201	3070	89.2	2500	3716	94.7	2818	4447
83.8	2206	3081	89.3	2505	3729	94.8	2823	4461
83.9	2211	3092	89.4	2511	3741	94.9	2829	4475
84.0	2217	3103	89.5	2516	3754	95.0	2835	4489
84.1	2222	3114	89.6	2522	3766	95.1	2841	4503
84.2	2227	3126	89.7	2528	3779	95.2	2847	4518
84.3	2232	3137	89.8	2533	3792	95.3	2853	4532
84.4	2238	3148	89.9	2539	3804	95.4	2859	4546
84.5	2243	3159	90.0	2545	3817	95.5	2865	4560
84.6	2248	3170	90.1	2550	3830	95.6	2871	4575
84.7	2254	3182	90.2	2556	3843	95.7	2877	4589
84.8	2259	3193	90.3	2561	3855	95.8	2883	4604
84.9	2264	3204	90.4	2567	3868	95.9	2889	4618
85.0	2270	3216	90.5	2573	3881	96.0	2895	4632
85.1	2275	3227	90.6	2579	3894	96.1	2901	4647
85.2	2280	3238	90.7	2584	3907	96.2	2907	4661
85.3	2286	3250	90.8	2590	3920	96.3	2913	4676
85.4	2291	3261	90.9	2596	3933	96.4	2920	4691
85.5	2296	3273	91.0	2602	3946	96.5	2926	4705
85.6	2302	3284	91.1	2607	3959	96.6	2932	4720
85.7	2307	3296	91.2	2613	3972	96.7	2938	4735
85.8	2313	3307	91.3	2619	3985	96.8	2944	4749
85.9	2318	3319	91.4	2624	3998	96.9	2950	4764
86.0	2324	3330	91.5	2630	4011	97.0	2956	4779
86.1	2329	3342	91.6	2636	4024	97.1	2962	4794
86.2	2334	3354	91.7	2641	4037	97.2	2968	4808
86.3	2340	3365	91.8	2647	4051	97.3	2974	4823
86.4	2345	3377	91.9	2653	4064	97.4	2980	4838
86.5	2350	3389	92.0	2659	4077	97.5	2987	4853
86.6	2356	3401	92.1	2665	4091	97.6	2992	4868
86.7	2362	3412	92.2	2670	4104	97.7	2999	4883
86.8	2367	3424	92.3	2676	4117	97.8	3005	4898
86.9	2372	3436	92.4	2682	4131	97.9	3011	4913
87.0	2378	3448	92.5	2688	4144	98.0	3017	4928
87.1	2383	3460	92.6	2694	4157	98.1	3023	4943
87.2	2389	3472	92.7	2700	4171	98.2	3029	4958
87.3	2394	3484	92.8	2706	4184	98.3	3036	4973
87.4	2400	3496	92.9	2711	4198	98.4	3042	4989
87.5	2405	3508	93.0	2717	4212	98.5	3048	5004
87.6	2411	3520	93.1	2723	4225	98.6	3054	5019
87.7	2416	3532	93.2	2729	4239	98.7	3060	5034
87.8	2422	3544	93.3	2735	4252	98.8	3067	5050
87.9	2427	3556	93.4	2740	4266	98.9	3073	5065
88.0	2433	3568	93.5	2746	4280	99.0	3079	5080
88.1	2438	3580	93.6	2752	4294	99.1	3085	5096
88.2	2444	3593	93.7	2758	4307	99.2	3091	5111
88.3	2449	3605	93.8	2764	4321	99.3	3098	5127
88.4	2455	3617	93.9	2770	4335	99.4	3104	5142
88.5	2460	3629	94.0	2776	4349	99.5	3110	5158
88.6	2466	3642	94.1	2782	4363	99.6	3116	5173
88.7	2472	3654	94.2	2788	4377	99.7	3123	5189
88.8	2477	3666	94.3	2794	4391	99.8	3129	5205
88.9	2483	3679	94.4	2800	4405	99.9	3135	5220
						100.	3142	5236

Table 14. Degrees to radians

Deg.	Rad.	Deg.	Rad.	Deg.	Rad.	Deg.	Rad.	Deg.	Rad.	Deg.	Rad.
1	.0175	31	.5411	61	1.0647	91	1.5882	121	2.1118	151	2.6354
2	.0349	32	.5585	62	1.0821	92	1.6057	122	2.1293	152	2.6529
3	.0524	33	.5760	63	1.0996	93	1.6232	123	2.1468	153	2.6704
4	.0698	34	.5934	64	1.1170	94	1.6406	124	2.1642	154	2.6878
5	.0873	35	.6109	65	1.1345	95	1.6581	125	2.1817	155	2.7053
6	.1047	36	.6283	66	1.1519	96	1.6755	126	2.1991	156	2.7227
7	.1222	37	.6458	67	1.1694	97	1.6930	127	2.2166	157	2.7402
8	.1396	38	.6632	68	1.1868	98	1.7104	128	2.2340	158	2.7576
9	.1571	39	.6807	69	1.2043	99	1.7279	129	2.2515	159	2.7751
10	.1745	40	.6981	70	1.2217	100	1.7453	130	2.2689	160	2.7925
11	.1920	41	.7156	71	1.2392	101	1.7628	131	2.2864	161	2.8100
12	.2094	42	.7330	72	1.2566	102	1.7802	132	2.3038	162	2.8274
13	.2269	43	.7505	73	1.2741	103	1.7977	133	2.3213	163	2.8449
14	.2443	44	.7679	74	1.2915	104	1.8151	134	2.3387	164	2.8623
15	.2618	45	.7854	75	1.3090	105	1.8326	135	2.3562	165	2.8798
16	.2793	46	.8029	76	1.3265	106	1.8500	136	2.3736	166	2.8972
17	.2967	47	.8203	77	1.3439	107	1.8675	137	2.3911	167	2.9147
18	.3142	48	.8378	78	1.3614	108	1.8850	138	2.4086	168	2.9322
19	.3316	49	.8552	79	1.3788	109	1.9024	139	2.4260	169	2.9496
20	.3491	50	.8727	80	1.3963	110	1.9199	140	2.4435	170	2.9671
21	.3665	51	.8901	81	1.4137	111	1.9373	141	2.4609	171	2.9845
22	.3840	52	.9076	82	1.4312	112	1.9548	142	2.4784	172	3.0020
23	.4014	53	.9250	83	1.4486	113	1.9722	143	2.4958	173	3.0194
24	.4189	54	.9425	84	1.4661	114	1.9897	144	2.5133	174	3.0369
25	.4363	55	.9599	85	1.4835	115	2.0071	145	2.5307	175	3.0543
26	.4538	56	.9774	86	1.5010	116	2.0246	146	2.5482	176	3.0718
27	.4712	57	.9948	87	1.5184	117	2.0420	147	2.5656	177	3.0892
28	.4887	58	1.0123	88	1.5359	118	2.0595	148	2.5831	178	3.1067
29	.5061	59	1.0297	89	1.5533	110	2.0769	149	2.6005	179	3.1241
30	.5236	60	1.0472	90	1.5708	120	2.0944	150	2.6180	180	3.1416

Table 15. Minutes to radians

Min.	Rad.	Min.	Rad.	Min.	Rad.	Min.	Rad.	Min.	Rad.	Min.	Rad.
1	.0003	11	.0032	21	.0061	31	.0090	41	.0119	51	.0148
2	.0006	12	.0035	22	.0064	32	.0093	42	.0122	52	.0151
3	.0009	13	.0038	23	.0067	33	.0096	43	.0125	53	.0154
4	.0012	14	.0041	24	.0070	34	.0099	44	.0128	54	.0157
5	.0015	15	.0044	25	.0073	35	.0102	45	.0131	55	.0160
6	.0017	16	.0047	26	.0076	36	.0105	46	.0134	56	.0163
7	.0020	17	.0049	27	.0079	37	.0108	47	.0137	57	.0166
8	.0023	18	.0052	28	.0081	38	.0111	48	.0140	58	.0169
9	.0026	19	.0055	29	.0084	39	.0113	49	.0143	59	.0172
10	.0029	20	.0058	30	.0087	40	.0116	50	.0145	60	.0175

Table 16. Decimal parts of a degree to minutes

D.	M.	D.	M.	D.	M.	D.	M.	D.	M.	D.	M.	D.	M.	D.	M.	D.	M.	D.	M.
.01	0.6	.11	6.6	.21	12.6	.31	18.6	.41	24.6	.51	30.6	.61	36.6	.71	42.6	.81	48.6	.91	54.6
.02	1.2	.12	7.2	.22	13.2	.32	19.2	.42	25.2	.52	31.2	.62	37.2	.72	43.2	.82	49.2	.92	55.2
.03	1.8	.13	7.8	.23	13.8	.33	19.8	.43	25.8	.53	31.8	.63	37.8	.73	43.8	.83	49.8	.93	55.8
.04	2.4	.14	8.4	.24	14.4	.34	20.4	.44	26.4	.54	32.4	.64	38.4	.74	44.4	.84	50.4	.94	56.4
.05	3.0	.15	9.0	.25	15.0	.35	21.0	.45	27.0	.55	33.0	.65	39.0	.75	45.0	.85	51.0	.95	57.0
.06	3.6	.16	9.6	.26	15.6	.36	21.6	.46	27.6	.56	33.6	.66	39.6	.76	45.6	.86	51.6	.96	57.6
.07	4.2	.17	10.2	.27	16.2	.37	22.2	.47	28.2	.57	34.2	.67	40.2	.77	46.2	.87	52.2	.97	58.2
.08	4.8	.18	10.8	.28	16.8	.38	22.8	.48	28.8	.58	34.8	.68	40.8	.78	46.8	.88	52.8	.98	58.8
.09	5.4	.19	11.4	.29	17.4	.39	23.4	.49	29.4	.59	35.4	.69	41.4	.79	47.4	.89	53.4	.99	59.4
.10	6.0	.20	12.0	.30	18.0	.40	24.0	.50	30.0	.60	36.0	.70	42.0	.80	48.0	.90	54.0	1.00	60.0

Table 17. Radians to degrees and minutes

Radians	Deg. and min.	Radians	Deg. and min.	Radians	Deg. and min.	Radians	Deg. and min.	Radians	Deg. and min.	Radians	Deg. and min.
	° ′		° ′		° ′		° ′		° ′		° ′
0.001	0 3	0.47	26 56	1.02	58 27	1.57	89 57	2.12	121 28	2.67	152 59
.002	0 7	.48	27 30	.03	59 1	.58	90 32	.13	122 2	.68	153 33
.003	0 10	.49	28 4	.04	59 35	.59	91 6	.14	122 37	.69	154 8
.004	0 14	0.50	28 39	1.05	60 10	1.60	91 40	2.15	123 11	2.70	154 42
0.005	0 17	.51	29 13	.06	60 44	.61	92 15	.16	123 46	.71	155 16
.006	0 21	.52	29 48	.07	61 18	.62	92 49	.17	124 20	.72	155 51
.007	0 24	.53	30 22	.08	61 53	.63	93 24	.18	124 54	.73	156 25
.008	0 28	.54	30 56	.09	62 27	.64	93 58	.19	125 29	.74	156 59
.009	0 31	0.55	31 31	1.10	63 2	1.65	94 32	2.20	126 3	2.75	157 34
0.01	0 34	.56	32 5	.11	63 36	.66	95 6	.21	126 37	.76	158 8
.02	1 9	.57	32 40	.12	64 10	.67	95 41	.22	127 12	.77	158 43
.03	1 43	.58	33 14	.13	64 45	.68	96 15	.23	127 46	.78	159 17
.04	2 18	.59	33 48	.14	65 19	.69	96 50	.24	128 21	.79	159 51
0.05	2 52	0.60	34 23	1.15	65 53	1.70	97 24	2.25	128 55	2.80	160 26
.06	3 26	.61	34 57	.16	66 28	.71	97 59	.26	129 29	.81	161 0
.07	4 1	.62	35 31	.17	67 2	.72	98 33	.27	130 4	.82	161 34
.08	4 35	.63	36 6	.18	67 37	.73	99 7	.28	130 38	.83	162 9
.09	5 9	.64	36 40	.19	68 11	.74	99 42	.29	131 12	.84	162 43
0.10	5 44	0.65	37 15	1.20	68 45	1.75	100 16	2.30	131 47	2.85	163 18
.11	6 18	.66	37 49	.21	69 20	.76	100 50	.31	132 21	.86	163 52
.12	6 53	.67	38 23	.22	69 54	.77	101 25	.32	132 56	.87	164 26
.13	7 27	.68	38 58	.23	70 28	.78	101 59	.33	133 30	.88	165 1
.14	8 1	.69	39 32	.24	71 3	.79	102 34	.34	134 4	.89	165 35
0.15	8 36	0.70	40 6	1.25	71 37	1.80	103 8	2.35	134 39	2.90	166 9
.16	9 10	.71	40 41	.26	72 12	.81	103 42	.36	135 13	.91	166 44
.17	9 44	.72	41 15	.27	72 46	.82	104 17	.37	135 47	.92	167 18
.18	10 19	.73	41 50	.28	73 20	.83	104 51	.38	136 22	.93	167 53
.19	10 53	.74	42 24	.29	73 55	.84	105 25	.39	136 56	.94	168 27
0.20	11 28	0.75	42 58	1.30	74 29	1.85	106 0	2.40	137 31	2.95	169 1
.21	12 2	.76	43 33	.31	75 3	.86	106 34	.41	138 5	.96	169 36
.22	12 36	.77	44 7	.32	75 38	.87	107 9	.42	138 39	.97	170 10
.23	13 11	.78	44 41	.33	76 12	.88	107 43	.43	139 14	.98	170 44
.24	13 45	.79	45 16	.34	76 47	.89	108 17	.44	139 48	.99	171 19
0.25	14 19	0.80	45 50	1.35	77 21	1.90	108 52	2.45	140 22	3.00	171 53
.26	14 54	.81	46 25	.36	77 55	.91	109 26	.46	140 57	.01	172 28
.27	15 28	.82	46 59	.37	78 30	.92	110 0	.47	141 31	.02	173 2
.28	16 3	.83	47 33	.38	79 4	.93	110 35	.48	142 6	.03	173 36
.29	16 37	.84	48 8	.39	79 38	.94	111 9	.49	142 40	.04	174 11
0.30	17 11	0.85	48 42	1.40	80 13	1.95	111 44	2.50	143 14	3.05	174 45
.31	17 46	.86	49 16	.41	80 47	.96	112 18	.51	143 49	.06	175 20
.32	18 20	.87	49 51	.42	81 22	.97	112 52	.52	144 23	.07	175 54
.33	18 54	.88	50 25	.43	81 56	.98	113 27	.53	144 57	.08	176 28
.34	19 29	.89	51 0	.44	82 30	.99	114 1	.54	145 32	.09	177 3
0.35	20 33	0.90	51 34	1.45	83 5	2.00	114 35	2.55	146 6	3.10	177 37
.36	20 38	.91	52 8	.46	83 39	.01	115 10	.56	146 41	.11	178 11
.37	21 12	.92	52 43	.47	84 13	.02	115 44	.57	147 15	.12	178 46
.38	21 46	.93	53 17	.48	84 48	.03	116 19	.58	147 49	.13	179 20
.39	22 21	.94	53 51	.49	85 22	.04	116 53	.59	148 24	.14	179 55
0.40	22 55	0.95	54 26	1.50	85 57	2.05	117 27	2.60	148 58	3.15	180 29
.41	23 29	.96	55 0	.51	86 31	.06	118 2	.61	149 32	3.1416	180 π
.42	24 4	.97	55 35	.52	87 5	.07	118 36	.62	150 7	6.2832	360 2π
.43	24 38	.98	56 9	.53	87 40	.08	119 11	.63	150 41	9.4248	540 3π
.44	25 13	.99	56 43	.54	88 14	.09	119 45	.64	151 16	12.5664	720 4π
0.45	25 47	1.00	57 18	1.55	88 49	2.10	120 19	2.65	151 50	15.7080	900 5π
.46	26 21	.01	57 52	.56	89 23	.11	120 54	.66	152 24	18.8496	1080 6π

Table 18. Natural sines and cosines

Angle, degrees	Sine								Prop. parts				
	0′	10′	20′	30′	40′	50′	60′		1′	2′	3′	4′	5′
0	**0.0000**	**0.0029**	**0.0058**	**0.0087**	**0.0116**	**0.0145**	**0.0175**	**89**	**3**	**6**	**9**	**12**	**15**
1	0.0175	0.0204	0.0233	0.0262	0.0291	0.0320	0.0349	88	3	6	9	12	15
2	0.0349	0.0378	0.0407	0.0436	0.0465	0.0494	0.0523	87	3	6	9	12	15
3	0.0523	0.0552	0.0581	0.0610	0.0640	0.0669	0.0698	86	3	6	9	12	15
4	0.0698	0.0727	0.0756	0.0785	0.0814	0.0843	0.0872	85	3	6	9	12	14
5	0.0872	0.0901	0.0929	0.0958	0.0987	0.1016	0.1045	84	3	6	9	12	14
6	0.1045	0.1074	0.1103	0.1132	0.1161	0.1190	0.1219	83	3	6	9	12	14
7	0.1219	0.1248	0.1276	0.1305	0.1334	0.1363	0.1392	82	3	6	9	12	14
8	0.1392	0.1421	0.1449	0.1478	0.1507	0.1536	0.1564	81	3	6	9	12	14
9	0.1564	0.1593	0.1622	0.1650	0.1679	0.1708	0.1736	80	3	6	9	11	14
10	**0.1736**	**0.1765**	**0.1794**	**0.1822**	**0.1851**	**0.1880**	**0.1908**	**79**	**3**	**6**	**9**	**11**	**14**
11	0.1908	0.1937	0.1965	0.1994	0.2022	0.2051	0.2079	78	3	6	9	11	14
12	0.2079	0.2108	0.2136	0.2164	0.2193	0.2221	0.2250	77	3	6	9	11	14
13	0.2250	0.2278	0.2306	0.2334	0.2363	0.2391	0.2419	76	3	6	8	11	14
14	0.2419	0.2447	0.2476	0.2504	0.2532	0.2560	0.2588	75	3	6	8	11	14
15	0.2588	0.2616	0.2644	0.2672	0.2700	0.2728	0.2756	74	3	6	8	11	14
16	0.2756	0.2784	0.2812	0.2840	0.2868	0.2896	0.2924	73	3	6	8	11	14
17	0.2924	0.2952	0.2979	0.3007	0.3035	0.3062	0.3090	72	3	6	8	11	14
18	0.3090	0.3118	0.3145	0.3173	0.3201	0.3228	0.3256	71	3	6	8	11	14
19	0.3256	0.3283	0.3311	0.3338	0.3365	0.3393	0.3420	70	3	5	8	11	14
20	**0.3420**	**0.3448**	**0.3475**	**0.3502**	**0.3529**	**0.3557**	**0.3584**	**69**	**3**	**5**	**8**	**11**	**14**
21	0.3584	0.3611	0.3638	0.3665	0.3692	0.3719	0.3746	68	3	5	8	11	14
22	0.3746	0.3773	0.3800	0.3827	0.3854	0.3881	0.3907	67	3	5	8	11	13
23	0.3907	0.3934	0.3961	0.3987	0.4014	0.4041	0.4067	66	3	5	8	11	13
24	0.4067	0.4094	0.4120	0.4147	0.4173	0.4200	0.4226	65	3	5	8	11	13
25	0.4226	0.4253	0.4279	0.4305	0.4331	0.4358	0.4384	64	3	5	8	11	13
26	0.4384	0.4410	0.4436	0.4462	0.4488	0.4514	0.4540	63	3	5	8	10	13
27	0.4540	0.4566	0.4592	0.4617	0.4643	0.4669	0.4695	62	3	5	8	10	13
28	0.4695	0.4720	0.4746	0.4772	0.4797	0.4823	0.4848	61	3	5	8	10	13
29	0.4848	0.4874	0.4899	0.4924	0.4950	0.4975	0.5000	60	3	5	8	10	13
30	**0.5000**	**0.5025**	**0.5050**	**0.5075**	**0.5100**	**0.5125**	**0.5150**	**59**	**3**	**5**	**8**	**10**	**13**
31	0.5150	0.5175	0.5200	0.5225	0.5250	0.5275	0.5299	58	2	5	7	10	12
32	0.5299	0.5324	0.5348	0.5373	0.5398	0.5422	0.5446	57	2	5	7	10	12
33	0.5446	0.5471	0.5495	0.5519	0.5544	0.5568	0.5592	56	2	5	7	10	12
34	0.5592	0.5616	0.5640	0.5664	0.5688	0.5712	0.5736	55	2	5	7	10	12
35	0.5736	0.5760	0.5783	0.5807	0.5831	0.5854	0.5878	54	2	5	7	9	12
36	0.5878	0.5901	0.5925	0.5948	0.5972	0.5995	0.6018	53	2	5	7	9	12
37	0.6018	0.6041	0.6065	0.6088	0.6111	0.6134	0.6157	52	2	5	7	9	12
38	0.6157	0.6180	0.6202	0.6225	0.6248	0.6271	0.6293	51	2	5	7	9	11
39	0.6293	0.6316	0.6338	0.6361	0.6383	0.6406	0.6428	50	2	4	7	9	11
40	**0.6428**	**0.6450**	**0.6472**	**0.6494**	**0.6517**	**0.6539**	**0.6561**	**49**	**2**	**4**	**7**	**9**	**11**
41	0.6561	0.6583	0.6604	0.6626	0.6648	0.6670	0.6691	48	2	4	7	9	11
42	0.6691	0.6713	0.6734	0.6756	0.6777	0.6799	0.6820	47	2	4	6	9	11
43	0.6820	0.6841	0.6862	0.6884	0.6905	0.6926	0.6947	46	2	4	6	8	11
44	0.6947	0.6967	0.6988	0.7009	0.7030	0.7050	0.7071	45	2	4	6	8	10
	60′	50′	40′	30′	20′	10′	0′	Angle, degrees	1′	2′	3′	4′	5′
	Cosine. Read up. Subtract corrections												

Table 18. Natural sines and cosines—*Continued*

Angle, degrees	Sine								Prop. parts				
	0′	10′	20′	30′	40′	50′	60′		1′	2′	3′	4′	5′
45	0.7071	0.7092	0.7112	0.7133	0.7153	0.7173	0.7193	44	2	4	6	8	10
46	0.7193	0.7214	0.7234	0.7254	0.7274	0.7294	0.7314	43	2	4	6	8	10
47	0.7314	0.7333	0.7353	0.7373	0.7392	0.7412	0.7431	42	2	4	6	8	10
48	0.7431	0.7451	0.7470	0.7490	0.7509	0.7528	0.7547	41	2	4	6	8	10
49	0.7547	0.7566	0.7585	0.7604	0.7623	0.7642	0.7660	40	2	4	6	8	9
50	**0.7660**	**0.7679**	**0.7698**	**0.7716**	**0.7735**	**0.7753**	**0.7771**	**39**	**2**	**4**	**6**	**7**	**9**
51	0.7771	0.7790	0.7808	0.7826	0.7844	0.7862	0.7880	38	2	4	5	7	9
52	0.7880	0.7898	0.7916	0.7934	0.7951	0.7969	0.7986	37	2	4	5	7	9
53	0.7986	0.8004	0.8021	0.8039	0.8056	0.8073	0.8090	36	2	3	5	7	9
54	0.8090	0.8107	0.8124	0.8141	0.8158	0.8175	0.8192	35	2	3	5	7	8
55	0.8192	0.8208	0.8225	0.8241	0.8258	0.8274	0.8290	34	2	3	5	7	8
56	0.8290	0.8307	0.8323	0.8339	0.8355	0.8371	0.8387	33	2	3	5	6	8
57	0.8387	0.8403	0.8418	0.8434	0.8450	0.8465	0.8480	32	2	3	5	6	8
58	0.8480	0.8496	0.8511	0.8526	0.8542	0.8557	0.8572	31	2	3	5	6	8
59	0.8572	0.8587	0.8601	0.8616	0.8631	0.8646	0.8660	30	1	3	4	6	7
60	**0.8660**	**0.8675**	**0.8689**	**0.8704**	**0.8718**	**0.8732**	**0.8746**	**29**	**1**	**3**	**4**	**6**	**7**
61	0.8746	0.8760	0.8774	0.8788	0.8802	0.8816	0.8829	28	1	3	4	6	7
62	0.8829	0.8843	0.8857	0.8870	0.8884	0.8897	0.8910	27	1	3	4	5	7
63	0.8910	0.8923	0.8936	0.8949	0.8962	0.8975	0.8988	26	1	3	4	5	6
64	0.8988	0.9001	0.9013	0.9026	0.9038	0.9051	0.9063	25	1	3	4	5	6
65	0.9063	0.9075	0.9088	0.9100	0.9112	0.9124	0.9135	24	1	2	4	5	6
66	0.9135	0.9147	0.9159	0.9171	0.9182	0.9194	0.9205	23	1	2	3	5	6
67	0.9205	0.9216	0.9228	0.9239	0.9250	0.9261	0.9272	22	1	2	3	4	6
68	0.9272	0.9283	0.9293	0.9304	0.9315	0.9325	0.9336	21	1	2	3	4	5
69	0.9336	0.9346	0.9356	0.9367	0.9377	0.9387	0.9397	20	1	2	3	4	5
70	**0.9397**	**0.9407**	**0.9417**	**0.9426**	**0.9436**	**0.9446**	**0.9455**	**19**	**1**	**2**	**3**	**4**	**5**
71	0.9455	0.9465	0.9474	0.9483	0.9492	0.9502	0.9511	18	1	2	3	4	5
72	0.9511	0.9520	0.9528	0.9537	0.9546	0.9555	0.9563	17	1	2	3	3	4
73	0.9563	0.9572	0.9580	0.9588	0.9596	0.9605	0.9613	16	1	2	2	3	4
74	0.9613	0.9621	0.9628	0.9636	0.9644	0.9652	0.9659	15	1	2	2	3	4
75	0.9659	0.9667	0.9674	0.9681	0.9689	0.9696	0.9703	14	1	1	2	3	4
76	0.9703	0.9710	0.9717	0.9724	0.9730	0.9737	0.9744	13	1	1	2	3	3
77	0.9744	0.9750	0.9757	0.9763	0.9769	0.9775	0.9781	12	1	1	2	3	3
78	0.9781	0.9787	0.9793	0.9799	0.9805	0.9811	0.9816	11	1	1	2	2	3
79	0.9816	0.9822	0.9827	0.9833	0.9838	0.9843	0.9848	10	1	1	2	2	3
80	**0.9848**	**0.9853**	**0.9858**	**0.9863**	**0.9868**	**0.9872**	**0.9877**	**9**	**0**	**1**	**1**	**2**	**2**
81	0.9877	0.9881	0.9886	0.9890	0.9894	0.9899	0.9903	8	0	1	1	2	2
82	0.9903	0.9907	0.9911	0.9914	0.9918	0.9922	0.9925	7	0	1	1	2	2
83	0.9925	0.9929	0.9932	0.9936	0.9939	0.9942	0.9945	6	0	1	1	1	2
84	0.9945	0.9948	0.9951	0.9954	0.9957	0.9959	0.9962	5	0	1	1	1	1
85	0.9962	0.9964	0.9967	0.9969	0.9971	0.9974	0.9976	4	0	0	1	1	1
86	0.9976	0.9978	0.9980	0.9981	0.9983	0.9985	0.9986	3	0	0	1	1	1
87	0.9986	0.9988	0.9989	0.9990	0.9992	0.9993	0.9994	2	0	0	0	1	1
88	0.9994	0.9995	0.9996	0.9997	0.9997	0.9998	0.9998	1	0	0	0	0	0
89	0.9998	0.9999	0.9999	1.0000	1.0000	1.0000	1.0000	0	0	0	0	0	0
	60′	50′	40′	30′	20′	10′	0′	Angle, degrees	1′	2′	3′	4′	5′
	Cosine. Read up. Subtract corrections												

Table 19. Natural tangents and cotangents

Angle, degrees	Tangent								Prop. parts				
	0′	10′	20′	30′	40′	50′	60′		1′	2′	3′	4′	5′
0	**0.0000**	**0.0029**	**0.0058**	**0.0087**	**0.0116**	**0.0145**	**0.0175**	**89**	**3**	**6**	**9**	**12**	**15**
1	0.0175	0.0204	0.0233	0.0262	0.0291	0.0320	0.0349	88	3	6	9	12	15
2	0.0349	0.0378	0.0407	0.0437	0.0466	0.0495	0.0524	87	3	6	9	12	15
3	0.0524	0.0553	0.0582	0.0612	0.0641	0.0670	0.0699	86	3	6	9	12	15
4	0.0699	0.0729	0.0758	0.0787	0.0816	0.0846	0.0875	85	3	6	9	12	15
5	0.0875	0.0904	0.0934	0.0963	0.0992	0.1022	0.1051	84	3	6	9	12	15
6	0.1051	0.1080	0.1110	0.1139	0.1169	0.1198	0.1228	83	3	6	9	12	15
7	0.1228	0.1257	0.1287	0.1317	0.1346	0.1376	0.1405	82	3	6	9	12	15
8	0.1405	0.1435	0.1465	0.1495	0.1524	0.1554	0.1584	81	3	6	9	12	15
9	0.1584	0.1614	0.1644	0.1673	0.1703	0.1733	0.1763	80	3	6	9	12	15
10	**0.1763**	**0.1793**	**0.1823**	**0.1853**	**0.1883**	**0.1914**	**0.1944**	**79**	**3**	**6**	**9**	**12**	**15**
11	0.1944	0.1974	0.2004	0.2035	0.2065	0.2095	0.2126	78	3	6	9	12	15
12	0.2126	0.2156	0.2186	0.2217	0.2247	0.2278	0.2309	77	3	6	9	12	15
13	0.2309	0.2339	0.2370	0.2401	0.2432	0.2462	0.2493	76	3	6	9	12	15
14	0.2493	0.2524	0.2555	0.2586	0.2617	0.2648	0.2679	75	3	6	9	12	16
15	0.2679	0.2711	0.2742	0.2773	0.2805	0.2836	0.2867	74	3	6	9	13	16
16	0.2867	0.2899	0.2931	0.2962	0.2994	0.3026	0.3057	73	3	6	9	13	16
17	0.3057	0.3089	0.3121	0.3153	0.3185	0.3217	0.3249	72	3	6	10	13	16
18	0.3249	0.3281	0.3314	0.3346	0.3378	0.3411	0.3443	71	3	6	10	13	16
19	0.3443	0.3476	0.3508	0.3541	0.3574	0.3607	0.3640	70	3	7	10	13	16
20	**0.3640**	**0.3673**	**0.3706**	**0.3739**	**0.3772**	**0.3805**	**0.3839**	**69**	**3**	**7**	**10**	**13**	**17**
21	0.3839	0.3872	0.3906	0.3939	0.3973	0.4006	0.4040	68	3	7	10	13	17
22	0.4040	0.4074	0.4108	0.4142	0.4176	0.4210	0.4245	67	3	7	10	14	17
23	0.4245	0.4279	0.4314	0.4348	0.4383	0.4417	0.4452	66	3	7	10	14	17
24	0.4452	0.4487	0.4522	0.4557	0.4592	0.4628	0.4663	65	4	7	11	14	18
25	0.4663	0.4699	0.4734	0.4770	0.4806	0.4841	0.4877	64	4	7	11	14	18
26	0.4877	0.4913	0.4950	0.4986	0.5022	0.5059	0.5095	63	4	7	11	15	18
27	0.5095	0.5132	0.5169	0.5206	0.5243	0.5280	0.5317	62	4	7	11	15	18
28	0.5317	0.5354	0.5392	0.5430	0.5467	0.5505	0.5543	61	4	8	11	15	19
29	0.5543	0.5581	0.5619	0.5658	0.5696	0.5735	0.5774	60	4	8	12	15	19
30	**0.5774**	**0.5812**	**0.5851**	**0.5890**	**0.5930**	**0.5969**	**0.6009**	**59**	**4**	**8**	**12**	**16**	**19**
31	0.6009	0.6048	0.6088	0.6128	0.6168	0.6208	0.6249	58	4	8	12	16	20
32	0.6249	0.6289	0.6330	0.6371	0.6412	0.6453	0.6494	57	4	8	12	16	20
33	0.6494	0.6536	0.6577	0.6619	0.6661	0.6703	0.6745	56	4	8	13	17	21
34	0.6745	0.6787	0.6830	0.6873	0.6916	0.6959	0.7002	55	4	9	13	17	21
35	0.7002	0.7046	0.7089	0.7133	0.7177	0.7221	0.7265	54	4	9	13	18	22
36	0.7265	0.7310	0.7355	0.7400	0.7445	0.7490	0.7536	53	5	9	14	18	23
37	0.7536	0.7581	0.7627	0.7673	0.7720	0.7766	0.7813	52	5	9	14	18	23
38	0.7813	0.7860	0.7907	0.7954	0.8002	0.8050	0.8098	51	5	10	14	19	24
39	0.8098	0.8146	0.8195	0.8243	0.8292	0.8342	0.8391	50	5	10	15	20	24
40	**0.8391**	**0.8441**	**0.8491**	**0.8541**	**0.8591**	**0.8642**	**0.8693**	**49**	**5**	**10**	**15**	**20**	**25**
41	0.8693	0.8744	0.8796	0.8847	0.8899	0.8952	0.9004	48	5	10	16	21	26
42	0.9004	0.9057	0.9110	0.9163	0.9217	0.9271	0.9325	47	5	11	16	21	27
43	0.9325	0.9380	0.9435	0.9490	0.9545	0.9601	0.9657	46	6	11	17	22	28
44	0.9657	0.9713	0.9770	0.9827	0.9884	0.9942	1.0000	45	6	11	17	23	29
	60′	50′	40′	30′	20′	10′	0′	Angle, degrees	1′	2′	3′	4′	5′
	Cotangent. Read up. Subtract corrections								Prop. parts				

Table 19. Natural tangents and cotangents—*Continued*

Angle, degrees	Tangent 0′	10′	20′	30′	40′	50′	60′		Prop. parts 1′	2′	3′	4′	5′
45	1.000	1.006	1.012	1.018	1.024	1.030	1.036	44	1	1	2	2	3
46	1.036	1.042	1.048	1.054	1.060	1.066	1.072	43	1	1	2	2	3
47	1.072	1.079	1.085	1.091	1.098	1.104	1.111	42	1	1	2	3	3
48	1.111	1.117	1.124	1.130	1.137	1.144	1.150	41	1	1	2	3	3
49	1.150	1.157	1.164	1.171	1.178	1.185	1.192	40	1	1	2	3	3
50	**1.192**	**1.199**	**1.206**	**1.213**	**1.220**	**1.228**	**1.235**	**39**	**1**	**1**	**2**	**3**	**4**
51	1.235	1.242	1.250	1.257	1.265	1.272	1.280	38	1	1	2	3	4
52	1.280	1.288	1.295	1.303	1.311	1.319	1.327	37	1	2	2	3	4
53	1.327	1.335	1.343	1.351	1.360	1.368	1.376	36	1	2	2	3	4
54	1.376	1.385	1.393	1.402	1.411	1.419	1.428	35	1	2	3	3	4
55	1.428	1.437	1.446	1.455	1.464	1.473	1.483	34	1	2	3	4	5
56	1.483	1.492	1.501	1.511	1.520	1.530	1.540	33	1	2	3	4	5
57	1.540	1.550	1.560	1.570	1.580	1.590	1.600	32	1	2	3	4	5
58	1.600	1.611	1.621	1.632	1.643	1.653	1.664	31	1	2	3	4	5
59	1.664	1.675	1.686	1.698	1.709	1.720	1.732	30	1	2	3	5	6
60	**1.732**	**1.744**	**1.756**	**1.767**	**1.780**	**1.792**	**1.804**	**29**	**1**	**2**	**4**	**5**	**6**
61	1.804	1.816	1.829	1.842	1.855	1.868	1.881	28	1	3	4	5	6
62	1.881	1.894	1.907	1.921	1.935	1.949	1.963	27	1	3	4	5	7
63	1.963	1.977	1.991	2.006	2.020	2.035	2.050	26	1	3	4	6	7
64	2.050	2.066	2.081	2.097	2.112	2.128	2.145	25	2	3	5	6	8
65	2.145	2.161	2.177	2.194	2.211	2.229	2.246	24	2	3	5	7	8
66	2.246	2.264	2.282	2.300	2.318	2.337	2.356	23	2	4	5	7	9
67	2.356	2.375	2.394	2.414	2.434	2.455	2.475	22	2	4	6	8	10
68	2.475	2.496	2.517	2.539	2.560	2.583	2.605	21	2	4	6	9	11
69	2.605	2.628	2.651	2.675	2.699	2.723	2.747	20	2	5	7	10	12
70	**2.747**	**2.773**	**2.798**	**2.824**	**2.850**	**2.877**	**2.904**	**19**	**3**	**5**	**8**	**11**	**13**
71	2.904	2.932	2.960	2.989	3.018	3.047	3.078	18	3	6	9	12	14
72	3.078	3.108	3.140	3.172	3.204	3.237	3.271	17	3	6	10	13	16
73	3.271	3.305	3.340	3.376	3.412	3.450	3.487	16	4	7	11	14	18
74	3.487	3.526	3.566	3.606	3.647	3.689	3.732	15					
75	3.732	3.776	3.821	3.867	3.914	3.962	4.011	14					
76	4.011	4.061	4.113	4.165	4.219	4.275	4.331	13					
77	4.331	4.390	4.449	4.511	4.574	4.638	4.705	12					
78	4.705	4.773	4.843	4.915	4.989	5.066	5.145	11					
79	5.145	5.226	5.309	5.396	5.485	5.576	5.671	10					
80	**5.671**	**5.769**	**5.871**	**5.976**	**6.084**	**6.197**	**6.314**	**9**					
81	6.314	6.435	6.561	6.691	6.827	6.968	7.115	8					
82	7.115	7.269	7.429	7.596	7.770	7.953	8.144	7					
83	8.144	8.345	8.556	8.777	9.010	9.255	9.514	6					
84	9.514	9.788	10.08	10.39	10.71	11.06	11.43	5					
85	11.43	11.83	12.25	12.71	13.20	13.73	14.30	4					
86	14.30	14.92	15.60	16.35	17.17	18.07	19.08	3					
87	19.08	20.21	21.47	22.90	24.54	26.43	28.64	2					
88	28.64	31.24	34.37	38.19	42.96	49.10	57.29	1					
89	57.29	68.75	85.94	114.6	171.9	343.8	∞	0					
	60′	50′	40′	30′	20′	10′	0′	Angle, degrees	1′	2′	3′	4′	5′
	Cotangent. Read up. Subtract corrections								Prop. parts				

Interpolate.

Do not interpolate here.

Table 20. Mantissas of common logarithms, base 10

N	0	1	2	3	4	5	6	7	8	9
100	**.0000**	**.0004**	**.0009**	**.0013**	**.0017**	**.0022**	**.0026**	**.0030**	**.0035**	**.0039**
101	.0043	.0048	.0052	.0056	.0060	.0065	.0069	.0073	.0077	.0082
102	.0086	.0090	.0095	.0099	.0103	.0107	.0111	.0116	.0120	.0124
103	.0128	.0133	.0137	.0141	.0145	.0149	.0154	.0158	.0162	.0166
104	.0170	.0175	.0179	.0183	.0187	.0191	.0195	.0199	.0204	.0208
105	.0212	.0216	.0220	.0224	.0228	.0233	.0237	.0241	.0245	.0249
106	.0253	.0257	.0261	.0265	.0269	.0273	.0278	.0282	.0286	.0290
107	.0294	.0298	.0302	.0306	.0310	.0314	.0318	.0322	.0326	.0330
108	.0334	.0338	.0342	.0346	.0350	.0354	.0358	.0362	.0366	.0370
109	.0374	.0378	.0382	.0386	.0390	.0394	.0398	.0402	.0406	.0410
110	**.0414**	**.0418**	**.0422**	**.0426**	**.0430**	**.0434**	**.0438**	**.0441**	**.0445**	**.0449**
111	.0453	.0457	.0461	.0465	.0469	.0473	.0477	.0481	.0484	.0488
112	.0492	.0496	.0500	.0504	.0508	.0512	.0515	.0519	.0523	.0527
113	.0531	.0535	.0538	.0542	.0546	.0550	.0554	.0558	.0561	.0565
114	.0569	.0573	.0577	.0580	.0584	.0588	.0592	.0596	.0599	.0603
115	.0607	.0611	.0615	.0618	.0622	.0626	.0630	.0633	.0637	.0641
116	.0645	.0648	.0652	.0656	.0660	.0663	.0667	.0671	.0674	.0678
117	.0682	.0686	.0689	.0693	.0697	.0700	.0704	.0708	.0711	.0715
118	.0719	.0722	.0726	.0730	.0734	.0737	.0741	.0745	.0748	.0752
119	.0755	.0759	.0763	.0766	.0770	.0774	.0777	.0781	.0785	.0788
120	**.0792**	**.0795**	**.0799**	**.0803**	**.0806**	**.0810**	**.0813**	**.0817**	**.0821**	**.0824**
121	.0828	.0831	.0835	.0839	.0842	.0846	.0849	.0853	.0856	.0860
122	.0864	.0867	.0871	.0874	.0878	.0881	.0885	.0888	.0892	.0896
123	.0899	.0903	.0906	.0910	.0913	.0917	.0920	.0924	.0927	.0931
124	.0934	.0938	.0941	.0945	.0948	.0952	.0955	.0959	.0962	.0966
125	.0969	.0973	.0976	.0980	.0983	.0986	.0990	.0993	.0997	.1000
126	.1004	.1007	.1011	.1014	.1017	.1021	.1024	.1028	.1031	.1035
127	.1038	.1041	.1045	.1048	.1052	.1055	.1059	.1062	.1065	.1069
128	.1072	.1075	.1079	.1082	.1086	.1089	.1092	.1096	.1099	.1103
129	.1106	.1109	.1113	.1116	.1119	.1123	.1126	.1129	.1133	.1136
130	**.1139**	**.1143**	**.1146**	**.1149**	**.1153**	**.1156**	**.1159**	**.1163**	**.1166**	**.1169**
131	.1173	.1176	.1179	.1183	.1186	.1189	.1193	.1196	.1199	.1202
132	.1206	.1209	.1212	.1216	.1219	.1222	.1225	.1229	.1232	.1235
133	.1239	.1242	.1245	.1248	.1252	.1255	.1258	.1261	.1265	.1268
134	.1271	.1274	.1278	.1281	.1284	.1287	.1290	.1294	.1297	.1300
135	.1303	.1307	.1310	.1313	.1316	.1319	.1323	.1326	.1329	.1332
136	.1335	.1339	.1342	.1345	.1348	.1351	.1355	.1358	.1361	.1364
137	.1367	.1370	.1374	.1377	.1380	.1383	.1386	.1389	.1392	.1396
138	.1399	.1402	.1405	.1408	.1411	.1414	.1418	.1421	.1424	.1427
139	.1430	.1433	.1436	.1440	.1443	.1446	.1449	.1452	.1455	.1458
140	**.1461**	**.1464**	**.1467**	**.1471**	**.1474**	**.1477**	**.1480**	**.1483**	**.1486**	**.1489**
141	.1492	.1495	.1498	.1501	.1504	.1508	.1511	.1514	.1517	.1520
142	.1523	.1526	.1529	.1532	.1535	.1538	.1541	.1544	.1547	.1550
143	.1553	.1556	.1559	.1562	.1565	.1569	.1572	.1575	.1578	.1581
144	.1584	.1587	.1590	.1593	.1596	.1599	.1602	.1605	.1608	.1611
145	.1614	.1617	.1620	.1623	.1626	.1629	.1632	.1635	.1638	.1641
146	.1644	.1647	.1649	.1652	.1655	.1658	.1661	.1664	.1667	.1670
147	.1673	.1676	.1679	.1682	.1685	.1688	.1691	.1694	.1697	.1700
148	.1703	.1706	.1708	.1711	.1714	.1717	.1720	.1723	.1726	.1729
149	.1732	.1735	.1738	.1741	.1744	.1746	.1749	.1752	.1755	.1758
150	**.1761**	**.1764**	**.1767**	**.1770**	**.1772**	**.1775**	**.1778**	**.1781**	**.1784**	**.1787**
N	0	1	2	3	4	5	6	7	8	9

Table 20. Mantissas of common logarithms, base 10—*Continued*

N	0	1	2	3	4	5	6	7	8	9
150	**.1761**	**.1764**	**.1767**	**.1770**	**.1772**	**.1775**	**.1778**	**.1781**	**.1784**	**.1787**
151	.1790	.1793	.1796	.1798	.1801	.1804	.1807	.1810	.1813	.1816
152	.1818	.1821	.1824	.1827	.1830	.1833	.1836	.1838	.1841	.1844
153	.1847	.1850	.1853	.1855	.1858	.1861	.1864	.1867	.1870	.1872
154	.1875	.1878	.1881	.1884	.1886	.1889	.1892	.1895	.1898	.1901
155	.1903	.1906	.1909	.1912	.1915	.1917	.1920	.1923	.1926	.1928
156	.1931	.1934	.1937	.1940	.1942	.1945	.1948	.1951	.1953	.1956
157	.1959	.1962	.1965	.1967	.1970	.1973	.1976	.1978	.1981	.1984
158	.1987	.1989	.1992	.1995	.1998	.2000	.2003	.2006	.2009	.2011
159	.2014	.2017	.2019	.2022	.2025	.2028	.2030	.2033	.2036	.2038
160	**.2041**	**.2044**	**.2047**	**.2049**	**.2052**	**.2055**	**.2057**	**.2060**	**.2063**	**.2066**
161	.2068	.2071	.2074	.2076	.2079	.2082	.2084	.2087	.2090	.2092
162	.2095	.2098	.2101	.2103	.2106	.2109	.2111	.2114	.2117	.2119
163	.2122	.2125	.2127	.2130	.2133	.2135	.2138	.2140	.2143	.2146
164	.2148	.2151	.2154	.2156	.2159	.2162	.2164	.2167	.2170	.2172
165	.2175	.2177	.2180	.2183	.2185	.2188	.2191	.2193	.2196	.2198
166	.2201	.2204	.2206	.2209	.2212	.2214	.2217	.2219	.2222	.2225
167	.2227	.2230	.2232	.2235	.2238	.2240	.2243	.2245	.2248	.2251
168	.2253	.2256	.2258	.2261	.2263	.2266	.2269	.2271	.2274	.2276
169	.2279	.2281	.2284	.2287	.2289	.2292	.2294	.2297	.2299	.2302
170	**.2304**	**.2307**	**.2310**	**.2312**	**.2315**	**.2317**	**.2320**	**.2322**	**.2325**	**.2327**
171	.2330	.2333	.2335	.2338	.2340	.2343	.2345	.2348	.2350	.2353
172	.2355	.2358	.2360	.2363	.2365	.2368	.2370	.2373	.2375	.2378
173	.2380	.2383	.2385	.2388	.2390	.2393	.2395	.2398	.2400	.2403
174	.2405	.2408	.2410	.2413	.2415	.2418	.2420	.2423	.2425	.2428
175	.2430	.2433	.2435	.2438	.2440	.2443	.2445	.2448	.2450	.2453
176	.2455	.2458	.2460	.2463	.2465	.2467	.2470	.2472	.2475	.2477
177	.2480	.2482	.2485	.2487	.2490	.2492	.2494	.2497	.2499	.2502
178	.2504	.2507	.2509	.2512	.2514	.2516	.2519	.2521	.2524	.2526
179	.2529	.2531	.2533	.2536	.2538	.2541	.2543	.2545	.2548	.2550
180	**.2553**	**.2555**	**.2558**	**.2560**	**.2562**	**.2565**	**.2567**	**.2570**	**.2572**	**.2574**
181	.2577	.2579	.2582	.2584	.2586	.2589	.2591	.2594	.2596	.2598
182	.2601	.2603	.2605	.2608	.2610	.2613	.2615	.2617	.2620	.2622
183	.2625	.2627	.2629	.2632	.2634	.2636	.2639	.2641	.2643	.2646
184	.2648	.2651	.2653	.2655	.2658	.2660	.2662	.2665	.2667	.2669
185	.2672	.2674	.2676	.2679	.2681	.2683	.2686	.2688	.2690	.2693
186	.2695	.2697	.2700	.2702	.2704	.2707	.2709	.2711	.2714	.2716
187	.2718	.2721	.2723	.2725	.2728	.2730	.2732	.2735	.2737	.2739
188	.2742	.2744	.2746	.2749	.2751	.2753	.2755	.2758	.2760	.2762
189	.2765	.2767	.2769	.2772	.2774	.2776	.2778	.2781	.2783	.2785
190	**.2788**	**.2790**	**.2792**	**.2794**	**.2797**	**.2799**	**.2801**	**.2804**	**.2806**	**.2808**
191	.2810	.2813	.2815	.2817	.2819	.2822	.2824	.2826	.2828	.2831
192	.2833	.2835	.2838	.2840	.2842	.2844	.2847	.2849	.2851	.2853
193	.2856	.2858	.2860	.2862	.2865	.2867	.2869	.2871	.2874	.2876
194	.2878	.2880	.2882	.2885	.2887	.2889	.2891	.2894	.2896	.2898
195	.2900	.2903	.2905	.2907	.2909	.2911	.2914	.2916	.2918	.2920
196	.2923	.2925	.2927	.2929	.2931	.2934	.2936	.2938	.2940	.2942
197	.2945	.2947	.2949	.2951	.2953	.2956	.2958	.2960	.2962	.2964
198	.2967	.2969	.2971	.2973	.2975	.2978	.2980	.2982	.2984	.2986
199	.2989	.2991	.2993	.2995	.2997	.2999	.3002	.3004	.3006	.3008
200	**.3010**	**.3012**	**.3015**	**.3017**	**.3019**	**.3021**	**.3023**	**.3025**	**.3028**	**.3030**
N	0	1	2	3	4	5	6	7	8	9

Table 20. Mantissas of common logarithms, base 10—*Continued*

N	0	1	2	3	4	5	6	7	8	9	Prop. parts		
											1 2 3	4 5 6	7 8 9
20	**.3010**	**.3032**	**.3054**	**.3075**	**.3096**	**.3118**	**.3139**	**.3160**	**.3181**	**.3201**	**2 4 6**	**8 11 13**	**15 17 19**
21	.3222	.3243	.3263	.3284	.3304	.3324	.3345	.3365	.3385	.3404	2 4 6	8 10 12	14 16 18
22	.3424	.3444	.3464	.3483	.3502	.3522	.3541	.3560	.3579	.3598	2 4 6	8 10 12	14 15 17
23	.3617	.3636	.3655	.3674	.3692	.3711	.3729	.3747	.3766	.3784	2 4 6	7 9 11	13 15 17
24	.3802	.3820	.3838	.3856	.3874	.3892	.3909	.3927	.3945	.3962	2 4 5	7 9 11	12 14 16
25	.3979	.3997	.4014	.4031	.4048	.4065	.4082	.4099	.4116	.4133	2 3 5	7 9 10	12 14 15
26	.4150	.4166	.4183	.4200	.4216	.4232	.4249	.4265	.4281	.4298	2 3 5	7 8 10	11 13 15
27	.4314	.4330	.4346	.4362	.4378	.4393	.4409	.4425	.4440	.4456	2 3 5	6 8 9	11 13 14
28	.4472	.4487	.4502	.4518	.4533	.4548	.4564	.4579	.4594	.4609	2 3 5	6 8 9	11 12 14
29	.4624	.4639	.4654	.4669	.4683	.4698	.4713	.4728	.4742	.4757	1 3 4	6 7 9	10 12 13
30	**.4771**	**.4786**	**.4800**	**.4814**	**.4829**	**.4843**	**.4857**	**.4871**	**.4886**	**.4900**	**1 3 4**	**6 7 9**	**10 11 13**
31	.4914	.4928	.4942	.4955	.4969	.4983	.4997	.5011	.5024	.5038	1 3 4	6 7 8	10 11 12
32	.5051	.5065	.5079	.5092	.5105	.5119	.5132	.5145	.5159	.5172	1 3 4	5 7 8	9 11 12
33	.5185	.5198	.5211	.5224	.5237	.5250	.5263	.5276	.5289	.5302	1 3 4	5 6 8	9 10 12
34	.5315	.5328	.5340	.5353	.5366	.5378	.5391	.5403	.5416	.5428	1 3 4	5 6 8	9 10 11
35	.5441	.5453	.5465	.5478	.5490	.5502	.5514	.5527	.5539	.5551	1 2 4	5 6 7	9 10 11
36	.5563	.5575	.5587	.5599	.5611	.5623	.5635	.5647	.5658	.5670	1 2 4	5 6 7	8 10 11
37	.5682	.5694	.5705	.5717	.5729	.5740	.5752	.5763	.5775	.5786	1 2 3	5 6 7	8 9 10
38	.5798	.5809	.5821	.5832	.5843	.5855	.5866	.5877	.5888	.5899	1 2 3	5 6 7	8 9 10
39	.5911	.5922	.5933	.5944	.5955	.5966	.5977	.5988	.5999	.6010	1 2 3	4 5 7	8 9 10
40	**.6021**	**.6031**	**.6042**	**.6053**	**.6064**	**.6075**	**.6085**	**.6096**	**.6107**	**.6117**	**1 2 3**	**4 5 6**	**8 9 10**
41	.6128	.6138	.6149	.6160	.6170	.6180	.6191	.6201	.6212	.6222	1 2 3	4 5 6	7 8 9
42	.6232	.6243	.6253	.6263	.6274	.6284	.6294	.6304	.6314	.6325	1 2 3	4 5 6	7 8 9
43	.6335	.6345	.6355	.6365	.6375	.6385	.6395	.6405	.6415	.6425	1 2 3	4 5 6	7 8 9
44	.6435	.6444	.6454	.6464	.6474	.6484	.6493	.6503	.6513	.6522	1 2 3	4 5 6	7 8 9
45	.6532	.6542	.6551	.6561	.6571	.6580	.6590	.6599	.6609	.6618	1 2 3	4 5 6	7 8 9
46	.6628	.6637	.6646	.6656	.6665	.6675	.6684	.6693	.6702	.6712	1 2 3	4 5 6	7 7 8
47	.6721	.6730	.6739	.6749	.6758	.6767	.6776	.6785	.6794	.6803	1 2 3	4 5 5	6 7 8
48	.6812	.6821	.6830	.6839	.6848	.6857	.6866	.6875	.6884	.6893	1 2 3	4 4 5	6 7 8
49	.6902	.6911	.6920	.6928	.6937	.6946	.6955	.6964	.6972	.6981	1 2 3	4 4 5	6 7 8
50	**.6990**	**.6998**	**.7007**	**.7016**	**.7024**	**.7033**	**.7042**	**.7050**	**.7059**	**.7067**	**1 2 3**	**3 4 5**	**6 7 8**
51	.7076	.7084	.7093	.7101	.7110	.7118	.7126	.7135	.7143	.7152	1 2 3	3 4 5	6 7 8
52	.7160	.7168	.7177	.7185	.7193	.7202	.7210	.7218	.7226	.7235	1 2 2	3 4 5	6 7 7
53	.7243	.7251	.7259	.7267	.7275	.7284	.7292	.7300	.7308	.7316	1 2 2	3 4 5	6 6 7
54	.7324	.7332	.7340	.7348	.7356	.7364	.7372	.7380	.7388	.7396	1 2 2	3 4 5	6 6 7
55	.7404	.7412	.7419	.7427	.7435	.7443	.7451	.7459	.7466	.7474	1 2 2	3 4 5	5 6 7
56	.7482	.7490	.7497	.7505	.7513	.7520	.7528	.7536	.7543	.7551	1 2 2	3 4 5	5 6 7
57	.7559	.7566	.7574	.7582	.7589	.7597	.7604	.7612	.7619	.7627	1 2 2	3 4 5	5 6 7
58	.7634	.7642	.7649	.7657	.7664	.7672	.7679	.7686	.7694	.7701	1 1 2	3 4 4	5 6 7
59	.7709	.7716	.7723	.7731	.7738	.7745	.7752	.7760	.7767	.7774	1 1 2	3 4 4	5 6 7
60	**.7782**	**.7789**	**.7796**	**.7803**	**.7810**	**.7818**	**.7825**	**.7832**	**.7839**	**.7846**	**1 1 2**	**3 4 4**	**5 6 6**
61	.7853	.7860	.7868	.7875	.7882	.7889	.7896	.7903	.7910	.7917	1 1 2	3 4 4	5 6 6
62	.7924	.7931	.7938	.7945	.7952	.7959	.7966	.7973	.7980	.7987	1 1 2	3 3 4	5 6 6
63	.7993	.8000	.8007	.8014	.8021	.8028	.8035	.8041	.8048	.8055	1 1 2	3 3 4	5 5 6
64	.8062	.8069	.8075	.8082	.8089	.8096	.8102	.8109	.8116	.8122	1 1 2	3 3 4	5 5 6
65	.8129	.8136	.8142	.8149	.8156	.8162	.8169	.8176	.8182	.8189	1 1 2	3 3 4	5 5 6
66	.8195	.8202	.8209	.8215	.8222	.8228	.8235	.8241	.8248	.8254	1 1 2	3 3 4	5 5 6
67	.8261	.8267	.8274	.8280	.8287	.8293	.8299	.8306	.8312	.8319	1 1 2	3 3 4	5 5 6
68	.8325	.8331	.8338	.8344	.8351	.8357	.8363	.8370	.8376	.8382	1 1 2	3 3 4	4 5 6
69	.8388	.8395	.8401	.8407	.8414	.8420	.8426	.8432	.8439	.8445	1 1 2	3 3 4	4 5 6
70	**.8451**	**.8457**	**.8463**	**.8470**	**.8476**	**.8482**	**.8488**	**.8494**	**.8500**	**.8506**	**1 1 2**	**2 3 4**	**4 5 6**
N	0	1	2	3	4	5	6	7	8	9			

Table 20. Mantissas of common logarithms, base 10—*Continued*

N	0	1	2	3	4	5	6	7	8	9	Prop. parts		
											1 2 3	4 5 6	7 8 9
70	**.8451**	**.8457**	**.8463**	**.8470**	**.8476**	**.8482**	**.8488**	**.8494**	**.8500**	**.8506**	1 1 2	2 3 4	4 5 6
71	.8513	.8519	.8525	.8531	.8537	.8543	.8549	.8555	.8561	.8567	1 1 2	2 3 4	4 5 5
72	.8573	.8579	.8585	.8591	.8597	.8603	.8609	.8615	.8621	.8627	1 1 2	2 3 4	4 5 5
73	.8633	.8639	.8645	.8651	.8657	.8663	.8669	.8675	.8681	.8686	1 1 2	2 3 4	4 5 5
74	.8692	.8698	.8704	.8710	.8716	.8722	.8727	.8733	.8739	.8745	1 1 2	2 3 3	4 5 5
75	.8751	.8756	.8762	.8768	.8774	.8779	.8785	.8791	.8797	.8802	1 1 2	2 3 3	4 5 5
76	.8808	.8814	.8820	.8825	.8831	.8837	.8842	.8848	.8854	.8859	1 1 2	2 3 3	4 5 5
77	.8865	.8871	.8876	.8882	.8887	.8893	.8899	.8904	.8910	.8915	1 1 2	2 3 3	4 4 5
78	.8921	.8927	.8932	.8938	.8943	.8949	.8954	.8960	.8965	.8971	1 1 2	2 3 3	4 4 5
79	.8976	.8982	.8987	.8993	.8998	.9004	.9009	.9015	.9020	.9025	1 1 2	2 3 3	4 4 5
80	**.9031**	**.9036**	**.9042**	**.9047**	**.9053**	**.9058**	**.9063**	**.9069**	**.9074**	**.9079**	1 1 2	2 3 3	4 4 5
81	.9085	.9090	.9096	.9101	.9106	.9112	.9117	.9122	.9128	.9133	1 1 2	2 3 3	4 4 5
82	.9138	.9143	.9149	.9154	.9159	.9165	.9170	.9175	.9180	.9186	1 1 2	2 3 3	4 4 5
83	.9191	.9196	.9201	.9206	.9212	.9217	.9222	.9227	.9232	.9238	1 1 2	2 3 3	4 4 5
84	.9243	.9248	.9253	.9258	.9263	.9269	.9274	.9279	.9284	.9289	1 1 2	2 3 3	4 4 5
85	.9294	.9299	.9304	.9309	.9315	.9320	.9325	.9330	.9335	.9340	1 1 2	2 3 3	4 4 5
86	.9345	.9350	.9355	.9360	.9365	.9370	.9375	.9380	.9385	.9390	1 1 2	2 3 3	4 4 5
87	.9395	.9400	.9405	.9410	.9415	.9420	.9425	.9430	.9435	.9440	0 1 1	2 2 3	3 4 4
88	.9445	.9450	.9455	.9460	.9465	.9469	.9474	.9479	.9484	.9489	0 1 1	2 2 3	3 4 4
89	.9494	.9499	.9504	.9509	.9513	.9518	.9523	.9528	.9533	.9538	0 1 1	2 2 3	3 4 4
90	**.9542**	**.9547**	**.9552**	**.9557**	**.9562**	**.9566**	**.9571**	**.9576**	**.9581**	**.9586**	0 1 1	2 2 3	3 4 4
91	.9590	.9595	.9600	.9605	.9609	.9614	.9619	.9624	.9628	.9633	0 1 1	2 2 3	3 4 4
92	.9638	.9643	.9647	.9652	.9657	.9661	.9666	.9671	.9675	.9680	0 1 1	2 2 3	3 4 4
93	.9685	.9689	.9694	.9699	.9703	.9708	.9713	.9717	.9722	.9727	0 1 1	2 2 3	3 4 4
94	.9731	.9736	.9741	.9745	.9750	.9754	.9759	.9763	.9768	.9773	0 1 1	2 2 3	3 4 4
95	.9777	.9782	.9786	.9791	.9795	.9800	.9805	.9809	.9814	.9818	0 1 1	2 2 3	3 4 4
96	.9823	.9827	.9832	.9836	.9841	.9845	.9850	.9854	.9859	.9863	0 1 1	2 2 3	3 4 4
97	.9868	.9872	.9877	.9881	.9886	.9890	.9894	.9899	.9903	.9908	0 1 1	2 2 3	3 4 4
98	.9912	.9917	.9921	.9926	.9930	.9934	.9939	.9943	.9948	.9952	0 1 1	2 2 3	3 4 4
99	.9956	.9961	.9965	.9969	.9974	.9978	.9983	.9987	.9991	.9996	0 1 1	2 2 3	3 3 4
100	**.0000**	**.0004**	**.0009**	**.0013**	**.0017**	**.0022**	**.0026**	**.0030**	**.0035**	**.0039**			
N	0	1	2	3	4	5	6	7	8	9			

Table 21. Numerical constants

Constant	Value	Constant	Value	Constant	Value
e	2.718282	π	3.141593	$\sqrt{2}$	1.414214
$1/e$	0.367879	$1/\pi$	0.318310	$\sqrt{3}$	1.732051
e^2	7.389056	π^2	9.869604	$\sqrt{5}$	2.236068
$1/e^2$	0.135335	$1/\pi^2$	0.101321	$\sqrt[3]{2}$	1.259921
$\sqrt{e}$	1.648721	$\sqrt{\pi}$	1.772454	$\sqrt[3]{3}$	1.442250
$\sqrt[3]{e}$	1.395612	$1/\sqrt{\pi}$	0.564190	1 radian	57.295780 degrees
$\log_{10} e$	0.434294	π^3	31.00628	1 radian	3437.7468 minutes
$1/\log_{10} e$	2.302585	$1/\pi^3$	0.032252	1 radian	206264.81 seconds
$\log_{10} \pi$	0.497150	$\sqrt[3]{\pi}$	1.464592	1 degree	0.017453 radian
$\log_e \pi$	1.144730	$1/\sqrt[3]{\pi}$	0.682784	1 minute	0.0002909 radian
$\log_e 10$	2.302585	$\pi/4$	0.785398	1 second	0.00000485 radian

Table 22. Cologarithms

	0	1	2	3	4	5	6	7	8	9	Prop. parts		
											1 2 3	4 5 6	7 8 9
10		**9957**	**9914**	**9872**	**9830**	**9788**	**9747**	**9706**	**9666**	**9626**	**4 8 12**	**17 21 25**	**29 33 37**
11	9586	9547	9508	9469	9431	9393	9355	9318	9281	9245	4 8 11	15 19 23	26 30 34
12	9208	9172	9136	9101	9066	9031	8996	8962	8928	8894	3 7 10	14 17 21	24 28 31
13	8861	8827	8794	8761	8729	8697	8665	8633	8601	8570	3 6 10	13 16 19	23 26 29
14	8539	8508	8477	8447	8416	8386	8356	8327	8297	8268	3 6 9	12 15 18	21 24 27
15	8239	8210	8182	8153	8125	8097	8069	8041	8013	7986	3 6 8	11 14 17	20 22 25
16	7959	7932	7905	7878	7852	7825	7799	7773	7747	7721	3 5 8	11 13 16	18 21 24
17	7696	7670	7645	7620	7595	7570	7545	7520	7496	7471	2 5 7	10 12 15	17 20 22
18	7447	7423	7399	7375	7352	7328	7305	7282	7258	7235	2 5 7	9 12 14	16 19 21
19	7212	7190	7167	7144	7122	7100	7077	7055	7033	7011	2 4 7	9 11 13	16 18 20
20	**6990**	**6968**	**6946**	**6925**	**6904**	**6882**	**6861**	**6840**	**6819**	**6799**	**2 4 6**	**8 11 13**	**15 17 19**
21	6778	6757	6737	6716	6696	6676	6655	6635	6615	6596	2 4 6	8 10 12	14 16 18
22	6576	6556	6536	6517	6497	6478	6459	6440	6421	6402	2 4 6	8 10 12	14 15 17
23	6383	6364	6345	6326	6308	6289	6271	6253	6234	6216	2 4 6	7 9 11	13 15 17
24	6198	6180	6162	6144	6126	6108	6091	6073	6055	6038	2 4 5	7 9 11	12 14 16
25	6021	6003	5986	5969	5952	5935	5918	5901	5884	5867	2 3 5	7 9 10	12 14 15
26	5850	5834	5817	5800	5784	5768	5751	5735	5719	5702	2 3 5	7 8 10	11 13 15
27	5686	5670	5654	5638	5622	5607	5591	5575	5560	5544	2 3 5	6 8 9	11 13 14
28	5528	5513	5498	5482	5467	5452	5436	5421	5406	5391	2 3 5	6 8 9	11 12 14
29	5376	5361	5346	5331	5317	5302	5287	5272	5258	5243	1 3 4	6 7 9	10 12 13
30	**5229**	**5214**	**5200**	**5186**	**5171**	**5157**	**5143**	**5129**	**5114**	**5100**	**1 3 4**	**6 7 9**	**10 11 13**
31	5086	5072	5058	5045	5031	5017	5003	4989	4976	4962	1 3 4	6 7 8	10 11 12
32	4948	4935	4921	4908	4895	4881	4868	4855	4841	4828	1 3 4	5 7 8	9 11 12
33	4815	4802	4789	4776	4763	4750	4737	4724	4711	4698	1 3 4	5 6 8	9 10 12
34	4685	4672	4660	4647	4634	4622	4609	4597	4584	4572	1 3 4	5 6 8	9 10 11
35	4559	4547	4535	4522	4510	4498	4486	4473	4461	4449	1 2 4	5 6 7	9 10 11
36	4437	4425	4413	4401	4389	4377	4365	4353	4342	4330	1 2 4	5 6 7	9 10 11
37	4318	4306	4295	4283	4271	4260	4248	4237	4225	4214	1 2 3	5 6 7	8 9 10
38	4202	4191	4179	4168	4157	4145	4134	4123	4112	4101	1 2 3	5 6 7	8 9 10
39	4089	4078	4067	4056	4045	4034	4023	4012	4001	3990	1 2 3	4 6 7	8 9 10
40	**3979**	**3969**	**3958**	**3947**	**3936**	**3925**	**3915**	**3904**	**3893**	**3883**	**1 2 3**	**4 5 6**	**7 8 9**
41	3872	3862	3851	3840	3830	3820	3809	3799	3788	3778	1 2 3	4 5 6	7 8 9
42	3768	3757	3747	3737	3726	3716	3706	3696	3686	3675	1 2 3	4 5 6	7 8 9
43	3665	3655	3645	3635	3625	3615	3605	3595	3585	3575	1 2 3	4 5 6	7 8 9
44	3565	3556	3546	3536	3526	3516	3507	3497	3487	3478	1 2 3	4 5 6	7 8 9
45	3468	3458	3449	3439	3429	3420	3410	3401	3391	3382	1 2 3	4 5 6	7 8 9
46	3372	3363	3354	3344	3335	3325	3316	3307	3298	3288	1 2 3	4 5 6	7 7 8
47	3279	3270	3261	3251	3242	3233	3224	3215	3206	3197	1 2 3	4 5 5	6 7 8
48	3188	3179	3170	3161	3152	3143	3134	3125	3116	3107	1 2 3	4 4 5	6 7 8
49	3098	3089	3080	3071	3063	3054	3045	3036	3028	3019	1 2 3	4 4 5	6 7 8
50	**3010**	**3002**	**2993**	**2984**	**2976**	**2967**	**2958**	**2950**	**2941**	**2933**	**1 2 3**	**3 4 5**	**6 7 8**
51	2924	2916	2907	2899	2890	2882	2874	2865	2857	2848	1 2 3	3 4 5	6 7 8
52	2840	2832	2823	2815	2807	2798	2790	2782	2774	2765	1 2 2	3 4 5	6 7 7
53	2757	2749	2741	2733	2725	2716	2708	2700	2692	2684	1 2 2	3 4 5	6 6 7
54	2676	2668	2660	2652	2644	2636	2628	2620	2612	2604	1 2 2	3 4 5	6 6 7

CAUTION: Proportional parts to be subtracted.

Table 22. Cologarithms—*Continued*

	0	1	2	3	4	5	6	7	8	9	Prop. parts		
											1 2 3	4 5 6	7 8 9
55	2596	2588	2581	2573	2565	2557	2549	2541	2534	2526	1 2 2	3 4 5	5 6 7
56	2518	2510	2503	2495	2487	2480	2472	2464	2457	2449	1 2 2	3 4 5	5 6 7
57	2441	2434	2426	2418	2411	2403	2396	2388	2381	2373	1 2 2	3 4 5	5 6 7
58	2366	2358	2351	2343	2336	2328	2321	2314	2306	2299	1 1 2	3 4 4	5 6 7
59	2291	2284	2277	2269	2262	2255	2248	2240	2233	2226	1 1 2	3 4 4	5 6 7
60	**2218**	**2211**	**2204**	**2197**	**2190**	**2182**	**2175**	**2168**	**2161**	**2154**	**1 1 2**	**3 4 4**	**5 6 6**
61	2147	2140	2132	2125	2118	2111	2104	2097	2090	2083	1 1 2	3 4 4	5 6 6
62	2076	2069	2062	2055	2048	2041	2034	2027	2020	2013	1 1 2	3 3 4	5 6 6
63	2007	2000	1993	1986	1979	1972	1965	1959	1952	1945	1 1 2	3 3 4	5 5 6
64	1938	1931	1925	1918	1911	1904	1898	1891	1884	1878	1 1 2	3 3 4	5 5 6
65	1871	1864	1858	1851	1844	1838	1831	1824	1818	1811	1 1 2	3 3 4	5 5 6
66	1805	1798	1791	1785	1778	1772	1765	1759	1752	1746	1 1 2	3 3 4	5 5 6
67	1739	1733	1726	1720	1713	1707	1701	1694	1688	1681	1 1 2	3 3 4	4 5 6
68	1675	1669	1662	1656	1649	1643	1637	1630	1624	1618	1 1 2	3 3 4	4 5 6
69	1612	1605	1599	1593	1586	1580	1574	1568	1561	1555	1 1 2	3 3 4	4 5 6
70	**1549**	**1543**	**1537**	**1530**	**1524**	**1518**	**1512**	**1506**	**1500**	**1494**	**1 1 2**	**2 3 4**	**4 5 5**
71	1487	1481	1475	1469	1463	1457	1451	1445	1439	1433	1 1 2	2 3 4	4 5 5
72	1427	1421	1415	1409	1403	1397	1391	1385	1379	1373	1 1 2	2 3 4	4 5 5
73	1367	1361	1355	1349	1343	1337	1331	1325	1319	1314	1 1 2	2 3 4	4 5 5
74	1308	1302	1296	1290	1284	1278	1273	1267	1261	1255	1 1 2	2 3 3	4 5 5
75	1249	1244	1238	1232	1226	1221	1215	1209	1203	1198	1 1 2	2 3 3	4 5 5
76	1192	1186	1180	1175	1169	1163	1158	1152	1146	1141	1 1 2	2 3 3	4 5 5
77	1135	1129	1124	1118	1113	1107	1101	1096	1090	1085	1 1 2	2 3 3	4 4 5
78	1079	1073	1068	1062	1057	1051	1046	1040	1035	1029	1 1 2	2 3 3	4 4 5
79	1024	1018	1013	1007	1002	0996	0991	0985	0980	0975	1 1 2	2 3 3	4 4 5
80	**0969**	**0964**	**0958**	**0953**	**0947**	**0942**	**0937**	**0931**	**0926**	**0921**	**1 1 2**	**2 3 3**	**4 4 5**
81	0915	0910	0904	0899	0894	0888	0883	0878	0872	0867	1 1 2	2 3 3	4 4 5
82	0862	0857	0851	0846	0841	0835	0830	0825	0820	0814	1 1 2	2 3 3	4 4 5
83	0809	0804	0799	0794	0788	0783	0778	0773	0768	0762	1 1 2	2 3 3	4 4 5
84	0757	0752	0747	0742	0737	0731	0726	0721	0716	0711	1 1 2	2 3 3	4 4 5
85	0706	0701	0696	0691	0685	0680	0675	0670	0665	0660	1 1 2	2 3 3	4 4 5
86	0655	0650	0645	0640	0635	0630	0625	0620	0615	0610	1 1 2	2 3 3	4 4 5
87	0605	0600	0595	0590	0585	0580	0575	0570	0565	0560	0 1 1	2 2 3	3 4 4
88	0555	0550	0545	0540	0535	0531	0526	0521	0516	0511	0 1 1	2 2 3	3 4 4
89	0506	0501	0496	0491	0487	0482	0477	0472	0467	0462	0 1 1	2 2 3	3 4 4
90	**0458**	**0453**	**0448**	**0443**	**0438**	**0434**	**0429**	**0424**	**0419**	**0414**	**0 1 1**	**2 2 3**	**3 4 4**
91	0410	0405	0400	0395	0391	0386	0381	0376	0372	0367	0 1 1	2 2 3	3 4 4
92	0362	0357	0353	0348	0343	0339	0334	0329	0325	0320	0 1 1	2 2 3	3 4 4
93	0315	0311	0306	0301	0297	0292	0287	0283	0278	0273	0 1 1	2 2 3	3 4 4
94	0269	0264	0259	0255	0250	0246	0241	0237	0232	0227	0 1 1	2 2 3	3 4 4
95	0223	0218	0214	0209	0205	0200	0195	0191	0186	0182	0 1 1	2 2 3	3 4 4
96	0177	0173	0168	0164	0159	0155	0150	0146	0141	0137	0 1 1	2 2 3	3 4 4
97	0132	0128	0123	0119	0114	0110	0106	0101	0097	0092	0 1 1	2 2 3	3 4 4
98	0088	0083	0079	0074	0070	0066	0061	0057	0052	0048	0 1 1	2 2 3	3 4 4
99	0044	0039	0035	0031	0026	0022	0017	0013	0009	0004	0 1 1	2 2 3	3 3 4

CAUTION: Proportional parts to be subtracted.

Table 23. Antilogarithms

	0	1	2	3	4	5	6	7	8	9	Prop. parts		
											1 2 3	4 5 6	7 8 9
.00	1000	1002	1005	1007	1009	1012	1014	1016	1019	1021	0 0 1	1 1 1	2 2 2
.01	1023	1026	1028	1030	1033	1035	1038	1040	1042	1045	0 0 1	1 1 1	2 2 2
.02	1047	1050	1052	1054	1057	1059	1062	1064	1067	1069	0 0 1	1 1 1	2 2 2
.03	1072	1074	1076	1079	1081	1084	1086	1089	1091	1094	0 0 1	1 1 1	2 2 2
.04	1096	1099	1102	1104	1107	1109	1112	1114	1117	1119	0 1 1	1 1 2	2 2 2
.05	1122	1125	1127	1130	1132	1135	1138	1140	1143	1146	0 1 1	1 1 2	2 2 2
.06	1148	1151	1153	1156	1159	1161	1164	1167	1169	1172	0 1 1	1 1 2	2 2 2
.07	1175	1178	1180	1183	1186	1189	1191	1194	1197	1199	0 1 1	1 1 2	2 2 2
.08	1202	1205	1208	1211	1213	1216	1219	1222	1225	1227	0 1 1	1 1 2	2 2 3
.09	1230	1233	1236	1239	1242	1245	1247	1250	1253	1256	0 1 1	1 1 2	2 2 3
.10	1259	1262	1265	1268	1271	1274	1276	1279	1282	1285	0 1 1	1 1 2	2 2 3
.11	1288	1291	1294	1297	1300	1303	1306	1309	1312	1315	0 1 1	1 2 2	2 2 3
.12	1318	1321	1324	1327	1330	1334	1337	1340	1343	1346	0 1 1	1 2 2	2 2 3
.13	1349	1352	1355	1358	1361	1365	1368	1371	1374	1377	0 1 1	1 2 2	2 3 3
.14	1380	1384	1387	1390	1393	1396	1400	1403	1406	1409	0 1 1	1 2 2	2 3 3
.15	1413	1416	1419	1422	1426	1429	1432	1435	1439	1442	0 1 1	1 2 2	2 3 3
.16	1445	1449	1452	1455	1459	1462	1466	1469	1472	1476	0 1 1	1 2 2	2 3 3
.17	1479	1483	1486	1489	1493	1496	1500	1503	1507	1510	0 1 1	1 2 2	2 3 3
.18	1514	1517	1521	1524	1528	1531	1535	1538	1542	1545	0 1 1	1 2 2	2 3 3
.19	1549	1552	1556	1560	1563	1567	1570	1574	1578	1581	0 1 1	1 2 2	3 3 3
.20	1585	1589	1592	1596	1600	1603	1607	1611	1614	1618	0 1 1	1 2 2	3 3 3
.21	1622	1626	1629	1633	1637	1641	1644	1648	1652	1656	0 1 1	2 2 2	3 3 3
.22	1660	1663	1667	1671	1675	1679	1683	1687	1690	1694	0 1 1	2 2 2	3 3 3
.23	1698	1702	1706	1710	1714	1718	1722	1726	1730	1734	0 1 1	2 2 2	3 3 4
.24	1738	1742	1746	1750	1754	1758	1762	1766	1770	1774	0 1 1	2 2 2	3 3 4
.25	1778	1782	1786	1791	1795	1799	1803	1807	1811	1816	0 1 1	2 2 2	3 3 4
.26	1820	1824	1828	1832	1837	1841	1845	1849	1854	1858	0 1 1	2 2 3	3 3 4
.27	1862	1866	1871	1875	1879	1884	1888	1892	1897	1901	0 1 1	2 2 3	3 3 4
.28	1905	1910	1914	1919	1923	1928	1932	1936	1941	1945	0 1 1	2 2 3	3 4 4
.29	1950	1954	1959	1963	1968	1972	1977	1982	1986	1991	0 1 1	2 2 3	3 4 4
.30	1995	2000	2004	2009	2014	2018	2023	2028	2032	2037	0 1 1	2 2 3	3 4 4
.31	2042	2046	2051	2056	2061	2065	2070	2075	2080	2084	0 1 1	2 2 3	3 4 4
.32	2089	2094	2099	2104	2109	2113	2118	2123	2128	2133	0 1 1	2 2 3	3 4 4
.33	2138	2143	2148	2153	2158	2163	2168	2173	2178	2183	0 1 1	2 2 3	3 4 4
.34	2188	2193	2198	2203	2208	2213	2218	2223	2228	2234	1 1 2	2 3 3	4 4 5
.35	2239	2244	2249	2254	2259	2265	2270	2275	2280	2286	1 1 2	2 3 3	4 4 5
.36	2291	2296	2301	2307	2312	2317	2323	2328	2333	2339	1 1 2	2 3 3	4 4 5
.37	2344	2350	2355	2360	2366	2371	2377	2382	2388	2393	1 1 2	2 3 3	4 4 5
.38	2399	2404	2410	2415	2421	2427	2432	2438	2443	2449	1 1 2	2 3 3	4 4 5
.39	2455	2460	2466	2472	2477	2483	2489	2495	2500	2506	1 1 2	2 3 3	4 5 5
.40	2512	2518	2523	2529	2535	2541	2547	2553	2559	2564	1 1 2	2 3 4	4 5 5
.41	2570	2576	2582	2588	2594	2600	2606	2612	2618	2624	1 1 2	2 3 4	4 5 5
.42	2630	2636	2642	2649	2655	2661	2667	2673	2679	2685	1 1 2	2 3 4	4 5 6
.43	2692	2698	2704	2710	2716	2723	2729	2735	2742	2748	1 1 2	3 3 4	4 5 6
.44	2754	2761	2767	2773	2780	2786	2793	2799	2805	2812	1 1 2	3 3 4	4 5 6
.45	2818	2825	2831	2838	2844	2851	2858	2864	2871	2877	1 1 2	3 3 4	5 5 6
.46	2884	2891	2897	2904	2911	2917	2924	2931	2938	2944	1 1 2	3 3 4	5 5 6
.47	2951	2958	2965	2972	2979	2985	2992	2999	3006	3013	1 1 2	3 3 4	5 5 6
.48	3020	3027	3034	3041	3048	3055	3062	3069	3076	3083	1 1 2	3 4 4	5 6 6
.49	3090	3097	3105	3112	3119	3126	3133	3141	3148	3155	1 1 2	3 4 4	5 6 6

Table 23. Antilogarithms—*Continued*

	0	1	2	3	4	5	6	7	8	9	Prop. parts		
											1 2 3	4 5 6	7 8 9
.50	**3162**	**3170**	**3177**	**3184**	**3192**	**3199**	**3206**	**3214**	**3221**	**3228**	**1 1 2**	**3 4 4**	**5 6 7**
.51	3236	3243	3251	3258	3266	3273	3281	3289	3296	3304	1 2 2	3 4 5	5 6 7
.52	3311	3319	3327	3334	3342	3350	3357	3365	3373	3381	1 2 2	3 4 5	5 6 7
.53	3388	3396	3404	3412	3420	3428	3436	3443	3451	3459	1 2 2	3 4 5	6 6 7
.54	3467	3475	3483	3491	3499	3508	3516	3524	3532	3540	1 2 2	3 4 5	6 6 7
.55	3548	3556	3565	3573	3581	3589	3597	3606	3614	3622	1 2 2	3 4 5	6 7 7
.56	3631	3639	3648	3656	3664	3673	3681	3690	3698	3707	1 2 3	3 4 5	6 7 8
.57	3715	3724	3733	3741	3750	3758	3767	3776	3784	3793	1 2 3	3 4 5	6 7 8
.58	3802	3811	3819	3828	3837	3846	3855	3864	3873	3882	1 2 3	4 4 5	6 7 8
.59	3890	3899	3908	3917	3926	3936	3945	3954	3963	3972	1 2 3	4 5 5	6 7 8
.60	**3981**	**3990**	**3999**	**4009**	**4018**	**4027**	**4036**	**4046**	**4055**	**4064**	**1 2 3**	**4 5 6**	**6 7 8**
.61	4074	4083	4093	4102	4111	4121	4130	4140	4150	4159	1 2 3	4 5 6	7 8 9
.62	4169	4178	4188	4198	4207	4217	4227	4236	4246	4256	1 2 3	4 5 6	7 8 9
.63	4266	4276	4285	4295	4305	4315	4325	4335	4345	4355	1 2 3	4 5 6	7 8 9
.64	4365	4375	4385	4395	4406	4416	4426	4436	4446	4457	1 2 3	4 5 6	7 8 9
.65	4467	4477	4487	4498	4508	4519	4529	4539	4550	4560	1 2 3	4 5 6	7 8 9
.66	4571	4581	4592	4603	4613	4624	4634	4645	4656	4667	1 2 3	4 5 6	7 9 10
.67	4677	4688	4699	4710	4721	4732	4742	4753	4764	4775	1 2 3	4 5 7	8 9 10
.68	4786	4797	4808	4819	4831	4842	4853	4864	4875	4887	1 2 3	4 6 7	8 9 10
.69	4898	4909	4920	4932	4943	4955	4966	4977	4989	5000	1 2 3	5 6 7	8 9 10
.70	**5012**	**5023**	**5035**	**5047**	**5058**	**5070**	**5082**	**5093**	**5105**	**5117**	**1 2 4**	**5 6 7**	**8 9 11**
.71	5129	5140	5152	5164	5176	5188	5200	5212	5224	5236	1 2 4	5 6 7	8 10 11
.72	5248	5260	5272	5284	5297	5309	5321	5333	5346	5358	1 2 4	5 6 7	9 10 11
.73	5370	5383	5395	5408	5420	5433	5445	5458	5470	5483	1 3 4	5 6 8	9 10 11
.74	5495	5508	5521	5534	5546	5559	5572	5585	5598	5610	1 3 4	5 6 8	9 10 12
.75	5623	5636	5649	5662	5675	5689	5702	5715	5728	5741	1 3 4	5 7 8	9 10 12
.76	5754	5768	5781	5794	5808	5821	5834	5848	5861	5875	1 3 4	5 7 8	9 11 12
.77	5888	5902	5916	5929	5943	5957	5970	5984	5998	6012	1 3 4	5 7 8	10 11 12
.78	6026	6039	6053	6067	6081	6095	6109	6124	6138	6152	1 3 4	6 7 8	10 11 13
.79	6166	6180	6194	6209	6223	6237	6252	6266	6281	6295	1 3 4	6 7 9	10 11 13
.80	**6310**	**6324**	**6339**	**6353**	**6368**	**6383**	**6397**	**6412**	**6427**	**6442**	**1 3 4**	**6 7 9**	**10 12 13**
.81	6457	6471	6486	6501	6516	6531	6546	6561	6577	6592	2 3 5	6 8 9	11 12 14
.82	6607	6622	6637	6653	6668	6683	6699	6714	6730	6745	2 3 5	6 8 9	11 12 14
.83	6761	6776	6792	6808	6823	6839	6855	6871	6887	6902	2 3 5	6 8 9	11 13 14
.84	6918	6934	6950	6966	6982	6998	7015	7031	7047	7063	2 3 5	6 8 10	11 13 15
.85	7079	7096	7112	7129	7145	7161	7178	7194	7211	7228	2 3 5	7 8 10	12 13 15
.86	7244	7261	7278	7295	7311	7328	7345	7362	7379	7396	2 3 5	7 8 10	12 13 15
.87	7413	7430	7447	7464	7482	7499	7516	7534	7551	7568	2 3 5	7 9 10	12 14 16
.88	7586	7603	7621	7638	7656	7674	7691	7709	7727	7745	2 4 5	7 9 11	12 14 16
.89	7762	7780	7798	7816	7834	7852	7870	7889	7907	7925	2 4 5	7 9 11	13 14 16
.90	**7943**	**7962**	**7980**	**7998**	**8017**	**8035**	**8054**	**8072**	**8091**	**8110**	**2 4 6**	**7 9 11**	**13 15 17**
.91	8128	8147	8166	8185	8204	8222	8241	8260	8279	8299	2 4 6	8 9 11	13 15 17
.92	8318	8337	8356	8375	8395	8414	8433	8453	8472	8492	2 4 6	8 10 12	14 15 17
.93	8511	8531	8551	8570	8590	8610	8630	8650	8670	8690	2 4 6	8 10 12	14 16 18
.94	8710	8730	8750	8770	8790	8810	8831	8851	8872	8892	2 4 6	8 10 12	14 16 18
.95	8913	8933	8954	8974	8995	9016	9036	9057	9078	9099	2 4 6	8 10 12	15 17 19
.96	9120	9141	9162	9183	9204	9226	9247	9268	9290	9311	2 4 6	8 11 13	15 17 19
.97	9333	9354	9376	9397	9419	9441	9462	9484	9506	9528	2 4 7	9 11 13	15 17 20
.98	9550	9572	9594	9616	9638	9661	9683	9705	9727	9750	2 4 7	9 11 13	16 18 20
.99	9772	9795	9817	9840	9863	9886	9908	9931	9954	9977	2 5 7	9 11 14	16 18 20

Table 24. Logarithmic sines *a*

Degrees	0′	10′	20′	30′	40′	50′	60′		Prop. parts 1′	2′	3′	4′	5′
0	Inf. Neg.	7.4637	7.7648	7.9408	8.0658	8.1627	8.2419	89					
1	8.2419	8.3088	8.3668	8.4179	8.4637	8.5050	8.5428	88					
2	8.5428	8.5776	8.6097	8.6397	8.6677	8.6940	8.7188	87					
3	8.7188	8.7423	8.7645	8.7857	8.8059	8.8251	8.8436	86			*a*		
4	8.8436	8.8613	8.8783	8.8946	8.9104	8.9256	8.9403	85					
5	8.9403	8.9545	8.9682	8.9816	8.9945	9.0070	9.0192	84					
6	9.0192	9.0311	9.0426	9.0539	9.0648	9.0755	9.0859	83					
7	9.0859	9.0961	9.1060	9.1157	9.1252	9.1345	9.1436	82					
8	9.1436	9.1525	9.1612	9.1697	9.1781	9.1863	9.1943	81					
9	9.1943	9.2022	9.2100	9.2176	9.2251	9.2324	9.2397	80					
10	9.2397	9.2468	9.2538	9.2606	9.2674	9.2740	9.2806	79					
11	9.2806	9.2870	9.2934	9.2997	9.3058	9.3119	9.3179	78					
12	9.3179	9.3238	9.3296	9.3353	9.3410	9.3466	9.3521	77					
13	9.3521	9.3575	9.3629	9.3682	9.3734	9.3786	9.3837	76					
14	9.3837	9.3887	9.3937	9.3986	9.4035	9.4083	9.4130	75					
15	9.4130	9.4177	9.4223	9.4269	9.4314	9.4359	9.4403	74					
16	9.4403	9.4447	9.4491	9.4533	9.4576	9.4618	9.4659	73					
17	9.4659	9.4700	9.4741	9.4781	9.4821	9.4861	9.4900	72	4	8	12	16	20
18	9.4900	9.4939	9.4977	9.5015	9.5052	9.5090	9.5126	71	4	8	11	15	19
19	9.5126	9.5163	9.5199	9.5235	9.5270	9.5306	9.5341	70	4	7	11	14	18
20	9.5341	9.5375	9.5409	9.5443	9.5477	9.5510	9.5543	69	3	7	10	14	17
21	9.5543	9.5576	9.5609	9.5641	9.5673	9.5704	9.5736	68	3	6	10	13	16
22	9.5736	9.5767	9.5798	9.5828	9.5859	9.5889	9.5919	67	3	6	9	12	15
23	9.5919	9.5948	9.5978	9.6007	9.6036	9.6065	9.6093	66	3	6	9	12	15
24	9.6093	9.6121	9.6149	9.6177	9.6205	9.6232	9.6259	65	3	6	8	11	14
25	9.6259	9.6286	9.6313	9.6340	9.6366	9.6392	9.6418	64	3	5	8	11	13
26	9.6418	9.6444	9.6470	9.6495	9.6521	9.6546	9.6570	63	3	5	8	10	13
27	9.6570	9.6595	9.6620	9.6644	9.6668	9.6692	9.6716	62	2	5	7	10	12
28	9.6716	9.6740	9.6763	9.6787	9.6810	9.6833	9.6856	61	2	5	7	9	12
29	9.6856	9.6878	9.6901	9.6923	9.6946	9.6968	9.6990	60	2	4	7	9	11
30	9.6990	9.7012	9.7033	9.7055	9.7076	9.7097	9.7118	59	2	4	6	9	11
31	9.7118	9.7139	9.7160	9.7181	9.7201	9.7222	9.7242	58	2	4	6	8	10
32	9.7242	9.7262	9.7282	9.7302	9.7322	9.7342	9.7361	57	2	4	6	8	10
33	9.7361	9.7380	9.7400	9.7419	9.7438	9.7457	9.7476	56	2	4	6	8	10
34	9.7476	9.7494	9.7513	9.7531	9.7550	9.7568	9.7586	55	2	4	6	7	9
35	9.7586	9.7604	9.7622	9.7640	9.7657	9.7675	9.7692	54	2	4	5	7	9
36	9.7692	9.7710	9.7727	9.7744	9.7761	9.7778	9.7795	53	2	3	5	7	9
37	9.7795	9.7811	9.7828	9.7844	9.7861	9.7877	9.7893	52	2	3	5	7	8
38	9.7893	9.7910	9.7926	9.7941	9.7957	9.7973	9.7989	51	2	3	5	6	8
39	9.7989	9.8004	9.8020	9.8035	9.8050	9.8066	9.8081	50	2	3	5	6	8
40	9.8081	9.8096	9.8111	9.8125	9.8140	9.8155	9.8169	49	1	3	4	6	7
41	9.8169	9.8184	9.8198	9.8213	9.8227	9.8241	9.8255	48	1	3	4	6	7
42	9.8255	9.8269	9.8283	9.8297	9.8311	9.8324	9.8338	47	1	3	4	6	7
43	9.8338	9.8351	9.8365	9.8378	9.8391	9.8405	9.8418	46	1	3	4	5	7
44	9.8418	9.8431	9.8444	9.8457	9.8469	9.8482	9.8495	45	1	3	4	5	6
	60′	50′	40′	30′	20′	10′	0′	Degrees	1′	2′	3′	4′	5′

Interpolate

Prop. parts

Logarithmic cosines. Read up. Subtract proportional parts.

a Annex −10 to tabular values. Interpolation will be inaccurate for logarithmic sines and tangents of angles less than 6°, and for cosines and cotangents of angles greater than 83°. Five- or more-place tables should be consulted for such angles.

Table 24. Logarithmic sines—*Continued*

Degrees	0′	10′	20′	30′	40′	50′	60′		Prop. parts				
									1′	2′	3′	4′	5′
45	9.8495	9.8507	9.8520	9.8532	9.8545	9.8557	9.8569	44	1	2	4	5	6
46	9.8569	9.8582	9.8594	9.8606	9.8618	9.8629	9.8641	43	1	2	4	5	6
47	9.8641	9.8653	9.8665	9.8676	9.8688	9.8699	9.8711	42	1	2	3	5	6
48	9.8711	9.8722	9.8733	9.8745	9.8756	9.8767	9.8778	41	1	2	3	4	6
49	9.8778	9.8789	9.8800	9.8810	9.8821	9.8832	9.8843	40	1	2	3	4	5
50	**9.8843**	**9.8853**	**9.8864**	**9.8874**	**9.8884**	**9.8895**	**9.8905**	39	1	2	3	4	5
51	9.8905	9.8915	9.8925	9.8935	9.8945	9.8955	9.8965	38	1	2	3	4	5
52	9.8965	9.8975	9.8985	9.8995	9.9004	9.9014	9.9023	37	1	2	3	4	5
53	9.9023	9.9033	9.9042	9.9052	9.9061	9.9070	9.9080	36	1	2	3	4	5
54	9.9080	9.9089	9.9098	9.9107	9.9116	9.9125	9.9134	35	1	2	3	4	5
55	9.9134	9.9142	9.9151	9.9160	9.9169	9.9177	9.9186	34	1	2	3	3	4
56	9.9186	9.9194	9.9203	9.9211	9.9219	9.9228	9.9236	33	1	2	3	3	4
57	9.9236	9.9244	9.9252	9.9260	9.9268	9.9276	9.9284	32	1	2	2	3	4
58	9.9284	9.9292	9.9300	9.9308	9.9315	9.9323	9.9331	31	1	2	2	3	4
59	9.9331	9.9338	9.9346	9.9353	9.9361	9.9368	9.9375	30	1	1	2	3	4
60	**9.9375**	**9.9382**	**9.9390**	**9.9397**	**9.9404**	**9.9411**	**9.9418**	**29**	**1**	**1**	**2**	**3**	**4**
61	9.9418	9.9425	9.9432	9.9439	9.9446	9.9453	9.9459	28	1	1	2	3	3
62	9.9459	9.9466	9.9473	9.9479	9.9486	9.9492	9.9499	27	1	1	2	3	3
63	9.9499	9.9505	9.9512	9.9518	9.9524	9.9530	9.9537	26	1	1	2	3	3
64	9.9537	9.9543	9.9549	9.9555	9.9561	9.9567	9.9573	25	1	1	2	2	3
65	9.9573	9.9579	9.9584	9.9590	9.9596	9.9602	9.9607	24	1	1	2	2	3
66	9.9607	9.9613	9.9618	9.9624	9.9629	9.9635	9.9640	23	1	1	2	2	3
67	9.9640	9.9646	9.9651	9.9656	9.9661	9.9667	9.9672	22	1	1	2	2	3
68	9.9672	9.9677	9.9682	9.9687	9.9692	9.9697	9.9702	21	0	1	1	2	2
69	9.9702	9.9706	9.9711	9.9716	9.9721	9.9725	9.9730	20	0	1	1	2	2
70	**9.9730**	**9.9734**	**9.9739**	**9.9743**	**9.9748**	**9.9752**	**9.9757**	**19**	**0**	**1**	**1**	**2**	**3**
71	9.9757	9.9761	9.9765	9.9770	9.9774	9.9778	9.9782	18	0	1	1	2	2
72	9.9782	9.9786	9.9790	9.9794	9.9798	9.9802	9.9806	17	0	1	1	2	2
73	9.9806	9.9810	9.9814	9.9817	9.9821	9.9825	9.9828	16	0	1	1	1	2
74	9.9828	9.9832	9.9836	9.9839	9.9843	9.9846	9.9849	15	0	1	1	1	2
75	9.9849	9.9853	9.9856	9.9859	9.9863	9.9866	9.9869	14	0	1	1	1	2
76	9.9869	9.9872	9.9875	9.9878	9.9881	9.9884	9.9887	13	0	1	1	1	2
77	9.9887	9.9890	9.9893	9.9896	9.9899	9.9901	9.9904	12	0	1	1	1	1
78	9.9904	9.9907	9.9909	9.9912	9.9914	9.9917	9.9919	11	0	1	1	1	1
79	9.9919	9.9922	9.9924	9.9927	9.9929	9.9931	9.9934	10	0	0	1	1	1
80	**9.9934**	**9.9936**	**9.9938**	**9.9940**	**9.9942**	**9.9944**	**9.9946**	**9**	0	0	1	1	1
81	9.9946	9.9948	9.9950	9.9952	9.9954	9.9956	9.9958	8	0	0	1	1	1
82	9.9958	9.9959	9.9961	9.9963	9.9964	9.9966	9.9968	7	0	0	0	1	1
83	9.9968	9.9969	9.9971	9.9972	9.9973	9.9975	9.9976	6	0	0	0	1	1
84	9.9976	9.9977	9.9979	9.9980	9.9981	9.9982	9.9983	5	0	0	0	0	1
85	9.9983	9.9985	9.9986	9.9987	9.9988	9.9989	9.9989	4	0	0	0	0	0
86	9.9989	9.9990	9.9991	9.9992	9.9993	9.9993	9.9994	3	0	0	0	0	0
87	9.9994	9.9995	9.9995	9.9996	9.9996	9.9997	9.9997	2	0	0	0	0	0
88	9.9997	9.9998	9.9998	9.9999	9.9999	9.9999	9.9999	1	0	0	0	0	0
89	9.9999	10.000	10.000	10.000	10.000	10.000	10.000	0	0	0	0	0	0
	60′	50′	40′	30′	20′	10′	0′	Degrees	1′	2′	3′	4′	5′
									Prop. parts				

Logarithmic cosines. Read up. Subtract proportional parts.

Table 25. Logarithmic tangents *a*

Degrees	0′	10′	20′	30′	40′	50′	60′		Prop. parts 1′	2′	3′	4′	5′
0	**Inf. Neg.**	**7.4637**	**7.7648**	**7.9409**	**8.0658**	**8.1627**	**8.2419**	**89**					
1	8.2419	8.3089	8.3669	8.4181	8.4638	8.5053	8.5431	88					
2	8.5431	8.5779	8.6101	8.6401	8.6682	8.6945	8.7194	87					
3	8.7194	8.7429	8.7652	8.7865	8.8067	8.8261	8.8446	86			*a*		
4	8.8446	8.8624	8.8795	8.8960	8.9118	8.9272	8.9420	85					
5	8.9420	8.9563	8.9701	8.9836	8.9966	9.0093	9.0216	84					
6	9.0216	9.0336	9.0453	9.0567	9 0678	9.0786	9.0891	83					
7	9.0891	9.0995	9.1096	9.1194	9.1291	9.1385	9.1478	82					
8	9.1478	9.1569	9.1658	9.1745	9.1831	9.1915	9.1997	81					
9	9.1997	9.2078	9.2158	9.2236	9.2313	9.2389	9.2463	80					
10	**9.2463**	**9.2536**	**9.2609**	**9.2680**	**9.2750**	**9.2819**	**9.2887**	**79**					
11	9.2887	9.2953	9.3020	9.3085	9.3149	9.3212	9.3275	78					
12	9.3275	9.3336	9.3397	9.3458	9.3517	9.3576	9.3634	77					
13	9.3634	9.3691	9.3748	9.3804	9.3859	9.3914	9.3968	76			Interpolate		
14	9.3968	9.4021	9.4074	9.4127	9.4178	9.4230	9.4281	75					
15	9.4281	9.4331	9.4381	9.4430	9.4479	9.4527	9.4575	74					
16	9.4575	9.4622	9.4669	9.4716	9.4762	9.4808	9.4853	73	5	9	14	19	23
17	9.4853	9.4898	9.4943	9.4987	9.5031	9.5075	9.5118	72	4	9	13	18	22
18	9.5118	9.5161	9.5203	9.5245	9.5287	9.5329	9.5370	71	4	8	13	17	21
19	9.5370	9.5411	9.5451	9.5491	9.5531	9.5571	9.5611	70	4	8	12	16	20
20	**9.5611**	**9.5650**	**9.5689**	**9.5727**	**9.5766**	**9.5804**	**9.5842**	**69**	**4**	**8**	**12**	**15**	**19**
21	9.5842	9.5879	9.5917	9.5954	9.5991	9.6028	9.6064	68	4	7	11	15	19
22	9.6064	9.6100	9.6136	9.6172	9.6208	9.6243	9.6279	67	4	7	11	14	18
23	9.6279	9.6314	9.6348	9.6383	9.6417	9.6452	9.6486	66	3	7	10	14	17
24	9.6486	9.6520	9.6553	9.6587	9.6620	9.6654	9.6687	65	3	7	10	13	17
25	9.6687	9.6720	9.6752	9.6785	9.6817	9.6850	9.6882	64	3	7	10	13	16
26	9.6882	9.6914	9.6946	9.6977	9.7009	9.7040	9.7072	63	3	6	9	13	16
27	9.7072	9.7103	9.7134	9.7165	9.7196	9.7226	9.7257	62	3	6	9	12	15
28	9.7257	9.7287	9.7317	9.7348	9.7378	9.7408	9.7438	61	3	6	9	12	15
29	9.7438	9.7467	9.7497	9.7526	9.7556	9.7585	9.7614	60	3	6	9	12	15
30	**9.7614**	**9.7644**	**9.7673**	**9.7701**	**9.7730**	**9.7759**	**9.7788**	**59**	**3**	**6**	**9**	**12**	**14**
31	9.7788	9.7816	9.7845	9.7873	9.7902	9.7930	9.7958	58	3	6	9	11	14
32	9.7958	9.7986	9.8014	9.8042	9.8070	9.8097	9.8125	57	3	6	8	11	14
33	9.8125	9.8153	9.8180	9.8208	9.8235	9.8263	9.8290	56	3	5	8	11	14
34	9.8290	9.8317	9.8344	9.8371	9.8398	9.8425	9.8452	55	3	5	8	11	14
35	9.8452	9.8479	9.8506	9.8533	9.8559	9.8586	9.8613	54	3	5	8	11	13
36	9.8613	9.8639	9.8666	9.8692	9.8718	9.8745	9.8771	53	3	5	8	11	13
37	9.8771	9.8797	9.8824	9.8850	9.8876	9.8902	9.8928	52	3	5	8	10	13
38	9.8928	9.8954	9.8980	9.9006	9.9032	9.9058	9.9084	51	3	5	8	10	13
39	9.9084	9.9110	9.9135	9.9161	9.9187	9.9212	9.9238	50	3	5	8	10	13
40	**9.9238**	**9.9264**	**9.9289**	**9.9315**	**9.9341**	**9.9366**	**9.9392**	**49**	**3**	**5**	**8**	**10**	**13**
41	9.9392	9.9417	9.9443	9.9468	9.9494	9.9519	9.9544	48	3	5	8	10	13
42	9.9544	9.9570	9.9595	9.9621	9.9646	9.9671	9.9697	47	3	5	8	10	13
43	9.9697	9.9722	9.9747	9.9772	9.9798	9.9823	9.9848	46	3	5	8	10	13
44	9.9848	9.9874	9.9899	9.9924	9.9949	9.9975	10.0000	45	3	5	8	10	13
	60′	50′	40′	30′	20′	10′	0′	Degrees	1′	2′	3′	4′	5′
									Prop. parts				

Logarithmic cotangents. Read up. Subtract proportional parts.

a See note *a*, p. 46.

Table 25. Logarithmic tangents—*Continued*

Degrees	0′	10′	20′	30′	40′	50′	60′		Prop. parts 1′	2′	3′	4′	5′
45	0.0000	0.0025	0.0051	0.0076	0.0101	0.0126	0.0152	44	3	5	8	10	13
46	0.0152	0.0177	0.0202	0.0228	0.0253	0.0278	0.0303	43	3	5	8	10	1
47	0.0303	0.0329	0.0354	0.0379	0.0405	0.0430	0.0456	42	3	5	8	10	13
48	0.0456	0.0481	0.0506	0.0532	0.0557	0.0583	0.0608	41	3	5	8	10	13
49	0.0608	0.0634	0.0659	0.0685	0.0711	0.0736	0.0762	40	3	5	8	10	13
50	**0.0762**	**0.0788**	**0.0813**	**0.0839**	**0.0865**	**0.0890**	**0.0916**	**39**	**3**	**5**	**8**	**10**	**13**
51	0.0916	0.0942	0.0968	0.0994	0.1020	0.1046	0.1072	38	3	5	8	10	13
52	0.1072	0.1098	0.1124	0.1150	0.1176	0.1203	0.1229	37	3	5	8	10	13
53	0.1229	0.1255	0.1282	0.1308	0.1334	0.1361	0.1387	36	3	5	8	11	13
54	0.1387	0.1414	0.1441	0.1467	0.1494	0.1521	0.1548	35	3	5	8	11	13
55	0.1548	0.1575	0.1602	0.1629	0.1656	0.1683	0.1710	34	3	5	8	11	14
56	0.1710	0.1737	0.1765	0.1792	0.1820	0.1847	0.1875	33	3	5	8	11	14
57	0.1875	0.1903	0.1930	0.1958	0.1986	0.2014	0.2042	32	3	6	8	11	14
58	0.2042	0.2070	0.2098	0.2127	0.2155	0.2184	0.2212	31	3	6	9	11	14
59	0.2212	0.2241	0.2270	0.2299	0.2327	0.2356	0.2386	30	3	6	9	12	14
60	**0.2386**	**0.2415**	**0.2444**	**0.2474**	**0.2503**	**0.2533**	**0.2562**	**29**	**3**	**6**	**9**	**12**	**15**
61	0.2562	0.2592	0.2622	0.2652	0.2683	0.2713	0.2743	28	3	6	9	12	15
62	0.2743	0.2774	0.2804	0.2835	0.2866	0.2897	0.2928	27	3	6	9	12	15
63	0.2928	0.2960	0.2991	0.3023	0.3054	0.3086	0.3118	26	3	6	9	13	16
64	0.3118	0.3150	0.3183	0.3215	0.3248	0.3280	0.3313	25	3	7	10	13	16
65	0.3313	0.3346	0.3380	0.3413	0.3447	0.3480	0.3514	24	3	7	10	13	17
66	0.3514	0.3548	0.3583	0.3617	0.3652	0.3686	0.3721	23	3	7	10	14	17
67	0.3721	0.3757	0.3792	0.3828	0.3864	0.3900	0.3936	22	4	7	11	14	18
68	0.3936	0.3972	0.4009	0.4046	0.4083	0.4121	0.4158	21	4	7	11	15	19
69	0.4158	0.4196	0.4234	0.4273	0.4311	0.4350	0.4389	20	4	8	12	15	19
70	**0.4389**	**0.4429**	**0.4469**	**0.4509**	**0.4549**	**0.4589**	**0.4630**	**19**	**4**	**8**	**12**	**16**	**20**
71	0.4630	0.4671	0.4713	0.4755	0.4797	0.4839	0.4882	18	4	8	13	17	21
72	0.4882	0.4925	0.4969	0.5013	0.5057	0.5102	0.5147	17	4	9	13	18	22
73	0.5147	0.5192	0.5238	0.5284	0.5331	0.5378	0.5425	16	5	9	14	19	23
74	0.5425	0.5473	0.5521	0.5570	0.5619	0.5669	0.5719	15					
75	0.5719	0.5770	0.5822	0.5873	0.5926	0.5979	0.6032	14					
76	0.6032	0.6086	0.6141	0.6196	0.6252	0.6309	0.6366	13					
77	0.6366	0.6424	0.6483	0.6542	0.6603	0.6664	0.6725	12					
78	0.6725	0.6788	0.6851	0.6915	0.6980	0.7047	0.7113	11					
79	0.7113	0.7181	0.7250	0.7320	0.7391	0.7464	0.7537	10					
80	**0.7537**	**0.7611**	**0.7687**	**0.7764**	**0.7842**	**0.7922**	**0.8003**	**9**					
81	0.8003	0.8085	0.8169	0.8255	0.8342	0.8431	0.8522	8					
82	0.8522	0.8615	0.8709	0.8806	0.8904	0.9005	0.9109	7					
83	0.9109	0.9214	0.9322	0.9433	0.9547	0.9664	0.9784	6					
84	0.9784	0.9907	1.0034	1.0164	1.0299	1.0437	1.0580	5					
85	1.0580	1.0728	1.0882	1.1040	1.1205	1.1376	1.1554	4					
86	1.1554	1.1739	1.1933	1.2135	1.2348	1.2571	1.2806	3					
87	1.2806	1.3055	1.3318	1.3599	1.3899	1.4221	1.4569	2					
88	1.4569	1.4947	1.5362	1.5819	1.6331	1.6911	1.7581	1					
89	1.7581	1.8373	1.9342	2.0591	2.2352	2.5363	Infinite	0					
	60′	50′	40′	30′	20′	10′	0′	Degrees	1′	2′	3′	4′	5′

Interpolate

a

Prop. parts

Logarithmic cotangents. Read up. Subtract proportional parts.

Table 26. Exponentials e^u and e^{-}

u	e^u	e^{-u}	u	e^u	e^{-u}	u	e^u	e^{-u}	u	$\log e^u = u \log e$
.00	**1.000**	**1.000**	**.50**	**1.649**	**.6065**	**1.0**	**2.718**	**.3679**	**.01**	**0.00434**
.01	1.010	.9900	.51	1.665	.6005	1.1	3.004	.3329	.02	0.00869
.02	1.020	.9802	.52	1.682	.5945	1.2	3.320	.3012	.03	0.01303
.03	1.030	.9704	.53	1.699	.5886	1.3	3.669	.2725	.04	0.01737
.04	1.041	.9608	.54	1.716	.5827	1.4	4.055	.2466	.05	0.02171
.05	1.051	.9512	.55	1.733	.5769	1.5	4.482	.2231	.06	0.02606
.06	1.062	.9418	.56	1.751	.5712	1.6	4.953	.2019	.07	0.03040
.07	1.073	.9324	.57	1.768	.5655	1.7	5.474	.1827	.08	0.03474
.08	1.083	.9231	.58	1.786	.5599	1.8	6.050	.1653	.09	0.03909
.09	1.094	.9139	.59	1.804	.5543	1.9	6.686	.1496	.1	0.04343
.10	**1.105**	**.9048**	**.60**	**1.822**	**.5488**	**2.0**	**7.389**	**.1353**	**.2**	**0.08686**
.11	1.116	.8958	.61	1.840	.5434	2.1	8.166	.1225	.3	0.13029
.12	1.127	.8869	.62	1.859	.5379	2.2	9.025	.1108	.4	0.17372
.13	1.139	.8781	.63	1.878	.5326	2.3	9.974	.1003	.5	0.21715
.14	1.150	.8694	.64	1.896	.5273	2.4	11.02	.09072	.6	0.26058
.15	1.162	.8607	.65	1.916	.5220	2.5	12.18	.08209	.7	0.30401
.16	1.174	.8521	.66	1.935	.5169	2.6	13.46	.07427	.8	0.34744
.17	1.185	.8437	.67	1.954	.5117	2.7	14.88	.06721	.9	0.39087
.18	1.197	.8353	.68	1.974	.5066	2.8	16.44	.06081	1	0.43429
.19	1.209	.8270	.69	1.994	.5016	2.9	18.17	.05502	2	0.86859
.20	**1.221**	**.8187**	**.70**	**2.014**	**.4966**	**3.0**	**20.09**	**.04979**	**3**	**1.30288**
.21	1.234	.8106	.71	2.034	.4916	3.1	22.20	.04505	4	1.73718
.22	1.246	.8025	.72	2.054	.4868	3.2	24.53	.04076	5	2.17147
.23	1.259	.7945	.73	2.075	.4819	3.3	27.11	.03688	6	2.60577
.24	1.271	.7866	.74	2.096	.4771	3.4	29.96	.03337	7	3.04006
.25	1.284	.7788	.75	2.117	.4724	3.5	33.12	.03020	8	3.47436
.26	1.297	.7711	.76	2.138	.4677	3.6	36.60	.02732	9	3.90865
.27	1.310	.7634	.77	2.160	.4630	3.7	40.45	.02472	10	4.34294
.28	1.323	.7558	.78	2.181	.4584	3.8	44.70	.02237	20	8.68589
.29	1.336	.7483	.79	2.203	.4538	3.9	49.40	.02024	30	13.02883
.30	**1.350**	**.7408**	**.80**	**2.226**	**.4493**	**4.0**	**54.60**	**.01832**	**40**	**17.37178**
.31	1.363	.7334	.81	2.248	.4449	4.1	60.34	.01657	50	21.71472
.32	1.377	.7261	.82	2.271	.4404	4.2	66.69	.01500	60	26.05767
.33	1.391	.7189	.83	2.293	.4360	4.3	73.70	.01357	70	30.40061
.34	1.405	.7118	.84	2.316	.4317	4.4	81.45	.01228	80	34.74356
.35	1.419	.7047	.85	2.340	.4274	4.5	90.02	.01111	90	39.08650
.36	1.433	.6977	.86	2.363	.4232	4.6	99.48	.01005	$\pi/4$	0.34109
.37	1.448	.6907	.87	2.387	.4190	4.7	109.9	.00910	$\pi/2$	0.68219
.38	1.462	.6839	.88	2.411	.4148	4.8	121.5	.00823	$3\pi/4$	1.02328
.39	1.477	.6771	.89	2.435	.4107	4.9	134.3	.00745	π	1.36438
.40	**1.492**	**.6703**	**.90**	**2.460**	**.4066**	**5.0**	**148.4**	**.00674**	**$5\pi/4$**	**1.70547**
.41	1.507	.6637	.91	2.484	.4025	5.1	164.0	.00610	$3\pi/2$	2.04656
.42	1.522	.6570	.92	2.509	.3985	5.2	181.3	.00552	$7\pi/4$	2.38766
.43	1.537	.6505	.93	2.535	.3946	5.3	200.3	.00499	2π	2.72875
.44	1.553	.6440	.94	2.560	.3906	5.4	221.4	.00452	$5\pi/2$	3.41094
.45	1.568	.6376	.95	2.586	.3867	5.5	244.7	.00409	3π	4.09313
.46	1.584	.6313	.96	2.612	.3829	5.6	270.4	.00370	$7\pi/2$	4.77532
.47	1.600	.6250	.97	2.638	.3791	5.7	298.9	.00335	4π	5.45751
.48	1.616	.6188	.98	2.664	.3753	5.8	330.3	.00303	$9\pi/2$	6.13969
.49	1.632	.6126	.99	2.691	.3716	5.9	365.0	.00274	5π	6.82188

Interpolation inaccurate

Table 27. Hyperbolic functions *a*

u	Sinh u	Cosh u	Tanh u	u	Sinh u	Cosh u	Tanh u	u	Sinh u	Cosh u	Tanh u
.00	**.0000**	**1.000**	**.0000**	**.50**	**.5211**	**1.128**	**.4621**	**1.0**	**1.175**	**1.543**	**.7616**
.01	.0100	1.000	.0100	.51	.5324	1.133	.4700	1.1	1.336	1.669	.8005
.02	.0200	1.000	.0200	.52	.5438	1.138	.4777	1.2	1.509	1.811	.8337
.03	.0300	1.000	.0300	.53	.5552	1.144	.4854	1.3	1.698	1.971	.8617
.04	.0400	1.001	.0400	.54	.5666	1.149	.4930	1.4	1.904	2.151	.8854
.05	.0500	1.001	.0500	.55	.5782	1.155	.5005	1.5	2.129	2.352	.9052
.06	.0600	1.002	.0599	.56	.5897	1.161	.5080	1.6	2.376	2.577	.9217
.07	.0701	1.002	.0699	.57	.6014	1.167	.5154	1.7	2.646	2.828	.9354
.08	.0801	1.003	.0798	.58	.6131	1.173	.5227	1.8	2.942	3.107	.9468
.09	.0901	1.004	.0898	.59	.6248	1.179	.5299	1.9	3.268	3.418	.9562
.10	**.1002**	**1.005**	**.0997**	**.60**	**.6367**	**1.185**	**.5370**	**2.0**	**3.627**	**3.762**	**.9640**
.11	.1102	1.006	.1096	.61	.6485	1.192	.5441	2.1	4.022	4.144	.9705
.12	.1203	1.007	.1194	.62	.6605	1.198	.5511	2.2	4.457	4.568	.9757
.13	.1304	1.008	.1293	.63	.6725	1.205	.5581	2.3	4.937	5.037	.9801
.14	.1405	1.010	.1391	.64	.6846	1.212	.5649	2.4	5.466	5.557	.9837
.15	.1506	1.011	.1489	.65	.6967	1.219	.5717	2.5	6.050	6.132	.9866
.16	.1607	1.013	.1587	.66	.7090	1.226	.5784	2.6	6.695	6.769	.9890
.17	.1708	1.014	.1684	.67	.7213	1.233	.5850	2.7	7.406	7.473	.9910
.18	.1810	1.016	.1781	.68	.7336	1.240	.5915	2.8	8.192	8.253	.9926
.19	.1911	1.018	.1878	.69	.7461	1.248	.5980	2.9	9.060	9.115	.9940
.20	**.2013**	**1.020**	**.1974**	**.70**	**.7586**	**1.255**	**.6044**	**3.0**	**10.02**	**10.07**	**.9951**
.21	.2115	1.022	.2070	.71	.7712	1.263	.6107	3.1	11.08	11.12	.9960
.22	.2218	1.024	.2165	.72	.7838	1.271	.6169	3.2	12.25	12.29	.9967
.23	.2320	1.027	.2260	.73	.7966	1.278	.6231	3.3	13.54	13.57	.9973
.24	.2423	1.029	.2355	.74	.8094	1.287	.6291	3.4	14.97	15.00	.9978
.25	.2526	1.031	.2449	.75	.8223	1.295	.6352	3.5	16.54	16.57	.9982
.26	.2629	1.034	.2543	.76	.8353	1.303	.6411	3.6	18.29	18.31	.9985
.27	.2733	1.037	.2636	.77	.8484	1.311	.6469	3.7	20.21	20.24	.9988
.28	.2837	1.039	.2729	.78	.8615	1.320	.6527	3.8	22.34	22.36	.9990
.29	.2941	1.042	.2821	.79	.8748	1.329	.6584	3.9	24.69	24.71	.9992
.30	**.3045**	**1.045**	**.2913**	**.80**	**.8881**	**1.337**	**.6640**	**4.0**	**27.29**	**27.31**	**.9993**
.31	.3150	1.048	.3004	.81	.9015	1.346	.6696	4.1	30.16	30.18	.9995
.32	.3255	1.052	.3095	.82	.9150	1.355	.6751	4.2	33.34	33.35	.9996
.33	.3360	1.055	.3185	.83	.9286	1.365	.6805	4.3	36.84	36.86	.9996
.34	.3466	1.058	.3275	.84	.9423	1.374	.6858	4.4	40.72	40.73	.9997
.35	.3572	1.062	.3364	.85	.9561	1.384	.6911	4.5	45.00	45.01	.9998
.36	.3678	1.066	.3452	.86	.9700	1.393	.6963	4.6	49.74	49.75	.9998
.37	.3785	1.069	.3540	.87	.9840	1.403	.7014	4.7	54.97	54.98	.9998
.38	.3892	1.073	.3627	.88	.9981	1.413	.7064	4.8	60.75	60.76	.9999
.39	.4000	1.077	.3714	.89	1.012	1.423	.7114	4.9	67.14	67.15	.9999
.40	**.4108**	**1.081**	**.3800**	**.90**	**1.027**	**1.433**	**.7163**	**5.0**	**74.20**	**74.21**	**.9999**
.41	.4216	1.085	.3885	.91	1.041	1.443	.7211	5.1	82.01	82.01	.9999
.42	.4325	1.090	.3969	.92	1.055	1.454	.7259	5.2	90.63	90.64	.9999
.43	.4434	1.094	.4053	.93	1.070	1.465	.7306	5.3	100.17	100.17	1.0000
.44	.4543	1.098	.4136	.94	1.085	1.475	.7352	5.4	110.70	110.71	1.0000
.45	.4653	1.103	.4219	.95	1.099	1.486	.7398	5.5	122.34	122.35	1.0000
.46	.4764	1.108	.4301	.96	1.114	1.497	.7443	5.6	135.21	135.22	1.0000
.47	.4875	1.112	.4382	.97	1.129	1.509	.7487	5.7	149.43	149.44	1.0000
.48	.4986	1.117	.4462	.98	1.145	1.520	.7531	5.8	165.15	165.15	1.0000
.49	.5098	1.122	.4542	.99	1.160	1.531	.7574	5.9	182.52	182.52	1.0000

a Sinh $u = \frac{1}{2}(e^u - e^{-u})$, cosh $u = \frac{1}{2}(e^u + e^{-u})$, tanh $u = \sinh u/\cosh u$. Other hyperbolic functions are sech $u = 1/\cosh u$, cosech $u = 1/\sinh u$, coth $u = 1/\tanh u$. Other relations are $\cosh^2 u - \sinh^2 u = 1$, $\operatorname{sech}^2 u = 1 - \tanh^2 u$. Avoid interpolation for $u > 1$.

Trigonometric and hyperbolic functions satisfy the equations $\sin ui = i \sinh u$, $\cos ui = \cosh u$, $(i = \sqrt{-1})$, see Sec. 21, Art. 10.

Table 28. Napierian (natural) logarithms. Base $e = 2.71828$

N	0	1	2	3	4	5	6	7	8	9	Prop. parts 1	2	3	4	5
1.0	**0.0000**	**0.0100**	**0.0198**	**0.0296**	**0.0392**	**0.0488**	**0.0583**	**0.0677**	**0.0770**	**0.0862**					
1.1	0.0953	0.1044	0.1133	0.1222	0.1310	0.1398	0.1484	0.1570	0.1655	0.1740					
1.2	0.1823	0.1906	0.1989	0.2070	0.2151	0.2231	0.2311	0.2390	0.2469	0.2546					
1.3	0.2624	0.2700	0.2776	0.2852	0.2927	0.3001	0.3075	0.3148	0.3221	0.3293					
1.4	0.3365	0.3436	0.3507	0.3577	0.3646	0.3716	0.3784	0.3853	0.3920	0.3988					
1.5	0.4055	0.4121	0.4187	0.4253	0.4318	0.4383	0.4447	0.4511	0.4574	0.4637					
1.6	0.4700	0.4762	0.4824	0.4886	0.4947	0.5008	0.5068	0.5128	0.5188	0.5247					
1.7	0.5306	0.5365	0.5423	0.5481	0.5539	0.5596	0.5653	0.5710	0.5766	0.5822					
1.8	0.5878	0.5933	0.5988	0.6043	0.6098	0.6152	0.6206	0.6259	0.6313	0.6366					
1.9	0.6419	0.6471	0.6523	0.6575	0.6627	0.6678	0.6729	0.6780	0.6831	0.6881					
2.0	**0.6931**	**0.6981**	**0.7031**	**0.7080**	**0.7129**	**0.7178**	**0.7227**	**0.7275**	**0.7324**	**0.7372**					
2.1	0.7419	0.7467	0.7514	0.7561	0.7608	0.7655	0.7701	0.7747	0.7793	0.7839	5	9	14	19	23
2.2	0.7885	0.7930	0.7975	0.8020	0.8065	0.8109	0.8154	0.8198	0.8242	0.8286	4	9	13	18	22
2.3	0.8329	0.8372	0.8416	0.8459	0.8502	0.8544	0.8587	0.8629	0.8671	0.8713	4	9	13	17	21
2.4	0.8755	0.8796	0.8838	0.8879	0.8920	0.8961	0.9002	0.9042	0.9083	0.9123	4	8	12	16	20
2.5	0.9163	0.9203	0.9243	0.9282	0.9322	0.9361	0.9400	0.9439	0.9478	0.9517	4	8	12	16	20
2.6	0.9555	0.9594	0.9632	0.9670	0.9708	0.9746	0.9783	0.9821	0.9858	0.9895	4	8	11	15	19
2.7	0.9933	0.9969	1.0006	1.0043	1.0080	1.0116	1.0152	1.0188	1.0225	1.0260	4	7	11	15	18
2.8	1.0296	1.0332	1.0367	1.0403	1.0438	1.0473	1.0508	1.0543	1.0578	1.0613	4	7	11	14	18
2.9	1.0647	1.0682	1.0716	1.0750	1.0784	1.0818	1.0852	1.0886	1.0919	1.0953	3	7	10	14	17
3.0	**1.0986**	**1.1019**	**1.1053**	**1.1086**	**1.1119**	**1.1151**	**1.1184**	**1.1217**	**1.1249**	**1.1282**	**3**	**7**	**10**	**13**	**16**
3.1	1.1314	1.1346	1.1378	1.1410	1.1442	1.1474	1.1506	1.1537	1.1569	1.1600	3	6	10	13	16
3.2	1.1632	1.1663	1.1694	1.1725	1.1756	1.1787	1.1817	1.1848	1.1878	1.1909	3	6	9	12	15
3.3	1.1939	1.1969	1.2000	1.2030	1.2060	1.2090	1.2119	1.2149	1.2179	1.2208	3	6	9	12	15
3.4	1.2238	1.2267	1.2296	1.2326	1.2355	1.2384	1.2413	1.2442	1.2470	1.2499	3	6	9	12	14
3.5	1.2528	1.2556	1.2585	1.2613	1.2641	1.2669	1.2698	1.2726	1.2754	1.2782	3	6	8	11	14
3.6	1.2809	1.2837	1.2865	1.2892	1.2920	1.2947	1.2975	1.3002	1.3029	1.3056	3	5	8	11	14
3.7	1.3083	1.3110	1.3137	1.3164	1.3191	1.3218	1.3244	1.3271	1.3297	1.3324	3	5	8	11	13
3.8	1.3350	1.3376	1.3403	1.3429	1.3455	1.3481	1.3507	1.3533	1.3558	1.3584	3	5	8	10	13
3.9	1.3610	1.3635	1.3661	1.3686	1.3712	1.3737	1.3762	1.3788	1.3813	1.3838	3	5	8	10	13
4.0	**1.3863**	**1.3888**	**1.3913**	**1.3938**	**1.3962**	**1.3987**	**1.4012**	**1.4036**	**1.4061**	**1.4085**	**2**	**5**	**7**	**10**	**12**
4.1	1.4110	1.4134	1.4159	1.4183	1.4207	1.4231	1.4255	1.4279	1.4303	1.4327	2	5	7	10	12
4.2	1.4351	1.4375	1.4398	1.4422	1.4446	1.4469	1.4493	1.4516	1.4540	1.4563	2	5	7	9	12
4.3	1.4586	1.4609	1.4633	1.4656	1.4679	1.4702	1.4725	1.4748	1.4770	1.4793	2	5	7	9	11
4.4	1.4816	1.4839	1.4861	1.4884	1.4907	1.4929	1.4951	1.4974	1.4996	1.5019	2	4	7	9	11
4.5	1.5041	1.5063	1.5085	1.5107	1.5129	1.5151	1.5173	1.5195	1.5217	1.5239	2	4	7	9	11
4.6	1.5261	1.5282	1.5304	1.5326	1.5347	1.5369	1.5390	1.5412	1.5433	1.5454	2	4	6	9	11
4.7	1.5476	1.5497	1.5518	1.5539	1.5560	1.5581	1.5602	1.5623	1.5644	1.5665	2	4	6	8	11
4.8	1.5686	1.5707	1.5728	1.5748	1.5769	1.5790	1.5810	1.5831	1.5851	1.5872	2	4	6	8	10
4.9	1.5892	1.5913	1.5933	1.5953	1.5974	1.5994	1.6014	1.6034	1.6054	1.6074	2	4	6	8	10
5.0	**1.6094**	**1.6114**	**1.6134**	**1.6154**	**1.6174**	**1.6194**	**1.6214**	**1.6233**	**1.6253**	**1.6273**	**2**	**4**	**6**	**8**	**10**
5.1	1.6292	1.6312	1.6332	1.6351	1.6371	1.6390	1.6409	1.6429	1.6448	1.6467	2	4	6	8	10
5.2	1.6487	1.6506	1.6525	1.6544	1.6563	1.6582	1.6601	1.6620	1.6639	1.6658	2	4	6	8	10
5.3	1.6677	1.6696	1.6715	1.6734	1.6752	1.6771	1.6790	1.6808	1.6827	1.6845	2	4	6	7	9
5.4	1.6864	1.6882	1.6901	1.6919	1.6938	1.6956	1.6974	1.6993	1.7011	1.7029	2	4	6	7	9
5.5	1.7047	1.7066	1.7084	1.7102	1.7120	1.7138	1.7156	1.7174	1.7192	1.7210	2	4	5	7	9
5.6	1.7228	1.7246	1.7263	1.7281	1.7299	1.7317	1.7334	1.7352	1.7370	1.7387	2	4	5	7	9
5.7	1.7405	1.7422	1.7440	1.7457	1.7475	1.7492	1.7509	1.7527	1.7544	1.7561	2	3	5	7	9
5.8	1.7579	1.7596	1.7613	1.7630	1.7647	1.7664	1.7681	1.7699	1.7716	1.7733	2	3	5	7	9
5.9	1.7750	1.7766	1.7783	1.7800	1.7817	1.7834	1.7851	1.7867	1.7884	1.7901	2	3	5	7	8
N	0	1	2	3	4	5	6	7	8	9	1	2	3	4	5

Interpolate

Prop. parts

Table 28. Napierian logarithms—*Continued*

N	0	1	2	3	4	5	6	7	8	9	Prop. parts				
											1	2	3	4	5
6.0	**1.7918**	**1.7934**	**1.7951**	**1.7967**	**1.7984**	**1.8001**	**1.8017**	**1.8034**	**1.8050**	**1.8066**	**2**	**3**	**5**	**7**	**8**
6.1	1.8083	1.8099	1.8116	1.8132	1.8148	1.8165	1.8181	1.8197	1.8213	1.8229	2	3	5	7	8
6.2	1.8245	1.8262	1.8278	1.8294	1.8310	1.8326	1.8342	1.8358	1.8374	1.8390	2	3	5	6	8
6.3	1.8405	1.8421	1.8437	1.8453	1.8469	1.8485	1.8500	1.8516	1.8532	1.8547	2	3	5	6	8
6.4	1.8563	1.8579	1.8594	1.8610	1.8625	1.8641	1.8656	1.8672	1.8687	1.8703	2	3	5	6	8
6.5	1.8718	1.8733	1.8749	1.8764	1.8779	1.8795	1.8810	1.8825	1.8840	1.8856	2	3	5	6	8
6.6	1.8871	1.8886	1.8901	1.8916	1.8931	1.8946	1.8961	1.8976	1.8991	1.9006	2	3	5	6	8
6.7	1.9021	1.9036	1.9051	1.9066	1.9081	1.9095	1.9110	1.9125	1.9140	1.9155	1	3	4	6	7
6.8	1.9169	1.9184	1.9199	1.9213	1.9228	1.9242	1.9257	1.9272	1.9286	1.9301	1	3	4	6	7
6.9	1.9315	1.9330	1.9344	1.9359	1.9373	1.9387	1.9402	1.9416	1.9430	1.9445	1	3	4	6	7
7.0	**1.9459**	**1.9473**	**1.9488**	**1.9502**	**1.9516**	**1.9530**	**1.9544**	**1.9559**	**1.9573**	**1.9587**	**1**	**3**	**4**	**6**	**7**
7.1	1.9601	1.9615	1.9629	1.9643	1.9657	1.9671	1.9685	1.9699	1.9713	1.9727	1	3	4	6	7
7.2	1.9741	1.9755	1.9769	1.9782	1.9796	1.9810	1.9824	1.9838	1.9851	1.9865	1	3	4	6	7
7.3	1.9879	1.9892	1.9906	1.9920	1.9933	1.9947	1.9961	1.9974	1.9988	2.0001	1	3	4	5	7
7.4	2.0015	2.0028	2.0042	2.0055	2.0069	2.0082	2.0096	2.0109	2.0122	2.0136	1	3	4	5	7
7.5	2.0149	2.0162	2.0176	2.0189	2.0202	2.0215	2.0229	2.0242	2.0255	2.0268	1	3	4	5	7
7.6	2.0281	2.0295	2.0308	2.0321	2.0334	2.0347	2.0360	2.0373	2.0386	2.0399	1	3	4	5	7
7.7	2.0412	2.0425	2.0438	2.0451	2.0464	2.0477	2.0490	2.0503	2.0516	2.0528	1	3	4	5	6
7.8	2.0541	2.0554	2.0567	2.0580	2.0592	2.0605	2.0618	2.0631	2.0643	2.0656	1	3	4	5	6
7.9	2.0669	2.0681	2.0694	2.0707	2.0719	2.0732	2.0744	2.0757	2.0769	2.0782	1	3	4	5	6
8.0	**2.0794**	**2.0807**	**2.0819**	**2.0832**	**2.0844**	**2.0857**	**2.0869**	**2.0882**	**2.0894**	**2.0906**	**1**	**2**	**4**	**5**	**6**
8.1	2.0919	2.0931	2.0943	2.0956	2.0968	2.0980	2.0992	2.1005	2.1017	2.1029	1	2	4	5	6
8.2	2.1041	2.1054	2.1066	2.1078	2.1090	2.1102	2.1114	2.1126	2.1138	2.1150	1	2	4	5	6
8.3	2.1163	2.1175	2.1187	2.1199	2.1211	2.1223	2.1235	2.1247	2.1258	2.1270	1	2	4	5	6
8.4	2.1282	2.1294	2.1306	2.1318	2.1330	2.1342	2.1353	2.1365	2.1377	2.1389	1	2	4	5	6
8.5	2.1401	2.1412	2.1424	2.1436	2.1448	2.1459	2.1471	2.1483	2.1494	2.1506	1	2	4	5	6
8.6	2.1518	2.1529	2.1541	2.1552	2.1564	2.1576	2.1587	2.1599	2.1610	2.1622	1	2	3	5	6
8.7	2.1633	2.1645	2.1656	2.1668	2.1679	2.1691	2.1702	2.1713	2.1725	2.1736	1	2	3	5	6
8.8	2.1748	2.1759	2.1770	2.1782	2.1793	2.1804	2.1815	2.1827	2.1838	2.1849	1	2	3	5	6
8.9	2.1861	2.1872	2.1883	2.1894	2.1905	2.1917	2.1928	2.1939	2.1950	2.1961	1	2	3	4	6
9.0	**2.1972**	**2.1983**	**2.1994**	**2.2006**	**2.2017**	**2.2028**	**2.2039**	**2.2050**	**2.2061**	**2.2072**	**1**	**2**	**3**	**4**	**6**
9.1	2.2083	2.2094	2.2105	2.2116	2.2127	2.2138	2.2148	2.2159	2.2170	2.2181	1	2	3	4	5
9.2	2.2192	2.2203	2.2214	2.2225	2.2235	2.2246	2.2257	2.2268	2.2279	2.2289	1	2	3	4	5
9.3	2.2300	2.2311	2.2322	2.2332	2.2343	2.2354	2.2364	2.2375	2.2386	2.2396	1	2	3	4	5
9.4	2.2407	2.2418	2.2428	2.2439	2.2450	2.2460	2.2471	2.2481	2.2492	2.2502	1	2	3	4	5
9.5	2.2513	2.2523	2.2534	2.2544	2.2555	2.2565	2.2576	2.2586	2.2597	2.2607	1	2	3	4	5
9.6	2.2618	2.2628	2.2638	2.2649	2.2659	2.2670	2.2680	2.2690	2.2701	2.2711	1	2	3	4	5
9.7	2.2721	2.2732	2.2742	2.2752	2.2762	2.2773	2.2783	2.2793	2.2803	2.2814	1	2	3	4	5
9.8	2.2824	2.2834	2.2844	2.2854	2.2865	2.2875	2.2885	2.2895	2.2905	2.2915	1	2	3	4	5
9.9	2.2925	2.2935	2.2946	2.2956	2.2966	2.2976	2.2986	2.2996	2.3006	2.3016	1	2	3	4	5

Table 29. Napierian logarithms of powers of 10

u	Nap. log. 10^u	u	Nap. log. 10^u	u	Nap. log. 10^u	u	Nap. log. 10^u
0	0.000 000	2.5	5.756 463	5.0	11.512 925	7.5	17.269 388
0.5	1.151 293	3.0	6.907 755	5.5	12.664 218	8.0	18.420 681
1.0	2.302 585	3.5	8.059 048	6.0	13.815 511	8.5	19.571 973
1.5	3.453 878	4.0	9.210 340	6.5	14.966 803	9.0	20.723 266
2.0	4.605 170	4.5	10.361 633	7.0	16.118 096	9.5	21.874 558

Table 30. Compound interest. Amount of one dollar

Yr.	2 1/2%	3%	3 1/2%	4%	4 1/2%	5%	6%	8%	10%
1	1.02500	1.03000	1.03500	1.04000	1.04500	1.05000	1.06000	1.08000	1.10000
2	1.05062	1.06090	1.07122	1.08160	1.09203	1.10250	1.12360	1.16640	1.21000
3	1.07689	1.09273	1.10872	1.12486	1.14117	1.15763	1.19102	1.25971	1.33100
4	1.10381	1.12551	1.14752	1.16986	1.19252	1.21551	1.26248	1.36049	1.46410
5	1.13141	1.15927	1.18769	1.21665	1.24618	1.27628	1.33823	1.46933	1.61051
6	1.15969	1.19405	1.22926	1.26532	1.30226	1.34010	1.41852	1.58687	1.77156
7	1.18869	1.22987	1.27228	1.31593	1.36086	1.40710	1.50363	1.71382	1.94872
8	1.21840	1.26677	1.31681	1.36857	1.42210	1.47746	1.59385	1.85093	2.14359
9	1.24886	1.30477	1.36290	1.42331	1.48610	1.55133	1.68948	1.99900	2.35795
10	**1.28008**	**1.34392**	**1.41060**	**1.48024**	**1.55297**	**1.62889**	**1.79085**	**2.15892**	**2.59374**
11	1.31209	1.38423	1.45997	1.53945	1.62285	1.71034	1.89830	2.33164	2.85312
12	1.34489	1.42576	1.51107	1.60103	1.69588	1.79586	2.01220	2.51817	3.13843
13	1.37851	1.46853	1.56396	1.66507	1.77220	1.88565	2.13293	2.71962	3.45227
14	1.41297	1.51259	1.61869	1.73168	1.85194	1.97993	2.26090	2.93719	3.79750
15	1.44830	1.55797	1.67535	1.80094	1.93528	2.07893	2.39656	3.17217	4.17725
16	1.48451	1.60471	1.73399	1.87298	2.02237	2.18287	2.54035	3.42594	4.59497
17	1.52162	1.65285	1.79467	1.94790	2.11338	2.29202	2.69277	3.70002	5.05447
18	1.55966	1.70243	1.85749	2.02582	2.20848	2.40662	2.85434	3.99602	5.55992
19	1.59865	1.75351	1.92250	2.10685	2.30786	2.52695	3.02560	4.31570	6.11591
20	**1.63862**	**1.80611**	**1.98979**	**2.19112**	**2.41171**	**2.65330**	**3.20714**	**4.66096**	**6.72750**
21	1.67958	1.86029	2.05943	2.27877	2.52024	2.78596	3.39956	5.03383	7.40025
22	1.72157	1.91610	2.13151	2.36992	2.63365	2.92526	3.60354	5.43654	8.14027
23	1.76461	1.97359	2.20611	2.46472	2.75217	3.07152	3.81975	5.87146	8.95430
24	1.80873	2.03279	2.28333	2.56330	2.87601	3.22510	4.04893	6.34118	9.84973
25	1.85394	2.09378	2.36324	2.66584	3.00543	3.38635	4.29187	6.84848	10.8347
26	1.90029	2.15659	2.44596	2.77247	3.14068	3.55567	4.54938	7.39635	11.9182
27	1.94780	2.22129	2.53157	2.88337	3.28201	3.73346	4.82235	7.98806	13.1100
28	1.99650	2.28793	2.62017	2.99870	3.42970	3.92013	5.11169	8.62711	14.4210
29	2.04640	2.35657	2.71188	3.11865	3.58404	4.11614	5.41839	9.31727	15.8631
30	**2.09757**	**2.42726**	**2.80679**	**3.24340**	**3.74532**	**4.32194**	**5.74349**	**10.0627**	**17.4494**
31	2.15000	2.50008	2.90503	3.37313	3.91386	4.53804	6.08810	10.8677	19.1943
32	2.20376	2.57508	3.00671	3.50806	4.08998	4.76494	6.45339	11.7371	21.1138
33	2.25885	2.65234	3.11194	3.64838	4.27403	5.00319	6.84059	12.6701	23.2252
34	2.31532	2.73191	3.22086	3.79432	4.46636	5.25335	7.25103	13.6901	25.5477
35	2.37321	2.81386	3.33359	3.94609	4.66735	5.51602	7.68609	14.7853	28.1024
36	2.43254	2.89828	3.45027	4.10393	4.87738	5.79182	8.14725	15.9682	30.9127
37	2.49335	2.98523	3.57103	4.26809	5.09686	6.08141	8.63609	17.2456	34.0040
38	2.55568	3.07478	3.69601	4.43881	5.32622	6.38548	9.15425	18.6253	37.4043
39	2.61957	3.16703	3.82537	4.61637	5.56590	6.70475	9.70351	20.1153	41.1448
40	**2.68506**	**3.26204**	**3.95926**	**4.80102**	**5.81636**	**7.03999**	**10.2857**	**21.7245**	**45.2593**
41	2.75219	3.35990	4.09783	4.99306	6.07810	7.39199	10.9029	23.4625	49.7852
42	2.82100	3.46070	4.24126	5.19278	6.35161	7.76159	11.5570	25.3395	54.7637
43	2.89152	3.56452	4.38970	5.40050	6.63744	8.14967	12.2505	27.3666	60.2401
44	2.96381	3.67145	4.54334	5.61652	6.93612	8.55715	12.9855	29.5560	66.2641
45	3.03790	3.78160	4.70236	5.84118	7.24825	8.98501	13.7646	31.9205	72.8905
46	3.11385	3.89504	4.86694	6.07482	7.57442	9.43426	14.5905	34.4741	80.1795
47	3.19169	4.01190	5.03728	6.31782	7.91527	9.90597	15.4659	37.2320	88.1975
48	3.27149	4.13225	5.21359	6.57053	8.27145	10.4013	16.3939	40.2106	97.0172
49	3.35328	4.25622	5.39606	6.83335	8.64367	10.9213	17.3775	43.4274	106.719
50	**3.43711**	**4.38391**	**5.58493**	**7.10668**	**9.03264**	**11.4674**	**18.4202**	**46.9016**	**117.391**
51	3.52304	4.51542	5.78040	7.39095	9.43910	12.0408	19.5254	50.6537	129.130
52	3.61111	4.65089	5.98271	7.68659	9.86386	12.6428	20.6969	54.7060	142.043
53	3.70139	4.79041	6.19211	7.99405	10.3077	13.2750	21.9387	59.0825	156.247
54	3.79392	4.93412	6.40883	8.31381	10.7716	13.9387	23.2550	63.8091	171.872
55	3.88877	5.08215	6.63314	8.64637	11.2563	14.6356	24.6503	68.9139	189.059
56	3.98599	5.23461	6.86530	8.99222	11.7628	15.3674	26.1293	74.4270	207.965
57	4.08564	5.39165	7.10559	9.35191	12.2922	16.1358	27.6971	80.3811	228.762
58	4.18778	5.55340	7.35428	9.72599	12.8453	16.9426	29.3589	86.8116	251.638
59	4.29248	5.72000	7.61168	10.1150	13.4234	17.7897	31.1205	93.7565	276.801
60	**4.39979**	**5.89160**	**7.87809**	**10.5196**	**14.0274**	**18.6792**	**32.9877**	**101.257**	**304.482**

Table 31. Compound discount. Present value of one dollar

Yr.	2½%	3%	3½%	4%	4½%	5%	6%	8%	10%
1	.97561	.97087	.96618	.96154	.95694	.95238	.94340	.92593	.90909
2	.95181	.94260	.93351	.92456	.91573	.90703	.89000	.85734	.82645
3	.92860	.91514	.90194	.88900	.87630	.86384	.83962	.79383	.75131
4	.90595	.88849	.87144	.85480	.83856	.82270	.79209	.73503	.68301
5	.88385	.86261	.84197	.82193	.80245	.78353	.74726	.68058	.62092
6	.86230	.83748	.81350	.79031	.76790	.74622	.70496	.63017	.56447
7	.84127	.81309	.78599	.75992	.73483	.71068	.66506	.58349	.51316
8	.82075	.78941	.75941	.73069	.70319	.67684	.62741	.54027	.46651
9	.80073	.76642	.73373	.70259	.67290	.64461	.59190	.50025	.42410
10	**.78120**	**.74409**	**.70892**	**.67556**	**.64393**	**.61391**	**.55839**	**.46319**	**.38554**
11	.76214	.72242	.68495	.64958	.61620	.58468	.52679	.42888	.35049
12	.74356	.70138	.66178	.62460	.58966	.55684	.49697	.39711	.31863
13	.72542	.68095	.63940	.60057	.56427	.53032	.46884	.36770	.28966
14	.70773	.66112	.61778	.57748	.53997	.50507	.44230	.34046	.26333
15	.69047	.64186	.59689	.55526	.51672	.48102	.41727	.31524	.23939
16	.67363	.62317	.57671	.53391	.49447	.45811	.39365	.29189	.21763
17	.65720	.60502	.55720	.51337	.47318	.43630	.37136	.27027	.19784
18	.64117	.58739	.53836	.49363	.45280	.41552	.35034	.25025	.17986
19	.62553	.57029	.52016	.47464	.43330	.39573	.33051	.23171	.16351
20	**.61027**	**.55368**	**.50257**	**.45639**	**.41464**	**.37689**	**.31180**	**.21455**	**.14864**
21	.59539	.53755	.48557	.43883	.39679	.35894	.29416	.19866	.13513
22	.58086	.52189	.46915	.42196	.37970	.34185	.27751	.18394	.12285
23	.56670	.50669	.45329	.40573	.36335	.32557	.26180	.17032	.11168
24	.55288	.49193	.43796	.39012	.34770	.31007	.24698	.15770	.10153
25	.53939	.47761	.42315	.37512	.33273	.29530	.23300	.14602	.09230
26	.52623	.46369	.40884	.36069	.31840	.28124	.21981	.13520	.08391
27	.51340	.45019	.39501	.34682	.30469	.26785	.20737	.12519	.07628
28	.50088	.43708	.38165	.33348	.29157	.25509	.19563	.11591	.06934
29	.48866	.42435	.36875	.32065	.27901	.24295	.18456	.10733	.06304
30	**.47674**	**.41199**	**.35628**	**.30832**	**.26700**	**.23138**	**.17411**	**.09938**	**.05731**
31	.46511	.39999	.34423	.29646	.25550	.22036	.16425	.09202	.05210
32	.45377	.38834	.33259	.28506	.24450	.20987	.15496	.08520	.04736
33	.44270	.37703	.32134	.27409	.23397	.19987	.14619	.07889	.04306
34	.43191	.36604	.31048	.26355	.22390	.19035	.13791	.07305	.03914
35	.42137	.35538	.29998	.25342	.21425	.18129	.13011	.06763	.03558
36	.41109	.34503	.28983	.24367	.20503	.17266	.12274	.06262	.03235
37	.40107	.33498	.28003	.23430	.19620	.16444	.11579	.05799	.02941
38	.39128	.32523	.27056	.22529	.18775	.15661	.10924	.05369	.02673
39	.38174	.31575	.26141	.21662	.17967	.14915	.10306	.04971	.02430
40	**.37243**	**.30656**	**.25257**	**.20829**	**.17193**	**.14205**	**.09722**	**.04603**	**.02209**
41	.36335	.29763	.24403	.20028	.16453	.13528	.09172	.04262	.02009
42	.35448	.28896	.23578	.19257	.15744	.12884	.08653	.03946	.01826
43	.34584	.28054	.22781	.18517	.15066	.12270	.08163	.03654	.01660
44	.33740	.27237	.22010	.17805	.14417	.11686	.07701	.03383	.01509
45	.32917	.26444	.21266	.17120	.13796	.11130	.07265	.03133	.01372
46	.32115	.25674	.20547	.16461	.13202	.10600	.06854	.02901	.01247
47	.31331	.24926	.19852	.15828	.12634	.10095	.06466	.02686	.01134
48	.30567	.24200	.19181	.15219	.12090	.09614	.06100	.02487	.01031
49	.29822	.23495	.18532	.14634	.11569	.09156	.05755	.02303	.00937
50	**.29094**	**.22811**	**.17905**	**.14071**	**.11071**	**.08720**	**.05429**	**.02132**	**.00852**
51	.28385	.22146	.17300	.13530	.10594	.08305	.05122	.01974	.00774
52	.27699	.21501	.16714	.13010	.10138	.07910	.04832	.01828	.00704
53	.27017	.20875	.16150	.12509	.09701	.07533	.04558	.01693	.00640
54	.26358	.20267	.15603	.12028	.09284	.07174	.04300	.01567	.00582
55	.25715	.19677	.15076	.11566	.08884	.06833	.04057	.01451	.00529
56	.25088	.19104	.14566	.11121	.08501	.06507	.03827	.01344	.00481
57	.24476	.18547	.14073	.10693	.08135	.06197	.03610	.01244	.00437
58	.23879	.18007	.13598	.10282	.07785	.05902	.03406	.01152	.00397
59	.23296	.17483	.13138	.09886	.07450	.05621	.03213	.01067	.00361
60	**.22728**	**.16973**	**.12693**	**.09506**	**.07129**	**.05354**	**.03031**	**.00988**	**.00328**

Table 32. Annuities. Amount of one dollar per annum

Yr.	2 1/2%	3%	3 1/2%	4%	4 1/2%	5%	6%	7%	8%
1	1.00000	1.00000	1.00000	1.00000	1.00000	1.00000	1.00000	1.00000	1.00000
2	2.02500	2.03000	2.03500	2.04000	2.04500	2.05000	2.06000	2.07000	2.08000
3	3.07562	3.09090	3.10623	3.12160	3.13702	3.15250	3.18360	3.21490	3.24640
4	4.15252	4.18363	4.21494	4.24646	4.27819	4.31013	4.37462	4.43994	4.50611
5	5.25633	5.30914	5.36247	5.41632	5.47071	5.52563	5.63709	5.75074	5.86660
6	6.38774	6.46841	6.55015	6.63298	6.71689	6.80191	6.97532	7.15329	7.33593
7	7.54743	7.66246	7.77941	7.89829	8.01915	8.14201	8.39384	8.65402	8.92280
8	8.73612	8.89234	9.05169	9.21423	9.38001	9.54911	9.89747	10.2598	10.6366
9	9.95452	10.1591	10.3685	10.5828	10.8021	11.0266	11.4913	11.9780	12.4876
10	**11.2034**	**11.4639**	**11.7314**	**12.0061**	**12.2882**	**12.5779**	**13.1808**	**13.8165**	**14.4866**
11	12.4835	12.8078	13.1420	13.4864	13.8412	14.2068	14.9716	15.7836	16.6455
12	13.7956	14.1920	14.6020	15.0258	15.4640	15.9171	16.8699	17.8885	18.9771
13	15.1404	15.6178	16.1130	16.6268	17.1599	17.7130	18.8821	20.1406	21.4953
14	16.5190	17.0863	17.6770	18.2919	18.9321	19.5986	21.0151	22.5505	24.2149
15	17.9319	18.5989	19.2957	20.0236	20.7840	21.5786	23.2760	25.1290	27.1521
16	19.3802	20.1569	20.9710	21.8245	22.7193	23.6575	25.6725	27.8881	30.3243
17	20.8647	21.7616	22.7050	23.6975	24.7417	25.8404	28.2129	30.8402	33.7502
18	22.3864	23.4144	24.4997	25.6454	26.8551	28.1324	30.9057	33.9990	37.4502
19	23.9460	25.1169	26.3572	27.6712	29.0636	30.5390	33.7600	37.3790	41.4463
20	**25.5447**	**26.8704**	**28.2797**	**29.7781**	**31.3714**	**33.0660**	**36.7856**	**40.9955**	**45.7620**
21	27.1833	28.6765	30.2695	31.9692	33.7831	35.7193	39.9927	44.8652	50.4229
22	28.8629	30.5368	32.3289	34.2480	36.3034	38.5052	43.3923	49.0057	55.4568
23	30.5844	32.4529	34.4604	36.6179	38.9370	41.4305	46.9958	53.4361	60.8933
24	32.3490	34.4265	36.6665	39.0826	41.6892	44.5020	50.8156	58.1767	66.7648
25	34.1578	36.4593	38.9499	41.6459	44.5652	47.7271	54.8645	63.2490	73.1059
26	36.0117	38.5530	41.3131	44.3117	47.5706	51.1135	59.1564	68.6765	79.9544
27	37.9120	40.7096	43.7591	47.0842	50.7113	54.6691	63.7058	74.4838	87.3508
28	39.8598	42.9309	46.2906	49.9676	53.9933	58.4026	68.5281	80.6977	95.3388
29	41.8563	45.2189	48.9108	52.9663	57.4230	62.3227	73.6398	87.3465	103.966
30	**43.9027**	**47.5754**	**51.6227**	**56.0849**	**61.0071**	**66.4389**	**79.0582**	**94.4608**	**113.283**
31	46.0003	50.0027	54.4295	59.3283	64.7524	70.7608	84.8017	102.073	123.346
32	48.1503	52.5028	57.3345	62.7015	68.6662	75.2988	90.8898	110.218	134.214
33	50.3540	55.0778	60.3412	66.2095	72.7562	80.0638	97.3432	118.933	145.951
34	52.6129	57.7302	63.4532	69.8579	77.0303	85.0670	104.184	128.259	158.627
35	54.9282	60.4621	66.6740	73.6522	81.4966	90.3203	111.435	138.237	172.317
36	57.3014	63.2759	70.0076	77.5983	86.1640	95.8363	119.121	148.913	187.102
37	59.7340	66.1742	73.4579	81.7023	91.0413	101.628	127.268	160.337	203.070
38	62.2273	69.1595	77.0289	85.9703	96.1382	107.710	135.904	172.561	220.316
39	64.7830	72.2342	80.7249	90.4092	101.464	114.095	145.058	185.640	238.941
40	**67.4026**	**75.4013**	**84.5503**	**95.0255**	**107.030**	**120.800**	**154.762**	**199.635**	**259.057**
41	70.0876	78.6633	88.5095	99.8265	112.847	127.840	165.048	214.610	280.781
42	72.8398	82.0232	92.6074	104.820	118.925	135.232	175.951	230.632	304.244
43	75.6608	85.4839	96.8486	110.012	125.276	142.993	187.508	247.777	329.583
44	78.5523	89.0484	101.238	115.413	131.914	151.143	199.758	266.121	356.950
45	81.5161	92.7199	105.782	121.029	138.850	159.700	212.744	285.749	386.506
46	84.5540	96.5015	110.484	126.871	146.098	168.685	226.508	306.752	418.426
47	87.6679	100.397	115.351	132.945	153.673	178.119	241.099	329.224	452.900
48	90.8596	104.408	120.388	139.263	161.588	188.025	256.565	353.270	490.132
49	94.1311	108.541	125.602	145.834	169.859	198.427	272.958	378.999	530.343
50	**97.4844**	**112.797**	**130.998**	**152.667**	**178.503**	**209.348**	**290.336**	**406.529**	**573.770**
51	100.921	117.181	136.583	159.774	187.536	220.815	308.756	435.986	620.672
52	104.444	121.696	142.363	167.165	196.975	232.856	328.281	467.505	671.326
53	108.056	126.347	148.346	174.851	206.839	245.499	348.978	501.230	726.032
54	111.757	131.137	154.538	182.845	217.146	258.774	370.917	537.316	785.114
55	115.551	136.072	160.947	191.159	227.918	272.713	394.172	575.929	848.923
56	119.440	141.154	167.580	199.806	239.174	287.348	418.822	617.244	917.837
57	123.426	146.388	174.445	208.798	250.937	302.716	444.952	661.451	992.264
58	127.511	151.780	181.551	218.150	263.229	318.851	472.649	708.752	1072.65
59	131.699	157.333	188.905	227.876	276.075	335.794	502.008	759.365	1159.46
60	**135.991**	**163.053**	**196.517**	**237.991**	**289.498**	**353.584**	**533.128**	**813.520**	**1253.21**

Table 33. Annuities. Present value of one dollar per annum

Yr.	2½%	3%	3½%	4%	4½%	5%	6%	7%	8%
1	0.97561	0.97087	0.96618	0.96154	0.95694	0.95238	0.94340	0.93458	0.92593
2	1.92742	1.91347	1.89969	1.88609	1.87267	1.85941	1.83339	1.80802	1.78326
3	2.85602	2.82861	2.80164	2.77509	2.74896	2.72325	2.67301	2.62432	2.57710
4	3.76197	3.71710	3.67308	3.62990	3.58753	3.54595	3.46511	3.38721	3.31213
5	4.64583	4.57971	4.51505	4.45182	4.38998	4.32948	4.21236	4.10020	3.99271
6	5.50812	5.41719	5.32855	5.24214	5.15787	5.07569	4.91732	4.76654	4.62288
7	6.34939	6.23028	6.11454	6.00205	5.89270	5.78637	5.58238	5.38929	5.20637
8	7.17014	7.01969	6.87396	6.73275	6.59589	6.46321	6.20979	5.97130	5.74664
9	7.97087	7.78611	7.60769	7.43533	7.26879	7.10782	6.80169	6.51523	6.24689
10	**8.75206**	**8.53020**	**8.31661**	**8.11090**	**7.91272**	**7.72173**	**7.36009**	**7.02358**	**6.71008**
11	9.51421	9.25262	9.00155	8.76048	8.52892	8.30641	7.88687	7.49867	7.13896
12	10.2578	9.95400	9.66333	9.38507	9.11858	8.86325	8.38384	7.94269	7.53608
13	10.9832	10.6350	10.3027	9.98565	9.68285	9.39357	8.85268	8.35765	7.90378
14	11.6909	11.2961	10.9205	10.5631	10.2228	9.89864	9.29498	8.74547	8.24424
15	12.3814	11.9379	11.5174	11.1184	10.7396	10.3797	9.71225	9.10791	8.55948
16	13.0550	12.5611	12.0941	11.6523	11.2340	10.8378	10.1059	9.44665	8.85137
17	13.7122	13.1661	12.6513	12.1657	11.7072	11.2741	10.4773	9.76322	9.12164
18	14.3534	13.7535	13.1897	12.6593	12.1600	11.6896	10.8276	10.0591	9.37189
19	14.9789	14.3238	13.7098	13.1339	12.5933	12.0853	11.1581	10.3356	9.60360
20	**15.5892**	**14.8775**	**14.2124**	**13.5903**	**13.0079**	**12.4622**	**11.4699**	**10.5940**	**9.81815**
21	16.1846	15.4150	14.6980	14.0292	13.4047	12.8212	11.7641	10.8355	10.0168
22	16.7654	15.9369	15.1671	14.4511	13.7844	13.1630	12.0416	11.0612	10.2007
23	17.3321	16.4436	15.6204	14.8568	14.1478	13.4886	12.3034	11.2722	10.3711
24	17.8850	16.9355	16.0584	15.2470	14.4955	13.7986	12.5504	11.4693	10.5288
25	18.4244	17.4132	16.4815	15.6221	14.8282	14.0939	12.7834	11.6536	10.6748
26	18.9506	17.8768	16.8904	15.9828	15.1466	14.3752	13.0032	11.8258	10.8100
27	19.4640	18.3270	17.2854	16.3296	15.4513	14.6430	13.2105	11.9867	10.9352
28	19.9649	18.7641	17.6670	16.6631	15.7429	14.8981	13.4062	12.1371	11.0511
29	20.4536	19.1885	18.0358	16.9837	16.0219	15.1411	13.5907	12.2777	11.1584
30	**20.9303**	**19.6004**	**18.3921**	**17.2920**	**16.2889**	**15.3725**	**13.7648**	**12.4090**	**11.2578**
31	21.3954	20.0004	18.7363	17.5885	16.5444	15.5928	13.9291	12.5318	11.3498
32	21.8492	20.3888	19.0689	17.8736	16.7889	15.8027	14.0840	12.6466	11.4350
33	22.2919	20.7658	19.3902	18.1477	17.0229	16.0026	14.2302	12.7538	11.5139
34	22.7238	21.1318	19.7007	18.4112	17.2468	16.1929	14.3681	12.8540	11.5869
35	23.1452	21.4872	20.0007	18.6646	17.4610	16.3742	14.4983	12.9477	11.6546
36	23.5563	21.8323	20.2905	18.9083	17.6660	16.5469	14.6210	13.0352	11.7172
37	23.9573	22.1672	20.5705	19.1426	17.8622	16.7113	14.7368	13.1170	11.7752
38	24.3486	22.4925	20.8411	19.3679	18.0500	16.8679	14.8460	13.1935	11.8289
39	24.7303	22.8082	21.1025	19.5845	18.2297	17.0170	14.9491	13.2649	11.8786
40	**25.1028**	**23.1148**	**21.3551**	**19.7928**	**18.4016**	**17.1591**	**15.0463**	**13.3317**	**11.9246**
41	25.4661	23.4124	21.5991	19.9931	18.5661	17.2944	15.1380	13.3941	11.9672
42	25.8206	23.7014	21.8348	20.1856	18.7236	17.4232	15.2245	13.4525	12.0067
43	26.1665	23.9819	22.0627	20.3708	18.8742	17.5459	15.3062	13.5070	12.0432
44	26.5039	24.2543	22.2828	20.5488	19.0184	17.6628	15.3832	13.5579	12.0771
45	26.8330	24.5187	22.4955	20.7200	19.1564	17.7741	15.4558	13.6055	12.1084
46	27.1542	24.7755	22.7009	20.8847	19.2884	17.8801	15.5244	13.6500	12.1374
47	27.4675	25.0247	22.8994	21.0429	19.4147	17.9810	15.5890	13.6916	12.1643
48	27.7732	25.2667	23.0913	21.1951	19.5356	18.0772	15.6500	13.7305	12.1891
49	28.0714	25.5017	23.2766	21.3415	19.6513	18.1687	15.7076	13.7668	12.2122
50	**28.3623**	**25.7298**	**23.4556**	**21.4822**	**19.7620**	**18.2559**	**15.7619**	**13.8008**	**12.2335**
51	28.6462	25.9512	23.6286	21.6175	19.8680	18.3390	15.8131	13.8325	12.2532
52	28.9231	26.1662	23.7958	21.7476	19.9693	18.4181	15.8614	13.8621	12.2715
53	29.1933	26.3750	23.9573	21.8727	20.0663	18.4934	15.9070	13.8898	12.2884
54	29.4568	26.5777	24.1133	21.9930	20.1592	18.5651	15.9500	13.9157	12.3041
55	29.7140	26.7744	24.2641	22.1086	20.2480	18.6335	15.9905	13.9396	12.3186
56	29.9649	26.9655	24.4097	22.2198	20.3330	18.6985	16.0288	13.9626	12.3321
57	30.2096	27.1509	24.5505	22.3268	20.4144	18.7605	16.0649	13.9837	12.3445
58	30.4484	27.3310	24.6864	22.4296	20.4922	18.8195	16.0990	14.0035	12.3560
59	30.6814	27.5058	24.8178	22.5284	20.5667	18.8758	16.1311	14.0219	12.3667
60	**30.9087**	**27.6756**	**24.9447**	**22.6235**	**20.6380**	**18.9293**	**16.1614**	**14.0392**	**12.3768**

Table 34. Sinking fund. Annuity which will amount to one dollar

Yr.	2½%	3%	3½%	4%	4½%	5%	6%	7%	8%
1	1.00000	1.00000	1.00000	1.00000	1.00000	1.00000	1.00000	1.00000	1.00000
2	.493827	.492611	.491400	.490196	.488997	.487805	.485437	.483092	.480769
3	.325137	.323530	.321934	.320349	.318773	.317209	.314110	.311052	.308033
4	.240818	.239027	.237251	.235490	.233744	.232012	.228591	.225228	.221921
5	.190247	.188355	.186481	.184627	.182792	.180975	.177396	.173891	.170456
6	.156550	.154598	.152668	.150762	.148878	.147017	.143363	.139796	.136315
7	.132495	.130506	.128544	.126610	.124701	.122820	.119135	.115553	.112072
8	.114467	.112456	.110477	.108528	.106609	.104722	.101036	.097468	.094015
9	.100457	.098434	.096446	.094493	.092575	.090690	.087022	.083486	.080079
10	**.089259**	**.087231**	**.085241**	**.083291**	**.081379**	**.079505**	**.075868**	**.072377**	**.069029**
11	.080106	.078077	.076092	.074149	.072248	.070389	.066793	.063357	.060076
12	.072487	.070462	.068484	.066552	.064666	.062825	.059277	.055902	.052695
13	.066048	.064030	.062062	.060144	.058275	.056456	.052960	.049651	.046522
14	.060536	.058526	.056571	.054669	.052820	.051024	.047585	.044345	.041297
15	.055766	.053767	.051825	.049941	.048114	.046342	.042963	.039795	.036829
16	.051599	.049611	.047685	.045820	.044015	.042270	.038952	.035858	.032977
17	.047928	.045953	.044043	.042199	.040418	.038699	.035445	.032425	.029629
18	.044670	.042709	.040817	.038993	.037237	.035546	.032357	.029413	.026702
19	.041760	.039814	.037940	.036139	.034407	.032745	.029621	.026753	.024128
20	**.039147**	**.037216**	**.035361**	**.033582**	**.031876**	**.030243**	**.027185**	**.024393**	**.021852**
21	.036787	.034872	.033037	.031280	.029601	.027996	.025005	.022289	.019832
22	.034646	.032747	.030932	.029199	.027546	.025971	.023046	.020406	.018032
23	.032696	.030814	.029019	.027309	.025682	.024137	.021278	.018714	.016422
24	.030913	.029047	.027273	.025587	.023987	.022471	.019679	.017189	.014978
25	.029276	.027428	.025674	.024012	.022439	.020952	.018227	.015811	.013679
26	.027768	.025938	.024205	.022567	.021021	.019564	.016904	.014561	.012507
27	.026377	.024564	.022852	.021239	.019719	.018292	.015697	.013426	.011448
28	.025088	.023293	.021603	.020013	.018521	.017123	.014593	.012392	.010489
29	.023891	.022115	.020445	.018880	.017415	.016046	.013580	.011449	.009618
30	**.022777**	**.021019**	**.019371**	**.017830**	**.016392**	**.015051**	**.012649**	**.010586**	**.008827**
31	.021739	.019999	.018372	.016855	.015443	.014132	.011792	.009797	.008107
32	.020768	.019047	.017442	.015949	.014563	.013280	.011002	.009073	.007451
33	.019859	.018156	.016572	.015104	.013745	.012490	.010273	.008408	.006852
34	.019007	.017322	.015760	.014315	.012982	.011755	.009598	.007797	.006304
35	.018205	.016539	.014998	.013577	.012270	.011072	.008974	.007234	.005803
36	.017451	.015804	.014284	.012887	.011606	.010434	.008395	.006715	.005345
37	.016741	.015112	.013613	.012240	.010984	.009840	.007857	.006237	.004924
38	.016070	.014459	.012982	.011632	.010402	.009284	.007358	.005795	.004539
39	.015436	.013844	.012388	.011061	.009856	.008765	.006894	.005387	.004185
40	**.014836**	**.013262**	**.011827**	**.010523**	**.009343**	**.008278**	**.006462**	**.005009**	**.003860**
41	.014268	.012712	.011298	.010017	.008862	.007822	.006059	.004660	.003562
42	.013728	.012192	.010798	.009540	.008409	.007395	.005683	.004336	.003287
43	.013217	.011698	.010325	.009090	.007982	.006993	.005333	.004036	.003034
44	.012730	.011230	.009878	.008665	.007581	.006616	.005006	.003758	.002802
45	.012267	.010785	.009453	.008262	.007202	.006262	.004701	.003499	.002587
46	.011826	.010363	.009051	.007882	.006845	.005928	.004415	.003260	.002390
47	.011407	.009961	.008669	.007522	.006507	.005614	.004148	.003037	.002208
48	.011006	.009578	.008306	.007181	.006189	.005318	.003898	.002831	.002040
49	.010623	.009213	.007962	.006857	.005887	.005040	.003664	.002639	.001886
50	**.010258**	**.008866**	**.007634**	**.006550**	**.005602**	**.004777**	**.003444**	**.002460**	**.001743**
51	.009909	.008534	.007322	.006259	.005332	.004529	.003239	.002294	.001611
52	.009574	.008217	.007024	.005982	.005077	.004295	.003046	.002139	.001490
53	.009254	.007915	.006741	.005719	.004835	.004073	.002866	.001995	.001377
54	.008948	.007626	.006471	.005469	.004605	.003864	.002696	.001861	.001274
55	.008654	.007349	.006213	.005231	.004388	.003667	.002537	.001736	.001178
56	.008373	.007085	.005967	.005005	.004181	.003480	.002388	.001620	.001090
57	.008102	.006831	.005732	.004789	.003985	.003303	.002247	.001512	.001008
58	.007842	.006588	.005508	.004584	.003799	.003136	.002116	.001411	.000932
59	.007593	.006356	.005294	.004388	.003622	.002978	.001992	.001317	.000862
60	**.007388**	**.006133**	**.005089**	**.004202**	**.003454**	**.002828**	**.001876**	**.001229**	**.000796**

Table 35. Pressure equivalents

1 dyne per sq. cm. = 0.00101979 gm./cm.^{2} = 0.000466646 poundal/in.^{2}
1 gram per sq. cm. = 980.5966 dynes/cm.^{2} = 0.457592 poundal/in.^{2}
1 poundal per sq. in. = 2142.95 dynes/cm.^{2} = 2.18536 gm./cm.^{2} = 0.0310832 pound/in.^{2}

Kilograms per square centimeter (Kg./cm.^{2})	Pounds per square inch (Lb./in.^{2})	Pounds per square foot (Lb./in.^{2})	Net tons (2000 lb.) per square foot	Atmospheres, standard, 760 mm.	Mercury (Hg = 13.59593 sp. gr.)		Water Maximum density, 4° C.	
					Millimeter	Inches	Meters	Feet
1	14.2234	2048.17	1.02408	0.96778	735.514	28.9572	10	32.8083
0.07031	1	144	0.07200	0.06804	51.7116	2.03588	0.70307	2.30665
0.0004882	0.006944	1	0.00050	0.0004725	0.35911	0.01414	0.004882	0.01602
0.97648	13.8889	2000	1	0.94502	718.216	28.2762	9.76482	32.0367
1.03329	14.6969	2116.35	1.05818	1	760	29.9212	10.3329	33.9006
0.001360	0.01934	2.78468	0.001392	0.001316	1	0.03937	0.01360	0.04461
0.03453	0.49119	70.7310	0.03537	0.03342	25.4001	1	0.34534	1.13299
0.10	1.42234	204.817	0.10241	0.09678	73.5514	2.89572	1	3.28083
0.03048	0.43353	62.4283	0.03121	0.02950	22.4185	0.88262	0.30480	1

Table 36. Equivalents of energy, work and heat

1 dyne-cm. = 1 erg = 0.00101979 gm.-cm. = 7.37612×10^{-8} ft.-lb.
1 gm.-cm. = 980.5966 ergs = 7.233×10^{-5} ft.-lb.
1 ft.-lb. = 13,557,300 ergs = 13,825.5 gm.-cm.

Kilogram-meters (Kg-m.)	Foot-pounds (Ft-lb.)	Horsepower-hour		Kilowatt-hours (kw-hr.)	Joules (10^7 ergs) (j-sec.)	Thermal units	
		U. S., hp-hr.	Metric 76 kg-m-hr.			Common (B.t.u.)	Metric (Kg-cal.)
1	7.23300	3.653×10^{-6}	3.704×10^{-6}	2.724×10^{-6}	9.80599	0.009296	0.002342
0.13826	1	5.051×10^{-7}	5.121×10^{-7}	3.766×10^{-7}	1.35573	0.001285	3.239×10^{-4}
273,745	1,980,000	1	1.01387	0.74565	2,684,340	2544.65	641.240
270,000	1,952,910	0.98632	1	0.73545	2,647,610	2509.83	632.467
367,123	2,655,403	1.34111	1.35972	1	3,600,000	3412.66	859.975
0.10198	0.73761	3.725×10^{-7}	3.777×10^{-7}	2.778×10^{-7}	1	9.480×10^{-4}	2.389×10^{-4}
107.577	778.104	3.930×10^{-4}	3.984×10^{-4}	2.930×10^{-4}	1054.90	1	0.25200
426.900	3087.77	0.001559	0.001581	0.001163	4186.17	3.96832	1

Table 37. Equivalent parts of feet, inches and millimeters

Inches		Feet		Mm.	Inches		Feet		Mm.
Fraction	Decimal	Fraction	Decimal		Fraction	Decimal	Fraction	Decimal	
1/16	0.0625	.....	0.0052	1.588	3 7/16	3.4375	.....	0.2865	87.313
1/8	0.1250	.....	0.0104	3.175	3 1/2	3.5000	.....	0.2917	88.900
3/16	0.1875	1/64	0.0156	4.763	3 9/16	3.5625	19/64	0.2969	90.488
1/4	0.2500	.....	0.0208	6.350	3 5/8	3.6250	.....	0.3021	92.075
5/16	0.3125	.....	0.0260	7.938	3 11/16	3.6875	.....	0.3073	93.663
3/8	0.3750	1/32	0.0312	9.525	3 3/4	3.7500	5/16	0.3125	95.250
7/16	0.4375	.....	0.0365	11.113	3 13/16	3.8125	.....	0.3177	96.838
1/2	0.5000	.....	0.0417	12.700	3 7/8	3.8750	.....	0.3229	98.425
9/16	0.5625	3/64	0.0469	14.288	3 15/16	3.9375	21/64	0.3281	100.013
5/8	0.6250	.....	0.0521	15.875					
11/16	0.6875	.....	0.0573	17.463	4	4.0000	.....	0.3333	101.600
3/4	0.7500	1/16	0.0625	19.050	4 1/16	4.0625	.....	0.3385	103.188
13/16	0.8125	.....	0.0677	20.638	4 1/8	4.1250	11/32	0.3437	104.775
7/8	0.8750	.....	0.0729	22.225	4 3/16	4.1875	.....	0.3490	106.363
15/16	0.9375	5/64	0.0781	23.813	4 1/4	4.2500	.....	0.3542	107.950
					4 5/16	4.3125	23/64	0.3594	109.538
1	1.0000	.....	0.0833	25.400	4 3/8	4.3750	.....	0.3646	111.125
1 1/16	1.0625	.....	0.0885	26.988	4 7/16	4.4375	.....	0.3698	112.713
1 1/8	1.1250	3/32	0.0937	28.575	4 1/2	4.5000	3/8	0.3750	114.300
1 3/16	1.1875	.....	0.0990	30.163	4 9/16	4.5625	.....	0.3802	115.888
1 1/4	1.2500	.....	0.1042	31.750	4 5/8	4.6250	.....	0.3854	117.475
1 5/16	1.3125	7/64	0.1094	33.338	4 11/16	4.6875	25/64	0.3906	119.063
1 3/8	1.3750	.....	0.1146	34.925	4 3/4	4.7500	.....	0.3958	120.650
1 7/16	1.4375	.....	0.1198	36.513	4 13/16	4.8125	.....	0.4010	122.238
1 1/2	1.5000	1/8	0.1250	38.100	4 7/8	4.8750	13/32	0.4062	123.825
1 9/16	1.5625	.....	0.1302	39.688	4 15/16	4.9375	.....	0.4115	125.413
1 5/8	1.6250	.....	0.1354	41.275					
1 11/16	1.6875	9/64	0.1406	42.863	5	5.0000	.....	0.4167	127.000
1 3/4	1.7500	.....	0.1458	44.450	5 1/16	5.0625	27/64	0.4219	128.588
1 13/16	1.8125	.....	0.1510	46.038	5 1/8	5.1250	.....	0.4271	130.175
1 7/8	1.8750	5/32	0.1562	46.625	5 3/16	5.1875	.....	0.4323	131.763
1 15/16	1.9375	.....	0.1615	49.213	5 1/4	5.2500	7/16	0.4375	133.350
					5 5/16	5.3125	.....	0.4427	134.938
2	2.0000	.....	0.1667	50.800	5 3/8	5.3750	.....	0.4479	136.525
2 1/16	2.0625	11/64	0.1719	52.388	5 7/16	5.4375	29/64	0.4531	138.113
2 1/8	2.1250	.....	0.1771	53.975	5 1/2	5.5000	.....	0.4583	139.700
2 3/16	2.1875	.....	0.1823	55.563	5 9/16	5.5625	.....	0.4635	141.288
2 1/4	2.2500	3/16	0.1875	57.150	5 5/8	5.6250	15/32	0.4687	142.875
2 5/16	2.3125	.....	0.1927	58.738	5 11/16	5.6875	.....	0.4740	144.463
2 3/8	2.3750	.....	0.1979	60.325	5 3/4	5.7500	.....	0.4792	146.050
2 7/16	2.4375	13/64	0.2031	61.913	5 13/16	5.8125	31/64	0.4844	147.638
2 1/2	2.5000	.....	0.2083	63.500	5 7/8	5.8750	.....	0.4896	149.225
2 9/16	2.5625	.....	0.2135	65.088	5 15/16	5.9375	.....	0.4948	150.813
2 5/8	2.6250	7/32	0.2187	66.675					
2 11/16	2.6875	.....	0.2240	68.263	6	6.0000	1/2	0.5000	152.400
2 3/4	2.7500	.....	0.2292	69.850	6 1/16	6.0625	.....	0.5052	153.988
2 13/16	2.8125	15/64	0.2344	71.438	6 1/8	6.1250	.....	0.5104	155.575
2 7/8	2.8750	.....	0.2396	73.025	6 3/16	6.1875	33/64	0.5156	157.163
2 15/16	2.9375	.....	0 2448	74.613	6 1/4	6.2500	.....	0.5208	158.750
					6 5/16	6.3125	.....	0.5260	160.338
3	3.0000	1/4	0.2500	76.200	6 3/8	6.3750	17/32	0.5312	161.925
3 1/16	3.0625	.....	0.2552	77.788	6 7/16	6.4375	.....	0.5365	163.513
3 1/8	3.1250	.....	0.2604	79.375	6 1/2	6.5000	.....	0.5417	165.100
3 3/16	3.1875	17/64	0.2656	80.963	6 9/16	6.5625	35/64	0.5469	166.688
3 1/4	3.2500	.....	0.2708	82.550	6 5/8	6.6250	.....	0.5521	168.275
3 5/16	3.3125	.....	0.2760	84.138	6 11/16	6.6875	.....	0.5573	169.863
3 3/8	3.3750	9/32	0.2812	85.725	6 3/4	6.7500	9/16	0.5625	171.450

Table 37. Equivalent parts of feet, inches and millimeters—*Continued*

Inches		Feet		Mm.	Inches		Feet		Mm.
Fraction	Decimal	Fraction	Decimal		Fraction	Decimal	Fraction	Decimal	
6 13/16	6.8125	.....	0.5677	173.038	9 7/16	9.4375	.....	0.7865	239.713
6 7/8	6.8750	.....	0.5729	174.625	9 1/2	9.5000	.....	0.7917	241.300
6 15/16	6.9375	37/64	0.5781	176.213	9 9/16	9.5625	51/64	0.7969	242.888
					9 5/8	9.6250	.....	0.8021	244.475
7	7.0000	.....	0.5833	177.800	9 11/16	9.6875	.....	0.8073	246.063
7 1/16	7.0625	.....	0.5885	179.388	9 3/4	9.7500	13/16	0.8125	247.650
7 1/8	7.1250	19/32	0.5937	180.975	9 13/16	9.8125	.....	0.8177	249.238
7 3/16	7.1875	.....	0.5990	182.563	9 7/8	9.8750	.....	0.8229	250.825
7 1/4	7.2500	.....	0.6042	184.150	9 15/16	9.9375	53/64	0.8281	252.413
7 5/16	7.3125	39/64	0.6094	185.738					
7 3/8	7.3750	.....	0.6146	187.325	10	10.0000	.....	0.8333	254.000
7 7/16	7.4375	.....	0.6198	188.913	10 1/16	10.0625	.....	0.8385	255.588
7 1/2	7.5000	5/8	0.6250	190.500	10 1/8	10.1250	27/32	0.8437	257.176
7 9/16	7.5625	.....	0.6302	192.088	10 3/16	10.1875	.....	0.8490	258.763
7 5/8	7.6250	.....	0.6354	193.675	10 1/4	10.2500	.....	0.8542	260.351
7 11/16	7.6875	41/64	0.6406	195.263	10 5/16	10.3125	55/64	0.8594	261.938
7 3/4	7.7500	.....	0.6458	196.850	10 3/8	10.3750	.....	0.8646	263.526
7 13/16	7.8125	.....	0.6510	198.438	10 7/16	10.4375	.....	0.8698	265.113
7 7/8	7.8750	21/32	0.6562	200.025	10 1/2	10.5000	7/8	0.8750	266.701
7 15/16	7.9375	.....	0.6615	201.613	10 9/16	10.5625	.....	0.8802	268.288
					10 5/8	10.6250	.....	0.8854	269.876
8	8.0000	.....	0.6667	203.200	10 11/16	10.6875	57/64	0.8906	271.463
8 1/16	8.0625	43/64	0.6719	204.788	10 3/4	10.7500	.....	0.8958	273.051
8 1/8	8.1250	.....	0.6771	206.375	10 13/16	10.8125	.....	0.9010	274.638
8 3/16	8.1875	.....	0.6823	207.963	10 7/8	10.8750	29/32	0.9062	276.226
8 1/4	8.2500	11/16	0.6875	209.550	10 15/16	10.9375	.....	0.9115	277.813
8 5/16	8.3125	.....	0.6927	211.138					
8 3/8	8.3750	.....	0.6979	212.725	11	11.0000	.....	0.9167	279.401
8 7/16	8.4375	45/64	0.7031	214.313	11 1/16	11.0625	59/64	0.9219	280.988
8 1/2	8.5000	.....	0.7083	215.900	11 1/8	11.1250	.....	0.9271	282.576
8 9/16	8.5625	.....	0.7135	217.488	11 3/16	11.1875	.....	0.9323	284.163
8 5/8	8.6250	23/32	0.7187	219.075	11 1/4	11.2500	15/16	0.9375	285.751
8 11/16	8.6875	.....	0.7240	220.663	11 5/16	11.3125	.....	0.9427	287.338
8 3/4	8.7500	.....	0.7292	222.250	11 3/8	11.3750	.....	0.9479	288.926
8 13/16	8.8125	47/64	0.7344	223.838	11 7/16	11.4375	61/64	0.9531	290.513
8 7/8	8.8750	.....	0.7396	225.425	11 1/2	11.5000	.....	0.9583	292.101
8 15/16	8.9375	.....	0.7448	227.013	11 9/16	11.5625	.....	0.9635	293.688
					11 5/8	11.6250	31/32	0.9687	295.276
9	9.0000	3/4	0.7500	228.600	11 11/16	11.6875	.....	0.9740	296.863
9 1/16	9.0625	.....	0.7552	230.188	11 3/4	11.7500	.....	0.9792	298.451
9 1/8	9.1250	.....	0.7604	231.775	11 13/16	11.8125	63/64	0.9844	300.038
9 3/16	9.1875	49/64	0.7656	233.363	11 7/8	11.8750	.....	0.9896	301.626
9 1/4	9.2500	.....	0.7708	234.950	11 15/16	11.9375	.....	0.9948	303.213
9 5/16	9.3125	.....	0.7760	236.538					
9 3/8	9.3750	25/32	0.7812	238.125	12	12.0000	1	1.0000	304.801

Table 38. Equivalents of power, rate of energy and heat

1 erg per sec. = 1 dyne-cm./sec. = 0.00101979 gm-cm./sec. = 7.37612×10^{-8} ft-lb./sec.
1 gram-centimeter per sec. = 980.5966 ergs/sec. = 7.238×10^{-5} ft-lb./sec.
1 ft-lb./sec. = 13,557,300 ergs/sec. = 13,825.5 gm-cm./sec.

Kilogram-meters per second (Kg-m./sec.)	Foot-pounds per second (Ft-lb./sec.)	Horsepower		Kilowatt (Kw.)	Watt, 10^7 ergs/sec.	Thermal units per second	
		U. S., 550 ft-lb./sec.	75 Metric, kg-m/sec.			Common (B.t.u./sec.)	Metric (Kg-cal./sec.)
1	7.23300	0.01315	0.01333	0.009806	9.80597	0.009296	0.002342
0.13826	1	0.001818	0.001843	0.001356	1.35573	0.001285	3237×10^{-4}
76.0404	550	1	1.01387	0.74565	745.650	0.70685	0.17812
75	542.475	0.98632	1	0.73545	735.448	0.69718	0.17569
101.979	737.612	1.34111	1.35972	1	1000	0.94796	0.23888
0.10198	0.73761	0.001341	0.001360	0.001	1	0.0009480	2.389×10^{-4}
107.577	778.104	1.41474	1.43436	1.05490	1054.90	1	0.25200
426.900	3087.77	5.61412	5.69200	4.18617	4186.17	3.96832	1

Table 39. Equivalents of linear measure

Kilometer (Km.)	Meter (M.)	Centimeter (Cm.)	Millimeter (Mm.)	Inch (In.)	Foot (Ft.)	Yard (Yd.)	Micron (μ)	Millimicron ($\mu\mu$)
1	1000	10^5	10^6	39,370	3280.83	1093.61	10^9	10^{12}
0.001	1	100	1000	39.37	3.28083	1.09361	10^6	10^9
10^{-5}	.01	1	10	0.3937	0.032808	0.0109361	10^4	10^7
10^{-6}	.001	0.1	1	0.03937	0.0032808	0.0010936	10^3	10^6
2.54×10^{-5}	0.02540	2.540	25.40005	1	0.08333	0.02778	25,400	2.54×10^7
3.048×10^{-4}	0.304801	30.480	304.801	12	1	0.33333	304,801	3.048×10^8
9.144×10^{-4}	0.914402	91.440	914.4	36	3	1	914,402	9.144×10^8
10^{-9}	10^{-6}	10^{-4}	10^{-3}	3.937×10^{-5}	3.2808×10^{-6}	1.0936×10^{-6}	1	10^3
10^{-12}	10^{-9}	10^{-7}	10^{-6}	3.937×10^{-8}	3.2808×10^{-9}	1.0936×10^{-9}	10^{-3}	1

Table 40. Equivalents of surfaces and areas

Square meters ($M.^2$)	Square inches (Sq. in.)	Square feet (Sq. ft.)	Square yards (Sq. yd.)
1	1550.00	10.7639	1.19599
0.0006452	1	0.006944	0.0007716
0.09290	144	1	0.11111
0.83613	1296	9	1

1 sq. mm. = 0.01 $cm.^2$ = 0.00155 sq. in. = 1217.36 circ. mils.

Table 41. Capacity equivalents

Capacity, dry, English

Bushel (Bu.)	Peck (Pk.)	Quart (Qt.)	Pint (Pt.)
1	4	32	64
0.25	1	8	16
0.03125	0.125	1	2
0.015625	0.0625	0.5	1

Capacity, liquid, English

Pipe	Hogshead (Hhd.)	Tierce *	Barrel (Bbl.)	U. S. gallons † (Gal.)	Quart (Qt.)	Pint (Pt.)	Gill
1	2	3	4	126	504	1008	4032
0.5	1	1.5	2	63	252	504	2016
0.25	0.5	0.75	1	31.5	126	252	1008
0.3333	0.6667	1	1.33	42	168	336	1344
0.007935	0.01587	0.023810	0.031746	1	4	8	32
0.001984	0.003968	0.005952	0.007937	0.25	1	2	8
0.000496	0.001984	0.002976	0.003968	0.125	0.5	1	4
0.000248	0.000496	0.000744	0.000992	0.03125	0.125	0.25	1

* The American petroleum industry has adopted the tierce, 42 gal., as its barrel.

† British Imperial gallon = 1.20091 U. S. gal.

Capacity metric. The liter (l.) is the unit and the equivalent of the volume occupied by the mass of 1 kilogram of pure water at maximum density. The smaller units usually employed are the cubic centimeter (cu. cm. or cc.) and the cubic millimeter (cu. mm. or $mm.^3$) which are, for all practical purposes, 0.001 and 0.000001 liter respectively.

Table 42. Equivalent forces or weights per unit of volume

1 dyne per cu. cm. = 0.00101979 gm./$cm.^3$ = 0.00118528 poundal/$in.^3$
1 gram per cu. cm. = 980.5966 dynes/$cm.^3$ = 1.162283 poundal/$in.^3$
1 poundal per cu. in. = 843.683 dynes/$cm.^3$ = 0.860378 gm./$cm.^3$ = 0.0310832 lb./$in.^3$

Grams per cu. cm. (Gm./$cm.^3$)	Pounds per cu. in. (Lb./$in.^3$)	Pounds per cu. ft. (Lb./$ft.^3$)	Pounds per cu. yd. (Lb./$yd.^3$)	Kilograms per cu. m. (Kg./$m.^3$)	Pounds per gal., liquid, U. S.
1	0.03613	62.4283	1685.56	1000	8.34545
27.6797	1	1728	46,656	27,679.7	231
0.01602	5.787×10^{-4}	1	27	16.0184	0.13368
5.933×10^{-4}	2.143×10^{-5}	0.03704	1	0.59327	0.004951
0.001	3.613×10^{-5}	0.06243	1.68556	1	0.008345
0.11983	0.004329	7.48052	201.974	9.30920	1

Table 43. Equivalents

Kilogram (Kg.)	Gram (Gm.)	Milligram (Mg.)	Grain (Gr.)	Avoirdupois		Troy		
				Pounds (Lb.)	Ounce (Oz.)	Pound (Lb.)	Ounce (Oz.)	Penny-weight (Dwt.)
1	1000	10^6	15,432.4	2.20462	35.2740	2.67923	32.1507	643.015
0.001	1	1000	15.432	2.205×10^{-3}	3.527×10^{-2}	2.679×10^{-3}	3.215×10^{-2}	0.64301
10^{-6}	0.001	1	0.01543	2.205×10^{-6}	3.527×10^{-5}	2.679×10^{-6}	3.215×10^{-5}	6.430×10^{-4}
6.480×10^{-5}	0.06480	64.799	1	1.429×10^{-4}	2.286×10^{-3}	1.736×10^{-4}	2.083×10^{-3}	0.04167
0.45359	453.592	453,592.4	7000	1	16	1.21528	14.583	291.667
0.02835	28.3495	28,349.53	437.5	0.0625	1	0.07595	0.91146	18.229
0.37324	373.242	373,241.8	5760	0.82286	13.166	1	12	240
0.03110	31.103	31,103.5	480	0.06857	1.09714	0.08333	1	20
1.555×10^{-3}	1.55517	1555.17	24	3.429×10^{-3}	0.05486	4.167×10^{-3}	0.05	1
3.888×10^{-3}	3.88794	3887.94	60	8.571×10^{-3}	0.13714	0.01042	0.125	2.5
1.296×10^{-3}	1.29598	1295.98	20	2.857×10^{-3}	0.04571	3.472×10^{-3}	0.04167	0.83333
907.185	9.072×10^5	9.072×10^8	14×10^6	2000	32,000	2430.56	29,166.67	583,334
1016.05	1.016×10^6	1.016×10^9	1.568×10^7	2240	35,840	2722.22	32,666.7	653,334
1000	10^6	10^9	1.543×10^7	2204.62	35.274	2679.23	32,150.77	643,015

Miscellaneous weights. *Malaya.* 1 PICUL = 100 CATTY = 133 lb.

Table 44. Miscellaneous

When unit column is entered as

Units	Cu. ft.	Gallons	Cu. ft.	Liters	Gallons	Liters	Kg. per min.	Tons per 24 hr.
	read							
	Gallons	Cu. ft.	Liters	Cu. ft.	Liters	Gallons	Tons per 24 hr.	Cu. ft. per min. $\times \theta$ *
1	7.48	0.1337	28.32	0.0353	3.785	0.264	1.587	1.389
2	14.96	0.2674	56.63	0.0706	7.571	0.528	3.175	2.778
3	22.44	0.4010	84.95	0.1059	11.356	0.793	4.762	4.167
4	29.92	0.5347	113.27	0.1413	15.142	1.057	6.349	5.556
5	37.40	0.6684	141.58	0.1766	18.927	1.321	7.937	6.944
6	44.88	0.8021	169.90	0.2119	22.713	1.585	9.524	8.333
7	52.36	0.9358	198.22	0.2472	26.498	1.849	11.111	9.722
8	59.84	1.0694	226.54	0.2825	30.283	2.113	12.699	11.111
9	67.32	1.2031	254.85	0.3178	34.069	2.378	14.286	12.500

* θ = weight per cubic foot.

of masses and weights

Apothecaries'			Short (net) ton	Long (gross) ton	Metric ton
Ounce (℥)	Dram (ʒ)	Scruple (℈)			
32.1507	257.206	771.618	1.102×10^{-3}	9.842×10^{-4}	0.001
3.215×10^{-2}	0.25721	0.77162	1.102×10^{-6}	9.842×10^{-7}	10^{-6}
3.215×10^{-5}	2.572×10^{-4}	7.716×10^{-4}	1.102×10^{-9}	9.842×10^{-10}	10^{-9}
2.083×10^{-3}	0.01667	0.05	7.143×10^{-8}	6.378×10^{-8}	6.480×10^{-8}
14.583	116.667	350	0.0005	4.464×10^{-4}	4.536×10^{-4}
0.91146	7.29166	21.875	3.125×10^{-5}	2.790×10^{-5}	2.835×10^{-5}
12	96	288	4.114×10^{-4}	3.673×10^{-4}	3.732×10^{-4}
1	8	24	3.429×10^{-5}	3.061×10^{-5}	3.110×10^{-5}
0.05	0.4	1.2	1.714×10^{-6}	1.531×10^{-6}	1.555×10^{-6}
0.125	1	3	4.286×10^{-6}	3.826×10^{-6}	3.888×10^{-6}
0.04167	0.33333	1	1.429×10^{-6}	1.275×10^{-6}	1.296×10^{-6}
29,166.67	233,334	7×10^5	1	0.89286	0.90718
32,666.7	261,334	7.84×10^5	1.12	1	1.01605
32,150.77	257,206	7.716×10^5	1.1023	0.98421	1

equivalents

Units	When unit column is entered as							
	Gr. per gal.	Gm. per liter	Slope in per cent.	Inches per foot.	Slope in per cent.	Degrees	Inches per foot	Degrees
	read							
	Gm. per liter	Gr. per gal.	Inches per foot	Slope in per cent.	Degrees	Slope in per cent.	Degrees	Inches per foot
1	0.017	58.4	0.12	8.33	0° 34′	1.75	4° 46′	0.210
2	0.034	116.8	0.24	16.67	1° 9′	3.49	9° 28′	0.419
3	0.051	175.3	0.36	25.00	1° 43′	5.24	14° 02′	0.629
4	0.068	233.7	0.48	33.33	2° 17′	6.99	18° 26′	0.838
5	0.086	292.1	0.60	41.67	2° 52′	8.75	22° 37′	1.048
6	0.103	350.5	0.72	50.00	3° 26′	10.51	26° 34′	1.257
7	0.120	408.9	0.84	58.33	4° 1′	12.28	30° 15′	1.467
8	0.137	467.3	0.96	66.67	4° 35′	14.05	33° 41′	1.676
9	0.154	525.8	1.08	75.00	5° 10′	15.84	36° 52′	1.886

Table 45. International atomic weights (1940)

	Symbol	Atomic number	Atomic weight		Symbol	Atomic number	Atomic weight
Aluminum	Al	13	26.97	Molybdenum	Mo	42	95.95
Antimony	Sb	51	121.76	Neodymium	Nd	60	144.27
Argon	A	18	39.944	Neon	Ne	10	20.183
Arsenic	As	33	74.91	Nickel	Ni	28	58.69
Barium	Ba	56	137.36	Nitrogen	N	7	14.008
Beryllium	Be	4	9.02	Osmium	Os	76	190.2
Bismuth	Bi	83	209.00	Oxygen	O	8	16.0000
Boron	B	5	10.82	Palladium	Pd	46	106.7
Bromine	Br	35	79.916	Phosphorus	P	15	30.98
Cadmium	Cd	48	112.41	Platinum	Pt	78	195.23
Caesium	Cs	55	132.91	Potassium	K	19	39.096
Calcium	Ca	20	40.08	Praseodymium	Pr	59	140.92
Carbon	C	6	12.010	Protactinium	Pa	91	231
Cerium	Ce	58	140.13	Radium	Ra	88	226.05
Chlorine	Cl	17	35.457	Radon	Rn	86	222
Chromium	Cr	24	52.01	Rhenium	Re	75	186.31
Cobalt	Co	27	58.94	Rhodium	Rh	45	102.91
Columbium	Cb	41	92.91	Rubidium	Rb	37	85.48
Copper	Cu	29	63.57	Ruthenium	Ru	44	101.7
Dysprosium	Dy	66	162.46	Samarium	Sm	62	150.43
Erbium	Er	68	167.2	Scandium	Sc	21	45.10
Europium	Eu	63	152.0	Selenium	Se	34	78.96
Fluorine	F	9	19.00	Silicon	Si	14	28.06
Gadolinium	Gd	64	156.9	Silver	Ag	47	107.880
Gallium	Ga	31	69.72	Sodium	Na	11	22.997
Germanium	Ge	32	72.60	Strontium	Sr	38	87.63
Gold	Au	79	197.2	Sulphur	S	16	32.06
Hafnium	Hf	72	178.6	Tantalum	Ta	73	180.88
Helium	He	2	4.003	Tellurium	Te	52	127.61
Holmium	Ho	67	163.5	Terbium	Tb	65	159.2
Hydrogen	H	1	1.0080	Thallium	Tl	81	204.39
Indium	In	49	114.76	Thorium	Th	90	232.12
Iodine	I	53	126.92	Thulium	Tm	69	169.4
Iridium	Ir	77	193.1	Tin	Sn	50	118.70
Iron	Fe	26	55.85	Titanium	Ti	22	47.90
Krypton	Kr	36	83.7	Tungsten	W	74	183.92
Lanthanum	La	57	138.92	Uranium	U	92	238.07
Lead	Pb	82	207.21	Vanadium	V	23	50.95
Lithium	Li	3	6.940	Xenon	Xe	54	131.3
Lutecium	Lu	71	174.99	Ytterbium	Yb	70	173.04
Magnesium	Mg	12	24.32	Yttrium	Y	39	88.92
Manganese	Mn	25	54.93	Zinc	Zn	30	65.38
Mercury	Hg	80	200.61	Zirconium	Zr	40	91.22

Table 46. Composition and specific gravity of minerals

Mineral	Composition	Sp. gr.[a]
Acanthite	Ag_2S	7.2
Actinolite	$Ca(Mg \cdot Fe)_3(SiO_3)_4$	3.1
Agate	Quartz	.....
Alabandite	MnS	4.0
Alaskaite	$PbS \cdot Bi_2S_3$	7.0
Albertite	Asphaltum	1.1
Albite	$NaAlSiO_3$	2.6
Almandite	$Fe_3Al_2(SiO_4)_3$	4.0
Altaite	PbTe	8.2
Alunite	$K_2O \cdot 3Al_2O_3 \cdot 4SO_3 \cdot 6H_2O$	2.65
Alunogen	$Al_2(SO_4)_3 + 18H_2O$	1.7
Amalgam	Ag_xHg_y	14
Amblygonite	$Li(AlF)PO_4$	3.05
Amosite	$(Fe, Ca, H_2, Mn)O \cdot SiO_2$	2.25
Analcite	$NaAlSi_2O_6 + H_2O$	2.25
Andalusite	Al_2SiO_5	3.2
Andradite	$Ca_3Fe_2(SiO_4)_3$	3.85
Anglesite	$PbSO_4$	6.25
Anhydrite	$CaSO_4$	2.9
Ankerite	$CaCO_3 \cdot (Mg, Fe, Mn)CO_3$	3.0
Annabergite	$Ni_3As_2O_8 + 8H_2O$	.....
Anorthite	$CaAl_2Si_2O_8$	2.75
Anthophyllite	$(Mg \cdot Fe)SiO_3$	3.1
Anthracite	Hydrocarbon	1.3–1.8
Antimony	Sb(±As, Fe, Ag)	6.6
Apatite	$(Cl \cdot F)Ca_5(PO_4)_3$	3.2
Apophyllite	$H_7KCa_4(SiO_3)_8 + 4\,1/2H_2O$	2.35
Aragonite	$CaCO_3$	2.94
Argentite	Ag_2S	7.3
Arsenic	As	5.7
Arsenopyrite	FeAsS	6.0
Asbestos	See Sec 3	.....
Asphaltum	Liquid and solid hydrocarbon	1–1.8
Atacamite	$Cu_2(OH)_3Cl$	3.75
Augite	Pyroxene	.....
Aurichalcite	$2(Zn, Cu)CO_3 \cdot 3(Zn, Cu)(OH)_2$	3.6
Azurite	$2CuCO_3 \cdot Cu(OH)_2$	3.8
Baddeleyite	ZrO_2	5.8
Barite	$BaSO_4$	4.5
Bauxite	$Al_2O_3 \cdot 2H_2O$	2.55
Bentonite	SiO_2, Al_2O_3, Fe_2O_3, CaO, MgO	2.13
Beryl	$Be_3Al_2(SiO_3)_6$	2.7
Beryllonite	$NaBePO_4$	2.84
Biotite	$(H, K)_2(Mg, Fe)_2Al_2(SiO_4)_3$ [b]	2.9
Bismite	Bi_2O_3	4.4
Bismuth	Bi	9.8
Bismuthinite	Bi_2S_3	6.45
Bismutite	$(BiO)_2 \cdot CO_3 \cdot H_2O$	7.3
Blende	Sphalerite	.....
Boracite	$Mg_7Cl_2B_{16}O_{30}$	3
Borax	$Na_2B_4O_7 \cdot 10H_2O$	1.7
Bornite	$Cu_2S \cdot CuS \cdot FeS$	4.15
Bort	C	3.5
Bournonite	$PbCuSbS_3$	5.8
Braunite	$3Mn_2O_3 \cdot MnSiO_3$	4.8
Brochantite	$CuSO_4 \cdot 3Cu(OH)_2$	3.9
Bromyrite	AgBr	5.9
Brookite	TiO_2	3.9
Brucite	$Mg(OH)_2$	2.4
Calamine	$(ZnOH)_2 \cdot SiO_3$	3.45
Calaverite	$(Au \cdot Ag)Te_2$	9.0
Calcite	$CaCO_3$	2.71
Caliche	Soda niter	.....
Carbonado	C	3.5
Carnallite	$KCl \cdot MgCl_2 + 6H_2O$	1.6
Carnotite	$K_2O \cdot 2U_2O_3 \cdot V_2O_5 \cdot 3H_2O$	.....
Cassiterite	SnO_2	7.0
Celestite	$SrSO_4$	3.95
Cerargyrite	AgCl	5.55

Table 46. Composition and specific gravity of minerals—*Continued*

Mineral	Composition	Sp. gr.[a]
Cerussite	$PbCO_3$	6.5
Cervantite	Sb_2O_4	4.5
Chabazite	$(Ca, Na_2)Al_2Si_4O_{12} + 6H_2O$	2.1
Chalcanthite	$CuSO_4 \cdot 5H_2O$	2.2
Chalcedony	SiO_2	2.62
Chalcocite	Cu_2S	5.65
Chalcopyrite	$CuFeS_2$	4.2
Chalk	$CaCO_3$	.....
Chert	SiO_2	2.6
Chloanthite	$NiAs_2$	6.5
Chlorite	$H_4(Mg, Fe)_3Si_2O_9 + H_4(Mg, Fe)Al_2SiO_9$	2.9
Chromite	$FeCr_2O_4$	4.45
Chrysoberyl	$BeAl_2O_4$	3.7
Chrysocolla	$CuSiO_3 + 2H_2O$	2.1
Chrysolite	$(Mg \cdot Fe)_2SiO_4$	3.3
Chrysotile	$H_4Mg_3Si_2O_9$	2.22
Cinnabar	HgS	8.1
Clay	Kaolinite	.....
Cleiophane	Sphalerite	.....
Clinochlore	$4H_2O \cdot 5MgO \cdot Al_2O_3 \cdot 3SiO_2$	2.7
Coal	(C + H + O + N) varies	1–1.8
Cobaltite	$CoAsS$	6.15
Colemanite	$Ca_2B_6O_{11} \cdot 5H_2O$	2.4
Columbite	$(Fe, Mn)(Nb, Ta)_2O_6$ *h*	6.3
Copper	Cu	8.8
Coquimbite	$Fe_2(SO_4)_3 + 9H_2O$	2.1
Corundum	Al_2O_3	4.0
Covellite	CuS	4.6
Crocidolite	$NaFe(SiO_3)_2 \cdot FeSiO_3$	3.25
Crocoite	$PbCrO_4$	6.0
Cryolite	Na_3AlF_6	3.0
Cuprite	Cu_2O	6.0
Cyanite	$Al_2O_3 \cdot SiO_2$	3.6
Datolite	$Ca(BOH)SiO_4$	2.95
Descloizite	$4RO \cdot V_2O_5 \cdot H_2O$ *d*	6.0
Diamond	C	3.5
Diaspore	$Al_2O_3 \cdot H_2O$	3.4
Diatomite	SiO_2	.....
Diopside	Pyroxene	.....
Dolomite	$(Ca, MgCO_3)_2$	2.85
Domeykite	Cu_3As	7.5
Dufrenite	$FePO_4 \cdot Fe(OH)_3$	3.3
Dyscrasite	Ag_3Sb	9.65
Emerald	Beryl	.....
Emery	Corundum	.....
Enargite	Cu_3AsS_4	4.45
Enstatite	$MgSiO_3$	3.2
Epidote	$Ca_2(AlOH)Al_2(SiO_4)_3$	3.4
Epsomite	$MgSO_4 + 7H_2O$	1.7
Erythrite	$Co_3As_2O_8 \cdot 8H_2O$	2.95
Feldspar	See Sec. 3	.....
Ferberite	Wolframite	.....
Fergusonite	$R^{III}(Nb, Ta)O_4$ *f*	5.8
Flint	SiO_2	.....
Fluorite	CaF_2	3.1
Franklinite	$(Zn, Fe, Mn)O \cdot (Fe, Mn)_2O_3$	5.15
French chalk	Talc	.....
Fuller's earth	Smectite and kaolinite	2.0
Galena	PbS	7.5
Garnet	See Sec. 3	.....
Garnierite	$H_2(Ni \cdot Mg)SiO_4 + H_2O$	2.5
Gibbsite	$Al(OH)_3$	2.35
Gilsonite	Asphalt	1.07
Glauberite	$Na_2SO_4 \cdot CaSO_4$	2.8
Glauconite	$(K_2O)_2(Fe_2O_3)_y(H_2O)_z(SiO_2)_w$ *e*	2.3
Glaucophane	$NaAl(SiO_3)_2 \cdot (Fe, Mg)SiO_3$	3.1
Gold	$Au(\pm Ag, Cu, Fe)$	17.5
Göthite	$FeO(OH)$	4.2
Graphite	C	2.15

Table 46. Composition and specific gravity of minerals—*Continued*

Mineral	Composition	Sp. gr.[a]
Greenockite	CdS	5.0
Grossularite	$Ca_3Al_2(SiO_4)_3$	3.6
Gypsum	$CaSO_4 + 2H_2O$	2.32
Halite	$NaCl$	2.5
Halloysite	$H_4Al_2O_9 \cdot 2SiO_2 + H_2O$ [b]	2.1
Hambergite	$Be_2(OH)BO_3$	2.35
Hauynite	$Na_2Ca(Na_2SO_4 \cdot Al)Al_2Si_3O_{12}$	2.45
Helvite	$(Mn, Fe)_2(Mn_2S)Be_3(SiO_4)_3$	3.25
Hematite	Fe_2O_3	5.1
Hercynite	$FeAl_2O_4$	3.9
Herderite	$(CaF)BePO_4$	3.0
Hessite	Ag_2Te	8.6
Heulandite	$H_4CaAl_2Si_6O_{18} + 3H_2O$	2.2
Hornblende	$x(Ca(Mg, Fe)_2(SiO_3)_4) + y((Al, Fe)(F, OH)SiO_3)$	±3.2
Hübnerite	$MnWO_4$	6.8
Hydromagnesite	$3MgCO_3 \cdot Mg(OH)_2 + 3H_2O$	2.15
Hydrozincite	$ZnCO_3 \cdot 2Zn(OH)_2$	3.7
Hypersthene	$(Fe, Mg)SiO_3$	3.45
Ilmenite	$FeTiO_3$	4.75
Infusorial earth	SiO_2	.....
Iodobromite	$2AgCl \cdot 2AgBr \cdot AgI$	5.7
Iodyrite	AgI	5.6–5.7
Iridium	$Ir(\pm Pt, Os, Rh, Ru, etc.)$	22.7
Iridosmine	$Ir, Os(\pm Rh, Pt, Ru, etc.)$	20
Iron	$Fe(+Ni, Co, Cu, C, SiO_2)$	7.5
Jadeite	$NaAl(SiO_3)_2$	3.33
Jamesonite	$2PbS \cdot Sb_2S_3$	5.8
Jarosite	$K_2O \cdot 3Fe_2O_3 \cdot 4SO_3 \cdot 6H_2O$ [l]	.....
Jasper	Quartz	.....
Kainite	$MgSO_4 \cdot KCl + 3H_2O$	2.1
Kalinite	$K_2SO_4 \cdot Al_2(SO_4)_3 + 24H_2O$	1.75
Kaolinite	$H_4Al_2Si_2O_9$	2.6
Kermesite	Sb_2S_2O	4.5
Kyanite	Cyanite	.....
Lanthanite	$La_2(CO_3)_3$	2.6
Lapis-lazuli	Lazurite	.....
Laumontite	$H_4CaAl_2Si_4O_{14} + 2H_2O$	2.3
Lazulite	$2AlPO_4 \cdot (Fe, Mg)(OH)_2$	3.0
Lazurite	$Na_4(NaS_3 \cdot Al)Al_2Si_3O_{12}$	2.4
Lepidolite	$KLi[Al(OH, F)_2]Al(SiO_3)_3$	2.85
Leucite	$KAl(SiO_3)_2$	2.5
Libethenite	$Cu_2P_2O_8 \cdot Cu(OH)_2$	3.7
Limonite	$2Fe_2O_3 \cdot 3H_2O$	3.8
Linarite	$(Pb, Cu)SO_4 \cdot (Pb, Cu)(OH)_2$	5.4
Linnaeite	$Co_3S_4(\pm Fe, Cu)$	4.9
Livingstonite	$HgS \cdot 2Sb_2S_3$	4.8
Löllingite	$FeAs_2$	7.2
Magnesite	$MgCO_3$	3.05
Magnetite	Fe_3O_4	5.17
Malachite	$CuCO_3 \cdot Cu(OH)_2$	4.0
Maltha	Asphalt	.....
Manganite	$Mn_2O_3 \cdot H_2O$	4.3
Marcasite	FeS_2	4.9
Marmatite	$xFeS \cdot yZnS$	3.9
Martite	Fe_2O_3	4.9
Meerschaum	Sepiolite	.....
Melaconite	CuO	±6.0
Meliphanite	$NaCa_2Be_2FSi_2O_{10}$	3.0
Mica	See Sec. 3	.....
Microcline	$KAlSi_3O_8$	2.55
Microlite	$Ca_2Ta_2O_7$	5.5
Millerite	NiS	5.5
Mimetite	$(PbCl)Pb_4As_3O_{12}$	7.1
Mispickel	Arsenopyrite	.....
Molybdenite	MoS_2	4.8
Molybdite	MoO_3	4.5
Monazite	$(Ce, La)PO_4$	5.1
Montmorillonite	$H_2Al_2Si_4O_{12} + nH_2O$	.....
Mottramite	$(Pb, Cu)_3V_2O_8 \cdot 2(Pb, Cu)(OH)_2$	5.9

Table 46. Composition and specific gravity of minerals—*Continued*

Mineral	Composition	Sp. gr.[a]
Muscovite	$H_2KAl_3(SiO_4)_3$	2.9
Natrolite	$Na_2Al_2Si_3O_{10} + 2H_2O$	2.2
Natron	$Na_2CO_3 + 10H_2O$	1.45
Nephelite	$NaAlSiO_4$	2.6
Niccolite	NiAs	7.5
Niter	KNO_3	2.1
Ocher	Powdery $Fe_2(OH)_6 \cdot Fe_2O_3$	±4
Octahedrite	TiO_2	3.9
Oligoclase	Feldspar; see Sec. 3	
Olivine	$(Mg, Fe)_2SiO_4$	3.3
Opal	SiO_2	2.1
Orpiment	As_2S_3	3.45
Orthoclase	$KAlSi_3O_8$	2.5
Osmiridium	Iridosmine	
Ozocerite	Hydrocarbon	0.9
Palladium	Pd(±Pt, Ir)	11.5
Pentlandite	(Fe, Ni)S	4.8
Perovskite	$CaO \cdot TiO_2$	3.95–4.1
Petzite	$(Ag, Au)_2Te$	8.9
Phenacite	Be_2SiO_4	3.0
Phlogopite	$(H, K, MgF)Mg_3Al(SiO_4)_3$	2.8
Phosphorite	Apatite	
Picotite	$(Mg, Fe)O \cdot (Al, Cr)_2O_3$	4.1
Plagioclase	Albite; anorthite	
Platinum	Pt(±Fe, Ir, Os, etc.)	17
Pleonaste	Spinel	
Polybasite	$(Ag, Cu)_{16}Sb_2S_{11}$	6.1
Polycrase	$R^{III}(NbO_3)_3 \cdot 2R^{III}(TiO_3)_3 \cdot 3H_2O$ *f*	5.0
Polyhalite	$2CaSO_4 \cdot MgSO_4 \cdot K_2SO_4 + 2H_2O$	2.78
Prehnite	$H_2Ca_2Al_2Si_3O_{12}$	2.9
Proustite	Ag_3AsS_3	5.6
Psilomelane	H_4MnO_5 *b*	4.2
Pyrargyrite	Ag_3SbS_3	5.8
Pyrite	FeS_2	5.0
Pyrochlore	$R(Nb_2O_6) \cdot R(Ti, Th)O_3$ *n*	4.3
Pyrolusite	MnO_2	4.8
Pyromorphite	$Pb_5Cl(PO_4)_3$	6.8
Pyrope	$Mg_3Al_2(SiO_4)_3$	3.7
Pyrophyllite	$HAl(SiO_3)_2$	2.85
Pyroxene	$Ca(Mg, Fe)(SiO_3)_2$	3.3
Pyrrhotite	$Fe_{11}S_{12}$	4.6
Quartz	SiO_2	2.65
Realgar	AsS	3.56
Rhodochrosite	$MnCO_3$	3.5
Rhodonite	$MnSiO_3$	3.6
Roscoelite	$H_3K(Mg, Fe)(Al, V)_4(SiO_3)_{12}$	2.9
Ruby	Corundum	
Rutile	TiO_2	4.2
Samarskite	$R_3^{II}R_2^{III}(Nb, Ta)_6O_{21}$ *g*	
Sapphire	Corundum	
Sassolite	$B(OH)_3$	1.48
Scheelite	$CaWO_4$	6.0
Senarmontite	Sb_2O_3	5.3
Sepiolite	$H_4Mg_2Si_3O_{10}$	2
Sericite	Mica; see Sec. 3	2.6
Serpentine	$H_4Mg_3Si_2O_9$	
Siderite	$FeCO_3$	3.85
Silex	Quartz	
Sillimanite	Al_2SiO_5	3.23
Silver	Ag(±Au, Cu, Pt, Sb, Bi, Hg)	10.6
Smaltite	$CoAs_2$	6.5
Smithsonite	$ZnCO_3$	4.4
Sodalite	$Na_4(AlCl)Al_2Si_3O_{12}$	2.2
Sperrylite	$PtAs_2$	10.6
Sphalerite	ZnS	4.0
Sphene	Titanite	
Spinel	$MgAl_2O_4$	3.8
Spodumene	$LiAl(SiO_3)_2$	3.15
Stannite	Cu_2FeSnS_4	4.5

Table 46. Composition and specific gravity of minerals—*Continued*

Mineral	Composition	Sp. gr.*a*
Staurolite	$H_4(Fe, Mg)_6(Al, Fe)_{24}Si_{11}O_{66}$ *b*	3.7
Steatite	Talc	.....
Stephanite	Ag_5SbS_4	6.2
Sternbergite	$AgFe_2S_3$	4.2
Stibiconite	$Sb_2O_4 \cdot H_2O$	5.2
Stibnite	Sb_2S_3	4.55
Stilbite	$H_4(Na_2Ca)Al_2Si_6O_{18} + 4H_2O$	2.15
Stromeyerite	$(Ag, Cu)_2S$	6.2
Strontianite	$SrCO_3$	3.7
Sulphur	S	2.08
Sylvanite	$(Au, Ag)Te_2$	8.1
Sylvite	KCl	1.98
Talc	$H_2Mg_3(SiO_3)_4$	2.7
Tantalite	$(Fe, Mn)(Nb, Ta)_2O_6$ *l*	.....
Tennantite	$Cu_3As_2S_7$	4.46
Tenorite	CuO	6.0
Tephroite	Mn_2SiO_4	4.1
Tetradymite	$Bi_2(Te, S)_3$	7.4
Tetrahedrite	$Cu_3Sb_2S_7$	4.8
Thorite	$ThSiO_4$	4.6
Thuringite	$8FeO \cdot 4(Al, Fe)_2O_3 \cdot 6SiO_2 \cdot 9H_2O$	3.17
Tin	Sn	6.5
Titanite	$CaSiTiO_5$	3.5
Topaz	$Al_2F_2SiO_4$	3.5
Tourmaline	$R_9Al_3B_2(OH)_2Si_4O_{19}$ *c*	3.1
Tremolite	$CaMg_3(SiO_3)_4$	3.0
Tridymite	SiO_2	2.3
Triplite	$(RF)RPO_4$ *j*	3.6
Trona	$Na_2CO_3 \cdot HNaCO_3 + 2H_2O$	2.1
Tungstite	WO_3	.....
Turquoise	$AlPO_4 \cdot Al(OH)_3 + H_2O$	2.7
Ulexite	$NaCaB_5O_9 \cdot 8H_2O$	1.65
Ullmannite	NiSbS	6.4
Uraninite	Uranate, largely Pb	9.4
Uvarovite	$Ca_3Cr_2(SiO_4)_3$	3.46
Valentinite	Sb_2O_3	5.6
Vanadinite	$(PbCl)Pb_4V_3O_{12}$	7.0
Vermiculite	See Sec. 3	.....
Vesuvianite	$H(OH)_3Ca_{12}(Al, Fe)_6(SiO_4)_{10}$	3.4
Vivianite	$Fe_3P_2O_8 + 8H_2O$	2.65
Wad	Psilomelane	±3.6
Wavellite	$4AlPO_4 \cdot 2Al(OH)_3 + 9H_2O$	2.32
Willemite	Zn_2SiO_4	4.1
Witherite	$BaCO_3$	4.3
Wöhlerite	$12(CaNa_2)(SiZr)O_3 \cdot (CaNa_2)Nb_2O_6$ *m*	3.42
Wolframite	$(Fe, Mn)WO_4$	7.4
Wollastonite	$CaSiO_3$	2.85
Wulfenite	$PbMoO_4$	6.9
Wurtzite	ZnS	3.98
Yttrialite	$R_2O_3 \cdot 2SiO_2$ *k*	4.6
Zincite	ZnO	5.6
Zircon	$ZrSiO_4$	4.7
Zoisite	$HCa_2Al_3Si_3O_{13}$	3.3

a Average.
b Approximate.
c R = Fe, Mg and the alkalies.
d R = Pb, Zn chiefly, usually about 1 : 1.
e Proportions highly variable.
f R^{III} = Yt, Er, Ce, U.
g R^{II} = Fe, $CaUO_2$; R^{III} = Ce, Yt.
h Nb predominating.
i Ta predominating.
j R = Fe, Mn, Ca, Mg.
k Th- and Yt-group metals chiefly.
l Pb and Ag frequently either a part of the mineral or in mineral forms closely associated.
m Ca : Na_2 = nearly 4 : 1.
n R = Ce, Ca, Ti, Th principally.

Table 47. Abbreviations used in text

AC	American Cyanamid Co.
A-C	Allis-Chalmers Mfg. Co.
a-c.	Alternating current.
ACI	Annealed cast iron.
addl.	Additional.
amp.	Ampere.
approx.	Approximate.
Art.	Article.
asst.	Assistant.
A.T.	Assay ton.
atm.	Atmosphere.
auto.	Automatic.
aver.	Average.
bbl.	Barrel.
bd. ft.	Board-feet.
Bé.	Baumé.
b. hp.	Boiler horsepower.
b. hp.	Brake horsepower.
B.M.	Board measure.
b.p.	Boiling point.
B.P.L.	Bone phosphate of lime.
B.t.u.	British thermal units.
C.	Centigrade.
°C.	Degrees Centigrade.
cal.	Calorie.
capac.	Capacity.
CAS	Cast alloy steel.
CC	Closed circuit.
cc.	Cubic centimeter(s).
CCI	Chilled cast iron.
CF	Composite feed.
c.f.	Cubic foot (feet).
c.f.m.	cubic feet per minute.
c.g.	Center of gravity.
c.g.s.	Centimeter-gram-second.
CI	Cast iron.
c.i.f.	Cost, insurance, freight.
circ.	Circulating.
CO	Classifier overflow.
col.	Column.
conc.	Concentrate.
concn.	Concentration.
conv.	Conveyor.
corp.	Corporation.
cp.	Centipoise.
c-p.	Candle-power.
C.P.	Chemically pure.
Cr	Chrome steel.
Cr-Mo	Chrome-molybdenum steel.
Cr-Ni	Chrome-nickel steel.
CS	Cast steel.
CSS	Cast semi-steel.
c. to c.	Center to center.
cts.	Cents.
cu. ft.	Cubic foot (feet).
cum.	Cumulative.
cyd.	Cubic yard.
cyl.	Cylinder.
da.	Day.
d-c.	Direct current.
DC	Dorr classifier.
dcm.	Decimeter.
deg. F.	Degree Fahrenheit.
diag.	Diagonal.
diam.	Diameter.
dir.	Direct.
distrib.	Distribution.
do.	Ditto.
dr.	Dram.
dwt.	Pennyweight.
ea.	Each.
effic.	Efficiency.
Eq.	Equation.
F.	Fahrenheit.
f.a.s.	Free alongside (ship).
fgt.	Freight.
Fig.	Figure.
flot., flotn.	Flotation.
f.o.b.	Free on board.
f.p.m.	Feet per minute.
f.p.s.	Feet per second.
f.p.s.p.s.	Feet per second per second.
FS	Forged steel.
ft.	Feet.
gal.	Gallons.
gen'l	General.
gm.	Gram.
g.p.h.	Gallons per hour.
g.p.cyd.	Gallons per cubic yard.
g.p.m.	Gallons per minute.
g.p.t.	Gallons per ton.
gr.	Grain.
griz.	Grizzly.
gyr.	Gyratory.
H	Hardness
HCS	High-carbon steel.
Hf	Hard-faced; hard-surfaced.
hgt.	Height.
hp.	Horsepower.
hp-day	Horsepower-day.
hp-hr.	Horsepower-hour.
hp-mo.	Horsepower-month.
hr.	Hour.
I&A	Iron and aluminum.
I.B.P.	Initial boiling point.
I.D.	Inside diameter.
in.	Inch.
incl.	Including.
in. per ft., i.p.f.	Inches per foot.
insol.	Insoluble.
int.	Intermediate.
kg.	Kilogram.
kg-cal.	Kilogram-calorie.
km.	kilometer.
kva., k.v.a., kv-a.	Kilovolt-ampere(s).
kw.	Kilowatt.
kw-hr.	Kilowatt hour.
lb.	Pound.
li.	Liter.
lin.	Linear.
M	Mark.
m.	Mesh.
ma.	Milliampere.
man-hr.	Man hour.
mat'l	Material.
max.	Maximum.

Table 47. Abbreviations used in text—*Continued*

MBI	Metals Beneficiation, Inc.
M.B.M.	Thousand board feet.
Md	Manganoid.
mg.	Milligram.
mgr.	Manager.
mi.	Mile.
min.	Minute, minimum.
misc.	Miscellaneous.
mm.	Millimeter(s).
mo.	Month.
mog	Mesh-of-grind.
M.P.	Melting point.
m.p.r.	Minutes per revolution.
M-S	Minerals separation.
MW	Multiple wave.
N.A.	Numerical aperture.
negl.	Negligible.
no.	Number.
OC	Open circuit.
O.D.	Outside diameter.
orig.	Original.
oz.	Ounce.
pf.	Power factor.
Pl.	Plate.
p.p.m.	Parts per million.
prim.	Primary.
prod.	Product.
p.s.i.	Pounds per square inch.
pulv.	Pulverized.
rd.	Round.
recip.	Reciprocal.
recl.	Reclaimed.
regr.	Regrind.
retreat.	Retreatment.
rev.	Revolutions.
Rm.	Reichsmark.
r.o.m.	Run-of-mine.
r.p.h.	Revolutions per hour.
r.p.m.	Revolutions per minute.
r.p.s.	Revolutions per second.
R.R.	Railroad.
scav.	Scavenger.
scr.	Screen.
Sec.	Section.
sec.	Second.
sp. gr. spec. grav.	Specific gravity.
sp. ht.	Specific heat.
spig.	Spigot.
s.p.m.	Strokes per minute.
sq. ft.	Square foot (feet).
sq. in.	Square inch(es).
sq. mi.	Square mile(s).
sq. mm.	Square millimeter(s).
std.	Standard.
stl.	Steel.
sup't	Superintendent.
susp.	Suspended.
symbols	
>	Retained on; greater than; larger than.
<	Passing; less than; smaller than.
~	Ranging between.
@	At; of the size or description following.
syn.	Synthetic.
temp.	Temperature.
TFS	Tempered forged steel.
theor.	Theoretical.
t.p.d.	Tons per day.
t.p.h.	Tons per hour.
t.p.m.	Tons per minute.
tr.	Trace.
TS	Tool steel.
v.	Volt.
veloc.	Velocity.
vert.	Vertical.
vib.	Vibration(s).
vol.	Volume.
v.p.m.	Vibrations per minute.
WB	Wedge bar.
wgt.	Weight.
WhI	White iron.
wk.	Week.
wt.	Weight.
yd.	Yard.
yr.	Year.

Table 48. Abbreviations used in literature citations

References to articles in periodicals are written in the order: volume number, name or abbreviation for name of periodical, page number; thus *100 J 110* is to be read, Engineering and Mining Journal, vol. 100, page 110. References to books are by name, abbreviation, or by author's name in italics, the distinctions being based largely on frequency of reference and danger of confusion. An alphabetical list of the abbreviations of book and periodical names used follows.

A	American Institute of Mining & Metallurgical Engineers.
Aa	Australasian Institute of Mining & Metallurgy (new series).
AC	American Cyanamid Co.
ABMS	American Bureau of Metal Statistics, N. Y.
ACerS	Journal of the American Ceramic Society.
ACS	Journal of the American Chemical Society.
Adam	Physics and chemistry of surfaces, Neil K. Adam, Oxford, Clarendon Press, 1930.
AES	American Electrochemical Society.
AIChE	American Institute of Chemical Engineers.
AIM	American Institute of Metals.
AIME	American Institute of Mining & Metallurgical Engineers.
AJS	American Journal of Science.
Alden	Design of industrial exhaust systems, John L. Alden, Industrial Press, N. Y., 1939.
Am. I. & S. Inst.	American Iron & Steel Institute.
AP	Journal of Applied Physics.
ASA	American Standards Association.
ASCE	Proceedings of the American Society of Civil Engineers.
ASM	Transactions American Society of Metals.
ASME	Transactions American Society of Mechanical Engineers.
ASTM	American Society for Testing Materials.
AZI	American Zinc Institute Journal.
Ber	Berichte.
Bowie	A practical treatise on hydraulic mining in California, A. J. Bowie, Jr., D. Van Nostrand Co., 1905.
Bray	Non-ferrous production metallurgy, J. L. Bray, John Wiley & Sons, 1941.
BSTJ	Bell System Technical Journal.
Bul	Bulletin.
C	Combustion.
CA	Coal Age.
CAL	Chemical Age, London.
CE	Colliery Engineering.
CEG	Conclusions from experiments in grinding, W. H. Coghill and F. D. de Vaney, Bul, Sept. 1938, Technical Series, Missouri School of Mines and Metallurgy.
CEMR	Chemical Engineering & Mining Review.
CENY	Civil Engineering, N. Y.
CerS	Ceramic Society, London.
CG	Colliery Guardian.
ChA	Chemical Abstracts.
CI	Chemistry & Industry.
CIE	Cornish Institute of Engineers.
CIMM	Transactions Canadian Institute of Mining & Metallurgy.
CLM	Cement & Lime Manufacture.
CM	Chemical Markets.
CMB	Canadian Department of Mines & Resources, Mines & Geology Branch, Bureau of Mines Report.
CME	Chemical & Metallurgical Engineering.
CMI	Transactions Canadian Mining Institute.
CMJ	Canadian Mining Journal.
Coll. Eng.	Colliery Engineering.
CSMM	Colorado School of Mines Magazine.
CSMQ	Colorado School of Mines Quarterly.
Ct	Concrete.
CU	Columbia University.
CvE	Civil Engineering.
D	Discussion.
Dana	System of mineralogy, J. N. Dana, John Wiley & Sons, 1903; Textbook of mineralogy, Dana and Ford (W. E.), John Wiley & Sons, 1922.
DECO	Denver Equipment Co.
Dorr	Cyanidation and concentration of gold and silver ores, J. V. N. Dorr, McGraw-Hill Book Co., 1936.
E	Engineering.
Ed. 1	Edition 1, Handbook of Ore Dressing, Arthur F. Taggart, John Wiley & Sons, 1927.
EE	Electrical Engineering.
EG	Economic Geology.
EL	Engineering, London.
EN	Engineering News; Engineering News-Record.
Eng.	Engineering, N. Y.
ER	Electrical Review.
EW	Electrical World.
F	Flotation, A. M. Gaudin, McGraw-Hill Book Co., 1932.
FMQ	Foreign Minerals Quarterly.
G or *Gl*	Glückauf.
GSA	Geological Survey of Alabama.
GSSAf	Geological Survey of South Africa.
Hahn	Applied radio-chemistry, Otto Hahn, Cornell University Press, 1936.
Hammett	Solutions of electrolytes, L. P. Hammett, McGraw-Hill Book Co., 1936.

Table 48. Abbreviations used in literature citations—*Continued*

Hayward	An outline of metallurgical practice, C. R. Hayward, D. Van Nostrand Co., 1940.
Hetzel	Belt conveyors and belt elevators, F. V. Hetzel, John Wiley & Sons, 1922.
Hoover	Concentrating ores by flotation, T. J. Hoover, Mining Magazine, London, 1916.
HPAC	Heating, Plumbing, and Air-conditioning.
HS	Hollinger Staff.
HV	Heating and Ventilation
IBMG	Idaho Bureau of Mines and Geology.
IC	Information Circular, U. S. Bureau of Mines.
ICE	Institution of Chemical Engineers.
ICh	Industrial Chemist.
IEC	Industrial & Engineering Chemistry.
IECA	Industrial & Engineering Chemistry, Analytical Edition.
IME	Transactions Institute of Mining Engineers.
IMeE	Institute of Mechanical Engineers.
IMI	Proceedings Illinois Mining Institute.
IMM	Institution of Mining & Metallurgy, Transactions.
IMR	Industrial Minerals and Rocks, AIME.
J	Engineering & Mining Journal.
Janin	Bulletin 127, United States Bureau of Mines.
JCM	Journal of the Chemical, Mining & Metallurgical Society of South Africa.
JFI	Journal of the Franklin Institute.
JG	Journal of Geology.
JIF	Journal of the Institute of Fuel.
Johannsen	Manual of petrographic methods, Albert Johannsen, McGraw-Hill Book Co., 1918.
JPC	Journal of Physical Chemistry.
JPCR	Scientific Papers, Institute of Physical & Chemical Research, Tokyo.
JSAIE	Journal of the South African Institute of Engineers.
Julian, Smart, and Allen	Cyaniding gold and silver ores, H. Forbes Julian and Edgar Smart; 3rd ed., J. B. Lippincott Co.
KB	Kolloid-Beihefte.
KC	Kolloid Chemie
Ketchum	The design of walls, bins, and grain elevators, Milo S. Ketchum, McGraw-Hill Book Co., 1919.
Kidder	The architects' and builders' handbook, F. E. Kidder and Harry Parker, John Wiley & Sons, 1935.
KZ	Kolloid Zeitschrift.
Ladoo	Non-metallic minerals, Raymond B. Ladoo, McGraw-Hill Book Co., 1925.
Liddell	Handbook of nonferrous metallurgy, McGraw-Hill Book Co., 1926.
Louis	The dressing of minerals, Henry Louis, Arnold, London, 1909.
LSMI	Proceedings Lake Superior Mining Institute.
LSS	Lake Shore Staff.
LVS	Landwirtschaftlichen Versuchsstationen.
Marks	Mechanical engineers' handbook, L. S. Marks, McGraw-Hill Book Co., 1916.
MCJ	Mining Congress Journal.
MCR	Mining & Contracting Review.
ME	Metall und Erz.
Mellor	A comprehensive treatise on inorganic and theoretical chemistry, J. W. Mellor, Longmans, Green & Co.
Merriman	Mechanics of materials, Mansfield Merriman, John Wiley & Sons, 1906.
MEW	Mining & Engineering World.
MH	Mines Handbook, W. H. Weed, The Mines Handbook Co., Annual.
MI	Mineral Industry.
Miller	Crushers for stone and ore, W. T. W. Miller, Mining Publications, Ltd., London, 1935.
MIMM	Mexican Institution of Mining & Metallurgy.
MJ	Mining Journal, London.
MJA	Mining Journal of Arizona.
MM	Mining Magazine.
M&M	Mines & Minerals.
MMC	Mines Magazine, Colorado School of Mines.
MMt	Mining & Metallurgy.
MoMM	Missouri School of Mining & Metallurgy.
MQE	Mine & Quarry Engineering.
MR	Mineral Resources.
MSM	Minnesota School of Mines.
MT	Mining Technology, AIME.
Murdoch	Microscopical determination of the opaque minerals, Jos. Murdoch, John Wiley & Sons, 1916.
MW	Mining World.
MY	Minerals Yearbook, U. S. Bureau of Mines.
N	Nature.
NACA	National Advisory Committee for Aeronautics.
NS	New Series.
OD	Ore dressing, R. H. Richards, McGraw-Hill Book Co., 1908.
OD Notes	Ore dressing notes, American Cyanamid Co.
P	Mining & Scientific Press.
Paneth	Radio elements as indicators, Fritz Paneth, McGraw-Hill Book Co., 1928.
Pat	Patent.
PC	Private communication.

Table 48. Abbreviations used in literature citations—*Continued*

Peele	Mining Engineers' Handbook, Robert Peele, 3rd ed., John Wiley & Sons, 1941.
Perry	Chemical Engineers' Handbook, J. H. Perry, McGraw-Hill Book Co., 1941.
PF	Principles of flotation, Ian W. Wark, Australasian Institute of Mining & Metallurgy, Melbourne, 1938.
Phys	Physik
PMD	Principles of mineral dressing, A. M. Gaudin, McGraw-Hill Book Co., 1939.
PP	Professional Paper.
PQ	Pit & Quarry.
PQH	Pit & Quarry Handbook.
PreP	Preprint.
PTJ	Paper Trade Journal.
Q	Questionnaire.
RI	Reports of Investigations, U. S. Bureau of Mines.
Richards	Textbook of ore dressing, R. H. Richards, McGraw-Hill Book Co., 1909.
RIM	Revue de l'Inde Minerale
Rittinger	Lehrbuch der aufbereitungskunde, P. Ritter von Rittinger, Ernst and Korn, Berlin, 1867.
RMP	Rand Metallurgical Practice, Various authors, Chas. Griffin & Co., Ltd., 1926.
Rogers	Study of minerals, Austin Flint Rogers, McGraw-Hill Book Co., 1912.
Rose	The metallurgy of gold, Sir Thomas Kirke Rose and W. A. C. Newman, rev., J. B. Lippincott Co., Philadelphia, 1937.
Rose and Newman. See *Rose.*	
RP	Rock Products.
RSI	Review of Scientific Instruments.
SAMEJ	South African Mining & Engineering Journal.
SCI	Journal of the Society of Chemical Industry.
SCW	State College of Washington.
Smart	Cyaniding gold and silver ores, Julian, Smart, and Allen, J. B. Lippincott Co., Philadelphia, 1921.
SMQ	School of Mines Quarterly, Columbia University.
Spurr and Wormser	The marketing of metals and minerals, J. E. Spurr and F. E. Wormser, McGraw-Hill Book Co., 1925.
SuE	Stahl und Eisen.
TAIEE	Transactions American Institute of Electrical Engineers.
TB	Textbook of ore dressing, R. H. Richards and C. E. Locke, McGraw-Hill Book Co., 1925.
T Bul	Technical Bulletin.
TP	Technical paper.
Trautwine	Civil Engineers' pocket-book, J. C. Trautwine, Trautwine Publishing Co., 1919.
Tref	Deco Trefoil.
Truscott	A textbook of ore dressing, S. J. Truscott, Macmillan Co., 1923.
UI	University of Illinois, Engineering Experiment Station.
UId	University of Idaho, Pamphlets of the U. S. Bureau of Mines and the Idaho Department of Mines & Geology.
UM	University of Minnesota.
US	United States.
USBM	U. S. Bureau of Mines.
USBS	U. S. Bureau of Standards.
USGS	U. S. Geological Survey.
USPH	U. S. Public Health.
UU	University of Utah.
UW	University of Washington.
Van Wagenen	Manual of hydraulic mining, T. F. Van Wagenen, D. Van Nostrand Co., 1913.
Wiard	The theory and practice of ore dressing, E. S. Wiard, McGraw-Hill Book Co., 1915.
Wilson	Hydraulic and placer mining, E. B. Wilson, John Wiley & Sons, 1918.
Wimmler	Placer-mining methods and costs in Alaska, by Norman L. Wimmler, Bulletin 259, USBM, 1927.
Z	Zement.
Z anorg C	Zeitschrift anorganische Chemie.
ZP	Zeitschrift Physik.
ZPC	Zeitschrift für physikalische Chemie.
ZvDI	Zeitschrift für deutschen Ing.

INDEX

Note: The double folios refer to both section and page numbers. For example, 13–09 indicates page 09 of Section 13.

Abbreviations, 22–72, 74
Aberfoyle Mining Co., 11–11
Aberration of lenses, 19–74
Abrasives, 3–01 to 03
  grinding, 6–01
  production, 1–02; 3–02
AC reagents, 12–08, 10, 11, 13, 45, 46
Acetylene, 12–35
Acetylene tetrabromide, 19–151
Acid, conditioning with, 12–25, 29
  depressant, 12–24
  in amalgamation, 14–16
Actinolite, pneumatic concentration, 11–139
Activated earth, 3–36
Activation, accidental, 12–24
  by metallic ions, 12–33
  by oxidation, 12–33
  by reduction, 12–34
  definition, 12–03, 19
  flotation, 12–20 to 23; *see also* ***Conditioning***
  place of, 12–88
  resurfacing, 12–22
    prevention, 12–23
Adams, density controller, 3–32; 8–60
  reagent feeder, 12–90
Adelong Gold Estates, 2–89
Adsorption, methods of surface determination, 19–130
  of frothing agents, 12–41
Aeration, by agitation, 12–75
  for oxidation, 12–33
  impellers, 12–81
  in bubble-column cells, 12–79
Aerial tramway, 2–192; 20–08, 10
Aerofloat, 12–09
  frothing with, 12–09, 45
  quantity required, 12–10
  trade numbers, 12–09
  utility, 12–09, 87
Aerosols, 9–06
Afterthought Copper Co., 16–16
Agitair flotation machine, 12–71
  cost and weight, 20–86
  performance, 2–40
Agitation, cement raw mix, 3A–13, 39
  cost, 2–103
  floor area for, 20–48
  -froth flotation, 12–75
Ainlay bowl, 11–135
Air, classification; *see Air, sizing with; see also* **cement flowsheets, 3A–29 to 42**
  ducts, 9–22
  flow, 9–21 to 25; 20–74
  piping for suction lines, 20–74
  properties of saturated, 17–04
  sizing with, 9–29 to 37
    commercial classifiers, 9–32
    definition, 9–01
    fan speeds, 9–37
    floating velocity, 9–32
    flowsheets, 9–31
Air, sizing with, forms of apparatus, 9–30
    installations, 6–26 to 44
    Martin's analogy, 9–01
    particle movement, 9–01
    settling velocities, 9–02, 05
    temperature, 9–32
  viscosity, 9–22
Air Barbar, 13–25
Airbrush, 20–47
Air-float table, 11–137
Air-lift, 18–92 to 97
  air consumption, 18–93
  efficiency, 18–94
  flotation machines, 12–58 to 61
  installations, 20–40
  pressure, 18–93
  submergence, 18–92
  utility, 18–95; 20–52
Air-quicksand, 11–04, 139
Air-swept mills, 6–07 to 11, 22, 26 to 43
Air transport of solids, *see* ***Pneumatic conveying***
Ajo, *see New Cornelia*
Akins classifier, 8–14 to 19
Alabama, brown-ore washing plant, 2–147
Alabaster, 3–40
Alan Wood Steel Co., 2–145; 4–65
Alaska-Gastineau Mining Co., building, 20–44
  crushing, 4–27, 65, 66
  launders, 18–69, 76
  location of mill, 20–02
  ore, 20–02
  sampling, 19–55
  screening, 7–22, 26
  shops, 20–44
  skips, 20–52
  storage, 20–11
  tabling, 11–64, 79
  thickening, 15–13
  vanners, 11–92
  water, 20–15
Alaska Gold Mining Co., 19–45
Alaska-Juneau Gold Mining Co., 2–120
  amalgamation, 14–20
  flotation, 12–24, 72
  hand sorting, 14–05, 06
Alaska Treadwell Gold Mining Co., 4–60, 90; 13–36
Alberene Stone Corp., 3–121
Albumin, 12–33
Alcohol, amyl, 12–45
  frothers, 12–45
Aldermac Copper Corp., 2–56
  building, 20–45
  classifying, 8–09, 16
  crushing, 4–16, 48, 49
  filtration, 16–09, 10, 12
  flotation, 12–33, 99, 106, 114
  grinding, 5–56, 57
  thickening, 15–16
Aldoximes, 12–16

Algebra, 21–06 to 20
binomial theorem, 21–15
chance, 21–14
combinations, 21–14
complex numbers, 21–16
determinants, 21–13
equations, 21–09 to 13
exponents, 21–14
factoring, 21–08
fractions, 21–08
fundamental operations, 21–07
graphical solution of equations, 21–10
imaginary numbers, 21–16
interpolation, 21–15
permutations, 21–14
probability, 21–15
progressions, 21–15
remainder theorem, 21–11
roots, 21–09, 12, 13
solution by trial, 21–11
synthetic division, 21–11
Algonquin Mine, 13–25
Alice mill (A. S. & R. Co.), 2–121; 12–104
Alignment charts, 21–60
Alkali, 12–29
addition, 12–31
depressant, 12–24, 30
in amalgamation, 14–16, 19
in thickening, 15–07, 08, 19
Allen, cone, 8–38
equation for settling velocity, 9–01, 02
Allenby mill, 12–59, 95
Allentown Portland Cement Co., 3A–26
Alpha Cement Co., 6–44
Alte Hütte mill, 2–148
Alum, flocculant, 15–06, 08
grinding, 6–05, 08
Alumina, 3–87
Aluminum, 2–18
grinding, 6–01, 26
ion, 12–34
nitrate, in flotation, 12–26
oxide, grinding, 6–26
production, 1–02; 2–18
selling, 2–264
sulphate, coagulant, 20–39
in flotation, 12–26
Aluminum Ore Co., 5–103
Alundum, grinding, 6–26
Alunite, flotation, 12–120
grindability, 6–46
Amalgam, jigging, 11–25; *see also Amalgamation*
Amalgamation, 14–10 to 23
amalgams, 14–11
barrel, 2–117, 123; 14–19
centrifugal, 14–18
chemistry of, 14–10
clean-up, 14–17
cost, 2–99; 14–22
dressing plates, 14–14, 16
electrolytic, 14–17
feed size, 14–17
gold-pan, 11–56; 14–18
heat in, 14–17
in grinding circuit, 5–104
laboratory tests, 19–187
mercury losses, 2–90; 14–15, 22
of flotation pulp, 14–15
pan, 2–132; 14–20
plants, 2–98 to 102, 131; 11–92
plate amalgamation, 14–12 to 17
principles, 14–10
pulp density, 14–17
recovery, 14–22
Amalgamation, retorting, 14–21
riffle, 11–96, 103; 14–18
sickening, 14–14
staining, 14–16
table, 2–90
trap, 14–18
vs. blanket tables, 11–133
Amblygonite, flotation, 12–13
grinding, 6–26
American Agricultural Chemical Corp., 3–74
electrostatic separation, 13–47
stockpiling, 18–25
American Cyanamid Co., 8–50
American dredge, 2–94
American filter, 16–11
cost and weight, 20–86
American Graphite Co., 3–39
American Metal Co., Pecos mill, building, 20–48, 94
cost of mill, 20–78
distributor, 18–107
economic efficiency, 19–197
flotation, 12–20, 27, 33, 72, 99, 101, 114, 127
grinding, 5–83
ore, 11–68
power, 20–53
recovery, 2–154
sampling, 19–55, 71
tabling, 11–68
thickening, 15–16
American Nepheline Corp., 3–30
American Smelters Securities Co., 15–02
American Sm. & Ref. Co., grinding, 5–64, 65, 67, 68, 91
San Antonio mill, 2–237
American Zinc Co., 2–159
classifying, 8–10
crushing, 4–28, 48, 63, 65
flotation, 12–10, 104
jigging, 11–16
location of mill, 20–02, 03
ore, 20–02, 03
pipe sampler, 19–31
power, 20–53
recovery, 2–154
sampling, 19–55
screening, 7–28
sink-float, 11–114 to 119, 124
tabling, 11–64
tailing disposal, 20–41
water, 20–13
Amines, 12–14 to 17
coating reaction, 12–14, 15
contact angles, 12–15
flotation capacity, 12–16
solubility of salts, 12–15
trade names, 12–17
use in mills, 2–24
utility, 12–14
Ammonia leaching, 11–67
Ammonium chloride, coagulant, 15–08
in amalgamation, 14–16, 19
Amortization, 21–20
Amyl acetate, adsorption in frothing, 12–54
Anaconda Copper Mg. Co., 2–46
building, 20–44
chutes, 18–67
classifying, 8–16, 24, 57, 60
concentration, 2–01
conveying, 18–32, 39
elevators, 18–57
flotation, 12–96, 104, 106, 107, 109, 114, 115, 121
grinding, 5–12, 16, 68, 112, 126

INDEX

Anaconda Copper Mg. Co., jigging, 11–20, 22, 30, 34, 35, 39
launders, 18–70
location of mill, 1–03; 20–01
manganese plant, 2–205
ore haulage, 20–04, 07
round tables, 11–128, 129
smelter, 1–03
storage, 20–11
tabling, 11–69, 82
tailing disposal, 20–40, 41
thickening, 15–08, 10, 13
zinc flotation, 2–185
Analytic geometry, 21–33 to 42
Andalusite, flotation, 12–126
grinding, 6–25
Andes Copper Co., 2–34
chutes, 18–67
classifying, 8–10
conveying, 18–32, 36, 49
crushing, 4–28
elevators, 18–57
feeders, 18–99, 101
filtration, 16–07
flotation, 12–104
grinding, 5–12, 85
launders, 18–69
mill building, 2–36
pumping, 18–82
screening, 7–26
thickening, 15–17
Andreasen pipette, 19–122
Angle of repose, *see Repose, angle of*
Angles, 21–20
any magnitude, 21–29
construction, 21–22
conversion tables, 22–32, 41
function series, 21–31
functions of, 21–28 to 31
inverse, 21–32
tables, 22–34 to 37, 46 to 49
line definitions of, 21–29
measure, 21–30; 22–32, 33
multiple, 21–30
negative, 21–30
Anglesite, activation, 12–34
flotation, 12–11, 120
Anglo-American Mg. Corp., *see Yellow Aster*
Anglo-Chilean Consolidated Nitrate Corp., 3–68
Anglo Oriental (Malaya), Ltd., 2–226
Annuities, 21–19
tables, 22–56
Anthracite, grinding, 6–23, 26, 46, 49
oiling of, 12–06
production, 1–02
sink-float, 11–115, 125
washing, 10–09
Antilogarithms, table, 22–44
Antimony, 2–19
flotation, 2–73
-gold ores, 2–73
grinding, 6–26
tribromide, 19–151
trichloride, 19–152
Apatite; *see also Phosphate*
depression, 12–34
flotation, 12–25
selective grinding, 3–76
Apatite Trust, 3–76
Apron, conveyor, 18–47
sorting on, 2–31
feeder, 2–51
Aramayo Mines, 5–103; 8–50
Arc, circular, 21–23, 25
Area, approximate, 21–26
by integration, 21–53
measures, equivalents, 22–63
plane figures, 21–24 to 26
Simpson's rule, 21–26
solid sections, 21–26 to 28
solids, 21–26 to 28
Argonaut Mg. Co., 11–24, 92; 14–12, 16, 17, 19, 23; 19–55
Arithmetic, 21–01 to 06
Arizona Comstock mill, 2–127
Arizona Copper Co., 8–39
Arrastre, 5–131
in amalgamation, 2–122; 14–21
in barite milling, 3–07
Arsenic, 2–20
complexing, 12–36
trioxide, flotation, 12–120
Arsenopyrite, activation, 12–26, 33, 35
depression, 12–27, 30, 116
Arthur, *see Utah Copper Co.*
Asarco, Cia., 5–12
Asbestos, 3–03 to 06
differential grinding, 14–24
grinding, 6–26, 45, 49
mill, 3–05
pneumatic concentration, 11–139
production, 1–02
Ash Peak mill, 2–130
Asphalt, grinding, 6–26
Assaying, bibliography, 19–94
preparation of samples, 19–68
Astroid, 21–41
Asturiana, Real Compania—de Minas, 5–16, 124
Atlanta mill (St. Joseph Lead Co.), 2–119
amalgamation, 14–17, 18, 20 to 22
flotation, 12–104
Atlas Sand, Gravel & Stone Co., 7–30
Atmosphere, equivalents, 22–59
Atolia Mining Co., 2–244, 247
Atomic, number, 22–66
weight, 22–66
Attapulgus Clay Co., 3–36
Attrition, mills, 6–03
mixing, 12–22
Aunor Gold Mines, 8–16
Avalanching, 5–10
Avalos mill, 7–42, 43; 16–17
Avirol, 12–14
Ayers picker, 14–09
Azurite, flotation, 12–121

B. & W. mill, 6–10, 28, 29, 30, 32
B reagents, 12–45
Babilonia Gold Mines, 4–92
Baddeleyite, 3–87
Bagging, 3A–28
Bags, cement, 3A–28
Balances, 19–189
Balata belt, 18–31
Bald Eagle Mine, 3–61
Ball mill, 5–52 to 90, 97 to 130; 6–14 to 23; *see also Ball mill, dry; Ball mill, wet; Grinding; Tumbling mills;* legends of flowsheets in Secs. 2, 3, 3A
ball-casting machine, 5–40
ball paths, 5–03, 10; 6–12
balls, charge, 5–31, 54, 87
charging, 5–129
Concavex, 3A–40, 42
consumption, *see* specific mills, Sec. 2
cost, 5–94
Cylpebs, 3A–40
equilibrium charge, 5–30

Ball mill, balls, hardness, 5–36
material, 5–32, 35, 38
new charge, 5–26
nip angle, 5–27
rationing, 5–26, 28, 98; 6–48
replacement, 5–26
seasoned load, 5–30
shape, 5–26, 39
size, 5–26, 28, 39
toughness, 5–36
vs. pebbles, 5–32
weight, 5–32; 6–12
conical, *see Conical ball mill*
efficiency, 5–125; 19–98
liners, 5–17
particle loading, 5–09
selection, 19–99
shell, 5–11, 52
size, 5–54
speed, critical, 5–08
support, 5–52
weight, 5–54
Williamson, 2–48; 5–92
Ball mill, dry, 6–14 to 23
air sweeping, 6–15
ball coating, 6–15, 20
capacity, 6–15
charge, 6–15
compartment mill (*see*)
moist feed, 6–14
performance, 6–27 to 44
power consumption, 6–15, 27 to 44
screen type, 6–16
short *vs.* long, 6–15
vs. wet, 6–01, 15
Ball mill, wet, 5–52 to 90, 97 to 130; *see also Ball mill; Grinding; Tumbling mills;* legends for flowsheets in Secs. 2, 3, 3A
attendance, 5–126
balls, charge, 5–31, 40, 54
consumption, 5–31, 34, 37, 39
vs. power consumption, 5–39
wear, 5–27, 37 to 39
capacity, 2–212; 5–07, 31, 60, 80, 98, 99
circulating load, 5–07, 98, 99
cost, 20–81
efficiency, 5–61, 87, 125
feed size, 5–53, 79, 98, 99
feeders, 5–16
grate type, 5–52, 78
grates, 5–78, 100
Hardinge, *see Conical ball mill*
high-discharge, 5–53
length of shell, 5–07
liners, 5–17
lost time, 5–61, 92
low-discharge, 5–53
manufacturers' data, 5–54
open-end, 5–53
operation, 5–97
overflow type, 5–52, 53
performance, 5–58, 56, 81; *see also* specific mills, Secs. 2, 3A
power, 5–07, 13, 31, 39, 54, 60, 87
product, 5–53, 58, 79, 80, 87, 108
pulp density, 5–07, 61, 92, 123
reduction ratio, 5–60, 80
speed, 5–06, 08, 09, 54, 61, 87
vs. performance, 5–07, 08
support, 5–52
time-factor, 5–07, 99, 100
tumbling media, 5–26
vs. dry, 6–01, 15
vs. rod mills, 5–51, 52
Ball mill, wet, weight of charge, 5–07, 54
Williamson mill, 2–48; 5–92
Ball-bearing mill, 3A-30; 6–10; *see also* specific makes
Ball-tube mill, 6–18, 28
Ballas, 3–20
Balmat mill (St. Joseph Lead Co.), crushing, 4–15, 65
feeders, 18–99, 101
flotation, 12–27, 35, 60, 66
grinding, 5–20, 39, 43, 102, 125
guard magnet, 13–35
recovery, 2–154
sampling, 19–55
screening, 7–51
Bar grizzly, cost and weight, 20–87
Barge loading, 3–116
Barite, 3–06 to 09
decrepitation, 14–24
depression, 12–24, 34
differential grinding, 14–23
flotation, 12–13, 25, 26, 31, 32, 34, 38, 123
grinding, 5–65, 116; 6–05, 07, 26, 27, 46, 49
hand sorting, 14–03
milling, 3–06 to 09
production, 1–02
tabling, 11–77, 84
washing, 10–09
Barium chloride, 15–08
Barnac, 12–10
Barometric equivalents, 22–59
Barrel, 22–63
Barrett creosotes, 12–18
Barton Mines Corp., 3–37; 11–119
Base Metals Mining Corp., 12–27, 99
Batch mill, 6–12, 27, 31, 33, 34, 39, 50
Batea, 11–57
Battel, 11–57
Battelle gravity-flow concentrator, 11–106
Baum jig, 11–32
Bauxite, depression, 12–34
flotation, 12–34, 119
grinding, 6–27, 46, 49
price, 2–264
production, 1–02
Bazin formula, 20–22, 32
Beach Glen Mine, 18–62
Bearing pressures, foundations, 20–42
Bearings, cost and weight, 20–81
Beatrice Mine, 2–238
Beattie Gold Mines, 5–107, 118; 12–118; 16–08
Bedded media, 11–04; *see also Beds*
Beds, 11–02
action, 11–05, 46
apparatus, 11–04
buoyancy, 11–07
classification of, 11–04
density, 11–03
dilation, 11–03
formation, 11–04
jig, *see Jigs*
layer, 11–05, 46
penetration, 11–06
pulsated, 11–04
ragging, *see* specific jigs
shaken, 11–55, 60
sorting in, 11–07
stirred, 11–95, 96
terminology, 11–02, 04
vanner, 11–90
Beebe Mine, 12–63
Belden Amador Mines, 11–77
Belmont mill, 15–23; 18–92
Belmont-Shawmut mill, 11–71

Belmont-Surf Inlet mill, 11-64
Belt, *see Belting*
Belt conveyor, 18-29 to 47; *see also* flowsheets in Secs. 2, 3, 3A
arrangements, 18-30
bearings, 20-51
belt tension, 18-39, 40, 44
belting, 18-30, 37, 40
capacity, 18-32, 34, 36, 44, 46; 20-51
cleaning, 18-42
cost, 18-47; 20-81
curvature, 2-51; 18-29, 37; 20-84
discharge, 18-41, 42
distribution with, 20-50
downhill, 3A-38; 18-47; 20-04
dredge, 2-91
drive, 18-40; 19-65
efficiency, 20-49
feeding, 18-34, 40
idlers, 18-29, 33, 39
length, 18-32, 36, 44, 46; 20-51
life, 18-31, 32
performance, 18-43
power, 2-35, 47, 48; 18-36 to 39, 44, 45, 47; 20-04, 51
pulleys, 18-34
selection, 20-50
skirt boards, 18-40
slope, 2-92; 18-30, 36, 37; 20-04, 50
speed, 18-32, 35; 20-51
stacker, 2-91
support, 18-43
tripper, 18-38, 41
use, 18-29, 31; 20-39
weight, 20-84
width, 18-32, 34
Belting, Balata, 18-31, 55
conveyor, 18-30, 37, 40
cost, 20-81
elevator, 18-55
kinds, 20-54, 55
life, 18-31, 32
power, 4-05, 24
rubber, 18-30
splicing, 18-56
steel, 18-31
tension, 18-39, 40, 44
use, 20-54, 55
Bendelari jig, 11-23 to 25
Beneficiadora de Mercurio, 2-209
Benguet Consolidated Mg. Co., 12-42
Benson Mines, 13-28
Bentonite, 3-10
dispersibility, 11-112
grinding, 6-27
Berdan pan, 14-20
Bernouilli's theorem, 20-18
Berta Mining Co., 11-44
Bertha Mineral Co., 5-18; 19-42
Beryl, flotation, 12-13, 126
grinding, 6-27
Beryllium, 2-21
Bessel patents, 12-02, 73
Betaine, 12-17, 43
Bethlehem Steel Co., 13-28, 29
Bids, 20-95
Big Creek Fluorspar Co., 11-139
Big Missouri mill (Buena Vista Mining Co.), 2-107; 12-104
Bin, 18-01 to 23
Baker, 18-17
clogging, 18-22
concrete, 2-170; 18-18
conical-bottom, 18-11
Bin, cribbed, 18-13
design, 18-04 to 16
discharging, 2-54, 55; 6-52; 18-19
excavated, 2-53
feed to, 18-18
gates, 18-20 to 23; 20-82
hang-up, 18-23
lining, 2-52; 18-12
louvred, 18-23
pressures in, 18-06 to 11
segregation in, 18-04, 18
shape, 18-03
spherical-bottom, 18-11
steel, 18-16
surcharged, 18-09
surge, 2-52; 18-01
suspension bunker, 18-04, 12, 17
weights of filling, 18-05
Bindicator, 3A-28
Bird centrifugal classifier, 8-58
Bird Dog mill, 19-49, 67
Birmingham Slag Co., 3-25
Bismuth, 2-21
flotation, 2-73
-gold ores, 2-73
Bitumens, 3-10
Black Hawk mill, classification, 8-08
commercial recovery, 19-196
crushing, 4-15, 48
filtration, 16-08
flotation, 12-59
grinding, 5-64, 103
recovery, 2-154; 19-196
Black Hills Tin Co., 2-221
Blade mill, 10-03
cost and weight, 20-93
Blaisdell tanks, 16-18
Blake crusher, 4-02 to 19; *see also* ***Crushers,*** and flowsheet legends, Sec. 2.
adjustments, 4-08
attendance, 4-18
breaking point, 4-18
capacity, 4-11, 14
construction, 4-04
cost, 4-19; 20-87
crane service, 4-18
efficiency, 4-17
fall through, 4-17
feed size, 4-09
lost time, 4-17
manufacturers, 4-08
nip angle, 4-11, 12
performance, 4-15
product, 4-18, 30
speed, 4-08, 12
throw, 4-08, 12
vs. other types, 4-21, 34
weights, 4-03; 20-87
Blanket table, 2-58, 61, 64, 66, 112, 117, 132; 11-132 to 134
Blast furnace, cost and weight, 20-82
Bleaching, barite, 3-07
Bleischarley mill, 11-11, 49
Blending equations, 19-200
Blister, 1-01
Blockholing, 4-92
Blood, 12-33
albumin, 15-06
Blowers, capacity, 12-56; 20-82
cost, 20-82
efficiency, 12-59
Blowing, 11-04, 56, 140
Blunger, 3-17

Boiler, cost and weight, 20–82
efficiency, 20–64
Boiling point, metals, 2–17
Bolting cloth, 7–06
Bone black, grinding, 6–27
Bonne Terre mill (St. Joseph Lead Co.), 2–155
classification, 8–37, 39, 56
conveying, 18–37
crushing, 4–31, 65
filtration, 16–07, 10
flotation, 12–104
grinding, 5–56
location, 20–02
ore, 20–02
pumping, 18–82
recovery, 2–154
sampling, 19–55
screening, 7–40, 41
storage, 20–11
thickening, 15–17
Booming, 2–76
Borates, 3–11
Borax, flotation, 12–125
grinding, 6–26, 46, 49
Borcherdt sampler, 19–42
Borda's tube, 20–19
Borneol, 12–44
Bornite, activation, 12–34
depression, 12–27, 28, 30, 36
flotation, 12–08, 27, 109
Boston Sand & Gravel Co., 3–96
Bowl classifier, 8–29; *see also* ***Bowl-rake classifiers; Hydro-bowl classifiers***
Bowl mill, 6–08
Bowl-rake classifier, 8–31 to 35
capacity, 8–34
critical-size control, 8–35
dilution, 8–33
efficiency, 8–35
performance, 8–32; *see also* specific mills, Secs. 2, 3, 3A
products, 8–34
speed, 8–34
use, 8–33
Boylan cone, 8–40
Braden Copper Co., 5–97, 100; 8–20; 11–71; 12–93
Bradley Hercules mill, 6–09, 29, 37, 48
Bradley tailing mill, 2–127
Brass ashes, 11–20
Brassert tower, 9–17
Brick, 3–15
fire-clay, manufacture, 3–89
refractory, 3–88
Bridgeman sampler, cost and weight, 20–91
Bridgeport Wood Finishing Co., 4–92
Bridgeton Sand Co., 13–19
Britannia M. & S. Co., 2–57
blanket tables, 11–134
building, 20–44, 46
chutes, 18–67
classifying, 8–09, 20
conveying, 18–32, 36, 39
crushing, 4–16, 49, 58, 64, 94
dewatering, 15–03
elevators, 18–57
feeder, 18–101
filtration, 16–12, 13
flotation, 12–26, 58, 59, 61, 96, 97, 101, 102, 106, 115
grinding, 5–56, 112
hand sorting, 14–06
launders, 18–69
location of mill, 20–02
ore, 20–02
Britannia M. & S. Co., power, 20–53
pumping, 18–82
sampling, 19–55
storage, 20–11
thickening, 15–17
Broken Hill district, N.S.W., 11–17
Broken Hill North, 2–154, 172; 12–69
Broken Hill Proprietary, 11–17; 12–74; 18–19
Broken Hill South, Ltd., 2–169
flotation, 12–113
jigging, 11–17, 18
recovery, 2–154
tabling, 11–72
Bromoform, 19–151
Bronze, grinding, 6–01, 27
Brownian movement, 9–06; 11–03, 112; 12–21, 28; 15–04, 06
Brucite, 3–12
flotation, 12–126
Brunton sampler, 19–43
cost and weight, 20–91
B.t.u., equivalents, 22–59
Bubble attachment, *see* ***Levitation, flotation***
Bubble machine, 19–176
bibliography, 19–183
procedure, 19–182
Buchans Mining Co., 2–195
Bucket elevator, 18–55 to 66
applicability, 20–52
belt tension, 18–65
belting, 18–55
boot, 18–59
buckets, 18–61
capacity, 18–56, 57, 66; 20–51, 52
chain, 18–58; 20–52
continuous, 18–60
cost, 20–39, 42, 85
design, 18–66
discharging, 18–65
drive, 18–55
efficiency, 20–49
feeding, 18–63
for tailing disposal, 20–39
head pulley, 18–66; 20–51
housing, 18–58
lift, 20–51
performance, 18–56, 57
power consumption, 18–57, 65, 66; 20–51
speed, 18–56, 57, 60, 62; 20–51
spill, 18–61
splicing belts, 18–56
utility, 20–52
Buddle, 11–127 to 130
Buena Vista Mining Co., 2–107
Buffalo Ankerite mill, 4–15; 5–64, 113; 7–50, 51, 59; 16–09, 13
Buffering, in flotation, 12–31, 36
Buhr mills, 6–03, 13
Bull jig, 11–22
Bullfinch Proprietary mill, 18–92
Bullion, base, 1–01
Bullion Coalition mill, 15–08
Bumping table, 11–59
Bunker Hill classifier, 8–50
Bunker Hill & Sullivan Mining & Concentrating Co., 2–167
building, 20–48, 94
chutes, 18–67
classification, 8–08, 10, 20, 53
concentration efficiency, 19–197
conveying, 18–32; 20–42
cost of mill, 20–78
crushing, 4–27, 61
desliming at, 11–61

Bunker Hill & Sullivan Mining & Concentrating Co., drying, 17–13
elevators, 18–57
filtration, 16–07
flotation, 12–22, 57, 66, 68, 96, 102, 105, 113
grinding, 5–64, 66
jigging, 11–09, 10, 22
jig *vs.* table, 11–70
launders, 18–69
location of mill, 20–03
ore, 20–03
power, 20–53
pumping, 18–82
recovery, 2–154
screening, 7–16, 23, 29, 59
sink-float, 11–119
storage, 20–11
tailing disposal, 20–35, 40
thickening, 15–16
vanners, 11–61, 92, 94
water, 20–13
Burro Mountain mill, 4–31; 8–39
Bushel, 22–63
Butchart flotation machine, 12–63
Butchart table, 11–70 to 74
Butler Bros., Harrison plant, 2–139
roasting-magnetic plant, 2–140
sink-float, 11–114 to 119, 124, 139
stockpiling, 18–24
Butte & Superior Mining Co., 4–64; 5–56, 57; 11–64, 79; 20–06, 11
Butters Virginia City mill, 5–23

Cable, conductor, 20–60, 61
Cadmium, 2–22
complexing, 12–36
production, 1–02
Caesium, 2–22
Cage mills, 6–03
Calcining, 3–51 to 60, 62; 14–24
Calcite, activation, 12–31
depression, 12–26, 31, 34, 35
flotation, 12–23, 25, 38, 123
Calcium, chloride, 15–07
hydroxide, 15–08; 20–39; *see also* ***Lime***
polysulphide, 2–35
Calculations, milling, 19–189 to 208
Calculus, 21–42 to 56
derivatives, 21–42
partial, 21–45
differentials, 21–45
differentiation, 21–43
integration, 21–49
approximate, 21–56
constant of, 21–53
maxima and minima, 21–44
rates, 21–46
Caldecott cone, 8–36
Calgon, 12–34
Caliche, 3–67
California Quarries Corp., 3–82
Callahan Zinc-Lead Co., Duquesne mill, 2–197; 12–106, 115
Callow, cone, 8–42; 11–92
flotation cell, 2–35, 43; 12–55, 72, 79
patent, 12–03
screen, 7–70
Calumet & Arizona mill, 4–67
Calumet & Hecla Mg. Co., 2–32; 20–03
classifying, 8–16
conveying, 18–32, 36, 47
crushing, 4–04 to 06, 08, 17, 61, 88
flotation, 12–104
grinding, 5–15, 35, 36, 112, 118
Calumet & Hecla Mg. Co., jigging, 11–20, 54
launders, 18–71
sampling, 19–55
steam stamp, 4–88
storage, 20–11
tabling, 11–64, 67
tailing wheel, 18–92
water, 20–13
Camera, 19–85 to 89
Camp Bros. Co., 4–38
Cananea Cons. Cop. Co., bin, 18–21
classifying, 8–28
crushing, 4–28
grinding, 5–32, 43, 65, 97, 107
guard magnet, 13–35
launders, 18–70
location of mill, 20–02, 03
ore, 20–02, 03
power, 20–53
screening, 7–36
storage, 20–11
tabling, 11–64
Candelaria mill, 8–16
Canisteo-Cliffs Mining Co., 18–67
Cantilever grizzly, cost and weight, 20–87
Canvas table, 11–131
Canyon Corp., 15–16
Capacity; *see also* specific machines
measure, equivalents, 22–63
Capillary rise, 12–37
Carbitol, 12–46
Carbolic acid, *see* ***Phenol***
Carbon, 3–20
grinding, 6–27
Carbon bisulphide, 12–06
Carbon-black, surface, 19–132
Carbon tetrachloride, fire extinguisher, 20–71
Carbonaceous gangues, 12–32, 34
Carbonado, 3–20
Carbonate ion, in flotation, 12–26; *see also* ***Sodium carbonate***
Carbonates; *see also* specific minerals
activation, 12–27, 31
dispersion, 12–28
Carbopalmitoxy methyl pyridinium bromide, 12–43
Carborundum, grinding, 6–27, 28, 49
Carboxylic acids, 12–12
contact angles, 12–07
Cardinal Gold Mining Co., 2–115; 12–104
Cardioid, 21–41
condenser, 19–75
Carman percolator, 19–133
Carnotite, differential grinding, 14–24
flotation, 12–122
Carolina China Clay Co., 3–16
Carolina stone, 3–26
Cascade, flotation machine, 12–61, 79
grinding mill, 6–25
sampler, 19–41
Cascading, 5–06
definition, 5–04; 6–11
vs. cataracting, 5–10
Casein, 12–33
Cason mill, 11–135
Cassiterite; *see also* ***Tin, ore***
activation, 12–35
depression, 12–34
flotation, 12–16, 25, 35, 119
grinding, 6–43
Castleman function, 8–02
Cataracting, 5–04; 6–11
critical-speed equation, 5–05
impact, 5–11
vs. cascading, 5–10

Catenary, 21–26, 41, 47
C.C.D., 15–23
Celestite, flotation, 12–123
  grinding, 6–28
Celo Mines, Inc., 3–44; 12–127
Cement, 3A–01 to 42
  bagging, 3A–28
  blending, 3A–11, 41
  burning, 3A–15 to 22
  calculation of mix, 3A–09
  clinker, cooling, 3A–22
    grinding, 3A–25, 29 to 42; 6–01, 09 to 11, 16 to 18, 20, 21, 23, 26, 28, 29, 46 to 49
    storage, 3A–39
  composition, 3A–01
  compounds, 3A–16
  cooler, 3A–26
  correction of raw mix, 3A–13
  costs, 3A–07; *see also* specific operations
  definition, 3A–01
  flowsheets, 3A–29 to 42
  gun, 20–45
  handling, 3A–26 to 29
  in flotation, 12–26
  kiln, 3A–18
    air temperature, 3A–19
    calcination, 3A–16
    capacity, 3A–20
    chains, 3A–19
    chemistry of, 3A–15 to 18
    construction, 3A–18
    cost of operation, 3A–24
    drying in, 3A–15, 19
    feed size, 3A–18
    feeding, 3A–19
    fuel, 3A–20, 24, 29, 40
    gas velocity, 3A–15
    heat balance, 3A–20
    instruments, 3A–25
    labor, 3A–24
    lining, 3A–39
    performance, 3A–32
    predrying, 3A–21
    preheating, 3A–22
    rotary, 3A–18
    size, 3A–21
    speed, 3A–18
  kinds, 3A–02
  moduli, 3A–09
  packer, 3A–28
  power consumption, 3A–29, 37, 40
  production, 1–02; 3A–04
  proportioning, 3A–08
  rock, 3A–06
    crushing, 3A–07, 29
    drying, 3A–07
    flotation, 3A–11, 33, 35; 12–13, 32
    grinding, 3A–10, 29; 6–01, 10, 29, 46
    storage, 3A–08, 30, 32, 40
    thickening, 15–09
  selling, 3A–06
  shipping, 3A–27
  specifications, 3A–02 to 04
  storage, 3A–08, 27, 40
  types, A.S.T.M., 3A–03
  unloading, 3A–27
  water shipment, 3A–27
Cemented gravels, 10–02
Center of gravity, 21–55
Central Eureka Mining Co., 11–28
Central Mine, Broken Hill, 12–61, 113
Central Silica Co., 3–85
Central Zeballos mill, 14–20
Centrifugal coefficient, 9–08
Centrifugal concentrator; *see also Classifiers centrifugal; Cyclone dust collectors*
  Ainlay bowl, 11–135
  Humphreys spiral, 11–135
Centrifugal sand pump, 18–79 to 88
  applicability, 18–85, 88; 20–52
  cost, 20–90
  feeding, 18–80
  for circulating loads, 20–50
  for tailing disposal, 20–40
  Hydroseal, 18–87; 20–90
  lining, 18–84, 85; 20–52
  performance, 2–61; 18–82
  power consumption, 20–40
  pulp density, 20–40, 43
  rubber-lined, 18–84, 88; 20–52
  size handled, 18–84; 20–40
  suction lift, 18–84
  Vacseal, 18–88
  Wilfley, 18–86
Ceramics, grinding, 6–01, 06, 13
Ceresin, 3–10
Cerium, 2–22
Cerussite, flotation, 12–11, 23, 121
  jigging, 11–12
Cetyl, alcohol, 12–43
  ester of betaine hydrochloride, 12–43
  hydrogen sulphate, 12–43
  xanthate, 12–08
Chain, drive, use, 20–55
  feeder, 18–22
Chain block, cost and weight, 20–83
  in mills, 20–76
Chalcocite, depression, 12–28, 30, 36
  flotation, 12–08, 38, 109
Chalcopyrite, activation, 12–26, 34
  depression, 12–27, 28, 30, 31, 36, 37, 112
  flotation, 12–08, 27, 32, 109
  magnetic separation, 13–25
Chalk, 3–12
  grinding, 6–03, 08
Champion Sillimanite Co., 3–43
Chance cone, 11–106
Chapman process, 12–118
Charcoal, grinding, 6–30
Charleson Iron Mining Co., 2–138
Charleston Mining Co., 10–02
Chaser mill, 3–64; 6–06; 10–08
Chat, 11–14
  -sloughing jig, 11–15
Chatter, 11–15
Chezy formula, 20–24, 31
Chief Cons. Mining Co., 2–154
Chile Copper Co., *see Chuquicamata mill*
Chilean mill, 5–130
  stone-tired, 4–92
Chino mill (Nevada Consolidated Copper Co.) 2–49
  air-lift, 18–95
  building, 20–44
  classifying, 8–16
  conveying, 18–31, 36, 39, 49
  crushing, 4–16, 27, 50, 64, 66
  elevators, 18–57
  feeders, 18–99
  filtration, 16–07
  flotation, 12–59, 104, 110
  grinding, 5–23, 25, 43, 52, 57, 82, 103, 106
  launders, 18–70
  location of mill, 1–03; 20–01, 02
  ore, 20–02
    haulage, 20–04
  pumping, 18–82

Chino mill (Nevada Consolidated Copper Co.), sampling, 19–55
screening, 7–42, 51
smelter, 1–03
storage, 20–11
tabling, 11–64, 71, 79
tailing disposal, 20–39, 40
thickening, 15–17
vanners, 11–92
water, 20–13, 15
Christensen, patent, 12–03
Christmas Copper Co., flotation, 12–59
Chromates, depression by, 12–26
flotation, 12–14
Chrome ore, selling, 2–265
Chromite, 3–87
activation, 12–34
depression, 12–34
flotation, 12–23, 25, 119
grinding, 6–23, 30, 46
spiral concentrator for, 11–136
Chromium, 2–23
Chronoflo, 19–52
Chrysocolla, flotation, 12–121
Chuquicamata mill (Chile Copper Co.), chutes, 18–67
conveying, 18–31, 32, 36, 47
crushing, 4–27, 28, 49, 50
feeders, 18–99
filtration, 16–18
leaching, 14–24
Churchill-Wonder mill, 4–89, 90
Chutes, 18–66
slope, 2–55; 7–22; 20–49
Cineol, 12–44
Cinnabar, flotation, 12–108, 115
Cippoletti weir, 20–22
Circle, 21–21
arc of, 21–25
area, 21–25
tables, 22–18
chord, 21–21
circumference, tables, 22–18
construction, 21–22
equations, 21–35
mensuration, 21–25
secant, 21–21
sector, 21–25
segment, 21–25; 22–24
tangent, 21–21, 23
Circuit guard, 5–101, 103
Circulating loads, elevation of, 20–50
formulas for, 19–202
Citric acid, 15–08
City & Suburban Mine, 18–92
City Deep mill, 5–94
Clack mill, 2–127
Classification, cost, 2–105
definition, 7–01; 8–01
dry, *see Air sizing; Dust collection; see also* cement flowsheets, 3A–29 to 42
reverse, *see Reverse classification*
test equipment, 19–185
wet, *see Wet classification*
Classifiers, 8–01 to 61; 9–29 to 37; *see also Classification*
air, *see Air sizing; Dust collection*
centrifugal, 3A–35; 8–58
cost and weight, 20–83
dry *vs.* screens, 6–51
efficiency, 19–199
hydraulic, *see Hydraulic classifier*
hydro-bowl, *see Hydro-bowl classifier*
laboratory, 19–163 to 166
Classifiers, mechanical, *see Mechanical classifiers*
Munro, 2–58
Noranda, 2–62, 66
products, 10–13
sand tanks (*see*)
separators, 11–135
slime tanks (*see*)
wet, 8–05; *see also* specific machines
Clausthal mill, 11–09, 49; 12–50; 14–01
Clay, 3–13 to 18, 87
balls, 2–147; 10–16
bleaching, 3–35
depression, 12–34
dispersion, 12–29
flotation, 12–16, 126
grinding, 6–01, 03, 05, 06, 25, 31, 45 to 47, 49, 54
hand picking, 2–147
production, 1–02; 3–14
Clay City Pipe Co., 4–38
Clerici solution, 19–152
Climax Molybdenum Co., 2–210
classifying, 8–16
conveying, 18–32, 36, 49
crushing, 4–51
feeder, 18–101
filtration, 16–07, 17
flotation, 12–18, 46, 71, 78, 95, 110
grinding, 5–104
launders, 18–78
location of mill, 20–03
magnetic separation, 13–18
ore, 20–03
power, 20–53
pumping, 18–82
screening, 7–36, 47, 52, 58
thickening, 15–16
Cloth, filter, 16–02 to 04; *see also Filter, medium*
life, 16–17
pore sizes, 9–15
Clouds, 9–06
Cloverdale Mining Co., 2–208
Clutches, cost and weight, 20–83
placing, 20–54
Coagulants, for mill slimes, 20–39; *see also Flocculation*
Coal (bituminous), flocculation, 12–34
flotation, 12–34, 74, 129
for fuel, 20–64
grinding, 3A–29, 31; 6–01, 03 to 05, 08, 11, 22, 23, 31, 32, 45, 46, 47, 49
jigging, 11–32
oiling of, 12–06
pneumatic separation, 11–139
production, 1–02
tabling, 11–76
trough washing, 10–12
Cobalt, 2–25
complexing, 12–36
-copper-iron separation, 12–115
flotation, 12–11, 109
Cobalt Products Corp., 2–26
Cobalt Reduction mill, 16–21
Cobaltite, flotation, 12–109
Cobbing, 4–92
magnetic, 13–16, 19
pneumatic, 3–07
Cobija mill, 2–20
Cochenour Willans mill, 12–86
Cocks Eldorado dredge, 2–227
magnetic separation, 13–27
Coefficient of, contraction, 20–16
discharge, 20–18
toughness, 20–33, 34
velocity, 20–18

Coercimetry, 19–135
Coffee mill, 19–69
Coke, grinding, 6–14, 26, 32, 49
  production, 1–02
Cold Spring Mine, 14–09
Collection, flotation, 12–03 to 18
  agents, 12–06 to 18
  anionic, 12–06, 07 to 14
  bibliography, 12–04
  cationic, 12–07, 14 to 18, 25
  chemical agents, 12–06 to 18
  chemical theory, 12–04; 19–178
  critical concentration, 12–87
  definitions, 12–03, 20
  excess of collector, 12–87
  nature of collector film, 12–05
  oily collectors, 12–06, 13
  place, 12–88
  principles, 12–03
  quantity of reagent, 12–86
  reactive groups, 12–06
  sulphide, 12–08
  thick-pulp oiling, 12–13
Colloid, 15–05
Collom jig, 11–17
Cologarithms, tables, 22–42
Colonial Sand Co., 13–19
Colquiri, Cia. de Minas de, 2–230
  classifying, 11–76, 83
  crushing, 4–63
  grinding, 5–42
  jigging, 11–12, 13
  ore, 11–13
  sampling, 19–55
  tabling, 11–76, 83
Columbia Tungsten Co., 11–139
Columbium, 2–26
Combined Metals Reduction mill, 4–15; 5–14; 7–47; 8–16; 16–13, 17
Compagnie du Boleo, 15–03
Compañia Argentina de Cemento Portland, 3A–31
Compartment mill, 6–18; *see also* ***Grinding, dry***
  bearings, 6–20
  circuits, 6–50
  diaphragms, 6–19
  lubrication, 6–21
  moisture, 6–20
  performance, 6–28, 36, 39, 40, 51
  purpose, 6–15
  speed, 6–20
  temperature, 6–20
Compound interest and discount, 21–19; tables, 22–54, 55
Compressor, cost and weight, 20–83
Concenco classifier, 8–54
Concentrate, 1–01; 19–190
  grade, 1–04; 2–01, 11, 177, 178, 180, 181, 185; *see also* specific mills, Sec. 2
  handling, 2–30, 44, 59, 60, 62, 130, 174, 175, 180, 183, 184, 197, 204, 252
  selling, 2–254
  shipping, 2–263
Concentration, 2–02; *see also* specific methods
  bases, 2–02
  coarse *vs.* fine, 2–02
  criterion, 2–14; 11–02
  economics, 2–02
  gravity (*see*)
  miscellaneous methods, 14–01 to 24
  ratio of, 2–15
  size limitations, 2–02
  size of units, 2–02
  time-factor, 2–02
Con Chollar mill, 2–127
Concrete, cost, 20–80, 94
  for foundation, 20–44
  pouring in cold weather, 20–44
  reinforced mill frame, cost, 20–45
Conda mill, 7–42, 57
Condenser, 14–21
Conditioning, flotation, 12–18 to 37; 19–178
  activation, *see* ***Activation, flotation***
  agents, 12–25 to 37
  attrition mixing, 12–22
  by oxidation and reduction, 12–22, 27, 32, 34
  common-ion effects, 12–87
  definition, 12–03, 19
  depression, *see* ***Depression, flotation***
  desliming, 12–96
  for cationic flotation, 12–17
  hydroxyl ion, 12–86
  in grinding circuit, 12–20
  protection, 12–03, 25
  quantity of reagent, 12–87
  resurfacing, 12–22
  tanks, 12–19
  thick-pulp, 12–18, 20, 22
  time, 12–19, 34, 97
Conductivity, electrical, 2–17
  minerals, 13–43
  thermal, 2–17; 17–02
Conductors, electrical, 20–58, 59
Conduit, electrical, 20–62
Cone, 21–27
Cone, classifying, 8–46; *see also* ***Sand cones; Slime tanks***
Cone crusher, 4–44; *see also* flowsheet legends, Sec. 2
  adjustment, 4–54
  capacity, 4–55
  closed-circuit operation, 4–54
  efficiency, 4–55
  feed, 4–54
  manufacturers, 4–52
  manufacturers' data, 4–45, 47
  performances, 2–45, 184; 4–46 to 48
  power, 4–55
  product, 4–54
  rating, 4–46
  reduction ratio, 4–54
  short-head, 4–46
  speed, 2–211
  standard, 4–44
  wear, *see* flowsheet legends, Sec. 2
Cone, desliming, 8–42; 20–37
Cone sampler, 19–35
Cone, thickening, 8–42; 15–12
  cost and weight, 20–93
Conical ball mill, 5–61; 6–21; *see also* ***Ball mills; Tumbling mills***
  action in, 5–61
  ball paths, 5–10, 61; 6–53
  capacity, 5–08, 12, 62, 76; 6–27 to 44, 48
  charge, 5–62, 77
  cost, 20–81
  discharge, 5–63
  dry, 6–21 to 25, 26 to 43, 47, 51
  efficiency, 5–08, 12, 77, 125
  feed size, 5–63; 6–27 to 44, 48
  grates, 5–63
  height of discharge, 5–13
  lost time, 5–77
  manufacturers' data, 5–62
  operation, 5–97
  performance, 5–64; 6–26 to 43, 51
  power, 5–08, 12, 62, 77; 6–26 to 43
  product, 5–63, 70, 76, 108; 6–26 to 43, 48
  pulp density, 5–77, 123

Conical ball mill, reduction ratio, 5–76
speed, 5–12, 62, 77
speed tests, 5–08
vs. pebble mills, 5–33
weight, 5–62; 20–81
Connecticut Zinc Corp., 11–64, 82
Conrey dredges, 2–92
Conset jig, 11–32
Consistometer, 11–107
Consolidated Arizona Smelting Co., 5–56
Consolidated Feldspar Corp., 3–29
Consolidated Main Reef, 5–94; 18–77
Consolidated Mining & Smelting Co. of Canada, 2–180
building, 20–44, 46
chutes, 18–67
classification, 8–08 to 10, 16
conveying, 18–32, 36, 39, 47
crushing, 4–16, 51, 66, 72 to 74
feeder, 18–101
filtration, 16–07, 12
flotation, 12–93, 95, 98 to 100, 105
grinding, 5–12, 19, 25, 31, 67, 68, 97, 103, 106; 6–45
hand sorting, 14–06
launders, 18–71
magnetic separation, 13–33
pumping, 18–80, 82
recovery, 2–154
screening, 7–43
storage, 20–11
sulphur recovery, 3–120
thickening, 15–16, 17, 25
tin concentrator, 2–241
Consolidated Rock Products Co., 7–32
Constant-weight feeder, cost and weight, 20–85
in grinding circuits, 5–127
Constants, numerical, tables, 22–41
Contact angles, 12–38; *see also* specific collectors
anomalous, 12–08
characteristic, 12–06, 07, 15, 18, 38
effect of frothing agents, 12–38
effect of *p*H, 12–38
hysteresis, 12–40
liquid-solid, 12–38
oil-coated surface, 12–13
rapidity of development, 12–38
time-factor, 12–39
vs. recovery, 12–06, 31
with liquid oils, 12–05, 13
Continental Chemical & Ore Co., 3–33
Continental dredge, 2–94
Control, cement-plant, 3A–25
classifier, 8–60
crushing-plant, 4–96, 100
sand-cone discharge, 8–40
Conversion tables, 22–33, 41, 59 to 65
Converters, cost and weight, 20–83
Conveyor, apron, *see* ***Apron conveyor***
belt, *see* ***Belt conveyor***
bucket, 18–49
cost and weight, 20–84
downhill, 18–47; 20–04
drive, interlocking, 19–65
flight, 18–50
Johns, 18–53
operating cost, 2–105
pan, *see* ***Pan conveyor***
pipe, 18–53
rotary, 18–54
screw, 18–51
tell-tale, 5–129; 18–105
tubular, 2–60; 18–54
types, 18–29
Convey-O-Weigh, 18–106
Coolers, cement, 3A–26
cost and weight, 20–84
grate-type, 3A–23, 41
pan-type, 3A–24
quenching-type, 3A–23
recuperator, 3A–23
rotary, 3–62; 3A–23; 13–33
Unax, 3A–23, 39
Vanderwerp, 3A–23
Cooley jig, 11–13 to 16
Co-ordinates, polar, 21–33
rectangular, 21–10
transformation, 21–40
Coplay Cement Mfg. Co., 3A–22; 6–44
Copper, 2–27 to 69
-cobalt separation, 12–115
complexing, 12–27, 36
concentrate, grade, 2–30
concentration, 2–28 to 69
cost, 2–30, 32, 37, 39, 42, 44, 48, 57, 59, 60, 62, 65, 68
flotation, *see* ***Copper, flotation***
jigging, 11–18 to 20, 22, 28, 30, 35, 39
labor, 2–30; *see also* specific mills
power consumption, 2–30, 35, 37 to 40, 42 to 44, 47, 50, 57, 58, 60 to 62, 65, 67
ratio of concentration, *see* specific mills
recoveries, 2–30; *see also* specific mills
round tables, 11–128
sink-float, 11–120
tabling, 11–64, 67 to 69, 71, 73, 79, 82, 88
vanner, 11–92
water consumption, 2–30; *see also* specific mills
-cyanide complex, 12–27, 36
flotation, 2–29, 31, 32, 34; 12–10, 11, 13, 25, 26, 31, 32, 34, 88, 109, 118
grade of concentrate, *see* ***Copper concentrate, grade***
ion, 12–26
-iron differential flotation, 2–34; 12–114
leaching and flotation, 2–69
-lead separation, 2–198; 12–115
-molybdenite separation, 12–115
native-copper mills, 2–30
ore, 2–27; *see also* specific copper-concentrating plants; specific copper minerals
oxide, grinding, 6–33
oxidized ore, flotation, 12–119, 121
precipitation, 2–69
price, 2–28
production, 1–02; 2–28
selling, 2–262
sulphate, 2–130; 12–26, 27, 89
sulphide-copper mills, 2–34 to 69
uses, 2–27
-zinc separation, 2–68; 12–115
Copper Cliff, *see* ***International Nickel Co.***
Copper Queen mill, building, 20–44, 46
conveying, 20–50
cranes, 20–76
crushing, 4–16
flotation, 12–59, 97, 101
grinding, 5–43, 118
ore, haulage, 20–06, 08
power, 20–53
screening, 7–23
storage, 20–11
tailing disposal, 20–38
water, 20–13
Copper Range Co., 2–30
chutes, 18–68
classifying, 8–09, 32

Copper Range Co., conveying, 18–32, 47
crushing, 4–08, 19, 87
filtration, 16–10
flotation, 12–104
grinding, 5–32, 36, 57, 112, 116
hand sorting, 14–05, 06
jigging, 11–18, 20
location of mill, 20–01, 02
ore, 20–02
haulage, 20–04
screening, 7–29, 53
storage, 20–11
tabling, 11–67
Corduroy table, *see Blanket table*
Cornish rolls, 2–170; 4–72
Cornwall, hand sorting, 14–01
stone, 3–26
Corocoro, Cia. — de Bolivia, 15–20
Coronet Phosphate Co., 12–83; 18–25
Corundum, 3–18 to 20, 37, 87
flotation, 12–126
grinding, 6–33
Cosines, logarithmic, 22–46
natural, 22–34
Cost estimating, 20–80
form for estimate, 20–95
Costs, 20–78 to 96; *see also* specific machines and operations
Cotangents, logarithmic, 22–48
natural, 22–36
Cottrell precipitator, 9–18
in dust collection, 20–74
in dust sampling, 19–59
Countercurrent, classifier, 8–19
decantation, 15–23
Counting assay, 19–207
Couplings, cost and weight, 20–84
placing, 20–54
Covellite, depression, 12–28, 30, 36
flotation, 12–109
Craigmont corundum mill, 3–20
Cranes, cost and weight, 20–84
in mills, 2–33, 54, 55; 20–76
power, 2–35
Crangle jig, *see Pan-American jigs*, pulsator type
Crawl, cost and weight, 20–84
in mills, 20–76
Creosotes, 12–18, 44
coal-tar, 12–44
for frothing, 12–46
wood, 12–44
Cresol, 12–45
impurities, 12–18
utility, 12–46
Cresylic acid, *see Cresol*
Cristobalite, 3–87
Crooked River dredge, 2–94
Croton Iron Mines, 18–19
Crown Mines, 4–15; 5–94; 14–06
Crude, 1–01
Crusher building, floor areas, 20–48
Miami Copper Co., 4–97
Phelps Dodge, Morenci, 2–52, 53
separate, 20–41
Crushers; *see also* specific types
arrangement, 4–96
Blake, *see Blake crusher*
breaking point, 4–18
choice, 4–36, 94
classification of, 4–02
clogging, 4–94
cost and weight, 20–87; *see also* specific types
Dodge, *see Dodge crusher*
Edison rolls, 4–39
Crushers, gape, 4–08
gearless, 4–23, 42
giant rolls, 4–38
gyratory, *see Gyratory crusher*
hooks for, 4–18
horizontal-pitman type, 4–19
jaw, *see Jaw crusher*
jaw plates, 4–06
laboratory, 19–163
lubrication, 4–06, 98
Newhouse, 4–42
reduction gyratory (*see*)
reduction ratios, 4–09
secondary, 4–94
sectionalizing, 4–08, 19
single-roll, *see Single-roll crusher*
single-toggle type, 4–19
sledging rolls, 4–36, 39
slugger rolls, 4–38
spacing, 20–47
Telsmith, 4–25
Crushing, 4–01 to 101
blockholing, 4–92
closed circuits, 4–94
cobbing, 4–92
control, 4–96
cost, 2–39, 42 to 44, 57, 59, 60, 62, 99, 103, 105, 113, 118, 120, 130, 167, 170, 174, 183, 188, 197, 252; 4–100
crushability, 4–12, 13
dust collection, 4–96
efficiency, 4–17, 33; 5–125
feed factor, 4–13
feeding, 4–93, 95
fine, 4–95
flowsheets, 2–16; 3–109 to 117; 4–93, 96; *see also* flowsheets in Sec. 2
graded, 4–74, 96
heating-and-quenching, 4–92
intermediate, 4–39
machines, 4–01
miscellaneous methods, 4–92
moisture factor, 4–13
mud-capping, 4–92
pile-driver, 4–92
plants, 2–52, 53; 3–104 to 119; 4–93
portable, 4–100
power consumption, 2–29, 35, 47, 58, 62, 113, 174, 175; 20–53
primary, 4–01, 93
principles, 4–01, 93
removal of waste, 4–95
scalping fines, 4–93, 94
secondary, 3–114; 4–94
sledging, 4–92
spalling, 4–92
stage, 4–74, 96
storage, 4–95, 96
swing-ball, 4–92
underground, 2–66; 4–98
wet ore, 4–94
work of, 5–126; 19–95
Cryolite, 3–20
flotation, 12–123
Crystal Fluorspar Co., 15–04
Crystallization, fractional, 14–24
Cuban American Manganese Corp., 2–204
grinding, 5–128, 129
Cube, area, 21–27
root, by slide rule, 21–06
tables, 22–10
Cubes, by slide rule, 21–06
volume, 21–27
tables, 22–04

Cupferron, 12–16
Cuprite, flotation, 12–119
Curvature, 21–46
Cusi Mexicana mill, 12–63
Custom mills, 2–130, 255
  charges, 2–255
Cyanidation, 2–102
  bibliography, 19–189
  calculations, 19–187, 202
  cost, 2–105, 131
  laboratory testing, 19–187
Cyanide ion, 12–27
  availability, 12–27
  complexing, 12–26, 27
  critical concentrations, 12–28, 112
  in amalgamation, 14–16, 19
  in flotation of gold ores, 2–132; 12–28
  surface closure by, 12–24
Cyanide mills, floor areas, 20–48
  power consumption, 20–53
Cycloid, 21–26
  construction, 21–41
  equation, 21–40
  length of arc, 21–53
  radius, 21–47
Cyclone dust collectors, 9–07 to 12
  centrifugal coefficient, 9–08
  design data, 9–09
  performance, 9–12; 20–74
  power consumption, 9–11
  pressure drop, 9–08
  separating velocity, 9–09
  standard, 9–10
  Van Tongeren, 9–10
Cylinder, 21–26, 27

Dams, 20–17, 22
Dayton mill, 2–127
De Bavay flotation process, 12–51
De Beers Consolidated Mines, 3–21
Decantation, 19–109
Decker's Creek Sand Co., 3–84
Decolloiding, 2–169
Decrepitation, 14–24
Dee jig, 11–18
Deep-well pump, cost and weight, 20–89
Degrees to minutes (decimal), 22–32
Degrees to radians, tables, 22–32
Deister, classifier, 8–48
  -Overstrom table (*see*)
  tilting slimer, 11–132
Deister-Overstrom table, 11–74 to 78
  vs. Plat-O table, 11–78, 84
De Lamar dredge, 2–89, 90
Delano classifier, 8–55
Delprat patent, 12–73
De Meir jig, 11–49
Demonstration mines, 20–03
  blanket tables, 11–133
  building, 20–48, 94
  cost of mill, 20–78
  flotation, 12–28
  power, 20–53
  water, 20–13
Dennison weigher, 2–42
Density, composite, 11–03
  effective, 11–03
  of metals, 2–17
  of minerals, 22–67 to 71
  of mixtures, 11–03
Denver, conditioner, 12–20
  Mineral jig, 2–117; 11–27
  Sub-A machine, 12–64
    cost and weight, 20–86
Denver, Sub-A machine, manufacturer's data, 12–65
    performances, 2–68, 69, 184
    unit cell, 12–66
De-oiling, by alkali, 12–29
Depression, flotation, 12–23; *see also Conditioning; Flotation agents*
  by complexing, 12–24
  by destruction of collector coating, 12–24
  by organic colloids, 12–24, 34
  by prevention of resurfacing, 12–23
  by surface closure, 12–24
  definition, 12–03, 19
  hydroxyl ion, 12–86
  of sulphide minerals, 12–112
  place, 12–88
Depth of focus, 19–74
Derivatives, 21–42
Designing of mill, 20–76
Desliming, jigs, 11–11
  scuffing, 10–08
  table feed, 11–61
  tailing launder, 20–37
  vanner feed, 11–61
Desloge mill (St. Joseph Lead Co.), classifying, 8–56
  crushing, 4–31, 61, 65
  filtration, 16–07, 10
  grinding, 5–42
  pumping, 18–82
  screening, 7–30, 41
Detergents, 12–36
Detroit Copper Co., 11–73
Detroit Edison Co., 19–35
Devereaux agitator, 12–20
Dewaterers, mechanical, 8–58; 15–02 to 04; 16–18, 22; 20–16
Dewatering, 15–01 to 26; *see also Draining; Drying; Filtration; Thickening*
  cones, 15–02, 12
  rotary-hopper dewaterer, 16–18
Dextrine, 12–33
Diamond, 3–20 to 22
  bates, 11–57
  differential grinding, 14–23
  ground, composition, 11–106
  jigging, 11–33
  pan, 11–05
  panning, 11–56
Diaphragm jig, 11–23
  cost and weight, 20–88
Diatomite, 3–22, 87
Dichromate, *see Chromates*
Diesel engine, 20–64
Differential flotation, 12–112 to 116
  chalcopyrite-pyrite, 12–27
  lead-zinc, 12–26, 27, 34
  sphalerite-pyrite, 12–27
Differential grinding, 5–97, 103, 104; 14–23
Differential phase change, 14–24
Dihydroxy diphenyl thiourea, coating by, 12–05
Dilution, 19–206
Disk-and-cup feeder, 12–90
  cost and weight, 20–86
Disk crusher, 4–55
Disk filter, *see American filter*
Disk pulverizer, 19–70
Dispersion, 11–112; 12–24, 27 to 29, 32, 34 to 36; 15–05; 19–178
Distillation, fractional, 14–24
Distributors, 18–106
  dredge, 2–88
Ditch, 20–33, 34

Dithiocarbamate, 12–11, 27, 34
contact angle, 12–06
Dixanthogen, 12–11
coating by, 12–06
formation in coating copper minerals, 12–08
Djebel-Trozza Mines, 11–12
D-L-O drier, 16–18
DLT reagents, 12–17
Dodecahedron, 21–27
Dodge crusher, 4–19
cost and weight, 20–87
Dodgeville Mining Co., 2–161
Doe Run Lead Co., 11–34, 35; 15–03
Dolese & Shepard Co., 3–116
Dolomite, 3–23 to 26, 87
depression, 12–34
flotation, 12–123
Dome Mines, 2–100
blanket tables, 11–133, 134
classification, 8–08
crushing, 4–16, 50
filtration, 16–19
flotation, 12–99
grinding, 5–65; 6–46
hand sorting, 14–02
screening, 7–43
thickening, 15–16
Donovan mill, 2–127
Doodlebug, 2–96
Dorr, classifier, 8–07
filter, 16–09
ore washer, 10–13
sand washer, 10–13
sizer, 10–15
thickener, 15–14
Double-cone classifier, 9–36
Douglas Dam, 3–25
DP reagents, 12–16, 17
Drag classifier, 8–15
dewatering, 15–03
performance, 8–20
Draining, 15–01 to 04
screen, *see Screen, dewatering*
tank, 16–18
Dram, 22–65
Draper washer, 11–136
Dravo Corp., 3–101
Dredges; *see also Dredging, gold*
capacity, 2–92
copper, 2–33
cost, 2–85, 93
performance, 2–93
tin, 2–224, 225, 227; 11–12, 16, 25, 29, 103
types, 2–85
Dredging, gold, 2–85 to 97
capacity, 2–85
character of gravel, 2–94
clean-up, 2–91
cost, 2–85, 92 to 94, 96, 97
gold-saving plant, 2–87
jigging on, 2–90; 11–23, 25, 30
performance, 2–93
pond water, 2–92
power consumption, 2–92
ratio of concentration, 2–87
recovery, 2–92
stacker, 2–91
tabling on, 2–90, 93
tailing disposal, 2–91, 92
types of dredges, 2–85
water consumption, 2–92
Driers, 17–04 to 19
capacity, 17–15
centrifugal, 17–12
Driers, comparison, 17–13
cost, 17–06, 10, 18; 20–85
design, 17–16
dust loss, 17–13
electrical, 17–12
film, 17–13
firing, 17–17
floor, 17–05
hearth, 17–04
louvre, 17–10
Lowden, 17–06
multiple-tube, 17–12
operation, 17–13
reciprocating-grate, 3A–41
rotary, 17–08 to 12
slope and speed, 17–18
Ruggles-Coles, 17–10
sample, 19–185
screen-type, 17–12
spray, 17–13
steam-tube, 17–12
tower, 17–07
Utah, 17–12
vacuum, 17–13
weight, 20–85
Drilling mud, 11–77
Drives, 20–53 to 55
Drop-weight crusher, 19–96
Dross, grinding, 6–01, 27
Drum filter, *see Filter; Filtration; see also* specific types
cost and weight, 20–86
Dry panning, 11–140
Drying, 17–01 to 19
cement slurry, 3A–21
cost, 17–05, 12, 13, 16
during grinding, 6–08, 47
dusting, 17–13
efficiency, 17–13
evaporation, 17–01, 18
fuel consumption, 17–05 to 12, 17
heat loss, 17–14
kiln, 3A–15, 19
principles, 17–01
temperature, 17–17
to concentrate, 14–24
Duponol reagents, 12–14
Du Pont, frothers, 12–45
sink-float process, 11–125
Durban Roodeport Deep, 5–94
Dust collection, 9–05 to 29; 20–73 to 75; *see also* specific mills, Sec. 2
advantages, 20–73
centrifugal collectors, 9–07 to 13; *see also Cyclone*
classification of collectors, 9–05
collectors, *see* specific types
Cyclones, *see Cyclone dust collectors*
definition, 9–01
design, 9–05, 18 to 26; 20–73
draft loss, 9–06
efficiency, 9–09
electrical, 9–17
filters, 9–14 to 16, 27
gravitational separation, 9–05 to 07
in crushing plants, 2–55; 4–96
in sampling mills, 2–44; 19–65
inertial separators, 9–07
installations, 2–55; 4–96; 9–26; 20–74
mechanical-type collectors, 9–13
methods, 9–05; 20–73
scroll-type collectors, 9–13
scrubbers, 9–14, 28
settling chamber, design, 9–05

Dust collection, size of dusts, 9–05
size range of collectors, 9–05, 06
sonic, 9–18
towers, 9–16
washers, 9–16
Dust traps, 9–05 to 07
Dyes, in flotation, 12–28
Dyne, 22–59

Eagle-Picher M. & S. Co., Central mill, 2–182
sink-float, 11–114 to 119, 124
Eagle-Picher M. & S. Co., Ruby mill, 2–187; 20–03
crushing, 4–15, 63
feeder, 18–100
filtration, 16–12
flotation, 12–21, 63, 106
power, 20–53
recovery, 2–154
sampling, 19–55
water, 20–13
Earth-metal ions in flotation, 12–28
East Pool, 4–92; 13–25
East Rand Proprietary, 5–94; 18–93, 97
East Tennessee Manganese Co., 11–22
Eastern Magnesia Talc Co., 3–122; 12–128
Edwards mill (St. Joseph Lead Co.), 2–178
building, 20–45
conveying, 18–53
filtration, 16–10
flotation, 12–105
ore, haulage, 20–05
Efficiency; *see also* specific machines
classification, 19–199
coal washing, 19–162
concentration, 19–195, 197
economic, 19–196
graphical evaluation, 19–196
grinding, 5–125; 19–98
Egg albumen, 15–08
Eisenhardter mill, 2–149
Eisenzecher Zug, 11–42
Elasticity, metals, 2–17
Elaterite, 3–10
Eldorado Gold Mines, 2–251; 11–43; 12–111
Eldred process, 3–55
Electric Ear, 5–127; 6–44, 45, 51
Electric precipitator, 9–18; 19–59; 20–74
Electrical concentration, 13–01 to 47; *see also* ***Electrostatic separation; Magnetic separation***
Electrical equipment, 20–55 to 62
cost and weight, 20–81 to 93
fire protection, 20–73
interlocking, 19–65
Electromagnetic units, 13–03
Electrostatic, dust precipitation, 20–74
separation, 13–40 to 47
applicability, 13–47
charging, 13–40, 41
conductivities of minerals, 13–43
forces, 13–41
machines, 13–42
Johnson, 13–45
Sutton, 13–44
reversibility, 13–42
theory, 13–40
units, 13–03
Electrotator sampler, 19–60
Elements, table, 22–66
Elevation of concentrate, 20–43
Elevation of ore, 20–42; *see also* ***Bucket elevator***
circulating loads, 20–50
cost, 20–49
power for, 20–49
Elevators; *see also* specific types
bucket, *see* ***Bucket elevator***
cost and weight, 20–85
dewatering, 15–02
Elko Prince, 14–06; 15–16
Ellipse, area, 21–26
construction, 21–37
equations, 21–36
mensuration, 21–26
radius, 21–47
Ellipsoid, 21–28
Elmore, bulk-oil process, 12–49
patents, 12–03, 49
vacuum-flotation process, 12–75
El Portal, *see* ***National Lead Co.***
"El Potosi," Cia. Industrial, 2–173
classifying, 8–10
crushing, 4–16, 50
feeders, 18–99, 101
filtration, 16–10, 13
flotation, 12–27, 32, 72, 99, 100, 104
grinding, 5–43, 103
recovery, 2–154
sampling, 19–55
tailing disposal, 20–39
thickening, 15–16, 17
Elutriation, 19–109 to 118, 128
air, 19–113 to 118
Andrews apparatus, 19–112
design of elutriators, 19–117
Dynamic air analyzer, 19–114
Infrasizer, 19–115
Mt. Morgan elutriator, 19–112
organic liquids, 19–113
rising-water, 19–110
Schoene apparatus, 19–111
settling tube, 19–110
U.S.B.M. apparatus, 19–112
wet, 19–109 to 113
Embree Iron Co., 2–202
jigging, 11–22
Emerald, 3–37
Emery, 3–18
grinding, 6–33
Emery flotation cell, 12–60
Empire Iron & Steel Co., 17–07
Empire Star mill, 5–14
Empire Zinc Co., 11–40; 19–49, 50, 55
Empirical equations, charts for, 21–58 to 61
derivation, 21–56 to 58
Emulsification, 12–29
Emulsol, 12–17
No. 238, 12–14
X–1, 12–13, 14
Enargite, flotation, 12–27
Energy equivalents, 22–59
Engels Copper Mining Co., crushing, 4–15, 72, 94
flotation, 12–20, 41
grinding, 5–22, 66, 82, 84
location of mill, 20–02
ore, 20–02
power, 20–53
sampling, 19–55, 71
screening, 7–23
storage, 20–11
Engine, plane, 20–04, 10
steam, 20–63
Epicycloid, 21–26, 41, 47
Epitrochoid, 21–41
Erection of mill, cost, 20–80 to 93
Errors, 21–01, 17, 45, 46
Erythrite, flotation, 12–109
Esher mill, 2–127
Esperanza classifier, 8–15

Ester, 12–12
Eucalyptus oil, 12–44
Eupel mill, 2–149
Eureka Co., 2–200
Evaporation, rainfall, 20–13
  reservoir, 20–15
Everson, patent, 12–02, 13
Evolute, 21–46, 47
Excavation, cost, 20–80, 94
  design of, 20–77
  for mill, 20–41, 94
Expansion, metals, 2–17
Explosive shattering, 4–92
Exponentials, tables, 22–50
  trigonometric, 21–31
Extraction, 19–190

Fabre du Faure furnace, cost and weight, 20–90
Fagergren flotation machine, 2–39, 42, 68, 102, 106, 108, 110, 174; 12–66
Fahrenwald, classifier, 8–49; 10–15
  flotation machine, *see* ***Denver Sub-A machine***
Falconbridge Nickel Co., 2–216
  classifying, 8–09, 16
  crushing, 4–16, 50
  filtration, 16–13, 17
  grinding, 5–08, 66, 115
  hand sorting, 14–06
  screening, 7–51
  thickening, 15–25
Falling velocity, *see* ***Velocity, settling***
Fanning equation, for air, 9–23
Fatty acids, 12–12; *see also* ***Soap***
  contact angles, 12–07
  earth-metal ions with, 12–28
Feather River dredge, 2–94
Federal Lead Co., 20–02
  classifying, 8–54
  crushing, 4–31, 64
  dewatering, 15–03
  drying, 17–07
  filtration, 16–07, 10
  grinding, 5–42
  jigging, 11–35, 36
  launders, 18–70, 77
  sampling, 19–55
  screening, 7–29, 41
  tabling, 11–64, 71
  thickening, 15–17
Federal Mining & Smelting Co., Morning mill, 20–03
  classifying, 8–20
  hand sorting, 14–05, 06
  jigging, 11–36, 39
  power, 20–53
  recovery, 2–154
  sampling, 19–55
  tabling, 11–64
  water, 20–13
Federal Mining & Smelting Co., Page mill, 2–154; 12–114; 19–55, 71
Federal pneumatic classifier, 6–27
Feed, definition, 19–190
Feeders, 18–97 to 106; *see also* **specific types**
  apron, 2–51; 18–98; 20–85
  belt, 18–99; 20–85
  chain, 18–104
  Challenge, 18–103
  constant-weight, 2–51; 18–104
  cost, 20–85
  disk, 18–104
  flotation-reagent, 12–88
  Fuller rotary, 18–102
  laboratory, 19–163
Feeders, maintenance, 5–130
  Morse Vari-stroke, 18–101
  pan, *see* ***Pan conveyor***
  plunger, 18–103
  power consumption, 2–35
  reciprocating-plate, 18–102
  roller, 18–101
  Ross, 18–104
  screw, 18–103
  stirrup, 18–104
  tumbling-mill, 5–16, 40
  vibrating, 18–103, 104
  weighing, 18–105
  weight, 20–85
Feedometer, 6–51; 18–105
Feedoweight, 18–105
Feet-inches-millimeters, 22–60
Feinc filter, cost and weight, 20–86
Feldspar, 3–26 to 30
  activation, 12–26
  depression, 12–26
  flotation, 12–126
  grinding, 6–12, 24 to 26, 33, 34, 46, 47, 49
  production, 1–02; 3–26
Fenchyl alcohol, 12–44
Fenestra sash, 20–46
Ferraris support, 7–35, 36; 11–70, 138, 139
Ferreira Deep, 8–38
Ferric chloride, coagulant, 15–06
Ferric sulphate, coagulant, 20–39
Ferroalloys, production, 1–02
Ferrochrome, grinding, 6–34
Ferrosilicon, grinding, 6–34
Ferrous sulphate, coagulant, 15–06, 08
  in flotation, 12–27, 31
Fiberboard, 20–45
Fifth powers and roots, tables, 22–15
Film sizing, 11–56, 60, 126, 135; 19–172
Filter; *see also* ***Filtration***
  agitation in, 16–16
  air, 9–14 to 16; 20–74
  American, *see* ***American filter***
  blinding, 16–17
  Burt, 16–20
  Butters, 16–21
  capacity, 16–16
  Carpenter, 16–22
  centrifugal, 16–22
  cloth, *see* ***medium***
  comparison, 16–22
  cost, 16–17; 20–86
  Dorrco, 16–09
  Feinc, 16–09; 20–86
  Kelly, 16–20
  life of medium, 16–17
  laboratory, 19–167
  medium, 16–02 to 04, 17
  Merrill press, 16–19, 20
  Moore, 16–21
  Oliver, *see* ***Oliver filter***
  operation, 16–14
  plant layout, 16–05
  plate-and-frame, 16–19
  Portland, 16–09
  pressure-type, 16–19
  re-covering, 16–08, 17
  Ridgway, 16–14
  sand, 16–18
  Sweetland, 16–20
  tank, 16–18
  vacuum, 16–04 to 19
  vacuum-leaf type, 16–21
  washing, 16–17
  weight, 20–86

Filtration, 16–01 to 22; *see also* ***Filters***
cake, cracking, 16–15
formation, 16–02
moisture, 16–14
porosity, 16–14
resistance, 16–14
thickness, 16–02, 15
clarity of filtrate, 16–14
cost, 2–103, 105, 113, 120; 16–17, 22
effect of mixing sand, 11–83
feed, character, 16–02
floor area for, 20–48
power, 2–113; 16–06
pressure, 16–02, 15, 16
submergence, 16–16
temperature, 16–02, 16
washing cloth, 2–195; 16–17
Fine-reduction jaw crusher, cost and weight, 20–87
Fineness modulus, 3–98
Finger-type feeder, cost and weight, 20–86
Fire, extinguishers, 20–71
fighting, 20–72
protection, 20–71
stream, 20–20
Five-halves powers, 22–15
Floatstone Co., 3–23
Flocculation, 12–21, 24; 15–05
agents, 2–130, 132; 11–112; 12–34; 15–06; 20–39
by acids, 12–25, 29
by alkalis, 12–29, 32
by sodium sulphide, 12–36
in flotation, 12–101
magnetic, 11–113
slimes, 12–128; 15–05
Floors, 20–46
areas in different mills, 20–48
materials, 20–46, 69
reinforced concrete, 20–46
slope, 20–47; *see also* descriptions of mills in Sec. 2
space around machines, 20–47
washing, 20–47
Flotagen, 12–11
Flotal, 12–44
Flotation, 12–01 to 130
after cyanidation, 2–103
agglomerate tabling, *see* ***Table flotation***
agitation-froth process, 12–75, 82, 94
alkali and earth nonsilicates, 12–122 to 125
attendance, 12–101
basic rules, 19–127
boiling process, 12–73
boundary process, 12–47
bubble attachment, *see* ***Levitation, flotation***
bubble-column process, 12–47, 53, 55, 79, 95
vs. pulp-body process, 12–54, 61
bulk-differential, 12–116
bulk-oil method, 12–49
cascade, *see* ***Cascade flotation machine***
cement rock, 3A–11; 12–13, 32
chemical-generation process, 12–73
choice of flowsheet, 12–107
classification of machines, 12–48
cleaning, 12–100
collection, *see* ***Collection, flotation***
combination machines, 12–77
concentrate grade, 12–78; 19–181; *see also* plant descriptions in Secs. 2, 3, 3A
conditioning, *see* ***Conditioning, flotation***
constant conditions, 12–97, 100
control, 12–100; 19–178
cost, 2–30, 33, 39, 42 to 44, 57, 59, 60, 62, 103, 105, 113, 115, 118, 120, 150, 167, 170, 174, 177, 183, 188, 197, 252; 12–101; *see also* specific mills, Sec. 2
Flotation, coursing-bubble theory, 12–52
design of machines, 12–78
desliming, 12–96, 122
differential, 12–112 to 116
dispersion in, 19–178
floatability of minerals, 12–85, 108
flocculation, 12–101; 19–178
flowsheets, 12–102 to 108
froth, character, 19–179
froth flotation (*see*)
frothing, *see* ***Frothing, flotation***
gold, 12–117; *see also* Sec. 2
history, 12–02
impellers, 12–81
in manufacturing, 12–02
inert minerals, 12–129
labor, 12–102
laboratory testing, 19–174 to 185
levitation, *see* ***Levitation, flotation***
locked test, 19–181
machines, 12–47 to 82, 94, 99; 19–175; *see also* specific machines, and the legends of flowsheets in Secs. 2, 3, 3A
arrangement, 20–47
cost and weight, 20–86
maintenance, 12–102
mills, floor areas, 20–48
native metals, 12–114
nonsulphide, 12–116
of seeds, 12–02
oil-air separation, *see* ***Table flotation***
oiling, 12–13, 101
operation, 12–84 to 102
ore, effect of, 12–84
overoiling, 12–101; *see also* ***Frothing, overfrothing***
oxides, 12–119
plus-pressure process, 12–74
pneumatic, *see* ***Pneumatic flotation machines***
power consumption, 2–30, 35, 37, 40, 42, 47, 56, 58, 62, 113, 174, 175; 12–102; 20–53
precipitated copper, 2–69
pressure-reduction processes, 12–74
primary slime, 12–85
principles, 12–03; 19–127
pulp-body process, 12–47, 52, 73
vs. bubble-column process, 12–54, 61
pulp density, 12–98
rate of recovery, 2–39
reagents, *see* ***Activation, Collection, Conditioning, Depression, Frothing, Oils;*** *see also* specific reagents
cost, 12–102
feeding, 12–27, 34, 35, 88
place, *see* flowsheets, Secs. 2, 3, 3A
quantity, *see* specific reagents; *see also* flowsheets, Secs. 2, 3, 3A
selection, 12–86
recovery, 12–78; 19–181; *see also* specific mills, Secs. 2, 3, 3A
routings, 12–107
scavenging, 12–108
separate sand-slime flotation, 2–57, 64; 12–22, 96, 107
separating interfaces, 12–47
series *vs.* parallel treatment, 12–97
silicate minerals, 12–125; *see also* ***Silicates***
single sulphide, 12–108
size of feed, 2–02; 12–02, 51, 92 to 97, 108
skin flotation, 12–50
specific minerals, *see* the specific mineral
stage addition of reagents, 2–194; 12–88
stage flotation, 12–95
subaeration, *see* ***Subaeration flotation machines***

Flotation, table flotation (*see*)
temperature, 12–26, 27, 30, 39, 42, 99; *see also* flowsheet legends, Sec. 2
test records, 19–178
testing, 19–174 to 185
time-factor, 12–28, 39, 78, 81, 97; *see also* flowsheet legends, Sec. 2
vacuum process, 12–74
water supply, 12–85
Flour, causticized, 15–06
Flow, charts, 20–21, 25, 26, 32
measurement, 20–18, 20, 22
pipe, 20–25 to 27
pulp, 8–56
spigot, 8–56
water, 20–18 to 28
Flowsheet, 2–02 to 16
condensed, 2–06, 11
design, 2–02, 14, 15; 20–76
elements of, 2–16
field notes, 2–06
flotation, 12–103
general data, 2–11
line form, 2–03
pictorial, 2–04
presentation, 2–06; 12–103
principles, 2–02
segregated form, 2–06
selection of, 2–01
type, 1–04
vs. ratio of concentration, 2–15
work-up from field notes, 2–10
Flume, design, 20–33
sizing in, 10–12
washers, 16–12
Fluorescence, 14–05; 19–93
Fluoride ion, 12–29
Fluorspar, 3–30 to 35
decrepitation, 3–30; 14–24
depression, 12–34, 35
flotation, 12–13, 16, 31, 34, 35, 123
grinding, 6–34
jigging, 11–40
pneumatic separation, 11–139
production, 1–02; 3–31
sink-float, 11–120
tabling, 11–40
Foamite, 20–71
Fontana Dam, 3–110
Force, equivalents, 22–63
Formic acid, coagulant, 20–39
Formulas, milling, 19–189 to 208
Forrester flotation cell, 12–58
patent, 12–03
performance, 2–37, 58, 61, 68; 12–59
Fort Dodge Gypsum Co., 3–42
Fort Worth Sand & Gravel Co., 7–32
Foundations, bearing pressures, 20–42
concrete, 20–44; *see also Concrete*
depth, 20–44
designing, 20–77
for heavy vibrating loads, 20–44
kinds, 20–44
mill, 20–41
Foundry ashes, grinding, 6–01, 02
in Woodbury jig, 11–20
Frame, 11–130
Francis formula, 20–20, 22
Francoeur Gold Mining Co., 14–13
Franklinite, magnetic separation, 2–164; 13–24
French process, 3–119
Freight rates, concentrates, 20–07, 08, 80
effect on flowsheet, 2–15
French coefficient, 3–107
Frequency, motor, *see Motor, frequency*
Fresnillo Co., 4–94; 5–43; 13–35
Freyn tower, 9–17
Friar Tuck mine, 16–19
Frick, H. C., Coke Co., 18–43
Friction, angle of, 18–06
head, 20–19, 22, 31
pipe factors, 20–24
Frit (enamel), grinding, 6–34, 49
Froment process, 12–74
Froth, breaking, 2–168; 15–20
Froth flotation, 12–01, 02, 52; *see also Flotation*
Frothing, flotation, 12–40 to 47
acid pulps, 12–29, 42
adsorption of soluble frother, 12–54
agents, 12–42 to 46; *see also* specific reagents
agitation effect, 12–76
alkaline pulps, 12–29, 32, 42
cationic collectors, 12–16, 18
characteristics of good froth, 12–42, 95
control, 12–46
definition, 12–03, 40
effect, of conditioning agents, 12–46
of lime, 12–45
of soda ash, 12–26
of sodium silicate, 12–35
of sodium sulphide, 12–35
ideal frother, 12–43
in nonmetallic flotation, 12–47
mixtures, 12–43
overfrothing, 12–12, 21, 42, 87, 101
quantity of reagent, 12–44, 87
soap, 12–13, 45
temperature effects, 12–42
theory, 12–41
vs. molecular weight of reagent, 12–45
Fuel, power-plant, 20–64
technology, 1–01
Fuller, cement cooler, 3A–26
clinker cooler, 3A–23
pulverizer, 6–10
performance, 6–26 to 43
Fuller-Kinyon, dry-blending system, 3A–14
pump, 18–54
Fuller's earth, 3–35
grinding, 6–35
production, 1–02

Galena, activation, 12–26
depression, 12–24, 26, 30, 32, 36, 112
flotation, 12–08, 09, 38, 88, 109
grinding, 6–46
reactivation, 12–26
settling velocity in water, 8–04
soap flotation, 12–25
Galigher sampler, 19–56
Gallium, 2–69
Gallon, 22–63, 64
Gangue, 1–01
Ganister, grinding, 6–35
Gapeng Consolidated, 2–226
Garfield table, 11–79 to 81
Garnet, 3–36
flotation, 2–24
grinding, 6–35
jigging, 11–43
magnetic separation, 13–19, 25
pneumatic concentration, 11–139
production, 1–02
sink-float, 11–119
Gas, viscosity, 2–23
Gasoline engines, 20–64, 65

Gaudin, distribution function, 19–146
selectivity index, 19–195
Gayco air classifier, 6–26, 33, 35, 41, 43; 9–33
Gayford flotation machine, 12–72
Gearing, 20–55
Geary feeder, cost and weight, 20–86
Geary-Jennings sampler, 19–46
Geco, flotation machine, 12–70
sampler, 19–46
cost and weight, 20–91
subaeration flotation machine, cost and weight, 20–86
Geevor mill, 11–92
Gelatin, 12–33; 15–08
Geldenhuis Deep, 5–94
Gem minerals, 3–37
Gennamari mines, 11–41
Genter thickener, 15–24
Geometry, 21–20 to 28
analytic, 21–33
Germanium, 2–70
Getchell Mine, 4–36; 5–65, 113; 20–13, 53
Gibson amalgamator, 14–13
Gill, 22–63
Gill furnace, 3–119
Gilsonite, 3–10
oiling of, 12–06
Glass, grinding, 6–49
sand, *see* ***Sand, glass***
Gleason Mine, 2–74
Globe & Phoenix Mine, 14–20
Glue, 12–33; 15–06, 08, 09
Glycerine, 12–43
Golconda mill, 12–59
Gold, 2–70
arsenical ores, 2–72
clean-up of old plants, 2–128
complexing, 12–36
custom milling, charges, 2–255
deposits, 2–72
dredging, *see* ***Dredging, gold***
mills, small, 2–123 to 128
ore, 2–70
concentration, 2–71 to 128
batea, 11–57
Bendelari jigs, 11–25
blanket table, 11–132, 134
canvas table, 11–131
cost, 2–75, 76, 80 to 82, 92 to 94, 96, 97, 99, 102, 103, 105, 109, 112, 113, 115, 116, 118, 120, 121, 123, 128
dredging, *see* ***Dredging, gold***
drift-gravel plant, 2–81, 84
flotation, 2–73, 91, 102 to 127; 12–10, 11, 13, 18, 26, 33 to 35, 117, 118
flowsheets, 2–73 to 128
grindability, 6–46
handpicking, 2–73
hold-up in grinding, 2–115; 5–104
hydraulicking, 2–81
jigging, 2–90, 99; 11–21, 23 to 28, 30, 31, 33, 43
Johnson concentrator, 11–135
labor, *see* specific mills, Sec. 2
mills, 2–97 to 128
cost, 2–75; 20–78
panning, 2–75; 11–56
placer, 2–75 to 97
pneumatic concentration, 11–137, 139
portable placer plant, 2–97
power consumption, 2–128; *see also* specific mills
recoveries, 2–75; *see also* specific mills
rocking, 2–75; 11–58
Gold, ore, concentration, shoveling in, 2–76
sluicing, *see* ***Sluice***
step, 2–114
tabling, 2–99, 101; 11–31, 64, 69, 71, 79, 88
vanner treatment, 11–92
water consumption, 2–128; *see also* specific mills
placers, 2–75
production, 1–02; 2–71
properties, 2–71
size in placers, 2–85
tables, 2–90, 93
trap, 2–99; 11–99, 104
uses, 2–70
Gold Hunter mill, 15–20; 17–12
Gold Road mill, 5–82; 8–09, 33; 14–06
Golden Anchor Mining Co., 2–116; 12–104; 14–20
Golden Belt Mines, 2–112; 12–104
Golden Chariot mill, 14–20
Golden Cycle Corp., 2–131
flotation, 12–28, 118
sampling cost, 19–71
thickening, 15–23, 26
Goulac, 3A–35; 12–32
Government Gold Mining Areas, 5–40, 104
Grade, definition, 7–01; 8–05
Graham Bros., 7–32
Grain, 22–64
Gram, 22–64
Granby Consolidated M., S. & P. Co., 2–62
cost of mill, 20–78
flotation, 12–105
water, 20–13, 15
Grand Central mill, 15–08
Grand Coulee Dam, 3–98; 3A–27; 7–53
Granite Rock Co., 10–16
Granulation processes, 12–49
Graphite, 3–38, 87
depression, 12–34
flotation, 3A–35; 12–02, 06, 129
grinding, 6–05, 26, 35, 46, 49
Gravel, 3–92 to 102
production, 1–02
scrubbing, 10–02, 06
specifications, 3–98
tabling, 11–76, 78
washing, 10–08, 10
Gravity concentrating mills, power consumption, 20–53
Gravity concentration, 11–01 to 140
apparatus, 11–04
applicability, 11–01
concentration criterion, 11–02
cost, *see* specific machines; *see also* pertinent flowsheet legends, Sec. 2
media, 11–02
principles, 11–01
processes, 11–04
Gravity plane, 20–03, 10
Grease, 4–99
table, 3–21; 12–50
Greased-surface concentrators, 12–50
Griffin mill, 6–09, 28, 38
Grindability, 5–109, 112, 117, 118; 6–45, 46; 19–95
Hardgrove, 6–45, 46; 19–98
testing, 19–95
unit, 19–95
Grinding, differential, 14–23
Grinding, dry; *see also* ***Grinding, wet***
aids, 3A–25, 40
air sweeping, 6–21, 47
ball charge, 6–47
ball coating, 6–15, 20
batch, 3–28; 6–01

Grinding, dry, capacity, 6–48
choice of mill, 6–45, 48
circuit guards, 6–49, 51
circuits, 6–50
classification of materials, 6–45
closed-circuit, 6–02, 20, 50, 51
control, 6–52
cost, 3–27
drying during, 6–08, 47
feed rate, 6–48
feed size, 6–45, 47, 48
feeding, 6–52
fixed-path mills, 6–03, 49
flowsheets, 6–50
gas sweeping, 6–21, 47
hardness of feed, 6–49
impact mills, 6–04
machines, attrition mill, 6–03
ball mill, *see* ***Ball mill, dry***
ball-bearing mills, 6–10
ball-tube mill, 6–18
batch mill, 6–12
buhr mills, 6–03
cage mill, 6–05
Cascade mill, 6–25
chaser mill, 6–06
choice, 6–26
classification, 6–02
comparison, 6–48
conical mill, 6–21, 47
dry pan, 6–06
hammer mill (*see*)
jar mill, 6–13
jet pulverizer, 6–05
micronizer, 6–05
pebble mill, 6–24
rod mill, 6–13
roller mills, 6–06
rolls, 6–06
screening ball mills, 6–16
maintenance, 6–48, 51, 52
moisture, 6–47
open-circuit, 6–02, 51
operation, 6–45
performance, 6–26 to 43
power, 6–48, 54
predrying, 6–47
products, 6–02, 47, 48, 51, 54
sound control, *see* ***Electric Ear***
speed, 6–47 to 49, 52
stage grinding, 6–20, 50
systems, 6–01
temperature, 6–53
tumbling mills, 6–03, 11 to 54
various materials, *see* specific materials
vs. wet, 6–01, 15
Grinding, efficiency, 5–125; 19–98
Grinding mills, laboratory, 19–163
Grinding plant, floor areas, 20–48
power consumption, 20–53
Grinding, wet; *see also* ***Grinding, dry***
arrastre (*see*)
Canadian practice, 5–105
Chilean mill (*see*)
coarse, 5–01
cost, 2–33, 39, 42 to 44, 57, 59, 60, 62, 99, 103, 105, 113, 115, 118, 120, 167, 174, 183, 188, 197, 252; 5–32, 94, 111, 130
definition, 4–01; 5–01
differential, 5–49, 97, 103, 104; 14–23
efficiency, 5–125; 19–98
feed size, 5–108, 119
field, 5–01
fine, 5–01
Grinding, wet, flowsheets, 5–106; *see also* Secs. 2, 3, 3A
frothing in circuit, 5–108
grindability, 5–109, 112, 117, 118; 19–95
intermediate, 5–01
mechanism, 5–02
overgrinding, 5–109
pan, *see* ***Pan, grinding***
power consumption, 2–29, 35, 47, 58, 62, 113, 174, 175; 3A–37
pulp density, 5–123
reagents in circuit, 5–107
reduction ratios, 5–105
roller mills, 5–01
rubbing mills, 5–01
stage, 5–105
stamps (*see*)
tumbling mills (*see*)
vs. dry, 6–01, 15
Grizzly, 7–21 to 26
bars, 7–19
Burch, 7–26
cantilever, 2–48; 7–23
capacity, 7–23, 24
cataract, 2–170
chain, 7–24
cost and weight, 20–87
design, 7–22
disk, 7–25
feeder, 2–38
fixed, 7–21
heavy, 2–51; 7–22
live-roll, 7–25
moving, 7–24
Polius, 3–05
product, size, 7–26
rail, 7–21
ring, 3–95; 7–26
roller, 7–25
Ross, 7–26
self-cleaning, 7–24
shaking, 7–26; 20–87
Sheridan, 2–38
size, 7–22
slicing-bar, 3–05
slope, 2–51; 7–22
spool, 7–25
tapered, 7–21
tilting, 7–24
traveling, 7–25
use, 7–19
vibrating, 7–26
Grog, 3–89
grinding, 6–35
Ground sluicing, 2–76
Grudex system, 3A–22
Guanajuato Mines, 18–78
Guggenheim process, 3–68
Gulf Crushing Co., 3–60
Gulf Portland Cement Co., 3A–42
Gunite, 20–45
Gunnar Gold Mines, building, 20–48
classification, 8–08
conveying, 18–53
filtration, 16–09
grinding, 5–52, 56
power, 20–53
thickening, 15–16
Guysborough mill, 14–12, 13, 19
Gypsum, 3–40 to 42
flotation, 2–151; 12–23, 124
grinding, 6–03, 04, 18, 26, 35, 49
production, 1–02; 3–40
-slab roof, 20–46

Gyrasphere crusher, 4–52
Gyratory crusher, 4–21
adjustment, 4–26
attendance, 4–33
bell-head, 4–25
breaking head, 4–25
breaking point, 4–33
capacity, 4–29, 32
choice, 4–36
clogging, 2–44; 4–22, 24, 26, 33, 36
concaves, 4–25
construction, 4–22
cost, 4–35; 20–87
crane service, 4–33
efficiency, 4–33, 34
fall through, 4–33
feed size, 4–29
feeding, 4–33
fixed-spindle type, 4–25, 31, 42
hand of, 4–22
long-shaft type, 4–24
lost time, 4–33
lubrication, 2–51; 4–26
maintenance, 4–34
mantle, 4–26
manufacturers, 4–26
manufacturers' data, 4–23 to 25
nip angle, 4–29
performance, 4–27, 31
power, 4–32
product, 4–30, 34, 36
reduction ratio, 4–29
short-shaft type, 4–21
size ratings, 4–21
speed, 4–26
supported-spindle type, 4–25
suspended-spindle type, 4–21
throw, 4–26
vs. jaw crusher, 4–34
wear, *see* legends of mills, Sec. 2
weight, 4–23, 24; 20–87

Halides, 1–02
Halite, activation, 12–32
flotation, 12–124
Halkyn District United Mines, 2–166
feeder, 18–104
flotation, 12–106
jigging, 11–41
sink-float, 11–114
Halkyn jig, 11–41; *see also Hancock jig*
Hammer mill, 4–77; 6–04
anvil clearance, 4–85, 86
applicability, 4–77; 10–16
capacity, 4–86
closed-circuit operation, 4–86
construction, 4–78
feed, 4–77, 81, 85, 86
for sample grinding, 19–70
forces in, 4–81
grinding in, 6–04
hammers, 4–79
number, 4–84
wear, 3–110; 4–84, 87
horizontal, 6–04
impactor, 4–84
maintenance, 4–87
manufacturers, 4–81
manufacturers' data, 4–82, 83
moisture, 4–86
operation, 4–84
performance, 3A–32, 34; 4–83; 6–38, 40
power, 3A–30; 4–86
product, 4–84, 86
Hammer mill, reduction ratio, 4–85
shape of product, 4–86
speed, 4–84, 85; 6–52
utility, 6–49
Hancock jig, capacity, 11–35, 36, 40, 41
construction, 11–33, 41
copper ore, 11–35, 39
feed size, 11–35, 36, 39, 41, 42
fluorspar, 11–40
lead ore, 11–35, 39, 41
manganese ore, 11–41
operation, 11–34
performance, 11–35, 36, 39, 40, 41
power, 11–35, 36, 39, 40
ragging, 11–34, 36
size, 11–33
speed, 11–34, 36, 39
stroke, 11–34, 36, 39
utility, 11–35
vs. Harz, 11–39
vs. shaking table, 11–74
vs. Woodbury, 11–39
water, 11–35, 36, 39, 41
Hand jigging, 11–43 to 46
Hand picking, *see Hand sorting*
Hand sampling; *see Sampling, hand*
Hand sorting, 14–01 to 09
advantages, 14–01
calculations, 19–203
conveyors, 3–31; 14–03
cost, 14–05 to 07
economics, 14–09
floors, 14–02
jig concentrate, 11–11
lighting, 14–05
operation, 14–05
performance, 2–31; 3–28; 14–05
size sorted, 14–05
surfaces, 14–02
table, 2–32; 14–03, 04
testing, 19–168
tilting chute, 2–32
tin ore, 11–13
Hanger, line-shaft, 20–54
Hannan's North, 14–05
Hanover Bessemer Iron & Copper Co., 13–28
Hard-facing, 4–99
Hard Rock Mine, 5–102, 104
Hardgrove grindability, 6–26
Hardinge, classifier, air, 9–35
countercurrent type, 8–19
hydro-bowl type, 8–29
loop type, 9–35
installation, 6–26 to 43
reverse-current, 6–26 to 43
rotary, 6–31, 39
spray washer, 9–17
super-thickener, 15–25
thickener, 15–14
Hardness, metals, 2–17
minerals, 5–119
Hardy-Smith buddle jig, 11–42
Harris Clay Co., 3–15
Hartford mill, 2–127
Harz jig, 11–09 to 22
capacity, 11–10 to 13, 22
construction, 11–09, 11, 12
feed size, 11–09 to 13
fluorspar, 3–32
lead-silver ore, 11–09
lead-zinc ore, 11–09, 11
manganese ore, 11–11
performance, 11–09, 22
power, 11–10, 13, 55

Harz jig, ragging, 11–09, 11 to 13
size, 11–09 to 13
speed, 11–09 to 13, 22
stroke, 11–09, 10, 12, 13, 22
tin ore, 11–11, 29
tungsten ore, 11–11
vs. other jigs, 11–22, 24, 39, 40, 73
water, 11–10, 12, 13
Haulage, *see* specific vehicles
Hawkeye Portland Cement Co., 3A–12
Hayden, *see* ***Ray*** (Nevada Cons. Copper Co.)
Haydite, 20–46
Hayes Milling Co., 17–07
Haynes, patent, 12–02
Hazen-Williams formula, 20–26
Head, equivalents, 22–59
Hearing flotation machine, 12–57
Heat, balance, 19–190
conductivity, 2–17; 17–02
content, fuels, 20–64, 66
equivalents, 22–59, 62
losses, building, 20–69
radiation, 17–15
of fusion, metals, 2–17
specific, *see* ***Specific heats***
transfer, 17–03
in drying, 17–18
Heating, 20–68 to 71
and quenching, 4–92
cost, 2–103, 113; 20–71
electric, 20–71
heat required, 17–03
hot-water, 20–70
mills, 20–68; *see also* specific mills, Sec. 2
steam, 20–69
stoves, 20–71
unit heaters, 20–70
Heavy-liquid separation, *see* ***Sink-float separation***
Hecla Mining Co., flotation, 2–154; 12–114; 14–05; 19–55, 67
Hedley Gold Mining Co., 4–15; 5–38; 20–02
Hedrick Sand & Gravel Co., 10–12
Helix, 21–42
Heller screen, 7–20
Hematite; *see also* ***Iron ore***
activation, 12–35
flotation, 12–12, 16, 25, 120
grinding, 6–35, 36, 46; 14–23
magnetic separation, 13–33
Henry Nourse Mine, 18–92
Herbert, T. L., Co., 11–78
Hercules mill, *see* ***Bradley Hercules mill***
Hillside Fluorspar Mines, 3–31; 18–78
Hiwassee Dam, 3–109
Hodge jig, 11–18
Hog Mountain mill, 12–118
Hogshead, 22–63
Hollinger Consolidated Gold Mines, ball milling, 5–07, 13, 14, 20, 22 to 24, 27, 28, 30, 32, 39, 51, 52, 79, 83, 100, 106, 118 to 120, 122, 128, 129
crushing, 4–75
dust collection, 9–28
filtration, 16–08, 17, 21
haulage, 20–10
pumping, 18–84, 90
screening, 7–21
thickening, 15–23
Homestake Mining Co., 2–99
amalgamation, 14–12, 17, 22
building, 20–44, 46
chutes, 18–67
classifying, 8–09, 32, 46
conveying, 18–32, 47
Homestake Mining Co., crushing, 4–16, 27, 51, 89
grinding, 5–36, 113, 118
launders, 18–78
power, 20–53
sampling, 19–53
screening, 7–23
stamps, 4–89, 90
storage, 20–11
thickening, 15–13, 23
water, 20–13
Hong Kong Mines, 2–158; 12–106
Hoop tension, 20–17
Hooper, pneumatic jig, 11–136
vanning jig, 11–43
Horn Silver mill, 15–08
Horsepower, equivalents, 22–62
Howe Sound Co., Holden mill, 2–58; 12–106, 114; 20–78
Howes Cave, cement plant, 5–91
Hoyle mill, 5–68
Hudson Bay Mining & Smelting Co., 4–66; 5–68; 20–68, 71
Hudson Coal Co., 18–67
Hudson River Stone Corp., 20–65
Huitzuco, Exploradora de Mercurio de, 2–207
Humboldt jig, 11–42; *see also* ***Hancock jig***
Humphreys Gold Corp., 11–135
Humphreys spiral concentrator, 11–135
Hunt (-Dunn) flotation cell, 2–45, 49; 12–59
Huntington mill, 5–132
Hutch, 11–09
Hvitafors concentrator, 2–145
Hydraulic, classifier, 8–43; *see also* specific machines
banking in, 8–57
Bunker Hill, 8–50
Concenco, 8–54
definition, 8–06
Deister, 8–48
Delano, 8–55
design, 8–55
efficiency, 8–44
Evans, 8–44
Fahrenwald, 8–49
free-settling, 8–43
hindered-settling, 8–47
Pellett, 8–53; 11–67
placing in mill, 20–47
Richards, 8–44, 48
Richards-Janney, 8–48
sorting columns, 8–45, 47, 48
spigot discharge, 8–56
St. Joe, 8–54
treating jig hutch, 11–10
use, 8–43
washing in, 10–13
gradient, 20–23
slope of, 20–25
mean depth, 20–24
radius, 20–24
water, 8–43
Hydraulicking, 2–81, 226; 10–02
Hydraulics, 20–17 to 34
Hydro-bowl classifier, 8–29
Auto-vortex classifier, 3–97, 110; 8–31
Hydro classifier, 8–29
Hydroseparator, 8–30
Hydrocarbon, 12–02
coating by, 12–06
radicals in collectors, 12–06
Hydrochloric acid, 15–08
coagulant, 20–39
Hydrogen ion, *see* ***Acid***
Hydrograph, 20–15

Hydromotor jig, 11–28
Hydroseal pump, *see Centrifugal sand pump*
Hydro-volute, 9–14
Hydroxyl ion, 12–31; *see also Alkali, carriers*
Hy-grade Manganese Production & Sales Corp., 2–203
Hyperbola, 21–38
  area, 21–26
  radius, 21–47
Hyperbolic functions, 22–51
Hypocycloid, 21–26, 41, 47
Hypotrochoid, 21–41

Iceland spar, 3–42
Icosahedron, 21–27
Idaho Gold Mining Co., dredge, 2–94
Idaho-Maryland Mines Corp., 2–109
  chutes, 18–68
  classifying, 8–09, 32, 33
  filtration, 16–07, 08
  flotation, 12–34, 63, 104
  grinding, 5–84
  thickening, 15–16, 17
Idlers, tightening, 20–54
Illuminating gas, in flotation, 12–35
Illumination, methods, 14–05 to 09; 19–75, 78, 83, 90; 20–66
Ilmenite, flotation, 12–119
  grinding, 6–23, 36
  magnetic separation, 13–19
Ima Mines Corp., 2–248
Impact crusher, 2–31; 4–87
Impactor, *see Hammer mill*
Impinger dust sampler, 19–57
Inches-feet-millimeters, 22–60
Independence mill, 5–105
Indium, 2–133
Industrial minerals, 3–01 to 124
Infrasizer, 19–115
Infusorial earth, grinding, 6–05
Inland Lime & Stone Co., 3–47
Inspiration Copper Co., bin, 18–12, 17
  crushing, 4–67
  feeders, 18–99
  flotation cell, 12–61
  grinding, 5–118
  launders, 18–69
  location of mill, 20–02, 03
  ore, 20–02, 03
  power, 20–53
  storage, 20–11
  tailing disposal, 20–36
  water, 20–13, 15
Installation of machinery, cost of, 20–78, 80 to 93
Instruments, cement-kiln, 3A–25
Insulation, 17–15; 20–45
Insurance, fire, 20–73
Integrals, 21–49
Interest, 21–19
  compound, table, 22–54
Interlock, electrical, 19–65
International Agricultural Corp., 3–72; 18–25
International Minerals & Chemical Corp., 3–75
International Nickel Co., 2–214
  building, 20–45
  crushing, 4–05, 67, 73
  filtration, 16–10
  flotation, 12–61, 85, 88, 115
  grinding, 5–13, 47, 50, 51, 99, 102, 103, 117, 119, 127; 6–51
  hand sorting, 14–02, 05
  magnetic separation, 13–18
  screening, 7–18, 45, 53
  tabling, 11–82
International Smelting & Refining Co., 2–193
  elevators, 18–57
  flotation, 12–10, 92
  grinding, 5–84
  launders, 18–69
  thickening, 15–16, 17
Interpolation, 21–15
Interstate Zinc & Lead Co., 14–06
Involute, 21–41, 47
Iridium, 2–133
Iridosmine, 2–217
Iron, 2–134 to 151
  Alabama oölitic ore, 2–150
  complexing, 12–34, 36
  grinding, 6–36, 46
  ion, suppression, 12–35
  manganiferous ore, 2–150
  ore, 2–134; *see also Hematite*
    concentration, cost, 2–137, 140, 147, 149
      crushing plants, 2–136
      drying, 2–134
      experimental, 2–149
      flotation, 2–150; 10–08; 12–12, 13, 16, 120
      grinding, 6–46
      jigging, 2–138, 147; 11–21, 32, 42, 124, 125
      ratio of concentration, 2–137
      recovery, 2–137
      roasting-magnetic, 2–140
      salts, 12–31, 34
      screening, 2–134, 147
      siderite ore, 2–148
      sink-float, 2–139; 11–114, 118, 122
      sintering, 2–136
      sulphide, flotation, 12–109
      tabling, 11–86
      washing, 2–137, 147; 10–07
    selling, 2–136, 264
  price, 2–136, 264
  production, 1–02; 2–135
  removal, 10–16
  sulphides, differential flotation, 12–116
  treatment, 2–136
  uses, 2–134
Isourea, 12–16

James jig, 11–43
Janney, mechanical flotation machine, 12–77
  mechanical-air flotation machine, 12–61, 78
Jar mill, 6–13
Jarosites, flotation, 12–121
Jasper-Stacy Co., 11–25
Jaw crusher, 4–02
  Blake crusher (*see*)
  breaking point, 4–18
  capacity, 4–11
  choice, 4–13, 36
  clogging, 4–07, 11
  comparison of, 4–21
  cost of operation, 4–19
  Dodge crusher, 4–19, 21
  efficiency, 4–17
  feeding, 4–12, 13, 18
  horizontal-pitman type, 4–19
  nip angle, 4–11, 12
  performance, 4–15; *see also* flowsheet legends, Sec. 2
  power, 4–05
  price, 4–35; 20–87
  product, 4–18, 36
  reduction ratio, 4–12
  single-toggle type, 4–19, 21
  vs. gyratory, 4–34
  wear, *see* legends of mills, Sec. 2
  weight, 4–03, 19 to 21; 20–87

Jet, 20–20
collector, 19–61
pulverizer, 6–05
Jig-back, 20–10
Jigging, 11–04 to 55; *see also* ***Jigs***
abandonment, 2–15; 11–39
cleaning, 11–13, 25, 26, 30
concentration criterion, 11–08
control, 11–52
cost, 2–167; 11–55
feed, rate, 11–53, 54
size, 11–08, 53; *see also* specific jigs
gold, placer, 2–90
hand, *see* ***Hand jigging***
hutch making, 11–13, 17, 26, 34, 39, 50, 51
in grinding circuits, 11–20, 24, 26 to 28, 30, 31, 43; *see also* Gold-mill flowsheets, Sec. 2
on dredges, 2–90
operation, 11–52
ores, *see* specific ores
performance, *see* specific jigs
power, 11–55; *see also* specific jigs
principles, 11–04, 46
pulsion, 11–46, 53
roughing, 11–13, 25, 26, 31, 41, 47
separating layer, 11–46, 53
stroke, 11–46, 53
suction, 11–2, 14, 44, 52, 54
tin ore, 2–224
unsound stone, 10–16
vs. sink-float, 11–16, 124
vs. sluicing, 11–25
vs. tabling, 11–70, 73
water, 11–47, 52, 55, 74; *see also* specific jigs
Jigs, 11–04 to 55; *see also* specific jigs; ***Jigging***
action in, 11–05, 08, 46
air-pulsated, 11–08, 32
attendance, 11–10, 25, 36
bed, 11–04, 09, 10, 12, 22, 27, 29, 31, 34, 36, 42, 46, 47, 52, 53
box, 11–51
bull, *see* ***Bull jig***
capacity, 11–54; *see also* specific jigs
classifier, 11–10, 20
compartments, 11–48
concentrate draws, 11–09, 11, 13, 15, 22, 23, 34, 50
construction, *see* specific jigs
currents, 11–04, 08
descriptions, *see* specific jigs
design, 11–47
desliming, 11–19
diaphragm, 11–05, 08, 23
drop, 11–49; *see also* specific jigs
feeding, 11–51, 54
fixed-sieve, 11–05, 08, 09
grates, 11–49, 50; *see also* specific jigs
hand, *see* ***Hand jigging***
lost time, 11–10, 36, 39
mill, cost, 20–78
mortar, *see* ***Mortar jig***
movable-sieve, 11–05, 08, 33
paddle, 11–05, 08
Placer, 2–90; 11–25
plunger, 11–05, 08
product, sizing-assay, 11–18, 20, 28, 36
Pulsator, 11–05, 08, 29
quick-return, 11–17, 18, 19
ragging, 11–54; *see also* specific jigs
screens, 11–09, 10, 12 to 14, 16, 17, 19, 20, 22 to 27, 34, 36, 39, 41, 47, 49, 50
speed, *see* specific jigs
stroke, 11–52, 53; *see also* specific jigs
types, 11–01, 05, 08
Jigs, vanning jig, *see* ***Hooper jig***
water, 11–48, 49, 52, 55; *see also* specific jigs
Johns-Manville Co., 4–09
Johnson rotary concentrator, 11–135
Jones riffle, 19–33
Joule, equivalents, 22–59
Jumbo mill, 3–05

K & K machine, 12–62
Kalgoorlie State Battery, 19–37
Kameri Gold Dredging Co., 2–96
Kaolin, *see* ***Clay***
Kaolin, Inc., 3–16
Kapak, 3–10
Katanga, Union Minière du Haut—, 2–217; 12–13, 121; 18–27
Kelowna Exploration Co., 2–102
crushing, 4–16, 48
flotation, 12–104
grinding, 5–91, 113
jigging, 11–24
Kennedy Mining & Milling Co., 18–92
Kent Maxecon mill, 6–06, 29, 37, 39
Kerosene gel, 2–168
Kerr Addison Gold Mines, 5–08, 113, 118; 20–44, 46, 48, 53
Kieve, bed, 11–04
Kiln, cement, 3A–18 to 21
Kiln, lime, 3–52 to 59
capacity, 3–54
cost, 3–58, 60; 20–88
feed size, 3–56
fuel consumption, 3–58, 59
insulation, 3–54
lining, 3–54
rotary, 3–56 to 59
shaft, 3–52 to 56
temperature, 3–49, 52, 57
thermal efficiency, 3–59
time-factor, 3–49, 56
weight, 20–88
Kiln, magnesite, 3–62
Kilogram, 22–64
Kirkland Lake Gold Mines, Ltd., 8–30; 19–54, 71
Kister dredge, 2–90
Kominuter, 6–17, 29
Konimeter, 19–61
Kramer Mines, Inc., 3–34
Kraut, flotation machine, 2–110; 12–63
jig, *see* ***Hydromotor jig***
Krome Corp., 2–24
Krupp ball mill, 6–16, 29, 30
Kryolith, grinding, 6–25
Kutter's coefficient, 20–26, 42
Kvina Mines, 12–75
Kyanite, 3–43, 87
flotation, 12–16, 34, 127
pneumatic concentration, 11–139
Kyanite Products Corp., 3–45

Labor, mill; for tons per man-shift and costs per ton, *see* mill descriptions in Secs. 2, 3, 3A, and ***Attendance*** under specific machines and processes
Lactic acid, 12–32, 43
La Grange dredge, 2–93
La Grange Mine, 11–97, 98, 101, 103
Lake Shore Mines, ball milling, 5–08, 13, 20, 23, 25, 27, 28, 32, 36, 38, 39, 94, 97, 98, 100, 108, 110, 118 to 120, 122, 124, 128
classifying, 8–35
flotation, 12–63
grindability, 6–46
Infrasizer tests, 19–116

Lake View & Star mill, 2–73
Lamp black, grinding, 6–36
Lamps, electric, 20–66 to 68
Lancha Plana Gold Dredging Co., 2–95
Land plaster, 3–40
Langbeinite, flotation, 12–125
Launders, 18–68 to 79
bends, 18–75
capacity, 18–72 to 74
concrete, 18–74
cost, 18–77; 20–49, 50
depth, 18–76
designing, 18–74; 20–78
flow, 18–72 to 74
friction, 18–71 to 74, 78
lining, 18–69, 70, 76; 20–35, 49
performance, 18–69 to 71
pipe, 18–78; 20–49
pulp density, 18–69 to 71
shaking, 20–49
shape, 18–74
size of material, 18–69, 70, 72
slope, 11–12; 18–71, 74; 20–49
splitting, 18–78
tailing, 2–51; 20–35 to 37
turns, 18–75
velocities in, 20–35
Lava Cap Mining Co., 5–104
Lawrence Stone & Gravel Co., 10–10
Layer, *see* ***Bed***
Le Molybdène, 2–213
Leaching, 1–01; 14–24
Lead, 2–151
concentrate, assay, 2–154
concentration, 2–153 to 198
cost, 2–154; *see also* specific mills, Sec. 2
flotation, 12–08, 10, 11, 26, 34
hand jigging, 11–44
jigging, 11–09, 10, 11, 15, 17, 22, 35, 36, 39 to 41, 125
labor, 2–155; *see also* specific mills, Sec. 2
oxidized ores, flotation, 2–191; 12–120, 121
power consumption, 2–155; *see also* specific mills, Sec. 2
recovery, 2–154; *see also* specific mills, Sec. 2
sink-float, 11–114, 118, 119, 122
sluicing, 11–95
tabling, 11–64, 68, 69, 71, 72, 82, 83, 86 to 88
vanner treatment, 11–92
-copper differential flotation, 2–198; 12–115
in amalgamation, 14–19
ion, resurfacing by, 12–27, 32
-iron differential flotation, 12–114
ores, 2–151
oxidized ore, 2–191 to 193
price, 2–152
production, 1–02; 2–151
selling, 2–262
uses, 2–151
-zinc ore, concentration (*see*)
Leadwood mill (St. Joseph Lead Co.), classifying, 8–54, 56
crushing, 4–31, 61
filtration, 16–07, 10
grinding, 5–56
pumping, 18–82
screening, 7–41
thickening, 15–17
Lead-zinc ore, concentration, 2–153 to 198
costs, 2–155, 167, 170, 174, 183, 188, 193, 197
de-leading zinc concentrate, 2–177
flotation, 12–113; *see also* specific mills, Sec. 2
labor, 2–155; *see also* specific mills, Sec. 2
Lead-zinc ore, concentration, power consumption, 2–155; *see also* specific mills, Sec. 2
sink-float, 2–166, 182
tailing reclamation, 2–194
Least squares, 21–17, 57
Leeuwpoort mill, 11–92
Lehigh Coal & Navigation Co., 8–50
Lehigh Portland Cement Co., 6–44
Leitch Gold Mines, 14–19
Lenox, Inc., 13–21
Lepol system, 3A–22
Le Roi No. 2 mill, 15–02
Levitation, flotation, 12–37 to 47
agitation-froth process, 12–76
boiling process, 12–73
bubble attachment, 12–37, 39, 52, 53; 19–177
bubble-column action, 12–53, 79
chemical-generation process, 12–73
contact angles (*see*)
definition, 12–03, 37
effect of oil, 12–39
floating plates, 12–37
gas precipitation, 12–39, 52, 76
lifting by bubbles, 12–37
pulp-body action, 12–52, 54
table flotation, 12–83
with oil films, 12–06
Liberation, 5–01, 125
Liberty Bell mill, 4–31; 5–24; 11–64; 13–36; 15–16, 23; 17–07
Liberty Limestone Corp., 3–47
Licorice, 12–33
Lighting, 20–66
cost, 2–103, 113
power, 2–35, 58, 113, 174
Lignin sulphonates, 12–32
Lignite, for fuel, 20–64
Lime, *see also* ***Calcium hydroxide***
burning, 3–51 to 60
dissociation rate, 3–51, 53
kilns, 3–52 to 59
shell, 3–49, 58
temperature, 3–52, 57
feeder, cost and weight, 12–89; 20–85
flocculant, 2–132; 15–06 to 08, 10, 11
for breaking froth, 15–20
grinding, 6–03, 04, 08, 37, 46
in flotation, 12–26, 27, 29, 31, 32, 34, 35, 46, 88, 89
milk-of-lime, 12–32
production, 1–02
Limestone, 3–46 to 60, 87
grinding, 6–04, 11, 18, 23, 24, 26, 37, 38, 46, 48, 49
Lincoln Gold Dredging Co., 2–97
Linden Zinc Co., 2–162
Linear measure, equivalents, 22–60, 62
Line-shaft drives, 20–53
Liners, tumbling-mill, 5–17 to 26
action, 5–18, 19
backing, 5–20
Barry, 5–24
Black, 5–23, 39
bolts, 5–20
Britannia, 5–25, 129
choice of, 5–26
circumferential grooving, 5–23
clover-leaf, 5–24
Cobalt, 5–24, 39
cost, 5–23, 25
effect, on ball wear, 5–38
on power, 5–121
on product, 5–19
El Oro, 5–24

Liners, tumbling-mill, end, 5–20
for fine grinding, 5–23
Forbes, 5–24
Globe, 5–24
Howes, 5–18
Ironite, 5–24
Komata, 5–23
material, 5–19; 6–12
Osborn, 5–24, 94
Plymouth, 5–24
pocket, 5–24
porcelain, 6–12
rail-cement, 5–25
relining, 5–129
ribbed-plate, 5–23
rubber, 5–25
shiplap, 5–18
Silex, 5–23; 6–12
size, 5–18
smooth, 5–39
Straub, 5–19
thickness, 5–20
trunnion, 5–20
wave, 5–18
wear, 5–20, 21, 122; *see also* flowsheet legends, Sec. 2
wedge-bar, 5–18
weight, 5–54, 62; *see also* notes to performance tables, Sec. 5, and flowsheet legends, Sec. 2
Lines, straight, 21–21
equations for, 21–33, 34
length, 21–33
parallel, 21–34
perpendicular, 21–34
slope, 21–33, 43
Linneite, flotation, 12–110
Liquation, 14–24
Liquids, heavy, 11–04
Liter, 22–63, 64
Litharge, grinding, 6–38
Lithopone, grinding, 6–49
surface, 19–132
Lixiviation, 1–01
Locomotive, estimation of size, 20–08
haulage, cost, 20–05, 10
Diesel, 20–06, 10
gasoline, 20–05, 10
narrow-gage, 20–06, 10
standard-gage steam, 20–07, 10
storage-battery, 20–06, 10
trolley, 20–06, 10
Log washer, 10–05 to 07, 16
cost and weight, 20–93
magnetic, 13–20
performance, 2–147; 10–06
screw-type, 3–07
Logarithms, 21–02 to 04
antilogarithms, tables, 22–44
cologarithms, tables, 22–42
common, tables, 22–38
cosines, 22–46
cotangents, 22–48
errors in calculations, 21–03
Napierian, 21–04; 22–52
base, 22–41
natural, 21–04; 22–52
sines, 22–46
tangents, 22–48
trigonometric functions, 22–46 to 49
use of tables, 21–02
London Mines & Milling Co., 2–114; 12–104
Lone Star Cement Co., 12–123
Long-range product, 11–07
Long tom, 2–96; 11–104
Loop classifier, *see* ***Hardinge classifiers***
Loreto mill, 4–50; 5–36, 56, 84; 7–57
Lorol, 12–17
Lorolamine, 12–17
Lubrication, cost, 2–113
crushers, 2–55; 4–98
gyratory crushers, 4–26
jaw crushers, 4–06
screens, 7–70
tumbling mills, 5–130
Lucky Tiger Mining Co., 5–97; 12–111; 18–70
Lumber, cost and weight, 20–88
Lyell Comstock mill, 4–05
Lynn Sand & Stone Co., 9–26

MacDougall roaster, cost and weight, 20–90
Machine-shop equipment, cost and weight, 20–81 to 93
Machinery, cost and weight, 20–81 to 93
handling, 20–76 to 78; *see also* specific mills
MacIntosh flotation cell, 12–57, 79
cost and weight, 20–86
Mackower gas-adsorption apparatus, 19–130
Macquisten flotation machine, 12–51
Madsen Red Lake mill, 16–08, 17
Magma Copper Co., 2–39; 20–03
bin, 18–13, 22
concentrate handling, 20–52
concentration, 2–01
cost of mill, 20–78
crushing, 4–15, 48
feeders, 18–99
flotation, 12–99, 104
grinding, 5–22, 32, 56, 81, 103
ore, 11–68; 20–03
haulage, 20–09
power, 20–53
sampling, 19–55
screening, 7–38
tabling, 11–68
thickening, 15–17
water, 20–13
Magna, *see* ***Utah Copper Co.***
Magnesite, 3–61 to 63, 87
brick, 3–90
depression, 12–26
flotation, 12–25, 124
grinding, 6–38, 46, 49
production, 1–02
sink-float, 11–120
Magnesium, 2–198
chloride, 15–09
grinding, 6–01, 38
silicates, flotation, 12–126
sulphate, coagulant, 15–06
Magnet, 13–01
guard, 2–35; 13–34 to 36; *see also* specific mills, Sec. 2
permanent, 13–39
Magnet Cove Mill, 13–19
Magnetic, attractability of minerals, 13–02
circuit, 13–09
coercive force, 13–08, 38
Curie temperature, 13–08, 38
detector, 2–42
feeder, cost and weight, 20–85
field, 13–03, 05
energy, 13–09
flocculation, 13–37
flux, 13–06, 38
forces, 13–10
hysteresis, 13–38
inductance, 13–09
intensity, 13–03

Magnetic, materials, 13–38, 39
moment, 13–03
permeability, 13–01, 06, 08
magnetically soft materials, 13–38
temperature effects, 13–08
pole strength, 13–03
potential, 13–05
recalescence, 13–08
reluctance, 13–09
remanence, 13–08, 38
saturation, 13–07
screen, *see* ***Screen, Hum-mer; Jeffrey-Traylor; Utah***
separation, 13–01 to 40; *see also* ***Magnetic separators,*** and specific mills in Secs. 2, 3
applications, 13–02
cost, 2–140; *see also* under specific separators
direction of motion, 13–12
forces in, 13–13, 15
laboratory testing, 19–173
particle paths, 13–13
performance, *see* ***Magnetic separators***
plants, 2–140 to 149
principles, 13–10
susceptibility to, 13–02
tractive force, 13–11
wet *vs.* dry, 13–32
separators, 13–15 to 32
belt-type, 13–22
chute-type, 13–35
classification of, 13–15
cobber, 13–19
Crockett, 13-30
design, 13–37 to 40
drum-pulley machine, 13–18
drum-type, 13–15 to 17
Franz Ferro-filter, 13–21
Gröndal, 13–28, 37
in grinding circuits, 13–36
induced-types, 13–18
Linney, 13–31
log-washer type, 13–20
pole pieces, 13–37
pulley-type, 13–17, 35
Rapid, 13–26
Rapidity, 13–27
Roche wet belt machine, 13–20
Steffensen, 13–29
tray-type, 13–27
trough-type, 13–21
Ullrich, 13–29
Wenstrom, 13–17
wet, 13–19 to 21, 28 to 32
Wetherill, 13–13, 23
-Rowand, 13–24
winding, 13–39
susceptibility, 13–06
of minerals, 13–07, 19
theory, 13–02 to 10
units, 13–02 to 04
Magnetically soft materials, 13–38
Magnetism, induced, 13–06
roasting to cause, 2–140, 162; 13–25 to 27, 33
Magnetite, flotation, 12–120
magnetic separation, 13–16 to 18, 20 to 22, 28 to 32
Magnetization, time effects, 13–08
vs. impressed field, 13–07
Mahoning Mining Co., 3–32
Maitland mill, 4–48, 63
Malachite, flotation, 12–11, 121
Malayan dredges, jigging, 11–11, 16, 25, 29, 50
Malay States Tin, Ltd., 11–25
Malliri mill, 2–20
Malthas, 3–10
Malvern Clay Co., 4–38
Mammoth-St. Anthony, Ltd., 2–110
classifying, 8–32
filtration, 16–07
flotation, 12–104, 105, 113
grinding, 5–21, 36
thickening, 15–16, 17
Management, 1–01
Manganese, 2–198 to 206
chocolate clays, 2–204
ore, 2–198
concentration, 2–200 to 206
activation, 12–35
concentrate handling, 2–204
cost, 2–205
cost of plant, 2–203
flotation, 12–13, 27, 120, 121
grinding, 6–38, 46
hand sorting, 14–03
jigging, 11–11, 21, 22, 41
magnetic separation, 13–25
sink-float, 11–121
washing, 10–07, 09
selling, 2–265
production, 1–02; 2–199
treatment, 2–199
uses, 2–198
Manganese Corporation of America, 2–201
Manganiferous iron ore, 2–150
Manjak, 3–10
Marble, grinding, 6–07
Marcasite, depression, 12–30
flotation, 12–109
roasting to Fe_3O_4, 2–162
Marmatite, flotation, 2–178
Marquette Cement Mfg. Co., 3A–08
Martin, flotation patent, 12–03
sampler, 19–43, 66
Martite, concentration, 2–145
Mascot, *see American Zinc Co.*
Matahambre, Minas de, 2–37; 20–03
classifying, 8–09
crushing, 4–48, 50, 94
feeder, 18–101
flotation, 12–31, 59, 104
grinding, 5–81
power, 20–53
sampling, 19–55
screening, 7–29, 57
thickening, 15–16
water, 20–13
Material balance, 19–189
Materials, for mill construction, 20–44
Mathematical tables, 22–01 to 53
errors in, 21–02
interpolation in, 21–02, 15
Mathematics, 21–01 to 62; *see also* specific items
bibliography, 21–61
Mathieson Alkali Works, Lake Charles plant, 3–49
Saltville plant, 3–48
stockpiling, 18–26
Mawchi Mines, 2–239; 12–50
May duplex jig, 11–17
Mayflower Gravel Mining Co., 2–84
McCann riffle, 19–34
McGill, *see Nevada Cons. Mining Co.*
McIntyre Porcupine Mines, 2–104
building, 20–44, 45
classifying, 8–09, 32
conveying, 18–49
cost of mill, 20–78
crushing, 4–16, 27, 51, 65, 67

McIntyre Porcupine Mines, dust collection, 20–75
filtration, 16–13
flotation, 12–66, 104
grinding, 5–64, 91; 6–46
guard magnet, 13–35
screening, 7–42
storage, 20–11
thickening, 15–17
McLanahan-Stone jig, 11–21
Mechanical classifiers, 8–06 to 35; *see also* specific machines; legends of flowsheets in Secs. 2, 3, 3A
agitation, 8–25
air, *see Air sizing*
attendance, 8–29
baffles, 8–25
blade depth, 8–25
bowl-type, *see Bowl-rake classifier* and *Hydro-bowl classifier*
capacity, 8–28, 34
costs, 2–183
countercurrent classifier (*see*)
dilution, 8–27, 33
drag-belt classifier, 8–19
drag classifier (*see*)
dry, performance, 6–26 to 44
efficiency, 8–28, 35
feeding, 8–26, 28
height of overflow, 8–23
laboratory, 19–166
length, 8–26
maintenance, 8–29
operation, 8–22
performance, *see* specific machines; *see also* specific mills, Secs. 2, 3, 3A
power, 2–35; 8–29
principle of area, 8–22
rake classifier (*see*)
reagents, 8–28
sand-raking capacity, 8–25
slope, 8–22
speed, 8–24, 34
spiral classifier (*see*)
surging, 8–23
washing in, 10–12
water addition, 8–28
width, 8–26
Media, bedded, 11–04
flowing, 11–02
separating, 11–02
stationary, 11–02
Media mill, 11–13; 20–78
Medusa Portland Cement Co., 6–44, 51
Meerschaum, 3–63
Melones Mining Co., 11–64; 13–34
Melting point, metals, 2–17
Mensuration, plane figures, 21–24
solids, 21–26
Mercaptan, 12–06, 07, 10
Mercaptobenzothiazole, 12–11, 34
Mercury, 2–206 to 209
complexing, 12–36
-cyanide complex, 12–27
ion in flotation, 12–33
flotation, 2–207 to 209; 12–08
price, 2–206; 14–23
production, 1–02; 2–206
purification, 14–13
retorting, 2–208
cost, 2–207
Merrill filter, 16–19, 20
Merrill-Crowe precipitation, cost and weight of plant, 20–89
Mesabi Chief mill, 10–13; 18–24
Mesabi Iron Co., 2–142, 150; 5–65; 13–17, 21
Mesabi jig plant, 2–138
Mesh, 7–06
Metal salt-silicate depressant, 12–26, 34, 35
Metallic ions, in flotation, 12–33
Metallurgy, extractive, 1–01
Metals, 2–11 to 267
bibliography, 2–11
grinding, 6–01, 16, 26, 49
physical constants, 2–17
Meter, equivalents, 22–62
Metropolitan Sand & Gravel Corp., 3–97
Miag calcinator, 3A–22
Miami Copper Co., 2–47; 20–02, 03
ball *vs.* pebble mill, 5–32
classification, 8–08, 33
conveying, 18–36, 39
crushing, 4–51, 67, 72, 94
plant, 4–97
feeder, 18–102
flotation, 12–54, 56, 59, 61, 62, 90, 93, 95, 97, 105, 110, 115
grinding, 5–32, 57, 64 to 66, 97, 106, 112, 118
hand sorting, 14–02
lighting, 20–68
power, 20–53
screening, 7–21, 23, 57, 58, 71
smelter, 1–03
tailing disposal, 20–37
thickening, 15–17, 20
water, 20–13, 15
Mica, 3–64
depression, 12–32, 34
flotation, 3–17; 12–16, 25, 34, 127
grindability, 6–26, 46
grinding, 3–65
magnetic separation, 13–19
pneumatic concentration, 11–139
production, 1–02; 3–64
sheet, 3–65
Micelle, 12–33
Michigan Alkali Co., 4–38
Micron, equivalents, 22–62
Micronizer, 6–05
Microscope, 19–72 to 85
adjustment, 19–76 to 79
bibliography, 19–72, 82, 85
binocular, 19–72
condensers, 19–75
counting, 19–119
cover glasses, 19–74
dark-field, 19–75, 77, 79
illumination, 19–75, 78, 83
manufacturers, 19–72
metallurgical, 19–78
mounting pulps, 19–118
objectives, 19–74
oculars, 19–75
petrographic, 19–81
polishing specimens, 19–79
projection, 19–119
research, 19–74
sizing with, 19–118
testing with, 19–83 to 85
types, 19–72
Midget impinger, 19–57
Midvale, *see U. S. Sm., Ref., & Mining Co.*
Mill, building, arrangement of machines, 2–36, 52 to 55
cost, 20–80
durability, 20–44
enlargement, 20–42
erection, 20–41
floor areas, 20–48

Mill, building, floors, 20–41; *see also* specific mills
framework, 20–44
heating, *see* ***Heating, mills***
height of, 20–78
insulation, 2–103
machinery, cost, 20–79
materials for, 20–44; *see also* specific mills, Sec. 2, 3
Mesabi Iron Co., 2–143
Morenci, 2–52 to 55
reinforced concrete, 20–45
roof, 2–103
structural steel, 20–44
cost, 20–45
underground, 2–107; 20–45
volume, 20–79
walls, 2–103; 20–45
capacity, 1–03; 2–14
cost, 2–75, 127; 20–78, 80
of installing machinery, 20–78, 80 to 93
design, 2–15; 20–01
amortization, 20–43
arrangement of equipment, 20–47
enlargement, 20–42
gravity flow, 20–42
head room, 20–49
location, 20–01
method of procedure, 20–76
structural steel, 20–44, 79
type of mill, 20–42
unit arrangement, 20–42
location, 1–03; 20–01, 12, 34, 41
site, 20–41; *see also* specific mills, Sec. 2
Morenci, 2–52
terraced *vs.* flat, 20–42
Miller & Rinehart mill, 2–204
Milligram, 22–64
Millimeters-inches-feet, 22–60
Millimicron, equivalents, 22–62
Mine filling with tailing, 20–40
Mine La Motte (St. Joseph Lead Co.), 4–63; 5–43; 7–41; 8–39, 41, 54; 15–16, 17; 16–10; 18–82
Mineral Resources, Inc., 2–122; 12–105
Mineralogical analysis, 19–84
Minerals, composition, 22–67
conductivity, electrical, 13–43
identification, 19–82
magnetic susceptibility, 13–07
oxidation of, 12–04
production, 1–02; *see also* specific minerals and metals
solubility of, 12–04
specific gravity, 22–67
Minerals Separation (M-S), laboratory cell, 19–175
standard machine, 12–77
subaeration machine, 2–64, 68, 106, 171, 174, 176; 12–68
Minerec, 2–39, 69, 168; 12–11
Miner's inch, 20–19
Missouri-Kansas Zinc Corp., 14–23
Mixer, sample, 19–71
Moctezuma Copper Co. (Phelps Dodge), crushing, 4–27
dust collection, 20–75
flotation, 12–58, 94, 97
grinding, 5–43, 117, 118
launders, 18–76
location of mill, 20–02
ore, 20–02
power, 20–53
pumping, 18–86
screening, 7–23, 29
Moctezuma Copper Co., storage, 20–11
tabling, 11–64
tailing disposal, 20–35, 38
vanners, 11–92
water, 20–13
Modderfontein mill, 5–94
Mog, 5–108; 22–73
Moisture, 2–262
concentrate, 20–02
sampling, 2–262; 19–53
Molecules, mean paths, 9–06
size, 9–06
Molybdenite, depression, 12–28, 34
flotation, 2–49; 12–09, 24, 75, 88, 110
magnetic separation, 13–19
oiling of, 12–06
Molybdenum, 2–209 to 213
ore, 2–209
flotation, 12–09, 14
production, 1–02; 2–209
Molybdenum Corp. of America, 19–43; 20–03, 13
Molybdite, flotation, 12–120
Moment of inertia, 21–55
Moneta Porcupine mill, 5–82
Monitor, 10–02
Mono-rail, 20–05
Monroe Sand & Gravel Co., 10–02
Montan wax, 3–10
Monteponi mill, 2–163
Montezuma Apex Mining Co., 11–31; 12–72
Montgomery Gravel Co., 3–96
Mont Tsi, 2–74
Moorlight mill, 4–61; 13–25
Morenci, *see* ***Phelps Dodge Corp.***
Morning mill (Federal M. & S. Co.), 12–51, 63, 93, 114
Morris density controller, 8–60
Morris Kirkland mill, building, 5–106; 20–48, 53, 78
Morro Velho mill, 5–91; 11–135
Mortar jig, 2–32; 11–20
Motors, 20–55 to 58
cost and weight, 20–88
Motor-truck haulage, 20–05, 10
Mountain, cork, 3–04
leather, 3–04
wood, 3–04
Mountain City Copper Co., 2–38
chutes, 18–67
crushing, 4–15, 48
elevators, 18–57
flotation, 12–104
grinding, 5–84
launders, 18–69
ore, haulage, 20–04
screening, 7–51
storage, 20–11
Mountain Queen mill, 4–92
M-S, *see* ***Minerals Separation***
Mt. Isa Mines, Ltd., 2–183
building, 20–48, 94
concentration, 2–01
cost of mill, 20–78
dust collection, 20–75
flotation, 12–100, 101, 105, 107
grinding, 5–22, 67
power, 20–66
recovery, 2–154
sampling, 19–55, 71
Mt. Lyell Mining & Railway Co., 2–59
classifying, 8–09, 32, 37
crushing, 4–31, 50
deliming cone, 8–37

Mt. Lyell Mining & Railway Co., filtration, 16–07
flotation, 12–106
grinding, 5–83 to 85, 103
pumping, 18–83, 86
screening, 7–43
thickening, 15–16
Mt. Morgan, Ltd., 2–64; 12–96, 104; 19–112
Mud, box, 11–100
capping, 4–92
Mufulira Copper Mines, Ltd., 2–40
crushing, 4–28
filtration, 16–10, 17
flotation, 12–60
grinding, 5–68, 105
Muller, 3–45
Mullite, 3–87
Multiclone dust collector, 9–11
Murchie Mining Co., 12–63
Murex process, 2–241; 12–50

Nacozari, *see Moctezuma Copper Co.*
Naphthenic acids, 12–13
National Lead Co., El Portal mill, 3–09; 14–23
Titanium plant, 2–242; 13–31; 15–04
National Zinc Separating Co., 2–162
Natomas Gold Dredging Co., 2–87, 90 to 93; 11–23
Neill jig, 11–23
Nepheline, 3–26
Nepheline syenite, 3–30; 6–25
Nevada Consolidated Copper Co. (McGill), chutes, 18–67; *see also Chino, Ray*
classifying, 8–09, 32
conveying, 18–32, 36
crushing, 4–16, 51
feeder, 18–101
filtration, 16–10
flotation, 12–57, 59, 92
grinding, 5–65, 67, 106, 107, 118, 128
launders, 18–69
location of mill, 1–03; 20–01
ore, haulage, 20–04
pumping, 18–82
screening, 7–42, 47
smelter, 1–03
tabling, 11–67
thickening, 15–17
water, 20–13, 15, 31
Nevada-Massachusetts Co., 2–247; 20–03
classifying, 8–50
flotation, 12–122
lighting, 20–68
magnetic separation, 13–25
power, 20–53
screening, 7–29, 71
Nevada Packard mill, 5–24; 15–16
New Century jig, 11–18
New Cornelia (Phelps Dodge Corp.), 2–44
bin, 18–17
classifying, 8–16, 32
conveying, 18–36
crushing, 4–28, 50, 51, 67
dust collection, 20–75
feeders, 18–99
filtration, 16–07, 13
flotation, 12–60, 95, 98, 104
grinding, 5–08, 30, 56, 105, 112, 118
launders, 18–69
pumping, 18–82
screening, 7–42, 47
storage, 20–11
tailing disposal, 20–35
thickening, 15–17
water, 20–15
New Idria mill, 2–209
New Jersey Zinc Co. (New Jersey mills), 2–163
bins, 18–03
chutes, 18–67, 68
classification, 8–08, 33, 54
conveying, 18–32, 49, 51, 53
crushing, 4–28, 60 to 63, 65, 74
distributor, 18–107
drying, 17–07
elevators, 18–57
feeder, 18–101, 103
filtration, 16–10, 18
hand sorting, 14–05, 06
jig, 11–26, 50
jigging, 11–19
launders, 18–69
lighting, 20–68
magnetic separation, 13–24
pumping, 18–83
recovery, 2–154
screening, 7–26, 45, 54
tabling, 11–64, 67
thickening, 15–12, 16, 17
New Riverside Ochre Co., 3–08
New York Trap Rock Corp., 3–111; 7–31, 52
Newhouse crusher, 4–42
Newton's law, 8–02, 9–02
applicability, 11–02
Nickel, 2–213 to 217
complexing, 12–36
-ion resurfacing, 12–27
ore, concentration, 2–213 to 217
flotation, 2–214; 12–11
tabling, 11–82
Ninol, 12–17, 45
Nipissing Mining Co., 4–89, 90; 15–23; 16–21
N'Kana Mine, 18–42
Nitrates, 3–67
Nomography, 21–58
Nonmetallic minerals, flotation, 12–88
Noranda Mines, Ltd., 2–65
aerator, 2–62, 66; 12–33
building, 20–45
crushing, 4–16, 51, 67
filtration, 16–07, 09, 17
flotation, 12–33, 57, 92, 99, 104, 118
grinding, 5–113; 6–46
launders, 18–69
screening, 7–51, 56
Nordberg-Wood classifier, 8–40
Norris Dam, 4–79, 80, 81, 83, 86
North American Cement Co., 4–83
North Bloomfield Mine, 11–101 to 103
North Broken Hill, 11–17
North Camarines, 12–118
North River Garnet Co., 11–43, 139
North Star mill, 11–28
Norton Abrasives Co., 13–45
Nourse mill, 5–94
Nozzle, 20–19
Nujol, 12–18
Numerical aperture, 19–74

Ocher, 3–66; 6–03, 49
Octahedron, 21–27
Octave mill (A.S. & R. Co.), 2–109; 12–104
Ohio Brass Co., 11–20
Ohio Copper Co., 2–68
crushing, 4–58
leaching, 14–24
round tables, 11–129
screening, 7–26
tonnage sampling, 19–202
Ohio Marble Co., 3–47

Oil, clean storage, 20–72
coating, *see* ***Oils, neutral***
excess in flotation, 12–87
for fuel, 20–64
in froths, 12–39
lubricating, in pulps, 12–19, 24, 37, 54, 85
mixtures in flotation, 12–06
place of addition, 12–88
Oils, neutral, 12–18
at bubble surfaces, 12–39
coating by, 12–06, 29
contact angles, 12–06, 13, 18
in cationic flotation, 12–17, 18
quantity, 12–18, 101
use with soaps, 12–13, 18
utility, 12–18
Oils, reconstructed, 12–18
collection with, 12–06
Old Dominion Copper Co., classifying, 8–39
flotation, 12–57, 59
grinding, 5–42, 43
power, 20–53
sampling, 19–55, 68, 71
storage, 20–11
tailing disposal, 20–36
Oleic acid, 12–12
Oliver-Borden thickener, 15–25
Oliver filter, 16–04 to 08
cost and weight 20–86
re-covering, 16–08, 17
Oliver Iron Mining Co., 2–137; 7–30; 10–07
Omega Gold Mines, 4–49; 12–66; 20–38
Ontario Refining Co., 2–220, 222
Onverwacht Platinum, Ltd., 2–219
Opal, 3–37
Ophir Hills, 15–08
Ophir mill (International Sm. & Ref. Co.), 2–194; 12–104
Ore, 1–01; *see also* specific metals and minerals
dressing, 1–01
ratio of concentration, 2–15
richness, 2–15
treatment schemes, 2–14
value of, 2–263
Organic colloids, 12–33
depression by, 12–24, 33, 85
Orifice discharge, 20–18
Orpiment, oiling of, 12–06
Oruro, Cia. Minera de, 2–235; 8–50; 19–55
Osmiridium, 2–217
Osmium, 2–217
Ounce, 22–64
Ouro Preto mill, 11–134
Outokumpu Oy, 2–61; 4–15, 48; 12–89
Overgrinding, 5–109
Overland mill, 2–127
Owen & Dalton flotation machine, 12–63
Oxalic acid, 15–08
Ox-blood, 15–08
Oxidation, aerators, 12–33
in amalgamation, 14–19
in flotation, 12–33

Pachuca tank, 12–20
Pacific Coast Aggregates, 18–27
Pacific dredge, 2–93
Packing, animal, 20–10
Page mill, *see* ***Federal Mining & Smelting Co.***
Painting, 20–47
Palladium, 2–217
Palmetto Quarries Co., 18–25, 43, 46
Pamour Porcupine, 4–16, 50; 5–57; 7–51; 8–09; 15–16
Pan amalgamators, *see* ***Amalgamation***
Pan-American flotation machines, 12–68
Pan-American jigs, placer jig (*see*)
pulsator jig, 11–26, 30
Pan conveyor, 18–47
cost, 20–84
efficiency, 20–49
feeders, 18–99
installation, 20–50
utility, 20–50
weight, 20–84
Pan, gold, 11–56
bed in, 11–04, 55
dry, 11–140
in sluice clean-up, 11–96
manipulation, 19–169
mechanical, 11–57
testing with, 19–169
Pan filter, cost and weight, 20–86
Pan, grinding, 5–132; 14–21
dry pan, 6–06
Lewiston, 3–85
Pan, hoeing, 2–209
Panob Gold Dredging Co., 2–97
Paper-thimble dust sampler, 19–57, 58
Pappus, theorems of, 21–28
Parabola, construction, 21–36
equations, 21–35
radius, 21–47
segment, 21–25
Paraboloid, 21–28, 53
Parallelogram, 21–24
Parametric equations, 21–34, 40
Par-interstitial particles, 11–05
Parral, *see* ***American Smelting and Refining Co.***
Partial pressure, 17–01
Particle size, 19–139 to 144
eighty per cent., 4–10
run-of-mine, 4–10
shape measures, 19–106, 140, 141
Passagem Mine, 11–134
Patiño M. & E. Consolidated, 2–228
Paymaster Consolidated mill, 7–51, 56; 11–27; 15–16; 16–08, 13
Peat, 1–02
Pebble mills, barrel, 5–11
charging, 5–129
dry, 6–24, 26 to 43, 47
liners, 5–17
operation, 5–97
pebbles, 2–102, 104, 106; 5–36, 39; 6–12
performance, 6–26 to 43
speed, 5–09
vs. ball mills, 5–32
Peck, 22–63
Peck carrier, applicability, 20–52
Pecos, *see* ***American Metal Co.***
Pegnitz mill, 2–146
Pellett classifier, 8–53; 11–67
Penarroya, Sociedad de, 11–41
Pend Oreille Mining & Milling Co., 2–176; 20–03
building, 20–48, 94
cost of mill, 20–78
flotation, 12–106
power, 20–53
recovery, 2–154
Pendulum crusher, 19–96
Penetration, frictional resistance to, 11–03
of jig bed, 11–06
of solid-fluid mixtures, 11–03, 55
Pennsylvania-Dixie Cement Co., 3A–22
Pennyweight, 22–64
Peñoles, Cia. Minera de, 2–174
classification, 8–08, 25
flotation, 12–106

Peñoles, Cia. Minera de, thickening, 15–16
power, 20–53
recovery, 2–154
Pentasol, 12–08
Percolation, timing, 19–53
Performance, *see* under specific apparatus
Periclase, 3–61, 87
Periodic pincer, 19–52
Perkins and Sayre, patent, 12–03
Permanente Corp., 3A–37; 5–85, 104; 18–25, 47
Petroleum, production, 1–02
***p*H,** 12–29; *see also Acid; Alkali*
critical, 12–30, 112
flotation, 12–25, 29, 87
optimum, 12–31
Phase, current, 20–56
Phelps Dodge Corp., Morenci plant, 2–50
bins, 18–17
dewatering, 15–04
dust collection, 2–55; 20–75
grinding, 5–27, 42, 85, 103. 108, 112, 116, 118
hand sorting, 14–05, 06
launders, 18–76; 20–50
ore, 2–29
power, 20–53, 65
sampling, 19–71
screening, 7–18, 23, 29, 53
tabling, 11–71, 73, 82
tailing disposal, 20–38
vanners, 11–92, 93
Phenol, 15–08
Philipsburg Mining Co., 2–200
Phosphate, 3–70 to 76; *see also Apatite*
activation, 12–27
drying, 17–12
electrostatic separation, 3–70;–13–47
flotation, 12–13, 15, 22, 67, 124
grinding, 6–05, 07, 08, 26, 39, 40, 46, 49
hand-rack, 3–71
hand sorting, 14–03
ion, 12–34
production, 1–02; 3–70
scrubbing, 10–02, 03, 08
table flotation, 11–78
washing, 10–09, 10
Phosphate Recovery Co., 12–62
Phosphonium collectors, 12–15
Photography, 19–85 to 94
Photomicrography, 19–88
Pi (π), value, 22–41
Picking, hand, *see Hand sorting*
mechanical, 14–09
Pickle Crow mill, 11–134; 20–48, 53
Piezoelectric crystals, 3–84
Pig, 1–01
Pigments, 3–66
grinding, 6–01, 05, 13, 40
Pile driver, 4–92
Pilgrim Mine, 12–66; 14–19, 23
Pillow blocks, use, 20–54
Pin draw, 11–15
Pine oil, 12–44
in cationic flotation, 12–18
utility, 12–46
Pint, 22–63
Pioneer mill, 4–48; 13–35
Pipe, branching, 20–27
capacity measure, 22–63
compound, 20–23, 27
design, 20–29
flow in, 20–22, 25, 30
diagrams, 20–25
friction factors, 20–24
kinds, 20–29
Pipe, laying, 20–15
looped, 20–27
power delivered, 20–28
pressure in, 20–17
pressure loss, 20–22
short, flow in, 20–23
slip-joint, 20–15
tables, 20–29
wood-stave, 20–31
Piping, designing, 20–78
Pitch, mineral, grinding, 6–40, 46
Pitchblende ore, jigging, 11–43
Pittsburg Coal Co., 15–06; 16–22
Pittsburg Dolores Mine, 15–16
Placer Development Co., 2–93
Planilla, 11–132
Plastic resistance, 11–03
Plasticity, mixture, 11–03
Plate-and-frame filter, cost and weight, 20–86
Platinum, 2–218
blanket tables for, 11–133, 135
production, 1–02
Plat-O table, 11–81 to 84
Plunger jigs, 11–09
plungers, 11–51
Pneumatic concentrators, 11–136 to 139
Pneumatic conveying, 9–29
design calculations, 9–25, 29
ducts, 9–22
energy loss, 9–03
gas velocities, 9–03, 21, 25; 20–74
pressure drops, 9–23 to 25
Pneumatic flotation machines, 12–55 to 61; *see also* specific machines
air consumption, 12–56, 57, 59, 60
air-lift machine, 12–58 to 61, 79
air-swept volume, 12–79
attendance, 12–59
blankets, 12–56, 57
concentrate *vs.* length, 12–56
deep cell, 12–60
Inspiration cell, 12–55, 61
laboratory, 19–175
launder-type, 12–54
matless cells, 12–58 to 61
mat-type, 12–56 to 58
porous media, 12–56
power consumption, 12–56, 57, 59, 60, 61
pressure drop, 12–56, 57, 60
recovery *vs.* length, 12–56
size of feed, 12–59
time-factor, 12–59
vs. subaeration machine, 12–72
without pulp body, 12–54
Poidometer, 18–105
Point Milling & Manufacturing Co., 3–07
Polyclone, 3A–39
Polygon, 21–21
area, 21–33
construction, 21–23
regular, 21–25
Polysius dryer, 3A–21
Porcupine United Mines, 14–13, 17, 20
Port Henry Iron Ore Co., 14–03
Portland, filter, 16–09
Portland Gold Mining Co., 5–113, 118; 15–23; 19–52
Potash, 3–77
production, 1–02; 3–77
Potash Co. of America, 3–78
classifying, 8–16
crushing, 4–62
filtration, 16–07
screening, 7–42, 47, 51

Potassium, permanganate, 15–08
sulphate, flotation, 12–125
Potgietersrust mill, 11–135
Potosí, Cia. del Cerro de, 2–232
classifying, 11–78
jigging, 11–13, 24
launders, 18–69
tabling, 11–77, 84
Potter-Delprat flotation process, 12–73
Pound, 22–64
Power, consumption in milling, 20–53; *see also* descriptions of mills in Secs. 2, 3, and 3A
cost, 20–63 to 66
Diesel, 20–64
electrical, 20–55 to 63
equivalents, 22–62
factor, 20–56
fuels, 20–64 to 66
generation, 20–63
hydroelectric, 20–63
steam, 20–63
Powers, fractional, tables, 22–14
Pozzolana, 3A–02
Precision, 21–17, 18
Preliminator, 6–16
Premier Gold Mining Co., 2–113; 4–15; 12–62, 106
Present value, table, 22–55
Presidio Mine, 4–31; 5–22; 7–42; 15–23
Pressure, center of, 20–17
equivalents, table, 22–59
flow under, 20–19
Preston East Dome, 8–16; 14–06, 07, 20
Prices, 2–11
equipment, 1938 *vs.* 1924, 20–94; *see also* specific metals and minerals
Pride of the West mill, 2–117; 12–104
Primos Chemical Co., 12–95
Prism, 21–26, 27
Prismatoid, 21–28
Probability, 21–15
Probable error, 21–17
Producer-gas, for power, 20–66
Production, 2–11; *see also* specific metals and minerals
cost, 2–02
metals, 2–12, 13
Products, kinds, terminology, 7–01
Promotor, 12–03; *see also* ***Collection, flotation***
Properties, density (*see*); *see also* specific substances
mixtures, 11–03
plasticity (*see*)
Psilomelane, magnetic separation, 13–25
Pug mill, 10–05
Pulleys, cost and weight, 20–89
line-shaft, 20–54
Pulp, density, 19–206
flow, 19–52
Pulsator jigs, 2–90; 11–29
Pulverator, *see* ***Hammer mill***
Pumice, 3–80
Pumicite, 3–80
Pumping, 20–27
concentrate, 20–52
cost, 2–104; 20–15, 37, 40, 52
power consumption, 2–174
Pumps, *see also* specific types
centrifugal, 18–79; *see also* ***Centrifugal sand pump***
cost, 20–89
diaphragm, 18–89
dredge, 20–52
dry, 18–54
Frenier, 18–88
Fuller Kinyon, 18–54
Pumps, pipe lines, 20–27, 40
spiral, 18–88
vacuum, 16–05
weight, 20–89
Wilfley, *see* ***Centrifugal sand pump***
Pyramid, 21–27
setting, crushers, 9–27
jigs, 11–19
Pyridinium compounds, 12–15, 43
Pyrite, 3–120
activation, 12–26, 34, 35
depression, 12–24, 26 to 32, 34, 36, 37, 112
flotation, 12–08, 09, 13, 25, 26, 29, 31, 32, 88, 109
grinding, 6–40, 49
magnetic separation, 13–33
production, 1–02
Pyrogallol, 12–34
Pyrolusite, flotation, 12–25; *see also* ***Manganese ore***
magnetic separation, 13–25
Pyrophyllite, 3–82
Pyrophyllite Talc Products, 3–82
Pyrrhotite, depression, 12–26, 27, 30
flotation, 2–67; 12–08, 09, 26, 29, 109
magnetic separation, 13–25, 33

Quadrants, 21–29
Quadrilateral, 21–25
Quart, 22–63
Quartering shovel, 19–30
Quartz, 3–82, 87
activation, 12–19, 23, 26, 29, 31
crushing, 6–06
depression, 12–25, 27, 29, 32, 35
flotation, 12–14, 16, 17, 22, 26, 127
grinding, 6–24 to 26, 49
oiling, 12–26
production, 1–02
settling velocity, in air, 9–02
in water, 8–04
Quebracho, 12–33
Questa Mine, 12–72
Quicksand, 11–02, 04, 105
pneumatic, 11–139
Quincy mill, 4–08, 88; 5–112; 7–21; 11–19; 18–22

Raconite, 2–49
Radford Limestone Co., 3–117
Radians, equivalents, 22–41
to degrees, tables, 22–33
Radiation, heat loss, 17–15
Radiators, 20–69
Radium, 2–219
Rainbow mill, 4–89, 90; 5–23
Rainfall, 20–12
Rake classifier, 8–06
dewatering, 15–04
manufacturers, 8–07
manufacturers' data, 8–07
performance, 8–08
products, 8–12
rating, 8–07
Rand, amalgamation, 14–17, 20
blanket tables, 11–133
grinding, 5–13, 32, 38, 94, 95, 97
hand sorting, 14–05, 06
tube milling, 5–23
Rates, 21–46
Ratio of concentration, 19–190
at various mills, 20–02; *see also* mill descriptions in Secs. 2, 3
effect on flowsheet, 2–15
formulas, 19–191 to 195

Raub Australian mill, 12–34
Ray (Nevada Consolidated Copper Co.), 2–43; 20–01, 02
  chutes, 18–67
  classifying, 8–32
  conveying, 18–32, 39
  crushing, 2–29; 4–28, 66, 74
  elevators, 18–57
  feeders, 18–99
  filtration, 16–07
  flotation, 12–09, 57, 104
  grinding, 5–25, 43, 50, 51, 56, 118
  haulage, 20–04
  launders, 18–69
  power, 20–53
  pumping, 18–82
  screening, 7–26, 38, 42
  smelter, 1–03
  storage, 20–11
  tabling, 11–69, 79, 82
  thickening, 15–16, 17
  water, 20–15
Raymond, air classifier, 9–34
  bowl mill, 6–08, 31, 32
  classifier, 6–51
  high-side mill, 6–08, 31, 35, 47
  Imp mill, 6–04, 31, 40, 43
  low-side mill, 6–08, 35
  performance, 6–27, 31, 37, 39, 40, 42
  roller mill, 6–08
  Whizzer, 9–34
Reagent feeders, cost and weight, 20–86
Real del Monte, 15–16
Realgar, flotation, 12–111
Reciprocals, table, 22–16
Recovery, 19–190
  at mills, *see* descriptions of mills in Secs. 2, 3
  commercial, 19–196
  factors controlling, 1–04
  formulas, 19–191 to 195
  mill, 2–127
Rectangle, 21–24
Red Arrow mill, 14–20
Reduction-gyratory crusher, 4–40 to 44
Reduction ratios, 4–09
Reduction ton, 4–12
Reef picking, 14–09
Reflectors, 20–68
Refractories, 3–87 to 90
Repairs, designing for, 20–44, 76
Replogle Steel Co., 13–17, 22, 35
Repose, angle of, bin fillings, 18–05
  wet sand, 20–37
Republic Steel Co., 2–143; 5–51, 116; 13–32
Resistance, plastic, 11–03
Resolving power, 19–74
Resurfacing, *see Activation*
Retaining walls, batter, 20–44
  mill, 20–41
Retort furnace, cost and weight, 20–90
Retsof mill, 3–92; 4–60
Renong Tin Dredging Co., 2–226
Reverse classification, definition, 11–03, 55, 60, 135
Reverse-current classifier, *see Hardinge classifiers*
Revolving stone screens, 7–31 to 34
  cost and weight, 20–91
  washing, 10–08
Reynolds number, 8–02
Rhodes, James H. Co., 3–81
Rhodesia Broken Hill Development Co., 2–253
Rhodochrosite, flotation, 12–25, 121
Rhombus, 21–24
Richard mine, 13–17, 20
Richards, classifier, 8–44, 48
  -Janney classifier, 8–48
  jig, 3–32; 11–29
Rico Argentine mill, 12–106
Riffles, 11–95; *see also Shaking table; Sluice*
  for sampling, 19–33 to 35
  wave, 11–74, 76
Ring crusher, 4–87
Ring-roll mill, 6–06
Rio Tinto, 5–68; 12–105, 115, 118; 14–24
Rittinger, shaking table, 11–59
  spitzkasten, 8–42
Rivermines mill (St. Joseph Lead Co.), 12–26
Roan Antelope mill, 5–106, 118, 125; 15–17; 18–32, 36, 83, 101
Roaster, cost and weight, 20–90
Roasting, 14–24
  cost, 2–140
  to produce magnetism, 13–25 to 27, 33
Rock, physical properties, 3–105; 4–12; 5–109 to 118
Rocker, 11–57 to 59
  bed, 11–04
  dry, 11–137
Rod mill, 5–40 to 53; *see also Tumbling mills*
  barrel, 5–11
  capacity, 5–41, 48, 98, 99; 6–14
  charge, 5–31, 32, 41
  charging rods, 5–129
  circulating load, 5–47, 98, 99
  cost, 5–50; 20–90
  differential grinding, 5–49, 97
  dry, 5–47; 6–13, 32, 34
  efficiency, 5–50, 125
  feed size, 5–47, 98, 99
  hexagonal rods, 5–26
  liners, 5–17
  lost time, 5–50
  manufacturers' data, 5–41, 47
  open-end mill, 5–40
  operation, 5–97
  overflow type, 5–40
  performance, 5–42, 46
  power, 5–41, 49
  product, 5–44, 47, 108
  pulp density, 5–50, 123
  reduction ratio, 5–48
  rod paths, 5–03
  rods, 2–192; 3–111; 5–32, 35, 39
  seasoned load, 5–31
  size, 5–41
  speed, 5–08, 09, 41, 50
  time-factor, 5–98 to 100
  use, 5–51
  vs. ball mill, 5–51, 52
  weight, 5–41; 20–90
  with screens, 5–51
Roller function, 19–146
Roller mill, 6–06 to 10
  performance, 3A–30
Rolls, 4–55 to 77
  adjustment, 4–59
  angle of nip, 4–68
  applicability, 4–76
  capacity, 4–72
  choice of, 4–76
  closed-circuit, 4–74
  construction, 4–57
  Cornish, 4–72
  corrugated, 4–74
  cost of crushing, 4–76
  dry grinding in, 6–06, 33
  efficiency, 4–73

Rolls, feed, 4–70, 73
fleeting, 4–59
for clay, 10–16
graded crushing, 4–74
hand of, 4–57
lubrication, 4–59
manufacturers, 4–59
manufacturers' data, 4–56
nip, 4–68
operation, 4–76
performance, 2–48; 4–60
power, 4–73
price, 20–90
product, 4–70, 74, 75
reduction ratio, 4–69
ribbon factor, 4–72
selection, 4–76
shells, 4–58
speed, 4–72
spring pressures, 4–57
three-roll machine, 10–16
weight, 4–56; 20–90
Roofs, 20–46, 69
Rose Deep, 5–94
Rosebery concentrator, 19–52
Rosin-Rammler function, 19–145
Rosoff Sand & Gravel Corp., 3–95
Ross chain feeder, 18–22
Ro-tap testing-sieve shaker, 19–108
Roto-clone, 9–13
Rotoscoop, 15–02
Round tables, 11–127 to 129
Round Valley Tungsten Co., 2–245
Rowand screen, 7–27
Rowena mill, 12–104
Rubber glass, 20–46
Rubidium, 2–220
Ruby, 3–37
Ruby mill, *see* ***Eagle Picher M. & S. Co.,*** Ruby mill
Running time, *see* specific mills, Sec. 2
Run-of-mine, size distribution, 4–10
Ruoss jig, 11–29
Rust, in pipes, 20–22
Ruth subaeration machine, 12–72
Rutile, 3–87
flotation, 12–120
grinding, 5–64; 6–41, 46
pneumatic concentration, 11–139

S. & M. Syndicate, 13–25
Sacks, *see* ***Bags***
Sakiet-Sidi-Youssef, 13–26
Salines, 3–90
Salt, 3–91
flotation, 12–124
grindability, 6–26, 46
grinding, 6–03
in mill water, 12–85
production, 1–02; 3–91
well mining, 3–92
Salt cake, *see also* ***Sodium hydrogen sulphate***
grinding, 6–05
Saltation, 11–96
Sample grinders, 19–69
Samplers, *see also* specific machines
arc-path, 19–39 to 45
auger, 19–31
calibration of, 19–50
chain-bucket type, 19–45
checks on, 19–50
concentrate, 19–35
construction, general principles, 19–39
cost and weight, 20–91
Samplers, cutters, 19–32, 39
drive, 19–39
gun, 19–30
hand stream cutters, 19–31
laboratory, 19–163
machine, 19–32 to 53
moving, 19–37 to 53
stationary, 19–32 to 37
manufacturers, 19–47
pipe, 19–30
riffle, 19–33 to 35
rotary, 19–41, 42
shovels, 19–30
straight-path type, 19–45 to 47
tilting-box, 19–44, 47
umpire, 19–41
whistle-pipe, 19–33
Sampling, 19–01 to 71
allowable error, 19–19
assaying, 19–17
Bayles' theorem, 19–13
boats, 19–24, 25
bottle, 19–36
buyers' problem, 19–13
calculations, 19–08 to 17
cars, 19–24, 25
central timing systems, 19–48
coal, 19–21, 29
composition, 19–04
concentrate, 19–54, 55
concrete aggregate, 19–26
coning-and-quartering, 19–27
copper ores, 19–20
cost, 2–103, 263; 19–29, 30, 71
crushing samples, 19–69
custom mills, 2–131; 19–63 to 68
cuts, 19–40
degree of assurance, 19–07, 16
dewatering samples, 19–69
dry *vs.* wet, 19–38
drying samples, 19–69
duplicate samples, 19–17
dust, 19–56 to 62
flotation concentrate, 19–29
for screen tests, 19–21
gold ores, 19–19, 21, 25
grab, 19–24
hand, 19–24 to 29
equipment, 19–185
head, 19–54, 55
increment sampling, 19–07 to 13
iron ores, 19–25
lead ores, 19–20
liquids, 19–36
marking samples, 19–68
metallics, 2–263
mills, 2–131; 19–53, 55, 63 to 68
portable, 19–68
mixing, 19–70
moisture, 2–262; 19–50, 53, 66
particle size, 19–05, 06, 22
pipe, 19–30
preparation for assay, 19–68 to 71
principles, 19–01
probability, 19–03, 04
recorders, 19–50
requirements for accuracy, 19–38
resampling, 19–15
results, 19–18
segregation, 19–07, 24
shovel sampling, 19–28
silver ores, 19–20, 21, 29
size of sample, 19–02, 04, 13, 20
stack gases, 19–62

Sampling, tailing, 19–54, 55
theory, 19–02 to 19
timing, 19–47 to 50, 53
tonnage, 19–50
trench, 19–30
truck sampling, 19–26
umpire, 2–263
variability, 19–06
weight of sample, 19–20 to 24
wet, 19–31 to 56
zinc ores, 19–20
San Francisco del Oro, 11–83
San Francisco Mines of Mexico, 2–191
classification, 8–08
conveying, 18–32, 39, 47
crushing, 4–48, 49
filtration, 16–12
flotation, 12–35, 106
launders, 18–69
pumping, 18–82, 86
recovery, 2–154
screening, 7–36
thickening, 15–16
San Roberta Mine, 11–132
Sand:
and gravel, 3–92 to 102
blending, 3–94; 19–200
concrete, limestone, 3–47
production, 1–02
specifications, 3–26, 95
tabling for shape, 11–78
washing, 10–08
cone, 8–36 to 41
fineness modulus, 3–58
formulas for separating and blending, 19–200
glass, 3–84
acid wash, 11–78
flotation, 12–16
production, 1–02
scuffing, 10–08
tabling, 11–78
molding, 1–02
scrubbing, 10–08
special, 3–82
tanks, 8–35
washing in, 10–10
washing, 3–94
wheel, 15–03
for ball-mill circuits, 2–32; 3A–40; 20–50
for tailing, 20–39
Santa Barbara mill, 11–44; 15–02; 20–16, 44
Santa Cruz Portland Cement Co., 6–44, 47
Sapamine, 12–17
Saponin, 12–33; 15–08
effect on bubble attachment, 12–38
Sapphire, 3–37
Save-all, 2–90
Scales, automatic dump, 19–50
cost and weight, 20–91
laboratory, 19–163
mathematical, 21–58
platform, 19–50
track, 19–50
Scheelite, flotation, 12–23, 25, 31, 34, 35, 121
Scheichel jig, 11–33
Schickel pot, 11–33
Schneible tower, 9–16
Scleroscope grindability, 5–118
Scobey timer, 19–47
Scour, leaping, 11–03, 126
rolling, 11–03
Screen, Aero-vibe, 7–56
analysis, 19–100 to 109
apertures, determination of, 19–142
Screen, arrangement, 3–114
bar, 7–19
blinding, 7–13, 19, 46, 48, 61
Callow traveling-belt, 7–70
capacity, 7–02, 05, 17, 26, 27, 38, 39; *see also* specific types of screens
Centrifugal B (A–C), 7–52
choice of covering, 7–13, 17
circuit guard in grinding, 5–103
Cole, 7–36
Colorado impact, 7–38
Conveyanscreen, 7–46
cost and weight, 20–91
critical size, 7–63
decks, 7–61
Denver-Dillon, 7–56
Denver Simplicity, 7–54
dewatering, 15–02
drag screen, 7–27
dredge, 2–87, 224
dry *vs.* classifier, 6–51
effect of moisture, 7–63
effect of tilt, 7–18
efficiency, 7–04, 16, 17; 19–200
Eliptex, 7–59
equivalent, 7–18
fixed, 7–21, 26
for washing, 10–10
Flatlock, 7–11
flowsheets, 2–16
Gilbert, 7–30
Good Roads, 7–54
grizzly, *see* ***Grizzly***
Gyrex, 7–50
Heller, 7–20
Hum-mer, 7–42
Huron Heaviduty, 7–53
Jeffrey-Traylor FB, 7–46
Kam-tap, 7–40
Korb-Pettit, 7–59
laboratory, 19–163
Lead-belt, 7–40
Leahy No-blind, 7–39
length, 7–06
life, 7–26, 27, 30, 31, 34, 48, 56, 57, 60, 61, 63
limiting, definition, 7–01
Link-belt PD, 7–53
Link-belt UP, 7–56
lip, 7–16
location in mill, 20–47
Locker's Supreme, 7–48
Low-head, 7–58
materials, 7–06, 46
Mitchell, 2–48; 7–57
Multideck, distribution of load, 7–54
Multirap, 7–40
Niagara, 7–50
No-blind, 7–39
percentage of opening, capacity effect, 7–68
punched plate, 7–16, 17
woven, 7–06, 17
piano-wire, 7–20
Plat-O, 7–55
product, size, 7–18
effect of moisture, 7–19
protection, 3–101; 7–18, 31
punched plate, 7–14
tension, 7–17
vs. woven, 7–16, 17, 39
rectangular-mesh, 7–12, 13
proportions, 7–18
setting, 7–19
retaining, definition, 7–01
revolving, 7–27

Screen, Rod-deck, 2–57, 211; 7–19, 57
Rotex, 6–39
Roto-vibratory, 7–53
round, 7–16, 18
vs. square, 7–18
Selectro, 7–54
shaking, *see* ***Shaking screen***
shape, 7–06, 12, 13, 16, 68
Shenven, 7–48
Simplicity, 7–54
slope, 7–26
slotted, 7–16
spiral, 7–28
sprays, 10–09
square, 7–18
St. Joe, 7–40
stationary, washing, 10–10
step, 2–89
stone, *see* ***Revolving stone screen***
Superlog, 7–59
Supreme, 7–48
surfaces, tables, 3–05; 6–27; 11–139
tables, 7–08, 10, 11, 14, 15, 16
Telsmith Pulsator, 7–52
testing, 19–101, 102
Ton-Cap, 7–12
traveling-belt, 7–70
Tri-vibe, 7–39
trommel, *see* ***Trommel***
trunnion, 5–100, 104; 6–27, 35, 39, 43, 44
Tyler 400, 7–46
Tyloy, 7–59
types, 7–21
Ty-rock, 7–53
Ty-Rod, 7–13
Universal, 7–54
Utah, 7–48
vibrating, *see* ***Vibrating screens***
Vibrator screen (S–A), 7–49
Vibrex, 7–57
washing, 2–89; 10–08
weaving, 7–10
Wedge-wire, 7–20
wire, 7–06
vs. plate, 7–17
Screening, cost, 7–57
difficult grains, 7–04, 05, 64
moisture effect, 7–05, 19, 21, 22, 26, 27, 48, 53, 56
overloading, 7–05
principles, 7–01
rate, 7–02
scalping, 7–69
shape of particles, 7–05
size of product, 7–18
stratification in, 7–04
surfaces, *see* ***Screen***
water consumption, 7–29, 30, 71, 72
Screw washer, cost and weight, 10–07; 20–93
Scrub Oaks mill, 13–20, 31
Scrubber, 10–02 to 08
blade mill (*see*)
counterflow, 3–96; 10–04
drum, 10–03
dry, 7–28; 10–16
flume, 10–12
log washer (*see*)
paddle mill, 10–03
pug mill, 10–05
screen, 10–04
screw washer, 10–07
tumbling mill, 3–85, 101, 102
Turbo washer, 10–06
vibrating-screen, 10–10
Scrubbing, 10–01 to 16; *see also* ***Scrubber; Washer; Washing***
dredge, 2–89
dry, 7–28; 10–16
jet, 10–02
methods, 10–02
monitors, 10–02
phosphate rock, 3–73
sand, 3–86; 10–08
stirring, 10–04
tumbling, 2–195, 209; 10–03
Scruple, 22–65
Scuffing, 10–08
Seaboard Operating Co., 3–121
Seaboard Sand & Gravel Corp., 7–32
Seepage, in ditches, 20–34
Selectivity index, 19–195
Selenium, 2–220
Selling, metals, 2–255 to 267
price, 2–02; *see also* specific metals and minerals, Secs. 2, 3
smelter charges, 2–11, 15, 225 to 264
Separating media, classification of, 11–02
Separation, 1–01
methods, 1–03
Sericite, depression, 12–34
flotation, 12–16
Series, 21–47 to 49
trigonometric, 21–31
Settling ratio, 19–166
Settling velocity, in classifiers, 8–02 to 05; 9–01 to 03; 11–03; 19–09
in jig bed, 11–06
Severance, 1–01, 03
Shafting:
collars, cost and weight, 20–83
cost and weight, 20–92
designing, 20–78
strength, 20–54
Shaking-screen table, 3–05
Shaking screens, 7–34
applicability, 2–138; 7–35
for washing, 10–09
Shaking tables, 11–59 to 89; *see also* specific tables
abandonment, 11–87
action on, 11–59, 72
attendance, 11–65, 68, 71, 73, 77, 79, 83, 87, 89
Buss table, 11–70, 84
Butchart, *see* ***Butchart table***
capacity, 11–87; *see also* specific tables
Card table, 11–74
classification of, 11–61
Concenco table, *see* ***Deister-Overstrom table***
concrete decks, 11–73
cost and weight, 11–90
covering, *see* specific tables
Deister-Overstrom table (*see*)
desliming on, 11–64
distribution of values, 11–86
feed, 11–84, 86
feed rate *vs.* performance, 11–80, 82
feed size, 11–60, 84, 86 to 88; *see also* specific tables
Ferraris table, 11–70
finishing, 11–61, 67, 87
for table flotation, 12–83
Garfield, *see* ***Garfield table***
Gilpin County, 11–59
Halley, 11–59
Hercules, 11–86
lost time, 11–87, 89; *see also* specific tables
National table, *see* ***Butchart table***
operation (*see* specific tables)

Shaking tables, Overstrom table, 11–70
performance, 11–88; *see also* specific tables
phosphate, 3–74
power, 11–87, 89; *see also* specific tables
principles, 11–59
product, sizing-assay, 11–67 to 69, 73, 77, 80
riffles, 11–60, 72, 88, 89; *see also* specific tables
Rittinger, 11–59
roughing, 11–61, 67, 87
rubber covering, early, 11–73
Salzburg, 11–59
sand, 11–61
Schemnitz, 11–59
slime, 11–62
slope, 11–88
spacing, 11–71
speed, 11–87, 88; *see also* specific tables
stroke, 11–87, 88; *see also* specific tables
suction, 3–05
suspended mounting, 11–81
utility, 11–84
vs. flotation, 11–87
water, 11–87, 88; *see also* specific tables
Wilfley, *see Wilfley table*
Shanks process, 3–68
Shannon Copper Co., 8–38, 39
Shape, factor, 4–09
particle, 4–36
tabling for, 11–78
Shasta Butte dredge, 2–93
Shasta Dam, 3–100; 7–53
Shattuck-Arizona Copper Co., 4–31; 8–20, 39; 11–71; 16–18; 18–69
Sheep Ranch mill (St. Joseph Lead Co.), 11–24
Shell, washing, 3–49; 10–08
Shenandoah Dives Mining Co., 2–188
crushing, 4–49
filtration, 16–10
flotation, 12–95, 106, 118
grinding, 5–91
tabling, 11–69
thickening, 15–16
Sheridan and Griswold, patent, 12–03
Sherritt-Gordon Mines, conveying, 18–32, 36, 39
crushing, 4–16, 51, 66
distributor, 18–10
feeder, 18–101
filtration, 16–12
flotation, 12–102, 115
grinding, 5–67, 112
screening, 7–42
Shickel pot, *see Scheichel jig*
Shields and Thielman jig, 11–19
Shimmin flotation machine, 12–60
Shops, 20–75
Short circuits, 20–59
Shovel, sampling, 19–30
Shovel wheel, 15–02
Shoveling-in, 2–76
Showa Steel Co., 13–28
Showering, 12–44
Shriver, filter, 16–19
filter thickener, 15–25
Shuler Coal Co., 14–04
Siderite, flotation, 12–121
magnetic separation, 13–26, 33
Sienna, 3–66
Sierra Nevada mill, 2–127
Sieves, A.S.T.M., 19–102
British standard, 19–102
calibration, 19–100
coal, 19–103
ratio, definition, 7–01
round-hole, 19–103
Sieves, scales, 7–01; 19–100 to 103
shakers, 19–108
specifications, 19–100
testing, 19–100 to 104
tolerances, 19–101, 102
Tyler, 19–102, 103
Silica brick, 3–89
Silica sand, 3–82
grinding, 6–25, 41, 46
Silicas, soft, 3–02
Silicate, activation, 12–26, 29
depression, 12–25 to 27, 34, 35
dispersion, 12–28; *see also* ***Dispersion***
flotation, 12–14 to 16, 25, 34, 88, 125
ion, 12–35; *see also* ***Sodium silicate***
surface closure by, 12–24
Silicon carbide, grinding, 6–41
Sillimanite, 3–87
flotation, 12–13, 127
Silo, rock, 3–115, 116
Silver, 2–128
complexing, 12–36
concentration, 2–129
cost, 2–130
depression, 12–36
flotation, 2–187; 12–08 to 10, 32, 34, 111, 118, 121
jigging, 11–43
planilla, 11–132
tabling, 11–68
custom milling, charges, 2–255
-cyanide complex, 12–27
production, 1–02; 2–128
Silver Dyke Mining Co., 2–247; 18–69
Silver King Coalition, building, 20–44
crushing, 4–49, 60
jigging, 11–09
location of mill, 20–03
ore, 20–03
power, 20–53
sampling, 19–55
storage, 20–11
water, 20–13
Simmer & Jack mill, 5–24; 8–37; 13–36; 16–18
Simplex sampler, 19–41
Sines, tables, logarithmic, 22–46
natural, 22–34
Single-roll crusher, 4–36 to 38
performance, 3A–32, 34; 4–38
price and weight, 20–92
Sink-float analysis, 11–124
Sink-float separation, 11–104 to 125
agitation, 11–115
air consumption, 11–115
apparatus, 11–114
applicability, 11–123
attendance, 11–119
Battelle concentrator, 11–106
capacity, 11–115
Chance cone, 11–106
chlorethane process, 11–125
classification of processes, 11–105
cleaning medium, 11–116
cones, 11–114, 118
control, 11–117
cost, 2–167; 11–118, 119, 124
crowding, 11–113
diamond pan (*see*)
differential-density method, 11–113
Du Pont process, 11–125
feed size, 11–115, 117, 118, 123, 124
feeding, 11–114, 117
flowsheets, 2–160, 166, 182; 11–105
heavy liquids, 11–125

Sink-float separation, multiple-product, 11–115
performance, 11–118, 119, 120
plant cost, 11–124
quicksand (*see*)
rafting, 11–113
removal of sink, 11–115
separation, sharpness, 11–123
sizing-assay tests, 2–156
suspensoid, *see* ***Suspensoid processes***
testing, 19–150
trough, 11–115
utility, 11–87
vs. jigging, 11–16, 124
water, 11–119
Wuensch apparatus, 2–182; 11–115, 116
Sinking fund, tables, 22–58
Siscoe mill, 5–81, 83, 109, 118; 20–08
Size, crushed products, *see* specific machines
particle; *see* ***Particle size***
run-of-mine, 4–10
Sizing, adsorption, 19–130
centrifuge, 19–125
classifier, 10–13
close, 7–01
coercimetry, 19–135
correction of screens, 19–107
critical size, 7–04
definition, 7–01
dissolution method, 19–129
distribution functions, 19–145 to 150
elutriation, 19–109 to 118
frequency curves, 19–150
gas-adsorption, 19–130, 132
hydrometer, 19–128
liquid-adsorption, 19–131, 132
microscopic, 19–118, 128, 132, 135
particle size, 19–139 to 144
permeability method, 19–133
pipette, 19–122
radioactive-tracer method, 19–131
screen analysis, 19–104 to 109
mechanical, 19–108
standard method, 19–105
sedimentation, 19–120 to 126
balance, 19–194
shape sizing, 19–106, 140, 162
surface measurement, 19–126 to 139
surface-reaction method, 19–129 to 133
tests, 19–99 to 150
equipment, 19–185
presentation, 19–145 to 150
turbidimetry, 19–126 to 129
Tyndallometry, 19–129
Skip-hoist, Alaska-Gastineau, 20–52
Skylights, 20–46
Sladen Malartic mill, 16–17
Slag, 1–01
grinding, 6–41, 42, 49
Slate, 3–102
production, 1–02
Sledging, 4–92
Slide rule, 21–04 to 06
Sliding angles, 7–22
Slime, 11–60; 12–21
attrition mixing, 12–22
Brownian movement, 12–21; 15–04
coating, 12–21, 29, 34, 128
colloidal, 12–21
composition, 12–127
definition, 15–04
depression, 12–32, 128
desliming, 8–42; 12–22; *see also* ***Mechanical classifiers; Thickeners***
dispersion, 12–22, 128
Slime, flotation, 12–128
separate treatment, 12–22, 96, 107
settlement, *see* ***Thickening***
tanks, 8–42
Slope, 22–65
Sloughing-off box, 8–36; 10–11
Sluice, 11–95 to 104
action in, 11–96, 102
amalgamation, 11–96, 103; 14–18
Australian, 11–97
bed, 11–04, 95, 96
boxes, 11–97
capacity, 11–103
clean-up, 11–96, 102
concentration criterion, 11–95
costs, 2–77, 80 to 82, 84; 11–104
curves, 11–100
dredge, 2–90, 95
drops, 11–100
flowsheet of, 11–96
labor, 2–77, 80
length, 11–100
mercury in, 11–103
mercury loss, 14–23
operation, 2–77, 79 to 82; 11–102
performance, 2–77, 79 to 82
recovery, 11–103
riffles, 2–77, 80, 82; 11–95, 97
save-all, 2–90
size, 11–95
slope, 2–79; 11–99
tin, 2–225
transport, 11–96
undercurrent, 11–100
water, 11–100, 101
width, 11–100
Smaltite, flotation, 12–109
Smelting, 1–01
analyses, 2–263
charges, 2–11, 15, 255 to 264
contracts, 2–267
estimate sheet, 2–256
losses, 2–261
penalties, 2–259
schedules, 2–257
Smittem, 11–14
Smokes, 9–06
Snow loads, 20–46
Snyder sampler, 19–43
Charles Snyder, 19–41
cost and weight, 20–91
Soaking, 10–03, 16
Soap, 12–12; *see also* ***Fatty acids***
coagulant, 15–08
contact angles, 12–38
depression with, 12–24
earth-metal, 12–29
effect of acid, 12–25
frothing, 12–13, 45
optimum *p*H, 12–25
stage addition, 12–88
utility, 12–12
Soapstone, 3–120
Société Minière Colombie Britannique, 11–101
Soda ash, *see* ***Sodium carbonate***
Sodium: aluminate, coagulant, 20–39
bicarbonate, flotation, 12–125
Captax, 12–11
carbonate, 12–26; 15–08
chloride, 15–08, 09; *see also* ***Halite***
hydrogen (acid) sulphate, coagulant, 20–39
hydroxide, *see* ***Alkali***
silicate, 12–35; 15–06, 08; *see also* ***Silicate ion***
grinding, 6–42

Sodium, sulphate, 3–90
flotation, 12–125
test for soundness, 3–107
sulphide, 12–24, 35; *see also* ***Sulphide ion***
Solenoid, 13–05
Solids, areas, 21–26 to 28
per cent., 19–206
volumes, 21–26 to 28
Solubility, tables, 12–24
Sorting, definition, 8–01
hand, *see* ***Hand sorting***
Sound control, *see* ***Electric Ear***
South African Corundum Co., 3–19
Southern Mineral Products Corp., 3–76
Southern Mining & Milling Co., 3–45
Southern Phosphate Corp., 3–73; 8–50; 12–83; 18–25
Southern Talc Co., 3–122
Southwestern flotation machine, air, 2–49
cost and weight, 20–86
Southwestern-Kraut Hydromotor jig, *see* ***Hydromotor jig***
Spalling, 4–92
Spaulding concentrator, 2–148
Specific gravity, assay, 19–204
metals, 2–17
minerals, 22–67
Specific heats, 2–17; 17–02
surface, 19–136
Specific volume, 19–206
Speed reducers, applicability, 20–55
Sphalerite, *see also* ***Zinc, ore***
activation, 12–08, 19, 22, 26, 27
conditioning time, 12–19
depression, 12–19, 26 to 28, 30 to 32, 34, 36, 112
flotation, 12–08, 13, 16, 25, 32, 88, 111
settling velocity in water, 8–04
Sphere, 21–27
tables, 22–26
Spherical, polygon, 21–27
segment, 21–27
Sphericity, 19–141
Spinel, 3–87
Spiral, Archimedes, 21–26, 42, 47
classifier, 8–14 to 18
dewatering, 15–04
concentrator, Humphreys, 11–135
logarithmic, 21–42, 47
picker, 14–09
Spitzkasten, classifying, 8–42, 46
Spodumene, decrepitation, 14–24
flotation, 10–08; 12–22, 26, 128
grinding, 6–42
Spokane Portland Cement Co., grinding clinker, 6–11
Spray, for dust, 20–74
washing, 10–09
Sprinklers, fire-protection, 20–71, 72
Square, construction, 21–23
mensuration, 21–24
by slide rule, 21–05
Square root, by slide rule, 21–05
tables, 22–06
Squares, method of least, 21–17, 57
tables, 22–02
St. Joe Mining & Milling Co., 2–116
St. Joseph Lead Co., Atlanta mill (*see*)
Balmat mill (*see*)
bin, 18–19
Bonne Terre mill (*see*)
classifier, 2–157; 8–54
classifying, 8–20
Desloge mill (*see*)
distributor, 18–106
St. Joseph Lead Co., Edwards mill (*see*)
elevators, 18–56
Federal mill (*see*)
flotation, 12–60, 99
flotation machine, 2–179; 12–60
Hughesville mill, 2–154; 12–36, 91; 13–35; 19–55
jigging, 11–34 to 37, 74
launders, 18–70
Leadwood mill (*see*)
Mine La Motte (*see*)
screen, 7–40
tabling, 11–64, 71, 72, 74, 87
Stamps, 4–87 to 91
dry grinding, 6–27
performance, 2–100
steam, 2–32; 4–87
Standpipe, 20–18
Stannic bromide, 19–151
Starch, 12–33
caustic, coagulant, 3–79; 12–34; 15–06; 20–39
soluble, 12–24, 34
Staso Milling Co., 4–12
Steam generation, 20–64
electric, 20–71
Steam-power plants, 20–63
Stearic acid, 12–12
Stearyl, glyceryl sulphate, Na salt, 12–43
malic acid, 12–43
Steffensen, flotation cell, 12–60
magnetic separator, 13–29
Stibnite, activation, 12–26
depression, 12–26, 27
flotation, 2–106; 12–32, 112
oiling of, 12–06
Stockpiling, *see* ***Storage, ground***
Stoichiometric balance, 19–190
Stokes' law, 8–02; 9–02
applicability, 11–02, 03
Stone, commercial sizes, 3–82, 107
crushed, 3–105 to 118
dimension, 3–103
dry scrubbing, 10–16
production, 1–02; 3–104, 106
shape, 3–108
unsound, 10–16
Storage, 18–01 to 28; 20–12
bedding, 18–27
bins, *see* ***Bins***
capacity, 2–43; 18–01; 20–11
cement raw material, *see* ***Cement***
ground, 3–50, 113 to 116; 18–23 to 28
methods, 18–02
primary, 4–93
Robins-Messiter system, 18–27
stockpile, 3–50, 113, 115, 116
water, 20–14
wet sand, 2–33
Storey's Creek, 13–26
Strake, 11–130; *see also* ***Blanket table***
mechanical, 11–135
Strap bolt, 11–51
Stream line, mill, 20–49
Stroboscopic illumination, 19–92
Strontianite, flotation, 12–124
Sturtevant, air classifier, 6–28 to 30, 36, 41, 51; 9–34
hammer mill, 6–38
ring-roll mill, 6–07
Whirlwind, 9–34
Suan mill, 4–89, 90
Subaeration flotation machines, 12–63 to 73; *see also* specific machines
air-swept volume, 12–80

Subaeration flotation machines, attendance, 12–65
laboratory, 19–175
power consumption, 12–65, 68, 82
size of feed, 12–66
time-factor, 12–66, 68
Unit cell, 12–66
vs. pneumatic machine, 12–72
Subinterstitial particles, 11–05
Sulman and Picard, patent, 12–03
Sulman, Picard and Ballot, patent, 12–03
Sulphide, depression, 12–26, 34
differential grinding, 14–23
flotation, *see* specific sulphides
ion, 12–35; *see also Sodium sulphide*
organic, 12–11
oxidation of, 12–04
solubility, 12–22
Sulphide Corp., 11–17
Sulphidization, 12–35, 88
Sulphite ion, 12–36; *see also Sulphur dioxide*
Sulphonated oils, 12–02, 13
Sulphonium collectors, 12–15
Sulphoxy collectors, 12–13
Sulphur, 3–118
coating by oil, 12–06
flotation, 12–130
grinding, 6–26, 42, 46, 49
production, 1–02
Sulphur Bank Syndicate, 2–207; 7–29; 14–05; 20–65
Sulphur dioxide, *see also Sulphite ion*
in flotation, 12–27
Sulphuric acid, coagulant, 15–06 to 08; 20–39
conditioning with, 12–24, 25
in flotation, 12–29
Summitville Consolidated Mines, 11–24
Sunnyside Mining & Milling Co., 11–64; 16–15; 20–11
Sunshine Mining Co., 2–129
classifying, 8–16
conveying, 18–32
crushing, 4–49
filtration, 16–07, 12
flotation, 12–104, 111
grinding, 5–67, 85
guard magnet, 13–35
pumping, 18–82
screening, 7–59
Superfine classifier, 6–26 to 43; 9–36
Superinterstitial particles, 11–05
Superpanner, 19–170
Supervision, facility, 20–41, 43
Surcease mill, flotation, 12–118
Surf washer, 11–104
Surface, measurement, 19–126 to 139; 22–63; *see also Area*
reaction, 19–129; *see also Flotation*
specific, 19–136
Surface tension, 12–41, 43
Surge tank, for ditch-pipe transfer, 20–34
Suspension, *see also Suspensoid processes*
colloidal, 11–106
gaseous, data table, 9–06
properties, 11–106; 19–172
quartz, 11–111, 112
scouring, 11–03
settling velocity in, 11–109
sink-float, 19–172
size of particles, 11–107
slime effects, 11–108
specific weight, 11–106
viscosity, 11–107
zero fluidity, 11–107
Suspensoid processes, 11–106 to 123; *see also Suspension*
circulation of medium, 11–119
clay, 11–111
consistency, 11–107
contamination, 11–109
corrosion, 11–112
critical density, 11–113
definition, 11–03
degradation of media, 11–109
density control, 11–116
ferrosilicon, 11–111, 118, 120
galena, 11–111, 116, 118
hardness of materials, 11–112
laboratory testing, 19–172
loss of medium, 11–117 to 119
magnetite, 11–111
materials for, 11–111, 113
medium density, 11–119, 120 to 123; 19–172
mixed-mineral, 11–112
principles, 11–106
recovery of medium, 11–113, 117
sedimentation, 11–112
self-sustaining, 11–109
size of media, 11–109, 112
specific gravity, 11–111
viscosity, apparent, 11–107
Sutro Coalition mill, 2–127
Suyoc Consolidated Mining Co., 2–108; 4–15; 7–28; 11–69, 133; 12–97, 104
Sweetland, filter, 16–20
filter-thickener, 15–25
Swift & Co., table flotation, 12–83
Swing-hammer crusher, *see Hammer mill*
Sylvanite mill, grinding, 5–12, 13, 39, 79, 83, 91, 92, 118, 119, 124
Sylvite, flotation, 12–14, 125
Symons screen, 7–35

Table flotation, 12–82
agglomeration, 12–83
collectors, 12–18
conditioning, 10–08
conveyor separator, 12–83
definition, 12–01
feed size, 12–02, 83
oiling, 12–83
phosphate, 10–08; 11–78
quantity of reagent, 12–83
screen separation, 12–83
testing, 19–182
Tables, gold, 2–90, 93; 11–101; *see also Sluice*
mathematical, *see Mathematical tables*
shaking, *see Shaking tables*
Tabling, wet, 11–59; *see also Shaking tables*
concentration criterion, 11–84
cost, 2–99, 167, 252
for shape, 11–78, 84
for size, 11–84
in grinding circuits, 2–109; 11–31, 68, 69, 72, 77
ores, *see* specific ores
vs. jigging, 11–70, 73
Tacoma sampling plant, 19–66
Tailing, 1–01, *see also Tailing dams, Tailing disposal*
elevation of, 20–39, 43
for future milling, 20–40
grade, 1–04
impounding, 20–36
pond for water recovery, 20–16
retreatment, 2–68, 186, 194
utilization, 20–40
agricultural, 20–41
brick, 20–41

Tailing, utilization, road metal, 20–41
wheel, 18–91
Tailing dams, 20–36 to 39; *see also* specific mills
dust prevention, 20–38
height, 20–38
labor, 20–37, 38
slope of face, 20–37, 38
water removal, 20–38
Tailing disposal, 20–34; *see also* specific mills, Sec. 2
cars, 20–34
cost, 2–30, 44, 59, 103, 105, 120, 174, 183; 20–36 to 38
gravity flushing, 20–35
impounding, 20–36
in piles, 20–39
power consumption, 2–47; 20–53
Tail-rope haulage, 20–04
Talache Mining Co., 2–98; 14–18, 22, 23; 20–03
Talc, 3–120 to 122
depression, 12–32, 34
flotation, 3–121; 12–16, 22, 26, 34, 128
grinding, 6–03, 05, 25, 26, 42, 43, 46, 49, 54
production, 1–02; 3–121
sawing, 3–122
Talisman Mine, 4–04
Tall oil, 12–13
Talloel, 12–13
ammoniated, 12–45
Tangents, tables, logarithmic, 22–48
natural, 22–36
Tank, pressure in, 20–17
wood, cost and weight, 20–92
Tannin, 12–33; 15–08
Tantalum, 2–220
Tarol, 12–44
Tauber process, 20–74
Teck-Hughes mill, 4–49
Teeter, 8–47
Telechron timer, 19–48
Tell-tale, 5–129; 18–105
Tellurides, differential grinding, **14–23**
Tellurium, 2–222
Tennessee Copper Co., 2–67
bin, 18–16
classifying, 8–09, 32
conveying, 18–32, 36, 47, 49
crushing, 4–74
feeder, 18–101
filtration, 16–13
flotation, 12–95, 106
grinding, 5–18, 20, 35, 42, 47, 50, 51, 56, 112
launders, 18–69
power, 20–53
pumping, 18–82
screening, 7–26
storage, 20–11
thickening, 15–16
Tennessee Mineral Products Corp., 3–27
Tennessee-Schuylkill Corp., 2–118; 12–104
Tennessee Valley Authority, 3–109
Ten-test, 20–45
Terpene, 12–44
Terpineol, 12–44, 46
Testing, air separation, 19–156
amalgamation, 19–187
buddle, 19–172
chemical, 19–94
classification, 19–163 to 166
coal, 19–153
concentration, 19–168 to 185
crushing, 19–95, 100, 162, 163
cyanidation, 19–187
electrical, 19–95
Testing, film sizer, 19–172
filtration, 19–167
flotation, 19–157, 174 to 185
flotation machines, 12–61
flotation reagents, 19–184
for a flowsheet, 19–155 to 162
gravitational, 19–150 to 154
gravity concentration, 19–156
grindability, 19–95 to 99, 163
hand jig, 11–43; 19–169
hand picking, 19–168
heavy-liquid, 19–151 to 154
interpretation, 19–184
laboratory, apparatus, 19–163 to 189
arrangement, 19–186
tests, 19–71 to 189
machines, 19–155
magnetic separation, 19–157, 173
methods, 19–72
optical, 19–72 to 94
pan, 19–169
photographic, 19–85 to 94
processes, 19–154, 157
purposes, 19–71
radioactive tracer atoms, 19–94
resistance to comminution, 19–95
shaking table, 19–171
shape, 19–106, 140, 162
sink-float, 19–150, 156, 172
size, 19–99
sizing; *see* ***Sizing***
sizing-sorting-assay test, 19–157
thickeners, 15–21; 19–166
vanning, 19–171, 172
washability, 19–159
washing, 19–157
Tetrahedrite, depression, 12–30
Tetrahedron, 21–27
Tetrammonium collectors, 12–15, 17, 28, 36, 46
Thallium, formate, 19–152
malonate, 19–152
Thermix dust collector, 9–11
Thermomill, 6–21, 38
Thickeners, 15–11
area, 15–21, 22
attendance, 15–21
capacity, 15–19, 20, 22, 23
centrifugal, 15–12, 26
comparison of, 15–26
cone, *see* ***Cone, thickening***
continuous, 15–12
cost and weight, 20–93
depth, 15–18
design, 15–21
discharge, 15–18
drive mechanism, 15–14
feeding, 15–15
filter, 15–24
intermittent, 15–12
manufacturers, 15–15
operation, 15–18
performance, 15–16
picket-fence, 3A–39
power consumption, 15–21
rake type, 15–14
repairs, 15–21
sizes, 15–15
time-factor, 15–18
Torq, 15–14
traction, 15–15
tray, 15–15, 24
washing in, 15–23
Thickening, 15–04 to 26
concentrate, 15–19

Thickening, consolidation, 15–09
cost, 2–103, 105; 15–21
counter-current decantation, 15–23
critical point, 15–07
definition, 15–01
dilution effect, 15–10
distribution of solids, 15–18
flocculation (*see*)
floor area, 20–48
froth, 15–19
heat, effect of, 15–09
*p*H effect, 3A–39
power consumption, 2–174; 15–21
principles, 15–04
settling curves, 15–07
testing, 19–166
thickeners (*see*)
ultimate density, 15–07
viscosity effect, 15–09
zones of settlement, 15–07
Thioalcohol, 12–10
Thiocarbanilid, 12–10
collecting reaction, 12–05
dispersion, 12–10
in Aerofloat, 12–09
utility, 12–87
wettable, 12–10
Thiocarbazid, diphenyl, 12–10
Thiocarbonates, 12–11, 36
Thiophene, 12–11
Thiophosphates, 12–09
contact angles, 12–07
Thiuram disulphide, 12–11
Thompson-Weinman Co., 3–07
Thoria, 3–87
Thorium, 2–222
Three-halves powers, tables, 22–14
Three-R Mines, 11–28
Tierce, 22–63
Tiff, 3–06
Tigre Milling Co., 15–02
Timber Butter mill, bin, 18–16
classifying, 8–24
grinding, 5–33
hand sorting, 14–06
location of mill, 20–02
ore, 20–02
storage, 20–11
tabling, 11–64
Timber connectors, 18–12
Timing, *see Sampling; Weighers*
Tin, 2–223 to 241
ore, concentration: batea, 11–57
Chinese mills, 2–228
cost, *see* specific mills, Sec. 2
dredging, 2–224 to 226
flotation, 12–16
jigging, 2–224, 225; 11–11 to 13, 16, 24, 29
lode ores, 2–227
panning, 11–56
placer, 2–224
round tables, 11–120
sink-float, 11–122
sluicing, 11–95
tabling, 11–76, 77, 83, 84
vanner treatment, 11–92
price, 2–224
production, 1–02; 2–224
selling, 2–265
treatment, 2–224
uses, 2–223
Tipping-box sampler, cost and weight, 20–91
Titan twin-diaphragm jig, 11–28
Titanium, 2–241
Titanium Products Co., 5–103
Toledo Furnace, 4–86
Ton, 22–65
Ton-Cap screen cloth, 7–12
Tonnage, determination, 19–50 to 53, 54
formulas, 19–201
Tonopah-Belmont mill, 5–19, 23, 91; 8–43; 11–64; 14–05, 06
Tonopah Mining Co., 14–05; 17–05; 18–92
Tooele; *see International M. & S. Co.*
Topaz, sink-float, 11–122
Torq thickener, 15–14
Torricelli's theorem, 20–18
Torus, 21–28
Tough Oakes mill, 5–103
Tourmaline, flotation, 12–128
magnetic separation, 13–19
Towers, dust-collecting, 9–16
Towne and Flinn, patent, 12–03
Tractor, 20–05
Tramming, 20–03, 10
Transite, 20–45
Transmission, electrical, 20–59
mechanical, 20–53 to 55
Transportation, 20–02
cost, 2–263
methods, 18–29; 20–02; *see also* specific methods
ore, 18–29 to 97; 20–02
Trapezoid, 21–21
area, 21–24
Traps, gold, 2–99; 11–104
sluice, 11–99
Treadwell-Yukon Corp., Elsa mill, 2–187; 4–15; 19–55; 20–05
Treasury Mine, 5–23
Trepca Mines, 2–154, 178; 12–105
Trestle, tailing, 20–37, 38
Triangles, 21–20
area, 21–24, 33
equilateral, 21–25
mensuration, 21–24
right, 21–25
similar, 21–21
solutions of, 21–32
Tricone, compartment mill, 6–20
unit mill, 6–22
Trigonometric functions, tables, logarithmic, 22–46 to 49
natural, 22–34 to 37
Trigonometry, 21–28 to 33
Trimble mill, 2–127
Trinity Dredging Co., 2–91, 94
Triplex pump, cost and weight, 20–90
Tripoli, 3–122
grinding, 6–43
production, 1–02; 3–123
Tri-State district, jigging, 11–14
tailing disposal, 20–39
Trommel, 7–28 to 34
cost and weight, 20–92
Trough washer, with hand jigs, 11–45
Trout mill, 13–25
Trucking, cost, 2–116, 202; 3–30
Tschiaturi mill, 2–201; 11–11, 41
T-T mixture, 12–10
Tube length, optical, 19–75
Tube mill, 5–92 to 97; *see also Ball mills; Tumbling mills*
barrel, 5–11
capacity, 5–94, 95
circulating load, 5–98, 99
dry, performance, 6–27, 28, 30, 33, 35, 41
efficiency, 5–96, 125

Tube mill, feed size, 5–95
gold hold-up, 5–104
lost time, 5–97
operation, 5–97
performance, 5–91, 94, 96
power, 5–96
product, 5–93, 95, 108
pulp density, 5–97, 123
reduction ratio, 5–95
speed, 5–97
standard, 5–92
Tubes, Borda's, 20–19
flow through, 20–19
Tul-Mi-Chung mill, canvas table, 11–131; 12–86; 15–19; 17–05; 20–16
Tumbling mills, 5–03; *see also Ball mill; Conical ball mill; Grinding; Pebble mill; Rod mill; Tube mill*
arrangement, 20–47
attendance, 5–126
balanced circuit, 5–101
balancing stages, 5–106
blocking out lining, 5–21
capacity, 5–111, 119
circulating load, 5–99, 102, 128
classification of types, 5–03
classifier capacity, 5–103
closed-circuit operation, 5–97
concentration in circuit, 5–104
construction, 5–14
control, 5–127
critical speed, 5–08
dead load, 5–122
diameter, 5–11
differential grinding, 5–49, 97, 103, 104; 14–23
drive, 5–15
dry grinding, 6–11
efficiency, 5–125
feed rate, 5–98, 101
feed size, 5–108, 109
feeders, 5–130
feeding, 5–15, 102
friction loss, 5–121
height of discharge, 5–13, 110, 122
interstitial filling, 5–103
length, 5–11, 12
liners, *see Liners, tumbling-mill*
lubrication, 5–130
maintenance, 5–129
manufacturers, 5–03
mechanism of tumbling, 5–03
media, 5–26, 121, 129; 6–12
moisture, *see Pulp density*
motion of tumbling bodies, 5–03, 10, 19
operation, 5–97
particle loading, 5–09, 11, 110
paths of tumbling bodies, 5–03, 10
power, 5–12, 111, 120, 125, 128
product, 5–108
pulp temperature, 5–128
reduction of diameter, 5–21
relining, 5–129
selection, 5–120
severity of grind, 5–101
shape, 5–10
size, 5–10, 12
speed, 5–06; *see also* specific mills
starting, 5–121
storage of media, 5–129
time-factor, 5–12, 98, 111, 120
Tungsten, 2–243 to 250
concentrate, grinding, 6–43
ore, concentration, 2–244 to 250
Bolivia, 2–250
Tungsten, ore, flotation, 12–13, 14, 121
hand, 2–250
jigging, 11–11, 46
pneumatic concentration, 11–139
sink-float, 11–120, 122
tabling, 11–84
tungsten ore, selling, 2–266
ores, 2–243
prices, 2–244
production, 1–02; 2–244
treatment, 2–244
uses, 2–243
Tungsten Mines Corp., 4–27; 11–64; 18–70
Turbidimetry, 19–126 to 129
Turbine pump, cost and weight, 20–89
Turbines, steam, 20–63
Turkey red oil, 12–13
Turpentine, 12–44
Twill, 16–03
Two-fifths powers, tables, 22–15
Tybo mill, 2–154; 5–22, 67
Ty-Rod screen, surface, 7–13

Uchi Gold Mines, 5–13; 20–46, 53
UIW (United Iron Works), flotation machine, 12–68
Ultra-wet, 12–14
Umpire sampler, 19–41
Undercurrent, *see Sluice*
Underground mill, 2–107
Ungula, 21–27
Union Potash Co., 3–79
Unit, 2–260
Unit flotation cell, 2–105, 117; 12–66
Unit pulverizer, 6–04, 08, 11, 22
performance, 6–26 to 43
United Comstock mill, building, 20–44 to 46
conveying, 20–50
cost of mill, 20–78
cranes, 20–76
feeders, 18–99
storage, 20–11
United Eastern Mining Co., classifying, 8–43
cost of mill, 20–78
crushing, 4–31
grinding, 5–81
hand sorting, 14–06
sampling, 19–55
thickening, 15–17
United Feldspar & Minerals Co., 3–82
U. S. Coal & Coke Co., 14–05
U. S. Potash Corp., 12–14
U. S. Smelting, Refining & Mining Co., 2–189
classifying, 8–16
crushing, 4–15, 27, 60, 62
dewatering, 15–04
drying, 17–12
filtration, 16–12
flotation, 12–19, 35, 92, 101, 104
grinding, 5–22, 42, 56, 64
jigging, 11–10, 11
launders, 18–76
sampling, 19–45
screening, 7–29
thickening, 15–17, 25
tabling, 11–64, 83
United States Steel Corp., 19–25
United Verde mill, dust collection, 20–75
grinding, 5–57, 97, 105, 118
ore, haulage, 20–04, 06, 07
power, 20–53
water, 20–13
Universal Atlas Cement Co., blending, 3A–12
crushing, 4–83

Universal Atlas Cement Co., grinding, 5–85
Hudson plant, 3A–29
Northampton plant, 3A–34
Universal Zonolite Insulating Co., 13–47
Uranium, 2–250
production, 1–02
Uses of mineral products, 2–11; *see also* specific metals and minerals
Utah Consolidated Mining Co., 18–69
Utah Copper Co., 2–42
blanket tables, 11–133, 134
building, 20–44
classification, 8–08, 09, 27, 32, 33, 49
conveying, 18–36, 39
cranes, 20–76
crushing, 4–50, 51, 64, 94
distributor, 18–106
dust collection, 9–27
elevators, 18–57
feeders, 18–99, 103
filtration, 16–13, 16
flotation, 12–32, 61, 67, 78, 82, 88, 93, 97, 104, 109, 110, 115
grinding, 5–25, 32, 56, 57, 105, 111, 112, 116, 118
guarding primary crusher, 13–35
launders, 18–69, 72, 78
location of mill, 20–01, 02
ore, 20–02
haulage, 20–04
power, 20–53
pumping, 18–82
sampling, 19–46, 48, 55, 71
screening, 7–22, 26, 38, 48
smelter, 1–03
storage, 20–11, 12
tabling, 11–79, 80
tailing disposal, 20–34, 38
thickening, 15–17
Utah feeder, *see Magnetic feeder*
screen, 7–48
Utah Lime & Stone Co., 3–54
Utah Ore Sampling Co., 19–46, 63, 64

Vacuum, production by agitation, 12–76
Vacuum filter, *see also* specific types
cost and weight, 20–86
Vacuum pump, cost and weight, 20–90
Vallecito Mining Co., 2–84
Valley Dolomite Corp., 3–24
Valley Forge Cement Co., 3A–40
blending, 3A–12
burnability curves, 3A–18
Valuation, 21–20
Vanadium, 2–252
ore, flotation, 12–14, 122
grinding, 6–43
Van Mater sampler, 19–45
Vanner, 11–90 to 95
Vanning, 19–171
Vanning jig, 11–43
Vapor pressure, 17–01
V-belt, use, 20–54, 55
V-box, 8–36
Velocity, air flow, 9–21
falling, *see settling*
settling, 8–02 to 05; 9–01 to 05; 11–03; 19–109; *see also Air sizing; Beds; Dust collection; Elutriation; Sink-float separation; Wet classification*
terminal, 8–02; 9–02, 06
Venturi tube, 20–19
Verde Central mill, flotation, 12–58
sampling, 19–55
Vermeuil process, 3–38
Vermiculite, 3–124; 13–47
Vertical-current washer, 11–136
Veta Mines, Inc., Ash Peak mill, 2–130; 12–104
Vezin sampler, 19–39
cost and weight, 20–91
Vibrating screens, 7–36; *see also* specific makes
amplitude, 7–39, 45, 46, 49, 52, 54 to 57, 60
capacity, 7–38, 39, 40, 42, 45, 46, 52 to 54, 63
formulas, 7–63 to 69
changing screens, 7–63; *see also performance*
choice of, 7–70
chutes, 7–62
closed-path, 7–48
cost and weight, 20–92
covering, 7–63
decks, 7–61, 64
direction of vibration, 7–63
Duckworth, 7–38
eccentric-drive types, 7–49
efficiency, 7–38, 39, 61
feeding, 7–62, 68
flexure prevention, 7–60
grips, tension, 7–60
horizontal, 7–63
impact types, 7–38
intensity, 7–37, 62
length, 7–65
life of cover, *see performance*
lubrication, 7–70
magnetic, 7–44
manufacturers, 7–62
motion, 7–37
multideck, capacity, 7–69
open-path, 7–37
operation, 7–62
particle travel, 7–37
performance, 7–38, 41, 42, 45, 47, 48, 51 to 54, 56 to 59
power, 7–39
range, 7–36
reciprocating, 7–37
size, 7–36, 64
slope, 7–38, 39, 45, 46, 48, 50, 52, 54, 56 to 58, 63
speed, 7–38 to 40, 45, 46, 48, 49, 52, 55 to 57
support, 7–61
tension, 7–60, 61
types, 7–37
unbalanced-rotor, 7–55
unbalanced-throw, 7–54
variables, 7–62
vs. classifier, 7–45
vibratory character, 7–49
washing, 7–63; 10–09
width, 7–65
Victor Mica Co., 3–66
Victor Plaster, Inc., 4–38
Vinegar Hill Zinc Co., 2–162
Vipond Porcupine mill, 5–64
Virginia Limestone Corp., 10–16
Viscosity, effect on thickening, 15–09
Vogelstruisbult mill, reef picking, 14–09
Voids, determination, 19–205
Volumes, any solid of revolution, 21–28, 54
Cavalieri's theorem, 21–28
geometrical solids, 21–26 to 28
irregular solid, 21–55
theorems of Pappus, 21–28
Vörlander rule, 12–07
V-tank, 10–11

Wagner turbidimeter, 19–126
Wagon haulage, 20–05, 10

Walker Mining Co., 5–22, 83; 7–29; 12–95; 19–55; 20–09
Walls, at various mills, 20–45
  materials for, 20–45, 69
  retaining, *see Retaining walls*
Warehouse, 20–76
Warren Pipe & Foundry Corp., 2–141; 5–117
Warwick mine, 13–19
Washability, 19–159 to 162
Washers, *see also Scrubber;* specific types of washers
  classifier, 10–10
  cost and weight, 20–93
  Dorr (*see*)
  launder, 10–12
  log, *see Log washer*
  screen, 10–08; *see also Screens*
  tilting-tank, 10–10
  trough, 10–12
Washing, 10–01 to 16
  Britannia M. & S. Co., 2–57
  definition, 10–08
  dredge, 2–89
  grizzly, 2–147
  lead-zinc ore, 2–166
  screen, 3–116; *see also Screens washing*
  sprays, 10–09
Washington Mine, 11–26
Washoe sampling mill, 19–63
Water, clarification, 20–39
  collection, 20–15
  conservation, 20–16
  consumption in milling, *see* descriptions of mills in Secs. 2, 3
  cost, 2–174
  elevation, 20–42, 43
  flow, 20–18, 22
  for evaporation, 20–64
  for flotation, 12–85; 19–180
  gate, pressure on, 20–17
  glass, *see Sodium silicate*
  ground, 20–14
  hammer, 20–28
  -impulse separators, 11–126
  jets, 20–20
  measurement, 20–19
  mine, 20–16
  open channels, 20–31
  pressures, 20–17
  recovery, 2–47; 20–13, 15, 36 to 38
  storage, 20–14
  stream flow, 20–14
  supply, 20–12
    chemical composition, 2–34, 169; 20–16
    cost, 2–44
    domestic, 20–12
    fire, 20–72
    ground water, 20–14
    mains, 20–72
    mill requirements, 12–85; 20–12; *see also* specific mills, Secs. 2, 3; and specific machines
    power consumption, 20–53
    runoff, 20–13
    softening, 12–86
    vs. flowsheet, 2–216
    wells, 20–14
    yield, 20–13
  table, 20–14
  transport, 20–18
  treatment, 20–16
  vapor pressure, 17–02
Watt, equivalents, 22–62
Wave lengths, 9–06
Wedge, 21–28
Weepah Mining Co., 15–17; 16–08; 18–101
Weighers, 19–50 to 53; *see also Scales*
  automatic, 18–105; 19–59 to 52
Weighing; *see also Scales, Weighers*
  approximate methods, 19–52
  wet-pulp tonnage determination, 19–52
Weight, bin-filling, 18–05
  equivalents, 22–63, 64
Weightometer, 19–51
  cost and weight, 20–91
Weinig flotation machine, 12–70
Weir, 20–20 to 22
Weisel, P. J. Co., 3–86; 10–07
Wells, 20–14
Welsch flotation cell, 2–41; 12–60
Wendigo Gold Mines, 11–21; 14–19, 20
West End mill, 5–38, 39; 15–23
West-Land Security Co., 11–78
West Rand Consolidated Mines, 11–43
Western Indiana Gravel Co., 7–32
Weston & Brooker Co., 7–32; 18–25
Weston Coal Co., 11–125
Westvaco Chlorine Products Corp., 3–63
Wet classification, 8–01 to 61
  Castleman function, 8–02
  centrifugal, 8–58; *see also Bird centrifugal classifier*
  character of product, 8–05
  classifiers, *see* specific types
  definition, 8–01
  density control, 8–60
  deslimng cone, 8–42
  eddying resistance, 8–02
  falling velocity, 8–02
  formulas, 8–01 to 03, 35, 42, 47
  free-settling, 8–03 to 05, 43
  hindered-settling, 8–03 to 05, 47
  horizontal-current, 8–05, 35
  hydraulic, *see Hydraulic classifiers*
  launder, 10–12
  laws, 8–01
  mechanical classifiers (*see*)
  Newton's law, 8–02
  purposes, 8–01, 05
  Reynolds' number, 8–02
  sand tanks (*see*)
  settling ratio, 8–05
  settling velocity, 8–01, 04
  shape effect, 8–03, 05
  slime tanks (*see*)
  sphericity factor, 8–03
  Stokes' law, 8–02
  surface-current, 8–42; 10–12
  turbulent resistance, 8–02
  vertical-current, 8–05
  viscous resistance, 8–02
  wall effect, 8–03
  whole-current classifier, 10–11
Wetherbee concentrator, 11–136
Wetting agents, 12–36
Wheel elevator, *see Sand wheel*
Whey, 12–33
Whirlwind classifier, 9–34
White Bird mill, 2–154
White Swan Gold Mines, 2–97
Whitehead Bros. Co., 3–87
Whitewashing, 20–47
Whiting, 3–12
Whiting horizontal-hammer mill, 6–04, 32
Whizzer classifier, 6–27, 31, 36, 37, 39, 40, 42, 43, 51; 9–34
Wilfley pump, *see Centrifugal sand pump*

Wilfley table, 11–62
adjustments, 11–70
capacity, 11–64, 67 to 69
complex ore, 11–69
copper ores, 11–64, 67 to 69
covering, 2–40; 11–63, 64, 66 to 69
double-deck, 11–70
feed size, 11–64, 66, 68, 69
gold ores, 2–101; 11–64, 69
hand, 11–66
lead ores, 11–64, 68, 69
lost time, 11–67, 70
performance, 11–64, 67, 68
power, 11–65, 67 to 69
riffles, 11–63, 64, 67 to 69
slope, 2–40; 11–69
speed, 11–64, 67 to 69
stroke, 11–64, 67 to 69
tungsten ores, 11–64
vs. other machines, 11–70, 73
water, 11–65, 67 to 69
zinc ores, 11–64, 67
Wilfley tilting slimer, 11–132
Williams horizontal-roller mill, 6–07, 26, 28, 35, 36, 38, 40 to 42
Wiluna Gold Mines, 2–105
classifying, 8–33
crushing, 4–49
filtration, 16–08
flotation, 12–105
grinding, 5–67
Wind loads, 20–46
Windows, 20–46
Winnowing, 11–140
Wire, 7–07
Wiring, designing, 20–78
Wisconsin Steel Co., 4–79
Wisconsin Zinc Co., 2–162
Wisconsin zinc district, jigging, 11–16
Witherbee-Sherman & Co., 4–05, 15, 16, 27; 7–24, 13–16 to 18, 22; 14–05, 06; 17–07; 18–18, 20
Witherite, depression, 12–31, 34
Wolf Tongue Mining Co., 2–246; 7–29
Wolframite, flotation, 12–121
grinding, 6–44
magnetic separation, 13–19, 25, 26
Wollastonite, flotation, 12–128
Wood, flotation machine, 12–50
for fuel, 20–64
Woodbury jig, 11–20
copper ore, 2–31, 32; 11–20, 67
for grinding circuit, 11–21
vs. Hancock, 11–40
vs. Harz jig, 11–23, 40
Work equivalents, 22–59
Work of crushing, 5–126; 19–95
Wright-Hargreaves Mines, 2–103
bin, 18–16, 19
building, 20–45
cost of mill, 20–78
distributor, 18–107
filtration, 16–08
flotation, 12–26, 104, 118
grinding, 5–23, 35, 65, 84, 91, 106, 113
pumping, 18–88
sampling, 19–37, 54

Xanthate, 12–07 to 09; *see also* specific xanthates
choice, 12–87
commercial, 12–08
Xanthate, conditioning for, 12–09
contact angles, 12–05, 07
copper, 12–08
film, 12–05
glycol, 12–05
iso, 12–08
phosphate flotation with, 12–09
quantity required, 12–09
solubility, 12–08, 87
synthesis, 12–07
trade names, 12–08
use, *see* flowsheets, Sec. 2
utility, 12–07, 08
Xanthomolybdic acid, 12–09

Yellow Aster mill (Anglo-American Mining Corp), 2–101; 11–31; 19–44, 55; 20–39
Yield, 19–190
Ymir Mine, 18–76
Young Davidson mill, 5–95
Young equation, 12–37
Yttria, 3–87
Yuba Gold Mining Co., 2–90, 91, 93, 94
Yukon Gold Co., 2–92
Yunnan Kotchiu Tin Trading Co., 2–228

Z-reagents, 12–08
Zaruma mill, 4–89, 90
Zeibright Mine, 5–113; 11–26
Zeolite treatment, 12–86
Ziegler picker, 14–09
Zinc, 2–152
-carbonate ores, 2–163
complexing, 12–36
concentrate, assay, 2–154
concentration, 2–153 to 198
cost, 2–155, 162
de-leading, 2–177
flotation, 12–08 to 11
hand jigging, 11–44
jigging, 2–161; 11–09 to 11, 14, 16, 17, 19, 22, 26, 40, 41
labor, 2–155; *see also* specific mills, Sec. 2
power consumption, 2–155; *see also* specific mills, Sec 2
recovery, 2–154
sink-float, 11–114, 118, 122
tabling, 11–64, 67, 69, 71, 72, 79, 82, 83, 86, 88
ion, 12–36
-iron differential flotation, 12–115
-lead ore, concentration, *see* ***Lead-zinc ore***
one-jig zinc mill, 2–161
ore, 2–152
oxide, grinding, 6–43
surface, 19–132
price, 2–153
production, 1–02; 2–153
selling, 2–262
sulphate, 12–36; 20–39
uses, 2–152
Zinc Corporation, 2–173
flotation, 12–75
jigging, 11–17
recovery, 2–154
Zircon, 3–87
concentrate, 3–22
flotation, 12–16, 128
grinding, 6–43
pneumatic concentration, 11–139
Zirconium, 2–253
Zone, 21–27